Foreword

Welcome to the growing group of value–conscious people who drive Toyotas. We are proud of the advanced engineering and quality construction of each vehicle we build.

This Owner’s Manual explains the operation of your new Toyota. Please read it thoroughly and have all the occupants follow the instructions carefully. Doing so will help you enjoy many years of safe and trouble–free motoring. For important information about this manual and your Toyota, read the following pages carefully.

When it comes to service, remember that your Toyota dealer knows your vehicle very well and is interested in your complete satisfaction. Your Toyota dealer will provide quality maintenance and any other assistance you may require.

If there is not a Toyota dealer near you, please call the following number:

U.S. OWNERS:
- When traveling in the U.S. mainland or Canada:
  Toyota Customer Experience Center **Toll–free:1–800–331–4331**
- Hawaii:
  Servco Automotive Customer Services **Toll–free:1–888–272–5515**

CANADIAN OWNERS:
- When traveling in Canada or the U.S. mainland:
  Toyota Canada Customer Interaction Centre **Toll–free:1–888–TOYOTA–8 or 1–888–869–6828**

Please leave this Owner’s Manual in this vehicle at the time of resale. The next owner will need this information also.

All information and specifications in this manual are current at the time of printing. However, because of Toyota’s policy of continual product improvement, we reserve the right to make changes at any time without notice.

Please note that this manual applies to all models and explains all equipment, including options. Therefore, you may find some explanations for equipment not installed on your vehicle.

Please access our websites for further information.

- The U.S. mainland **www.toyota.com**
- Hawaii **www.toyotahawaii.com**
- Canada **www.toyota.ca**

TOYOTA MOTOR CORPORATION

© 2008 TOYOTA MOTOR CORPORATION

All rights reserved. This material may not be reproduced or copied, in whole or in part, without the written permission of Toyota Motor Corporation.

Important information about this manual

Safety and vehicle damage warnings

Throughout this manual, you will see safety and vehicle damage warnings. You must follow these warnings carefully to avoid possible injury or damage.

The types of warnings, what they look like, and how they are used in this manual are explained as follows:

⚠ CAUTION

This is a warning against anything which may cause injury to people if the warning is ignored. You are informed about what you must or must not do in order to reduce the risk of injury to yourself and others.

NOTICE

This is a warning against anything which may cause damage to the vehicle or its equipment if the warning is ignored. You are informed about what you must or must not do in order to avoid or reduce the risk of damage to your vehicle and its equipment.

Safety symbol

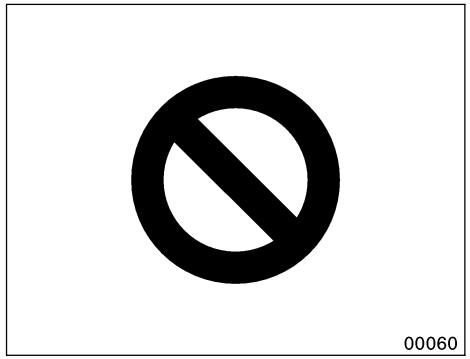

When you see the safety symbol shown above, it means: “Do not...”; “Do not do this”; or “Do not let this happen”.

Important information about your Toyota

Occupant restraint systems

Toyota encourages you and your family to take the time to read Section 1–3 of this Owner’s Manual carefully. In terms of helping you understand how you can receive the maximum benefit of the occupant restraint systems this vehicle provides, Section 1–3 of this Owner’s Manual is the most important Section for you and your family to read.

Section 1–3 describes the function and operation concerning seats, seat belts, SRS airbags and child restraint systems of this vehicle and some potential hazards you should be aware of. These systems work together along with the overall structure of this vehicle in order to provide occupant restraint in the event of a crash. The effect of each system is enhanced when it is used properly and together with other systems. No single occupant restraint system can, by itself, provide you or your family with the equal level of restraint which these systems can provide when used together. That is why it is important for you and your family to understand the purpose and proper use of each of these systems and how they relate to each other.

The purpose of all occupant restraint systems is to help reduce the possibility of death or serious injury in the event of a collision. None of these systems, either individually or together, can ensure that there is no injury in the event of collision. However, the more you know about these systems and how to use them properly, the greater your chances become of surviving an accident without death or serious injury.

Seat belts provide the primary restraint to all occupants of the vehicle, and every occupant of the vehicle should wear seat belts properly at all times. Children should always be secured in child restraint systems that are appropriate for their age and size. SRS (Supplemental Restraint System) airbags are, as their names imply, designed to work with, and be supplemental to, seat belts and are not substitutes for them. SRS airbags can be very effective in reducing the risk of head and chest injuries by preventing contact of the head and chest with interior portions of the vehicle.

In order to be effective, the SRS airbags must deploy with tremendous speed. The rapid deployment of the SRS airbags makes the SRS airbags themselves potential sources of death or serious injury if an occupant is too close to an airbag, or if an object or some part of his or her body has been placed between the occupant and the airbag at the time of deployment. This is just one example of how the instructions in Section 1–3 of this Owner’s Manual will help ensure proper use of the occupant restraint systems, and increase the safety they can provide to you and your family in the event of an accident.

Toyota recommends you to read the provisions in Section 1–3 carefully and refer to them as needed during your time of ownership of this vehicle.

Event data recorder

Your vehicle has computers that monitor and control certain aspects of your vehicle. These computers assist in driving and maintaining optimal vehicle performance. Besides storing data useful for troubleshooting, there is a system to record data in a crash or a near car crash event. This is called an Event Data Recorder (EDR).

The SRS airbag sensor assembly contains the EDR. In a crash or a near car crash event, this device may record some or all of the following information:

- Engine speed
- Whether the brake pedal was applied or not
- Vehicle speed
- To what extent the accelerator pedal was depressed
- Position of the transmission selector lever

- Whether the driver and front passenger wore the seat belts or not
- Driver’s seat position
- Front passenger’s occupant classification
- SRS airbag deployment data
- SRS airbag system diagnostic data

The information above is intended to be used for the purpose of improving vehicle safety performance. Unlike general data recorders, the EDR does not record sound data such as conversation between passengers.

Toyota will not disclose the data recorded in an EDR to a third party except when:

- An agreement from the vehicle’s owner (or the leasing company for a leased vehicle) is obtained
- Officially requested by the police or other authorities
- Used as a defense for Toyota in a law suit
- Ordered by the court

However, if necessary Toyota will:

- Use the data for research on Toyota vehicle safety performance
- Disclose the data to a third party for research purposes without disclosing details of the vehicle owner, and only when it is deemed necessary
- Disclose summarized data cleared of vehicle identification information to a non–Toyota organization for research purposes

New vehicle warranty

Your new vehicle is covered by the following Toyota limited warranties:

- New vehicle warranty
- Emission control systems warranty
- Others

For further information, please refer to the “Owner’s Warranty Information Booklet” or “Owner’s Manual Supplement”.

Your responsibility for maintenance

It is the owner’s responsibility to make sure that the specified maintenance is performed. Section 6 gives details of these maintenance requirements. Also included in Section 6 is general maintenance. For scheduled maintenance information, please refer to the “Scheduled Maintenance Guide” or “Owner’s Manual Supplement”.

Important health and safety information about your Toyota

⚠ CAUTION

- **WARNING: Engine exhaust, some of its constituents, and a wide variety of automobile components contain or emit chemicals known to the State of California to cause cancer and birth defects and other reproductive harm. In addition, oils, fuels and fluids contained in vehicles as well as waste produced by component wear contain or emit chemicals known to the State of California to cause cancer and birth defects or other reproductive harm.**
- **Battery posts, terminals and related accessories contain lead and lead compounds. Wash your hands after handling. Used engine oil contains chemicals that have caused cancer in laboratory animals. Always protect your skin by washing thoroughly with soap and water.**

Accessories, spare parts and modification of your Toyota

A wide variety of non–genuine spare parts and accessories for Toyota vehicles are currently available in the market. You should know that Toyota does not warrant these products and is not responsible for their performance, repair, or replacement, or for any damage they may cause to, or adverse effect they may have on, your Toyota vehicle.

This vehicle should not be modified with non–genuine Toyota products. Modification with non–genuine Toyota products could affect its performance, safety or durability, and may even violate governmental regulations. In addition, damage or performance problems resulting from the modification may not be covered under warranty.

Spark ignition system of your Toyota

The spark ignition system in your Toyota meets all requirements of the Canadian Interference–Causing Equipment Standard.

Installation of a mobile two–way radio system

As the installation of a mobile two–way radio system in your vehicle could affect electronic systems such as follows, be sure to check with your Toyota dealer for precautionary measures or special instructions regarding installation.

- Multiport fuel injection system/sequential multiport fuel injection system
- SRS airbag system
- Seat belt pretensioner system
- Active torque control 4WD system
- Traction control system
- “AUTO LSD” system
- Enhanced vehicle stability control system
- Downhill assist control system
- Hill–start assist control system
- Tire pressure warning system
- Cruise control system
- Anti–lock brake system
- Electronic throttle control system

Tires and loading on your Toyota

Underinflated or overinflated tire pressure and the excess load may result in the deterioration of steering ability and braking ability, leading to an accident. Check the tire inflation pressure periodically and be sure to keep the load limits given in this Owner’s Manual. For details about tire inflation pressure and load limits, see pages 335 and 408.

Scrapping of your Toyota

The SRS airbag and seat belt pretensioner devices in your Toyota contain explosive chemicals. If the vehicle is scrapped with the airbags and pretensioners left as they are, this may cause an accident such as fire. Be sure to have the systems of the SRS airbag and seat belt pretensioner removed and disposed of by the qualified service shop or by your Toyota dealer before you dispose of your vehicle.

Leak detection pump

This pump performs fuel evaporation leakage check. This check is done approximately five hours after the engine is turned off. So you may hear sound coming from under the floor around the driver’s seat for several minutes. It does not indicate a malfunction.

On–pavement and off–road driving tips

This vehicle belongs to the utility vehicle class. Utility vehicles have a significantly higher rollover rate than other types of vehicles. This vehicle will handle and maneuver differently from an ordinary passenger car because it is designed for off–road use also. In addition, this vehicle has a higher ground clearance and center of gravity than that of an ordinary passenger car. This vehicle design feature causes this type of vehicle to be more likely to rollover. Failure to operate this vehicle correctly may result in loss of control, accidents or vehicle rollover causing death or serious injury. Be sure to read “Utility vehicle precautions” on page 308 in Section 2 and “Off–road driving precautions” on page 345 in Section 3.

Perchlorate Material

Special handling may apply,
See www.dtsc.ca.gov/hazardouswaste/perchlorate.

Your vehicle has components that may contain perchlorate. These components may include airbag, seat belt pretensioners, and wireless remote control batteries.

SECTION 1 – 1

OPERATION OF INSTRUMENTS AND CONTROLS

Overview of instruments and controls

Instrument panel overview 2
Steering switches overview 7
Overhead console overview 7
Instrument cluster overview 8
Indicator symbols on the instrument panel 9

Instrument panel overview

▶View A

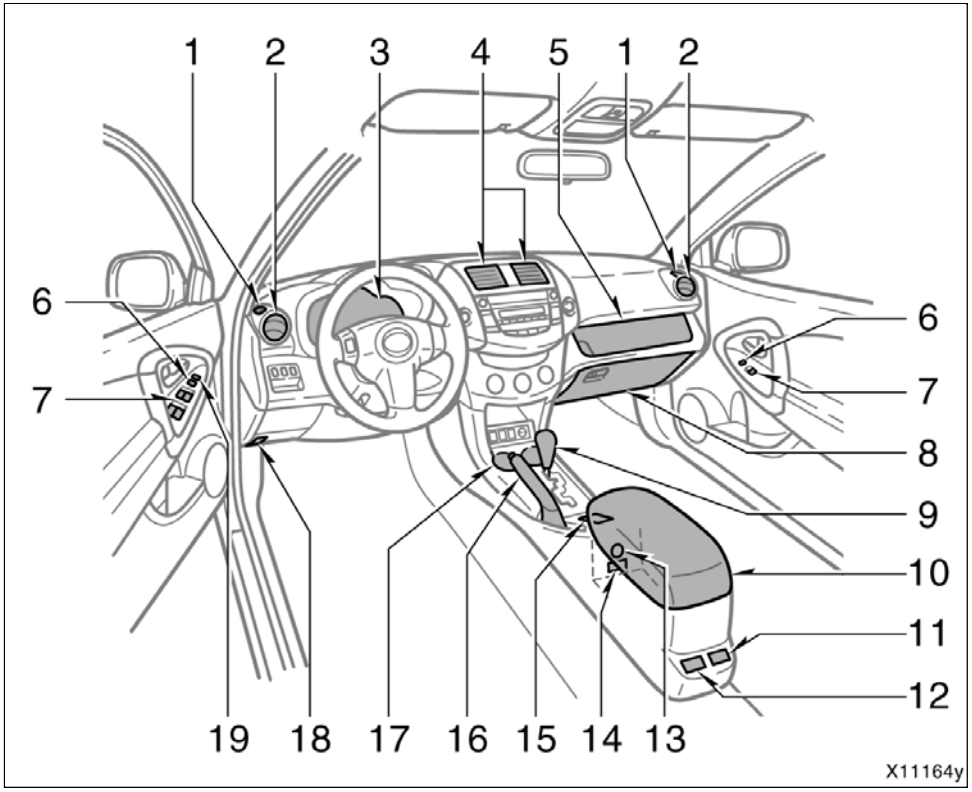

1. Side defroster outlets
2. Side vents
3. Instrument cluster
4. Center vents
5. Auxiliary box
6. Power door lock switches
7. Power window switches
8. Glove box
9. Automatic transmission selector lever
10. Rear console box
11. A/V input adapter
12. Power outlet (115 VAC)
13. Power outlet (12 VDC)
14. AUX adapter
15. Power rear view mirror control switches
16. Parking brake lever
17. Cup holders
18. Hood lock release lever
19. Window lock switch

▶View B (with manual air conditioning system)

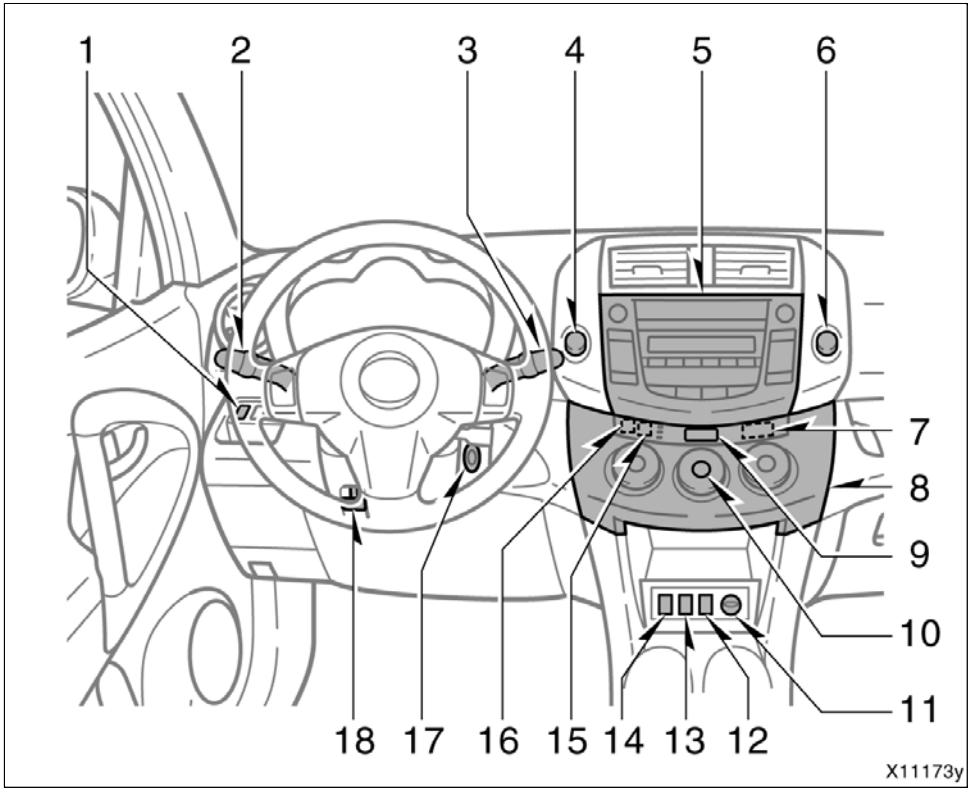

1. Instrument panel light control dial
2. Headlight, turn signal and front fog light switches
3. Wiper and washer switches
4. Four–wheel drive lock switch (four–wheel drive models) or “AUTO LSD” switch (two–wheel drive models)
5. Audio system
6. Emergency flasher switch
7. Front passenger occupant classification indicator light
8. Air conditioning controls
9. Clock display
10. Rear window and outside rear view mirror defogger switch
11. Power outlet
12. Windshield wiper de–icer switch
13. Seat heater switch
14. Downhill assist control switch
15. Front passenger’s seat belt reminder light
16. Engine immobilizer system indicator light

17. Engine switch
18. Tilt and telescopic steering lock release lever

▶View B (with automatic air conditioning system)

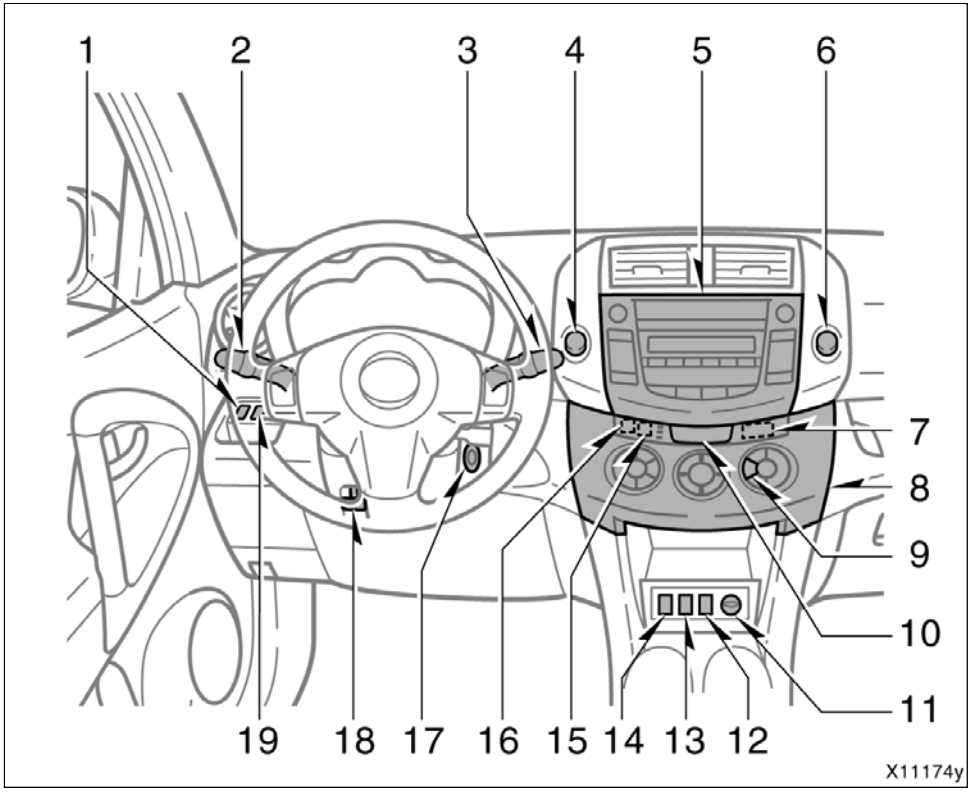

1. Instrument panel light control dial
2. Headlight, turn signal and front fog light switches
3. Wiper and washer switches
4. Four–wheel drive lock switch (four–wheel drive models) or “AUTO LSD” switch (two–wheel drive models)
5. Audio system
6. Emergency flasher switch
7. Front passenger occupant classification indicator light
8. Air conditioning controls
9. Rear window and outside rear view mirror defogger switch
10. Clock and air conditioning display
11. Power outlet
12. Windshield wiper de–icer switch
13. Seat heater switch
14. Downhill assist control switch
15. Front passenger’s seat belt reminder light
16. Engine immobilizer system indicator light

17. Engine switch
18. Tilt and telescopic steering lock release lever
19. Power outlet main switch

Steering switches overview

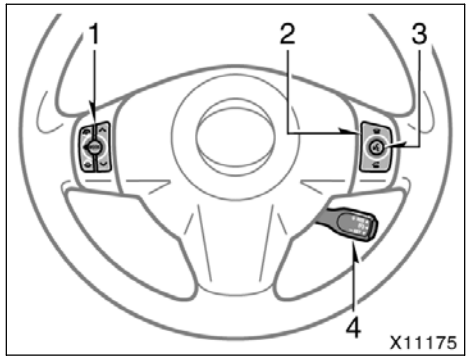

1. Audio remote control switches
2. Telephone switch
3. Speech command switch
4. Cruise control switch

Overhead console overview

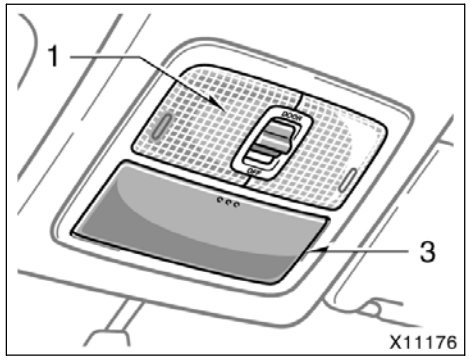

Without electric moon roof

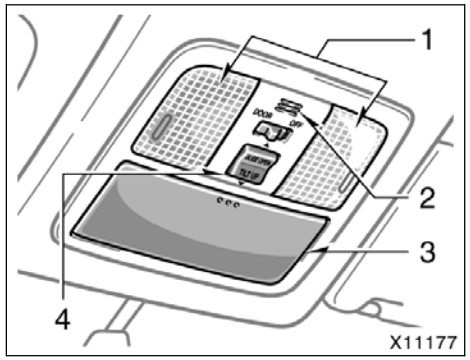

With electric moon roof

1. Front personal lights
2. Microphone
3. Auxiliary box
4. Electric moon roof switch

Instrument cluster overview

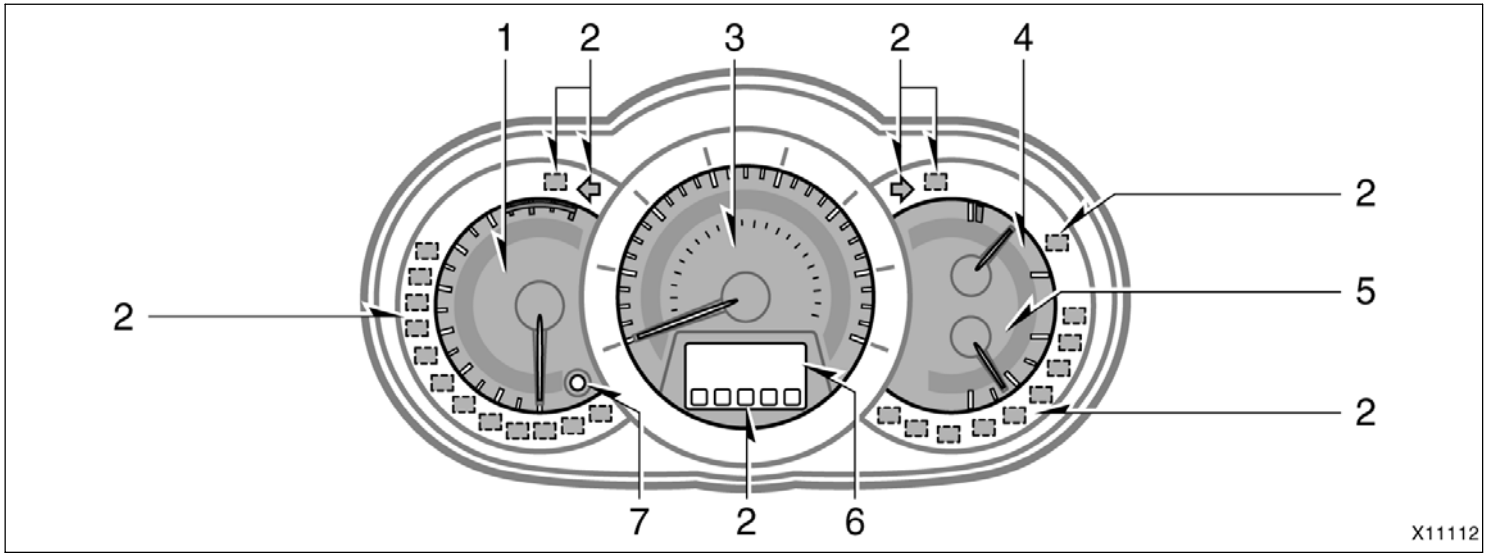

1. Tachometer
2. Service reminder indicators and indicator lights
3. Speedometer
4. Engine coolant temperature gauge
5. Fuel gauge
6. Odometer, two trip meters and outside temperature display
7. Trip meter reset knob

Indicator symbols on the instrument panel

BRAKE or	Brake system warning light*1
	Driver’s seat belt reminder light*1
PASSENGER	Front passenger’s seat belt reminder light*1
	Charging system warning light*1
	Low engine oil pressure warning light*1
CHECK or	Malfunction indicator lamp*1

	Low fuel level warning light*1
ABS or	Anti–lock brake system warning light*1
	Open door warning light*1
	SRS warning light*1
A/T OIL TEMP	Automatic transmission fluid temperature warning light*1
VSC	Enhanced vehicle stability control system/traction control system warning light*1
	Tire pressure warning light*1
4WD	“4WD” warning light*1

P/S	Electric power steering system warning light*1
	Low windshield washer fluid level warning light*1
MAINT REQD	Engine oil replacement reminder light*1
PASSENGER AIR BAG OFF / AIR BAG ON	“AIR BAG ON” and “AIR BAG OFF” indicator lights
	Headlight indicator light
	Tail light indicator light
	Headlight high beam indicator light
	Turn signal indicator lights
	Front fog light indicator light

P R N D 3 2 L	Automatic transmission indicator lights (4–speed)
P R N D 4 3 2 L	Automatic transmission indicator lights (5–speed)
LOCK	Four–wheel drive lock indicator light
	Slip indicator light
AUTO LSD	“AUTO LSD” indicator light
	Downhill assist control system indicator light
CRUISE	Cruise control indicator light*2

*1: For details, see “Service reminder indicators and warning buzzers” on page 129 in Section 1–6.

*2: If this light flashes, see “Cruise control” on page 168 in Section 1–7.

SECTION 1 – 2

OPERATION OF INSTRUMENTS AND CONTROLS

Keys and Doors

Keys 12
Engine immobilizer system 15
Wireless remote control 16
Side doors 22
Power windows 24
Back door 26
Hood 27
Fuel tank cap 28
Electric moon roof 30

Keys (without engine immobilizer system)

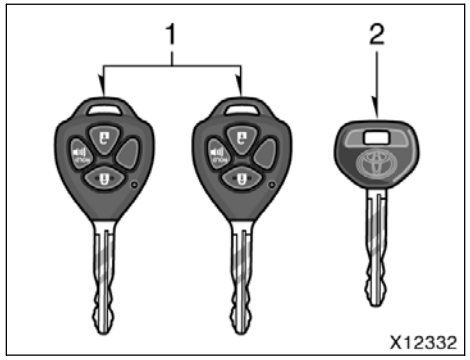

Your vehicle is supplied with two kinds of keys.

1. Master keys—These keys work in every lock.
2. Sub key—This key will not work in the glove box.

To protect items locked in the glove box when using valet parking, leave the sub key with the attendant.

Since the side doors can be locked without a key, you should always carry a spare key in case you accidentally lock your keys inside the vehicle.

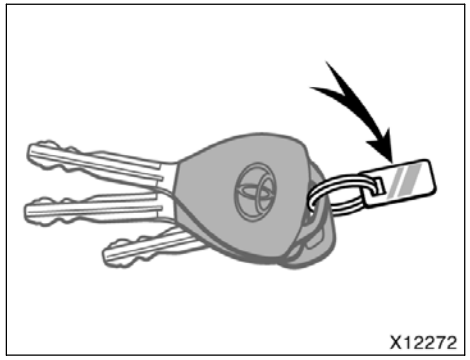

KEY NUMBER PLATE

Your key number is shown on the plate. Keep the plate in a safe place such as your wallet, not in the vehicle.

If you should lose your keys or if you need additional keys, duplicates can be made by a Toyota dealer using the key number.

We recommend writing down the key number and storing it in a safe place.

Keys (with engine immobilizer system)

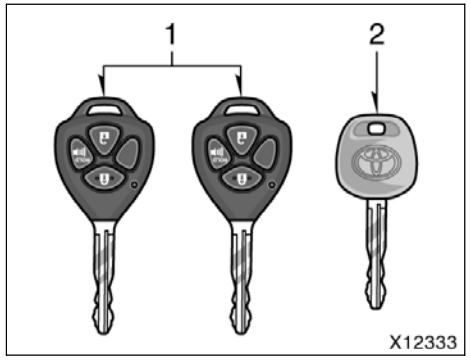

Your vehicle is supplied with two kinds of keys.

1. Master keys—These keys work in every lock. Your Toyota dealer will need one of them to make a new key with a built–in transponder chip.
2. Sub key—This key will not work in the glove box.

A transponder chip for engine immobilizer system has been placed in the head of the master and sub keys. These chips are needed to enable the system to function correctly, so be careful not to lose these keys. If you make your own duplicate key, you will not be able to cancel the system or start the engine.

To protect items locked in the glove box when using valet parking, leave the sub key with the attendant.

Since the side doors can be locked without a key, you should always carry a spare key in case you accidentally lock your keys inside the vehicle.

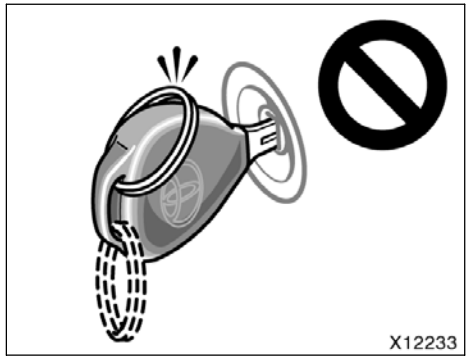

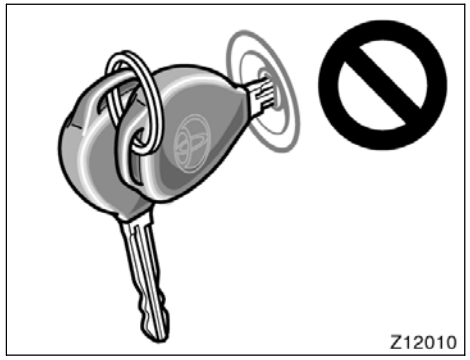

NOTICE

When using a key containing a transponder chip, observe the following precautions:

- ***When starting the engine, do not use the key with a key ring resting on the key grip and do not press the key ring against the key grip. Otherwise the engine may not start, or may stop soon after it starts.***
- ***When starting the engine, do not use the key with other transponder keys around (including keys of other vehicles) and do not press other key plates against the key grip. Otherwise the engine may not start, or may stop soon after it starts. If this happens, remove the key once and then insert it again after removing other transponder keys (including keys of other vehicles) from the ring or while gripping or covering them with your hand to start the engine.***

◆*Do not bend the key grip.*

◆*Do not cover the key grip with any material that cuts off electromagnetic waves.*

◆*Do not knock the key hard against other objects.*

◆*Do not leave the key exposed to high temperatures for a long period, such as on the dashboard and hood under direct sunlight.*

◆*Do not put the key in water or wash it in an ultrasonic washer.*

◆*Do not use the key with electromagnetic materials.*

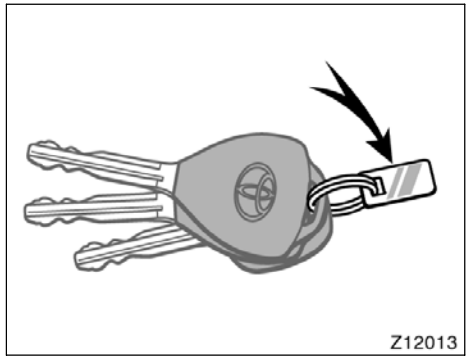

KEY NUMBER PLATE

Your key number is shown on the plate. Keep the plate in a safe place such as your wallet, not in the vehicle.

If you should lose your keys or if you need additional keys, duplicates can be made by a Toyota dealer using the key number.

We recommend writing down the key number and storing it in a safe place.

Engine immobilizer system

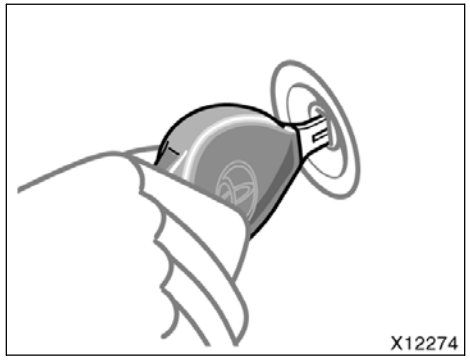

The engine immobilizer system is a theft prevention system. When you insert the key in the engine switch, the transponder chip in the key’s head transmits an electronic code to the vehicle. The engine will start only when the electronic code in the chip corresponds to the registered ID code for the vehicle.

Never leave the keys inside the vehicle when you leave the vehicle.

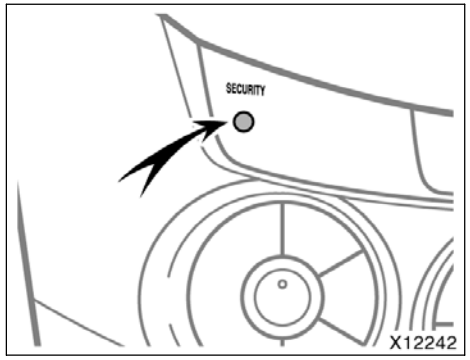

The system is automatically set when the key is removed from the engine switch. The indicator light will start flashing to show the system is set.

In the following cases, contact your Toyota dealer.

- The indicator light stays on.
- The indicator light does not start flashing when the key is removed from the engine switch.
- The indicator light flashes inconsistently.

Inserting the registered key in the engine switch automatically cancels the system, which enables the engine to start. The indicator light will go off.

The system is maintenance–free.

For your Toyota dealer to make you a new key with built–in transponder chip, your dealer will need your key number and master key. However, there is a limit to the number of additional keys your Toyota dealer can make for you.

If you make your own duplicate key, you will not be able to cancel the system or start the engine.

NOTICE
Do not modify, remove or disassemble the engine immobilizer system. If any unauthorized changes or modifications are made, proper operation of the system cannot be guaranteed.

For vehicles sold in U.S.A.

FCC ID: MOZRI–20BTY

This device complies with Part 15 of the FCC Rules. Operation is subject to the following two conditions:

(1) This device may not cause harmful interference, and (2) this device must accept any interference received, including interference that may cause undesired operation.

CAUTION

Changes or modifications not expressly approved by the party responsible for compliance could void the user’s authority to operate the equipment.

For vehicles sold in Canada

This device complies with RSS–210 of industry Canada. Operation is subject to the following two conditions:

(1) This device may not cause interference, and (2) this device must accept any interference, including interference that may cause undesired operation of the device.

Wireless remote control—

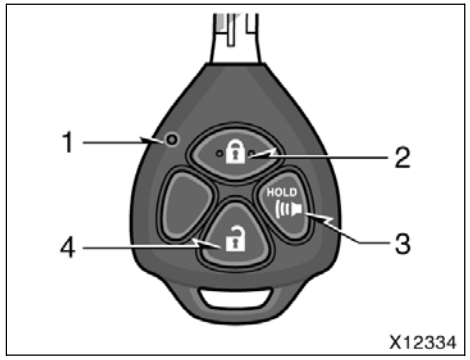

1. Indicator light
2. Lock switch
3. Alarm switch
4. Unlock switch

The wireless remote control system is designed to lock or unlock all the side doors and back door or activate the alarm from a distance within approximately 1 m (3 ft.) of the vehicle.

When you operate any switch, push it slowly and securely. At this time, the indicator light flashes once.

The wireless remote control key is an electronic component. Observe the following instructions in order not to cause damage to the key.

- Do not leave the key in places where the temperature becomes high such as on the dashboard.
- Do not disassemble it.
- Avoid knocking it hard against other objects or dropping it.
- Avoid putting it in water.

You can use up to 3 wireless remote control keys for the same vehicle. Contact your Toyota dealer for detailed information.

If the wireless remote control key does not actuate the side doors and back door or alarm, or operate from a normal distance or the indicator on the key is dimmed or does not come on:

- Check for closeness to a radio transmitter such as a radio station or an airport which can interfere with normal operation of the key.
- The battery may have been consumed. Check the battery in the key. To replace the battery, see “—Replacing battery” on page 20.

If you lose your wireless remote control key, contact your Toyota dealer as soon as possible to avoid the possibility of theft, or an accident. (See “If you lose your keys” on page 379 in Section 4.)

For vehicles sold in U.S.A.

This device complies with Part 15 of the FCC Rules. Operation is subject to the following two conditions:

(1) This device may not cause harmful interference, and (2) this device must accept any interference received, including interference that may cause undesired operation.

NOTICE:
This equipment has been tested and found to comply with the limits for a Class B digital device, pursuant to Part 15 of the FCC Rules. These limits are designed to provide reasonable protection against harmful interference in a residential installation. This equipment generates, uses and can radiate radio frequency energy and, if not installed and used in accordance with the instructions, may cause harmful interference to radio communications. However, there is no guarantee that interference will not occur in a particular installation. If this equipment does cause harmful interference to radio or television reception, which can be determined by turning the equipment off and on, the user is encouraged to try to correct the interference by one or more of the following measures:

- Reorient or relocate the receiving antenna.
- Increase the separation between the equipment and receiver.
- Connect the equipment into an outlet on a circuit different from that to which the receiver is connected.
- Consult the dealer or an experienced radio/TV technician for help.

FCC WARNING:
Changes or modifications not expressly approved by the party responsible for compliance could void the user’s authority to operate the equipment.

For vehicles sold in Canada

NOTE
Operation is subject to the following two conditions:

(1) this device may not cause interference, and (2) this device must accept any interference, including interference that may cause undesired operation of the device.

—Locking and unlocking doors

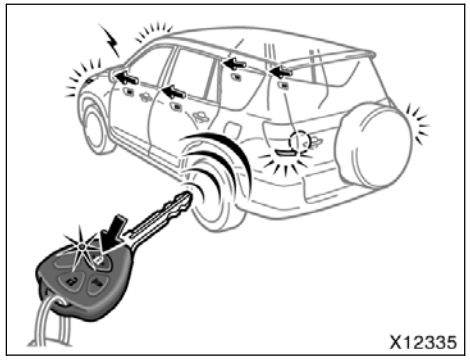

Locking operation

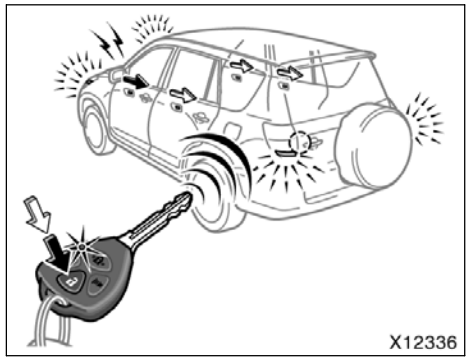

Unlocking operation

To lock and unlock all the doors, push the switches of the key slowly and securely. At this time, the indicator light on the key grip flashes once.

To lock: Push the lock switch. All the side doors and back door are locked simultaneously. At this time one beep will be heard, and the turn signal lights flash once.

Check to see that all the side doors and back door are securely locked.

The beep and flashing turn signal lights can be disabled. For details, contact your Toyota dealer.

If any of the side doors or the back door is not securely closed, locking cannot be performed by the lock switch and a beep will sound continuously for 10 seconds. However, if the key is in the engine switch, a beep will not sound.

To stop the beep, close all the side doors and back door securely or push the unlock switch.

The beep can be disabled. For details, contact your Toyota dealer.

To unlock: Push the unlock switch once to unlock the driver’s door alone. Pushing the switch twice within 3 seconds unlocks all the side doors and back door simultaneously. Each time the unlock switch is pushed, two beeps will be heard, and the turn signal lights flash twice.

This double switch operation to unlock all the side doors and back door can be changed to a single switch operation. For details, contact your Toyota dealer.

When you unlock all the doors using the wireless remote control, the illuminated entry function will be activated. (For further information, see “Illuminated entry system” on page 119 in Section 1–5.)

You have 30 seconds to open a door after using the wireless remote unlock feature. If a door is not opened by then, all the side doors and back door will be automatically locked again.

The time before automatic door lock function can be changed. For details, contact your Toyota dealer.

If the lock or unlock switch is kept pressed in, the locking or unlocking operation is not repeated. Release the switch and then push again.

—Activating alarm

Pushing the alarm switch blows the horn intermittently and flashes the headlights, tail lights and turn signal lights and turns on the interior and personal lights.

The alarm switch is used to deter vehicle theft when you witness anyone attempting to break into or damage your vehicle.

The alarm will last for one minute. To stop alarm midway, push any of the switch on the key. You can also stop the alarm by turning the engine switch from the “LOCK” to the “ON” position.

The alarm function does not work when the engine switch is in the “ON” position.

This alarm function can be disabled. For details, contact your Toyota dealer.

—Replacing battery

For replacement, use a CR2016 lithium battery or equivalent.

⚠ CAUTION

Special care should be taken to prevent small children from swallowing the removed battery or components.

NOTICE

- ***When replacing the battery, be careful not to lose the components.***
- ***Replace only with the same or equivalent type recommended by a Toyota dealer.***
- ***Dispose of used batteries according to the local laws.***

Replace the battery by following these procedures:

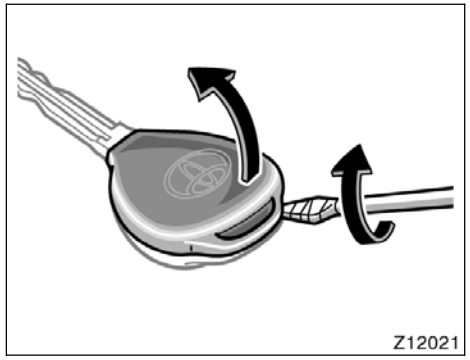

1. Open the cover using a flathead screwdriver wrapped with plastic tape.

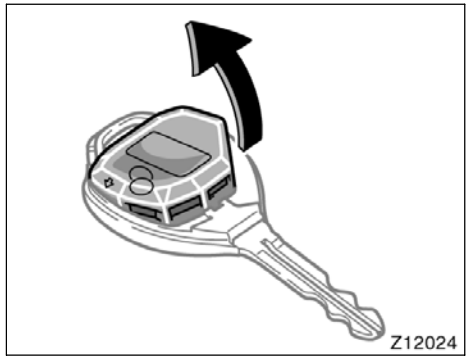

2. Remove the module from the key frame.

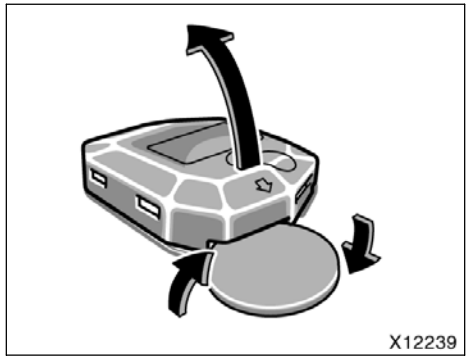

3. Open and remove the battery case cover using a coin.

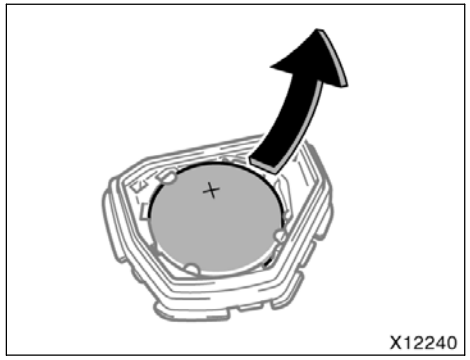

4. Take out the discharged battery and put in a new battery with the positive (+) side up.
5. Install the battery case cover and then install the module into the key frame. Close the cover.
6. When pushing either switch on the wireless key, make sure the indicator light comes on.

NOTICE

- ***Do not bend the terminals.***
- ***Make sure the positive side and negative side of the battery are faced correctly.***
- ***Do not replace the battery with wet hands. Water may cause unexpected rust.***
- ***Do not touch or move any components inside the transmitter, or it may interfere with proper operation.***
- ***Be careful not to bend the electrode when inserting the battery and that dust or oils do not adhere to the battery case.***
- ***Close the battery case securely.***

After replacing the battery, check that the key operates properly. If the key still does not operate properly, contact your Toyota dealer.

Side doors

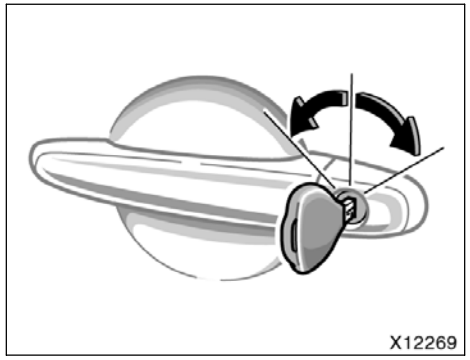

LOCKING AND UNLOCKING WITH KEY

Insert the key into the keyhole and turn it.

To lock: Turn the key forward.
To unlock: Turn the key backward.

All the side doors and back door lock and unlock simultaneously with driver’s door. In the driver’s door lock, turning the key once will unlock the driver’s door and twice in succession will unlock all the side doors and back door simultaneously.

When the driver’s door is unlocked using the key, the illuminated entry system will be activated. (For further information, see “Illuminated entry system” on page 119 in Section 1–5.)

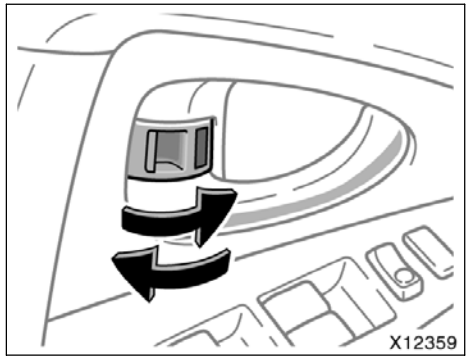

LOCKING AND UNLOCKING WITH INSIDE LOCK KNOB

Move the lock knob.

To lock: Push the knob forward.
To unlock: Pull the knob backward.

The front doors can be opened by pulling the inside handle even if the lock knobs are in the locked position.

⚠ CAUTION

Do not pull the inside handle of the doors while driving. The doors will open and an accident may occur. Toyota strongly recommends that all children be placed in the rear seat of the vehicle.

Closing the door with the lock knob in the lock position will also lock the door. Be careful not to lock your keys in the vehicle.

Doors cannot be locked if you leave the key in the engine switch.

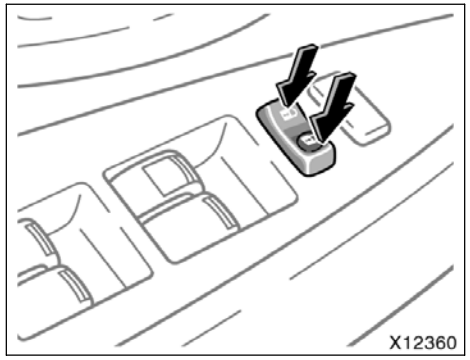

Driver’s side

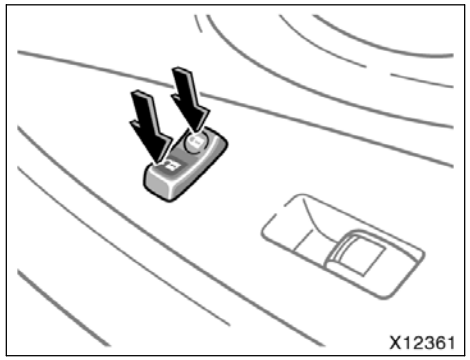

Front passenger’s side

LOCKING AND UNLOCKING WITH POWER DOOR LOCK SWITCH

Push the switch.

To lock: Push the switch down on the right side.
To unlock: Push the switch down on the left side.

Operating the switch simultaneously locks or unlocks all the side doors and back door.

If you do either of the following, no door can be unlocked with the power door lock switch.

- Lock all the doors with the key or wireless remote control when all the doors are closed.
- Open the driver’s door and move the inside lock knobs to the lock position, then close the door.

The power door lock switch can be reset in the following ways.

- Turn the engine switch to the “ON” position.
- Unlock all the doors with the key or wireless remote control.
- Unlock the driver’s door with the inside lock knob, and then unlock all the doors with the power door lock switch.

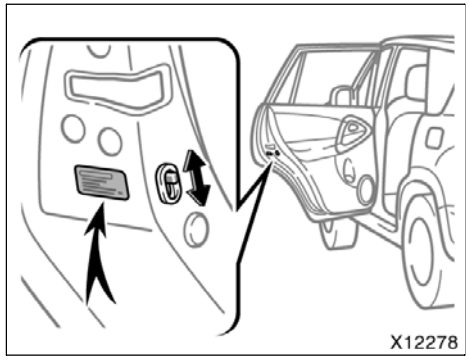

REAR DOOR CHILD–PROTECTORS

Move the lock lever to the “LOCK” position as shown on the label.

When the child–protector is locked, you cannot open the rear door by the inside door handle. We recommend using this feature whenever small children are in the vehicle.

⚠ CAUTION

Before driving, be sure that the doors are closed and locked, especially when small children are in the vehicle. Along with the proper use of seat belts, locking the doors helps prevent the driver and passengers from being thrown out from the vehicle in an accident. It also helps prevent the doors from being opened unintentionally.

Power windows

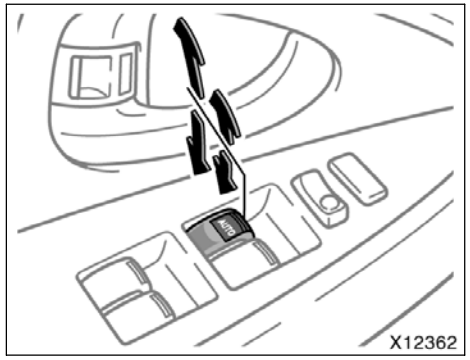

The windows can be operated with the switch on each door. The passengers’ windows can also be controlled by the switches on the driver’s door.

The power windows work when the engine switch is in the “ON” position.

Key off operation: If the either front door is closed, they work for 45 seconds even after the engine switch is turned off. They stop working when the either front door is opened.

OPERATING THE DRIVER’S WINDOW

Use the switch on the driver’s door.

Normal operation: The window moves as long as you hold the switch.

To open: Lightly push down the switch.
To close: Lightly pull up the switch.

Automatic operation: Push the switch completely down or pull it completely up, and then release it. The window will fully open or close. To stop the window partway, lightly move the switch in the opposite direction and then release it.

Jam protection function: During automatic closing operation, the window stops and opens half way if something gets caught between the window and window frame.

If the window receives a strong impact, this function may work even if nothing is caught.

If the power window does not operate automatically or the jam protection function does not operate correctly, you should normalize the power window.

To normalize the power window:

1. Push down the power window switch and lower the windows fully.
2. Pull up the switch until the windows close and hold the switch for a second.

Make sure that the window open and close automatically. If the power windows cannot be operated properly, have it checked by your Toyota dealer.

⚠ CAUTION

- **Never try jamming any part of your body to activate the jam protection function intentionally, as it could result in a death or serious injury.**
- **The jam protection function may not work if something gets caught just before the window is fully closed.**

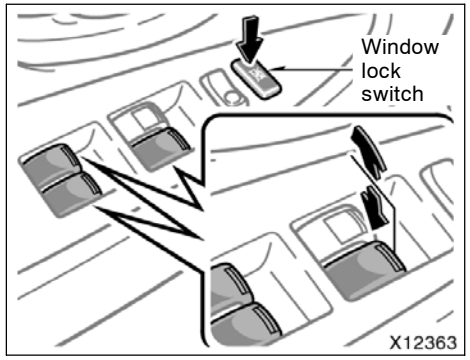

OPERATING THE PASSENGERS’ WINDOWS

Use the switch on each passenger’s door or the switches on the driver’s door that control each passenger’s window.

The window moves as long as you hold the switch.

To open: Push down the switch.
To close: Pull up the switch.

If you push in the window lock switch on the driver’s door, the passengers’ windows cannot be operated.

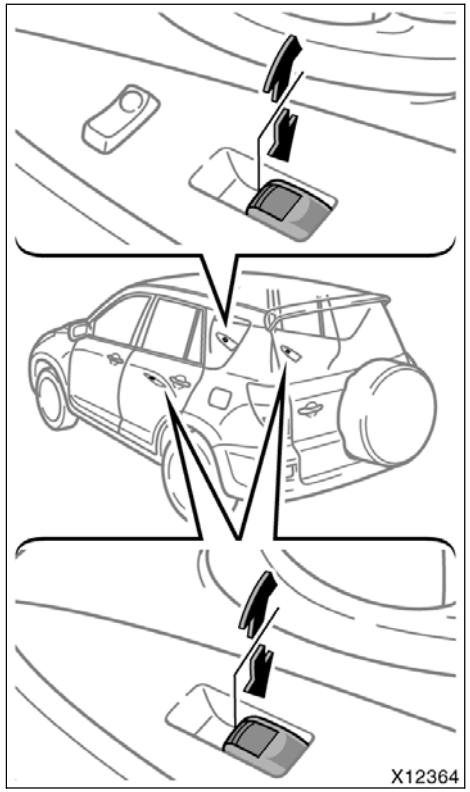

⚠ CAUTION

To avoid death or serious personal injury, you must do the following.

- **Before you close the power windows, always make sure there is nobody around the power windows. You must also make sure the heads, hands and other parts of the bodies of all occupants are kept completely inside the vehicle. If someone’s neck, head or hands get caught in a closing window, it could result in death or serious injury. When anyone closes the power windows, make sure he or she operates the windows safely.**
- **When small children are in the vehicle, never let them use the power window switches without supervision. Use the window lock switch to prevent them from making unexpected use of the switches.**
- **Be sure to remove the key when you leave your vehicle.**

- **Never leave anyone (particularly a small child) alone in your vehicle, especially with the key still inserted. Otherwise, he/she could use the power window switches and get trapped in a window. Unattended person (particularly a small child) can be involved in a serious accident.**

Back door

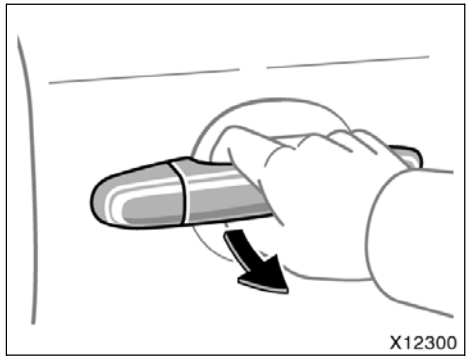

To open the back door, pull the handle.

All the side doors and back door lock and unlock simultaneously with the driver’s door.

Operating the power door lock switch or wireless remote control key simultaneously locks or unlocks the back door. (See “—Locking and unlocking doors” on page 18 and “Side doors” on page 22 in this Section.)

When closing the back door, make sure it is fully closed.

See “—Stowage precautions” on page 336 in Section 2 for precautions when loading luggage.

CAUTION

- Keep the back door closed while driving. This not only keeps the luggage from being thrown out but also prevents exhaust gases from entering the vehicle.
- If the open back door hides the stop, tail or rear turn signal lights while you are parked, other road users must be warned of the presence of your vehicle by a warning triangle or other device.

Hood

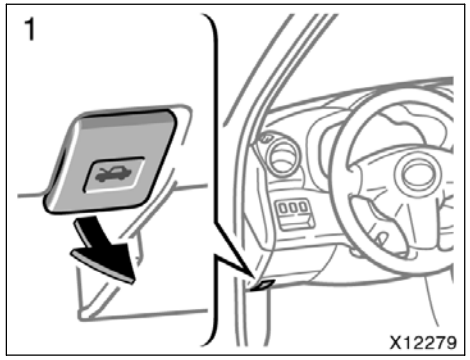

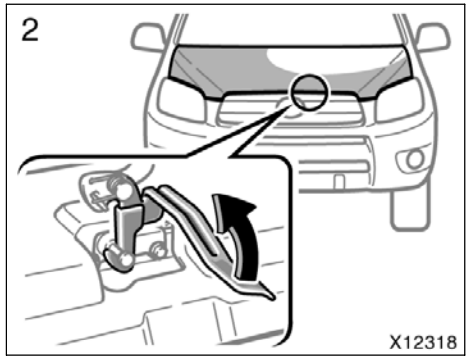

To open the hood:

1. Pull the hood lock release lever. The hood will spring up slightly.

CAUTION

Before driving, be sure that the hood is closed and securely locked. Otherwise, the hood may open unexpectedly while driving and an accident may occur.

2. In front of the vehicle, pull up the auxiliary catch lever and lift the hood.

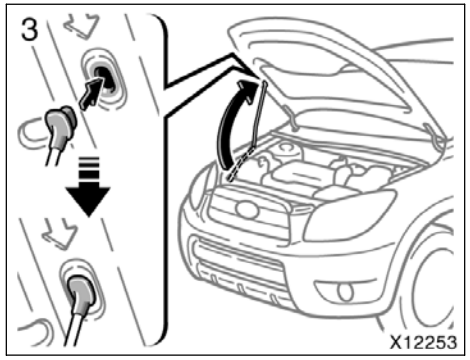

3. Hold the hood open by inserting the support rod into the slot.

To insert the support rod into the slot, move it straight up. If it is moved to the side or toward the inside of the vehicle, it may become detached.

Before closing the hood, check to see that you have not forgotten any tools, rags, etc. and return the support rod to its clip—this prevents rattles. Then lower the hood and make sure it locks into place. If necessary, press down gently on the front edge to lock it.

⚠ CAUTION

After inserting the support rod into the slot, make sure the rod supports the hood securely from falling down on to your head or body.

NOTICE

Be sure to return the support rod to its clip before closing the hood. Closing the hood with the support rod up could cause the hood to bend.

Fuel tank cap

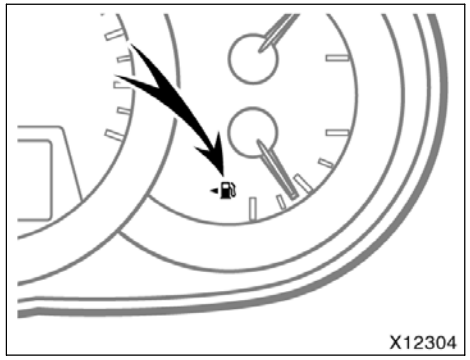

This indicates that the fuel filler door is on the left side of your vehicle.

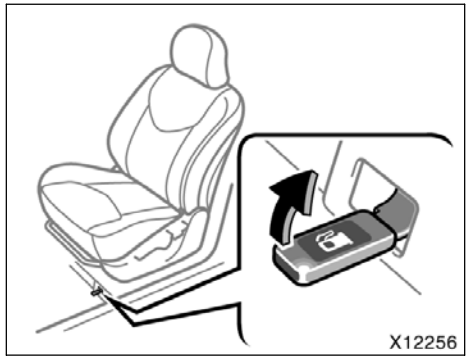

1. **To open the fuel filler door, pull the lever up.**

   When refueling, turn off the engine.

⚠ CAUTION

- **Do not smoke, cause sparks or allow open flames when refueling. The fumes are flammable.**
- **When opening the cap, do not remove the cap quickly. In hot weather, fuel under pressure could cause injury by spraying out of the filler neck if the cap is suddenly removed.**

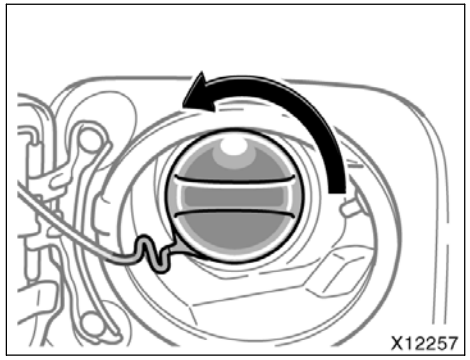

2. **To remove the fuel tank cap, turn the cap counterclockwise. Pause slightly before removing it.**

It is not unusual to hear a slight swoosh when the cap is opened.

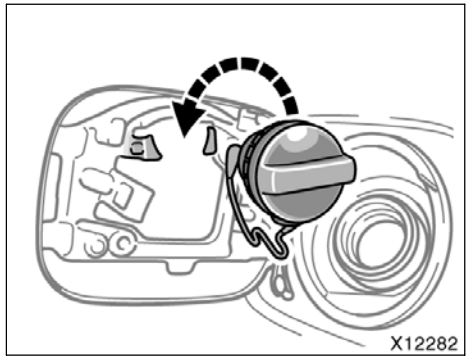

3. **The removed cap can be hanged on the cap hanger.**

When installing the cap, turn it clockwise until one click is heard, in order to fully close it. The cap returns slightly when your hand is released from the cap after closure, however this does not cause any problems.

If the cap is not tightened securely, the malfunction indicator lamp comes on. Make sure the cap is tightened securely.

The indicator lamp goes off after driving several times. If the indicator lamp does not go off, contact your Toyota dealer as soon as possible.

⚠ CAUTION

- **Make sure the cap is tightened securely to prevent fuel spillage in the event of an accident.**
- **Use only a genuine Toyota fuel tank cap for replacement. It is designed to regulate fuel tank pressure.**

NOTICE

To prevent damage to the cap, apply force only in the turning direction to the cap. Do not pull or pry it.

Electric moon roof

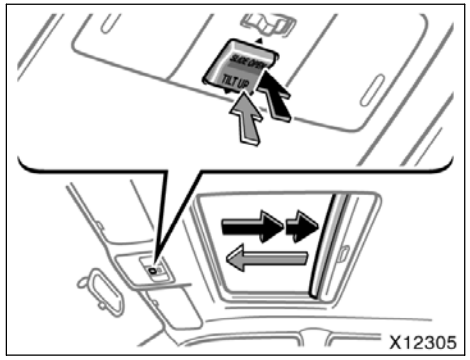

Sliding operation

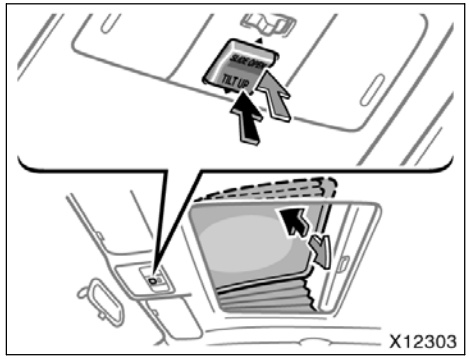

Tilting operation

To operate the moon roof, use the switch on the overhead console.

The engine switch must be in the “ON” position.

The sun shade can be opened or closed by hand.

Automatic sliding operation—

To open: Push the switch on the “SLIDE OPEN” side.

The roof will open and stop partway 50 mm (2.0 in.) from the fully opened position. When you push the “SLIDE OPEN” side again, the moon roof will open fully. To stop the roof partway, push the switch on either the “SLIDE OPEN” or “TILT UP” side briefly.

As driving with the moon roof opened fully will cause wind throbs, we recommend you to drive with the moon roof partway 50 mm (2.0 in.) from the fully opened position.

The sun shade will be opened together with the roof.

To close: Push the switch on the “TILT UP” side.

The roof will fully close automatically. To stop the roof partway, push the switch on either the “SLIDE OPEN” or “TILT UP” side briefly.

Manual sliding operation—

To open the moon roof slightly, quickly push and release the switch on the “SLIDE OPEN” side.

To close the moon roof slightly, quickly push and release the switch on the “TILT UP” side.

Automatic tilting operation—

To tilt up: Push the switch on the “TILT UP” side.

To tilt down: Push the switch on the “SLIDE OPEN” side.

The roof will fully tilt up or down automatically. To stop the roof partway, push the switch on either the “SLIDE OPEN” or “TILT UP” side briefly.

Manual tilting operation—

To tilt up the moon roof slightly, quickly push and release the switch on the “TILT UP” side.

To tilt down the moon roof slightly, quickly push and release the switch on the “SLIDE OPEN” side.

Key off operation: The moon roof works for 45 seconds even after the engine switch is turned off. It stops working when either front door is opened.

Jam protection function: If something gets caught between the moon roof and frame during closing operation, the moon roof stops and opens half way.

If the moon roof receives a strong impact, this function may work even if nothing is caught.

If the moon roof does not operate automatically or the jam protection function does not operate correctly, you should normalize the moon roof.

To normalize the moon roof, push and hold the moon roof switch on the “TILT UP” side until the roof fully tilts up. Then release the switch. Push and hold the switch on the “TILT UP” side until the moon roof tilts up, tilts down, slides open and then closes automatically.

Make sure that the moon roof opens and closes automatically. If the moon roof cannot be operated properly, have it checked by your Toyota dealer.

⚠ CAUTION

To avoid death or serious personal injury, you must do the following:

- **While the vehicle is moving, always keep the heads, hands and other parts of the bodies of all occupants away from the roof opening. Failure to do so may result in death or serious injury if the vehicle stops suddenly or if the vehicle is involved in an accident.**
- **Before you close the moon roof, always make sure there is nobody around the moon roof. You must also make sure nobody places his or her head, hands and other parts of the body in the roof opening. If someone’s neck, head or hands get caught in the closing roof, it could result in death or serious injury. When anyone closes the moon roof, first make sure it is safe to do so.**

- **Be sure to remove the key when you leave your vehicle.**
- **Never leave anyone (particularly a small child) alone in your vehicle, especially with the key still inserted. Otherwise, he/she could use the moon roof switch and get trapped in the roof opening. Unattended person (particularly a small child) can be involved in a serious accident.**
- **Never sit on top of the vehicle around the roof opening.**
- **Never try jamming any part of your body to activate the jam protection function intentionally, as it could result in a death or serious injury.**
- **The jam protection function may not work if something gets caught just before the moon roof is fully closed.**

SECTION 1 – 3

OPERATION OF INSTRUMENTS AND CONTROLS

Occupant restraint systems

Seats 34
Front seats 34
Flattening front seatbacks 38
Rear seats 41
Armrest 51
Head restraints 51
Seat heaters 52
Seat belts 53
SRS airbags 65
Child restraint 85

Seats

While the vehicle is being driven, all vehicle occupants should have the seatback upright, sit well back in the seat and properly wear the seat belts provided.

CAUTION

- **Do not drive the vehicle unless the occupants are properly seated. Do not allow any passengers to sit on top of a folded–down seatback, or in the luggage compartment or cargo area. Persons not properly seated and/or not properly restrained by seat belts can be killed or severely injured in the event of emergency braking or a collision.**
- **During driving, do not allow any passengers to stand up or move around between seats. Otherwise, death or severe injuries can occur in the event of emergency braking or a collision.**

Front seats—
—Front seat precautions

Driver seat

CAUTION

The SRS driver airbag deploys with considerable force, and can cause death or serious injury especially if the driver is very close to the airbag. The National Highway Traffic Safety Administration (“NHTSA”) advises:

Since the risk zone for driver airbag is the first 50—75 mm (2—3 in.) of inflation, placing yourself 250 mm (10 in.) from your driver airbag provides you with a clear margin of safety. This distance is measured from the center of the steering wheel to your breastbone. If you sit less than 250 mm (10 in.) away now, you can change your driving position in several ways:

- **Move your seat to the rear as far as you can while still reaching the pedals comfortably.**
- **Slightly recline the back of the seat. Although vehicle designs vary, many drivers can achieve the 250 mm (10 in.) distance, even with the driver seat all the way forward, simply by reclining the back of the seat somewhat. If reclining the back of your seat makes it hard to see the road, raise yourself by using a firm, non–slippery cushion, or raise the seat if your vehicle has that feature.**
- **If your steering wheel is adjustable, tilt it downward. This points the airbag toward your chest instead of your head and neck.**

The seat should be adjusted as recommended by NHTSA above, while still maintaining control of the foot pedals, steering wheel, and your view of the instrument panel controls.

Front passenger seat

CAUTION

The SRS front passenger airbag also deploys with considerable force, and can cause death or serious injury especially if the front passenger is very close to the airbag. The front passenger seat should be as far from the airbag as possible with the seatback adjusted, so the front passenger sits upright.

Front seats (with SRS side airbags)

CAUTION

The SRS side airbags are installed in the driver and front passenger seats. Observe the following precautions.

- **Do not lean against the front door when the vehicle is in use, since the side airbag inflates with considerable speed and force. Otherwise, you may be killed or seriously injured.**
- **Do not use seat accessories which cover the area where the side airbags inflate. Such accessories may prevent the side airbags from activating correctly, causing death or serious injury.**
- **Do not modify or replace the seats or upholstery of the seats with side airbags. Such change may prevent the side airbag system from activating correctly, disable the system or cause the side airbags to inflate accidentally, resulting in death or serious injury.**

—Seat adjustment precautions

CAUTION

- **Do not adjust the seat while the vehicle is moving as the seat may unexpectedly move and cause the driver to lose control of the vehicle.**
- **Be careful that the seat does not hit a passenger or luggage.**
- **After adjusting the seat position, try sliding it forward and backward to make sure it is locked in position.**
- **After adjusting the seatback, push your body back against the seat to make sure the seat is locked in position.**
- **Do not put objects under the seats. Otherwise, the objects may interfere with the seat–lock mechanism or unexpectedly push up the seat position adjusting lever and the seat may suddenly move, causing the driver to lose control of the vehicle.**
- **While adjusting the seat, do not put your hands under the seat or near the moving parts. Otherwise, your hands or fingers may be caught and injured.**

—Adjusting front seats (manual seat)

Driver’s seat

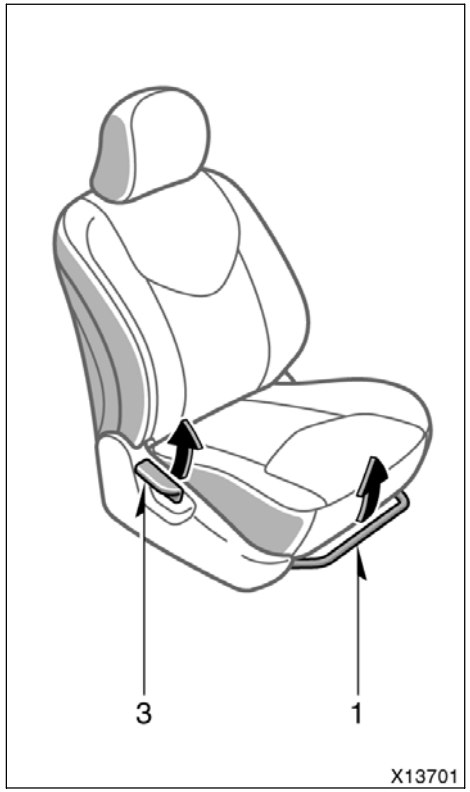

Passenger’s seat

1. SEAT POSITION ADJUSTING LEVER

Hold the center of the lever and pull it up. Then slide the seat to the desired position with slight body pressure and release the lever.

2. SEAT HEIGHT ADJUSTING LEVER

Pull up or push down the lever.

3. SEATBACK ANGLE ADJUSTING LEVER

Lean forward and pull the lever up. Then lean back to the desired angle and release the lever.

⚠ CAUTION

Avoid reclining the seatback any more than needed. The seat belts provide maximum protection in a frontal or rear collision when the driver and the front passenger are sitting up straight and well back in the seats. If you are reclined, the lap belt may slide past your hips and apply restraint forces directly to the abdomen or your neck may contact the shoulder belt. In the event of a frontal collision, the more the seat is reclined, the greater the risk of death or serious injury.

—Adjusting front seats (power seat)

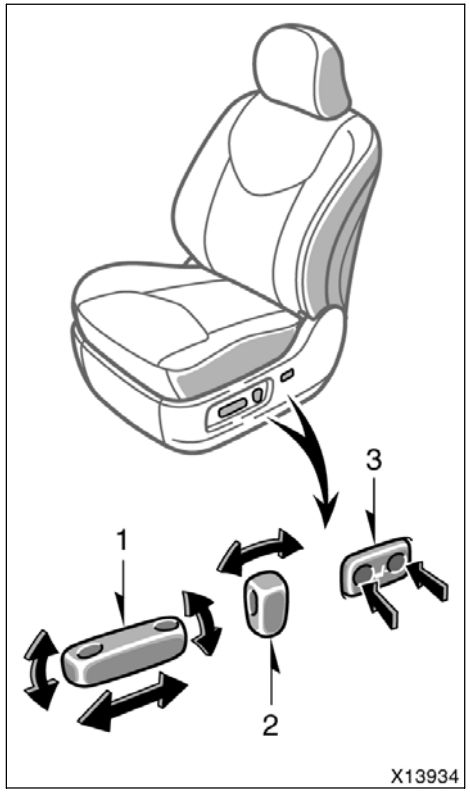

1. **SEAT POSITION, SEAT CUSHION ANGLE AND SEAT HEIGHT ADJUSTING SWITCH**

Move the control switch in the desired direction.

Releasing the switch will stop the seat at that position.

Do not place anything under the front seats, as this might interfere with the seat movement.

2. **SEATBACK ANGLE ADJUSTING SWITCH**

Move the control switch in the desired direction.

Releasing the switch will stop the seatback at that position.

CAUTION

Avoid reclining the seatback any more than needed. The seat belts provide maximum protection in a frontal or rear collision when the driver and the front passenger are sitting up straight and well back in the seats. If you are reclined, the lap belt may slide past your hips and apply restraint forces directly to the abdomen or your neck may contact the shoulder belt. In the event of a frontal collision, the more the seat is reclined, the greater the risk of death or serious injury.

3. SEAT LUMBAR SUPPORT ADJUSTING SWITCH

Push the control switch on either side.

The amount of lumbar support will change while the switch is pushed.

Flattening front seatbacks (manual seat)

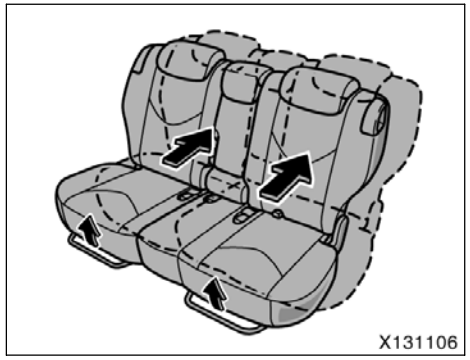

1. Hold the center of the lever and pull it up. Then slide the rear/second seats fully backward and pull it forward slightly until it locks.

2. Remove the front head restraint. Hold the center of the lever and pull it up. Then slide the front seat further forward than the front–most lock position.

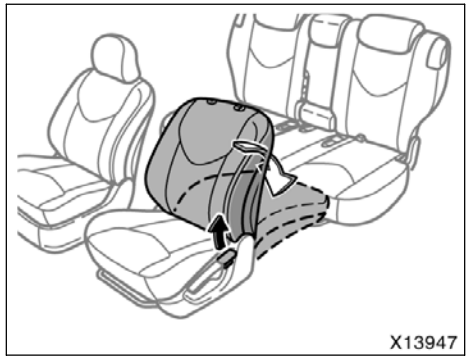

3. Pull the seatback angle adjusting lever up to unlock and push down the seatback.

When returning the seatback to the upright position, be careful not to make yourself hit by the seatback which will bound with considerable spring force.

After returning the seat to its original position, be certain to replace the head restraint.

CAUTION

- Do not allow passengers to ride on the flattened seat while driving; use the seat in the normal position.
- After returning the seat to its original position, try pushing the seat and seatback forward and rearward to make sure it is secured in place. Be certain to replace head restraint.

—Flattening front seatbacks (power seat)

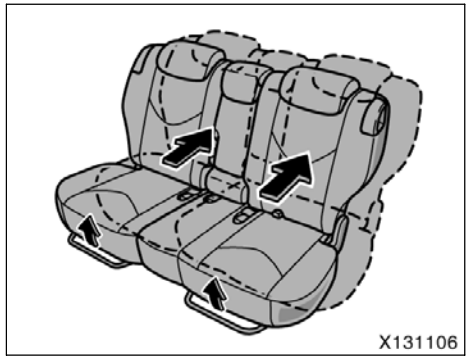

1. Hold the center of the lever and pull it up. Then slide the rear/second seats fully backward and pull it forward slightly until it locks.

2. Remove the front head restraint. Push the seat position adjusting switch forward to slide the seat to the front–most position.

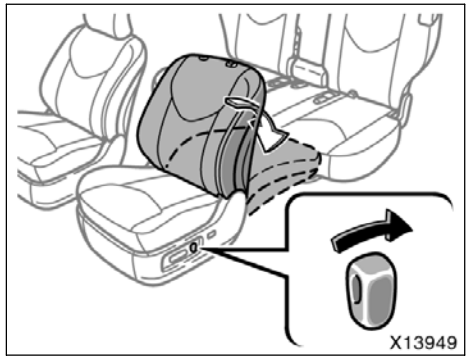

3. Move the seatback angle adjusting switch backward to flatten the seatback.

After returning the seat to its original position, be certain to replace the head restraint.

⚠ CAUTION

- Do not allow passengers to ride on the flattened seat while driving; use the seat in the normal position.
- After putting back the seat, try pushing the seat and seatback forward and rearward to make sure it is secured in place. Be certain to replace the head restraint.

Rear seats—
—Rear seat precautions

⚠ CAUTION

- **Do not adjust the seat while the vehicle is moving.**
- **Be careful that the seat does not hit a passenger or luggage.**
- **Adjust both seat cushions to the same position and align all seatbacks at the same angle when a person sits in the rear center position. Otherwise, the person cannot wear the seat belt properly and this may cause death or serious injuries in a collision.**
- **After adjusting the seat position, try sliding it forward and backward to make sure it is locked in position.**
- **After adjusting the seatback, push back your body to make sure the seat is locked in position.**

- **When returning seats to their original position, observe the following precautions in order to prevent death or serious injury in a collision or sudden stop:**

  Make sure the seat is securely locked by pushing forward and rearward on the top of the seatback. Failure to do so will prevent the seat belt from operating properly.

  Make sure the seat belts are not twisted or caught under the seat and are arranged in their proper position and are ready to use.

Folding down the seats will enlarge the luggage compartment. See “—Stowage precautions” on page 336 in Section 2 for precautions when loading luggage.

—Adjusting rear/second seats

Without third seat

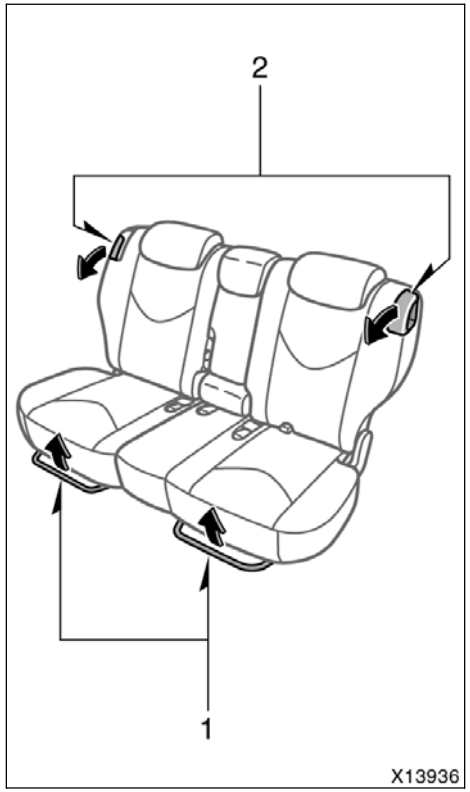

With third seat

1. SEAT POSITION ADJUSTING LEVERS

Hold the center of the lever and pull it up. Then slide the seat to the desired position with slight body pressure and release the lever.

When a person sits in the rear center position, adjust both seat cushions to the same position.

2. SEATBACK ANGLE ADJUSTING LEVERS

Pull down the lever. Then lean back to the desired angle and release the lever.

When a person sits in the rear center position, align all seatbacks at the same angle.

⚠ CAUTION

- Adjustments should not be made while the vehicle is moving.
- Adjust both seat cushions to the same position and align all seatbacks at the same angle when a person sits in the rear center position. Otherwise, the person cannot wear the seat belt properly and this may cause death or serious injuries in a collision.
- Avoid reclining the seatback any more than needed. The seat belts provide maximum protection in a frontal or rear collision when the passengers are sitting up straight and well back in the seats. If you are reclined, the lap belt may slide past your hips and apply restraint forces directly to the abdomen or your neck may contact the shoulder belt. In the event of a frontal collision, the more the seat is reclined, the greater the risk of death or serious injury.

- **After adjusting the seatback, push back your body to make sure it is locked in position.**
- **After adjusting the seat position, try sliding it forward and backward to make sure it is locked in position.**

—Moving second seat for third seat entry

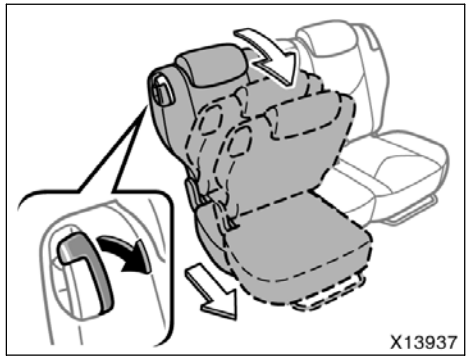

For easy access to the third seat from right side, do this.

Pull down the lever and fold the seatback. The seat will slide forward.

After passengers are in, lift up the seatback and return the seat to the original position.

⚠ CAUTION

After putting back the seat, try pushing the seat forward and rearward to make sure it is secured in place.

—Fold-down rear/second seats

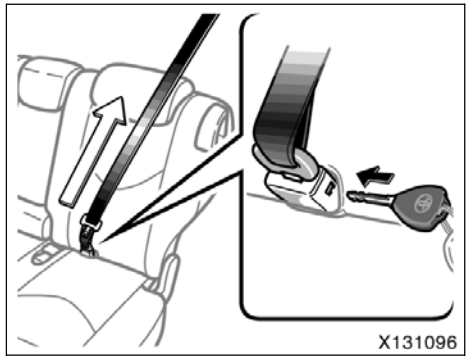

BEFORE FOLDING DOWN REAR/SECOND SEATS

1. **If the center seat belt is connected, release it to prevent damage.**

Insert the key into the hole on the buckle to release the tab, and allow the belt to retract.

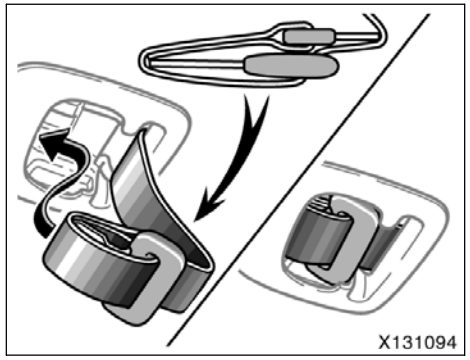

2. **Insert the tabs of the center seat belt into the cover. Make sure the tabs are securely locked in the cover.**

NOTICE
The seat belt tabs must be stowed before you fold the seatback.

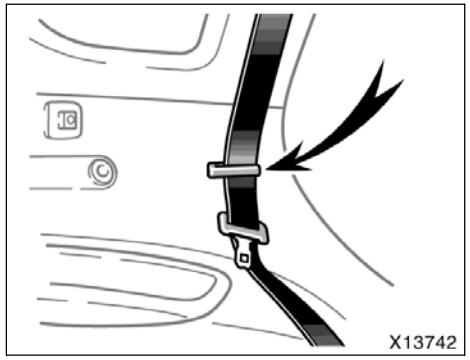

3. **Make sure the outer seat belt passes through the hanger when folding the rear/second seat.**

This prevents the shoulder belt from being damaged.

⚠ **CAUTION**
The seat belt must be removed from the hanger when the seat belt is in use.

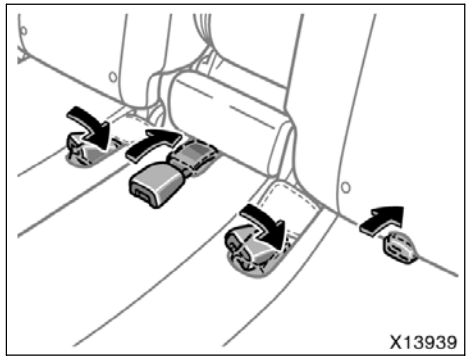

4. **Stow the rear/second seat belt buckles as shown in the illustration.**

This prevents the buckles from falling out when you fold down the rear/second seat.

⚠ **CAUTION**
Before using the seat belt, pull out the buckle and make sure the belt is not twisted.

NOTICE
The seat belt buckles must be stowed before you fold the seatback.

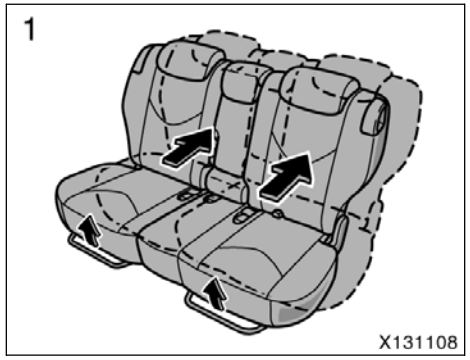

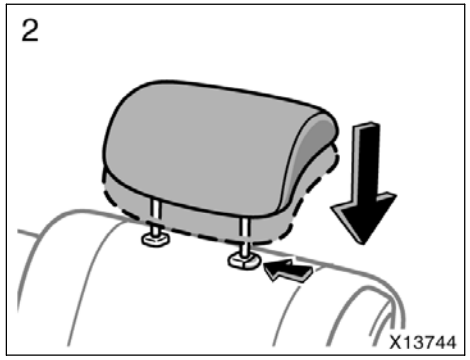

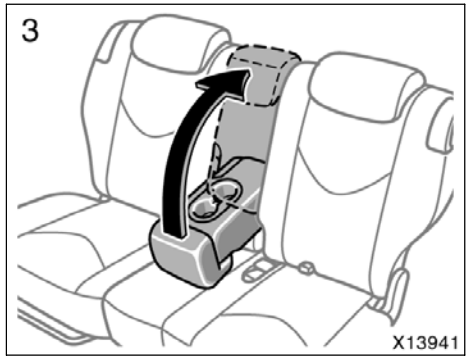

FOLDING DOWN REAR/SECOND SEATS

1. **Hold the center of the lever and pull it up. Then slide the rear seat fully backward and pull it forward slightly until it locks.**
2. **Lower the head restraint to the lowest position.**
3. **Raise the armrest until it locks.**

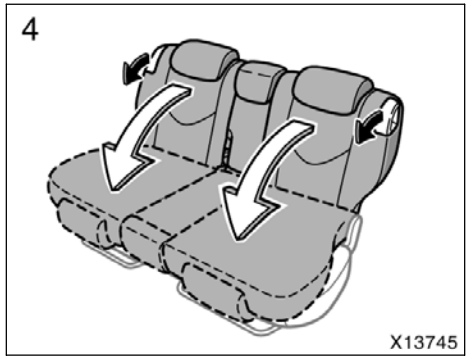

4. **Pull down the seatback angle adjusting lever and fold down the seatback.**

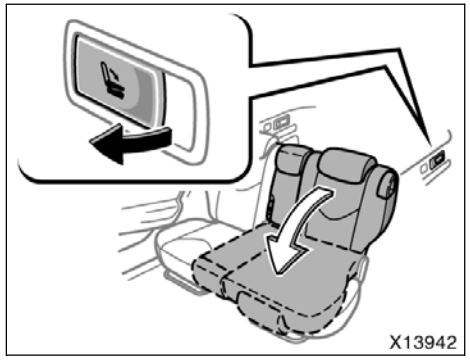

Left side

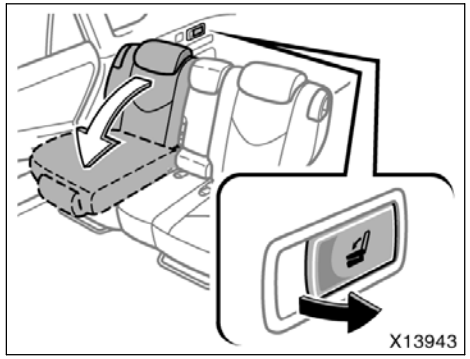

Right side

Without third seats—
The rear seat can be folded down for the luggage compartment. Open the back door and pull the lock release lever to fold down the rear seat.

Before folding down the rear seat, slide the rear seat fully backward and pull it forward slightly until it locks. Then raise the armrest until it locks.

Folding down the seats will enlarge the luggage compartment. See “—Stowage precautions” on page 336 in Section 2 for precautions when loading luggage.

CAUTION

Do not fold the rear seatback when the rear passengers sit on the rear seats or the luggage is placed on the seat. Make sure that no passengers or luggage are on the rear seats.

RETURNING SEATBACKS

Raise the seatback until it locks.

CAUTION

Do not allow passengers to ride on the folded seat or in the luggage compartment while driving; use the seat in its normal position.

When returning the seatback to the upright position, observe the following precautions in order to prevent serious injury in a collision or sudden stop:

- **Make sure the seatback is securely locked by pushing forward and rearward on the top of the seatback. Failure to do so will prevent the seat belt from operating properly.**
- **Make sure the seat belts are not twisted or caught in the seatback and are arranged in their proper position and are ready to use.**

—Stowing third seats for luggage space

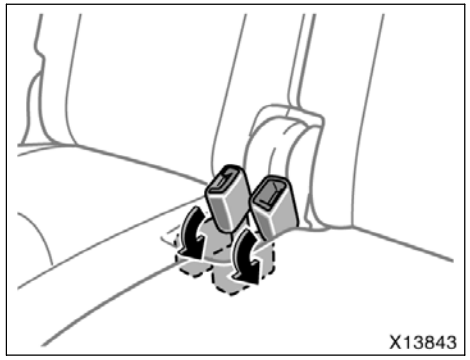

BEFORE FOLDING DOWN THIRD SEATS

1. **Stow the third seat belt buckles as shown in the illustration.**

NOTICE

To prevent damage to the seat belt buckles, they must be stowed before you fold down the seatback.

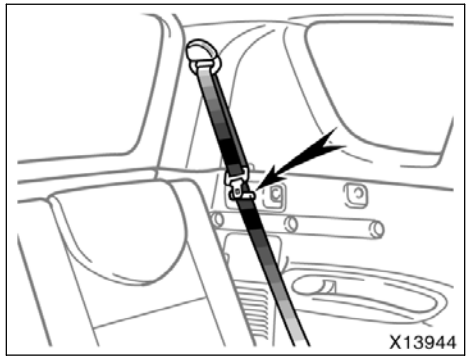

2. **Pass the third seat belts through the hangers.**

This prevents the shoulder belt from being damaged.

⚠ CAUTION

The seat belt must be removed from the hanger when the seat belt is in use.

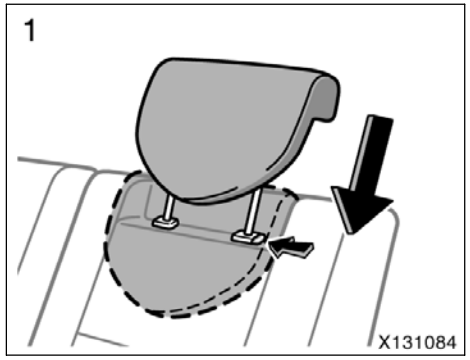

STOWING THIRD SEATS

1. **Lower the head restraint to the lowest position.**

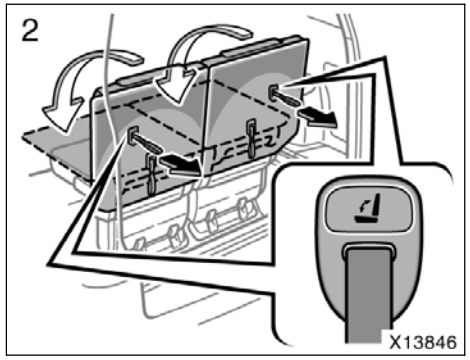

2. **Pull the seatback lock release strap to fold down the seatback. Make sure it is locked securely.**

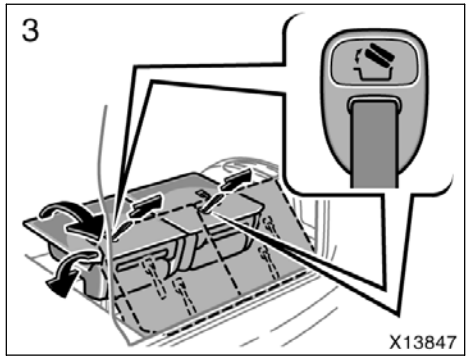

3. Pull and hold the seat lock release strap and lift up the seat rearward. Then push the seat down.

If the seat does not lift up when the seat lock release strap is pulled, lift the seat-back by pulling the seatback lock release strap, and push the seatback down again.

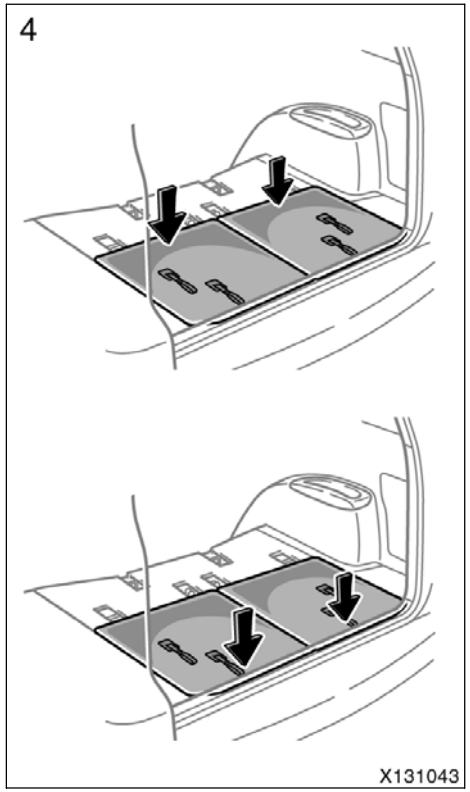

4. Push the seat on the front side against the floor and push the seat on rear side against the floor. Make sure it is locked securely.

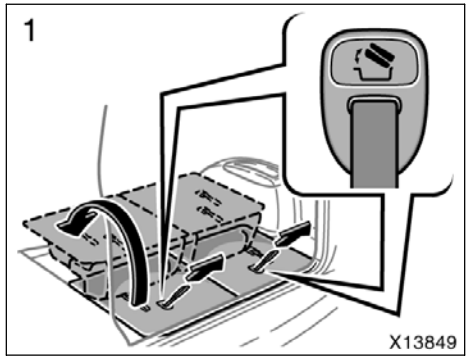

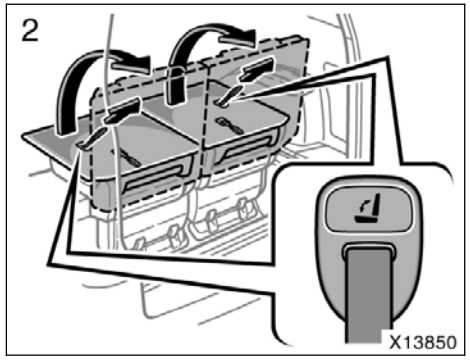

RETURNING THIRD SEATS

1. **Pull and hold the seat lock release strap, then lift up the seat forward. Push the seat down. Push the seat on the rear side against the floor and push the seat on the front side. Make sure it is locked securely.**

If the seat does not lift up when the seat lock release strap is pulled, lock the seatback again.

To lock the seatback, lift the seatback by pulling the seatback lock release strap and push the seatback down.

2. **Pull the seatback lock release strap and raise the seatback.**

⚠ CAUTION

When stowing or returning the seat, observe the following precautions in order to prevent death or serious injury:

- **Make sure the seat is free of people or luggage. Then, hold the seat and slowly move it. Otherwise, people may be injured or luggage may be damaged if the seat hits them.**
- **Be careful not to get your hands or feet pinched in the seat.**
- **Do not stow and return the seats when you are inside the vehicle in order to prevent pinching your hands or feet in the seat. Be sure to stow and return the seats from outside the vehicle.**

When returning seats to their original position, observe the following precautions in order to prevent death or serious injury in a collision or sudden stop:

- **Make sure the seat is securely locked by pushing forward and rearward on the top of the seatback or by trying to pull up the edge of the bottom cushion. Failure to do so will prevent the seat belt from operating properly.**
- **Make sure the seat belts are not twisted or caught in the seatback and are arranged in their proper position and are ready to use.**

Armrest

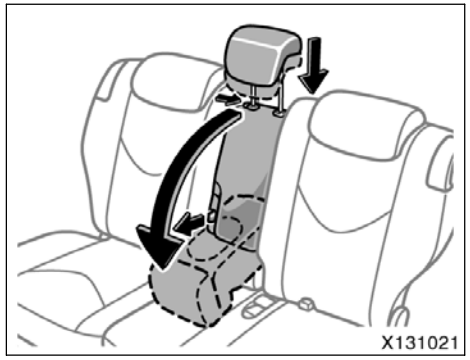

To use the armrest, lower the center head restraint. Pull the strap and pull the armrest down.

NOTICE
To prevent damage to the armrest, avoid putting heavy loads on it.

Head restraints

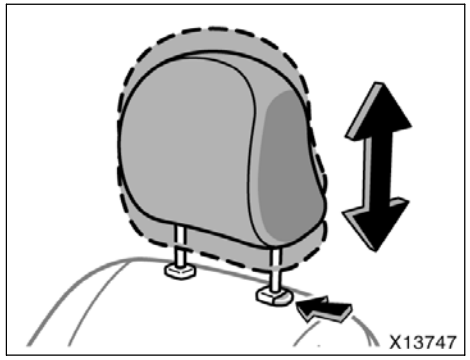

Front seats

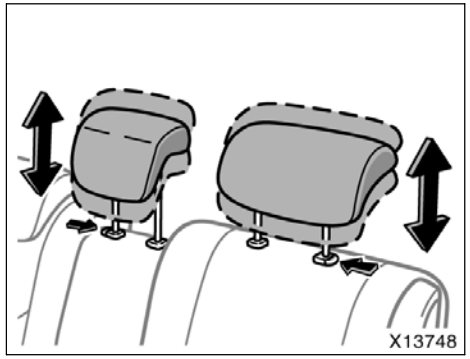

Rear/second seats

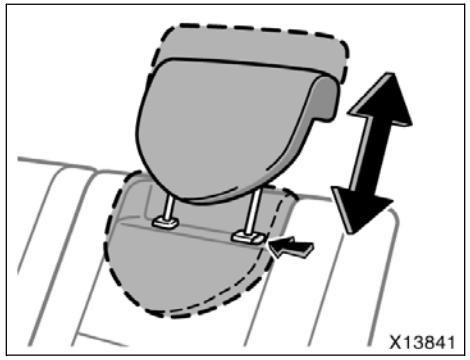

Third seats

For your safety and comfort, adjust the head restraint before driving.

To raise: Pull it up.
To lower: Push it down while pressing the lock release button.

The rear/second seats and third seats head restraints—When an occupant sits on the rear seats, always pull up the head restraint to the lock position.

The head restraint is most effective when it is close to your head. Therefore, using a cushion on the seatback is not recommended.

CAUTION

- **Adjust the center of the head restraint so that it is closest to the top of your ears.**
- **After adjusting the head restraint, make sure it is locked in position.**
- **Do not drive with the head restraints removed.**

Seat heaters

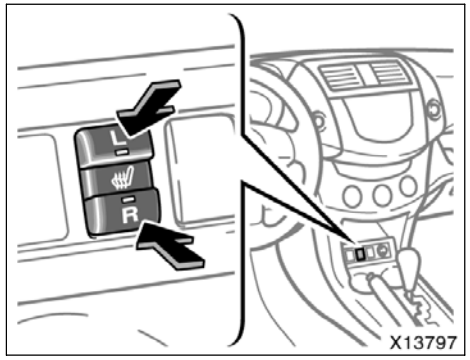

To turn on the seat heater, push the switches (“L” switch for driver’s seat and “R” switch for passenger’s seat). At this time, the indicator light will illuminate to indicate the seat heater is operating.

To turn off the seat heater, push the switch once again.

The engine switch must be in the “ON” position to operate seat heaters.

⚠ CAUTION

Occupants must use caution when operating the seat heater because it may make them feel too hot or cause burns at low temperatures (erythema, varicella). Use extra caution for;

- **Babies, small children, elderly persons, sick persons or persons with physical disabilities**
- **Persons who have sensitive skin**
- **Persons who are exhausted**
- **Persons who have taken alcohol or drugs which induce sleep (sleeping drug, cold remedy, etc.)**

To prevent the seat overheating, do not use the seat heater with a blanket, cushion, or other insulating objects which cover the seat.

NOTICE

- ***Do not put unevenly weighed objects on the seat and do not stick sharp objects (needles, nails, etc.) into the seat.***
- ***When cleaning the seats, do not use organic substances (paint thinner, benzine, alcohol, gasoline, etc.). They may damage the heater and seat surface.***
- ***To prevent the battery from being discharged, turn the switch off when the engine is not running.***

Seat belts—
—Seat belt precautions

Toyota strongly urges that the driver and passengers in the vehicle be properly restrained at all times with the seat belts provided. Failure to do so could increase the chance of injury and/or the severity of injury in accidents.

The seat belts provided for your vehicle are designed for people of adult size, large enough to properly wear them.

Child. Use a child restraint system appropriate for the child until the child becomes large enough to properly wear the vehicle’s seat belts. See “Child restraint” on page 85 in this Section for details.

If a child is too large for a child restraint system, the child should sit in the rear seat and must be restrained using the vehicle’s seat belt. According to accident statistics, the child is safer when properly restrained in the rear seat than in the front seat.

If a child must sit in the front seat, the seat belts should be worn properly. If an accident occurs and seat belts are not worn properly, the force of the rapid inflation of the airbag may cause death or serious injury to the child.

Do not allow any children to stand up or kneel on either rear or front seats. An unrestrained child could suffer serious injury or death during emergency braking or a collision. Also, do not let the child sit on your lap. Holding a child in your arms does not provide sufficient restraint.

Pregnant woman. Toyota recommends the use of a seat belt. Ask your doctor for specific recommendations. The lap belt should be worn securely and as low as possible over the hips and not on the waist.

Injured person. Toyota recommends the use of a seat belt. Depending on the injury, first check with your doctor for specific recommendations.

⚠ CAUTION

Persons should ride in their seats properly wearing their seat belts whenever the vehicle is moving. Otherwise, they are much more likely to suffer death or serious bodily injury, in the event of sudden braking or a collision.

When using the seat belts, observe the following:

- **Use the belt for only one person at a time. Do not use a single belt for two or more people—even children.**
- **Avoid reclining the seatback any more than needed. The seat belts provide maximum protection in a frontal or rear collision when the driver and the front passenger are sitting up straight and well back in the seats. If you are reclined, the lap belt may slide past your hips and apply restraint forces directly to the abdomen or your neck may contact the shoulder belt. In the event of a frontal collision, the more the seat is reclined, the greater the risk of death or serious injury.**
- **Be careful not to damage the belt webbing or hardware. Take care that they do not get caught or pinched in the seat or side doors.**
- **Inspect the belt system periodically. Check for cuts, fraying, and loose parts. Damaged parts should be replaced. Do not disassemble or modify the system.**
- **Keep the belts clean and dry. If they need cleaning, use a mild soap solution or lukewarm water. Never use bleach, dye, or abrasive cleaners, or allow them to come into contact with the belts—they may severely weaken the belts. (See “Cleaning the interior” on page 386 in Section 5.)**
- **Replace the belt assembly (including bolts) if it has been used in a severe impact. The entire assembly should be replaced even if damage is not obvious.**

—Fastening front and rear seat belts

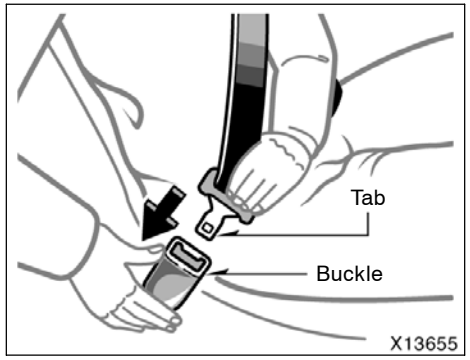

Adjust the seat as needed and sit up straight and well back in the seat. To fasten your belt, pull it out of the retractor and insert the tab into the buckle.

You will hear a click when the tab locks into the buckle.

The seat belt length automatically adjusts to your size and the seat position.

The retractor will lock the belt during a sudden stop or on impact. It also may lock if you lean forward too quickly. A slow, easy motion will allow the belt to extend, and you can move around freely.

When a passenger’s shoulder belt is completely extended and is then retracted even slightly, the belt is locked in that position and cannot be extended. This feature is used to hold the child restraint system securely. (For details, see “Child restraint” on page 85 in this Section.) To free the belt again, fully retract the belt and then pull the belt out once more.

If the seat belt cannot be pulled out of the retractor, firmly pull the belt and release it. You will then be able to smoothly pull the belt out of the retractor.

⚠ CAUTION

- **After inserting the tab, make sure the tab and buckle are locked and that the belt is not twisted.**
- **Do not insert coins, clips, etc. in the buckle as this may prevent you from properly latching the tab and buckle.**
- **If the seat belt does not function normally, immediately contact your Toyota dealer. Do not use the seat until the seat belt is fixed, because it cannot protect an adult occupant or your child from death or serious injury.**

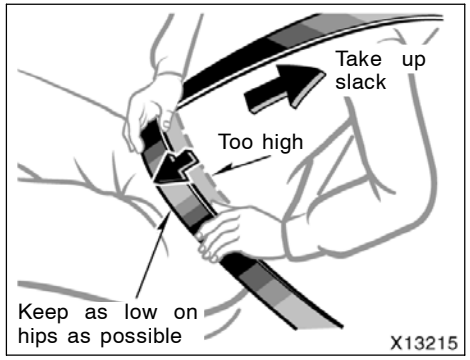

Adjust the position of the lap and shoulder belts.

Position the lap belt as low as possible on your hips—not on your waist, then adjust it to a snug fit by pulling the shoulder portion upward through the latch plate.

⚠ CAUTION

- **Both high–positioned lap belts and loose–fitting belts could cause death or serious injuries due to sliding under the lap belt during a collision or other unintended event. Keep the lap belt positioned as low on hips as possible.**
- **Do not place the shoulder belt under your arm.**

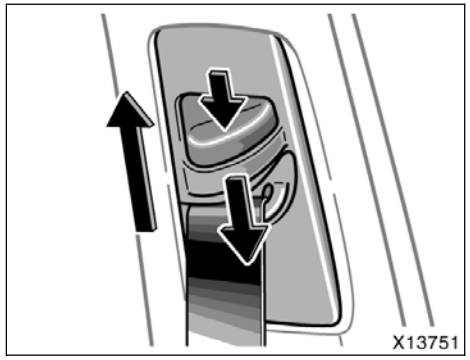

Seat belts with an adjustable shoulder anchor—

Adjust the shoulder anchor position to your size.

To raise: Slide the anchor up.
To lower: Push in the lock release button and slide the anchor down.

After adjustment, make sure the anchor is locked in position.

⚠ CAUTION

Always make sure the shoulder belt is positioned across the center of your shoulder. The belt should be kept away from your neck, but not falling off your shoulder. Failure to do so could reduce the amount of protection in an accident and cause death or serious injuries in a collision.

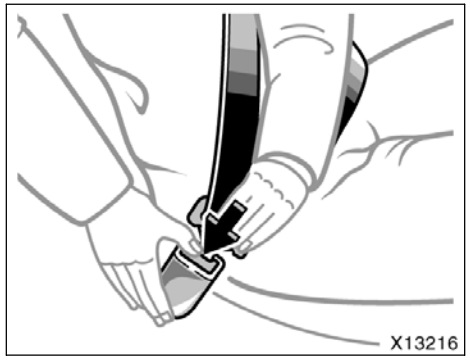

To release the belt, press the buckle release button and allow the belt to retract.

If the belt does not retract smoothly, pull it out and check for kinks or twists. Then make sure it remains untwisted as it retracts.

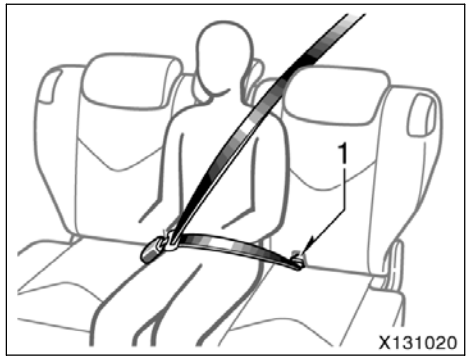

REAR/SECOND CENTER SEAT BELT

The rear/second center seat belt is a 3–point type restraint with 2 buckles. Both seat belt buckles must be correctly located and securely latched for proper operation.

Make sure that buckle 1 is securely latched for ready use of the center seat belt.

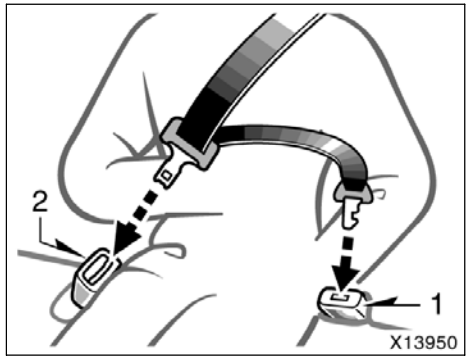

Two buckles and tabs for rear/second center seat belt

The two tabs have different shape for its end so that the belt is not buckled in the wrong place.

Buckle 1—Properly matches with hook end tab
Buckle 2—Properly matches with round end tab

⚠ CAUTION

Make sure the both buckles are correctly located and securely latched. Failure to properly match the buckle and tab may cause death or severe injury in case of an accident or a collision.

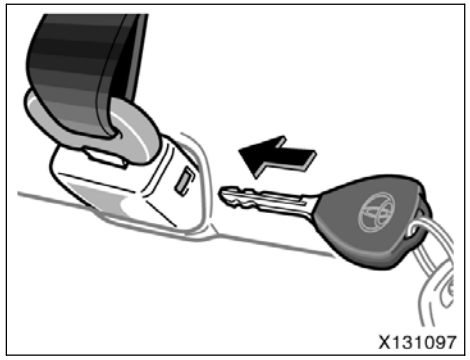

To release the hook end tab, insert the key into the hole on the buckle and allow the belt to retract.

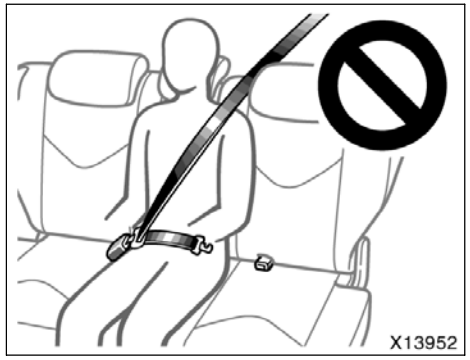

⚠ CAUTION

Do not use the rear/second center seat belt with either buckle released. Fastening only the shoulder belt or lap belt may cause death or severe personal injury in case of sudden braking or a collision.

—Stowing the rear seat belt buckles

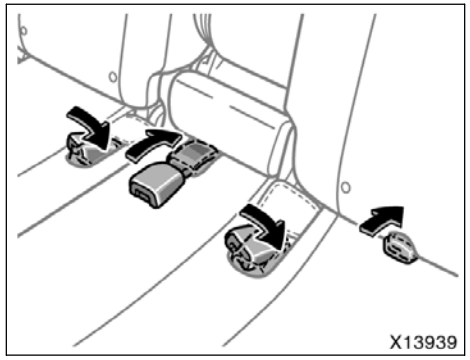

Rear/second seat belt buckles

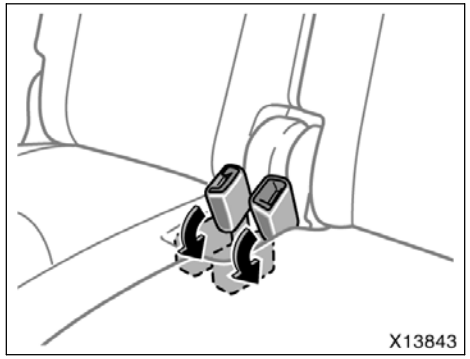

Third seat belt buckles

The rear seat belt buckles can be stowed when not in use.

The seat belt buckles must be stowed before you fold the seatback.

⚠ CAUTION

Before using the seat belt, pull out the buckle and make sure the belt is not twisted.

—Stowing the rear/second center seat belt

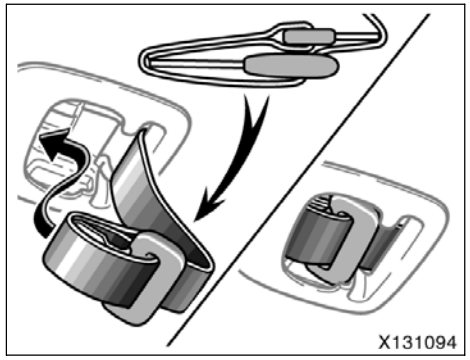

STOWING THE REAR/SECOND CENTER SEAT BELT

Insert the tabs of the center seat belt into the cover as shown above. Make sure the tabs are securely locked in the cover.

The seat belt must be stowed before you fold the seatback.

NOTICE

Stow the rear/second center seat belt when not in use.

—Seat belt extender

If your seat belts cannot be fastened securely because they are not long enough, a personalized seat belt extender is available from your Toyota dealer free of charge.

Please contact your local Toyota dealer to order the proper required length for the extender. Bring the heaviest coat you expect to wear for proper measurement and selection of length. Additional ordering information is available at your Toyota dealer.

⚠ CAUTION

When using the seat belt extender, observe the following precautions. Failure to follow these instructions could reduce the effectiveness of the seat belt restraint system in case of an accident, increasing the chance of death or serious injury.

- **Remember that the extender provided for you may not be safe when used on a different vehicle, for another person, or at a different seating position than the one originally intended.**

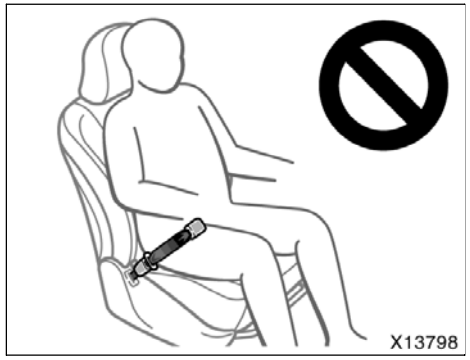

- **If the seat belt extender has been connected to the driver’s seat belt buckle without wearing the seat belt when using the extender in the driver’s seat, the SRS driver’s airbag system will judge that the driver wears the seat belt even if not wearing it. In this case, the driver’s airbag may not activate correctly, causing death or serious injury in the event of collision. Be sure to wear the seat belt with the seat belt extender.**

- **Make sure the “AIR BAG ON” indicator light is illuminated when using the seat belt extender for the front passenger seat. If the “AIR BAG OFF” indicator light is illuminated, disconnect the extender tongue from the seat belt buckle, then reconnect the seat belt. Reconnect the seat belt extender after making sure the “AIR BAG ON” indicator light is illuminated. If you use the seat belt extender while the “AIR BAG OFF” indicator light is illuminated, the front passenger airbag and side airbag on the front passenger side may not activate correctly, causing death or serious injury in the event of collision.**
- **Be sure to wear the seat belt without the seat belt extender if you can fasten the seat belt without the extender.**

- **Do not use the seat belt extender when installing a child restraint system on the front or rear passenger seat. If installing a child restraint system with the seat belt extender connected to the seat belt, the seat belt will not securely hold the child restraint system, which could cause death or serious injury to the child or other passengers in the event of collision.**

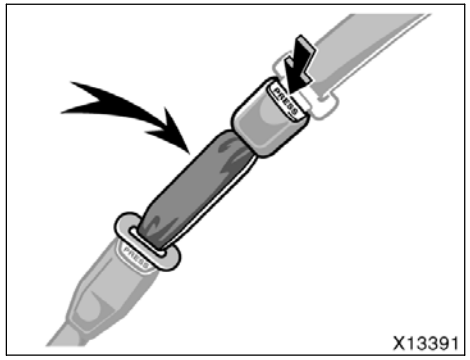

To connect the extender to the seat belt, insert the tab into the seat belt buckle so that the “PRESS” signs on the buckle release buttons of the extender and the seat belt are both facing outward as shown.

You will hear a click when the tab locks into the buckle.

When releasing the seat belt, press on the buckle release button on the extender, not on the seat belt. This helps prevent damage to the vehicle interior and extender itself.

As far as the seat belt extender on the front passenger side is concerned, do not fail to disconnect the extender from the seat belt after the above operation in order to activate the front passenger airbag correctly when getting into the vehicle next time.

When not in use, remove the extender and store in the vehicle for future use.

⚠ CAUTION

- **After inserting the tab, make sure the tab and buckle are locked and that the lap and shoulder portions of the belt and the seat belt extender are not twisted.**
- **Do not insert coins, clips, etc. in the buckle as this may prevent you from properly latching the tab and buckle.**
- **If the seat belt does not function normally, immediately contact your Toyota dealer. Do not use the seat until the seat belt is fixed, because it cannot protect an adult occupant or your child from death or serious injury.**

—Seat belt pretensioners

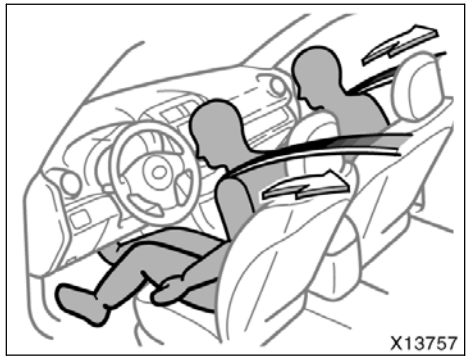

Vehicles without curtain shield airbags—The driver and front passenger seat belt pretensioners are designed to be activated in response to a severe frontal impact.

Vehicles with curtain shield airbags—The driver and front passenger seat belt pretensioners are designed to be activated in response to a severe frontal impact or a vehicle roll over.

Vehicles without curtain shield airbags—When the sensor detects a severe frontal impact, the front seat belts are quickly drawn back by the retractors so that the belts snugly restrain the occupants.

Vehicles with curtain shield airbags—When the sensor detects a severe frontal impact or a vehicle roll over, the front seat belts are quickly drawn back by the retractors so that the belts snugly restrain the occupants.

The front passenger’s seat belt pretensioner will not activate if no passenger is detected in the front passenger seat by the front passenger occupant classification system. However, the front passenger’s seat belt pretensioner may activate if luggage is put on the seat, or the seat belt is buckled up regardless of the presence of an occupant in the seat. (As for the front passenger occupant classification system, see “—Front passenger occupant classification system” on page 81 in this Section.)

The seat belt pretensioners and SRS airbags may not operate together in all collisions.

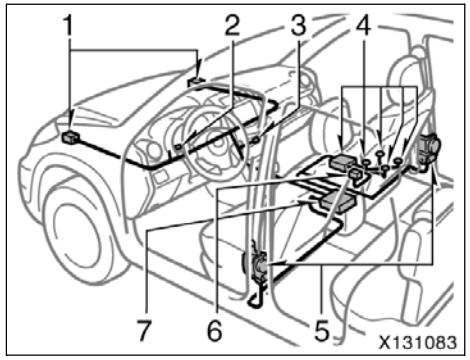

The seat belt pretensioner system consists mainly of the following components and their locations are shown in the illustration.

1. Front airbag sensors
2. SRS warning light
3. “AIR BAG ON” and “AIR BAG OFF” indicator lights
4. Front passenger occupant classification system (ECU and sensors)
5. Seat belt pretensioner assemblies
6. Front passenger’s seat belt buckle switch
7. Airbag sensor assembly

The seat belt pretensioners are controlled by the airbag sensor assembly. The airbag sensor assembly consists of a safing sensor and airbag sensor.

When the seat belt pretensioners are activated, an operating noise may be heard and a small amount of non–toxic gas may be released. This does not indicate that a fire is occurring. This gas is normally harmless.

Once the seat belt pretensioners have been activated, the seat belt retractors remain locked.

If the vehicle is involved in multiple collisions, the pretensioner will activate for the first collision, but will not activate for the second or subsequent collisions.

⚠ CAUTION

Observe the following precautions to reduce the risk of injury in the event of sudden braking or an accident. Failure to do so may cause death or severe injury.

- **If the pretensioner has activated, the seat belt becomes locked: it cannot be further extended, nor will it return to the stowed position. The seat belt cannot be used again and must be replaced at your Toyota dealer.**
- **Do not modify, remove, strike or open the seat belt pretensioner assemblies, airbag sensor or surrounding area or wiring. Consult your Toyota dealer about any repair and modification.**

NOTICE

Do not perform any of the following changes without consulting your Toyota dealer. Such changes can interfere with proper operation of the seat belt pretensioners in some cases.

- ***Installation of electronic devices such as a mobile two–way radio, cassette tape player or compact disc player***
- ***Repairs on or near the front seat belt retractor assemblies***
- ***Modification of the suspension system***
- ***Modification of the front end structure***
- ***Attachment of a grille guard (bull bar, kangaroo bar, etc.), snowplow, winches or any other equipment to the front end***
- ***Repairs made on or near the front fenders, front end structure or console***

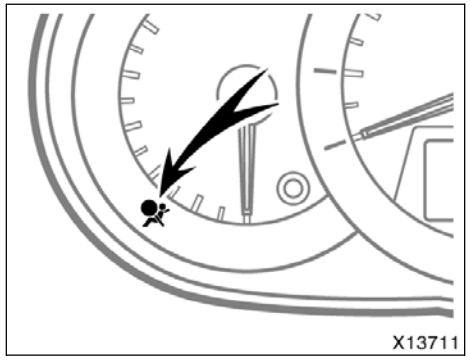

This indicator comes on when the engine switch is turned to the “ON” position. It goes off after about 6 seconds. This means the seat belt pretensioners are operating properly.

This warning light system monitors the airbag sensor assembly, front airbag sensors, side and curtain shield airbag sensors, curtain shield airbag sensors, driver’s seat position sensor, driver’s seat belt buckle switch, “AIR BAG ON” indicator light, “AIR BAG OFF” indicator light, front passenger’s seat belt buckle switch, seat belt pretensioner assemblies, inflators, interconnecting wiring and power sources. (For details, see “Service reminder indicators and warning buzzers” on page 129 in Section 1–6.)

If any of the following conditions occurs, this indicates a malfunction of the airbags or seat belt pretensioners. Contact your Toyota dealer as soon as possible.

- The light does not come on when the engine switch is turned to the “ON” position or remains on for more than 6 seconds.
- The light comes on while driving.
- If any seat belt does not retract or cannot be pulled out due to a malfunction or activation of the relevant seat belt pretensioner.
- The seat belt pretensioner assembly or surrounding area has been damaged.

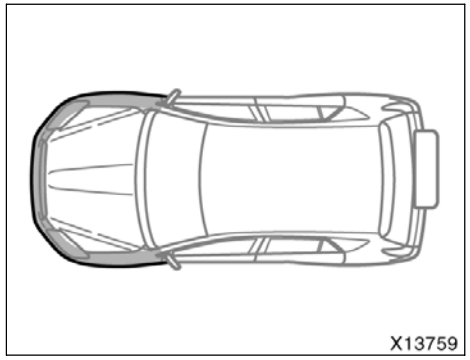

In the following cases, contact your Toyota dealer as soon as possible:

- The front of the vehicle (shaded in the illustration) was involved in an accident that was not severe enough to cause the seat belt pretensioners to operate.
- Either seat belt pretensioner assembly or surrounding area is scratched, cracked, or otherwise damaged.

SRS airbags—
—SRS driver airbag and front passenger airbag

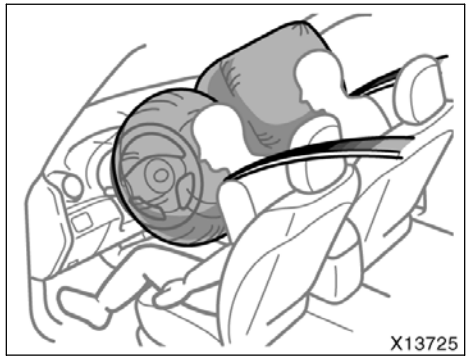

The SRS (Supplemental Restraint System) front airbags are designed to provide further protection for the driver and front passenger in addition to the primary safety protection provided by the seat belts.

Your vehicle is equipped with “ADVANCED AIRBAGS” designed based on US motor vehicle safety standards (FMVSS208). The airbag system controls airbag deployment power for the driver and front passenger. The driver airbag system consists of the driver seat’s position sensor etc. The front passenger’s airbag system consists of the front passenger occupant classification sensor etc.

In response to a severe frontal impact, the SRS front airbags work with the seat belts to help reduce injury by inflating. The SRS front airbags help reduce injuries mainly to the driver’s or front passenger’s head or chest caused by hitting the vehicle interior.

The SRS front passenger airbag will not activate if there is no passenger sitting in the front passenger seat. However, the front passenger airbag may deploy if luggage is put in the seat, or the seat belt is buckled up, regardless of the presence of an occupant in the seat. (As for the front passenger occupant classification system, see “—Front passenger occupant classification system” on page 81 in this Section.)

Always wear your seat belt properly.

⚠ CAUTION

- **The SRS front airbag system is designed only as a supplement to the primary protection of the driver and front passenger seat belt systems. The driver and front passenger can be killed or seriously injured by the inflating airbags if they do not wear the available seat belts properly. During sudden braking just before a collision, an unrestrained driver or front passenger can move forward into direct contact with or close proximity to the airbag which may then deploy during the collision. To ensure maximum protection in an accident, the driver and all passengers in the vehicle must wear their seat belts properly. Wearing a seat belt properly during an accident reduces the chances of death or serious injury or being thrown out of the vehicle. For instructions and precautions concerning the seat belt system, see “Seat belts” on page 53 in this Section.**

- **Improperly seated and/or restrained infants and children can be killed or seriously injured by the deploying airbags. An infant or child who is too small to use a seat belt should be properly secured using a child restraint system. Toyota strongly recommends that all infants and children be placed in the rear seat of the vehicle and properly restrained. The rear seat is the safest for infants and children. For instructions concerning the installation of a child restraint system, see “Child restraint” on page 85 in this Section.**

The SRS front airbags are designed to deploy in severe (usually frontal) collisions where the magnitude and duration of the forward deceleration of the vehicle exceeds the designed threshold level.

The SRS front airbags will deploy if the severity of the impact is above the designed threshold level, comparable to an approximate 25 km/h (15 mph) collision when the vehicle has the impact straight into a fixed barrier that does not move or deform.

However, this threshold velocity will be considerably higher if the vehicle strikes an object, such as a parked vehicle or sign pole, which can move or deform on impact, or if the vehicle is involved in an underride collision (e.g. a collision in which the front of the vehicle “underrides”, or goes under, the bed of a truck, etc.).

It is possible that in some collisions where the forward deceleration of the vehicle is very close to the designed threshold level, the SRS front airbags and the seat belt pretensioners may not activate together.

Always wear your seat belts properly.

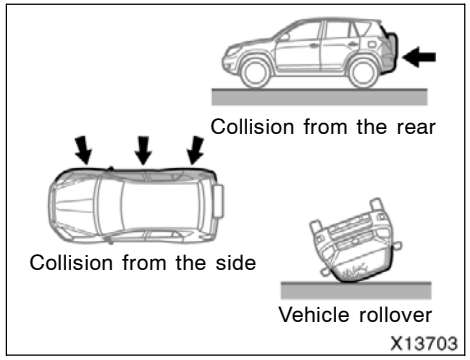

The SRS front airbags are not generally designed to inflate if the vehicle is involved in a side or rear collision, if it rolls over, or if it is involved in a low–speed frontal collision. But, whenever a collision of any type causes sufficient forward deceleration of the vehicle, deployment of the SRS front airbags may occur.

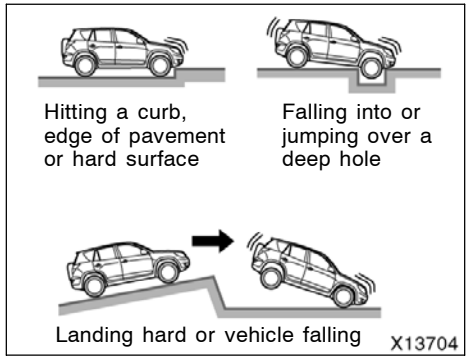

The SRS front airbags may also deploy if a serious impact occurs to the underside of your vehicle. Some examples are shown in the illustration.

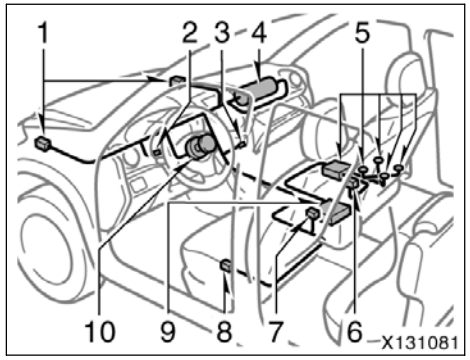

The SRS front airbag system consists mainly of the following components, and their locations are shown in the illustration.

1. Front airbag sensors
2. SRS warning light
3. “AIR BAG ON” and “AIR BAG OFF” indicator lights
4. Airbag module for front passenger (airbag and inflator)
5. Front passenger occupant classification system (ECU and sensors)
6. Front passenger’s seat belt buckle switch
7. Driver’s seat belt buckle switch
8. Driver’s seat position sensor
9. Airbag sensor assembly
10. Airbag module for driver (airbag and inflator)

The airbag sensor assembly consists of a safing sensor and airbag sensor.

The front airbag sensors constantly monitor the forward deceleration of the vehicle. If an impact results in a forward deceleration beyond the designed threshold level, the system triggers the airbag inflators. At this time a chemical reaction in the inflators very quickly fills the airbags with non–toxic gas to help restrain the forward motion of the occupants. The front airbags then quickly deflate, so that there is no obstruction of the driver’s vision should it be necessary to continue driving.

When the airbags inflate, they produce a loud noise and release some smoke and residue along with non–toxic gas. This does not indicate a fire. This smoke may remain inside the vehicle for some time, and may cause some minor irritation to the eyes, skin or breathing. Be sure to wash off any residue as soon as possible to prevent any potential skin irritation with soap and water. If you can safely exit from the vehicle, you should do so immediately.

Deployment of the airbags happens in a fraction of a second, so the airbags must inflate with considerable force. While the system is designed to reduce serious injuries, primarily to the head and chest, it may also cause other, less severe injuries to the face, chest, arms and hands. These are usually in the nature of minor burns or abrasions and swelling, but the force of a deploying airbag can cause more serious injuries, especially if an occupant’s hands, arms, chest or head is in close proximity to the airbag module at the time of deployment. This is why it is important for the occupant to: avoid placing any object or part of the body between the occupant and the airbag module; sit straight and well back into the seat; wear the available seat belt properly; and sit as far as possible from the airbag module, while still maintaining control of the vehicle.

Parts of the airbag module (steering wheel hub, airbag cover and inflator) may be hot for several minutes after deployment, so do not touch! The airbags inflate only once. The windshield may be damaged by absorbing some of the force of the inflating airbag.

⚠ CAUTION

The driver or front passenger who is too close to the steering wheel or dashboard during airbag deployment can be killed or seriously injured. Toyota strongly recommends that:

- **The driver sit as far back as possible from the steering wheel while still maintaining control of the vehicle.**
- **The front passenger sit as far back as possible from the dashboard.**
- **All vehicle occupants be properly restrained using the available seat belts.**

For instructions and precautions concerning the seating position, see “—Front seat precautions” on page 34 in this Section.

- **Do not sit on the edge of the seat or lean against the dashboard when the vehicle is in use, since the front passenger airbag could inflate with considerable speed and force. Anyone who is up against, or very close to, an airbag when it inflates, can be killed or seriously injured. Sit up straight and well back in the seat, and always use your seat belt properly.**

- **Toyota strongly recommends that all infants and children be placed in the rear seat of the vehicle and be properly restrained.**
- **Do not hold a child on your lap or in your arms. Use a child restraint system in the rear seat. For instructions concerning the installation of a child restraint system, see “Child restraint” on page 85 in this Section.**

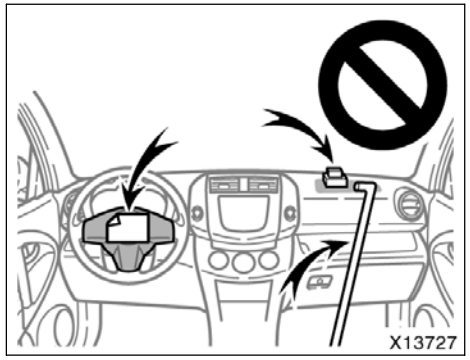

- **Do not put anything or any part of your body on or in front of the dashboard or steering wheel pad that houses the front airbag system. They might restrict inflation or cause death or serious injury as they are projected rearward by the force of the deploying airbags. Likewise, the driver and front passenger should not hold objects in their arms or on their knees.**

- **Do not modify or remove any wiring. Do not modify, remove, strike or open any components such as the steering wheel pad, steering wheel, column cover, dashboard near the front passenger airbag, front passenger airbag or airbag sensor assembly. Doing so may prevent the front airbag system from activating correctly, cause sudden activation of the system or disable the system, which could result in death or serious injury.**

Failure to follow these instructions can result in death or serious injury. Consult your Toyota dealer about any repair and modification.

If you wish to modify your vehicle for a person with physical disability, consult your Toyota dealer. It may dangerously interfere with the SRS front airbags operation.

NOTICE

Do not perform any of the following changes without consulting your Toyota dealer. Such changes can interfere with proper operation of the SRS front airbag system in some cases.

- ***Installation of electronic devices such as a mobile two-way radio, cassette tape player or compact disc player***
- ***Modification of the suspension system***
- ***Modification of the front end structure***
- ***Attachment of a grille guard (bull bar, kangaroo bar, etc.), snowplow, winches or any other equipment to the front end***
- ***Repairs made on or near the front fenders, front end structure, console, steering column, steering wheel or dashboard near the front passenger airbag***

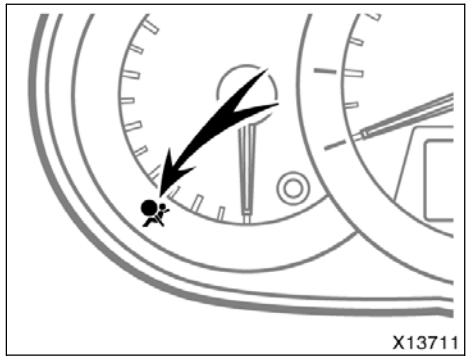

This indicator comes on when the engine switch is turned to the “ON” position. It goes off after about 6 seconds. This means the SRS front airbags are operating properly.

This warning light system monitors the airbag sensor assembly, front airbag sensors, side and curtain shield airbag sensors, curtain shield airbag sensors, driver’s seat position sensor, driver’s seat belt buckle switch, “AIR BAG ON” indicator light, “AIR BAG OFF” indicator light, front passenger’s seat belt buckle switch, seat belt pretensioner assemblies, inflators, interconnecting wiring and power sources. (For details, see “Service reminder indicators and warning buzzers” on page 129 in Section 1-6.)

If any of the following conditions occurs, this indicates a malfunction of the airbags or seat belt pretensioners. Contact your Toyota dealer as soon as possible.

- The light does not come on when the engine switch is turned to the “ON” position or remains on for more than 6 seconds.
- The light comes on while driving.

The SRS warning light and “AIR BAG OFF” indicator light will come on if there is a malfunction in the front passenger occupant classification system.

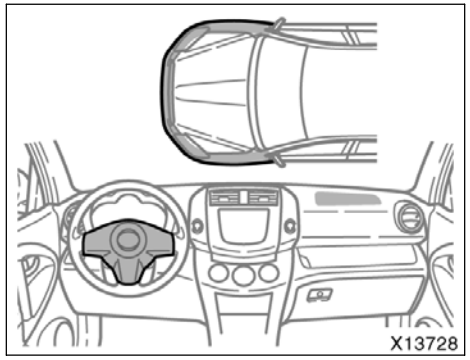

In the following cases, contact your Toyota dealer as soon as possible:

- The SRS front airbags have been inflated.
- The front of the vehicle (shaded in the illustration) was involved in an accident that was not severe enough to cause the SRS front airbags to inflate.
- The pad section of the steering wheel or dashboard (shaded in the illustration) is scratched, cracked, or otherwise damaged.

NOTICE
Do not disconnect the battery cables before contacting your Toyota dealer.

—SRS side airbags and curtain shield airbags

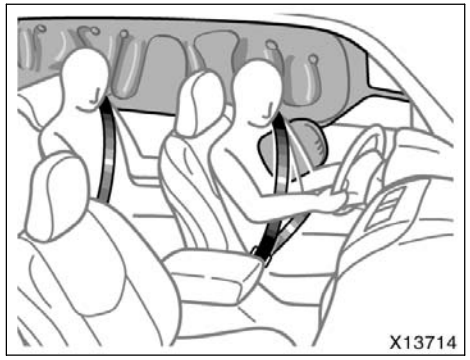

The SRS (Supplemental Restraint System) side airbags and curtain shield airbags are designed to provide further protection for the driver, front passenger and rear/second passengers in addition to the primary safety protection provided by the seat belts.

In response to a severe side impact, the SRS side airbag and curtain shield airbags in the impacted side work with the seat belts to help reduce injury by inflating. The SRS side airbags help reduce injuries mainly to the driver’s or front passenger’s chest. The SRS curtain shield airbags help reduce injuries mainly to the driver’s, front passenger’s or rear/second passenger’s head and help prevent them from being thrown out of the vehicle.

The SRS side airbag on the passenger seat will not activate if there is no passenger sitting in the front passenger seat. However, the side airbag on the passenger seat may deploy if luggage is put in the seat, or the seat belt is buckled up regardless of the presence of the occupant in the seat. (As for the front passenger occupant classification system, see “—Front passenger occupant classification system” on page 81 in this Section.)

The SRS curtain shield airbag on the passenger side are activated even with no passenger in the front seat or rear/second outside seat.

Roll sensing function:
In response to a vehicle rollover, the curtain shield airbags on both sides work with the seat belts to help reduce injury by inflating. The curtain shield airbags help reduce injuries mainly to the driver’s, front passenger’s or rear/second passenger’s head and help prevent them from being thrown out of the vehicle.

The SRS curtain shield airbags may activate even when the side airbags are not activated.

Always wear your seat belt properly.

CAUTION

- **The SRS side airbag and curtain shield airbag system is designed only as a supplement to the primary protection of the driver, front passenger and rear/second outside passenger seat belt systems. To ensure maximum protection in an accident, the driver and all passengers in the vehicle must wear their seat belts properly. Wearing a seat belt properly during an accident reduces the chances of death or serious injury or being thrown out of the vehicle. For instructions and precautions concerning the seat belt system, see “Seat belts” on page 53 in this Section.**

- **Do not allow anyone to lean his/her head or any part of his/her body against the door or the area of the seat, front pillar, rear pillar or roof side rails from which the SRS side airbag and curtain shield airbag deploy even if he/she is a child seated in the child restraint system. It is dangerous if the SRS side airbag and curtain shield airbag inflate, and the impact of the deploying airbag could cause death or serious injury to the occupant.**

- **Improperly seated and/or restrained infants and children can be killed or seriously injured by the deploying airbags. An infant or child who is too small to use a seat belt should be properly secured using a child restraint system. Toyota strongly recommends that all infants and children be placed in the rear seats of the vehicle and properly restrained. The rear seats are the safest for infants and children. For instructions concerning the installation of a child restraint system, see “Child restraint” on page 85 in this Section.**

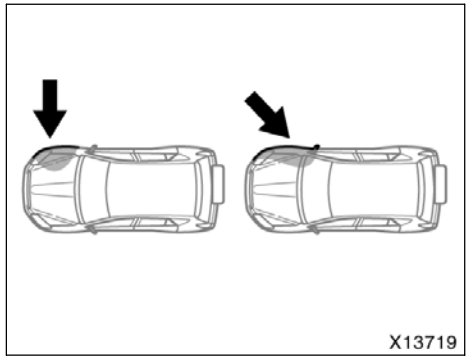

The SRS side airbag and curtain shield airbag system may not activate if the vehicle is subjected to a collision from the side at certain angles, or a collision to the side of the vehicle body other than the passenger compartment as shown in the illustration.

The SRS side airbags are designed to inflate when the passenger compartment area suffers a severe impact from the side.

Always wear your seat belts properly.

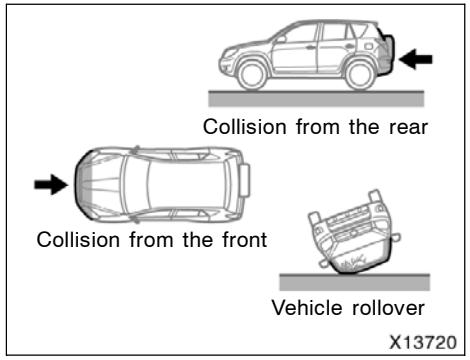

The SRS side airbags are not generally designed to inflate if the vehicle is involved in a front or rear collision, if it rolls over, or if it is involved in a low–speed side collision.

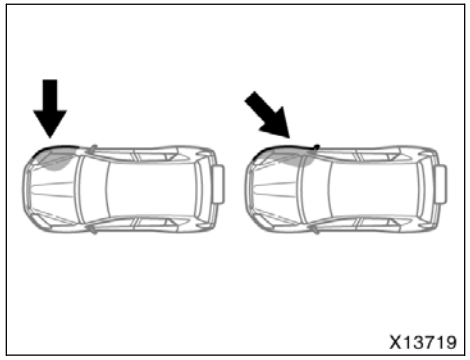

The curtain shield airbags may not activate if the vehicle is subjected to a collision from the side at certain angles, or a collision to the side of the vehicle body other than the passenger compartment as shown in the illustration.

The curtain shield airbags are designed to inflate when the passenger compartment area suffers a severe impact from the side or vehicle rollover.

Always wear your seat belts properly.

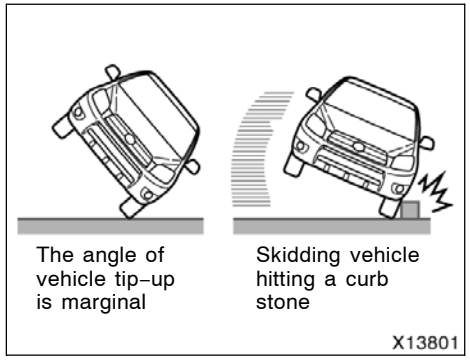

The curtain shield airbags may inflate if the angle of vehicle tip–up is marginal or if the skidding vehicle’s tires hit a curb stone laterally as shown in the illustration.

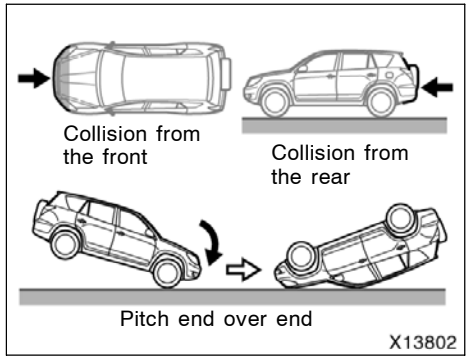

The curtain shield airbags are not generally designed to inflate if the vehicle is involved in a front or rear collision, if it pitches end over end, or if it is involved in a low–speed side collision.

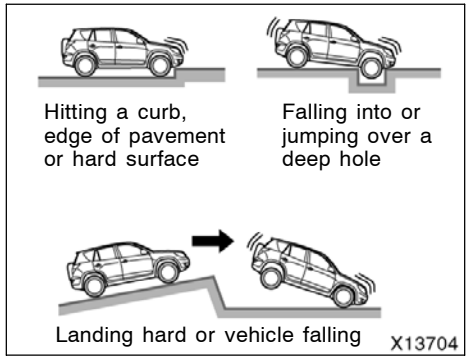

The SRS side and curtain shield airbags may deploy if a serious impact occurs to the underside of your vehicle. Some examples are shown in the illustration.

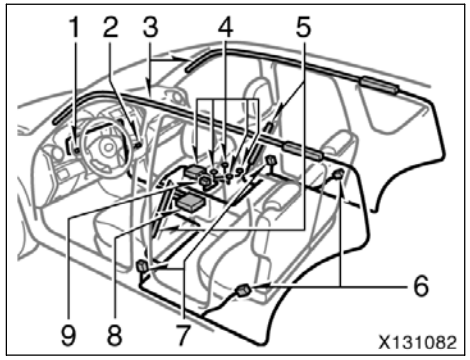

The SRS side airbag and curtain shield airbag system consists mainly of the following components, and their locations are shown in the illustration.

1. SRS warning light
2. “AIR BAG ON” and “AIR BAG OFF” indicator lights
3. Curtain shield airbag modules (airbag and inflator)
4. Front passenger occupant classification system (ECU and sensors)
5. Side airbag modules (airbag and inflator)
6. Curtain shield airbag sensors
7. Side and curtain shield airbag sensors
8. Airbag sensor assembly
9. Front passenger’s seat belt buckle switch

The SRS side airbag and curtain shield airbag system is controlled by the airbag sensor assembly. The airbag sensor assembly consists of a safing sensor and airbag sensor.

In a severe side impact, the side and curtain shield airbag sensor and/or the curtain shield airbag sensor trigger(s) the side airbag inflators and/or the curtain shield airbag inflators. At this time a chemical reaction in the inflators quickly fills the airbags with non–toxic gas to help restrain the lateral motion of the occupants.

In a vehicle rollover, the airbag sensor assembly triggers the curtain shield airbag inflator. At this time, a chemical reaction in the inflators quickly fills the airbags with non–toxic gas to help restrain the lateral motion of the occupants.

When the airbags inflate, they produce a fairly loud noise and release some smoke and residue along with non–toxic gas. This does not indicate a fire. This smoke may remain inside the vehicle for some time, and may cause some minor irritation to the eyes, skin or breathing. Be sure to wash off any residue as soon as possible to prevent any potential skin irritation with soap and water. If you can safely exit from the vehicle, you should do so immediately.

Deployment of the airbags happens in a fraction of a second, so the airbags must inflate with considerable force. While the system is designed to reduce serious injuries, it may also cause minor burns or abrasions and swelling.

Front seats as well as parts of the front and rear pillars, front, center and rear garnish and roof interior may be hot for several minutes, but the airbags themselves will not be hot. The airbags are designed to inflate only once.

⚠ CAUTION

SRS side airbags and curtain shield airbags inflate with considerable force. To reduce the possibility of death or serious injury when they inflate, the driver, front passenger and rear/second outside passengers must:

- **Wear their seat belts properly.**
- **Remain properly seated with their backs upright and against the seats at all times.**

Improper sitting and wearing of the seat belts may not retain you inside the vehicle.

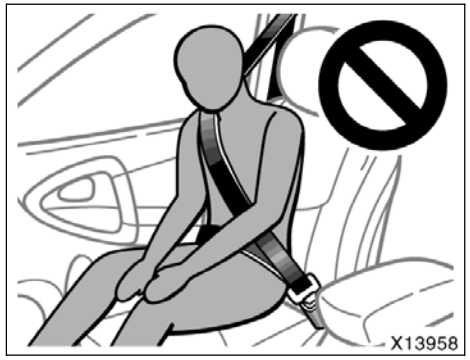

- **Do not allow anyone to lean against the door when the vehicle is in use, since the side airbag and curtain shield airbag could inflate with considerable speed and force. Otherwise, he/she may be killed or seriously injured. Special care should be taken especially when you have a small child in the vehicle.**
- **Sit up straight and well back in the seat, distributing your weight evenly in the seat. Do not apply excessive weight to the outer side of the seats with a side airbag, and to the front pillar, rear pillar and roof side rail with a curtain shield airbag.**

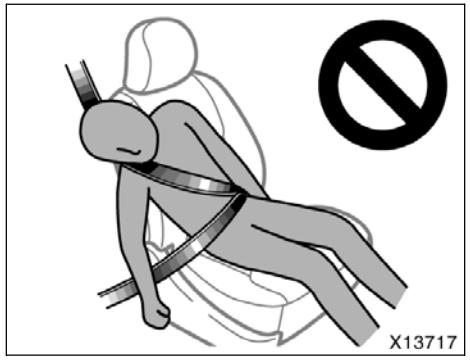

- **Do not allow anyone to get his/her head closer to the area where the side airbag and curtain shield airbag inflate, since these airbags could inflate with considerable speed and force. Otherwise, he/she may be killed or seriously injured. Special care should be taken especially when you have a small child in the vehicle.**

- **Do not allow anyone to kneel on the passenger seat, facing the passenger’s side door, since the side airbag and curtain shield airbag could inflate with considerable speed and force. Otherwise, he/she may be killed or seriously injured. Special care should be taken especially when you have a small child in the vehicle.**

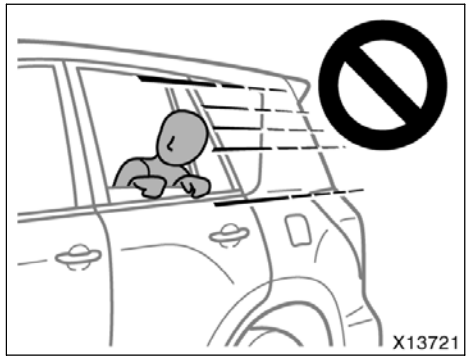

- **Do not allow anyone to get his/her head or hands out of windows since the curtain shield airbags could inflate with considerable speed and force. Otherwise, he/she may be killed or seriously injured. Special care should be taken especially when you have a small child in the vehicle.**

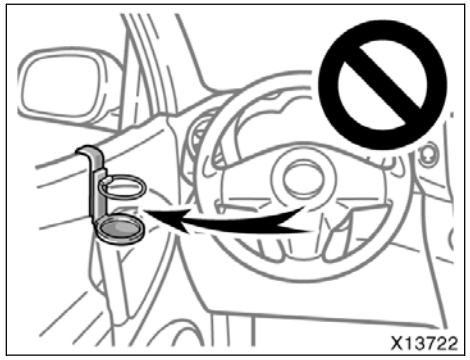

- **Do not attach a cup holder or any other device or object on or around the door. When the side airbag inflates, the cup holder or any other device or object will be thrown with great force or the side airbag may not activate correctly, resulting in death or serious injury. Likewise, the driver and front passenger should not hold objects in their arms or on their knees.**

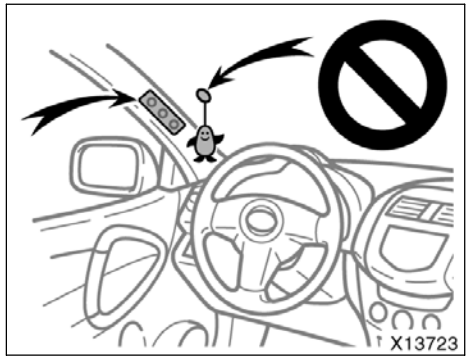

- **Do not attach a microphone or any other device or object near the area where the curtain shield airbag activates such as on the windshield glass, side door glass, front, center and roof side garnish. When the curtain shield airbag inflates, the microphone or other device or object will be thrown away with great force or the curtain shield airbag may not activate correctly, resulting in death or serious injury.**

- **Do not hook a hanger, heavy or sharp pointed objects on the coat hook. If the curtain shield airbag inflates, those items will be thrown away with great force or the curtain shield airbag may not activate correctly, resulting in death or serious injury. When you hang clothes, hang them on the coat hook directly.**
- **Do not use seat accessories which cover the parts where the side airbags inflate. Such accessories may prevent the side airbags from activating correctly, causing death or serious injury.**
- **Do not modify or replace the seats or upholstery of the seats with side airbags. Such changes may prevent the side airbag system from activating correctly, disable the system or cause the side airbags to inflate accidentally, resulting in death or serious injury.**

- **Do not disassemble or repair the front, center and roof side garnish containing the curtain shield airbags. Such changes may disable the system or cause the curtain shield airbags to inflate accidentally, resulting in death or serious injury.**
- **Do not modify or change the suspension system. Such changes may cause the curtain shield airbags to inflate accidentally, which could result in death or serious injury.**
- **Do not use tires or wheels other than the manufacturer’s recommended size. Such a use may cause the curtain shield airbags to inflate accidentally, which could result in death or serious injury. For details, see “Checking and replacing tires” on page 410 in Section 7–2.**
- **Do not place luggage heavier than specified on the roof luggage carrier. Such luggage may cause the curtain shield airbags to inflate accidentally, which could result in death or serious injury. For details, see “Roof luggage carrier” on page 303 in Section 1–10.**

Failure to follow these instructions can result in death or serious injury. Consult your Toyota dealer about any repair and modification.

If you wish to modify your vehicle for a person with physical disability, consult your Toyota dealer. It may dangerously interfere with the SRS side airbags and curtain shield airbags operation.

NOTICE

Do not perform any of the following changes without consulting your Toyota dealer. Such changes can interfere with proper operation of the SRS side airbag and curtain shield airbag system in some cases.

- ***Installation of electronic devices such as a mobile two–way radio, cassette tape player or compact disc player***
- ***Modification of the suspension system***
- ***Modification of the side structure of the passenger compartment***
- ***Repairs made on or near the console or front seat***

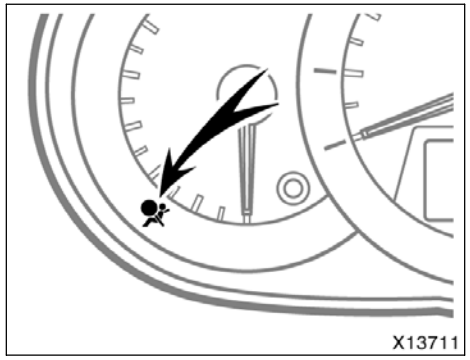

This indicator comes on when the engine switch is turned to the “ON” position. It goes off after about 6 seconds. This means the SRS side airbags and curtain shield airbags are operating properly.

This warning light system monitors the airbag sensor assembly, front airbag sensors, side and curtain shield airbag sensors, curtain shield airbag sensors, driver’s seat position sensor, driver’s seat belt buckle switch, “AIR BAG ON” indicator light, “AIR BAG OFF” indicator light, front passenger’s seat belt buckle switch, seat belt pretensioner assemblies, inflators, interconnecting wiring and power sources. (For details, see “Service reminder indicators and warning buzzers” on page 129 in Section 1–6.)

If either of the following conditions occurs, this indicates a malfunction of the airbags or seat belt pretensioners. Contact your Toyota dealer as soon as possible.

- The light does not come on when the engine switch is turned to the “ON” position or remains on for more than 6 seconds.
- The light comes on while driving.

The SRS warning light and “AIR BAG OFF” indicator light will come on if there is a malfunction in the front passenger occupant classification system.

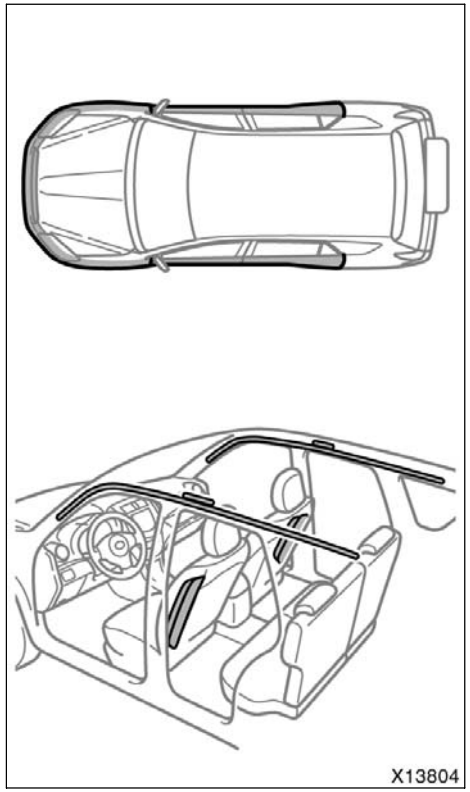

In the following cases, contact your Toyota dealer as soon as possible:

- Any of the SRS side airbags and curtain shield airbags have been inflated.
- The portion of the doors (shaded in the illustration) was involved in an accident that was not severe enough to cause the SRS side airbags and curtain shield airbags to inflate.
- The surface of the seats with the side airbag (shaded in the illustration) is scratched, cracked, or otherwise damaged.
- The portion of the front, center and roof side garnish containing the curtain shield airbags inside (shaded in the illustration) is scratched, cracked, or otherwise damaged.

NOTICE

Do not disconnect the battery cables before contacting your Toyota dealer.

—Front passenger occupant classification system

Your vehicle is equipped with a front passenger occupant classification system. This system detects the conditions 1—4 in the table on page 83 and based on these conditions activates or deactivates the following systems;

- Front passenger airbag
- Side airbag on the front passenger seat
- Front passenger’s seat belt pretensioner

The system monitors the weight and load on the front passenger seat, and the seat belt buckle switch to determine conditions 1—4.

In order for the system to detect the conditions correctly, do not do any of the following:

- Apply a heavy load to the front passenger seat or equipment (e.g. seatback pocket).
- Attach a commercial seatback table, etc. to the front passenger seatback.
- Put weight on the front passenger seat by putting your hands or feet on the seatback from the rear passenger seat.

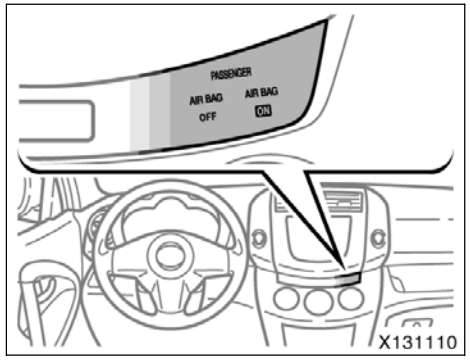

The “AIR BAG ON” and “AIR BAG OFF” indicator lights indicate the actuation of the front passenger airbag, side airbag on the front passenger seat and front passenger’s seat belt pretensioner.

The “AIR BAG OFF” indicator light will be illuminated when the engine switch is in the “ON” position with the condition 2 in the table shown below.

If the front passenger occupant classification system determines that a person of adult size sits in the front passenger seat but the “AIR BAG OFF” indicator light is illuminated, one of the following is likely to have occurred:

- A rear passenger lifts the front passenger seat cushion with their legs.
- Objects are placed under the front passenger seat.
- The front passenger seatback is in contact with the rear/second seat.

To ensure the system correctly detects an adult sitting in the front passenger seat, make sure the above do not occur.

Make sure that the “AIR BAG ON” indicator light is illuminated when an adult is seated in the front passenger seat. If the “AIR BAG OFF” indicator light is illuminated, ask the passenger to sit up straight, well back in the seat, and with the seat belt worn correctly. If the “AIR BAG OFF” indicator light still remains illuminated, either ask the passenger to move to the rear seat, or if that is not possible, move the front passenger seat fully rearward.

The “AIR BAG ON” and “AIR BAG OFF” indicator lights will be illuminated initially when the engine switch is turned to the “ON” position. After about four seconds, they will go off. After that, the front passenger occupant classification system operates and judges which indicator light be illuminated.

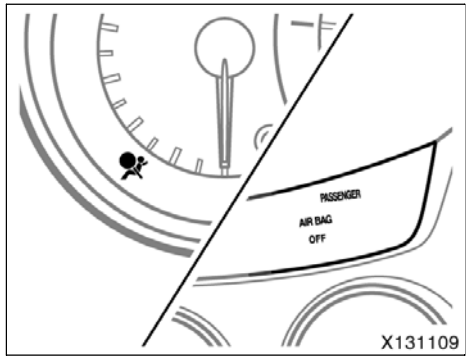

The SRS warning light and “AIR BAG OFF” indicator light will come on if there is a malfunction in the front passenger occupant classification system.

Condition and operation in the front passenger occupant classification system

<table>
<tr><th rowspan="2">Condition detected by the front passenger occupant classification system</th><th colspan="3">Indicator/warning light</th><th colspan="4">Devices</th></tr>
<tr><th>“AIR BAG ON” and “AIR BAG OFF” indicator lights</th><th>SRS warning light</th><th>Front passenger’s seat belt reminder light</th><th>Front passenger airbag</th><th>Side airbag on the front passenger seat</th><th>Curtain shield airbag in the front passenger side</th><th>Front passenger’s seat belt pretensioner</th></tr>
<tr><td>1. Adult*1</td><td>“AIR BAG ON”</td><td>Off</td><td>Flashing*4</td><td colspan="4">Activated</td></tr>
<tr><td>2. Child*2 or child restraint system*3</td><td>“AIR BAG OFF”*5</td><td>Off</td><td>Flashing*4</td><td colspan="2">Deactivated</td><td rowspan="3">Activated</td><td>Activated</td></tr>
<tr><td>3. Unoccupied</td><td>Not illuminated</td><td>Off</td><td>Off</td><td colspan="2">Deactivated</td><td>Deactivated</td></tr>
<tr><td>4. There is a malfunction in the system</td><td>“AIR BAG OFF”</td><td>On</td><td>Off</td><td colspan="2">Deactivated</td><td>Activated</td></tr>
</table>

*1: The system judges a person of adult size as an adult. When a smaller adult sits in the front passenger seat, the system may recognize him/her as a child depending on his/her physique and posture.
*2: When a larger child who has outgrown a child restraint system sits in the front passenger seat, the system may recognize him/her as an adult depending on his/her physique or posture.
*3: Never install a rear–facing child restraint system on the front passenger seat. A forward–facing child restraint system should only be installed on the front passenger seat when it is unavoidable. (See “Child restraint” on page 85 in this Section as for installing the child restraint system.)
*4: In the event the front passenger does not wear a seat belt.
*5: In case the indicator is not illuminated, see “Child restraint” on page 85 as for installing the child restraint system properly.

⚠ CAUTION

To avoid potential death or serious injury when the front passenger occupant classification system does not detect the conditions correctly, observe the following.

- **Make sure the “AIR BAG ON” indicator light is illuminated when using the seat belt extender for the front passenger seat. If the “AIR BAG OFF” indicator light is illuminated, disconnect the extender tongue from the seat belt buckle, then reconnect the seat belt. Reconnect the seat belt extender after making sure the “AIR BAG ON” indicator light is illuminated. If you use the seat belt extender while the “AIR BAG OFF” indicator light is illuminated, the front passenger airbag and side airbag on the front passenger side may not activate correctly, which could cause death or serious injury in the event of collision.**
- **Do not recline the front passenger seatback so far that it touches a rear/second seat. This may cause the “AIR BAG OFF” indicator to be illuminated, which indicates that the passenger’s airbags will not deploy in the event of a severe accident. If the seatback touches the rear/second seat, return the seatback to a position where it does not touches the rear/second seat.**

  Keep the front passenger seatback as upright as possible when the vehicle is moving. Reclining the seatback excessively may lessen the effectiveness of the seat belt system.
- **If an adult sits in the front passenger seat, the “AIR BAG ON” indicator light should be illuminated. If the “AIR BAG OFF” indicator is illuminated, ask the passenger to sit up straight, well back in the seat, feet on the floor, and with the seat belt worn correctly. If the “AIR BAG OFF” indicator still remains illuminated, either ask the passenger to move to the rear/second seat, or if that is not possible, move the front passenger seat fully rearward.**
- **Wear the seat belt properly.**
- **Make sure the front passenger’s seat belt tab has not been left inserted into the buckle before someone sits in the front passenger seat.**
- **Do not apply a heavy load to the front passenger seat or equipment (e.g. seatback pocket).**
- **Do not put weight on the front passenger seat by putting your hands or feet on the front passenger seat seatback from the rear/second passenger seat.**
- **Do not let a rear/second passenger lift the front passenger seat with their feet or press on the seatback with their legs.**
- **Do not put objects under the front passenger seat.**
- **Child restraint systems installed on the rear/second seat should not contact the front seatbacks.**

- **When it is unavoidable to install the forward–facing child restraint system on the front passenger seat, install the child restraint system on the front passenger seat in the proper order. (As for the installation order, see “—Installation with seat belt” on page 88 in this Section.)**
- **Do not remove the front seats.**
- **Do not kick the front passenger seat or subject it to severe impact. Otherwise, the SRS warning light may come on to indicate a malfunction of the detection system. In this case, contact your Toyota dealer immediately.**

The “AIR BAG ON” indicator light may be illuminated (the front passenger airbag and side airbag on the front passenger seat may deploy) even if observing the above cautions, when a child sits in, or a forward–facing child restraint system is installed on the front passenger seat. Refer to all the cautions in “SRS airbags” on page 65 and “Child restraint” on page 85 in this Section.

Child restraint—
—Child restraint precautions

Toyota strongly urges the use of appropriate child restraint systems for children.

The laws of all 50 states in the U.S.A. and Canada now require the use of a child restraint system.

Your vehicle conforms to SAEJ1819.

If a child is too large for a child restraint system, the child should sit in the rear seat and must be restrained using the vehicle’s seat belt. See “Seat belts” on page 53 in this Section for details.

⚠ CAUTION

- **For effective protection in automobile accidents and sudden stops, a child must be properly restrained, using a seat belt or child restraint system depending on the age and size of the child. Holding a child in your arms is not a substitute for a child restraint system. In an accident, the child can be crushed against the windshield, or between you and the vehicle’s interior.**

- **Toyota strongly urges use of a proper child restraint system which conforms to the size of the child, installed on the rear seat. According to accident statistics, the child is safer when properly restrained in the rear seat than in the front seat.**
- **Never install a rear–facing child restraint system on the front passenger seat even if the “AIR BAG OFF” indicator light is illuminated. In the event of an accident, the force of the rapid inflation of the front passenger airbag can cause death or serious injury to the child if the rear–facing child restraint system is installed on the front passenger seat.**

- **A forward–facing child restraint system should be allowed to be installed on the front passenger seat only when it is unavoidable. Always move the seat as far back as possible even if the “AIR BAG OFF” indicator light is illuminated, because the front passenger airbag could inflate with considerable speed and force. Otherwise, the child may be killed or seriously injured.**
- **On vehicles with side airbags and curtain shield airbags, do not allow the child to lean his/her head or any part of his/her body against the door or the area of the seat, front or center and roof side garnish from which the side airbags or curtain shield airbags deploy even if the child is seated in the child restraint system. It is dangerous if the side airbag and/or curtain shield airbag inflate, and the impact could cause death or serious injury to the child.**

- **Do not use the seat belt extender when installing a child restraint system on the front or rear passenger seat. If installing a child restraint system with the seat belt extender connected to the seat belt, the seat belt will not securely hold the child restraint system, which could cause death or serious injury to the child or other passengers in the event of collision.**
- **Make sure you have complied with all installation instructions provided by the child restraint manufacturer and that the system is properly secured. If it is not secured properly, it may cause death or serious injury to the child in the event of a sudden stop or accident.**

—Child restraint system

A child restraint system for a small child or baby must itself be properly restrained on the seat with the lap portion of the lap/shoulder belt. You must carefully consult the manufacturer’s instructions which accompany the child restraint system.

To provide proper restraint, use a child restraint system following the manufacturer’s instructions about the appropriate age and size of the child for the child restraint system.

Install the child restraint system correctly following the instructions provided by its manufacturer. General directions are also provided under the following illustrations.

The child restraint system should be installed on the rear seat. According to accident statistics, the child is safer when properly restrained in the rear seat than in the front seat.

CAUTION

When the child restraint system is not in use:

- **Keep the child restraint system properly secured on the seat even if it is not in use. Do not store the restraint unsecured in the passenger compartment.**
- **If it is necessary to detach the child restraint system, remove it from the vehicle or store it securely in the luggage compartment. This will prevent it from injuring passengers in the event of a sudden stop or accident.**

—Types of child restraint system

Child restraint systems are classified into the following 3 types depending on the child’s age and size.

(A) Infant seat
(B) Convertible seat
(C) Booster seat

Install the child restraint system following the instructions provided by its manufacturer.

Your vehicle has anchor brackets for securing the top strap of a child restraint system.

For instructions about how to use the anchor bracket, see “—Using a top strap” on page 100 in this Section.

The child restraint lower anchorages approved for your vehicle may also be used. See “—Installation with child restraint lower anchorages” on page 104 in this Section.

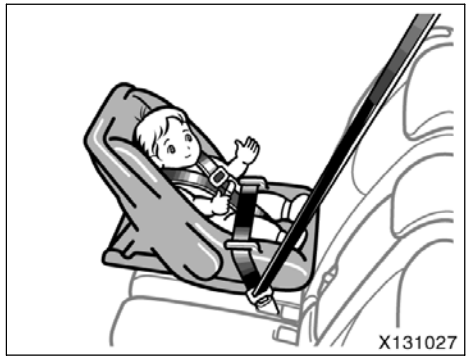

(A) Infant seat

(B) Convertible seat

—Installation with seat belt

(C) Booster seat

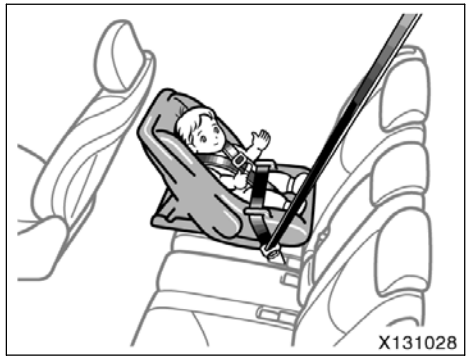

(A) INFANT SEAT INSTALLATION

An infant seat must be used in rear–facing position only.

⚠ CAUTION

- Never install a rear–facing child restraint system on the front passenger seat even if the “AIR BAG OFF” indicator light is illuminated. In the event of an accident, the force of the rapid inflation of the front passenger airbag can cause death or serious injury to the child if the rear–facing child restraint system is installed on the front passenger seat.

- **Do not install a child restraint system on the rear/second or third seat if it interferes with the lock mechanism of the front or second seats. Otherwise, the child or front or second seat occupant(s) may be killed or seriously injured in case of sudden braking or a collision.**
- **If the driver’s seat position does not allow sufficient space for safe installation, install the child restraint system on the rear right seat.**

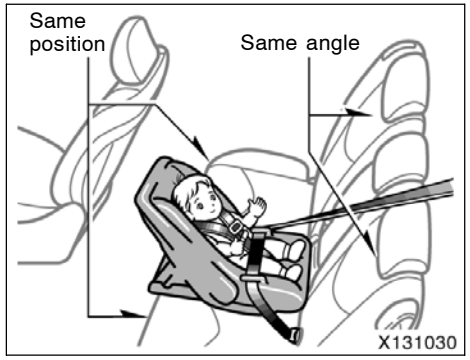

- **When installing a child restraint system on the rear/second center position, adjust both seat cushions to the same position and align all seatbacks at the same angle. Otherwise, the child restraint system cannot be securely restrained and this may cause death or serious injuries in a collision.**

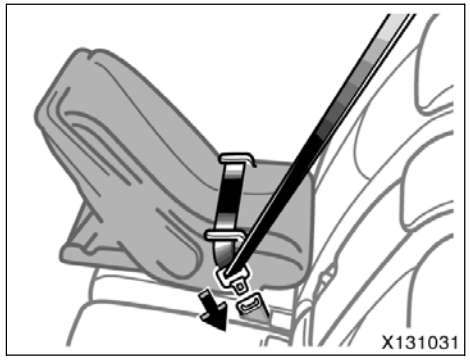

To install the infant seat:

1. Run the lap and shoulder belt through or around the infant seat following the instructions provided by its manufacturer and insert the tab into the buckle taking care not to twist the belt. Keep the lap portion of the belt tight.

⚠ CAUTION

- **After inserting the tab, make sure the tab and buckle are locked and that the lap and shoulder portions of the belt are not twisted.**
- **Do not insert coins, clips, etc. in the buckle as this may prevent your child from properly latching the tab and buckle.**
- **If the seat belt does not function normally, it cannot protect your child from death or serious injury. Contact your Toyota dealer immediately. Do not install the child restraint system on the seat until the seat belt is fixed.**

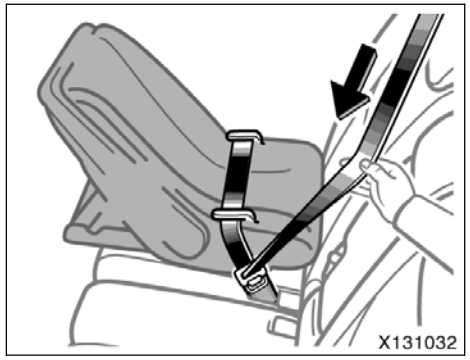

2. Fully extend the shoulder belt to put it in the lock mode. When the belt is then retracted even slightly, it cannot be extended.

To hold the infant seat securely, make sure the belt is in the lock mode before letting the belt retract.

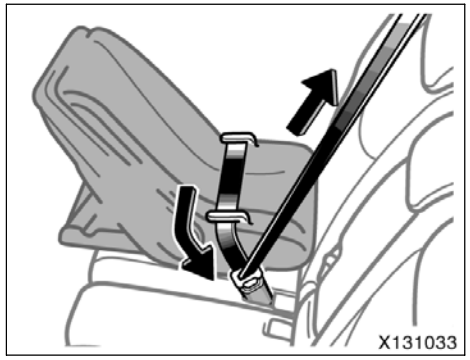

3. While pressing the infant seat firmly against the seat cushion and seatback, let the shoulder belt retract as far as it will go to hold the infant seat securely.

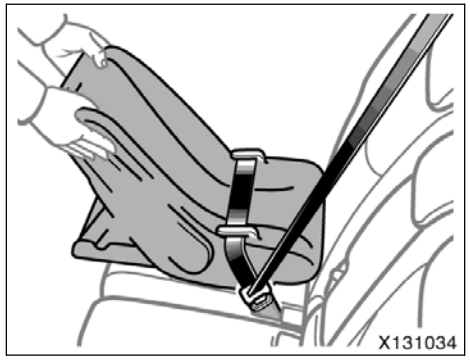

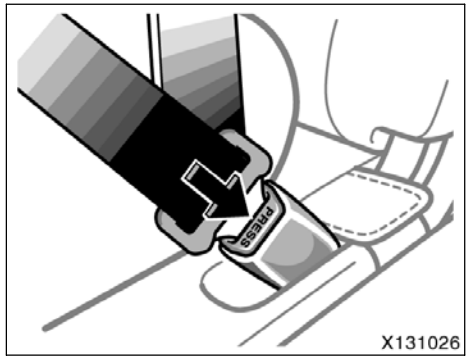

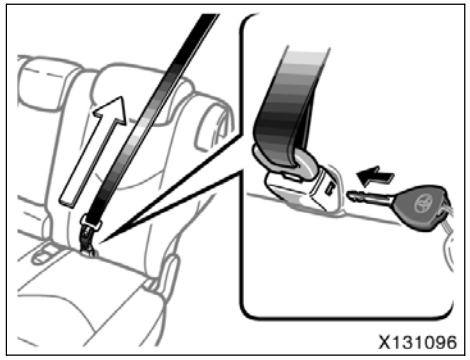

⚠ CAUTION

Push and pull the child restraint system in different directions to be sure it is secure. Follow all the installation instructions provided by its manufacturer.

To remove the infant seat:

Press the buckle release button and allow the belt to retract completely. The belt will move freely again and be ready to work for an adult or older child passenger.

Rear/second center seat: If the seat in which a child restraint system is installed in the rear most position, release the center seat belt after removing the child restraint system. Otherwise, the rear center seat belt may not work properly.

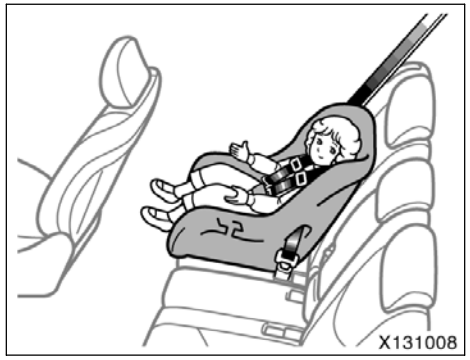

(B) CONVERTIBLE SEAT INSTALLATION

A convertible seat must be used in forward–facing or rear–facing position depending on the age and size of the child. When installing, follow the manufacturer’s instructions about the applicable age and size of the child as well as directions for installing the child restraint system.

Install the child restraint system on the front passenger seat only when it is unavoidable. Your vehicle is equipped with a front passenger occupant classification system. In order to activate the occupant classification system correctly, install the forward–facing child restraint system on the front passenger seat in the following order:

1. Turn the engine switch to the “ON” position.
2. Move the front passenger seat to the rearward position.
3. Put the child restraint system on the front passenger seat without putting your weight on the front passenger seat.
4. Insert the seat belt tab into the seat belt buckle.
5. Fully extend the shoulder belt to put it in the lock mode. When the belt is then retracted even slightly, it cannot be extended. To hold the seat securely, make sure the belt is in the lock mode before letting the belt retract.
6. While pressing the convertible seat firmly against the seat cushion and seatback, let the shoulder belt retract as far as it will go to hold the convertible seat securely.

⚠ CAUTION

Push and pull the child restraint system in different directions to be sure it is secure. Follow all the installation instructions provided by its manufacturer.

7. Put a child on the child restraint system and secure the child, complying with the instructions provided by the child restraint system manufacturer.

The “AIR BAG OFF” indicator light should be illuminated when the engine switch is in the “ON” position and the child is in the child restraint system after following these procedures. The “AIR BAG OFF” indicator light indicates the SRS front passenger airbag and side airbag on the passenger side will not deploy. If the “AIR BAG ON” indicator light is illuminated, remove the child restraint system and reinstall it with the engine switch in the “ACC” or “LOCK” position. If the “AIR BAG ON” indicator light is illuminated when the engine switch is turned to the “ON” position, then the SRS front passenger airbag and side airbag on the passenger side may deploy in an accident. Do not drive the vehicle in this condition. Remove the child restraint system and contact your Toyota dealer.

CAUTION

- **Never install a rear–facing child restraint system on the front passenger seat. A forward–facing child restraint system should only be installed on the front passenger seat when unavoidable. If you must install the child restraint system on the front passenger seat, put the seat in its most rearward position, and install the forward–facing child restraint system in the proper order. Otherwise, the front passenger occupant classification system can not detect the presence of the child restraint system and the front passenger airbag and side airbag on the front passenger seat could deploy, and the impact could cause death or serious injury to the child.**

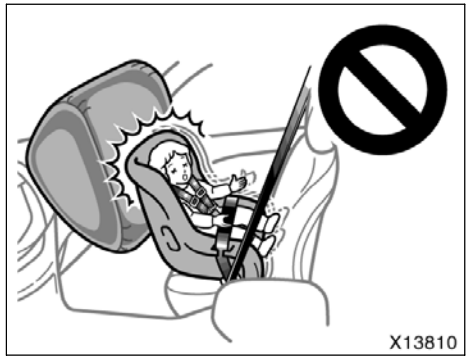

- **Never install a rear–facing child restraint system on the front passenger seat even if the “AIR BAG OFF” indicator light is illuminated. In the event of an accident, the impact of the rapid inflation of the front passenger airbag could cause death or serious injury to the child if the rear–facing child restraint system is installed on the front passenger seat.**

- **A forward–facing child restraint system should be allowed to be installed on the front passenger seat only when it is unavoidable. Always move the seat as far back as possible even if the “AIR BAG OFF” indicator light is illuminated, because the front passenger airbag could inflate with considerable speed and force. Otherwise, the child may be killed or seriously injured.**

- **On vehicles with side airbags and curtain shield airbags, do not allow the child to lean his/her head or any part of his/her body against the door or the area of the seat, front or center and roof side garnish from which the side airbags or curtain shield airbags deploy even if the child is seated in the child restraint system. It is dangerous if the side airbag and/or curtain shield airbag inflate, and the impact could cause death or serious injury to the child.**

- **Do not install a child restraint system on the rear/second or third seat if it interferes with the lock mechanism of the front or second seats. Otherwise, the child or front or second seat occupant(s) may be killed or seriously injured in case of sudden braking or a collision.**
- **If the driver’s seat position does not allow sufficient space for safe installation, install the child restraint system on the rear/second right seat.**

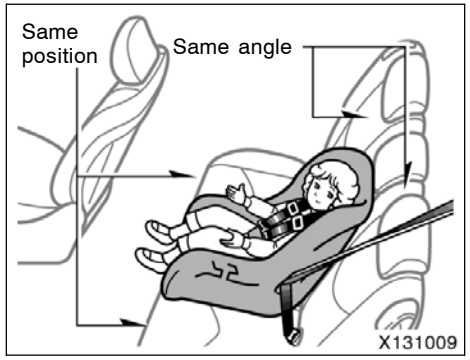

- **When installing a child restraint system on the rear/second center position, adjust both seat cushions to the same position and align all seatbacks at the same angle. Otherwise, the child restraint system cannot be securely restrained and this may cause death or serious injuries in a collision.**

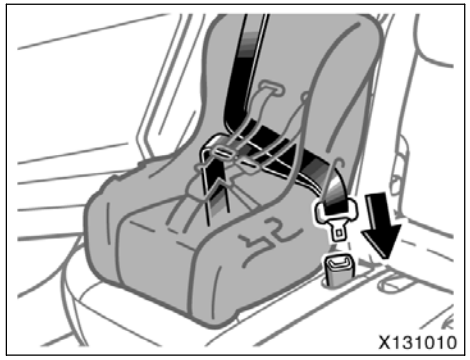

To install the convertible seat:

1. Run the lap and shoulder belt through or around the convertible seat following the instructions provided by its manufacturer and insert the tab into the buckle taking care not to twist the belt. Keep the lap portion of the belt tight.

⚠ CAUTION

- **After inserting the tab, make sure the tab and buckle are locked and that the lap and shoulder portions of the belt are not twisted.**
- **Do not insert coins, clips, etc. in the buckle as this may prevent your child from properly latching the tab and buckle.**
- **If the seat belt does not function normally, it cannot protect your child from death or serious injury. Contact your Toyota dealer immediately. Do not install the child restraint system on the seat until the seat belt is fixed.**

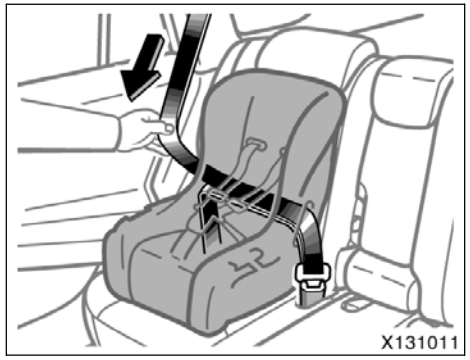

2. Fully extend the shoulder belt to put it in the lock mode. When the belt is then retracted even slightly, it cannot be extended.

To hold the convertible seat securely, make sure the belt is in the lock mode before letting the belt retract.

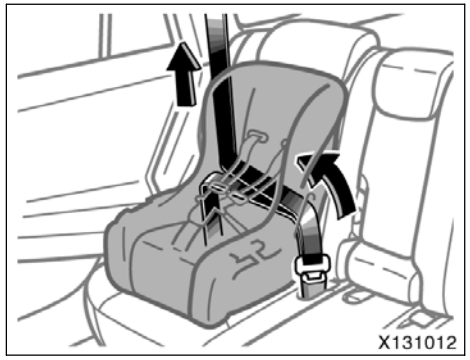

3. While pressing the convertible seat firmly against the seat cushion and seatback, let the shoulder belt retract as far as it will go to hold the convertible seat securely.

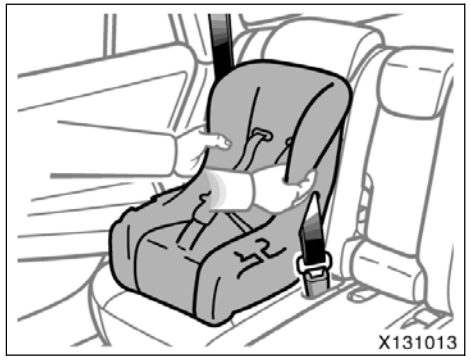

⚠ CAUTION

Push and pull the child restraint system in different directions to be sure it is secure. Follow all the installation instructions provided by its manufacturer.

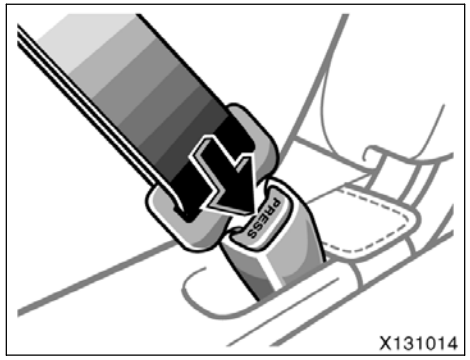

To remove the convertible seat:

Press the buckle release button and allow the belt to retract completely. The belt will move freely again and be ready to work for an adult or older child passenger.

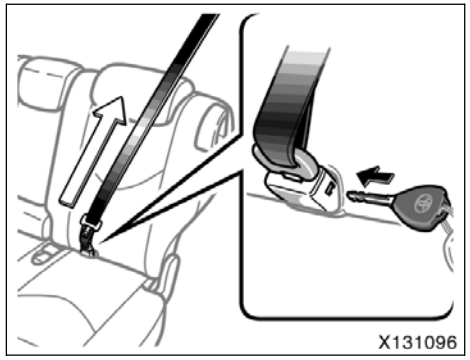

Rear/second center seat: If the seat in which a child restraint system is installed in the rear most position, release the center seat belt after removing the child restraint system. Otherwise, the rear center seat belt may not work properly.

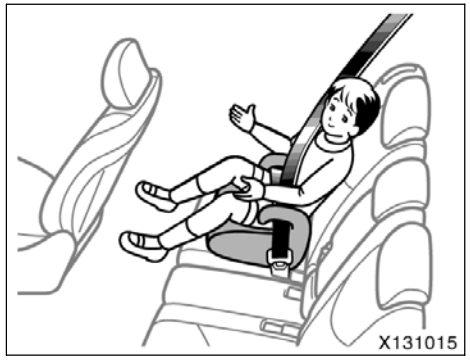

(C) BOOSTER SEAT INSTALLATION

A booster seat must be used in forward–facing position only.

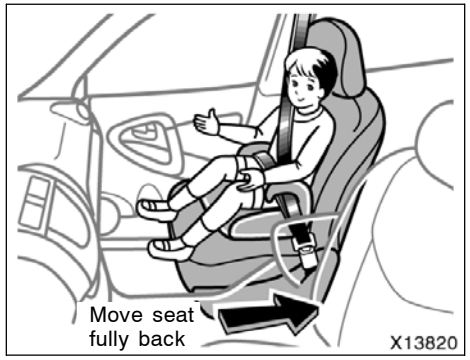

CAUTION

- **A forward–facing child restraint system should be allowed to be installed on the front passenger seat only when it is unavoidable. Always move the seat as far back as possible even if the “AIR BAG OFF” indicator light is illuminated, because the front passenger airbag could inflate with considerable speed and force. Otherwise, the child may be killed or seriously injured.**

- **On vehicles with side airbags and curtain shield airbags, do not allow the child to lean his/her head or any part of his/her body against the door or the area of the seat, front or center and roof side garnish from which the side airbags or curtain shield airbags deploy even if the child is seated in the child restraint system. It is dangerous if the side airbag and/or curtain shield airbag inflate, and the impact could cause death or serious injury to the child.**

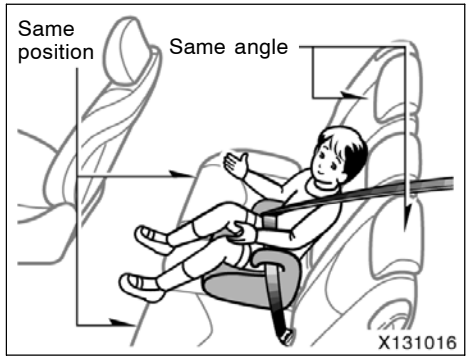

- **When installing a child restraint system on the rear/second center position, adjust both seat cushions to the same position and align all seatbacks at the same angle. Otherwise, the child restraint system cannot be securely restrained and this may cause death or serious injuries in a collision.**

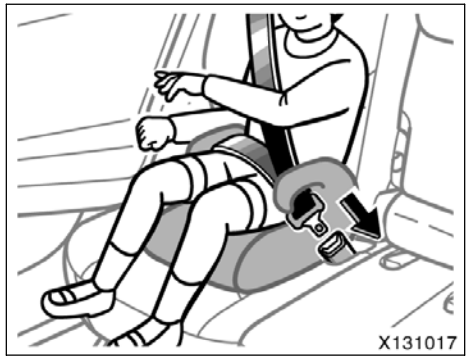

To install the booster seat:

Sit the child on a booster seat. Run the lap and shoulder belt through or around the booster seat and across the child following the instructions provided by its manufacturer and insert the tab into the buckle taking care not to twist the belt.

Make sure the shoulder belt is correctly across the child’s shoulder and that the lap belt is positioned as low as possible on the child’s hips. See “Seat belts” on page 53 in this Section for details.

⚠ CAUTION

- **Always make sure the shoulder belt is positioned across the center of child’s shoulder. The belt should be kept away from child’s neck, but not falling off child’s shoulder. Otherwise, the child may be killed or seriously injured in case of sudden braking or a collision.**
- **Both high–positioned lap belts and loose–fitting belts could cause death or serious injuries due to sliding under the lap belt during a collision or other unintended event. Keep the lap belt positioned as low on a child’s hips as possible.**
- **For child’s safety, do not place the shoulder belt under child’s arm.**
- **After inserting the tab, make sure the tab and buckle are locked and that the lap and shoulder portions of the belt are not twisted.**
- **Do not insert coins, clips, etc. in the buckle as this may prevent your child from properly latching the tab and buckle.**

- **If the seat belt does not function normally, it cannot protect your child from death or serious injury. Contact your Toyota dealer immediately. Do not install the child restraint system on the seat until the seat belt is fixed.**

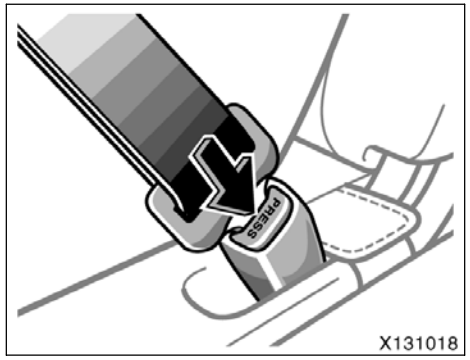

To remove the booster seat:

Press the buckle release button and allow the belt to retract.

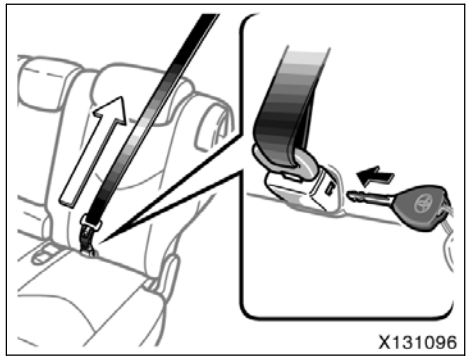

Rear/second center seat: If the seat in which a child restraint system is installed in the rear most position, release the center seat belt after removing the child restraint system. Otherwise, the rear center seat belt may not work properly.

—Using a top strap

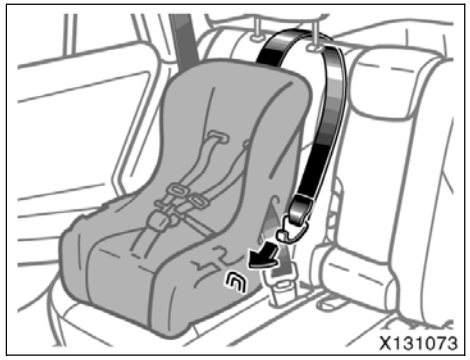

Outside position

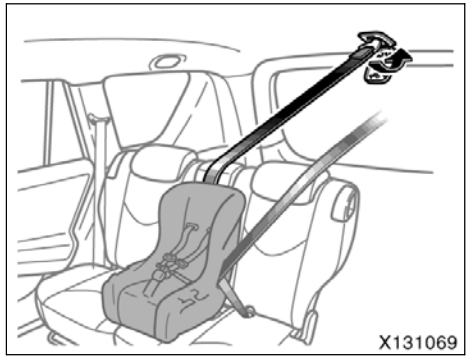

Center position

Follow the procedure below for a child restraint system that requires the use of a top strap.

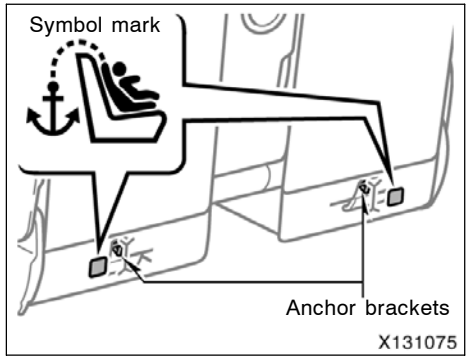

Outside position

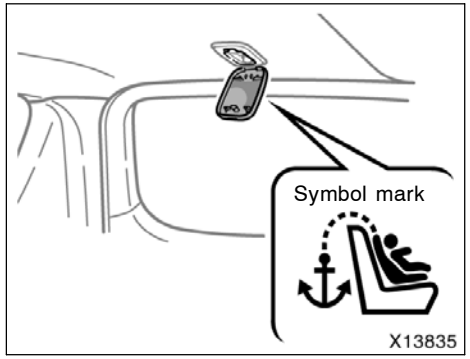

Center position

Use one anchor bracket on the roof and two anchor brackets on the rear/second seatbacks to attach the top strap.

Anchor brackets are installed for each rear/second seating position.

This symbol indicates the locations of the anchor brackets.

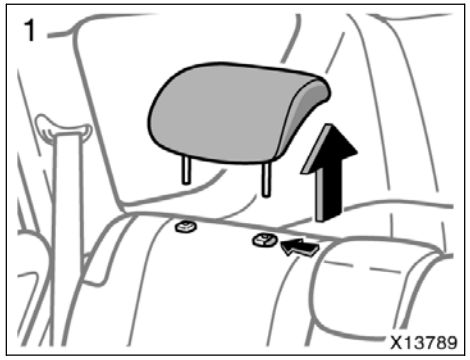

TO USE THE OUTSIDE ANCHOR BRACKET:

1. **Remove the head restraint.**

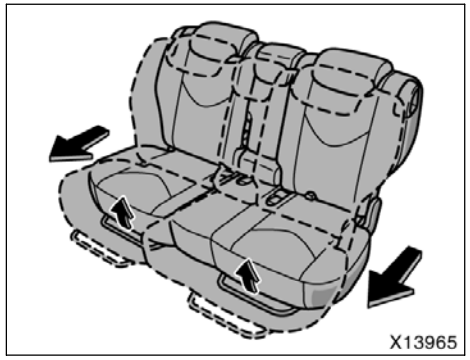

Hold the center of the lever and pull it up. Then slide the rear/second seats forward slightly if it is in the rear–most position.

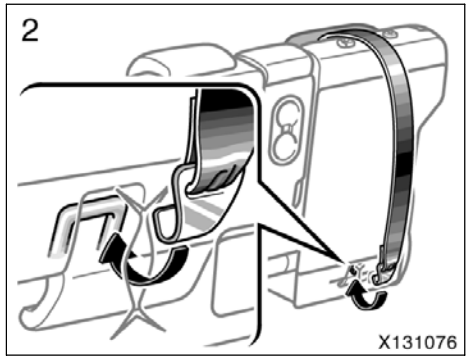

2. **Fix the child restraint system with the seat belt.**

   Widen the slit of the cover slightly and confirm the position of the anchor fitting. Latch the hook onto the anchor bracket and tighten the top strap.

For instructions to install the child restraint system, see “Child restraint” on page 85 in this Section.

⚠ CAUTION

Make sure the top strap is securely latched, and check that the child restraint system is secure by pushing and pulling it in different directions. Follow all the installation instructions provided by its manufacturer.

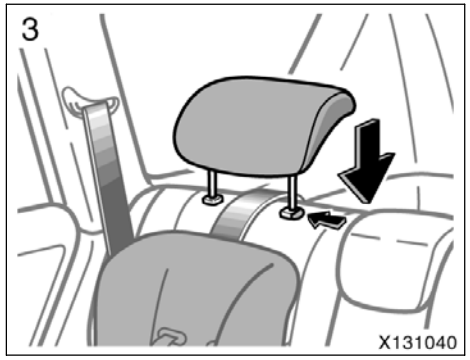

3. Insert the head restraint and push it down to the lock position.

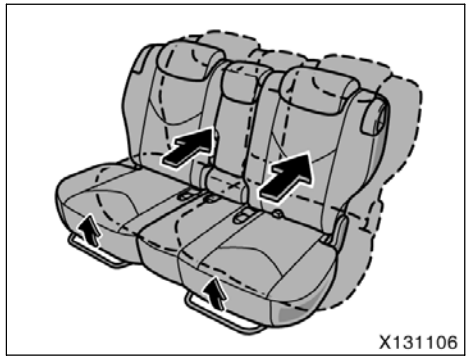

After installing the child restraint system, move the rear/second seat to the rear–most lock position to prevent the child restraint system from interfering with the front seat.

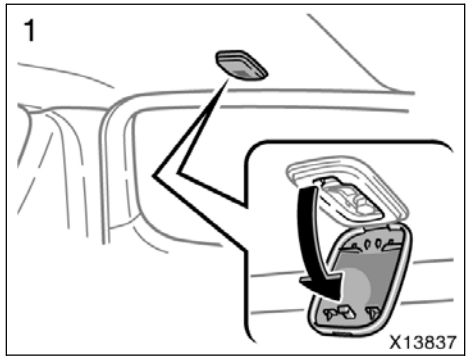

TO USE THE CENTER ANCHOR BRACKET:

1. **Open the lid of the anchor bracket.**

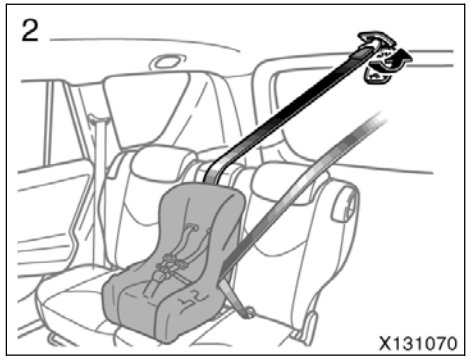

2. **Fix the child restraint system with the seat belt.**

   Latch the hook onto the anchor bracket and tighten the top strap.

For instructions to install the child restraint system, see “Child restraint” on page 85 in this Section.

⚠ CAUTION

Make sure the top strap is securely latched, and check that the child restraint system is secure by pushing and pulling it in different directions. Follow all the installation instructions provided by its manufacturer.

—Installation with child restraint lower anchorages

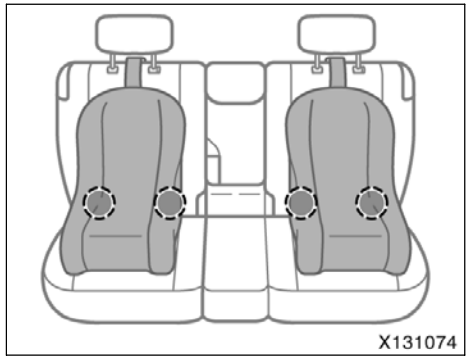

Lower anchorages for the child restraint systems complying with the FMVSS225 or CMVSS210.2 specifications are installed in the rear/second seat.

The anchorages are installed in the gap between the seat cushion and seatback of both outside rear/second seating position.

Child restraint systems complying with the FMVSS213 or CMVSS213 specification can be fixed to these anchorages. In this case, it is not necessary to fix the child restraint system with a seat belt on the vehicle.

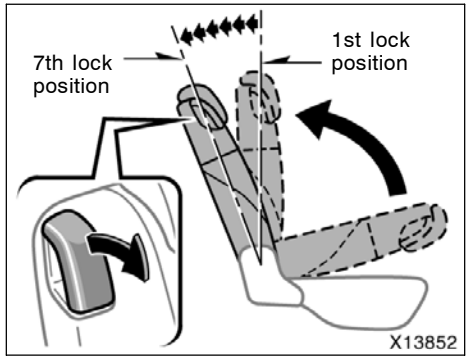

CHILD RESTRAINT SYSTEM INSTALLATION

1. **Fold down the seatback and back it to the 1st lock position (most upright position) until it locks into place. Adjust the seatback to the 7th lock position.**

Make sure the seatback is locked securely.

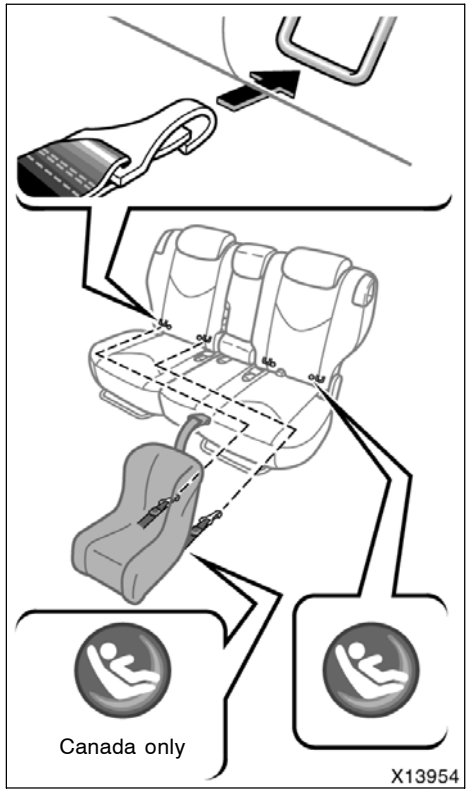

Type A

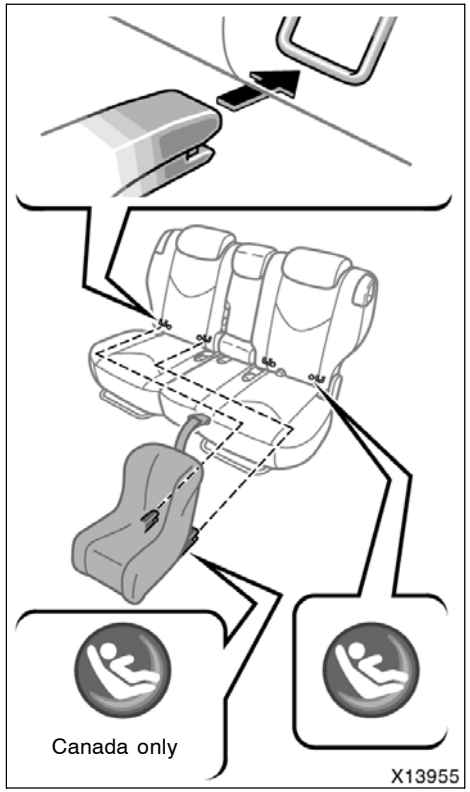

Type B

2. **Widen the gap between the seat cushion and seatback slightly and confirm the position of the lower anchorages near the buttons on the seatback.**
3. **Type A—Latch the hooks of lower straps onto the anchorages and tighten the lower straps.**

   Type B—Latch the buckles onto the anchorages.

For owners in Canada—The symbol on a child restraint system indicates the presence of a lower connector system.

If your child restraint system has a top strap, it should be anchored. (For the installation of the top strap, see “—Using a top strap” on page 100 in this Section.)

For installation details, refer to the instruction manual equipped with each product.

CAUTION

- **When using the lower anchorages for the child restraint system, be sure that there are no irregular objects around the anchorages or that the seat belt is not caught.**
- **Push and pull the child restraint system in different directions to be sure it is secure. Follow all the installation instructions provided by its manufacturer.**
- **When using the lower anchorages for the child restraint system, ensure that the seat is moved to the rear–most position, with the seatback close to the child restraint system.**
- **After securing the child restraint system, never slide or recline the seat.**
- **Do not install a child restraint system on the rear seat if it interferes with the lock mechanism of the front seats. Otherwise, the child or front seat occupant(s) may be killed or seriously injured in case of sudden braking or a collision.**

SECTION 1 – 4

OPERATION OF INSTRUMENTS AND CONTROLS

Steering wheel and Mirrors

Tilt and telescopic steering wheel 108
Outside rear view mirrors 108
Anti–glare inside rear view mirror 110
Sun visors 111

Tilt and telescopic steering wheel

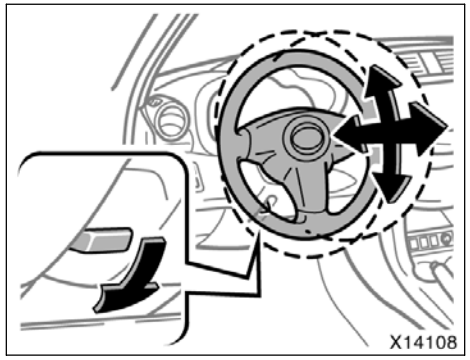

To adjust the steering wheel position, push down the lock release lever. Then tilt the steering wheel to the desired angle, push or pull it to the desired steering column length and return the lever to its original position.

⚠ CAUTION

- **Do not adjust the steering wheel while the vehicle is moving. Doing so may cause the driver to mishandle the vehicle and an accident may occur resulting in death or serious injuries.**
- **After adjusting the steering wheel, try moving it up and down or forward and rearward to make sure it is locked in position.**

Outside rear view mirrors—

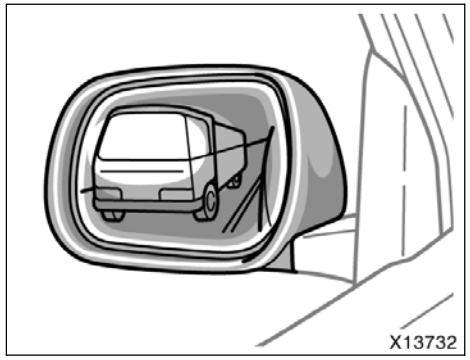

Adjust the mirror so that you can just see the side of your vehicle in the mirror.

Be careful when judging the size or distance of any object seen in the outside rear view mirror on the passenger’s side because it is a convex mirror. Any object seen in a convex mirror will look smaller and farther away than when seen in a flat mirror.

On some models, when you push the rear window defogger switch, the heater panels in the outside rear view mirrors will quickly clear the mirror surface. (See “Rear window and outside rear view mirror defoggers” on page 122 in Section 1–5.)

CAUTION

- **Do not adjust the mirror while the vehicle is moving. Doing so may cause the driver to mishandle the vehicle and an accident may occur resulting in death or serious injuries.**
- **On some models: Since the mirror surfaces can get hot, do not touch them when the defogger switch is on.**

—Power rear view mirror control

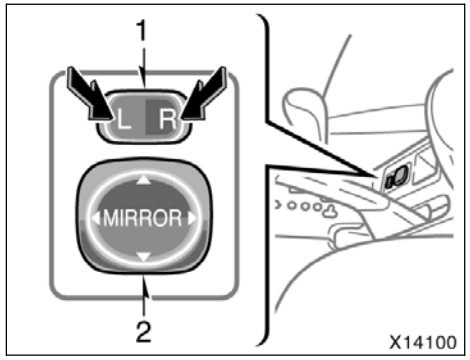

To adjust a mirror, use the switches.

1. Master switch—To select the mirror to be adjusted
   Push the switch to “L” (left) or “R” (right).
2. Control switch—To move the mirror
   Push the switch in the desired direction.

Mirrors can be adjusted when the engine switch is in the “ACC” or “ON” position.

NOTICE

If ice should jam the mirror, do not operate the control or scrape the mirror face. Use a spray de-icer to free the mirror.

—Folding rear view mirrors

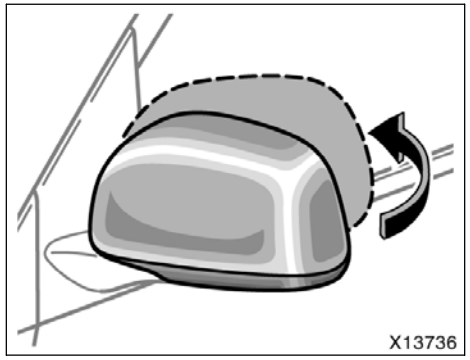

The rear view mirrors can be folded backward for parking in compact areas.

To fold the rear view mirror, push backward.

⚠ CAUTION

Do not drive with the mirrors folded backward. Both the driver and passenger side rear view mirrors must be extended and properly adjusted before driving.

Anti–glare inside rear view mirror

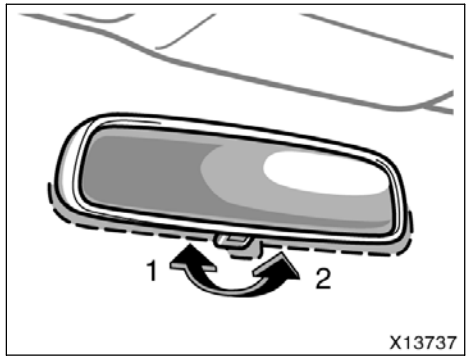

Adjust the mirror so that you can just see the rear of your vehicle in the mirror.

To reduce glare from the headlights of the vehicle behind you during night driving, operate the lever on the lower edge of the mirror.

Daylight driving—Lever at position 1

The reflection in the mirror has greater clarity at this position.

Night driving—Lever at position 2

Remember that by reducing glare you also lose some rear view clarity.

⚠ CAUTION

Do not adjust the mirror while the vehicle is moving. Doing so may cause the driver to mishandle the vehicle and an accident may occur resulting in death or serious injuries.

Sun visors—

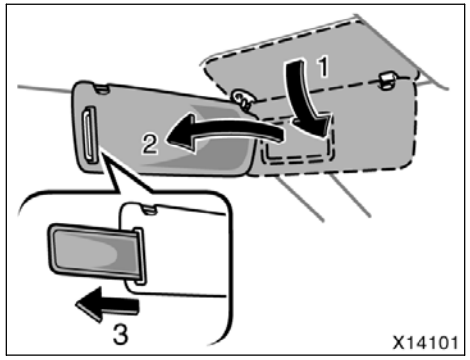

To block out glare, move the sun visor.

To block out glare from the front—Swing down the main sun visor (position 1).

To block out glare from the side—Swing down the main sun visor, remove it from the hook and swing it to the lateral side (position 2).

If glare comes from obliquely behind you, extend the plate at the end of the visor (to position 3).

CAUTION

Do not extend the plate at the end of the sun visor when the visor is in the position 1. It can cover the anti–glare inside rear view mirror and obstruct the rear view.

—Vanity mirrors

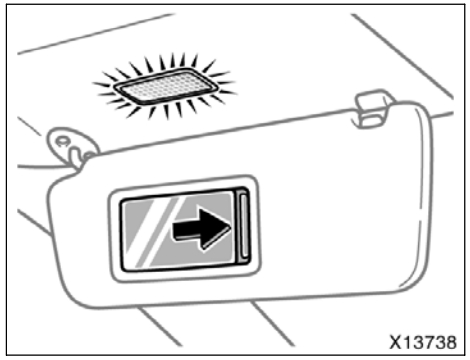

To use the vanity mirrors, swing down the main sun visor and slide the cover.

The vanity light comes on when you slide the cover.

SECTION 1 – 5

OPERATION OF INSTRUMENTS AND CONTROLS

Lights, Wipers and Defogger

Headlights and turn signals 114
Emergency flashers 116
Instrument panel light control 116
Front fog lights 117
Interior light 117
Personal lights 118
Luggage compartment light 118
Illuminated entry system 119
Windshield wipers and washer 120
Rear window wiper and washer 121
Windshield wiper de–icer 122
Rear window and outside rear view mirror defoggers 122

Headlights and turn signals

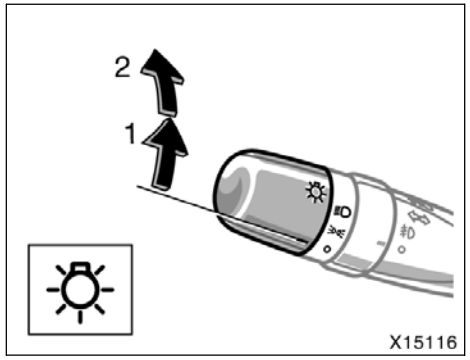

For the U.S.A.

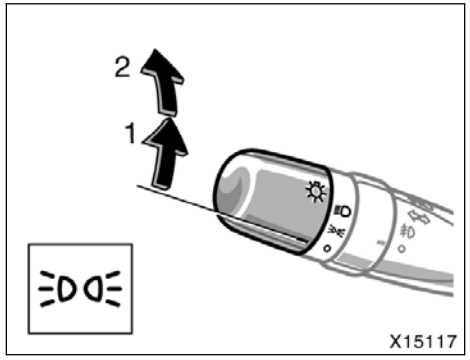

For Canada

HEADLIGHTS

To turn on the following lights: Twist the headlight/turn signal lever knob.

Position 1—Parking, tail, license plate, side marker and instrument panel lights

For Canada—The tail light indicator lights up in the instrument cluster.

Position 2—Headlights and all of the above

For the U.S.A.—The headlight indicator lights up in the instrument cluster.

Automatic light cut off system

If the driver’s door is opened and closed with the engine turned off, the lights will automatically turn off after 30 seconds. If all the doors are locked with the wireless remote control, the lights will turn off immediately.

To turn on the lights again, turn the engine switch to the “ON” position or turn the headlight switch on. If you are going to park for over one week, make sure the headlight switch is off.

NOTICE

To prevent the battery from being discharged, do not leave the lights on for a long period when the engine is not running.

Daytime running light system (on some models)

The headlights turn on at reduced intensity when the parking brake is released with the engine started, even with the light switch in the “OFF” position. They will not go off until the engine switch is turned off.

To turn on the other exterior lights and instrument panel lights, twist the knob to the position 1.

Twist the knob to the position 2 to turn the headlights to full intensity for driving at night.

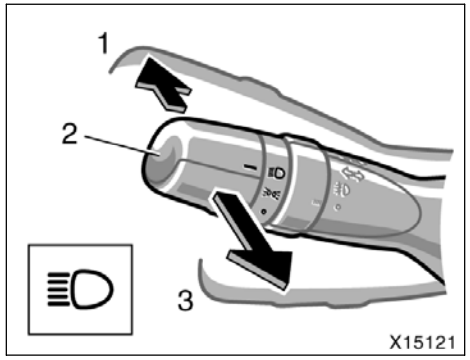

High–Low beams—For high beams, turn the headlights on and push the lever away from you (position 1). Pull the lever toward you (position 2) for low beams.

The headlight high beam indicator light (blue light) on the instrument panel will tell you that the high beams are on.

Flashing the high beam headlights (position 3)—Pull the lever all the way back. The high beam headlights turn off when you release the lever.

You can flash the high beam headlights with the knob turned to “OFF”.

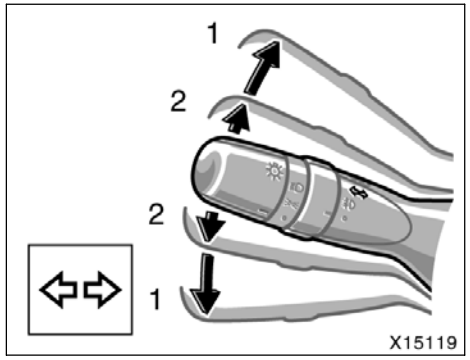

TURN SIGNALS

To signal a turn, push the headlight/turn signal lever up or down to position 1.

The engine switch must be in the “ON” position.

The lever automatically returns after you make a turn, but you may have to return it by hand after you change lanes.

To signal a lane change, move the lever up or down to the pressure point (position 2) and hold it.

If the turn signal indicator lights (green lights) on the instrument panel flash faster than normal, a front or rear turn signal bulb is burned out. See “Replacing light bulbs” on page 422 in Section 7–3.

Emergency flashers

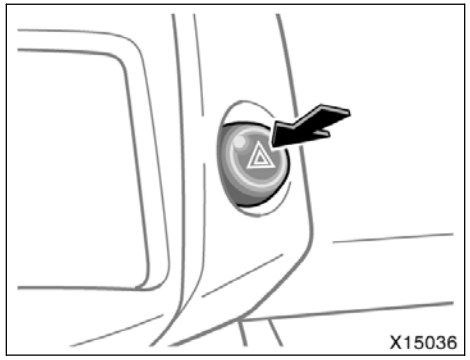

To turn on the emergency flashers, push the switch.

All the turn signal lights will flash. To turn them off, push the switch once again.

Turn on the emergency flashers to warn other drivers if your vehicle must be stopped where it might be a traffic hazard.

Always pull as far off the road as possible.

The turn signal light switch will not work when the emergency flashers are operating.

NOTICE

To prevent the battery from being discharged, do not leave the switch on longer than necessary when the engine is not running.

Instrument panel light control

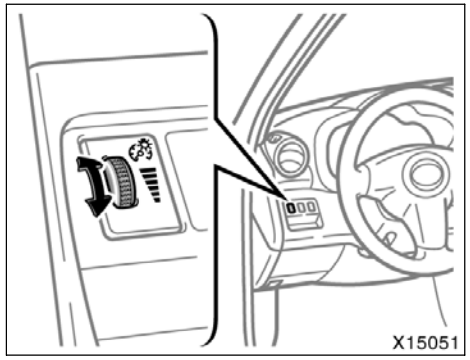

To adjust the brightness of the instrument panel lights, turn the dial.

With the dial turned fully up, the intensity of the instrument panel lights will not be reduced even when the tail lights/headlights are turned on.

Front fog lights

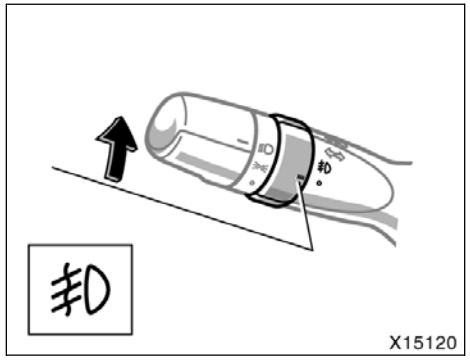

To turn on the front fog lights, twist the band of the headlight and turn signal switch lever. They will come on only when the headlights are on low beam.

Front fog light indicator light on the instrument panel will tell you that the front fog lights are on.

Interior light

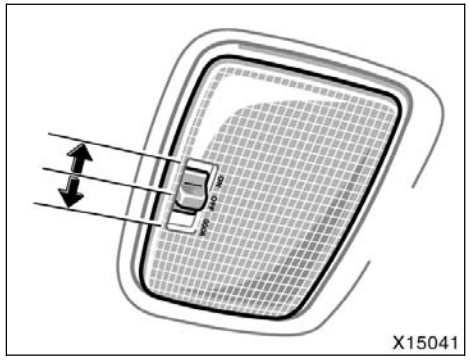

To turn on the interior light, slide the switch.

The interior light switch has the following positions:

“ON”—Keeps the light on all the time.

“OFF”—Turns the light off.

“DOOR”—Turns the light on when any of the side doors are opened. For details, see “Illuminated entry system” on page 119 in this Section.

INTERIOR LIGHT CUT OFF OPERATION

To prevent the battery being discharged, the light will automatically turn off when the engine switch is in the “LOCK” position and the door is left opened with the switch at the “DOOR” position for 20 minutes or more.

Personal lights

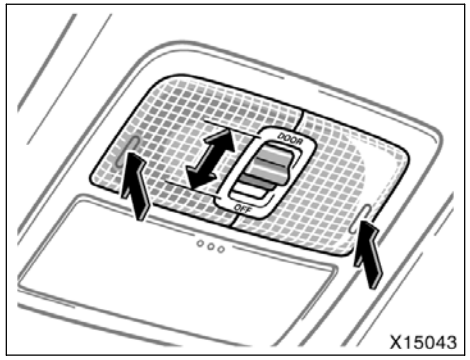

Without electric moon roof

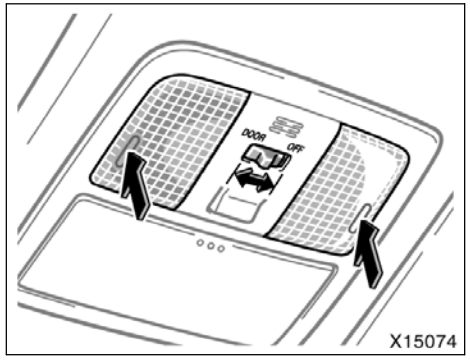

With electric moon roof

The personal lights operate separately with each lens.

To turn on the light, push the lens on your side. To turn the light off, push the lens once again.

The personal light switch has the following positions:

“DOOR”—Turns the lights on when any of the side doors is opened. For details, see “Illuminated entry system” on page 119 in this Section.

“OFF”—Turn the lights on only when you push the lens.

INTERIOR LIGHT CUT OFF OPERATION

To prevent the battery being discharged, the light will automatically turn off when the engine switch is in the “LOCK” position and the door is left opened with the switch at the “DOOR” position for 20 minutes or more.

Luggage compartment light

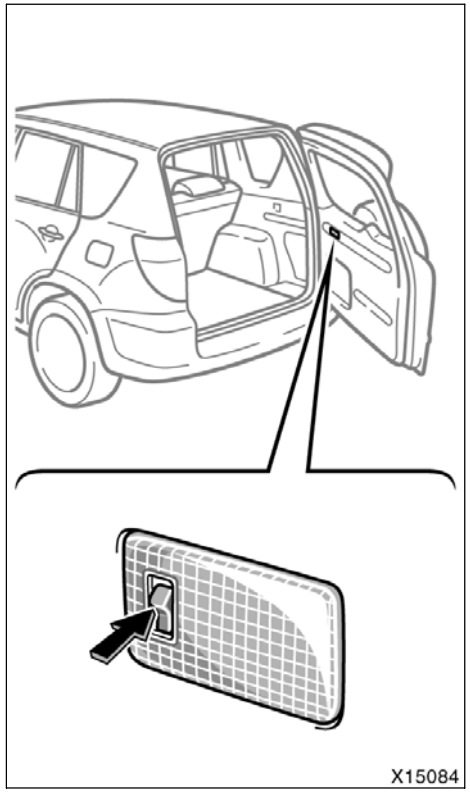

To turn on the luggage compartment light, push the luggage compartment light switch upwards. The light turn on when the back door is opened. The light goes off when the back door is closed.

Illuminated entry system

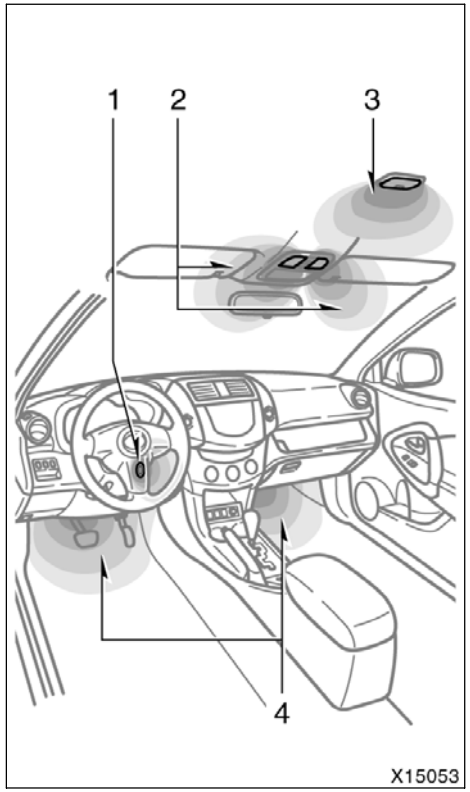

The following lights will come on when any of the side doors are opened. After all the side doors are closed, the lights remain on for about 15 seconds before fading out.

1. Engine switch light
2. Personal lights (with the “DOOR” position)
3. Interior light (with the “DOOR” position)
4. Foot lights

When any of the side doors are unlocked, the lights will come on and remain on for about 15 seconds before fading out.

If all the doors are closed, when the engine switch is turned to the “LOCK” position, the lights will come on and remain on for about 15 seconds.

The duration of the lighting can be changed. For details, ask your Toyota dealer.

If all the doors are closed and the engine switch is in the “ACC” position, the engine switch light and interior light will fade out.

If all the doors are locked, all the lights will fade out.

To prevent the battery being discharged, the lights will automatically turn off when the key is removed and the door is left opened for about 20 minutes.

FOOT LIGHTS

The foot lights also come on when the engine switch is in the “ON” position with the automatic transmission selector lever in the “P” position. When the selector lever is moved out of “P” position, the foot lights will be dimmed.

This operation can be customized. For details, ask your Toyota dealer.

Windshield wipers and washer

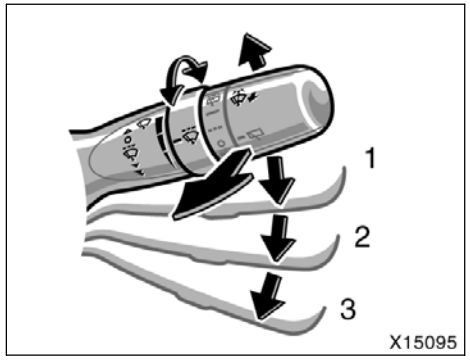

To turn on the windshield wipers, move the lever to the desired setting.

The engine switch must be in the “ON” position.

Lever position	Speed setting
Position 1	Intermittent operation
Position 2	Low speed operation
Position 3	High speed operation

For a single sweep of the windshield, push the lever up and release it.

The “INT” band lets you adjust the wiping time interval when the wiper lever is in the intermittent position (position 1). Twist the band upward to decrease the time between sweeps, and downward to increase it.

To squirt washer fluid, pull the lever toward you.

If the windshield wipers are off, they will operate a couple of times after the washer squirts.

For instructions on adding washer fluid, see “Adding washer fluid” on page 422 in Section 7–3.

In freezing weather, warm the windshield with the defroster before using the washer. This will help prevent the washer fluid from freezing on your windshield, which can block your vision.

NOTICE

Do not operate the wipers if the windshield is dry. It may scratch the glass.

When waxing your vehicle, make sure that the washer nozzles do not become blocked. If a nozzle becomes blocked, contact your Toyota dealer to have the vehicle serviced.

NOTICE
If a nozzle becomes blocked, do not try to clear it with a pin or other object. The nozzle will be damaged.

Rear window wiper and washer

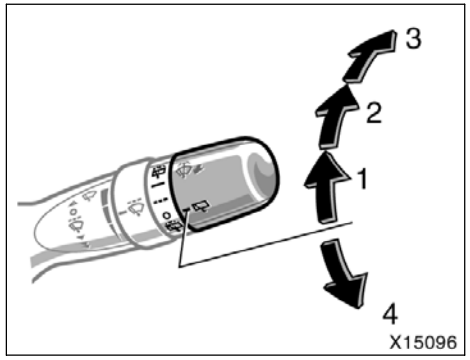

To turn on the rear window wiper, twist the lever knob upward.

The engine switch must be in the “ON” position.

Lever position	Speed setting
Position 1	Intermittent operation
Position 2	Normal operation

To squirt washer fluid on the rear window, twist the knob upward or downward as far as it will go (position 3 or 4). The knob automatically returns from these positions after you release it. The rear window wiper operates while the washer squirts.

For instructions on adding washer fluid, see “Adding washer fluid” on page 422 in Section 7–3.

NOTICE
Do not operate the rear wiper if the rear window is dry. It may scratch the glass.

Windshield wiper de–icer

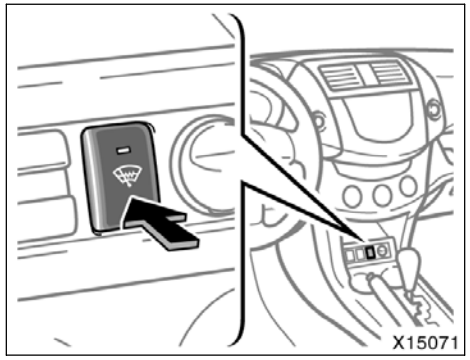

To deice the windshield wiper blades, push the switch.

The engine switch must be in the “ON” position.

The system will automatically shut off after the deicer has operated about 15 minutes. An indicator light will illuminate to indicate the deicer is operating.

If further deicing is desired, simply actuate the switch again. When the wiper blades have deiced, push the switch once again to turn the deicer off. Continuous use may cause the battery to discharge, especially during stop–and–go driving.

Rear window and outside rear view mirror defoggers

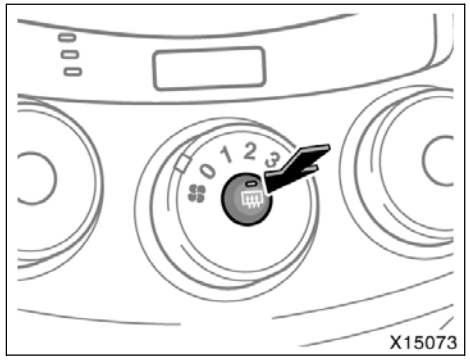

Manual air conditioning system

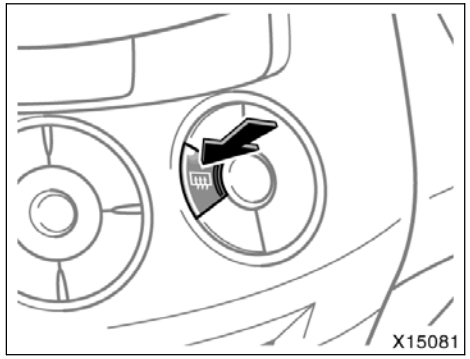

Automatic air conditioning system

To defog or defrost the rear window, push the switch.

The engine switch must be in the “ON” position.

The thin heater wires on the inside of the rear window will quickly clear the window surface. An indicator light will illuminate to indicate the defogger is operating.

On some models, the heater panels in the outside rear view mirrors will also quickly clear the surfaces.

Push the switch once again to turn the defoggers off.

The system will automatically shut off after the defoggers have operated about 15 minutes.

⚠ CAUTION

On some models: Since the mirror surfaces can get hot, do not touch them when the switch is on.

Make sure you turn the defoggers off when the surfaces are clear. Leaving the defoggers on for a long time could cause the battery to discharge, especially during stop–and–go driving. The defoggers are not designed for drying rain water or for melting snow.

If the outside rear view mirrors are heavily coated with ice, use a spray de–icer before operating the switch.

NOTICE
When cleaning the inside of the rear window, be careful not to scratch or damage the heater wires or connectors.

SECTION 1 – 6

OPERATION OF INSTRUMENTS AND CONTROLS

Gauges, Meters and Service reminder indicators

Fuel gauge 126
Engine coolant temperature gauge 126
Tachometer 127
Odometer and two trip meters 127
Outside temperature display 128
Service reminder indicators and warning buzzers 129

Fuel gauge

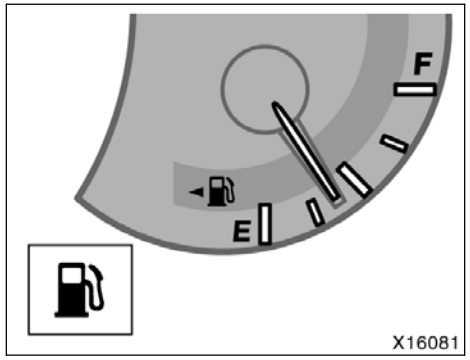

The gauge indicates the approximate quantity of fuel remaining in the tank when the engine switch is in the “ON” position.

Nearly full—Needle at “F”
Nearly empty—Needle at “E”

It is a good idea to keep the tank over 1/4 full.

The needle moves when braking, accelerating or making turns. This is caused by the movement of the fuel in the tank.

If the fuel level approaches “E” or the low fuel level warning light comes on, fill the fuel tank as soon as possible.

On inclines or curves, due to the movement of fuel in the tank, the fuel gauge needle may fluctuate or the low fuel level warning light may come on earlier than usual.

If the fuel tank is completely empty, the malfunction indicator lamp comes on. Fill the fuel tank immediately.

The indicator lamp goes off after driving several times. If the indicator lamp does not go off, contact your Toyota dealer as soon as possible.

Engine coolant temperature gauge

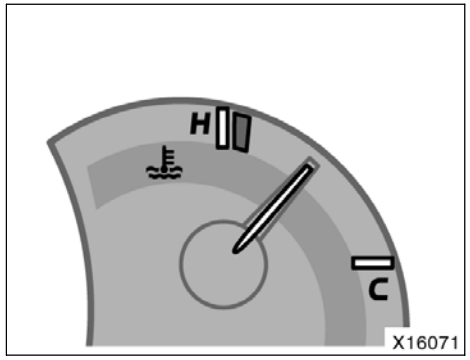

The gauge indicates the engine coolant temperature when the engine switch is in the “ON” position. The engine operating temperature will vary with changes in weather and engine load.

If the needle moves into the red zone, your engine is too hot. If your vehicle overheats, stop your vehicle and allow the engine to cool.

Your vehicle may overheat during severe operating conditions, such as:

- Driving up a long hill on a hot day.
- Reducing speed or stopping after high speed driving.

- Idling for a long period with the air conditioning on in stop–and–go traffic.
- Towing a trailer.

NOTICE

- ***Do not remove the thermostat in the engine cooling system as this may cause the engine to overheat. The thermostat is designed to control the flow of coolant to keep the temperature of the engine within the specified operating range.***
- ***Do not continue driving with an overheated engine. See “If your vehicle overheats” on page 360 in Section 4.***

Tachometer

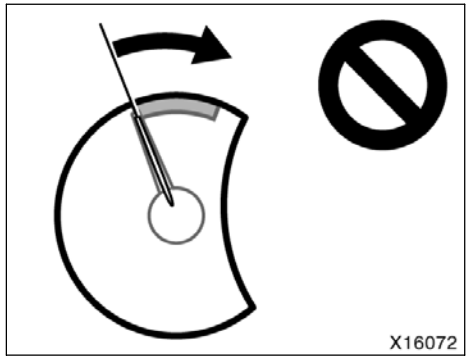

The tachometer indicates engine speed in thousands of rpm (revolutions per minute). Use it while driving to select correct shift points and to prevent engine lugging and over–revving.

Driving with the engine running too fast causes excessive engine wear and poor fuel economy. Remember, in most cases the slower the engine speed, the greater the fuel economy.

NOTICE

Do not let the indicator needle get into the red zone. This may cause severe engine damage.

Odometer and two trip meters

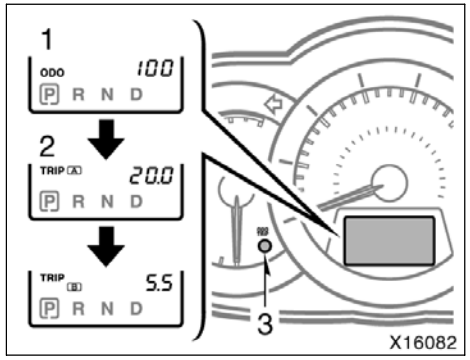

This meter displays the odometer and two trip meters.

1. Odometer—Shows the total distance the vehicle has been driven.
2. Two trip meters—Show two different distances independently driven since the last time each trip meter was set to zero.

   You can use one trip meter to calculate the fuel economy and the other to measure the distance on each trip. All trip meter data is cancelled if the electrical power source is disconnected.

3. Trip meter reset knob—Resets the two trip meters to zero, and also change the meter display.

   To change the meter display, quickly push and release the knob. The meter display changes in the order from the odometer to trip meter A to trip meter B, then back to the odometer each time you push.

   To reset the trip meter A to zero, display the meter A reading, then push and hold the knob until the meter is set to zero. The same process can be applied for resetting the trip meter B.

Outside temperature display

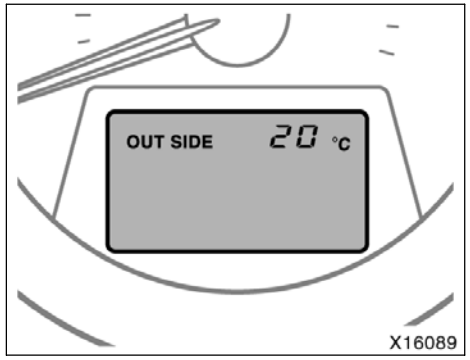

The displayed temperature ranges from –40°C (–40°F) up to 50°C (122°F).

The engine switch must be in the “ON” position.

If an abnormality exists in the connection of the outside air temperature sensor, “––°C” will appear on the display. If “––°C” appears on the display, contact your Toyota dealer.

When the outside air temperature falls below 3°C (37°F) while driving, the temperature display flashes to indicate that the outside air temperature is becoming low. However, if the temperature is already 3°C (37°F) or below, the display does not flash when the engine is turned to the “ON” position.

Service reminder indicators and warning buzzers

If the indicator or buzzer comes on...		Do this.
(a)	**BRAKE** or	If parking brake is off, stop immediately and contact Toyota dealer.
(b)	(indicator and buzzer)	Fasten driver’s seat belt.
(c)	PASSENGER (indicator and buzzer)	Fasten front passenger’s seat belt.
(d)		Stop immediately and contact Toyota dealer.
(e)		Stop and check.
(f)	CHECK or	Take vehicle to Toyota dealer.
(g)		Fill up tank.

If the indicator or buzzer comes on...		Do this.
(h)	ABS or	Take vehicle to Toyota dealer. If brake system warning light is also on, stop immediately and contact Toyota dealer.
(i)		Close all side doors and back door.
(j)		Take vehicle to Toyota dealer immediately.
(k)	A/T OIL TEMP	Stop and check.
(l)	VSC	Take vehicle to Toyota dealer.
(m)		Adjust the tire inflation pressure. If warning light remains, contact Toyota dealer.
(n)	4WD	Cool the driveline without turning off the engine. If warning light remains, contact Toyota dealer.
(o)	P/S	Take vehicle to Toyota dealer as soon as possible.

If the indicator or buzzer comes on...		Do this.
(p)		Add washer fluid.
(q)	MAINT REQD	Replace engine oil.
(r)	Key reminder buzzer	Remove key.

(a) Brake System Warning Light

This light comes on in the following cases when the engine switch is in the “ON” position.

- **When the parking brake is applied...**

This light comes on for a few seconds when the engine switch is turned to the “ON” position even after the parking brake is released.

- **When the brake fluid level is low...**

CAUTION

It is dangerous to continue driving normally when the brake fluid level is low.

Have your vehicle checked at your Toyota dealer in the following cases:

- The light does not come on even if the parking brake is applied when the engine switch is in the “ON” position.
- The light does not come on even if the engine is turned to the “ON” position with the parking brake released.

A warning light turning on briefly during operation does not indicate a problem.

CAUTION

If either of the following conditions occurs, immediately stop your vehicle at a safe place and contact your Toyota dealer.

- **The light does not turn off even after the parking brake is released while the engine is running.**

  In this case, the brakes may not work properly and your stopping distance will become longer. Depress the brake pedal firmly and bring the vehicle to an immediate stop.

- **The brake system warning light remains on together with the “ABS” warning light.**

  In this case, not only the anti–lock brake system will fail but also the vehicle will become extremely unstable during braking.

(b) Driver’s Seat Belt Reminder Light and Buzzer

The light and buzzer act as a reminder to buckle up the driver’s seat belt.

Once the engine switch is turned to the “ON” or “START” position, the reminder light flashes if the driver’s seat belt is not fastened. Unless the driver fastens the belt, the light continues flashing.

If the vehicle speed rises above 20 km/h (12 mph) with the seat belt unfastened, the buzzer will sound for 30 seconds. Then, if the seat belt is still unfastened, the buzzer will sound in a different tone for 90 more seconds. Even if the vehicle speed drops below 20 km/h (12 mph), the buzzer will continue to sound. To stop the buzzer, fasten the seat belt. If the buzzer still sounds, make sure the front passenger’s seat belt is fastened.

(c) Front Passenger’s Seat Belt Reminder Light and Buzzer

The light and buzzer act as a reminder to have the front passenger buckle up the seat belt.

Once the engine switch is turned to the “ON” or “START” position, the reminder light flashes if a passenger sits in the front passenger seat and does not fasten the seat belt. However, if a front passenger uses an additional seat cushion, the light may not flash even when the seat belt is not buckled up.

If the vehicle speed rises above 20 km/h (12 mph) with the seat belt unfastened, the buzzer will sound for 30 seconds. Then, if the seat belt is still unfastened, the buzzer will sound in a different tone for 90 more seconds. Even if the vehicle speed drops below 20 km/h (12 mph), the buzzer will continue to sound. To stop the buzzer, fasten the seat belt. If the buzzer still sounds, make sure the driver’s seat belt is fastened.

If luggage or other load is placed on the front passenger seat, depending on its weight the reminder light may flash.

(d) Charging System Warning Light

This warning light comes on when the engine switch is turned to the “ON” position, and goes off when the engine is started.

When there are problems in the charging system while the engine is running, the warning light comes on.

NOTICE

When the charging system warning light comes on while the engine is running, malfunctions such as the engine drive belt being broken may have occurred. If the warning light comes on, immediately stop the vehicle in a safe place and contact your Toyota dealer.

(e) Low Engine Oil Pressure Warning Light

This light warns that the engine oil pressure is too low.

If it flickers or stays on while you are driving, pull off the road to a safe place and stop the engine immediately. Call a Toyota dealer or qualified repair shop for assistance.

The light may occasionally flicker when the engine is idling or it may come on briefly after a hard stop. There is no cause for concern if it then goes out when the engine is accelerated slightly.

The light may come on when the oil level is extremely low. It is not designed to indicate low oil level, and the oil level must be checked using the level dipstick.

NOTICE

Do not drive the vehicle with the warning light on—even for one block. It may ruin the engine.

(f) Malfunction Indicator Lamp

This lamp comes on when the engine switch is turned to the “ON” position and goes off after the engine starts. This means that the warning light system is operating properly.

If the lamp remains on, or the lamp comes on while driving, first check the followings.

- Empty fuel tank

  If the fuel tank is empty, refuel immediately.

- Loose fuel tank cap

  If the fuel tank cap is loose, securely tighten it.

These cases are temporary malfunctions. The malfunction indicator lamp will go off after taking several driving trips.

If the lamp does not go off even after several trips, contact your Toyota dealer as soon as possible.

If the fuel tank is not empty or the fuel tank cap is not loose...

- There is a problem somewhere in the engine, emission control system, electronic throttle control system, automatic transmission electrical system or warning light system itself.

Contact your Toyota dealer as soon as possible to service the vehicle.

If engine speed does not increase when the accelerator pedal is depressed, there may be a problem somewhere in the electronic throttle control system.

At this time, vibration may occur. However, if you depress the accelerator pedal more firmly and slowly, you can drive your vehicle at low speeds. Have your vehicle checked by your Toyota dealer as soon as possible.

Even if the abnormality of the electronic throttle control system is corrected during low speed driving, the system may not be recovered until the engine is stopped and the engine switch is turned to the “ACC” or “LOCK” position.

⚠ CAUTION

Be especially careful to prevent erroneous pedal operation.

Emissions Inspection and Maintenance (I/M) programs

Your vehicle may not pass a state emission inspection if the malfunction indicator lamp remains on. Contact your Toyota dealer to check your vehicle’s emission control system and OBD (On–Board Diagnostics) system before taking your vehicle for the inspection.

For details, see “Emissions Inspection and Maintenance (I/M) programs” on page 394 in Section 6.

(g) Low Fuel Level Warning Light

This light comes on when the fuel level in the tank becomes nearly empty. Fill up the tank as soon as possible.

On inclines or curves, due to the movement of fuel in the tank, the low fuel level warning light may come on earlier than usual.

(h) “ABS” Warning Light

The light comes on when the engine switch is turned to the “ON” position. If the anti–lock brake system and the brake assist system work properly, the light turns off after a few seconds. Thereafter, if either of the systems malfunctions, the light comes on again.

When the “ABS” warning light is on (and the brake system warning light is off), the following systems do not operate, but the brake system still operates conventionally.

- Anti–lock brake system
- Brake assist system
- Traction control system
- “AUTO LSD” system
- Enhanced vehicle stability control system
- Downhill assist control system
- Hill–start assist control system

When the “ABS” warning light is on (and the brake system warning light is off), the anti–lock brake system does not operate so that the wheels could lock up during a sudden braking or braking on slippery road surfaces.

If either of the following conditions occurs, this indicates a malfunction somewhere in the components monitored by the warning light. Contact your Toyota dealer as soon as possible to service the vehicle.

- The light does not come on when the engine switch is turned to the “ON” position, or remains on.
- The light comes on while you are driving.

A warning light turning on briefly during operation does not indicate a problem.

CAUTION

If the “ABS” warning light remains on together with the brake system warning light, immediately stop your vehicle at a safe place and contact your Toyota dealer.

In this case, not only the anti–lock brake system will fail but also the vehicle will become extremely unstable during braking.

(i) Open Door Warning Light

This light remains on until all the side doors and back door are completely closed.

(j) SRS Warning Light

This indicator comes on when the engine switch is turned to the “ON” position. It goes off after about 6 seconds. This means the SRS airbags and seat belt pretensioners are operating properly.

This warning light system monitors the airbag sensor assembly, front airbag sensors, side and curtain shield airbag sensors, curtain shield airbag sensors, driver’s seat position sensor, driver’s seat belt buckle switch, “AIR BAG ON” indicator light, “AIR BAG OFF” indicator light, front passenger’s seat belt buckle switch, seat belt pretensioner assemblies, inflators, interconnecting wiring and power sources.

If any of the following conditions occurs, this indicates a malfunction of the airbags or seat belt pretensioners. Contact your Toyota dealer as soon as possible.

- The light does not come on when the engine switch is turned to the “ON” position or remains on for more than 6 seconds.
- The light comes on while driving.

The SRS warning light and “AIR BAG OFF” indicator light will come on if there is a malfunction in the front passenger occupant classification system.

(k) Automatic Transmission Fluid Temperature Warning Light

This light warns that the automatic transmission fluid temperature is too high.

If this light comes on while you are driving, slow down and pull off the road. Stop the vehicle at a safe place and put the selector lever in “P”. With the engine idling, wait until the light goes off. If the light goes off, you can start the vehicle again. If the light does not go off, call a Toyota dealer or qualified repair shop for assistance.

NOTICE
Continued driving with the warning light on may damage the automatic transmission.

(l) “VSC” Warning Light

The light warns that there is a problem somewhere in the following.

- Enhanced vehicle stability control system
- Traction control system
- “AUTO LSD” system
- Downhill assist control system
- Hill–start assist control system

The light will come on when the engine switch is turned to the “ON” position and will go off after a few seconds.

If the light comes on while driving, all the above systems will not work. In such a case, the brakes will operate when applied (no electronic assistance will be available), and it will be possible to continue driving the vehicle.

In the following cases, contact your Toyota dealer:

- The warning light does not come on after the engine switch is turned to the “ON” position.
- The warning light remains on after the engine switch is turned to the “ON” position.
- The warning light comes on while driving.

(m) Tire Pressure Warning Light

This light warns that the tire pressure of one or more of your tires (including the spare tire) is low. The light comes on when the engine switch is turned to the “ON” position. It goes off after a few seconds. This indicates that the tire pressure warning system is functioning properly.

If the warning light comes on while you are driving, the tire pressure of one or more of your tires (including the spare tire) is low. The light goes off after the tire inflation pressure is adjusted to the proper pressure.

If the warning light blinks, the tire pressure warning system may be malfunctioning. Contact your Toyota dealer.

For details, see “Tire pressure warning system” on page 163 in Section 1–7.

(n) “4WD” Warning Light

The light warns that when there is a problem somewhere in active torque control 4WD system.

The light will come on when the engine switch is turned to the “ON” position, and will go off after about a few seconds.

If the warning light does not come on when the engine switch is turned to the “ON” position, contact your Toyota dealer to service the vehicle.

If the “4WD” warning light flashes...

This indicates that the driveline temperature has become too high. Without turning off the engine, do either of the following to cool the driveline:

- Reduce vehicle speed until the light goes off.
- Stop the vehicle at a safe place and allow the engine to idle until the light goes off.

If operation of the vehicle is continued while the light is flashing, the system automatically shuts off the engine torque that is applied to the rear wheels to protect the driveline. If this happens, the light will flash faster.

When the driveline temperature falls enough, the light will go off.

If the “4WD” warning light remains on...

This indicates that the system may not work properly. Contact your Toyota dealer to service your vehicle.

(o) Electric Power Steering System Warning Light

The light comes on when the engine switch is turned to the “ON” position. If the electric power steering system warning light works properly, the light turns off after a few seconds. If the system has malfunctions, the light comes on again.

If the following conditions occur, this indicates a malfunction somewhere in the components monitored by the warning light system. Have your vehicle checked by your Toyota dealer as soon as possible.

- The light does not come on when the engine switch is turned to the “ON” position or remains on.
- The light stays on while you are driving.

⚠ CAUTION

If the electric power steering system warning light comes on, take your vehicle to your Toyota dealer as soon as possible. In this case, more effort is required for the steering wheel to turn than usual. Drive your vehicle while firmly gripping the steering wheel.

(p) Low Windshield Washer Fluid Level Warning Light

The light warns that the windshield washer fluid level is too low. Add washer fluid at your earliest opportunity. (For instructions, see “Adding washer fluid” on page 422 in Section 7–3.)

(q) Engine Oil Replacement Reminder Light

This light acts as a reminder to replace the engine oil.

This light will come on when the engine switch is turned to the “ON” position and will go off after about a few seconds.

When you drive for about 7200 km (4500 miles) after the engine oil replacement, this light illuminates for about 3 seconds and then flashes for about 12 seconds with the engine switch turned to the “ON” position. If you continue driving without replacing the engine oil, and if the distance driven exceeds 8000 km (5000 miles), the light will come on after the engine switch is turned to the “ON” position. The light will remain on thereafter.

If the light is flashing, we recommend that you replace the engine oil at an early opportunity depending on the driving and road conditions. If the light comes on, replace it as soon as possible.

The system must be reset after the engine oil replacement. Reset the system by the following procedure:

1. Turn the engine switch to the “OFF” position with the trip meter A reading shown. (For details, see “Odometer and two trip meters” on page 127 in this Section.)
2. Turn the engine switch to the “ON” position while holding down the trip meter reset knob.

Hold down the knob for at least 5 seconds. The odometer indicates “000000” and the light goes off.

If the system fails to reset, the light will continue flashing.

(r) Key Reminder Buzzer

This buzzer acts as a reminder to remove the key when you open the driver’s door with the engine switch in the “ACC” or “LOCK” position.

CHECKING SERVICE REMINDER INDICATORS (except the low fuel level warning light and low windshield washer fluid level warning light)

1. Apply the parking brake.
2. Open one of the doors.
   The open door warning light should come on.
3. Close the door.
   The open door warning light should go off.
4. Turn the engine switch to the “ON” position, but do not start the engine.
   All the service reminder indicators except the open door warning light should come on.

   The following service reminder indicators go off after a few seconds:

- Engine oil replacement reminder light
- Automatic transmission fluid temperature warning light
- “ABS” warning light
- “VSC” warning light
- Tire pressure warning light
- “4WD” warning light
- Electric power steering system warning light

- “AUTO LSD” indicator light
- Slip indicator light
- Downhill assist control system indicator light
- Four–wheel drive lock indicator light

  The SRS warning light goes off after about 6 seconds.

If any service reminder indicator or warning buzzer does not function as described above, have it checked by your Toyota dealer as soon as possible.

SECTION 1 – 7

OPERATION OF INSTRUMENTS AND CONTROLS

Engine (ignition) switch, Transmission and Parking brake

Engine (ignition) switch 142
Automatic transmission 143
Active torque control 4WD system 150
Traction control system 152
“AUTO LSD” system 153
Enhanced vehicle stability control system 155
Downhill assist control system 158
Hill–start assist control system 161
Tire pressure warning system 163
Parking brake 167
Cruise control 168

Engine (ignition) switch

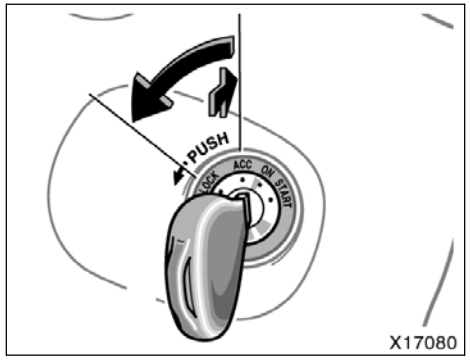

“START”—Starter motor on. The key will return to the “ON” position when released.

For starting tips, see page 341 in Section 3.

“ON”—Engine on and all accessories on.

This is the normal driving position.

“ACC”—Accessories such as the radio operate, but the engine is off.

If you leave the engine switch in the “ACC” or “LOCK” position and open the driver’s door, a buzzer will remind you to remove the key.

“LOCK”—Engine is off and the steering wheel is locked. The key can be removed only at this position.

You must push in the key to turn the engine switch from the “ACC” to “LOCK” position. The selector lever must be in the “P” position before pushing the key.

Vehicles with engine immobilizer system—Once you remove the key, the engine immobilizer system is automatically set. (See “Engine immobilizer system” on page 15 in Section 1–2.)

When starting the engine, the engine switch may seem stuck at the “LOCK” position. To free it, first be sure the key is pushed all the way in, and then rotate the steering wheel slightly while turning the key gently.

Approximately five hours after the engine is turned off, you may hear sound coming from under the floor around the driver’s seat for several minutes. This is normal operation and does not indicate a malfunction. (See “Leak detection pump” on page ix.)

It is not a malfunction if the needle on all meters and gauges move slightly when the engine switch is turned to the “ON” or “START” position.

NOTICE

Do not leave the engine switch in the “ON” position if the engine is not running. The battery will discharge and the ignition could be damaged.

Automatic transmission (4–speed)

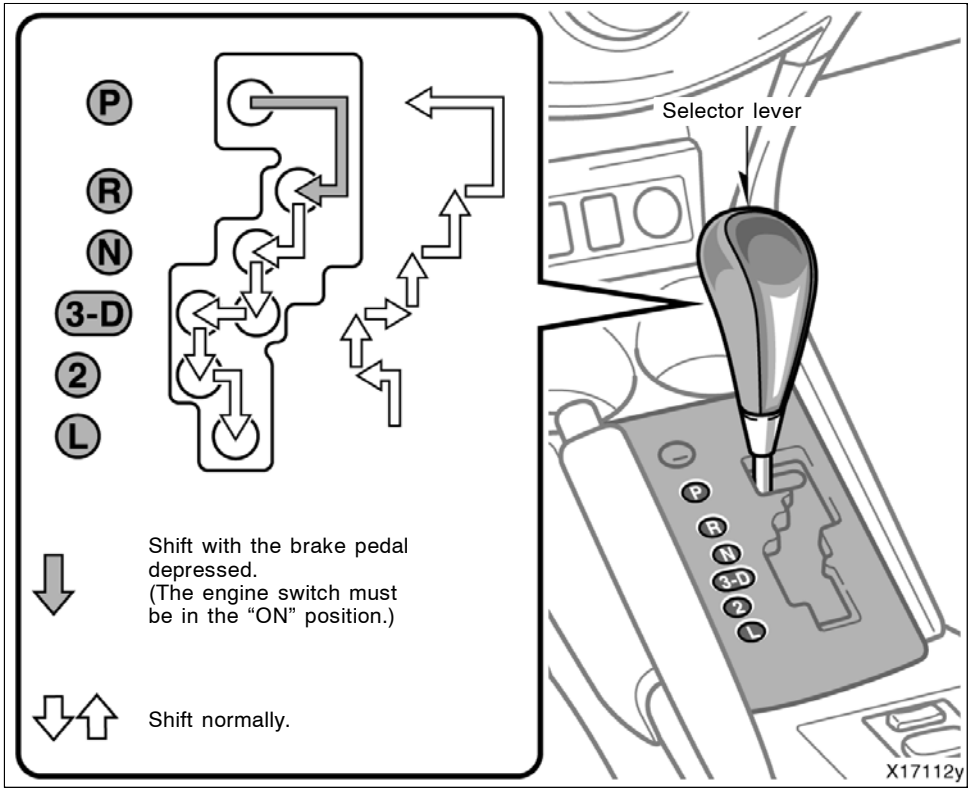

Your automatic transmission has a shift lock system to minimize the possibility of incorrect operation. This means you can only shift out of the “P” position when the brake pedal is depressed (with the engine switch in the “ON” position).

(a) Selector lever

The shift position is also displayed on the instrument cluster.

P: Parking, engine starting and key removal

R: Reverse

N: Neutral

D: Normal driving (shifting into overdrive possible)

3: Engine braking (shifting into overdrive not possible)

2: Stronger engine braking

L: Maximum engine braking

(b) Normal driving

1. Start the engine as instructed in “How to start the engine” on page 342 in Section 3. The transmission must be in the “P” or “N” position.
2. With your foot holding down the brake pedal, shift the selector lever to the “D” position.

When the lever is in the “D” position, the automatic transmission system will select the most suitable gear for running conditions such as normal cruising, hill climbing, hard towing, etc.

Always use the “D” position for better fuel economy and quieter driving. If the engine coolant temperature is low, the transmission will not shift into the overdrive gear even in the “D” position.

⚠ CAUTION

Never put your foot on the accelerator pedal while shifting.

3. Release the parking brake and brake pedal. Depress the accelerator pedal slowly for smooth starting.

(c) Using engine braking

To use engine braking, you can downshift the transmission as follows:

- Shift into the “3” position. The transmission will downshift to third gear and engine braking will be enabled.

  Two–wheel drive models
  173 km/h (108 mph)
  Four–wheel drive models
  164 km/h (102 mph)

- Shift into the “2” position. The transmission will downshift to second gear when the vehicle speed drops down to or lower than the following speed, and stronger engine braking will be enabled.

  Two–wheel drive models
  113 km/h (70 mph)
  Four–wheel drive models
  107 km/h (66 mph)

- Shift into the “L” position. The transmission will downshift to first gear when the vehicle speed drops down to or lower than the following speed, and maximum engine braking will be enabled.

  Two–wheel drive models
  56 km/h (35 mph)
  Four–wheel drive models
  53 km/h (33 mph)

When the cruise control is being used, even if you downshift from the “D” to “3” position, engine braking will not be enabled because the cruise control is not cancelled.

For ways to decrease the vehicle speed, see “Cruise control” on page 168 in this Section.

⚠ CAUTION

Be careful when downshifting on a slippery surface. Abrupt shifting could cause the vehicle to skid or spin.

(d) Using the “2” and “L” positions

The “2” and “L” positions are used for strong engine braking as described previously.

With the selector lever in the “2” or “L” position, you can start the vehicle in motion as with the lever in the “D” position.

With the selector lever in the “2” position, the vehicle will start in first gear and automatically shift to second gear.

With the selector lever in the “L” position, the transmission is engaged in first gear.

NOTICE

◆Be careful not to over-rev the engine. Watch the tachometer to keep engine rpm from going into the red zone. The approximate maximum allowable speed for each position is given below for your reference:

Two-wheel drive models
“2” ..... 126 km/h (78 mph)
“L” ..... 70 km/h (43 mph)

Four-wheel drive models
“2” ..... 120 km/h (74 mph)
“L” ..... 67 km/h (41 mph)

◆Do not continue hill climbing or hard towing for a long time in the “2” or “L” position. This may cause severe automatic transmission damage from overheating. To prevent such damage, the “3” position should be used in hill climbing or hard towing.

(e) Backing up

1. Bring the vehicle to a complete stop.
2. With the brake pedal held down with your foot, shift the selector lever to the “R” position.

NOTICE

Never shift into reverse while the vehicle is moving.

(f) Parking

1. Bring the vehicle to a complete stop.
2. Pull the parking brake lever up fully to securely apply the parking brake.
3. With the brake pedal pressed down, shift the selector lever to the “P” position.

⚠ CAUTION

Never attempt to move the selector lever into the “P” position under any circumstances while the vehicle is moving. Serious mechanical damage and loss of vehicle control may result.

(g) Good driving practice

- If the transmission repeatedly shifts up and down between third gear and overdrive when climbing a gentle slope, shift the selector lever to the “3” position. Be sure to shift the selector lever to the “D” position immediately afterward.
- When towing a trailer, in order to maintain engine braking efficiency, do not use the “D” position.

⚠ CAUTION

Always keep your foot on the brake pedal while stopped with the engine running. This prevents the vehicle from creeping.

NOTICE

Always use the brake pedal or the parking brake to hold the vehicle on an upgrade. Do not attempt to hold the vehicle using the accelerator pedal, as this can cause the transmission to overheat.

(h) If you cannot shift the selector lever out of the “P” position

If you cannot shift the selector lever from the “P” position even though the brake pedal is depressed, use the shift lock override button. For instructions, see “If you cannot shift automatic transmission selector lever” on page 378 in Section 4.

Automatic transmission (5–speed)

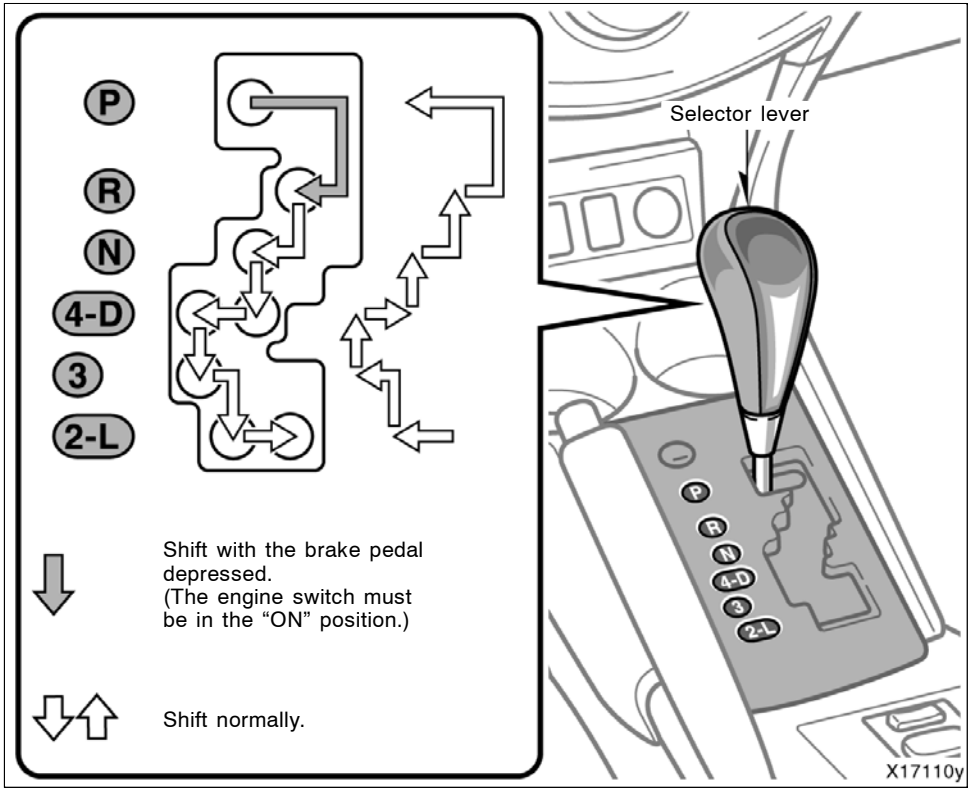

Your automatic transmission has a shift lock system to minimize the possibility of incorrect operation. This means you can only shift out of the “P” position when the brake pedal is depressed (with the engine switch in the “ON” position).

(a) Selector lever

The shift position is also displayed on the instrument cluster.

P: Parking, engine starting and key removal

R: Reverse

N: Neutral

D: Normal driving (shifting into overdrive possible)

4: Engine braking (shifting into overdrive not possible)

3, 2: Stronger engine braking

L: Maximum engine braking

(b) Normal driving

1. Start the engine as instructed in “How to start the engine” on page 342 in Section 3. The transmission must be in the “P” or “N” position.
2. With your foot holding down the brake pedal, shift the selector lever to the “D” position.

When the lever is in the “D” position, the automatic transmission system will select the most suitable gear for running conditions such as normal cruising, hill climbing, hard towing, etc.

Always use the “D” position for better fuel economy and quieter driving. If the engine coolant temperature is low, the transmission will not shift into the overdrive gear even in the “D” position.

⚠ CAUTION

Never put your foot on the accelerator pedal while shifting.

3. Release the parking brake and brake pedal. Depress the accelerator pedal slowly for smooth starting.

(c) Using engine braking

To use engine braking, you can downshift the transmission as follows:

- Shift into the “4” position. The transmission will downshift to fourth gear and engine braking will be enabled.
- Shift into the “3” position. The transmission will downshift to third gear when the vehicle speed drops down to or lower than 161 km/h (100 mph), and stronger engine braking will be enabled.
- Shift into the “2” position. The transmission will downshift to second gear when the vehicle speed drops down to or lower than 99 km/h (62 mph), and stronger engine braking will be enabled.
- Shift into the “L” position. The transmission will downshift to first gear when the vehicle speed drops down to or lower than 42 km/h (26 mph), and maximum engine braking will be enabled.

When the cruise control is being used, even if you downshift from the “D” to “4” position, engine braking will not be enabled because the cruise control is not cancelled.

For ways to decrease the vehicle speed, see “Cruise control” on page 168 in this Section.

⚠ CAUTION

Be careful when downshifting on a slippery surface. Abrupt shifting could cause the vehicle to skid or spin.

(d) Using the “3”, “2” and “L” positions

The “3”, “2” and “L” positions are used for strong engine braking as described previously.

With the selector lever in the “3”, “2” or “L” position, you can start the vehicle in motion as with the lever in the “D” position.

With the selector lever in the “3” or “2” position, the vehicle will start in first gear and automatically shift to third gear or second gear.

With the selector lever in the “L” position, the transmission is engaged in first gear.

NOTICE

◆***Be careful not to over–rev the engine. Watch the tachometer to keep engine rpm from going into the red zone. The approximate maximum allowable speed for each position is given below for your reference:***

“3” . . . . . 175 km/h (109 mph)
“2” . . . . . 113 km/h (70 mph)
“L” . . . . . 63 km/h (39 mph)

◆***Do not continue hill climbing or hard towing for a long time in the “3”, “2” or “L” position. This may cause severe automatic transmission damage from overheating. To prevent such damage, the “4” position should be used in hill climbing or hard towing.***

(e) Backing up

1. Bring the vehicle to a complete stop.
2. With the brake pedal held down with your foot, shift the selector lever to the “R” position.

NOTICE

Never shift into reverse while the vehicle is moving.

(f) Parking

1. Bring the vehicle to a complete stop.
2. Pull the parking brake lever up fully to securely apply the parking brake.
3. With the brake pedal pressed down, shift the selector lever to the “P” position.

⚠ CAUTION

Never attempt to move the selector lever into the “P” position under any circumstances while the vehicle is moving. Serious mechanical damage and loss of vehicle control may result.

(g) Good driving practice

- If the transmission repeatedly shifts up and down between fourth gear and overdrive when climbing a gentle slope, shift the selector lever to the “4” position. Be sure to shift the selector lever to the “D” position immediately afterward.
- When towing a trailer, in order to maintain engine braking efficiency, do not use the “D” position.

⚠ CAUTION

Always keep your foot on the brake pedal while stopped with the engine running. This prevents the vehicle from creeping.

NOTICE

Always use the brake pedal or the parking brake to hold the vehicle on an upgrade. Do not attempt to hold the vehicle using the accelerator pedal, as this can cause the transmission to overheat.

(h) If you cannot shift the selector lever out of the “P” position

If you cannot shift the selector lever from the “P” position even though the brake pedal is depressed, use the shift lock override button. For instructions, see “If you cannot shift automatic transmission selector lever” on page 378 in Section 4.

Active torque control 4WD system

The active torque control 4WD system controls the engine torque that is applied to the rear wheels according to the driving conditions and road conditions. When the vehicle’s driving conditions are stable such as driving straight ahead, the engine torque is applied to only the front wheels.

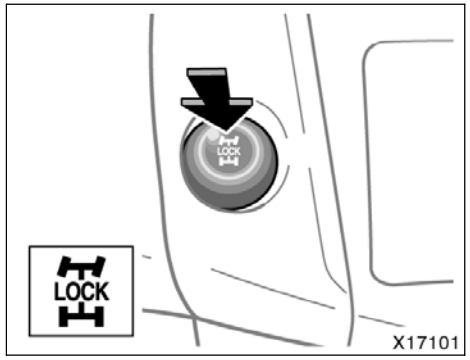

FOUR–WHEEL DRIVE LOCK SWITCH

When the vehicle is driven on loose surfaces, such as sand, gravel, or deep snow, or if the vehicle gets stuck, pushing the four–wheel drive lock switch to ensure that the engine torque is applied to the 4 wheels.

When the four–wheel drive lock switch is pushed, the four–wheel drive lock indicator light blinks twice and remains on until the four–wheel drive lock is canceled.

To cancel the four–wheel drive lock, push the switch once again and the four–wheel drive lock indicator light will go off.

When the vehicle speed exceeds 40 km/h (25 mph), the four–wheel drive lock will be cancelled automatically.

The four–wheel drive lock indicator will come on for a few seconds when the engine switch is turned to the “ON” position.

If the indicator light does not come on when the engine switch is turned to the “ON” position or the four–wheel drive lock switch is pushed, contact your Toyota dealer.

NOTICE

Use the four–wheel drive lock only when driving on the loose surfaces, such as sand, gravel, or deep snow, or if the vehicle gets stuck. After the four–wheel drive lock is used to provide traction, cancel the four–wheel drive lock. Using the four–wheel drive lock at other times may cause damage to the four–wheel drive system.

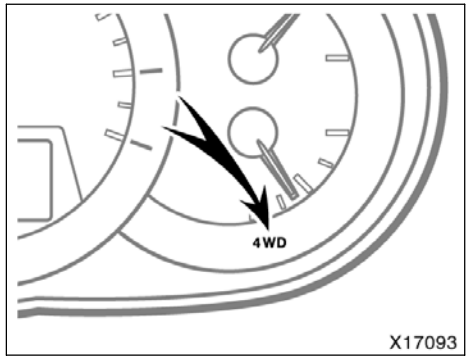

SYSTEM FAILURE WARING

The “4WD” warning light warns that there is a problem somewhere in the active torque control 4WD system.

The light will come on when the engine switch is turned to the “ON” position. When the system works properly, the light turns off after a few seconds.

If the warning light does not come on when the engine switch is turned to the “ON” position, contact your Toyota dealer to service the vehicle.

If the “4WD” warning light flashes...

This indicates that the driveline temperature has become too high. Without turning off the engine, do either of the following to cool the driveline:

- Reduce vehicle speed until the light goes off.
- Stop the vehicle at a safe place and allow the engine to idle until the light goes off.

If operation of the vehicle is continued while the light is flashing, the system automatically shuts off the engine torque that is applied to the rear wheels to protect the driveline. If this happens, the light will flash faster.

When the driveline temperature falls enough, the light will go off.

If the “4WD” warning light remains on...

This indicates that the system may not work properly. Contact your Toyota dealer to service your vehicle.

Traction control system

The traction control system automatically helps prevent the spinning of the front wheels (two–wheel drive models) or 4 wheels (four–wheel drive models) when the vehicle is started or accelerated on slippery road surfaces.

When the engine switch is turned to the “ON” position, the system automatically turns on.

⚠ CAUTION

Under certain slippery road conditions, full traction of the vehicle and power to the front wheels (two–wheel drive models) or 4 wheels (four–wheel drive models) cannot be maintained, even though the traction control system is in operation. Do not drive the vehicle under any speed or maneuvering conditions which may cause the vehicle to lose traction control. If the road surface is covered with ice or snow, your vehicle should be fitted with snow tires or tire chains. Always drive at a speed that is appropriate for the present road conditions.

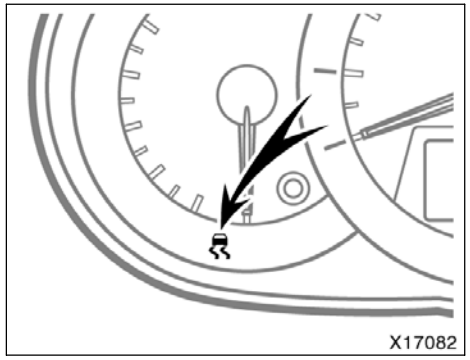

A sound may be heard from the engine compartment for a few seconds when the engine is started or just after the vehicle begins to move. This means that the system is in the self–check mode. This sound does not indicate a malfunction.

When the traction control system is operating, the following conditions occur:

- The system controls the spinning of the front wheels (two–wheel drive models) or 4 wheels (four–wheels drive models). At this time, the slip indicator light blinks.
- The vehicle may vibrate or make a noise due to brake operation. This indicates the system is functioning properly.

The slip indicator light comes on for a few seconds when the engine switch is turned to the “ON” position. If the indicator light does not come on when the engine switch is turned to the “ON” position, contact your Toyota dealer.

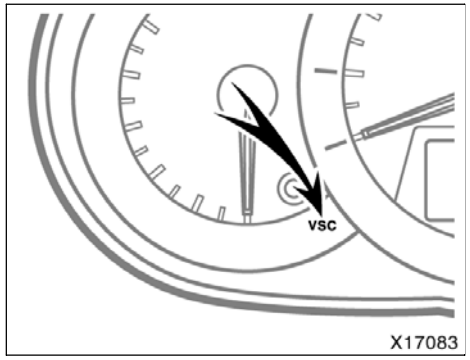

“VSC” warning light

This light warns that there is a problem somewhere in the following systems:

- Traction control system
- “AUTO LSD” system
- Enhanced vehicle stability control system
- Downhill assist control system
- Hill–start assist control system

The light will come on when the engine switch is turned to the “ON” position. When the systems are work properly, the light turns off after a few seconds.

If the light comes on while driving, all the above systems will not work. In such a case, the brakes will operate when applied (no electronic assistance will be available), and it will be possible to continue driving the vehicle.

In the following cases, contact your Toyota dealer:

- The warning light does not come on when the engine switch is turned to the “ON” position.
- The warning light remains on after the engine switch is turned to the “ON” position.
- The warning light comes on while driving.

“AUTO LSD” system (two–wheel drive models)

The “AUTO LSD” system aids traction by using the traction control system to control engine performance and braking when one of the front wheels begins to spin.

This system is used only when wheel spinning occurs in a ditch or on a rough surface.

This system is effective in case one of the front wheels is spinning.

NOTICE

Do not use the “AUTO LSD” system in conditions other than the above. A much greater steering effort and more careful cornering control will be required.

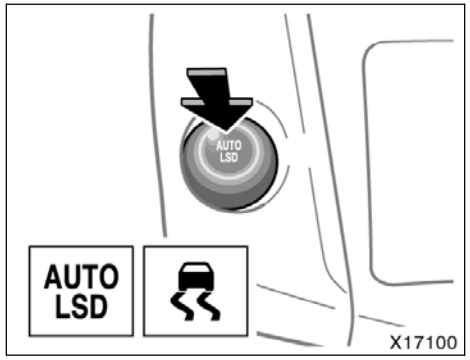

To turn on the system, push the “AUTO LSD” switch when the vehicle is stopped.

The “AUTO LSD” indicator light will come on and remain on while the system is on. While the system is operating, the slip indicator light will also flash.

To turn off the system, push the “AUTO LSD” switch again and the “AUTO LSD” indicator light will go off.

If the vehicle speed exceeds 50 km/h (31 mph), this system will be cancelled automatically.

The “AUTO LSD” indicator light will come on for a few seconds when the engine switch is turned to the “ON” position. If the indicator light does not come on when the engine switch is turned to the “ON” position or the “AUTO LSD” switch is pushed, contact your Toyota dealer.

If the brake actuator temperature becomes too high, a buzzer will sound for about 3 seconds. (The slip indicator light will also be lit.) The system will temporarily stop operating in order to protect the brake actuator. Although “AUTO LSD” system is not operating, it is still possible to continue your driving.

The operation of the system will be automatically restored after the actuator cools down. After operation is restored, the slip indicator light will go off.

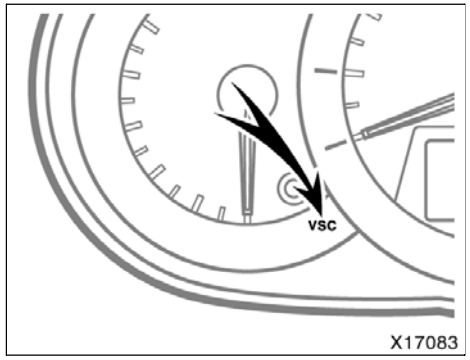

“VSC” warning light

This light warns that there is a problem somewhere in the following systems:

- Traction control system
- “AUTO LSD” system
- Enhanced vehicle stability control system
- Downhill assist control system
- Hill–start assist control system

When the engine switch is turned to the “ON” position, the light will come on. When the systems are work properly, the light turns off after a few seconds.

If the light comes on while driving, all the above systems will not work. In such a case, the brakes will operate when applied (no electronic assistance will be available), and it will be possible to continue driving the vehicle.

In the following cases, contact your Toyota dealer:

- The warning light does not come on when the engine switch is turned to the “ON” position.
- The warning light remains on after the engine switch is turned to the “ON” position.
- The warning light comes on while driving.

Enhanced vehicle stability control system (two–wheel drive vehicles)

The vehicle stability control system helps provide integrated control of the such systems as the anti–lock brake, brake assist, traction control, engine control, electric power steering. This system automatically controls the brakes, engine and power steering to help prevent the vehicle from skidding when cornering on a slippery road surface or operating steering wheel abruptly.

This system activates when the vehicle speed exceeds about 15 km/h (9 mph).

A sound may be heard from the engine compartment for a few seconds when the engine is started or just after the vehicle begins to move. This means that the system is in the self–check mode. This sound does not indicate a malfunction.

CAUTION

- **Do not rely excessively on the vehicle stability control system. Even if the vehicle stability control system is operating, you must always drive carefully and attentively to avoid death or serious injury. Reckless driving will result in an unexpected accident. If the slip indicator light flashes, and an alarm sounds, special care should be taken while driving.**
- **Use only tires of the specified size. The size, manufacturer, brand and tread pattern for all 4 tires should be the same. If you use the tires other than specified, or different type or size, the vehicle stability control system may not function correctly. When replacing the tires or wheels, contact your Toyota dealer. (See “Checking and replacing tires” on page 410 in Section 7–2.)**
- **In situations where the road surface is covered with ice or snow, your vehicle should be fitted with snow tires or tire chains.**

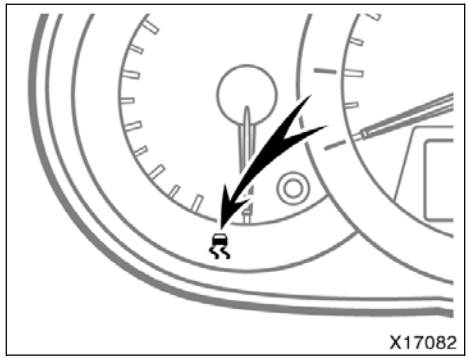

If the vehicle is going to skid during driving, the slip indicator light blinks and an alarm sounds intermittently. Special care should be taken while driving.

The slip indicator light comes on for a few seconds when the engine switch is turned to the “ON” position. If the indicator light does not come on when the engine switch is turned to the “ON” position, contact your Toyota dealer.

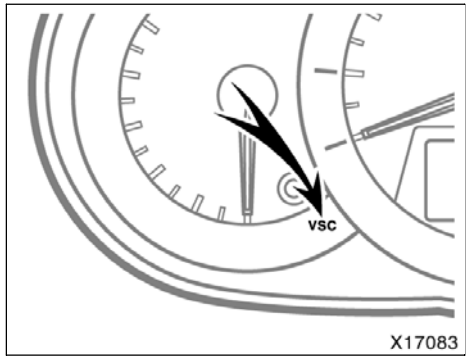

“VSC” warning light

This light warns that there is a problem somewhere in the following systems:

- Traction control system
- “AUTO LSD” system
- Enhanced vehicle stability control system
- Downhill assist control system
- Hill–start assist control system

The light will come on when the engine switch is turned to the “ON” position. When the systems are work properly, the light turns off after a few seconds.

If the light comes on while driving, all the above systems will not work. In such a case, the brakes will operate when applied (no electronic assistance will be available), and it will be possible to continue driving the vehicle.

In the following cases, contact your Toyota dealer:

- The warning light does not come on when the engine switch is turned to the “ON” position.
- The warning light remains on after the engine switch is turned to the “ON” position.
- The warning light comes on while driving.

Enhanced vehicle stability control system (four–wheel drive models)

The vehicle stability control system helps provide integrated control of the such systems as the anti–lock brake, brake assist, traction control, engine control, electric power steering, active torque control 4WD. This system automatically controls the brakes, engine and power steering as well as driving force to all the 4 wheels to help prevent the vehicle from skidding when cornering on a slippery road surface or operating steering wheel abruptly.

This system activates when the vehicle speed exceeds about 15 km/h (9 mph).

A sound may be heard from the engine compartment for a few seconds when the engine is started or just after the vehicle begins to move. This means that the system is in the self–check mode. This sound does not indicate a malfunction.

CAUTION

- **Do not rely excessively on the vehicle stability control system. Even if the vehicle stability control system is operating, you must always drive carefully and attentively to avoid death or serious injury. Reckless driving will result in an unexpected accident. If the slip indicator light flashes, and an alarm sounds, special care should be taken while driving.**
- **Use only tires of the specified size. The size, manufacturer, brand and tread pattern for all 4 tires should be the same. If you use the tires other than specified, or different type or size, the vehicle stability control system may not function correctly. When replacing the tires or wheels, contact your Toyota dealer. (See “Checking and replacing tires” on page 410 in Section 7–2.)**
- **In situations where the road surface is covered with ice or snow, your vehicle should be fitted with snow tires or tire chains.**

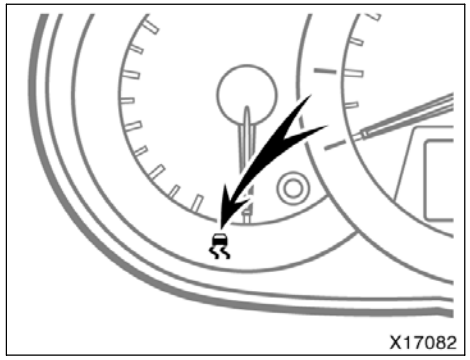

If the vehicle is going to skid during driving, the slip indicator light blinks and an alarm sounds intermittently. Special care should be taken while driving.

The slip indicator light comes on for a few seconds when the engine switch is turned to the “ON” position. If the indicator light does not come on when the engine switch is turned to the “ON” position, contact your Toyota dealer.

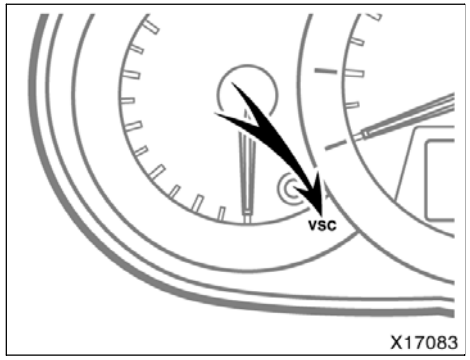

“VSC” warning light

This light warns that there is a problem somewhere in the following systems:

- Traction control system
- Enhanced vehicle stability control system
- Downhill assist control system
- Hill–start assist control system

The light will come on when the engine switch is turned to the “ON” position. When the systems are work properly, the light turns off after a few seconds.

If the light comes on while driving, all the above systems will not work. In such a case, the brakes will operate when applied (no electronic assistance will be available), and it will be possible to continue driving the vehicle.

In the following cases, contact your Toyota dealer:

- The warning light does not come on when the engine switch is turned to the “ON” position.
- The warning light remains on after the engine switch is turned to the “ON” position.
- The warning light comes on while driving.

Downhill assist control system

The downhill assist control system assists the deceleration of the engine brake when you drive down a steep hill. When you are driving down a hill, pushing the “DAC” switch turns on the system. If the vehicle is traveling at a speed of 25 km/h (15 mph) or less, you can descend at a constant speed.

⚠ CAUTION

Do not rely excessively on the downhill assist control system. It may not be able to maintain a low speed over road surfaces or off–road surfaces on which sliding can easily occur, such as extremely steep slopes or icy or muddy roads.

TO ACTIVATE THE DOWNHILL ASSIST CONTROL SYSTEM

1. **In order to make full use of the engine brake, put the transmission selector lever in “L” (forward) or “R” (reverse).**

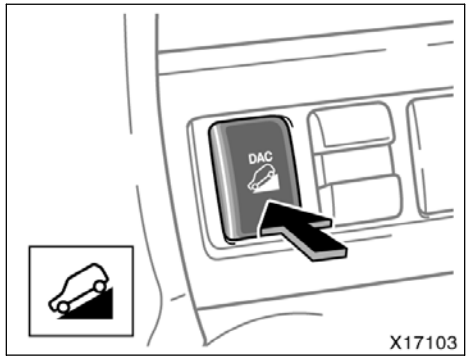

2. **Push the “DAC” switch to turn the system on. The downhill assist control system indicator light will come on.**

If the downhill assist control system indicator light flashes, the selector lever may not be in “L” or “R”.

If the indicator light does not come on when the switch is pushed, or the indicator light flashes when the selector lever is in “L” or “R”, contact your Toyota dealer.

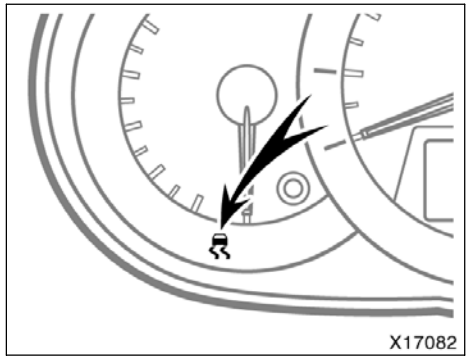

With the vehicle traveling at a speed of 25 km/h (15 mph) or less, release the brake pedal and accelerator pedal to activate the system. The vehicle will descend the hill at a low speed.

While the system is operating, the slip indicator light will flash and the stoplights and high mounted stoplight will be lit. A sound may also occur during the operation. This does not indicate a malfunction.

If the brakes are applied while the system is operating, a kickback from the brake pedal may result and a sound may occur. This does not indicate a malfunction.

If the “DAC” switch is pushed to turn the system off while it is in operation, the system will stop operating gradually. The downhill assist control system indicator light will flash to alert the driver. To continue driving at a low speed, push the “DAC” switch to turn the system on.

The slip indicator light and downhill assist control system indicator light come on for a few seconds when the engine switch is turned to the “ON” position. If any of the indicator lights does not come on when the engine switch is turned to the “ON” position, contact your Toyota dealer.

If the brake actuator temperature becomes too high, the downhill assist control system indicator light will flash and a buzzer will start to sound intermittently. This indicates that the system cannot operate for much longer. In this case, stop the vehicle immediately in a safe place.

If the system continues to operate while driving, the buzzer will sound for about 3 seconds. The system will temporarily stop operating in order to protect the brake actuator. Although the downhill assist control system is not operating, it is still possible to continue your driving.

The operation of the system will be automatically restored after the actuator cools down. The downhill assist control system indicator light changes from flash to remain on after operation is restored.

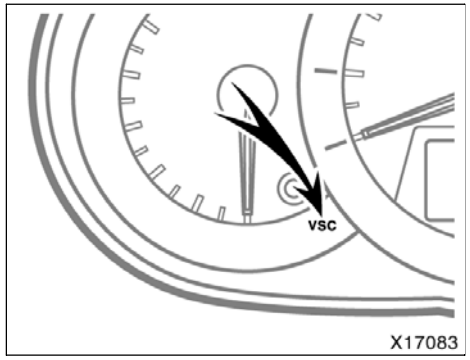

“VSC” warning light

This light warns that there is a problem somewhere in the following systems:

- Traction control system
- “AUTO LSD” system
- Enhanced vehicle stability control system
- Downhill assist control system
- Hill–start assist control system

When the engine switch is turned to the “ON” position, the light will come on. When the systems are work properly, the light turns off after a few seconds.

If the light comes on while driving, all the above systems will not work. In such a case, the brakes will operate when applied (no electronic assistance will be available), and it will be possible to continue driving the vehicle.

In the following cases, contact your Toyota dealer:

- The warning light does not come on when the engine switch is turned to the “ON” position.
- The warning light remains on after the engine switch is turned to the “ON” position.
- The warning light comes on while driving.

Hill–start assist control system

The hill–start assist control system assists in starting to drive a steep or a slippery hill. When you start to move up a hill slope, the system helps to prevent the vehicle from rolling backward in the interval while moving the foot from the brake pedal to the accelerator pedal.

CAUTION

- **Do not rely excessively on the hill–start assist control system. The vehicle may not be able to start smoothly on road surfaces or off–road surfaces such as extremely steep slopes or icy roads, on which sliding can occur very easily.**
- **Do not use the hill–start assist control system to park the vehicle. This system is not designed as a function for parking the vehicle on a uphill slope.**

TO ACTIVATE THE HILL–START ASSIST CONTROL SYSTEM

The hill–start assist control system will operate for maximum of 2 seconds. The brake pedal must be depressed further to activate the system when all of the following conditions apply with the brake pedal is depressed:

At this time, one beep will be heard.

- When the selector lever is not in “P”
- When the accelerator pedal is not depressed
- When the parking brake is not applied
- When the vehicle is stopped

The system is designed to operate when the vehicle is starting on uphill slope; therefore, if the transmission selector lever is in “P”, it will not operate.

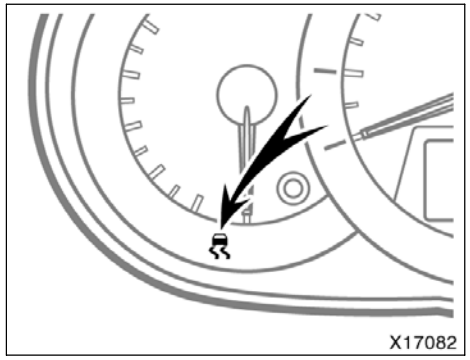

When the hill–start assist control system is operating, the slip indicator light flashes and the stoplights and high mounted stoplight are lit.

When any of the following is performed, the system will stop operation. At this time, two beeps will be heard and the slip indicator light will go off.

- Shifting the selector lever to “P”
- Applying the parking brake
- Depressing the brake pedal

If the accelerator pedal is depressed, the system will also stop operation without beep sounds.

The hill–start assist control system operates for a maximum of 2 seconds. If the vehicle is not started within 2 seconds, two beeps will be heard and the system will gradually stop operating.

The hill–start control system is not designed to park the vehicle on uphill slope. When parking the vehicle, be sure to apply the parking brake.

The slip indicator light comes on for a few seconds when the engine switch is turned to the “ON” position. If the indicator light does not come on when the engine switch is turned to the “ON” position, contact your Toyota dealer.

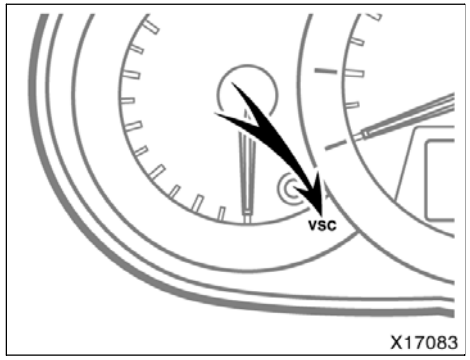

“VSC” warning light

This light warns that there is a problem somewhere in the following systems:

- Traction control system
- “AUTO LSD” system
- Enhanced vehicle stability control system
- Downhill assist control system
- Hill–start assist control system

When the engine switch is turned to the “ON” position, the light will come on. If the systems are work properly, the light turns off after a few seconds.

If the light comes on while driving, all the above systems will not work. In such a case, the brakes will operate when applied (no electronic assistance will be available), and it will be possible to continue driving the vehicle.

In the following cases, contact your Toyota dealer:

- The warning light does not come on when the engine switch is turned to the “ON” position.
- The warning light remains on after the engine switch is turned to the “ON” position.
- The warning light comes on while driving.

Tire pressure warning system

The tire pressure warning system warns you that the tire inflation pressure is low.

The tire pressure warning system is not a substitute for checking normal tire inflation pressure. Check the tire inflation pressure with a tire pressure gauge regularly.

⚠ CAUTION

The warning system may not activate immediately if blowout or sudden air loss should occur.

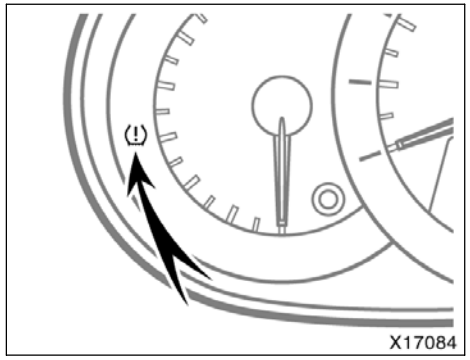

The tire pressure warning light comes on when the engine switch is in “ON” position and goes off after a few seconds. This means the tire pressure warning system is operating properly. If the tire inflation pressure becomes low, the light comes on again. In this case, adjusting the tire inflation pressure will turn off the light after a few minutes. If the light comes on after blinking for 1 minute, the tire pressure warning system is not working properly.

Indicator status	Meanings	Do this
ON	Tire inflation pressure is low	Adjust the tire inflation pressure
ON after blinking for 1 minute	Tire pressure warning system malfunction	Have the system checked at your Toyota dealer

⚠ CAUTION

If the tire pressure warning light comes on, be sure to observe the following precautions. Failure to do so could cause loss of vehicle control and result in death or serious injury.

- **Stop your vehicle in a safe place as soon as possible. Adjust the tire inflation pressure immediately.**

- **If the tire pressure warning light comes on even after tire inflation pressure adjustment, it is probable that you have a flat tire. Check the tires. If the tire is flat, change to the spare tire and have the flat tire repaired by the nearest Toyota dealer.**
- **Avoid abrupt maneuvering and braking. If the vehicle tires deteriorate, you could lose control of the steering wheel or the brakes.**

The tire pressure warning light may turn on due to natural causes such as natural air leaks or tire inflation pressure changes caused by temperature. In this case, adjusting the tire inflation pressure will turn off the light after a few minutes.

The spare tire is also equipped with the tire pressure warning valve and transmitter. The tire pressure warning light will turn on if the tire inflation pressure of the spare tire is low. If a tire goes flat, even though the flat tire is replaced with the spare tire, the warning light does not turn off. Replace the spare tire with the repaired tire and adjust the proper tire inflation pressure. The tire pressure warning light will turn off after a few minutes.

⚠ CAUTION

Each tire, including the spare (if provided), should be checked monthly when cold and inflated to the inflation pressure recommended by the vehicle manufacturer on the vehicle placard or tire inflation pressure label (tire and load information label). (If your vehicle has tires of a different size than the size indicated on the vehicle placard or tire inflation pressure label (tire and load information label), you should determine the proper tire inflation pressure for those tires.)

As an added safety feature, your vehicle has been equipped with a tire pressure monitoring system (TPMS–tire pressure warning system) that illuminates a low tire pressure telltale (tire pressure warning light) when one or more of your tires is significantly under–inflated. Accordingly, when the low tire pressure telltale (tire pressure warning light) illuminates, you should stop and check your tires as soon as possible, and inflate them to the proper pressure. Driving on a significantly under–inflated tire causes the tire to overheat and can lead to tire failure. Under–inflation also reduces fuel efficiency and tire tread life, and may affect the vehicle’s handling and stopping ability.

Please note that the TPMS (tire pressure warning system) is not a substitute for proper tire maintenance, and it is the driver’s responsibility to maintain correct tire pressure, even if under–inflation has not reached the level to trigger illumination of the TPMS low tire pressure telltale (tire pressure warning light).

Your vehicle has also been equipped with a TPMS (tire pressure warning system) malfunction indicator to indicate when the system is not operating properly. The TPMS (tire pressure warning system) malfunction indicator is combined with the low tire pressure telltale (tire pressure warning light). When the system detects a malfunction, the telltale will flash for approximately one minute and then remain continuously illuminated. This sequence will continue upon subsequent vehicle start–ups as long as the malfunction exists. When the malfunction indicator is illuminated, the system may not be able to detect or signal low tire pressure as intended.

TPMS (tire pressure warning system) malfunctions may occur for a variety of reasons, including the installation of replacement or alternate tires or wheels on the vehicle that prevent the TPMS (tire pressure warning system) from functioning properly. Always check the TPMS (tire pressure warning system) malfunction telltale after replacing one or more tires or wheels on your vehicle to ensure that the replacement or alternate tires and wheels allow the TPMS (tire pressure warning system) to continue to function properly.

NOTICE

- ***Do not use liquid sealants for a flat tire as tire pressure warning valve and transmitter will be damaged.***
- ***When the tires must be repaired or replaced, have them repaired or replaced by the nearest Toyota dealer or an authorized tire dealer. The tire pressure warning valves and transmitters will be affected by the installation or removal of tires.***

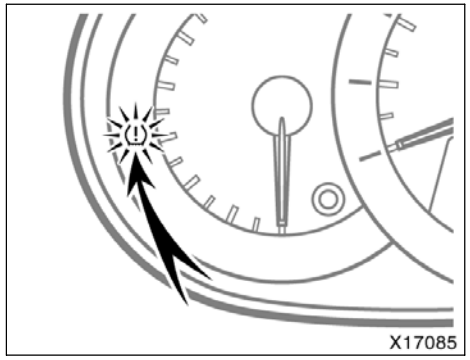

IF THE TIRE PRESSURE WARNING LIGHT COMES ON AFTER BLINKING FOR 1 MINUTE···

If the tire pressure warning light comes on after blinking for 1 minute when the engine switch is in “ON” position, the tire pressure warning system is not working properly.

The system will be disabled in the following conditions:
(When the condition becomes normal, the system will work properly.)

- If tires not equipped with tire pressure warning valves and transmitters are used.

- If the ID code on the tire pressure warning valves and transmitters is not registered in the tire pressure warning computer.
- If the tire inflation pressure is more than 500 kPa (5.1 kgf/cm^2 or bar, 73 psi).

The system may be disabled in the following conditions:
(When the condition becomes normal, the system will work properly.)

- If electronic devices or facilities using similar radio wave frequencies are nearby.
- If a radio set at similar frequencies is in use in the vehicle.
- If a window tint that affects the radio wave signals is installed.
- If there is a lot of snow or ice on the vehicle, in particular around the wheels or wheel housings.
- If non–genuine Toyota wheels are used.
- If tire chains are used.
- If the spare tire is in a location subject to poor radio wave signal reception.
- If a large metallic object which can interfere with signal reception is put in the luggage compartment.

If the tire pressure warning light continues to come on after blinking for 1 minute when the engine switch is in “ON” position, have the system checked by your Toyota dealer.

Even if you use genuine wheels, the tire pressure warning system may not work properly with some types of tires.

For vehicles sold in U.S.A.

This device complies with Part 15 of the FCC Rules. Operation is subject to the following two conditions:

(1) This device may not cause harmful interference, and (2) this device must accept any interference received, including interference that may cause undesired operation.

NOTICE:
This equipment has been tested and found to comply with the limits for a Class B digital device, pursuant to Part 15 of the FCC Rules. These limits are designed to provide reasonable protection against harmful interference in a residential installation. This equipment generates, uses and can radiate radio frequency energy and, if not installed and used in accordance with the instructions, may cause harmful interference to radio communications. However, there is no guarantee that interference will not occur in a particular installation. If this equipment does cause harmful interference to radio or television reception, which can be determined by turning the equipment off and on, the user is encouraged to try to correct the interference by one or more of the following measures:

- Reorient or relocate the receiving antenna.
- Increase the separation between the equipment and receiver.

- Connect the equipment into an outlet on a circuit different from that to which the receiver is connected.
- Consult the dealer or an experienced radio/TV technician for help.

FCC WARNING:
Changes or modifications not expressly approved by the party responsible for compliance could void the user’s authority to operate the equipment.

For vehicles sold in Canada

Operation is subject to the following two conditions:

(1) this device may not cause interference, and (2) this device must accept any interference, including interference that may cause undesired operation of the device.

REPLACING TIRES AND WHEELS

When replacing the tires and wheels, be sure to install tire pressure warning valves and transmitters. ID codes on the tire pressure warning valves and transmitters are registered in the tire pressure warning computer. When replacing a tire pressure warning valve and transmitter, it is necessary to register the ID code of tire pressure warning valve and transmitter. Have the ID code registered by your Toyota dealer.

If the ID code is not registered, the system will not work properly. After driving about 20 minutes, the tire pressure warning light comes on after blinking for 1 minute to indicate a system malfunction.

NOTICE

When the tires or tire pressure warning valves and transmitters must be replaced, have them replaced by your Toyota dealer. The tire pressure warning valves and transmitters will be affected by the installation or removal of tires.

Parking brake

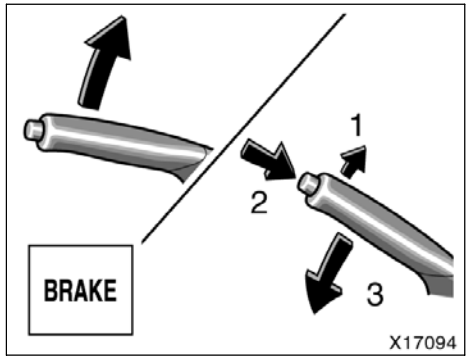

For the U.S.A.

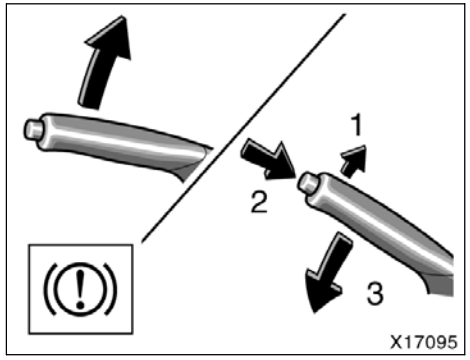

For Canada

When parking, firmly apply the parking brake to avoid inadvertent creeping.

To set: Pull up the lever. For better holding power, first depress the brake pedal and hold it while setting the parking brake.
To release: Pull up the lever slightly (1), press the lock release button (2), and lower (3).

To remind you that the parking brake is set, the parking brake reminder light in the instrument panel remains on until you release the parking brake.

⚠ CAUTION

Before driving, be sure the parking brake is fully released and the parking brake reminder light is off.

Cruise control

The cruise control is designed to maintain a set cruising speed without requiring the driver to operate the accelerator. Cruising speed can be set to any speed above 40 km/h (25 mph).

Within the limits of the engine’s capabilities, cruising speed can be maintained up or down grades. However, changes in vehicle speed may occur on steeper grades.

⚠ CAUTION

- **To help maintain maximum control of your vehicle, do not use the cruise control when driving in heavy or varying traffic, or on slippery (rainy, icy or snow–covered) or winding roads.**
- **Be careful about vehicle speed as it may increase when driving downhill with the cruise control on.**

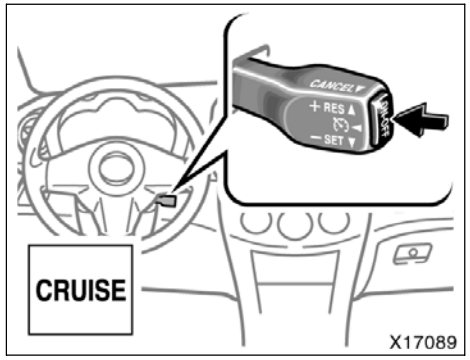

TURNING THE SYSTEM ON AND OFF

To turn the cruise control on, press the “ON–OFF” button. The “CRUISE” indicator light on the instrument panel will come on to indicate that the cruise control is operational. Pressing the “ON–OFF” button again turns the system off.

When the system is turned off, cruising speed must be reset when the cruise control is turned on again.

⚠ CAUTION

To avoid accidentally engaging the cruise control, turn the system off when it is not in use. Make sure the “CRUISE” indicator light is off.

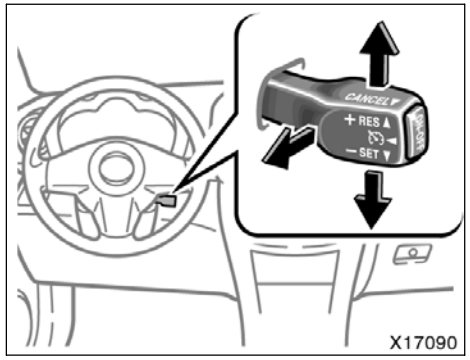

SETTING THE CRUISING SPEED

The transmission must be in “D”, “3” (4–speed) or “4” (5–speed) before you set the cruising speed.

Bring your vehicle to the desired speed, push the lever down in the “– SET” direction and release it. This sets the vehicle at that speed. If the speed is not satisfactory, tap the lever up for a faster speed, or tap it down for a slower speed. Each tap changes the set speed by 1.6 km/h (1.0 mph). You can now take your foot off the accelerator pedal.

If you need acceleration—for example, when passing—depress the accelerator pedal enough for the vehicle to exceed the set speed. When you release it, the vehicle will return to the speed set prior to the acceleration.

CANCELLING THE CRUISE CONTROL

The cruise control may be temporarily cancelled by the driver or by the system itself under certain circumstances. Temporary cancellation allows the set cruising speed to remain in memory.

The cruise control can be temporarily cancelled by doing the following:

- Pulling the lever in the “CANCEL” direction and releasing it
- Depressing the brake pedal

Under certain circumstances, the cruise control is temporarily cancelled:

- When vehicle speed falls below 40 km/h (25 mph)
- When vehicle stability control is activated

When vehicle speed drops 16 km/h (10 mph) below the set speed, the cruise control is cancelled and the set speed is erased from memory.

The “CRUISE” indicator light remains on to indicate that the system is still in operation.

To turn the cruise control off, press the “ON–OFF” button. Make sure the “CRUISE” indicator light is off.

If the cruise control automatically cancels out other than for the above cases, have your vehicle checked by your Toyota dealer at the earliest opportunity.

RESUMING THE CRUISE CONTROL

If the cruise control is temporarily cancelled, the cruising speed can be resumed by pushing the lever up in the “+ RES” direction.

Vehicle speed must be above 40 km/h (25 mph).

RESETTING TO A FASTER SPEED

Push the lever up in the “+ RES” direction and hold it. Release the lever when the desired speed is attained. While the lever is held up, the vehicle will gradually gain speed.

However, a faster way to reset is to accelerate the vehicle and then push the lever down in the “– SET” direction.

RESETTING TO A SLOWER SPEED

Push the lever down in the “– SET” direction and hold it. Release the lever when the desired speed is attained. While the lever is held down, the vehicle speed will gradually decrease.

A sound may occur due to brake operation while the vehicle speed is decreasing. This does not indicate a malfunction.

However, a faster way to reset is to depress the brake pedal and then push the lever down in the “– SET” direction.

Even if you downshift the transmission from the “D” position to “3” (4–speed) or “4” (5–speed) with the cruise control on, engine braking will not be enabled because the cruise control is not cancelled. To decrease the vehicle speed, reset to a slower speed with the cruise control lever or depress the brake pedal. If you use the brake pedal, cruise control is cancelled.

CRUISE CONTROL FAILURE WARNING

If the “CRUISE” indicator light flashes when using the cruise control, press the “ON–OFF” button to turn the system off and then press it again to turn it on.

If any of the following conditions then occurs, there is some trouble in the cruise control system.

- The indicator light does not come on.
- The indicator light flashes again.
- The indicator light goes out after it comes on.

If this is the case, contact your Toyota dealer and have your vehicle inspected.

SECTION 1 – 8

OPERATION OF INSTRUMENTS AND CONTROLS

Audio and hands–free phone systems

Reference 172
Using your audio system 173
AUX adapter 191
Audio remote controls 191
Rear seat entertainment system 194
Audio/video system operating hints 232
Hands–free phone system 239

Reference

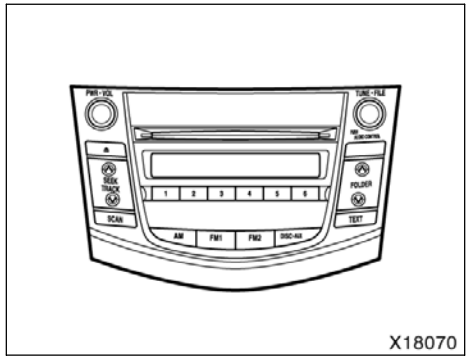

Type 1: AM·FM radio/compact disc player (with compact disc changer controller)

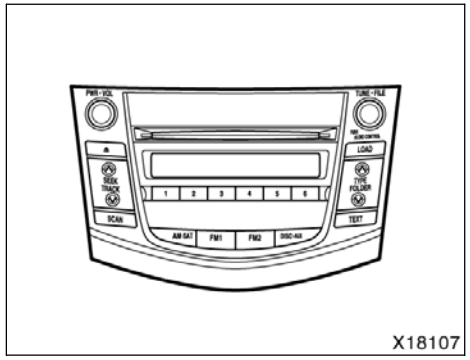

Type 2–1: AM·FM radio/compact disc player with changer (with XM® Satellite Radio* controller)

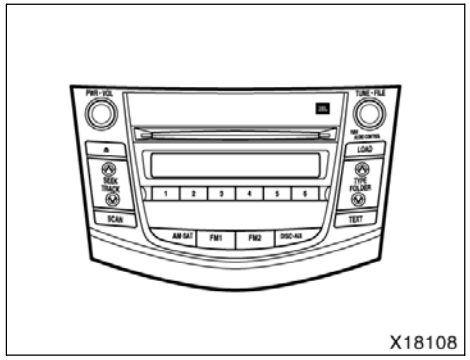

Type 2–2: AM·FM radio/compact disc player with changer (with XM® Satellite Radio* controller)

*: Use of satellite radio requires XM® tuner and service. Contact your Toyota dealer for details.

Using your audio system——Some basics

This section describes some of the basic features on Toyota audio systems. Some information may not pertain to your system.

Your audio system works when the engine switch is in the “ACC” or “ON” position.

TURNING THE SYSTEM ON AND OFF

Push “PWR·VOL” to turn the audio system on and off.

Push “AM”, “AM·SAT”*, “FM1”, “FM2” or “DISC·AUX” to turn on that function without pushing “PWR·VOL”. To turn on the compact disc player, a compact disc must be loaded in the player.

You can turn on compact disc player by inserting a compact disc.

You can turn off the compact disc player by ejecting the compact disc. If the audio system was previously off, then the entire audio system will be turned off when you eject the compact disc. If other function was previously playing, it will come on again.

*: Use of satellite radio requires XM® tuner and service. Contact your Toyota dealer for details.

SWITCHING BETWEEN FUNCTIONS

Push “AM”, “AM·SAT”*, “FM1”, “FM2”, “DISC·AUX” if the system is already on but you want to switch from one function to other.

*: Use of satellite radio requires XM® tuner and service. Contact your Toyota dealer for details.

LISTENING TO THE XM® SATELLITE RADIO BROADCAST* (type 2–1 and 2–2)

To listen to a satellite radio broadcast in your vehicle, an additional genuine Toyota satellite receiver and antenna (or equivalents) must be purchased and installed. A subscription to the XM® Satellite Radio service is also necessary.

How to subscribe to an XM® Satellite Radio

An XM® Satellite Radio is a tuner designed exclusively to receive broadcasts provided under a separate subscription. Availability is limited to the 48 contiguous U.S. states and 10 Canadian provinces.

How to subscribe:
You must enter into a separate service agreement with the XM® Satellite Radio in order to receive satellite broadcast programming in the vehicle. Additional activation and service subscription fees apply that are not included in the purchase price of the vehicle and optional digital satellite tuner. For complete information on subscription rates and terms, or to subscribe to the XM® Satellite Radio,

U.S.A.—

Visit on the web at www.xmradio.com or call 1–800–967–2346.

Canada—

Visit on the web at www.xmradio.ca or call 1–877–438–9677.

The XM® Satellite Radio is solely responsible for the quality, availability and content of the satellite radio services provided, which are subject to the terms and conditions of the XM® Satellite Radio customer service agreement.

Customers should have their radio ID ready; the radio ID can be found by tuning to “channel 000” on the radio. For details, see “Displaying the radio ID” below.

All fees and programming are the responsibility of the XM® Satellite Radio and are subject to change.

Satellite tuner technology notice:
Toyota’s satellite radio tuners are awarded Type Approval Certificates from XM® Satellite Radio Inc. as proof of compatibility with the services offered by the XM® Satellite Radio.

Displaying the radio ID

Each XM® tuner is identified with a unique radio ID. You will need the radio ID when activating XM® service or when reporting a problem.

If you select the “CH 000” using the “TUNE·FILE” knob, the ID code of 8 alphanumeric characters appears. If you select another channel, display of the ID code is canceled. The channel (000) alternates the display between the radio ID and the specific radio ID code.

*: Use of satellite radio requires XM® tuner and service. Contact your Toyota dealer for details.

TONE AND BALANCE

For details about your system’s tone and balance controls, see the description of your own system.

SRS

Type 1 and 2–1 audio systems utilize SRS FOCUS® and SRS TruBass® audio enhancement technologies, under license from SRS Labs, Inc., in all modes except AM radio mode.

FOCUS, TruBass, SRS and ®symbols are trademarks of SRS Labs, Inc.
FOCUS and TruBass technologies are incorporated under license from SRS Labs, Inc.

Tone

How good an audio program sounds to you is largely determined by the mix of the treble, midrange (type 2–2) and bass levels. In fact, different kinds of music and vocal programs usually sound better with different mixes of treble, midrange and bass.

Balance

A good balance of the left and right stereo channels and of the front and rear sound levels is also important.

Keep in mind that if you are listening to a stereo recording or broadcast, changing the right/left balance will increase the volume of one group of sounds while decreasing the volume of other.

YOUR RADIO ANTENNA

Your vehicle has a mast type antenna.

To remove the antenna, carefully turn it counterclockwise.

NOTICE

To prevent damage to the antenna, make sure it is removed before driving your Toyota through an automatic car wash.

YOUR COMPACT DISC PLAYER (type 1)

When you insert a disc, gently push it in with the label side up. The player will play from track 1 through to the end of the disc. Then it will play from track 1 again.

NOTICE
Never try to disassemble or oil any part of the compact disc player. Do not insert anything other than compact discs into the slot.

The player is intended for use with 12 cm (4.7 in.) discs only.

YOUR COMPACT DISC PLAYER WITH CHANGER (type 2)

When you insert a disc, push the “LOAD” button and gently push the disc in with the label side up. This compact disc player can store up to six discs. The player will play from track 1 through to the end of the disc. Then it will play from track 1 of the next disc.

The player is intended for use with 12 cm (4.7 in.) discs only.

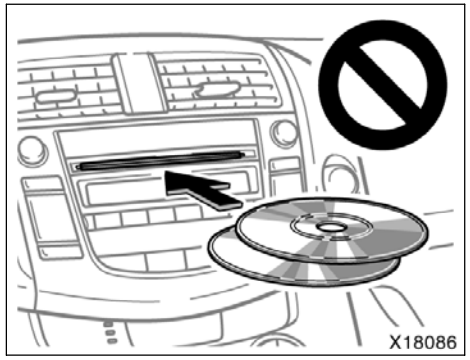

NOTICE
◆***Do not stack up two discs for insertion, or it will cause damage to the compact disc changer. Insert only one compact disc into slot at a time.*** ◆***Never try to disassemble or oil any part of the compact disc player. Do not insert anything except a compact disc into the slot.***

—Controls and features

▶Type 1

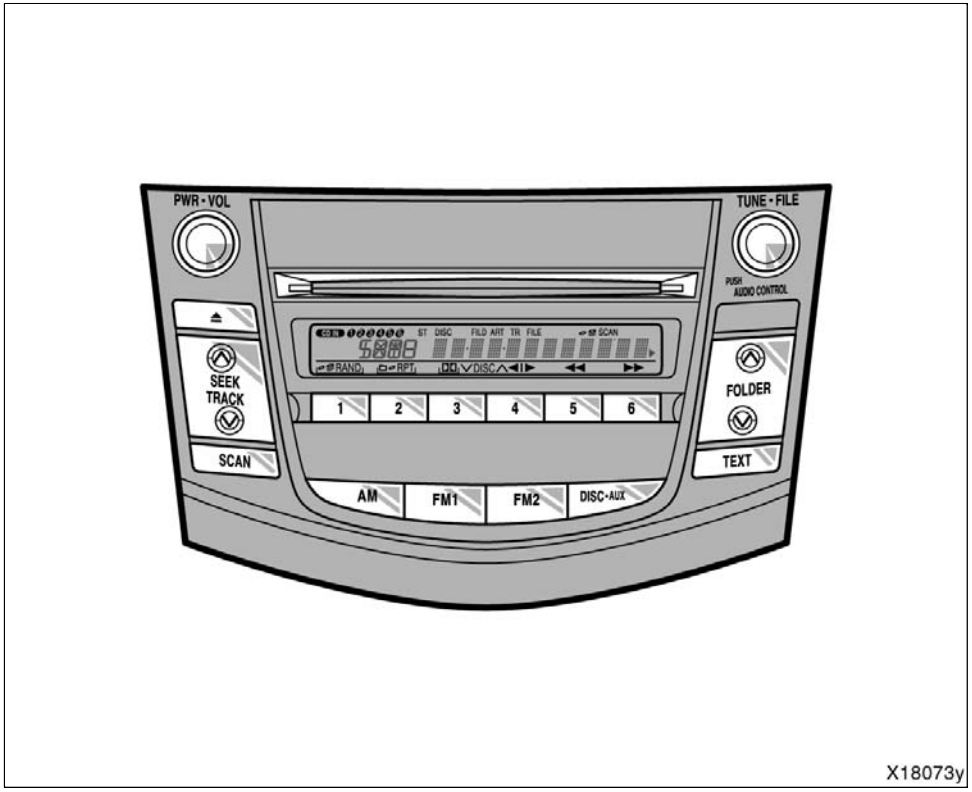

Details of specific buttons, controls and features are described in the alphabetical list that follows.

1 2 3 4 5 6 (Preset buttons)

These buttons are used to preset and tune in radio stations.

To preset a station to a button: Tune in the desired station. (See “TUNE·FILE” or “SEEK/TRACK”.) Push and hold down the button until you hear a beep—this will set the station to the button. The button number will appear on the display.

To recall a preset station: Push the button for the station you want. The button number and station frequency will appear on the display.

These systems can store one AM and two FM stations for each button. (The display will show “AM”, “FM1” or “FM2” when you push “AM”, “FM1” or “FM2” button.)

⏏ (Eject button)

Push the compact disc eject button to eject a compact disc.

◀◀/▶▶ (Reverse/Fast–forward button)

Push and hold “▶▶” (preset button 6) or “◀◀” (preset button 5) to fast forward or reverse within a compact disc. When you release the button, the compact disc player will resume playing.

AM

Push the “AM” button to turn on the radio and select the AM band. “AM” will appear on the display.

AUDIO CONTROL (Tone and sound balance adjustment function)

Each time you push the “AUDIO CONTROL” knob, the mode changes. To adjust the tone and balance, turn the knob.

BAS: Adjusts low–pitched tones. The display ranges from –5 to 5.

TRE: Adjusts high–pitched tones. The display ranges from –5 to 5.

FAD: Adjusts the sound balance between the front and rear speakers. The display ranges from F7 to R7.

BAL: Adjusts the sound balance between the right and left speakers. The display ranges from L7 to R7.

ASL: The Automatic Sound Levelizer can be turned on by turning the knob. In addition, turning the knob allows you to select from LOW, MID, and HIGH volume and tone settings. The ASL system automatically adjusts volume and tone in accordance with the driving speed. This helps ensure an optimal listening experience even if noise levels rise while driving.

DISC·AUX (Compact disc)

Push the “DISC·AUX” button to play a compact disc.

When the audio system is set into compact disc operation, the display shows the track, or track and disc number currently being played.

To switch between CD and AUX (external device) modes, press the “DISC·AUX” button. The AUX mode is only available when AUX adapter is connected to the system. When the AUX adapter is in use, “AUX” will appear on the display.

Error messages

If the player malfunctions, your audio system will display following error messages.

“WAIT”: The compact disc player unit may be too hot. Allow the player to cool down.

“ERROR 1”: The disc may be dirty, damaged or inserted incorrectly (up–side down). Clean the disc and re–insert it.

“NO DISC”: The compact disc changer of separate unit is empty. Insert a disc.

“ERROR 3”: There is a problem inside the system. Eject the disc or magazine. Set the disc or magazine again.

“ERROR 4”: Over–current. Ask your Toyota dealer to inspect.

“CD OPEN”: The compact disc changer lid of separate unit is open. Close the compact disc changer lid.

If “NO MUSIC” appears on the display, it indicates that a disc with no MP3/WMA data has been inserted. Remove the disc from the player and insert an MP3/WMA data disc.

If the malfunction still exists, take your vehicle to your Toyota dealer.

∨ DISC ∧

With compact disc changer only—

Use these buttons to select the disc you want to listen to.

Push “∨” (preset button 3) or “∧” (preset button 4) until the number of the disc you want to listen appears on the display.

Dolby® DD B NR*

If you are listening to a tape that was recorded with Dolby® B Noise Reduction, push “DD” (preset button 3). “DD” will appear on the display. Push the button again to turn off Dolby® B NR.

The Dolby NR mode reduces tape noise by about 10 dB. For best sound reproduction, play your tapes with this button on or off according to the mode used to record the tape.

*: Dolby digital

Manufactured under license from Dolby Laboratories. “Dolby”, “Pro Logic”, and the double–D symbol DD are trademarks of Dolby Laboratories. Confidential unpublished works.

(c) 1992–1997 Dolby Laboratories. All rights reserved.
This product incorporates copyright protection technology that is protected by method claims of certain U.S. patents and other intellectual property rights owned by Macrovision Corporation, and is intended for home and other limited viewing uses only unless otherwise authorized by Macrovision Corporation.
Reverse engineering or disassembly is prohibited.

FM1 FM2

Push the “FM1” or “FM2” button to turn on the radio and select the FM band. “FM1” or “FM2” will appear on the display. This system allows you to set twelve FM stations, two for each of the preset button.

FOLDER (Folder up/down)

To skip up or down to a different folder: Push either side of the “FOLDER” several times until the number of the folder you want to listen to appears on the display.

To jump to the first file in the first folder: Push and hold the “∨” side of the button until you hear a beep.

When playing a disc featuring both audio data (CD–DA) and MP3/WMA files, audio data (CD–DA) is played.

PWR·VOL (Power and Volume)

Push “PWR·VOL” to turn the audio system on and off. Turn “PWR·VOL” to adjust the volume.

RAND (Random)

Compact disc player

There are two random features—you can either listen to the tracks on one compact disc in random order, or listen to the tracks on all the compact discs in the magazine in random order.

To play the tracks on one disc in random order:
Quickly push and release “RAND” (preset button 1). “RAND” will appear on the display and the player will perform the tracks on the disc you are listening to in random order. To turn off the random feature, push this button again.

With compact disc changer only—

To play all the tracks in the magazine in random order:
Push and hold “RAND” (preset button 1) until you hear a beep. “RAND” will appear on the display and the player will perform all the tracks on all the discs in the magazine in random order. To turn off the random feature, push this button again.

MP3/WMA player

There are two random playback features—you can either listen to all of the files on the compact discs in random order. You can also listen to the files in a single folder in random order.

To randomly play the files in a folder:
Quickly push and release “RAND” (preset button 1). “RAND” will appear on the display.

To randomly play all of the files on the compact disc:
Push and hold “RAND” (preset button 1) until you hear a beep. “RAND” will appear on the display and the player will play all of the files on the disc in random order. To turn off the random playback feature, push this button again.

RPT (Repeat)

Compact disc player

There are two repeat features—you can either replay a disc track or a whole compact disc.

Repeating a track:
Quickly push and release “RPT” (preset button 2) while the track is playing. “RPT” will appear on the display. When the track ends, it will automatically replay. To turn off the repeat feature, push this button again.

With compact disc changer only—

Repeating a disc:
Push and hold “RPT” (preset button 2) until you hear a beep. “RPT” will appear on the display. The player will repeat all the tracks on the disc you are listening to. When the disc ends, the player will automatically go back to the first track on the disc and replay. To turn off the repeat feature, push this button again.

MP3/WMA player

There are two repeat features—you can repeat a signal file or an entire folder.

Repeating a file:
Quickly push and release “RPT” (preset button 2) while the file is playing. “RPT” will appear on the display. When the file ends, it will repeat automatically. This process will be continued until you push the button again to turn off the repeat feature.

Repeating a folder:
Push and hold “RPT” (preset button 2) until you hear a beep. “🗀 RPT” will appear on the display. The player will repeat all of the files in the folder. When the last file in the folder ends, the folder will repeat from the beginning. To turn off the repeat feature, push this button again.

SCAN

Radio

You can either scan all the frequencies on a band or scan only the preset stations for that band.

To scan the preset stations:
Push and hold “SCAN” until you hear a beep. The radio will tune in the next preset station up or down the band, stay there for 5 seconds, and then move to the next preset station. To stop scanning, push this button again.

To scan all the frequencies:
Quickly push and release “SCAN”. The radio will find the next station up or down the station band, stay there for 5 seconds, and then scan again to the next station. To stop scanning, push this button again.

Compact disc player

There are two scan features—you can either scan the tracks on a specific disc or scan the first tracks of all the discs in the magazine.

Scanning the tracks on a disc:
Quickly push and release “SCAN”. “SCAN” will appear on the display and the player will scan up or down all the tracks on the disc you are listening to. To stop scanning, push this button again. If the player scanned all the tracks on the disc, it will stop scanning.

The discs in the compact disc changer can be scanned up only.

With compact disc changer only—

Scanning the first tracks of all the discs in the magazine:
Push “SCAN” until you hear a beep. “SCAN” will appear on the display and the player will scan up or down the first track of the next disc. To stop scanning, push this button again. If the auto changer has scanned all the discs, it will stop scanning.

MP3/WMA player

There are two scan features—you can either scan the files in a folder on a specific disc or scan the first file of all the folder.

Scanning the files on a folder:
Quickly push and release “SCAN”. “SCAN” will appear on the display and the player will scan all the files in the folder you are listening to. To select a file, push the “SCAN” again. After all the tracks on the disc have been scanned in one pass, normal play resumes.

Scanning the first file of all the folders:
Push “SCAN” until you hear a beep. “SCAN” will appear on the display and the player will scan the first file of the next folder. To select a folder, push the “SCAN” again. After all the folders have been scanned in one pass, normal play resumes.

SEEK/TRACK (Seeking/Track up/down)

Radio

In the seek mode, the radio finds and plays the next station up or down the station band.

To seek the next station, quickly push and release “∧” or “∨” side of the “SEEK/TRACK” button. Do this again to find the station after that.

Compact disc player

Use this button to skip up or down to a different track.

Push “∧” or “∨” side of the “SEEK/TRACK” button until the number of the track you want to listen to appears on the display. If you want to return to the beginning of the current track, quickly push the down side of the button one time.

MP3/WMA player

To file up or down to a different file:
Push either side of the “SEEK/TRACK” several times until the file you want to listen to appears on the display. If you want to return to the beginning of the current file, push the “∨” side of the button one time, quickly.

To fast forward or reverse the disc:
If you want to fast forward or reverse the disc, push and hold it until you hear a beep. When you release the button, the player will resume playing.

ST (Stereo reception) display

Your radio automatically changes to stereo reception when a stereo broadcast is received. “ST” appears on the display. If the signal becomes weak, the radio reduces the amount of channel separation to prevent the weak signal from creating noise. If the signal becomes extremely weak, the radio switches from stereo to mono reception.

TEXT

Compact disc player

This button is used to change the display for the compact disc that contains text data.

To change the display, quickly push and release the “TEXT” button while the compact disc is playing. The display changes in the order from the elapsed time to disc title to track title, then back to the elapsed time.

If this button is pushed while a compact disc that does not contain text data is playing, “NO TITLE” will appear on the display.

If the entire disc or track title does not appear on the display, push and hold the button until you hear a beep. The rest of the title will appear.

MP3/WMA player

This button is used to change the display for the MP3/WMA file that contains text data.

To change the display, quickly push and release the “TEXT” button while the MP3/WMA file is playing. The display changes in the order from the elapsed time to folder name to file name to album title to track title to artist name, then back to the elapsed time.

If this button is pushed while an MP3/WMA file that does not contain text data is playing, “NO TITLE” will appear on the display.

If the entire text data is not displayed, push and hold it until you hear a beep. The rest of the text data will appear.

TUNE·FILE (Tuning and File up/down)

Radio

Turn the “TUNE·FILE” knob clockwise to step up the frequency. Turn the knob counterclockwise to step down the frequency.

MP3/WMA player

Turn the knob clockwise to file up. Turn the knob counterclockwise to file down.

▶Type 2–1

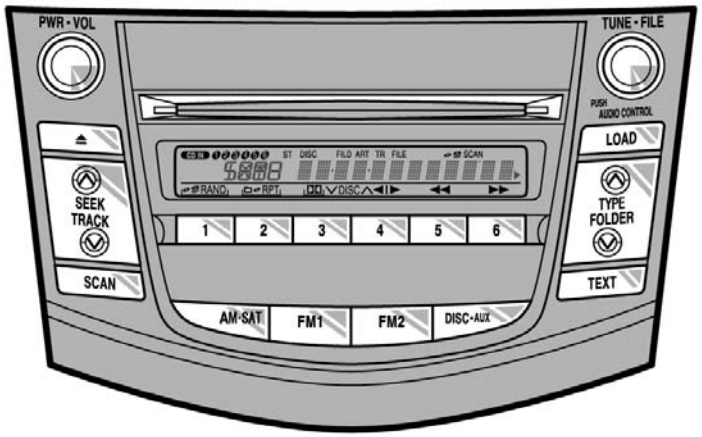

X18109y

Details of specific buttons, controls and features are described in the alphabetical list that follows.

▶Type 2–2

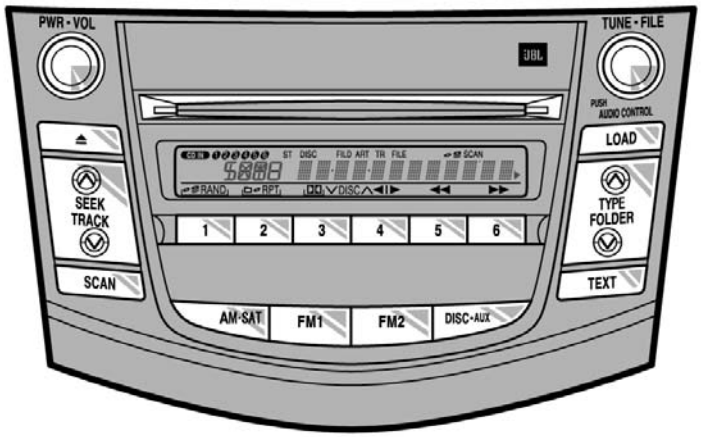

X18110y

Details of specific buttons, controls and features are described in the alphabetical list that follows.

1 2 3 4 5 6 (Preset buttons)

These buttons are used to preset and tune in radio stations.

To preset a station to a button: Tune in the desired station. (See “TUNE·FILE” or “SEEK/TRACK”.) Push and hold down the button until you hear a beep—this will set the station to the button. The preset button number will appear on the display.

To recall a preset station: Push the button for the station you want. The preset button number and station frequency will appear on the display.

This radio can store one AM and two FM stations for each button. (The display will show “AM”, “FM1” or “FM2” when you push “AM”, “FM1” or “FM2” button.)

⏏ (Eject button)

This button is used to eject one or all compact discs.

To eject the current compact disc, push and release the compact disc eject button.

To eject a specific disc, push “∨” (preset button 3) or “∧” (preset button 4) until the number of the disc you want to eject is displayed. Push and release the eject button.

To eject all discs at a time, press and hold the eject button until you hear a beep. The last compact disc played before pushing the button will be ejected first. If the ejected disc is not removed for a long time, the eject function will be cancelled.

◀◀/▶▶ (Reverse/Fast–forward button)

Push and hold “▶▶” (preset button 6) or “◀◀” (preset button 5) to fast forward or reverse within a compact disc. When you release the button, the compact disc player will resume playing.

AM·SAT (AM band and XM® Satellite Radio*)

Push the “AM·SAT” button to turn on the radio and select the AM or XM® band. “AM”, “SAT1”, “SAT2” or “SAT3” will appear on the display.

Error messages

If the satellite radio tuner malfunctions, your audio system will display following error messages.

“ANTENNA”:

- The XM® antenna is not connected. Check whether the XM® antenna cable is attached securely.
- A short–circuit occurs in the antenna or the surrounding antenna cable. See a Toyota certified dealer.

“UPDATING”:

- You have not subscribed to the XM® Satellite Radio. The radio is being updated with the latest encryption code. Contact the XM® Satellite Radio for subscription information. When a contact is canceled, you can choose the “CH000” and all free–to–air channels.
- The premium channel you selected is not authorized. Wait for about 2 seconds until the radio returns to the previous channel or “CH001”. If it does not change automatically, select another channel. If you want to listen to the premium channel, contact the XM® Satellite Radio.

“NO SIGNAL”: The XM® signal is too weak at the current location. Wait until your vehicle reaches a location with a stronger signal.

“LOADING”: The unit is acquiring audio or program information. Wait until the unit has received the information.

“OFF AIR”: The channel you selected is not broadcasting any programming. Select another channel.

“– – –”: The channel you selected is no longer available. Wait for about 2 seconds until the radio returns to the previous channel or “CH001”. If it does not change automatically, select another channel.

The XM® Listener Care Center is also available on the phone, please call 1–800–967–2346 (U.S.A.) or 1–877–438–9677 (Canada).

*: Use of satellite radio requires XM® tuner and service. Contact your Toyota dealer for details.

AUDIO CONTROL (Tone and sound balance adjustment function)

Each time you push the “AUDIO CONTROL” knob, the mode changes. To adjust the tone and balance, turn the knob.

Type 2–1—

BAS: Adjusts low–pitched tones. The display ranges from –5 to 5.

TRE: Adjusts high–pitched tones. The display ranges from –5 to 5.

FAD: Adjusts the sound balance between the front and rear speakers. The display ranges from F7 to R7.

BAL: Adjusts the sound balance between the right and left speakers. The display ranges from L7 to R7.

ASL: The Automatic Sound Levelizer can be turned on by turning the knob. In addition, turning the knob allows you to select from LOW, MID, and HIGH volume and tone settings. The ASL system automatically adjusts volume and tone in accordance with the driving speed. This helps ensure an optimal listening experience even if noise levels rise while driving.

Type 2–2—

BAS: Adjusts low–pitched tones. The display ranges from –5 to 5.

MID: Adjusts mid–pitched tones. The display ranges from –5 to 5.

TRE: Adjusts high–pitched tones. The display ranges from –5 to 5.

FAD: Adjusts the sound balance between the front and rear speakers. The display ranges from F7 to R7.

BAL: Adjusts the sound balance between the right and left speakers. The display ranges from L7 to R7.

ASL: The Automatic Sound Levelizer can be turned on by turning the knob. The ASL system automatically adjusts volume and tone in accordance with ambient noise levels. This helps ensure an optimal listening experience even when road, wind or other ambient noise levels rise.

RSE: Vehicles with a rear seat entertainment system—See “Rear seat entertainment system” on page 194 in this Section.

DISC·AUX (Compact disc)

Push the “DISC·AUX” button to play a compact disc.

When the audio system is set into compact disc operation, the display shows the track, or track and disc number currently being played.

Vehicles with rear seat entertainment system—

The “DISC·AUX” button may also be used to operate the DVD player when a disc is in the DVD player. Pressing the “DISC·AUX” button allows you to switch between the CD player and the DVD player. When the DVD player is in operation, “RSE DVD” appears on the display.

Vehicles with AUX adapter—

To switch between CD, DVD, and AUX (external device) modes, press the “DISC·AUX” button. The AUX mode is only available when AUX adapter is connected to the system. When the AUX adapter is in use, “AUX” will appear on the display.

Error messages

If the player malfunctions, your audio system will display following error messages.

“WAIT”: The compact disc player unit may be too hot. Allow the player to cool down.

“ERROR 1”: The disc may be dirty, damaged or inserted incorrectly (up–side down). Clean the disc and re–insert it.

“NO DISC”: The compact disc changer of separate unit is empty. Insert a disc.

“ERROR 3”: There is a problem inside the system. Eject the disc or magazine. Set the disc or magazine again.

“ERROR 4”: Over–current. Ask your Toyota dealer to inspect.

“CD OPEN”: The compact disc changer lid of separate unit is open. Close the compact disc changer lid.

If “NO MUSIC” appears on the display, it indicates that a disc with no MP3/WMA data has been inserted. Remove the disc from the player and insert an MP3/WMA data disc.

If the malfunction still exists, take your vehicle to your Toyota dealer.

∨ DISC ∧

Use these buttons to select a disc you want to listen to.

Push “∨” (preset button 3) or “∧” (preset button 4) until the number of the disc you want to listen to appears on the display.

FM1 FM2

Push the “FM1” or “FM2” button to turn on the radio and select the FM band. “FM1” or “FM2” will appear on the display. This system allows you to set twelve FM stations, two for each of the preset button.

TYPE/FOLDER (Type/Folder up/down)

Radio

XM® Satellite Radio*—

When you push the “∨” or “∧” side of the “TYPE/FOLDER” button while receiving a XM® channel, the current channel category appears on the display.

When the channel category appears, push either “∨” or “∧” side of the “TYPE/FOLDER” button to switch to the next or previous category.

*: Use of satellite radio requires XM® tuner and service. Contact your Toyota dealer for details.

MP3/WMA player

To skip up or down to a different folder:
Push “∧” or “∨” side of the “TYPE/FOLDER” several times until the number of the folder you want to listen to appears on the display.

To jump to the first file in the first folder: Push and hold the “∨” side of the button until you hear a beep.

When playing a disc featuring both audio data (CD–DA) and MP3/WMA files, audio data (CD–DA) is played.

LOAD

This button is used to load the compact discs in the compact disc player. This player can store up to six discs.

To load one compact disc only, quickly push and release the button, then insert a compact disc. After the disc is loaded, the shutter of the slot will close.

If no compact disc is inserted, the shutter will close after 15 seconds.

To load multiple compact discs, push and hold the button (until you hear a beep when the audio system is on). When the indicators on both sides of the slot turn green, insert the first compact disc. After the disc is loaded, the shutter of the slot will close. After a few seconds, the shutter will automatically open again and the indicators will turn green so the next disc can be inserted. The same process can be applied for loading the rest of the discs. If the player is full of discs, “DISC FULL” will appear on the display.

If no compact disc is inserted, the shutter will close after 15 seconds.

PWR·VOL (Power and Volume)

Push “PWR·VOL” to turn the audio system on and off. Turn “PWR·VOL” to adjust the volume.

RAND (Random)

Compact disc player

There are two random features—you can either listen to the tracks on one compact disc in random order, or listen to the tracks on all the compact discs in the magazine in random order.

To play the tracks on one disc in random order:
Quickly push and release “RAND” (preset button 1). “RAND” will appear on the display and the player will perform the tracks on the disc you are listening to in random order. To turn off the random feature, push this button again.

To play all the tracks in the magazine in random order:
Push and hold “RAND” (preset button 1) until you hear a beep. “RAND” will appear on the display and the player will perform all the tracks on all the discs in the magazine in random order. To turn off the random feature, push this button again.

MP3/WMA player

There are two random playback features—you can either listen to all of the files on the compact discs in random order. You can also listen to the files in a single folder in random order.

To randomly play the files in a folder:
Quickly push and release “RAND” (preset button 1). “RAND” will appear on the display.

To randomly play all of the files on the compact disc:
Push and hold “RAND” (preset button 1) until you hear a beep. “RAND” will appear on the display and the player will play all of the files on the disc in random order. To turn off the random playback feature, push this button again.

RPT (Repeat)

Compact disc player

There are two repeat features—you can either replay a disc track or a whole compact disc.

Repeating a track:
Quickly push and release “RPT” (preset button 2) while the track is playing. “RPT” will appear on the display. When the track ends, it will automatically replay. To turn off the repeat feature, push this button again.

Repeating a disc:
Push and hold “RPT” (preset button 2) until you hear a beep. “RPT” will appear on the display. The player will repeat all the tracks on the disc you are listening to. When the disc ends, the player will automatically go back to the first track on the disc and replay. To turn off the repeat feature, push this button again.

MP3/WMA player

There are two repeat features—you can repeat a signal file or an entire folder.

Repeating a file:
Quickly push and release “RPT” (preset button 2) while the file is playing. “RPT” will appear on the display. When the file ends, it will repeat automatically. This process will be continued until you push the button again to turn off the repeat feature.

Repeating a folder:
Push and hold “RPT” (preset button 2) until you hear a beep. “RPT” will appear on the display. The player will repeat all of the files in the folder. When the last file in the folder ends, the folder will repeat from the beginning. To turn off the repeat feature, push this button again.

SCAN

Radio

You can either scan all the frequencies on a band or scan only the preset stations for that band.

To scan the preset stations:
Push and hold “SCAN” until you hear a beep. The radio will tune in the next preset station up or down the band, stay there for 5 seconds, and then move to the next preset station. To stop scanning, push this button again.

To scan all the frequencies:
Quickly push and release “SCAN”. The radio will find the next station up or down the station band, stay there for 5 seconds, and then scan again to the next station. To stop scanning, push this button again.

Compact disc player

There are two scan features—you can either scan the tracks on a specific disc or scan the first tracks of all the discs in the magazine.

Scanning the tracks on a disc:
Quickly push and release “SCAN”. “SCAN” will appear on the display and the player will scan up or down all the tracks on the disc you are listening to. To stop scanning, push this button again. If the player scanned all the tracks on the disc, it will stop scanning.

The discs in the compact disc changer of separate unit can be scanned up only.

Scanning the first tracks of all the discs in the magazine:
Push “SCAN” until you hear a beep. “SCAN” will appear on the display and the player will scan up or down the first track of the next disc. To stop scanning, push this button again. If the auto changer has scanned all the discs, it will stop scanning.

The discs in the compact disc changer of separate unit can be scanned up only.

MP3/WMA player

There are two scan features—you can either scan the files in a folder on a specific disc or scan the first file of all the folder.

Scanning the files on a folder:
Quickly push and release “SCAN”. “SCAN” will appear on the display and the player will scan all the files in the folder you are listening to. To select a file, push the “SCAN” again. After all the tracks on the disc have been scanned in one pass, normal play resumes.

Scanning the first file of all the folders:
Push “SCAN” until you hear a beep. “SCAN” will appear on the display and the player will scan the first file of the next folder. To select a folder, push the “SCAN” again. After all the folders have been scanned in one pass, normal play resumes.

SEEK/TRACK (Seeking/Track up/down)

Radio

In the seek mode, the radio finds and plays the next station up or down the station band.

To seek the next station, quickly push and release “∧” or “∨” side of the “SEEK/TRACK” button. Do this again to find the station after that.

Compact disc player

Use this button to skip up or down to a different track.

Push “∧” or “∨” side of the “SEEK/TRACK” button until the number of the track you want to listen to appears on the display. If you want to return to the beginning of the current track, quickly push the down side of the button one time.

Vehicles with rear seat entertainment system—

While the rear DVD player is in operation, the chapter or track can be changed by pushing the “∧” or “∨” side of the “SEEK·TRACK” button.

MP3/WMA player

To file up or down to a different file:
Push either side of the “SEEK/TRACK” several times until the file you want to listen to appears on the display. If you want to return to the beginning of the current file, push the “∨” side of the button one time.

To fast forward or reverse the disc:
If you want to fast forward or reverse the disc, push and hold it until you hear a beep. When you release the button, the player will resume playing.

Vehicles with rear seat entertainment system—

While the rear DVD player is in operation, the chapter or track can be changed by pushing the “∧” or “∨” side of the “SEEK·TRACK” button.

ST (Stereo reception) display

Your radio automatically changes to stereo reception when a stereo broadcast is received. “ST” appears on the display. If the signal becomes weak, the radio reduces the amount of channel separation to prevent the weak signal from creating noise. If the signal becomes extremely weak, the radio switches from stereo to mono reception.

TEXT

Compact disc player

This button is used to change the display for the compact disc that contains text data.

To change the display, quickly push and release the “TEXT” button while the compact disc is playing. The display changes in the order from the elapsed time to disc title to track title, then back to the elapsed time.

If this button is pushed while a compact disc that does not contain text data is playing, “NO TITLE” will appear on the display.

If the entire disc or track title does not appear on the display, push and hold the button until you hear a beep. The rest of the title will appear.

MP3/WMA player

This button is used to change the display for the MP3/WMA file that contains text data.

To change the display, quickly push and release the “TEXT” button while the MP3/WMA file is playing. The display changes in the order from the elapsed time to folder name to file name to disc title to track title to artist name, then back to the elapsed time.

If this button is pushed while an MP3/WMA file that does not contain text data is playing, “NO TITLE” will appear on the display.

If the entire text data is not displayed, push and hold it until you hear a beep. The rest of the text data will appear.

TUNE·FILE (Tuning and File up/down)

Radio

Turn the “TUNE·FILE” knob clockwise to step up the frequency. Turn the knob counterclockwise to step down the frequency.

MP3/WMA player

Turn the knob clockwise to file up. Turn the knob counterclockwise to file down.

AUX adapter

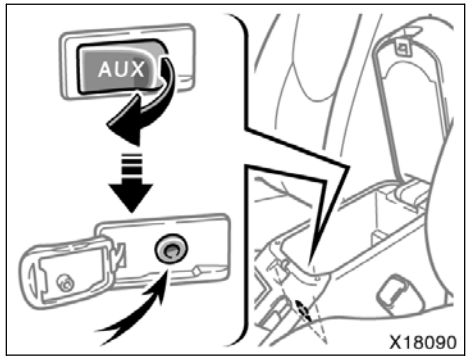

An AUX adapter is installed in the rear console box.

By inserting a mini plug into the AUX adapter, you can listen to music from a portable audio device through the vehicle’s speaker system.

To use the AUX adapter, switch to the AUX mode (external device mode) by pressing the “DISC·AUX” button. When the AUX adapter is in use, “AUX” will appear on the display. To adjust the volume, turn the “PWR·VOL” knob.

When using a portable audio device connected to the power outlet or cigarette lighter, noise may occur during playback. If this happens, use the power source of the portable audio device.

If you install an audio system other than a genuine audio system, you will not be able to use the AUX adapter.

Audio remote controls (steering switches)

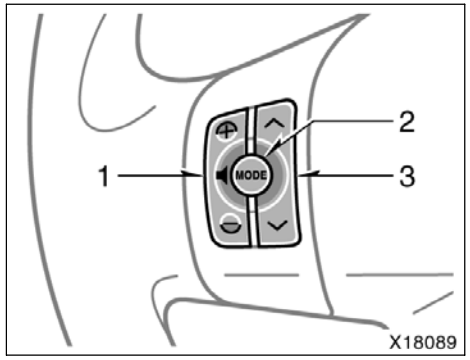

Some parts of the audio system can be adjusted using the switches on the steering wheel.

Details of the specific switches, controls, and features are described below.

1. “+ –” switch
2. “MODE” switch
3. “∧ ∨” switch

“+ –” switch

Push “+” side to increase the volume. The volume continues to increase while the switch is being pushed.

Push “–” side to decrease the volume. The volume continues to decrease while the switch is being pushed.

“MODE” switch

Push “MODE” switch to select an audio mode. Each push changes the mode sequentially if the desired mode is ready to use.

To turn the audio system on, push the “MODE” switch.

To turn the audio system off, push and hold the “MODE” switch until the system turns off.

“∧ ∨” switch

Radio

To select a preset station:
Quickly push and release the “∧” or “∨” side of the switch. Do this again to select the next preset station.

To seek a station:
Push and hold the “∧” or “∨” side of the switch until you hear a beep. Do this again to find the next station. If you push the switch on either side during the seek mode, seeking will be cancelled.

To step up or down the frequency, push and hold the switch even after you hear a beep. When you release from the switch, the radio will begin seeking up or down for a station. Do this again to find the next station.

Compact disc player

To select a desired track:
Quickly push and release the “∧” or “∨” side of the switch until the track you want to listen to is set. If you want to return to the beginning of the current track, push the “∨” side of the switch once, quickly.

Vehicles with rear seat entertainment system—

While the rear DVD player is in operation, the chapter or track can be changed by pushing the “∧” or “∨” side of the switch.

With compact disc changer only—

To select a desired disc:
Push and hold the “∨” or “∧” side of the switch until you hear a beep. Repeat this until the disc you wish to listen to is set.

MP3/WMA player

To select a desired file:
Quickly push and release the “∧” or “∨” side of the switch until the file you want to listen to is set. If you want to return to the beginning of the current file, push the “∨” side of the switch once, quickly.

To select a desired folder:
Push and hold the “∧” or “∨” side of the switch until you hear a beep. Repeat this until the folder you want to listen to is set.

Vehicles with rear seat entertainment system—

While the rear DVD player is in operation, the file can be changed by pushing the “∧” or “∨” side of the switch.

With compact disc changer only—

To select a desired disc:
Push and hold the “∧” or “∨” side of the switch until you hear a beep. Repeat this until the disc you want to listen to is set.

Rear seat entertainment system—

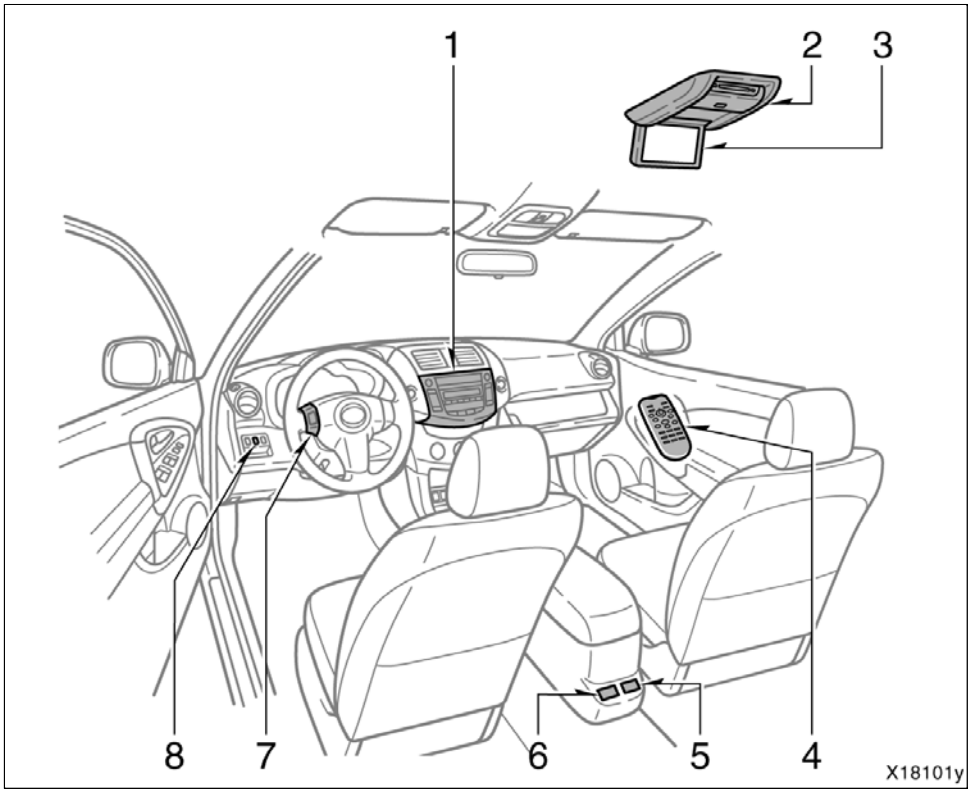

The rear seat entertainment system consists of the following components.

1. Front audio system*
2. DVD player
3. Rear seat entertainment system display
4. Rear seat entertainment system controller
5. A/V input adapter
6. Power outlet (115 VAC)
7. Audio remote control switches*
8. Power outlet main switch

*: For details, see “—Controls and features” on page 176 or “Audio remote controls” on page 191 in this section.

The rear seat entertainment system is designed for the rear passengers to enjoy audio and DVD video separately from the front audio system.

The rear seat entertainment system can be operated when the engine switch is in the “ACC” or “ON” position.

The rear passengers can enjoy DVD video, audio CD, video CD, CD text, dts–CD and MP3.

The rear seat entertainment system can play DVD video, audio CD, video CD, CD text, dts–CD or MP3 only when a disc is loaded in the DVD player.

You can enjoy videos and sound when your personal audio system is connected to the A/V input adapter. For details, refer to the manufacturer’s instructions.

You can enjoy the rear seat entertainment system with a wireless headphone. The wireless headphone can be used within rear seat. If the signal becomes weak, the headphone will mute. For details, refer to the manufacturer’s instructions.

With some wireless headphone generally available in the market, it may be difficult to catch sound properly. Toyota recommends the use of Toyota genuine wireless headphone.

You can purchase a wireless headphone at a Toyota dealer.

⚠ CAUTION

- **Do not operate a motor vehicle while using headphones. Doing so may cause an accident, resulting in death or serious injury.**
- **With DVD player:**

  Conversational speech on some DVDs is recorded at a low volume to emphasize the impact of sound effects. If you adjust the volume assuming that the conversations represent the maximum volume level that the DVD will play, you may be startled by louder sound effects or when you change to a different audio source. Be sure to adjust the volume with this in mind.

  Make sure the volume is not increased, before you turn on the headphone.

—Display

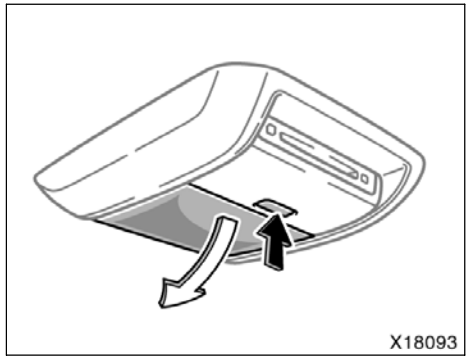

To open the display, push the lock release button.

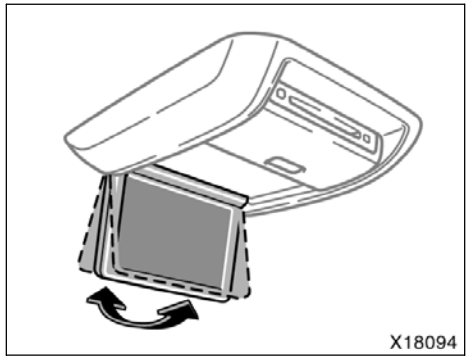

Pull the display down to an easily viewable angle (between 90° and 125°)

NOTICE

The screen should be cleaned with a dry soft cloth. If the screen is pushed by hand or wiped with a hard cloth, the surface of the screen may be scratched.

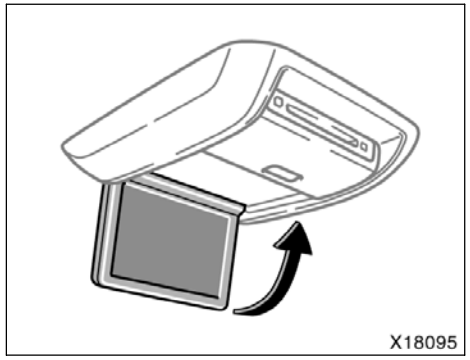

To close, push the display up until you hear a click.

The illumination of the screen is automatically turned off when the display is closed. However, the rear seat entertainment system is not turned off.

⚠ CAUTION

To reduce the chance of injury in case of an accident or sudden stop while driving, close the display when it is not in use.

NOTICE

- ***Benzene or alkaline solutions may damage the coated surface of the screen.***
- ***To prevent the battery from being discharged, do not turn on the rear seat entertainment system longer than necessary when the engine is not running.***

—Rear seat entertainment system controller

The rear seat entertainment system can be operated with the rear seat entertainment system controller and buttons on the DVD player unit. The system cannot be operated by touching the switches on the screen directly.

⚠ CAUTION

Do not disassemble or modify the controller. It may cause an accident, fire or electric shock.

NOTICE

Keep the controller away from direct sunlight, high heat and high humidity. These conditions could cause the case to deform or the battery to explode or leak.

BEFORE USING THE CONTROLLER (for new vehicle owners)

A battery is already set in the controller with an insulating sheet, which prevents the battery from being discharged. Before using the controller, remove the insulating sheet according to the following procedure.

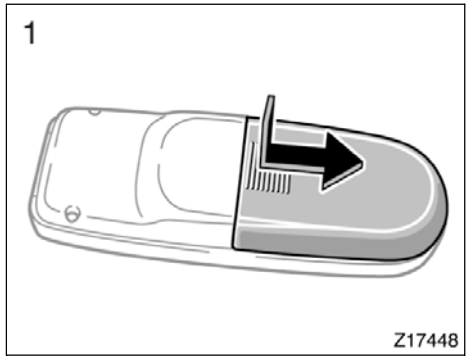

1. Remove the cover of the controller as shown.

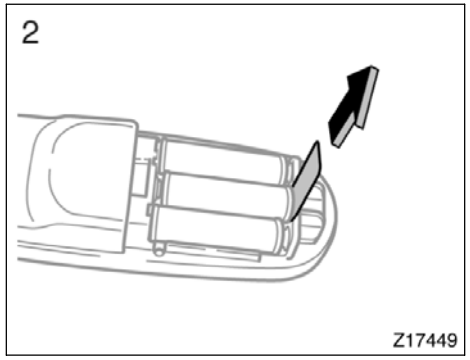

2. Remove the insulating sheet.

USING THE CONTROLLER

To use the rear seat entertainment system controller, direct the signal output portion of the controller to the signal reception portion of the rear seat entertainment system display.

The controller does not operate properly when the signal reception portion of the display is exposed to direct sunlight. Block the display from direct sunlight.

⚠ CAUTION

To reduce the chance of injury in case of an accident or a sudden stop while driving, stow the controller in the console box or front seat side table when it is not in use.

NOTICE

Observe the followings, otherwise the controller may be damaged.

- ***Do not drop or strongly knock the controller against hard objects.***
- ***Do not sit on or place heavy objects on the controller.***
- ***Do not leave the controller exposed to high temperatures (such as on the instrument panel) for a long time.***

—Control buttons

▶Controller

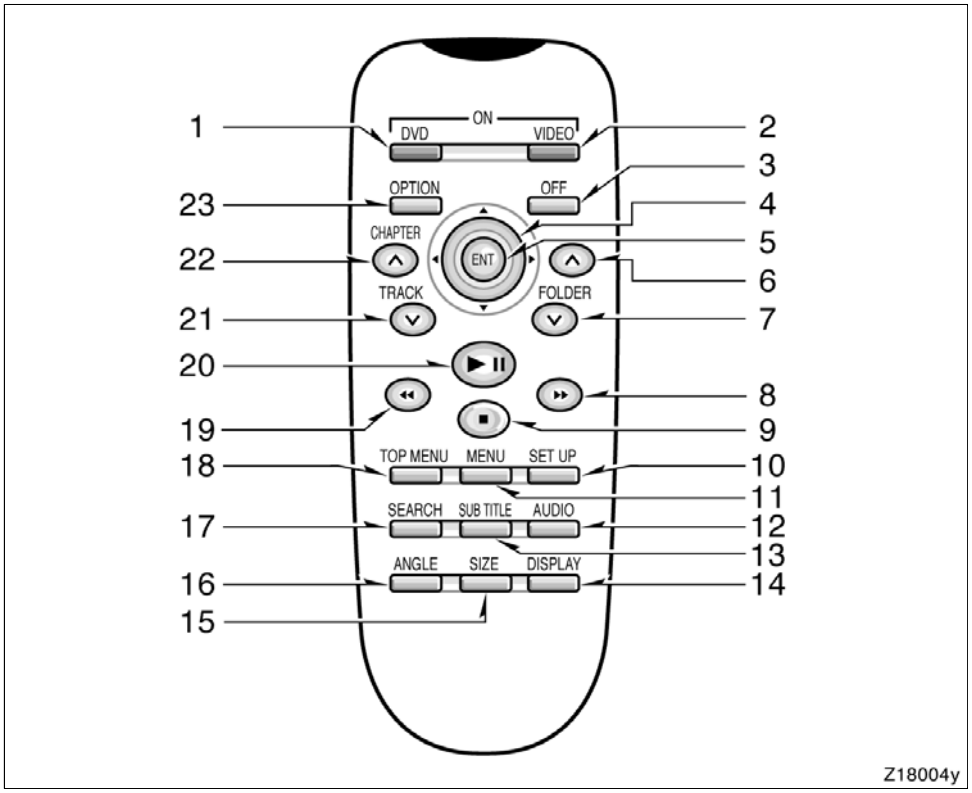

1. “DVD” button

   This button turns on the DVD mode.

2. “VIDEO” button

   This button causes the display to use the video signal from an external video device.

3. “OFF” button

   This button turns off the rear seat entertainment system.

4. Joystick

   This joystick selects a control switch, mode switch on the screen or the menu for the disc.

5. “ENT” button

   This button inputs the selected switch or the selected menu for the disc.

6. “FOLDER ∧” button

   This button selects a desired folder.

7. “FOLDER ∨” button

   This button selects a desired folder.

8. “▶▶” button

   This button fast forwards a screen when the DVD player is operated.

9. “■” button

   This button stops a screen when the DVD player is operated.

10. “SET UP” button

    This button indicates the initial set up screen when the DVD player is operated.

11. “MENU” button

    This button indicates the menu screen for DVD video when the DVD player is operated.

12. “AUDIO” button

    This button indicates the changing audio screen when the DVD player is operated.

13. “SUB TITLE” button

    This button indicates the changing subtitle screen when the DVD player is operated.

14. “DISPLAY” button

    This button adjusts the color, tone, contrast and brightness of the screen.

15. “SIZE” button

    This button changes the display mode when the DVD player is operated.

16. “ANGLE” button

    This button selects the angle of the screen when the DVD player is operated.

17. “SEARCH” button

    This button indicates the title search screen when the DVD player is operated.

18. “TOP MENU” button

    This button indicates the title selection screen for DVD video when the DVD player is operated.

19. “◀◀” button

    This button reverse a screen when the DVD player is operated.

20. “▶❚❚” button

    This button plays or pauses a screen when the DVD player is operated.

21. “TRACK/CHAPTER ∨” button

    This button selects track/chapter.

22. “TRACK/CHAPTER ∧” button

    This button selects track/chapter.

23. “OPTION” button

    This button indicates the control switches on the screen when the DVD player is operated.

REPLACING CONTROLLER BATTERY

For replacement, use 3 AA batteries.

⚠ CAUTION

Special care should be taken to prevent small children from swallowing the removed battery or components.

NOTICE

- ***When replacing the battery, be careful not to lose the components.***
- ***Replace only with the same or equivalent type recommended by a Toyota dealer.***
- ***Dispose of used batteries according to the local laws.***

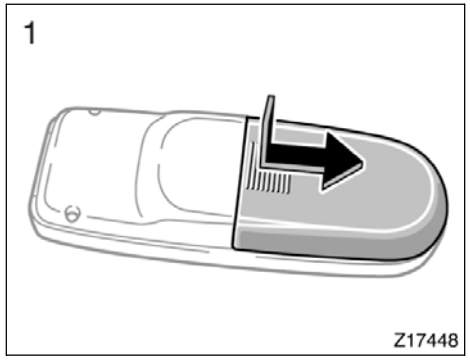

Replace the battery according to the following procedure:

1. Remove the cover of the controller as shown.

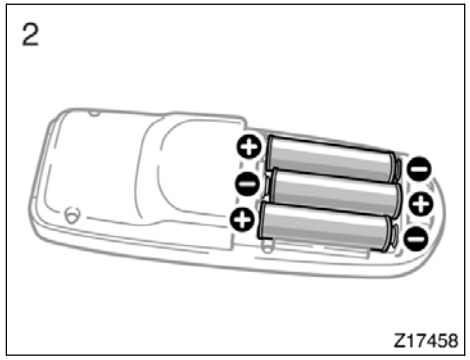

2. Remove the discharged batteries and put in the new batteries as shown. Install the cover.

NOTICE

- ***Be sure that the positive side and negative side of the controller battery should be faced correctly.***
- ***Do not replace the battery with wet hands. Water may cause rust.***
- ***Do not touch or move any components inside of the controller, or it may interfere with proper operation.***
- ***Be careful not to bend the electrode of the controller battery insertion.***
- ***Close the battery case securely.***

After replacing the battery, check that the controller operates properly. If the controller still does not operate properly, contact your Toyota dealer.

—Turning the rear seat entertainment system on and off

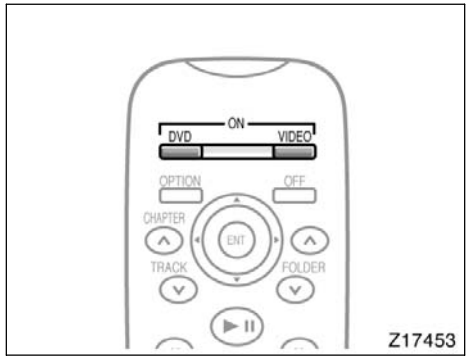

To turn on the system, push the “DVD” button or “VIDEO” button.

When the “DVD” button is pushed, the disc load screen changes to the DVD player operation screen.

When the “VIDEO” button is pushed, the images and sounds from the personal audio machine are output.

The “DVD” button is effective only when a disc is inserted.

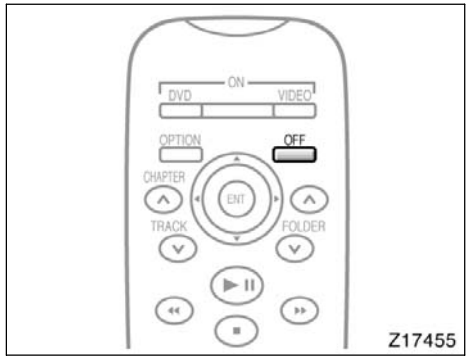

To turn off the system, push the “OFF” button.

When the front audio system is turned off, the rear audio system and the DVD player will be turned off simultaneously.

—Operating the rear DVD player using the front audio system

While the rear DVD player is in operation, the chapter or track can be changed by pushing the “∧” or “∨” side of the “SEEK/TRACK” button.

For details, see “—Controls and features” on page 176 in this Section.

—Rear system lock

The audio system controls in the instrument panel can be used to disable the operation of the rear seat entertainment system by rear seat passengers.

Turning on the rear system lock prevents small children from using the remote controller or operation panel of the DVD player unit to operate the rear seat entertainment system during driving.

Turn the audio system on. Push the “AUDIO CONTROL” knob repeatedly until “RSE” is displayed. Next, turn the “AUDIO CONTROL” knob until “ON” is displayed, and then push the “AUDIO CONTROL” knob.

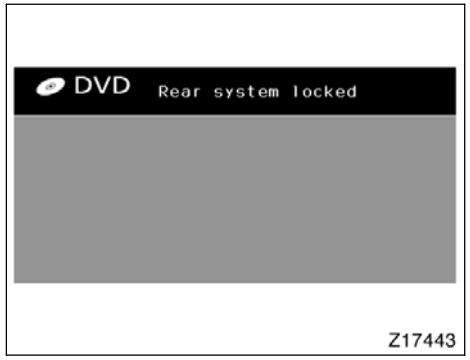

When the rear system lock is on and any button is pushed on the remote controller or the operation panel, the screen shown above is displayed for approximately 6 seconds.

Even when the rear system lock is turned on during play mode, the images and sounds continue without interruption.

The condition of the rear system lock is maintained, even when the engine switch is turned off.

—DVD player

The DVD player can play audio CDs/ MP3 CDs, DVD video discs, CD texts, dts–CDs and video CDs.

For appropriate discs for this player, see “Audio/video system operating hints” on page 232 in this Section.

The DVD player works when the engine switch is in the “ACC” or “ON” position.

To turn on the DVD player, a disc must be loaded in the player.

To turn off the player, eject the disc.

Error messages

If the player malfunctions, your audio system will display following error messages.

If “DISC CHECK” appears on the screen: It indicates that the disc is dirty, damaged or it was inserted upside down. Clean the disc or insert it correctly.

If “REGION CODE ERROR” appears on the screen: It indicates that the DVD region code is not set properly.

If “DVD ERROR” appears on the screen: There is a problem inside the player. Eject the disc. Set the disc again.

If the malfunction still exists, take your vehicle to your Toyota dealer.

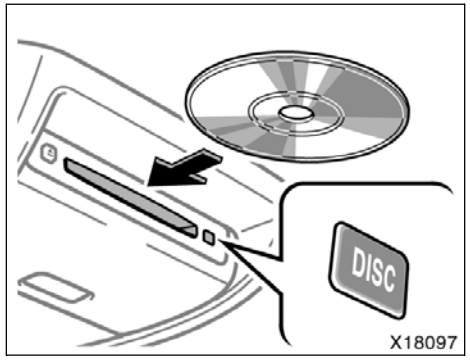

INSERTING THE DISC

Insert a disc into the slot with the label side up.

“DISC” indicator light turns on while the disc is loaded.

If the label faces down, the disc cannot be played. In this case, “DISC CHECK” and disc number appear on the screen.

If a disc which is not playable is inserted, “DISC CHECK” will also appear on the screen. For appropriate discs for this player, see “Audio/video system operating hints” on page 232 in this Section.

The player will play the track or chapter, and it will play from the beginning of the track or chapter again after it reaches the end.

NOTICE
Never try to disassemble or oil any part of the DVD player. Do not insert anything other than a disc into the slot.

8 cm (3 in.) compact disc singles

Your compact disc player needs an adaptor to play compact disc singles. Compact disc singles are about 8 cm (3 in.) in diameter–smaller than standard discs.

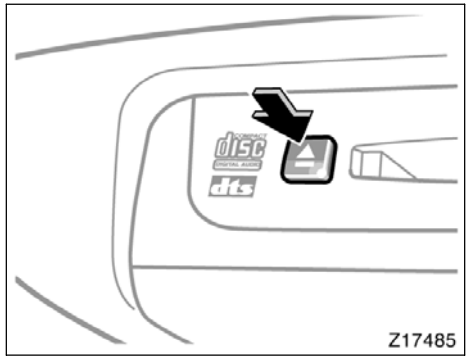

EJECTING THE DISC

Push the “⏏” button.

—DVD player operation switches

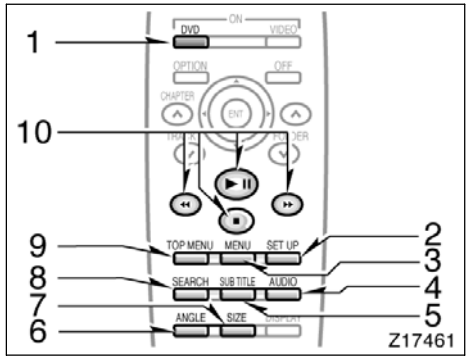

The DVD player can be operated with the controller buttons directly.

1. “DVD” button
2. “SET UP” button
3. “MENU” button
4. “AUDIO” button
5. “SUB TITLE” button
6. “ANGLE” button
7. “SIZE” button
8. “SEARCH” button
9. “TOP MENU” button
10. “▶❚❚”, “■”, “◀◀” and “▶▶” buttons

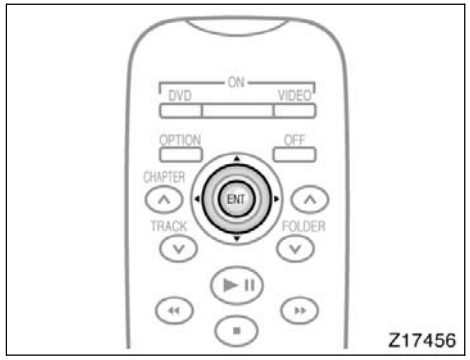

The player can also be operated with the switches on the screen.

To operate the switches on the screen, select the switch by the joystick and push the “ENT” button. You cannot select the switches on the screen by touching them directly.

When the switch is selected by the joystick, the outline of the switch changes to blue. Push the “ENT” button, and the switch will be highlighted in green.

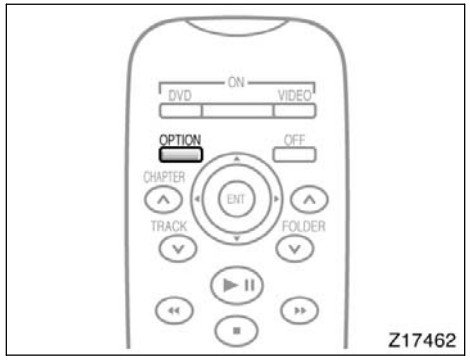

TURNING THE OPERATION SWITCHES ON AND OFF

To turn on the operation switches, push the “OPTION” button on the controller.

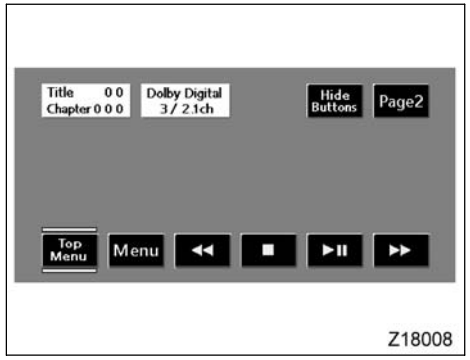

Top page (DVD video operation switch)

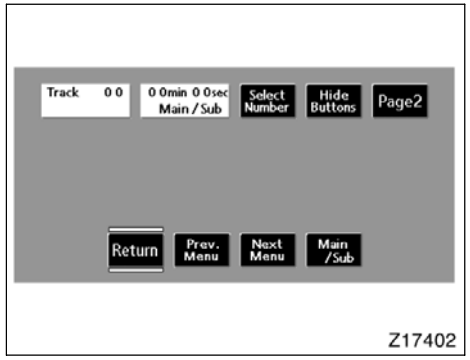

Top page (video CD)

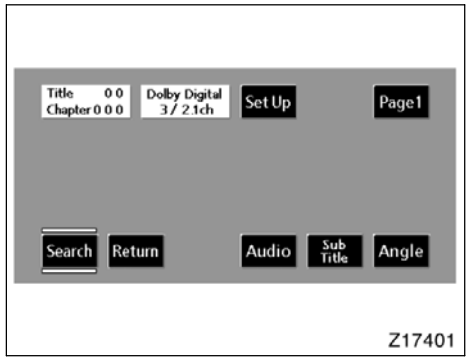

Second page (DVD video operation switch)

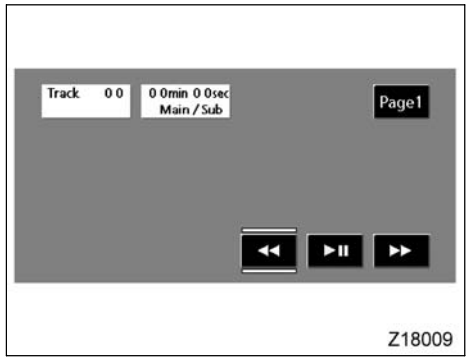

Second page (video CD)

There are operation switches on the “Page 1” and “Page 2” screens.

To change the screen, push the “Page 1” or “Page 2” switch on the screen.

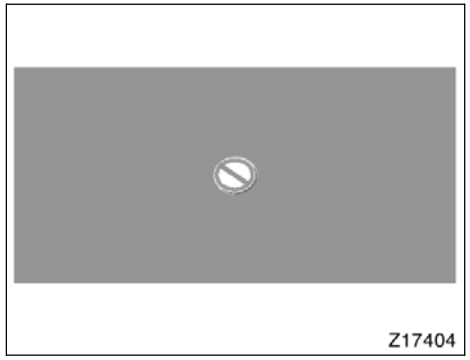

If “⊘” appears on the screen when you select a switch, it indicates that the switch cannot work.

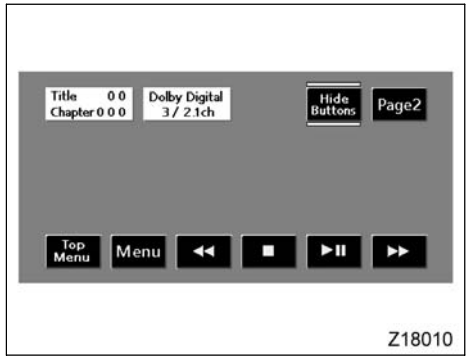

On the screen

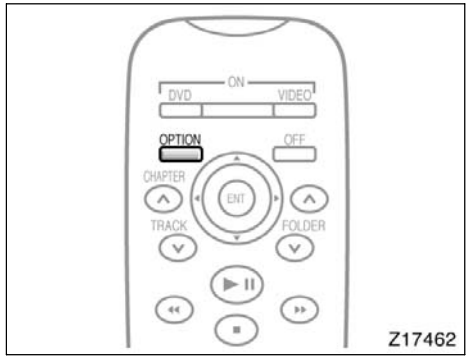

Controller

To turn off the switches on the screen, push the “OPTION” button on the controller once again or push the “Hide Buttons” on the screen.

—DVD player operation

NOTE: The playback condition of some DVD video discs may be determined by the DVD video software producer. This DVD player plays discs as the software producer intended. Therefore, some functions may not work properly. Be sure to read the instruction manual for the DVD video disc separately provided. For detailed information about DVD video discs, see “—DVD video disc information” on page 229 in this Section.

Precautions for DVD video discs

When recording on a DVD video, video CD or audio tracks may not record in some cases while the menu is displayed. As audio will not play in this case, verify that the video tracks are playing and then activate playback.

The title/chapter number and playback time display may not appear while playing back certain DVD video discs.

⚠ CAUTION

Conversational speech on some DVDs is recorded at a low volume to emphasize the impact of sound effects. If you adjust the volume assuming that the conversations represent the maximum volume level available for the DVD, you may be startled by louder sound effects or when you change to a different audio source. Loud sounds may have a significant impact on the human body or pose a driving hazard. Keep this in mind when you adjust the volume.

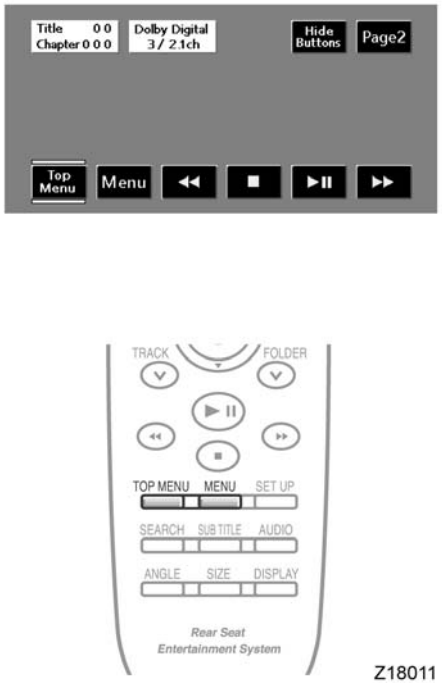

TURNING THE MENU SCREEN FOR THE DISC ON OR OFF

To turn on the menu screen for the disc, push the “Top Menu” or the “Menu” switch on the screen. You can also turn on the menu screen by pushing the “MENU” or “TOP MENU” button on the controller.

For the operation of the menu screen, see the separate manual for the DVD disc.

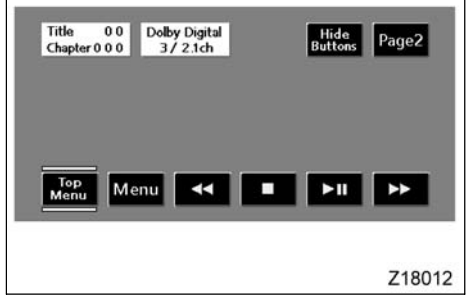

You can select the menu for the disc by the joystick and the “ENT” button on the controller.

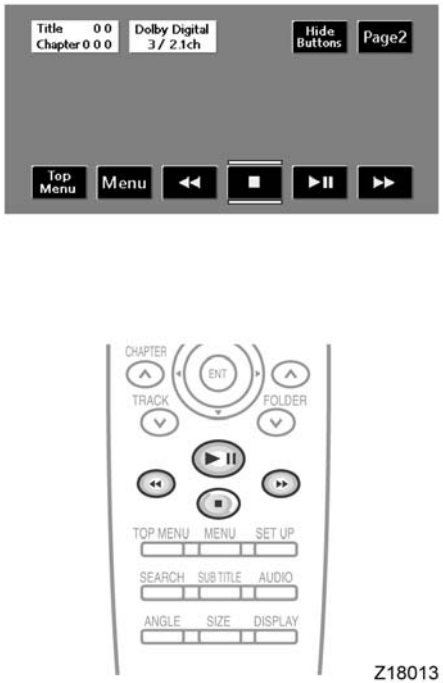

OPERATING THE “▶❚❚”, “■”, “◀◀” AND “▶▶” SWITCHES/BUTTONS

“▶❚❚” switch/button: Push this switch/button to pause the disc or to cancel the pause and return to normal playing.

“■” switch/button: This switch/button stops a screen when the DVD player is operated.

“◀◀” and “▶▶” switches/buttons: Push and hold the “◀◀” or “▶▶” switch/button to fast forward or reverse. When you release the switch/button, the DVD player will resume playing.

Push the “▶▶” switch/button while pausing, the DVD video plays the slow–motion video replay.

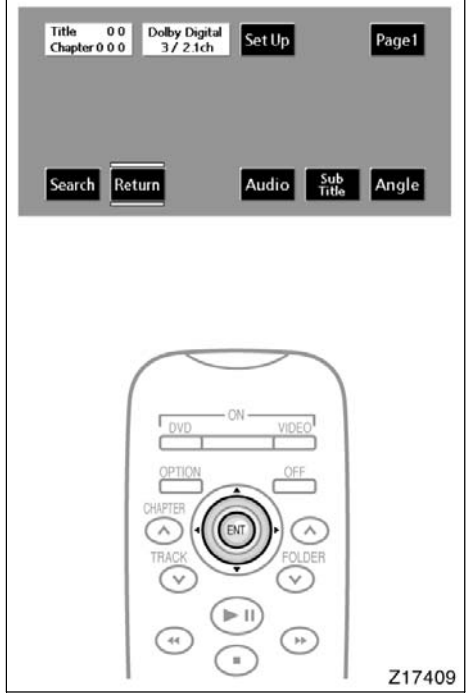

SKIPPING TO THE PREDETERMINED SCREEN

To skip to the predetermined screen, push the “Return” switch. The DVD player starts playing from the beginning of the predetermined screen.

For further details of the predetermined screen, see the separate manual for the DVD disc.

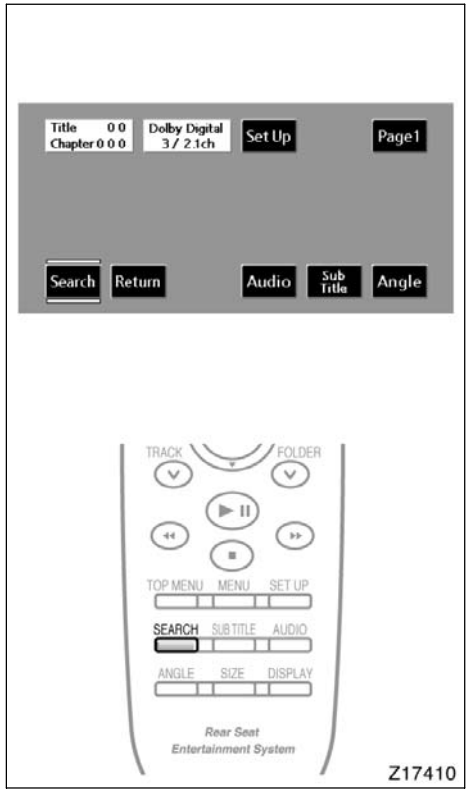

SELECTING THE TITLE

To display the searching title screen, push the “Search” switch on the screen. You can also display the screen by pushing the “SEARCH” button on the controller.

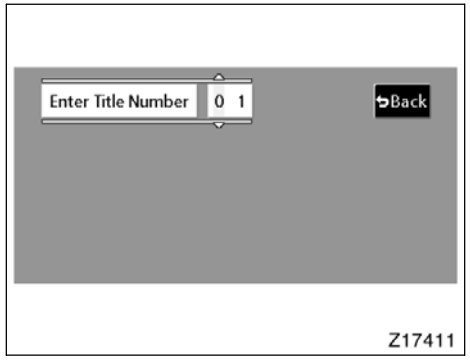

Select the title number by using the joystick and push the “ENT” button to enter the number. The player starts playing disc for that title number. The selected title number will appear on the screen.

Push the “Back” switch to return to the menu screen.

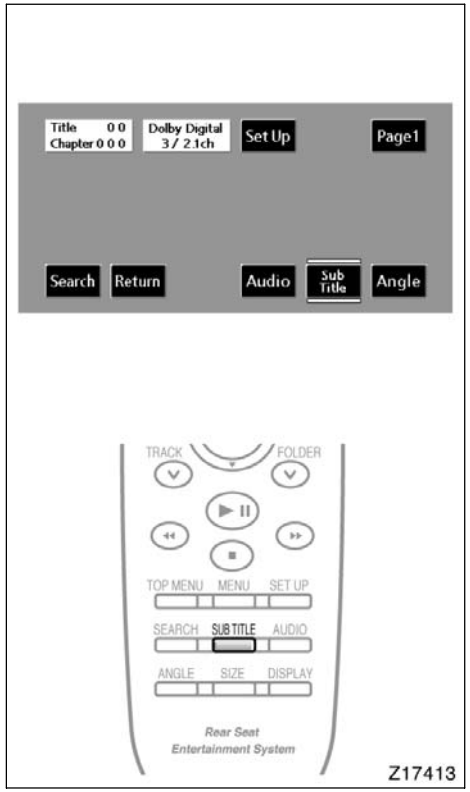

CHANGING THE SUBTITLE LANGUAGE

Push the “Sub Title” switch on the screen, and then the changing subtitle language screen will appear. You can also display the screen by pushing the “SUB TITLE” button on the controller.

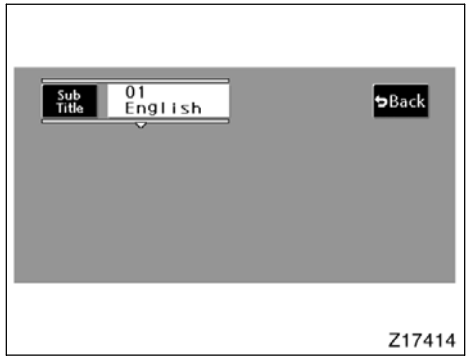

Each time you push the “Sub Title” switch, another language stored on the disc is selected.

To turn off the subtitles, push the “Hide Buttons” switch.

Push the “Back” switch to return to the previous screen.

The selected subtitle language will appear on the screen.

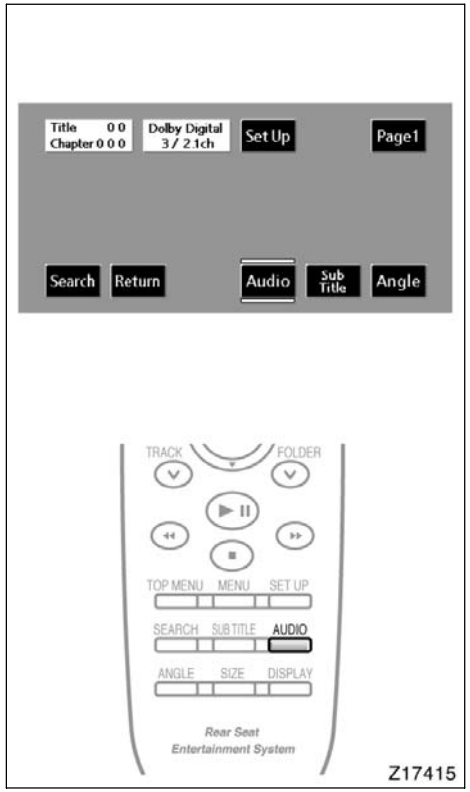

CHANGING AUDIO LANGUAGE

Push the “Audio” switch on the screen and then the changing audio language screen will appear. You can also display the screen by pushing the “AUDIO” button on the controller.

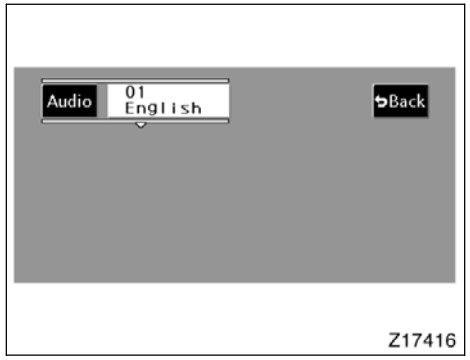

Each time you push the “Audio” switch, another language stored on the disc is selected.

To turn off the audio language screen, push the “Hide Buttons” switch.

Push the “Back” switch to return to the previous screen.

The selected audio language will appear on the screen.

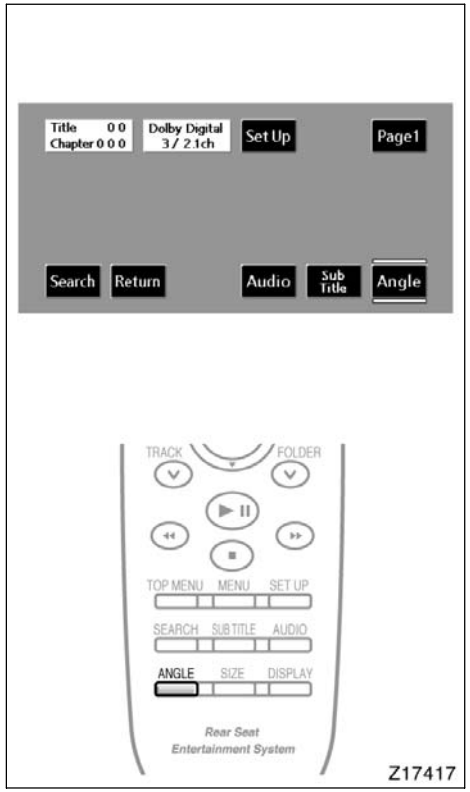

CHANGING ANGLE SCREEN

Push the “Angle” switch on the screen, and then the changing angle screen will appear. You can also display the screen by pushing the “ANGLE” button on the controller.

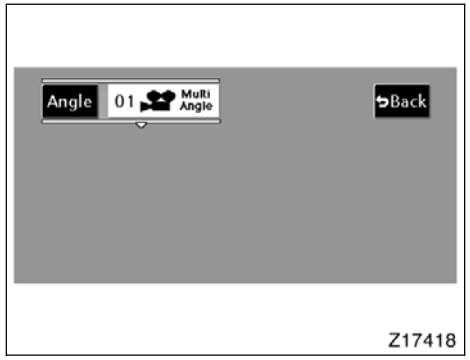

The angle can be selected for discs that are multi–angle compatible when the “ ” mark appears on the screen. Each time you push the “Angle” switch, the angle changes. The angle number which you can select will appear on the screen.

To turn off the screen, push the “Hide Buttons” switch.

Push the “Back” switch to return to the previous screen.

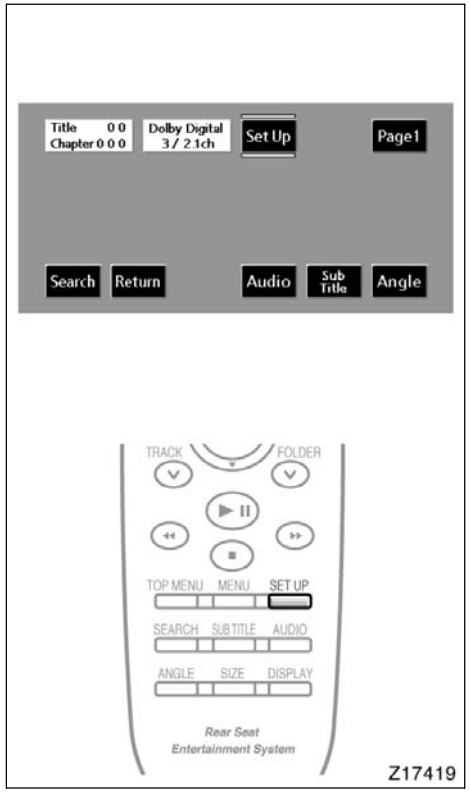

CHANGING THE INITIAL SETTING

Push the “Set Up” switch on the screen, and then the initial setting screen will appear. You can also display the screen by pushing the “SET UP” button on the controller. You can change the initial setting.

After the setting is done, the player plays from the beginning of the chapter or the track.

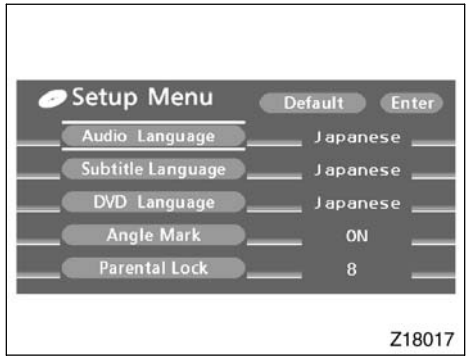

Setup Menu screen

There are initial setting switches on the “Setup Menu” screen.

After you change the initial setting, push the “Enter” switch. The initial setting switch will be turned off and return to the picture previously.

When the “Default” switch is pushed, all menus are initialized.

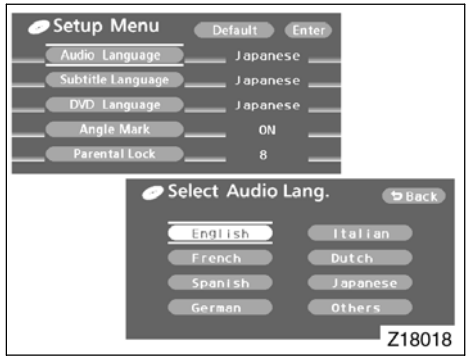

CHANGING THE AUDIO LANGUAGE

Push the “Audio Language” switch on the “Setup Menu” and the “Select Audio Lang.” screen appears.

Select the language you want to hear by pushing the appropriate switch on the screen.

To return to the “Setup Menu” screen, push the “Back” switch.

If you cannot find the language you want to hear, push the “Others” switch. The “Enter Audio Lang. Code” screen will appear.

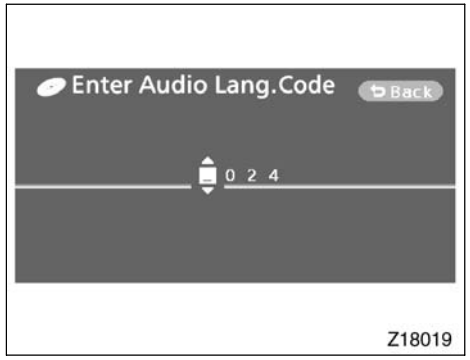

To select an audio language, use the joystick to enter the appropriate 4–digit language code. For details of the language codes, see the language code list.

If a code which is not on the list is entered and the “ENT” button is pushed, the “Incorrect Code” screen will appear. Enter the code of the language you want to hear again.

To return to the “Select Audio Lang.” screen, push the “Back” switch.

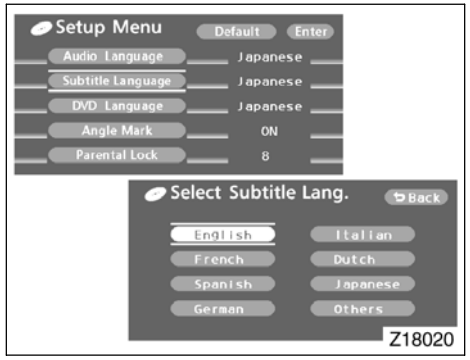

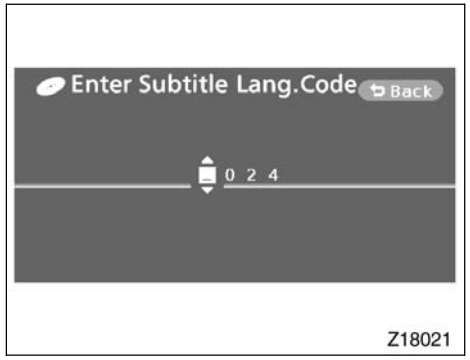

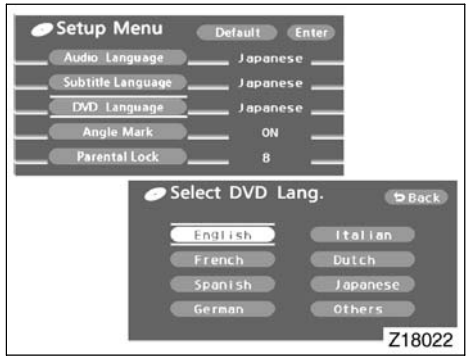

CHANGING THE SUBTITLE LANGUAGE

To display the “Select Subtitle Lang.” screen, push the “Subtitle Language” switch on the “Setup Menu” screen.

Select the language you want to read by pushing the appropriate switch on the screen.

To return to the “Setup Menu” screen, push the “Back” switch.

If you cannot find the language you want to read, push the “Others” switch. The “Enter Subtitle Lang. Code” screen will appear.

To enter the code of the language you want to read, use the joystick to enter the appropriate 4–digit language code. For details about the language codes, see the language code list.

Push the “ENT” button on the controller. If numbers which are not on the list are entered and the “ENT” button is pushed, the “Incorrect code” screen will appear. Enter the language code you want to read again.

To return to the “Select Subtitle Lang.” screen, push the “Back” switch on the screen.

CHANGING THE DVD LANGUAGE

To display the “Select DVD Lang.” screen, push the “DVD Language” switch on the “Setup Menu” screen.

Select the language you want to read on the screen.

To return to the “Setup Menu” screen, push the “Back” switch.

If you cannot find a language you want to read, push the “Others” switch. The “Enter DVD Lang. Code” screen will appear.

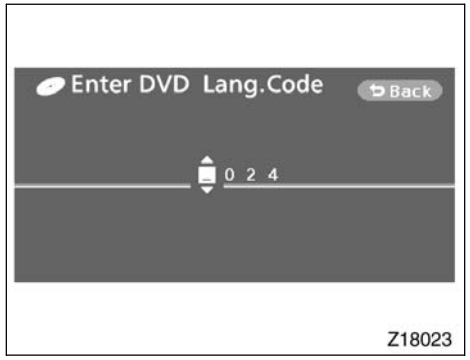

To enter the code of the language you want to read, use the joystick to enter the appropriate 4–digit language code. For details about the language codes, see the language code list.

Push the “ENT” button on the controller. If numbers which are not on the list are entered and the “ENT” button is pushed, the “Incorrect code” screen will appear. Enter the language code you want to read again.

To return to the “Select DVD Lang.” screen, push the “Back” switch on the screen.

TURNING THE ANGLE MARK ON OR OFF

The angle mark can be turned on for discs that are multi–angle compatible.

Each time you push the “Angle Mark” switch on the screen, the angle mark turns on or off alternately.

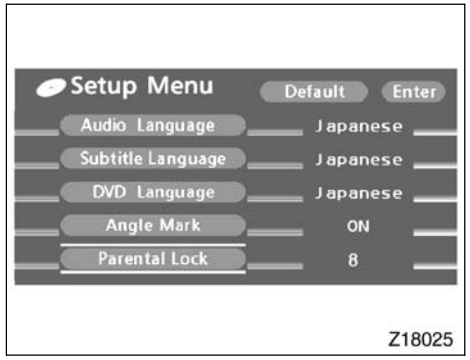

SETTING LEVEL OF VIEWER RESTRICTIONS

You can restrict the play back screen by setting the viewer restrictions. You can prevent the restriction with a password. Some discs do not supply a restriction.

To set the level of viewer restriction, push the “Parental Lock” switch on the “Setup Menu” screen. The “Enter Personal Code” screen will appear.

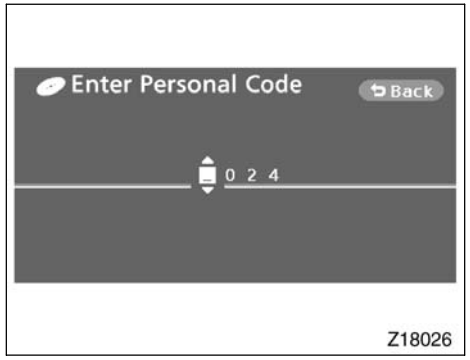

Enter the password and push the “ENT” button. The “Select Restriction Level” screen will appear.

You cannot change the setting without inputting the password. When you forget or change the password, push the “◀” side of the joystick ten times to initialize the password.

To return to the “Setup Menu” screen, push the “Back” switch.

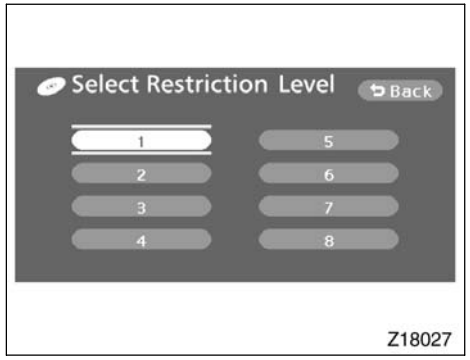

Push a parental level (1—8). The smaller the level number, the stricter the age limit. Push the “Back” switch to return to the “Setup Menu” screen.

SETTING THE DISPLAY MODE

Pushing the “SIZE” button on the controller causes the display modes to change sequentially as follows:

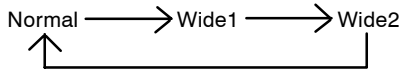

LANGUAGE CODE LIST

Code	Language
1001	Japanese
0514	English
0618	French
0405	German
0920	Italian
0519	Spanish
2608	Chinese
1412	Dutch
1620	Portuguese
1922	Swedish
1821	Russian
1115	Korean
0512	Greek
0101	Afar
0102	Abkhazian
0106	Afrikaans
0113	Amharic
0118	Arabic
0119	Assamese

0125	Aymara
0126	Azerbaijani
0201	Bashkir
0205	Byelorussian
0207	Bulgarian
0208	Bihari
0209	Bislama
0214	Bengali
0215	Tibetan
0218	Breton
0301	Catalan
0315	Corsican
0319	Czech
0325	Welsh
0401	Danish
0426	Bhutani
0515	Esperanto
0520	Estonian
0521	Basque
0601	Persian
0609	Finnish

0610	Fiji
0615	Faroese
0625	Frisian
0701	Irish
0704	Scots-Gaelic
0712	Galician
0714	Guarani
0721	Gujarati
0801	Hausa
0809	Hindi
0818	Croatian
0821	Hungarian
0825	Armenian
0901	Interlingua
0905	Interlingue
0911	Inupiak
0914	Indonesian
0919	Icelandic
0923	Hebrew
1009	Yiddish
1023	Javanese

1101	Georgian
1111	Kazakh
1112	Greenlandic
1113	Cambodian
1114	Kannada
1119	Kashmiri
1121	Kurdish
1125	Kirghiz
1201	Latin
1214	Lingala
1215	Laothian
1220	Lithuanian
1222	Latvian
1307	Malagasy
1309	Maori
1311	Macedonian
1312	Malayalam
1314	Mongolian
1315	Moldavian
1318	Marathi
1319	Malay

1320	Maltese
1325	Burmese
1401	Nauru
1405	Nepali
1415	Norwegian
1503	Occitan
1513	(Afan) Oromo
1518	Oriya
1601	Punjabi
1612	Polish
1619	Pashto, Pushto
1721	Quechua
1813	Rhaeto-Romance
1814	Kirundi
1815	Romanian
1823	Kinyarwanda
1901	Sanskrit
1904	Sindhi
1907	Sangho
1908	Serbo-Croatian
1909	Sinhalese

1911	Slovak
1912	Slovenian
1913	Samoan
1914	Shona
1915	Somali
1917	Albanian
1918	Serbian
1919	Siswati
1920	Sesotho
1921	Sundanese
1923	Swahili
2001	Tamil
2005	Telugu
2007	Tajik
2008	Thai
2009	Tigrinya
2011	Turkmen
2012	Tagalog
2014	Setswana
2015	Tonga
2018	Turkish

2019	Tsonga
2020	Tatar
2023	Twi
2111	Ukrainian
2118	Urdu
2126	Uzbek
2209	Vietnamese
2215	Volapük
2315	Wolof
2408	Xhosa
2515	Yoruba
2621	Zulu

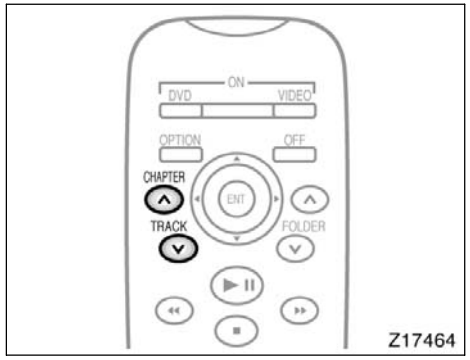

SELECTING THE CHAPTER/TRACK

To select the chapter/track, push the “CHAPTER/TRACK ∨” button or “CHAPTER/TRACK ∧” button on the controller until the number of the chapter/track you want to select appears on the screen.

USING THE CONTROL SCREEN

When playing a disc, push the “DVD” button on the controller. The status screen will appear on the screen.

—DVD player operation (video CD/audio CD/CD text/MP3)

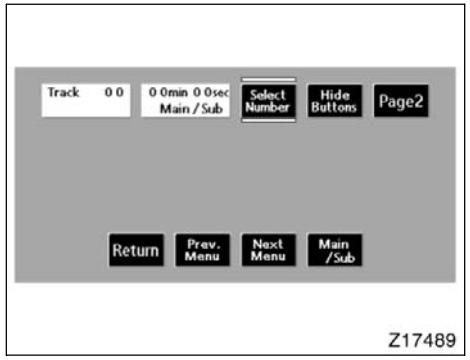

SELECTING THE DISC MENU NUMBER (video CD only)

Push the “Select Number” switch and then the disc menu number search screen will appear. You can also display the screen by pushing the “SEARCH” button on the controller.

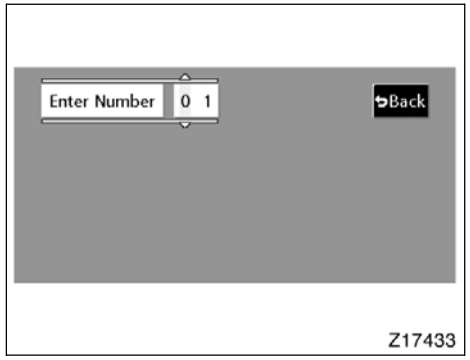

Enter the disc menu number by using the joystick and push the “ENT” button. The player starts playing the disc from the entered disc menu number. The entered disc menu number will appear on the screen.

Push the “Back” switch to return to the menu screen.

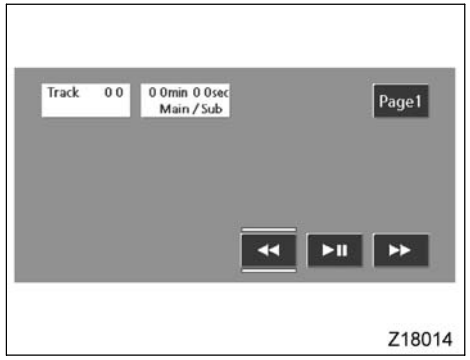

OPERATING THE “▶❚❚”, “◀◀” AND “▶▶” SWITCHES (video CD only)

“▶❚❚” switch: Push this switch to pause the disc or to cancel the pause and return to normal playing.

“◀◀” and “▶▶” switches: Push this switch to fast forward or reverse. If you want to return to the beginning of the current track, release the switch.

Video CD only—

Push the “▶▶” switch/button while pausing, the DVD video plays the slow–motion video replay.

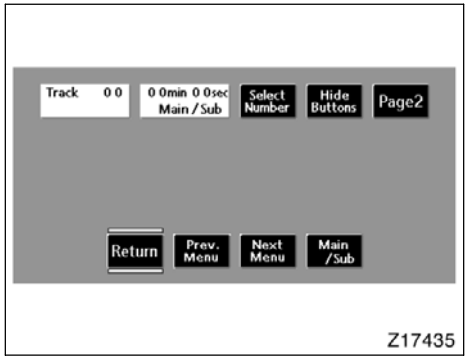

TURNING ON THE DISC MENU (video CD only)

Push the “Return” switch to turn on the menu screen for the disc.

For the operation of the menu screen, see the manual for the video CD.

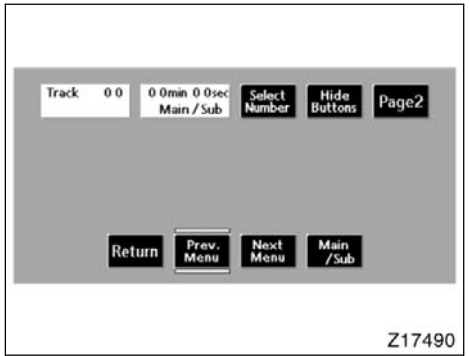

CHANGING MENU PAGE OR TRACK (video CD only)

Push the “Next Menu” or “Prev. Menu” switch while the disc menu is displayed. The next or previous page will appear on the screen.

Push the “Next Menu” or “Prev. Menu” switch while the player is playing video. The next or previous track will be searched and played.

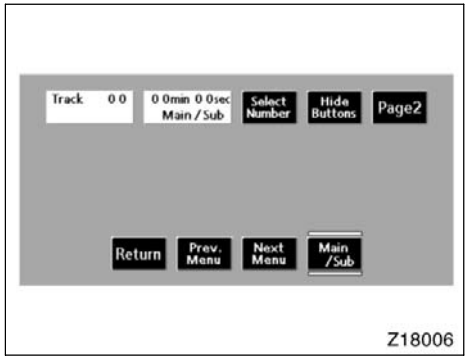

CHANGING A MULTIPLEX TRANSMISSION (video CD only)

Push the “Main/Sub” switch to change a multiplex transmission. The mode changes from Main/Sub to Main to Sub and back to Main/Sub by pushing the “Main/Sub” switch.

CHANGING THE INITIAL SETTING (video CD only)

Push the “Set Up” switch on the screen and then the initial setting screen will appear. You can also display the screen by pushing the “SET UP” button on the controller. You can change the initial setting. (See “CHANGING THE INITIAL SETTING” on page 216 in this Section for details.)

After the setting is done, the player plays from the beginning of the chapter or the track.

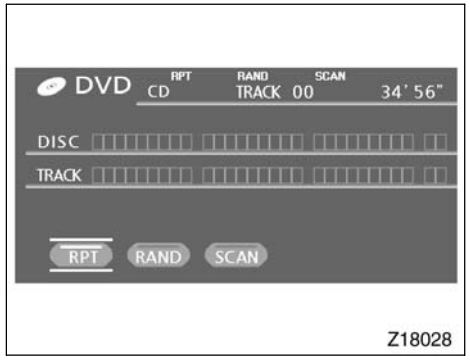

CD Text

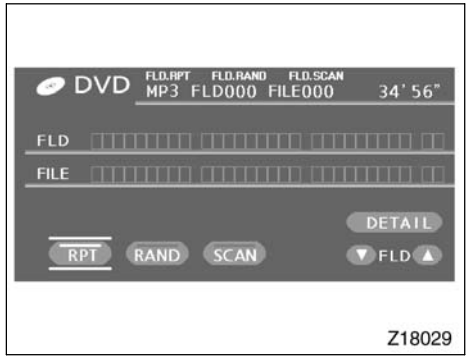

CD MP3

USING THE CONTROL SCREEN

When playing a disc, push the “DVD” button on the controller. The control screen will appear on the screen.

CD text only—

The disc title and track title will appear on the screen when pushing the “DVD” button.

Details of the specific switches, controls and features are described below.

1. “RPT” switch (audio CD and CD text)

   Push the “RPT” switch while the track is playing. When the track ends, it will automatically replay. To turn off the repeat feature, push this switch again.

2. “RAND” switch (audio CD and CD text)

   Push the “RAND” switch. The player will play the tracks on the disc in random order. To turn off the random feature, push this switch again.

3. “SCAN” switch (audio CD and CD text)

   Push the “SCAN” switch. The player will scan all the tracks on the disc. To stop scanning, push this switch again. When the player has scanned all the tracks on the disc, it will stop scanning.

MP3 only—

Folder and file names will appear on the screen when the “DVD” button is pushed.

The details of the specific switches, controls, and features are described below.

1. “RPT” switch

   When the “RPT” switch is pushed while a track is played, the track file will be played repeatedly until the switch is pushed again. When the switch is pushed for at least 0.8 seconds, all the files in a folder will be played repeatedly. To turn off repeat play mode, push the switch again.

2. “RAND” switch

   When the “RAND” switch is pushed, the files in a current folder will be played in random order. When the switch is pushed for at least 0.8 seconds, all the files in the disk will be played in random. To turn off random play mode, push the switch again.

3. “SCAN” switch

   When the “SCAN” switch is pushed, all the files in a current folder will be scanned. Only the first 10 seconds of each file are played sequentially until all the files are scanned. When the switch is pushed for at least 0.8 seconds, the first 10 seconds of each initial file of all the folders in the disk will be played sequentially until the entire initial files are scanned. To stop scanning, push the switch again.

4. “FLD▲” switch

   When the switch is pushed, the initial file of the next folder will be played.

5. “▼FLD” switch

   When the switch is pushed, the initial file of the previous folder will be played.

6. “DETAIL” switch

   When the switch is pushed while a track is played, the detailed file information of the track will be displayed.

—Screen adjustment

You can adjust the color, contrast, tone and brightness of the screen.

Push the “DISPLAY” button on the controller and the “Display” screen will appear.

The screen may turn purple to deflect the sunlight. This is not a malfunction.

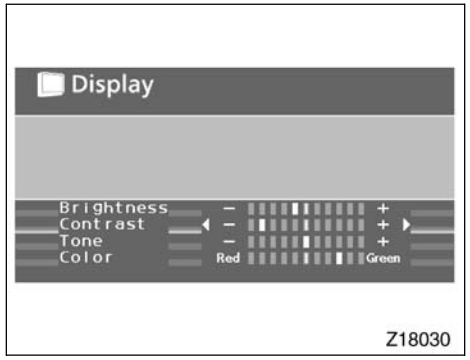

Operate the joystick up and down to select Brightness, Contrast, Tone, or Color and left and right to make adjustments.

	– or “Red”	+ or “Green”
Brightness	Darkens	Brightens
Contrast	Weakens the contrast	Strengthens the contrast
Tone	Weakens the tone	Strengthens the tone
Color	Strengthens the red color	Strengthens the green color

After adjusting the screen, push the “ENT” button or “DISPLAY” button to return to the previous screen.

—Selecting the video mode

The audio machine connected to the input terminal adapter can be played in the video mode.

To select the video mode, push the “VIDEO” button on the controller.

—DVD video disc information

DVD PLAYER AND DVD VIDEO DISCS

This DVD player conforms to NTSC color TV formats. DVD video discs conforming to other formats such as PAL or SECAM cannot be used.

Region codes: Some DVD video discs have a region code indicating where you can use. If the DVD video disc is not labeled “ALL” or “1”, you cannot use it in this DVD player. If you attempt to play an inappropriate DVD video disc in this player, “REGION CODE ERROR” appears on the screen. Even if the DVD video disc does not have a region code, in some cases you cannot use it.

Marks shown on DVD video discs:

NTSC	Indicates NTSC format of color TV.
2	Indicates the number of audio tracks.
2	Indicates the number of language subtitles.
3	Indicates the number of angles.
16:9 LB 4:3	Indicates the screen to be selected. Wide screen: 16:9 Standard: 4:3
ALL 1	Indicates regions in which this video disc can be played. ALL: all countries Number: region code

DVD VIDEO DISC GLOSSARY

DVD video discs: Digital Versatile Disc that holds video. DVD video discs have adopted “MPEG2”, one of the world standards of digital compression technologies. The picture data is compressed by 1/40 on average and stored. Variable rate encoded technology in which the volume of data assigned to the picture is changed depending on the picture format has also been adopted. Audio data is stored using PCM and Dolby digital, which enables higher quality of sound. Furthermore, multi–angle and multi–language features will also help you enjoy the more advanced technology of DVD video.

Viewer restrictions: This feature limits what can be viewed in conformity with the level of restrictions of the country. The level of restrictions varies depending on the DVD video disc. Some DVD video discs cannot be played at all, or violent scenes are skipped or replaced with other scenes.

Level 1: DVD video discs for children can be played.

Level 2—7: DVD video discs for children and G–rated movies can be played.

Level 8: All types of DVD video discs can be played.

Multi–angle feature: You can enjoy the same scene at different angles.

Multi–language feature: You can select the language of the subtitles and audio.

Region codes: Region codes are provided on DVD players and DVD discs. If the DVD video disc does not have the same region code as the DVD player, you cannot play the disc on the DVD player. For region codes, see page 229.

Audio: This DVD player can play liner PCM, Dolby digital, dts and MPEG audio format DVD. Other decoded type cannot be played.

Title and chapter: Video and audio programs stored on DVD video discs are divided in parts by title and chapter.

Title: The largest unit of the video and audio programs stored on DVD video discs. Usually, one piece of a movie, one album, or one audio program is assigned as a title.

Chapter: A unit smaller than a title. A title comprises plural chapters.

Manufactured under license from Dolby Laboratories. “Dolby”, “Pro Logic”, and the double–D symbol are trademarks of Dolby Laboratories. Confidential unpublished works.
©1992–1997 Dolby Laboratories. All rights reserved.

“dts” is a trademark of Digital Theater Systems, Inc.

—A/V input adapter

The rear entertainment system plays videos and sound when an audio–video equipment is connected to the A/V input adapter. For details, refer to the manufacturer’s instructions.

—Power outlet

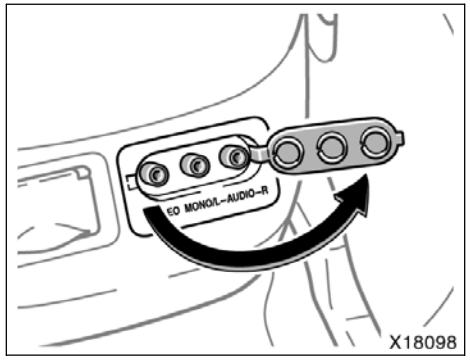

To use the adapter, open the cover.

The A/V input adapter is composed of 3 input adapters.

Yellow: Image input adapter
Red: Audio input adapter
White: Audio input adapter

NOTICE

Close the cover when the A/V input adapter is not in use. Inserting a foreign object other than the appropriate plug may cause electrical failure or short circuit.

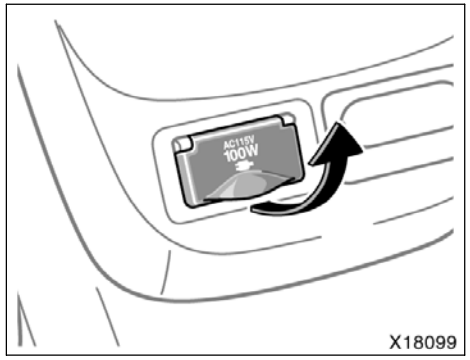

This power outlet is designed for use as a power supply for the audio device connected to the A/V input adapter.

The engine switch must be in the “ON” position for the power outlet to be used.

The maximum capacity for this power outlet is 115 VAC/100W. If you attempt to use an appliance that requires more than 115 VAC or 100W, the protection circuit will activate and cut the power supply. The power supply will restart automatically when you use an appliance that operates within the 115 VAC/100W limits.

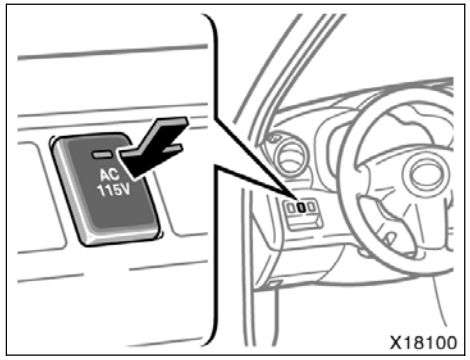

To use the power outlet, push the main switch on the instrument panel.

An indicator light will illuminate to indicate that the power outlet is ready for use.

Push the main switch once again to turn the power outlet off. When the power outlet is not in use, make sure that the main switch is turned off.

NOTICE

- ***To prevent the battery from being discharged, do not use the power outlet longer than necessary when the engine is not running.***
- ***Close the power outlet lid when the power outlet is not in use. Inserting a foreign object other than the appropriate plug that fits the outlet may cause electrical failure or short circuit.***

The power outlet is not designed for the following electric appliances even if their power consumption is under 115 VAC/100W. These appliances may not operate properly.

- Appliances with high initial peak wattage: cathode–ray tube type televisions, compressor–driven refrigerators, electric pumps, electric tools, etc.
- Measuring devices which process precise data: medical equipment, measuring instruments, etc.
- Other appliances requiring an extremely stable power supply: microcomputer–controlled electric blankets, touch sensor lamps, etc.

Certain electrical appliances may cause radio noise.

Audio/video system operating hints

NOTICE

To ensure correct audio/video system operation:

- ***Be careful not to spill beverages over the audio system.***
- ***Do not put anything other than a compact disc into the slot.***
- ***Do not put anything other than a DVD video, video CD, dts–CD or audio CD into the DVD player.***
- ***The use of a cellular phone inside or near the vehicle may cause a noise from the speakers of the audio system which you are listening to. However, this does not indicate a malfunction.***

RADIO RECEPTION

Usually, a problem with radio reception does not mean there is a problem with your radio—it is just the normal result of conditions outside the vehicle.

For example, nearby buildings and terrain can interfere with FM reception. Power lines or telephone wires can interfere with AM signals. And of course, radio signals have a limited range. The farther you are from a station, the weaker its signal will be. In addition, reception conditions change constantly as your vehicle moves.

Here are some common reception problems that probably do not indicate a problem with your radio:

FM

Fading and drifting stations—Generally, the effective range of FM is about 40 km (25 miles). Once outside this range, you may notice fading and drifting, which increase with the distance from the radio transmitter. They are often accompanied by distortion.

Multi–path—FM signals are reflective, making it possible for two signals to reach your antenna at the same time. If this happens, the signals will cancel each other out, causing a momentary flutter or loss of reception.

Static and fluttering—These occur when signals are blocked by buildings, trees, or other large objects. Increasing the bass level may reduce static and fluttering.

Station swapping—If the FM signal you are listening to is interrupted or weakened, and there is another strong station nearby on the FM band, your radio may tune in the second station until the original signal can be picked up again.

AM

Fading—AM broadcasts are reflected by the upper atmosphere–especially at night. These reflected signals can interfere with those received directly from the radio station, causing the radio station to sound alternately strong and weak.

Station interference—When a reflected signal and a signal received directly from a radio station are very nearly the same frequency, they can interfere with each other, making it difficult to hear the broadcast.

Static—AM is easily affected by external sources of electrical noise, such as high tension power lines, lightening, or electrical motors. This results in static.

FCC ID: BABBT010A

NOTE: This device complies with Part 15 of the FCC Rules. Operation is subject to the following two conditions, (1) This device may not cause harmful interference and (2) This device must accept any interference received, including interference that may cause undesired operation.

⚠ CAUTION

FCC WARNING:

Changes or modifications in construction not expressly approved by the party responsible for compliance could void the user’s authority to operate the equipment.

Radio frequently exposure. This device is approved for Mobile Application only and, to comply with applicable FCC radio frequency exposure regulations, must be used with a distance of at least 7.9in. (20cm) between the antenna and the body of any person at all time during use.

For vehicles sold in the U.S.A. (and Canada)—

Part 15 of the FCC Rules
FCC Warning:
Any unauthorized changes or modifications to this equipment will void the user’s authority to operate this device.

Laser products

- **Do not take this unit apart or attempt to make any changes yourself. This is an intricate unit that uses a laser pickup to retrieve information from the surface of compact discs. The laser is carefully shielded so that its rays remain inside the cabinet. Therefore, never try to disassemble the player or alter any of its parts since you may be exposed to laser rays and dangerous voltages.**
- **This product utilizes a laser. Use of controls or adjustments or performance of procedures other than those specified herein may result in hazardous radiation exposure.**

CARING FOR YOUR COMPACT DISC PLAYER, DVD PLAYER AND DISCS

- Extremely high temperatures can keep your compact disc player and DVD player from working. On hot days, use the air conditioning to cool the vehicle interior before you use the players.
- Bumpy roads or other vibrations may make your compact disc player and DVD player skip.
- If moisture gets into your compact disc player and DVD player, the players may not play even though they appear to be working. Remove the disc from the player and wait until it dries.

⚠ CAUTION

Compact disc players and DVD players use an invisible laser beam which could cause hazardous radiation exposure if directed outside the unit. Be sure to operate the players correctly.

Compact disc player

Audio CDs	COMPACT disc DIGITAL AUDIO / COMPACT disc DIGITAL AUDIO TEXT / COMPACT disc DIGITAL AUDIO Recordable / COMPACT disc DIGITAL AUDIO ReWritable

- Use only compact discs marked as shown above. The following products may not be playable on your compact disc player.

  SACD
  dts–CD
  Copy–protected CD
  CD–ROM

DVD player

Audio CDs	COMPACT disc DIGITAL AUDIO, COMPACT disc DIGITAL AUDIO TEXT, dts
DVD video discs	DVD VIDEO, DVD VIDEO
Video CDs	VIDEO CD, COMPACT disc DIGITAL VIDEO

- Use only discs marked as shown above. The following products may not be playable on your DVD player.

  SACD
  Copy–protected CD
  CD–R (CD–Recordable)
  CD–RW (CD–Re–writable)
  CD–ROM
  DVD–R
  DVD+R
  DVD+RW
  DVD–RW
  DVD–ROM
  DVD–RAM

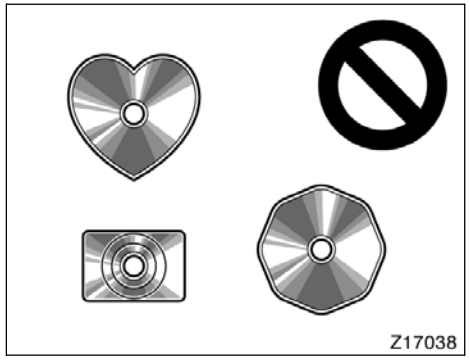

Special shaped discs

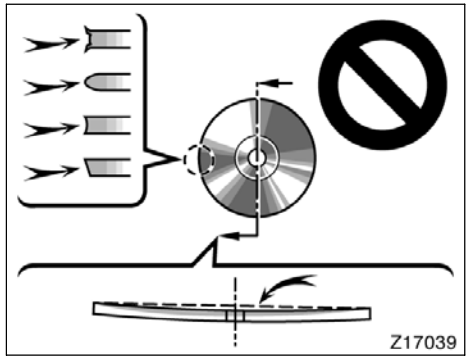

Low quality discs

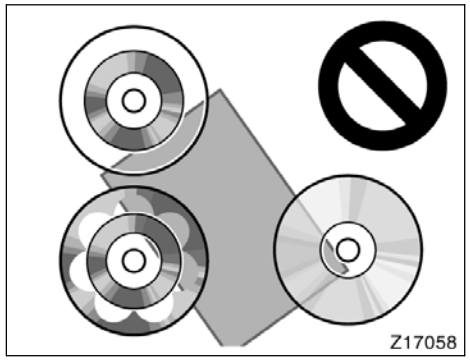

Transparent/translucent discs

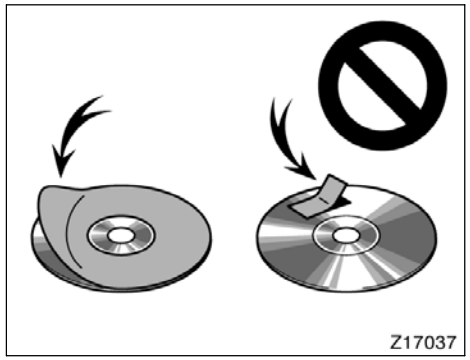

Labeled discs

NOTICE

- ***Do not use special shaped, transparent/translucent, low quality or labeled discs such as those shown in the illustrations. The use of such discs may damage the player or changer, or it may be impossible to eject the disc.***
- ***This system is not designed for use of Dual Disc. Do not use Dual Disc because it may cause damage to the player or changer.***

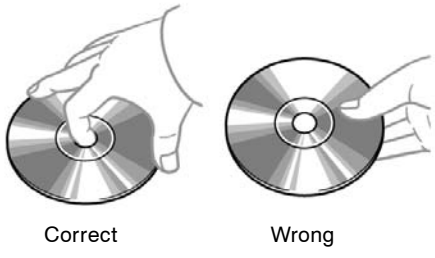

- Handle the discs carefully, especially when you are inserting them. Hold them on the edge and do not bend them. Avoid getting fingerprints on them, particularly on the shiny side.
- Dirt, scratches, warping, pin holes, or other disc damage could cause the player to skip or to repeat a section of a chapter or track. (To see a pin hole, hold the disc up to the light.)
- Remove discs from the compact disc player when you are not playing them. Store them in their plastic cases away from moisture, heat, and direct sunlight.

To clean a disc: Wipe it with a soft, lint–free cloth that has been dampened with water. Wipe in a straight line from the center to the edge of the disc (not in circles). Dry it with another soft, lint–free cloth. Do not use a conventional record cleaner or anti–static device.

MP3/WMA FILES

- MP3 (MPEG Audio Layer 3) and WMA (Windows Media Audio) are audio compression standards.
- The MP3/WMA player can play MP3 and WMA files on CD–ROM, CD–R and CD–RW discs.

  The unit can play disc recordings compatible with ISO 9660 level 1 and level 2 and with the Romeo and Joliet file system.
- When naming an MP3 or WMA file, add the appropriate file extension (.mp3 or .wma).
- The MP3/WMA player plays back files with .mp3 or .wma file extensions as MP3 or WMA files. To prevent noise and playback errors, use the appropriate file extensions.
- Multi–session compatible CDs can also be played.
- MP3 files are compatible with the ID3 Tag Ver. 1.0, Ver. 1.1, Ver. 2.2, and Ver. 2.3 formats. The unit cannot display disc title, track title and artist name in other formats.
- WMA files can contain a WMA tag that is used in the same way as an ID3 tag. WMA tags carry information such as track title, artist name.
- The emphasis function is available only when playing MP3/WMA files recorded at 32, 44.1 and 48 kHz. (The system can play MP3 files with sampling frequencies of 16, 22.05, and 24 kHz. However, the emphasis function is not available for files recorded at these frequencies.)
- The sound quality of MP3/WMA files generally improves with higher bit rates. In order to achieve a reasonable level of sound quality, discs recorded with a bit rate of at least 128 kbps are recommended.

  Playable bit rates
  MP3 files:
  MPEG1 LAYER3—64 to 320 kbps
  MPEG2 LSF LAYER3—64 to 160 kbps
  WMA files:
  Ver. 7, 8 CBR—48 to 192 kbps
  Ver. 9 CBR—48 to 320 kbps
- The MP3/WMA player does not play back MP3/WMA files from discs recorder using packet write data transfer (UDF format). Discs should be recorded using “pre–mastering” software rather than packet–write software.
- M3u playlists are not compatible with the audio player.
- MP3i (MP3 interactive) and MP3PRO formats are not compatible with the audio player.
- The MP3 player is compatible with VBR (Variable Bit Rate).
- When playing back files recorded as VBR (Variable Bit Rate) files, the play time will not be correctly displayed if fast–forward or reverse operations are used.
- It is not possible to check folders that do not include MP3/WMA files.
- MP3/WMA files in folders up to 8 levels deep can be played. However, the start of playback may be delayed when using discs containing numerous levels of folders. For this reason, we recommend creating discs with no more than two levels of folders.
- It is possible to play up to 192 folders or 255 files on one disc.

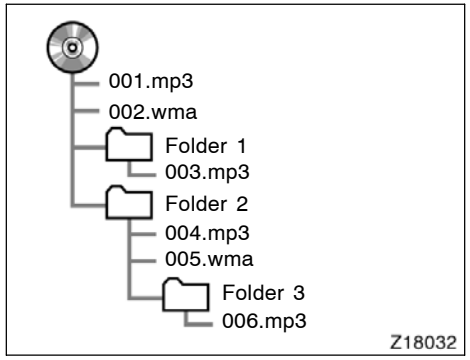

- The play order of the compact disc with the structure shown on the left is as follows:

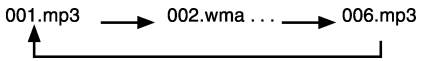

CD–R and CD–RW discs

- CD–R/CD–RW discs that have not been subject to the “finalizing process” (a process that allows discs to be played on a conventional CD player) cannot be played.
- It may not be possible to play CD–R/CD–RW discs recorded on a music CD recorder or a personal computer because of disc characteristics, scratches or dirt on the disc, or dirt, condensation, etc. on the lens of the unit.
- It may not be possible to play discs recorded on a personal computer depending on the application settings and the environment. Record with the correct format. (For details, contact the appropriate application manufacturers of the applications.)
- CD–R/CD–RW discs may be damaged by direct exposure to sunlight, high temperatures or other storage conditions. The unit may be unable to play some damaged discs.
- If you insert a CD–RW disc into the MP3/WMA player, playback will begin more slowly than with a conventional CD or CD–R disc.
- Recordings on CD–R/CD–RW cannot be played using the DDCD (Double Density CD) system.

TERMS

Packet write—

This is a general term that describes the process of writing data on–demand to CD–R, etc., in the same way that data is written to floppy or hard discs.

ID3 Tag—

This is a method of embedding track–related information in an MP3 file. This embedded information can include the track title, the artist’s name, the album title, the music genre, the year of production, comments and other data. The contents can be freely edited using software with ID3 tag editing functions. Although the tags are restricted to the number of characters, the information can be viewed when the track is played back.

WMA Tag—

WMA files can contain a WMA tag that is used in the same way as an ID3 tag. WMA tags carry information such as track title, artist name.

ISO 9660 format—

This is the international standard for the formatting of CD–ROM folders and files. For the ISO 9660 format, there are two levels of regulations.

Level 1:

The file name is in 8.3 format (8 character file names, with a 3 character file extension. File names must be composed of one–byte capital letters and numbers. The “_” symbol may also be included.)

Level 2:

The file name can have up to 31 characters (including the separation mark “.” and file extension). Each folder must contain fewer than 8 hierarchies.

m3u—

Playlists created using “WINAMP” software have a playlist file extension (.m3u).

MP3—

MP3 is an audio compression standard determined by a working group (MPEG) of the ISO (International Standard Organization). MP3 compresses audio data to about 1/10 the size of that on conventional discs.

WMA—

WMA (Windows Media Audio) is an audio compression format developed by Microsoft. It compresses files into a size smaller than that of MP3 files. The decoding formats for WMA files are Ver. 7, 8, and 9.

Hands–free phone system——Reference

Phone Setup (see page 245)

- **Pair phone**

  To use the hands–free system, you need to register your phone in the system.
- **Change name**

  The registered phone names can be changed.
- **Delete**

  The registered phones can be deleted.
- **List phones**

  The registered phone names can be checked.
- **Select phone**

  The registered phones can be selected.
- **Set passkey**

  The passkey can be changed.

Security (see page 250)

- **Set PIN**
  The PIN can be set or changed.
- **Phone book lock**
  The phone book can be locked.
- **Phone book unlock**
  The locked phone book can be unlocked.

System Setup (see page 254)

- **Adjust Guidance Volume**
  Guidance volume can be adjusted.
- **Initialize**

Phone Book (see page 254)

- **Add Entry**
  Phone numbers and voice tags can be registered.
- **Change Name**
  The registered names can be changed.
- **Delete Entry**
  The registered names can be deleted.
- **Delete Speed Dial**
  The registered speed dial can be deleted.
- **List names**
  The registered names can be checked.
- **Set Speed Dial**
  Speed dials can be set

Redial (see page 262)

Callback (see page 263)

Making a phone call (see page 265)

Receiving a phone call (see page 267)

Talking on the phone (see page 268)

—Some basics

This system supports Bluetooth®, a wireless system that allows you to make or receive calls without taking your hands from the steering wheel and without using cables to connect the phone and system.

The phone must be paired to the system before using the hands–free feature. If your cellular phone does not support Bluetooth®, this system will not function.

⚠ CAUTION

While you are driving, do not use a cellular phone or connect the Bluetooth® phone.

NOTICE

Do not leave your cellular phone in the car. The temperature indoor may be high and damage the phone.

The system may not function in the following conditions and places:

- The cellular phone is turned off.
- The current position is outside the communication area.
- The cellular phone is not connected.
- The cellular phone has a low battery.
- The cellular phone is located behind the seat or in the glove box and console box.
- The cellular phone touches or is covered with metal materials.

This system supports the following service.

- HFP (Hands Free Profile) Ver.1.0
- OPP (Object Push Profile) Ver.1.1

If your cellular phone does not support HFP, you cannot enter the Bluetooth® phone, and take OPP service individually.

Bluetooth® is a trademark owned by Bluetooth SIG. Inc.

When transferring ownership of the vehicle:

A lot of personal data is registered when you use the hands–free system. When transferring ownership of the vehicle, initialize the system.

If you initialize it, the former state will never come back again. Pay much attention when initializing the data.

You can initialize the following data in the system.

- Phone book data
- Dialed numbers and received calls
- Speed dial
- Bluetooth® phone data
- Security code

FCC ID: BABBT010A
IC ID: 2024B–BT010A
MADE IN CHINA

This device complies with Part 15 of the FCC Rules and RSS–210. Operation is subject to the following two conditions: (1) This device may not cause harmful interference, and (2) This device must accept any interference received, including interference that may cause undesired operation.

⚠ CAUTION

Changes or modifications not expressly approved by the party responsible for compliance could void the user’s authority to operate the equipment.

NOTE: This equipment has been tested and found to comply with the limits for a Class B digital device, pursuant to part 15 of the FCC Rules. These limits are designed to provide reasonable protection against harmful interference in a residential installation. This equipment generates, uses and can radiate radio frequency energy and, if not installed and used in accordance with the instructions, may cause harmful interference to radio communications. However, there is no guarantee that interference will not occur in a particular installation. If this equipment does cause harmful interference to radio or television reception, which can be determined by turning the equipment off and on, the user is encouraged to try to correct the interference by one or more of the following measures:
–Reorient or relocate the receiving antenna.
–Increase the separation between the equipment and receiver.
–Connect the equipment into an outlet on a circuit different from that to which the receiver is connected.
–Consult the dealer or an experienced radio/TV technician for help.

CAUTION: Radio Frequency Radiation Exposure
This equipment complies with FCC/IC radiation exposure limits set forth for uncontrolled equipment and meets the FCC radio frequency (RF) Exposure Guidelines in Supplement C to OET65 and RSS–102 of the IC radio frequency (RF) Exposure rules. This equipment has very low levels of RF energy that it deemed to comply without maximum permissive exposure evaluation (MPE). But it is desirable that it should be installed and operated with at least 20 cm and more between the radiator and person’s body (excluding extremities: hands, wrists, feet and legs).

Co–location: This transmitter must not be co–located or operated in conjunction with any other antenna or transmitter.

—Control and features

▶Steering switches and microphone

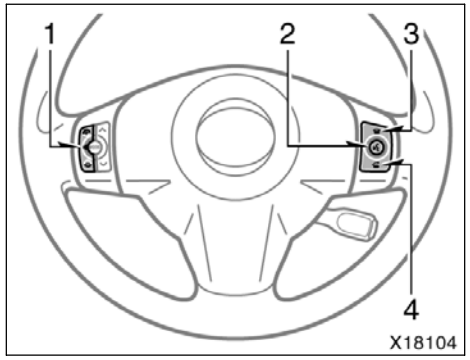

Steering switches

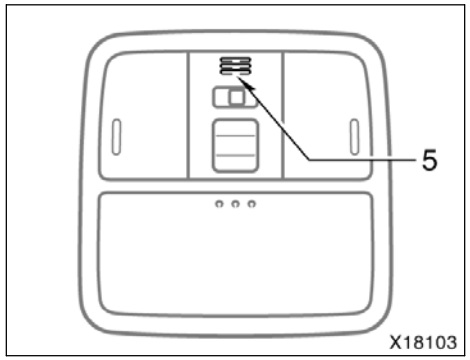

Microphone

1. Volume control switch

To increase the volume: Push “+”.
To decrease the volume: Push “–”.

When driving at 80 km/h (50 mph) or more, the volume automatically increases without switch adjustment. When your speed falls below 70 km/h (43 mph), the volume automatically returns to its original level.

Voice guidance volume cannot be changed by pushing the volume control switch on the steering wheel.

2. Talk switch

Pushing the talk switch turns the hands–free system on and initiates the speech command system.

3. On–hook switch

When the hands–free system is on, pushing the on–hook switch turns the hands–free system off.

Pushing and holding the talk switch ends the speech command system.

4. Off–hook switch

Pushing the off–hook switch turns the hands–free system on.

When receiving a call, pushing the off–hook switch allows you to talk on the phone.

5. Microphone

The microphone is used when talking on the phone or using the speech command system.

▶**Audio unit**

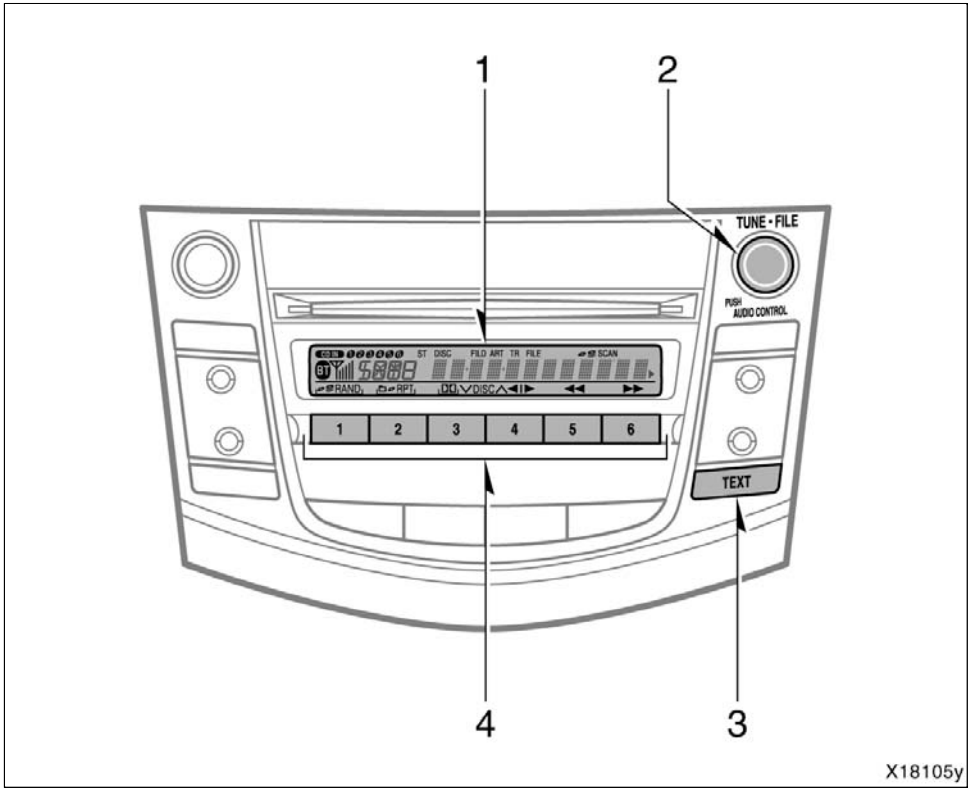

1. Display

Displays such items as the reception level, a party’s name and phone number. See “DISPLAY” described on the following page for further details about the display.

2. “AUDIO CONTROL” knob

Turning the “AUDIO CONTROL” knob displays the menu items, names, numbers, etc. to be selected. To select an item, push the “AUDIO CONTROL” knob. Due to safety concerns, the “AUDIO CONTROL” knob does not function while the vehicle is in motion.

3. “TEXT” button

When the party’s name or phone number is too long to be displayed, pushing and holding the “TEXT” button displays the remaining characters.

4. Preset buttons

Pushing the preset button displays the registered speed dial numbers.

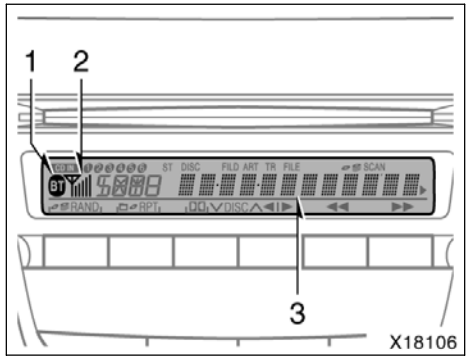

DISPLAY

1. Bluetooth® display

Displays when a Bluetooth® connection is made. If there is no display, the Bluetooth® connection has not been made and communication between the phone and system is not possible. When using the hands–free system, make sure that [BT] is displayed. The display is updated in real time.

2. Reception level display

Displays the cellular phone reception levels. This may not match the display on the cellular phone. The reception level of some cellular phones may not be displayed.

The number of bars is greater when the signal received is stronger.

3. Message display

Displays phone numbers, names, comments, menu items, etc.

—Phone Setup

The phone setup menu includes the following:

- Pair Phone

To use the hands–free system, you need to register your phone in the system. Once you have registered it, you can make a hands–free call. Up to 6 phones can be registered.

- Select Phone

When the system connects to Bluetooth®, the phone previously used is automatically selected. Select a different phone if necessary. Only the selected phone can be used with the hands–free system.

- Change Name

The registered phone names can be changed.

- List Phones

The registered phone names can be checked.

The following can be performed during the name playback:

- **Select phone**
- **Change name**
- **Delete**

- Set PassKey

The passkey can be changed. A 4 to 8 digit code can be input as a passkey.

- Delete

The registered phones can be deleted.

To enter the phone setup menu

1. Push the off–hook switch to turn the hands–free system on.
2. Follow voice guidance instructions, or turn the “AUDIO CONTROL” knob until [Setup] is displayed and push the knob.

[Setup. Please push the talk switch and say security, or phone setup.] is heard.

3. Follow voice guidance instructions, or turn the “AUDIO CONTROL” knob until [Phone Setup] is displayed and push the knob.

[Phone setup. Push the talk switch and say pair phone, select phone, change name, list phones, set passkey or delete.] is heard.

[XXX (phone name) already selected.] is heard and the phone name is displayed.

If no phone has been registered, the system may not function properly.

To pair phones

1. Push the talk switch and say [Pair phone], or turn the “AUDIO CONTROL” knob until [Pair Phone] is displayed and push the knob.

[Pair. Push the talk switch and say a name for the phone.] is heard.

2. Follow voice guidance instructions, or turn the “AUDIO CONTROL” knob until [Record Name] is displayed, push the knob and say the desired phone name.

[Push the talk switch and say confirm. Otherwise, say go back.] is heard.

3. Follow voice guidance instructions, or turn the “AUDIO CONTROL” knob until [Confirm] is displayed and push the knob.

[XXX (desired phone name) Ready for phone pairing. Please use the phone to connect it to the hands–free system. The passkey for the phone is....] is heard.

After [HANDS FREE] is displayed, a passkey* is displayed and [Searching.] is heard.

4. Input the displayed passkey into the phone.

[The phone is paired and ready for use. Returning to the main menu.] is heard and [Paired] is displayed.

The system may not function in the following cases:

- If 6 phones have already been registered.
- If the vehicle is moving.
- If the system cannot communicate with the phone.

*: Passkey is a password required to register a phone to the system.

INFORMATION

- ***To use the hands–free system, you need to register your phone in the system. Once you have registered it, you can make a hands–free call. Up to 6 phones can be registered.***
- ***For the operation of the phone, see the manual that comes with your cellular phone.***
- ***The passkey can be changed. See page 249 for changing the passkey.***

To select a phone

1. Push the talk switch and say [Select phone], or turn the “AUDIO CONTROL” knob until [Select Phone] is displayed and push the knob.

[Select phone. Push the talk switch and say the phone name or say list phones.] is heard.

2. Follow voice guidance instructions, or turn the “AUDIO CONTROL” knob until the desired phone name is displayed and push the knob.

When the phone is selected by a voice command:

[XXX (phone name) Push the talk switch and say confirm. Otherwise, say go back.] is heard and the phone name is displayed.

Follow voice guidance instructions, or turn the “AUDIO CONTROL” knob until [Confirm] is displayed and push the knob.

[XXX selected. Returning to the phone setup.] is heard.

When the phone is selected by using the knob:

[XXX selected. Returning to the phone setup.] is heard.

The system may not function in the following cases:

- If the phone is not found.
- If the system does not recognize the voice command.

To change a name

1. Push the talk switch and say [Change name], or turn the “AUDIO CONTROL” knob until [Change Name] is displayed and push the knob.

[Change name. Push the talk switch and say the phone name to change.] is heard.

2. Follow voice guidance instructions, or turn the “AUDIO CONTROL” knob until the phone name that you want to change is displayed and push the knob.

When the phone is selected by a voice command:

[XXX (phone name) Push the talk switch and say confirm. Otherwise, say go back.] is heard and the phone name is displayed.

1. Follow voice guidance instructions, or turn the “AUDIO CONTROL” knob until [Confirm] is displayed and push the knob.

[Push the talk switch and say a new name.] is heard.

2. Follow voice guidance instructions, or turn the “AUDIO CONTROL” knob until [Record Name] is displayed, push the knob and say the desired phone name.

[XXX Push the talk switch and say confirm. Otherwise, say go back.] is heard.

3. Follow voice guidance instructions, or turn the “AUDIO CONTROL” knob until [Confirm] is displayed and push the knob.

[Name changed. Returning to the phone setup.] is heard and [Changed] is displayed.

When the phone is selected by using the knob:

[XXX Push the talk switch and say confirm. Otherwise, say go back.] is heard and the phone name is displayed.

1. Follow voice guidance instructions, or turn the “AUDIO CONTROL” knob until [Confirm] is displayed and push the knob.

[Push the talk switch and say a new name.] is heard.

2. Follow voice guidance instructions, or turn the “AUDIO CONTROL” knob until [Record Name] is displayed, push the knob and say the desired phone name.

[XXX Push the talk switch and say confirm. Otherwise, say go back.] is heard.

3. Follow voice guidance instructions, or turn the “AUDIO CONTROL” knob until [Confirm] is displayed and push the knob.

[Name changed. Returning to the phone setup.] is heard and [Changed] is displayed.

The system may not function in the following cases:

- If no phone has been registered.
- If the system does not recognize the voice command.

To list phones

1. Push the talk switch and say [List phones], or turn the “AUDIO CONTROL” knob until [List Phones] is displayed and push the knob.

[List phones. To select a name, push the talk switch during the name playback.] is heard.

2. Follow voice guidance instructions.

[Push the talk switch and say select phone, change name, or delete.] is heard.

Select one of the following:

Select phone

Push the talk switch and say [Select phone], or turn the “AUDIO CONTROL” knob until [Select Phone] is displayed and push the knob.

For further details on selecting a phone, see page 247.

Change name

Push the talk switch and say [Change name], or turn the “AUDIO CONTROL” knob until [Change Name] is displayed and push the knob.

For further details on changing a name, see page 247.

Delete

Push the talk switch and say [Delete], or turn the “AUDIO CONTROL” knob until [Delete] is displayed and push the knob.

For further details on deleting a phone, see page 250.

If no phone has been registered, the system may not function properly.

To set a passkey

1. Push the talk switch and say [Set passkey], or turn the “AUDIO CONTROL” knob until [Set Passkey] is displayed and push the knob.

[Set Passkey. The passkey is required for the phone pairing process. Push the talk switch and say a new passkey.] is heard and passkey is displayed.

2. Follow voice guidance instructions, or turn the “AUDIO CONTROL” knob to select a number.

When using a voice command:

[XXXX (new passkey) Push the talk switch and say confirm. Otherwise, continue adding numbers, or say go back or delete.] is heard and the new passkey is displayed.

Follow voice guidance instructions, or turn the “AUDIO CONTROL” knob until [Confirm] is displayed and push the knob.

[Passkey changed. Returning to the phone setup.] is heard.

When using the knob:

1. Turn the “AUDIO CONTROL” knob to select a number. Push the “AUDIO CONTROL” knob to set.
2. When the passkey is set, push the “AUDIO CONTROL” knob.

[Passkey changed. Returning to the phone setup.] is heard.

The system does not function in the following cases:

- If the passkey has less than 4 digits.
- If the passkey has more than 8 digits.

To delete a phone

1. Push the talk switch and say [Delete], or turn the “AUDIO CONTROL” knob until [Delete] is displayed and push the knob.

[Delete. Push the talk switch and say the phone name to delete.] is heard.

2. Follow voice guidance instructions, or turn the “AUDIO CONTROL” knob until the phone name you want to delete is displayed and push the knob.

When using a voice command:

[XXX (desired phone name) Push the talk switch and say confirm. Otherwise, say go back.] is heard and the phone name is displayed.

Follow voice guidance instructions, or turn the “AUDIO CONTROL” knob until [Confirm] is displayed and push the knob.

[Deleted. Returning to the phone setup.] is heard and [Deleted] is displayed.

When using the knob:

[Deleted. Returning to the phone setup.] is heard and [Deleted] is displayed.

The system may not function in the following cases:

- If no phone has been registered.
- If the system does not recognize the voice command.

—Security

The security menu includes the following:

- **Set PIN (Personal Identification Number)**

The PIN can be set or changed.

- **Phone book lock**

The phone book can be locked.

When the phone book is locked, the following functions cannot be used:

- Dial by name
- Redial
- Callback
- Speed Dial
- Phone Book
- **Phone book unlock**

The locked phone book can be unlocked.

To enter the security menu

1. Push the off–hook switch to turn the hands–free system on.
2. Follow voice guidance instructions, or turn the “AUDIO CONTROL” knob until [Setup] is displayed and push the knob.

[Setup. Please push the talk switch and say security, or phone setup.] is heard.

3. Follow voice guidance instructions, or turn the “AUDIO CONTROL” knob until [Security] is displayed and push the knob.

[Security. Push the talk switch and say set PIN, phone book lock, or phone book unlock.] is heard.

To set a PIN

Push the talk switch and say [Set PIN], or turn the “AUDIO CONTROL” knob until [Set PIN] is displayed and push the knob.

[There is no PIN number set. Please register a PIN number. Please push the talk switch and say a four–digit PIN number.] is heard.

When using a voice command:

1. Push the talk switch and say a new PIN number.
2. Follow voice guidance instructions, or turn the “AUDIO CONTROL” knob until [Confirm] is displayed and push the knob.

[The PIN number has been set. Returning to the security.] is heard and [Completed] is displayed.

When using the knob:

1. Turn the “AUDIO CONTROL” knob to select a number. Push the “AUDIO CONTROL” knob to set.
2. Repeat the above procedure until the entire four–digit number is set.
3. When the PIN is set, push the “AUDIO CONTROL” knob.
4. Follow voice guidance instructions, or turn the “AUDIO CONTROL” knob until [Confirm] is displayed and push the knob.

[The PIN number has been set. Returning to the security.] is heard and [Completed] is displayed.

If the PIN is to be changed:

[There is a PIN number in place. Push the talk switch and say the correct PIN number.] is heard and [Current PIN?] is displayed.

1. Follow voice guidance instructions, or use the “AUDIO CONTROL” knob to input the current PIN number.

[Please push the talk switch and say a four–digit PIN number.] is heard.

2. Push the talk switch and say new PIN number.

[The PIN number has been set. Returning to the security.] is heard and [Completed] is displayed.

If the current number is not correct, the system does not function properly.

INFORMATION
Do not forget your PIN. If you forget the PIN, initialization will be necessary. For details about initialization, see page 254.

To lock the phone book

1. Push the talk switch and say [Phone book lock], or turn the “AUDIO CONTROL” knob until [Phbk Lock] is displayed and push the knob.

[There is a PIN number in place. Push the talk switch and say the correct PIN number.] is heard and [Current PIN?] is displayed.

2. Follow voice guidance instructions, or turn the “AUDIO CONTROL” knob to select a number.

When using a voice command:

[XXXX (PIN number) Push the talk switch and say confirm. Otherwise, say go back.] is heard and PIN number is displayed.

Follow voice guidance instructions, or turn the “AUDIO CONTROL” knob until [Confirm] is displayed and push the knob.

[PIN number accepted. The phone book is now locked. Returning to the main menu.] is heard and [Locked] is displayed.

When using the knob:

1. Turn the “AUDIO CONTROL” knob to select a number. Push the “AUDIO CONTROL” knob to set.
2. When the PIN number is set, push the “AUDIO CONTROL” knob.

[XXXX Push the talk switch and say confirm. Otherwise, say go back.] is heard and PIN number is displayed.

3. Follow voice guidance instructions, or turn the “AUDIO CONTROL” knob until [Confirm] is displayed and push the knob.

[PIN number accepted. The phone book is now locked. Returning to the main menu.] is heard and [Locked] is displayed.

The system may not function in the following cases:

- If the current number is not correct.
- If the phone book has already been locked.
- If the PIN number does not exist.

To unlock the phone book

1. Push the talk switch and say [Phone book unlock], or turn the “AUDIO CONTROL” knob until [Phbk Unlock] is displayed and push the knob.

[Phonebook unlock. There is a PIN number in place. Push the talk switch and say the correct PIN number.] is heard and [Current PIN?] is displayed.

2. Follow voice guidance instructions, or turn the “AUDIO CONTROL” knob to select a number.

When using a voice command:

[XXXX (PIN number) Push the talk switch and say confirm. Otherwise, say go back.] is heard and the PIN number is displayed.

Follow voice guidance instructions, or turn the “AUDIO CONTROL” knob until [Confirm] is displayed and push the knob.

[PIN number accepted. The phone book is now unlocked. Returning to the main menu.] is heard and [Unlocked] is displayed.

When using the knob:

1. Turn the “AUDIO CONTROL” knob to select a number. Push the “AUDIO CONTROL” knob to set.
2. When the PIN number is set, push the “AUDIO CONTROL” knob.

[XXXX Push the talk switch and say confirm. Otherwise, say go back.] is heard and the PIN number is displayed.

3. Follow voice guidance instructions, or turn the “AUDIO CONTROL” knob until [Confirm] is displayed and push the knob.

[PIN number accepted. The phone book is now unlocked. Returning to the main menu.] is heard and [Unlocked] is displayed.

The system may not function in the following cases:

- If the current number is not correct.
- If the phone book has already been unlocked.

INFORMATION

A shortcut to each of the following functions is available. Enter the phone book menu, push the off–hook switch, and say either of the following:

- ***Phone book lock***
- ***Phone book unlock***

—System Setup

The system setup menu includes the following:

- Adjust Guidance Volume
- Initialize

To enter the system setup menu

1. Push the off–hook switch to turn the hands–free system on.
2. Follow voice guidance instructions, or turn the “AUDIO CONTROL” knob until [Setup] is displayed and push the knob.
3. Turn the “AUDIO CONTROL” knob until [System Setup] is displayed and push the knob.

[System setup. Please select guidance volume or initialize.] is heard.

To adjust the guidance volume

1. Turn the “AUDIO CONTROL” knob until [Guidance Vol] is displayed and push the knob.

[Guidance will be at this volume] is heard and the present volume level is displayed.

2. Turn the “AUDIO CONTROL” knob to adjust the volume and push the knob.

To initialize

1. Turn the “AUDIO CONTROL” knob until [Initialize] is displayed and push the knob.

[System initialization. This will erase all user information in the hands free system; including paired phones, phone book entries, and call history. Select confirm to initialize. Otherwise, select go back.] is heard.

2. Turn the “AUDIO CONTROL” knob until [Confirm] is displayed and push the knob.

[System initialization. This will erase all user information in the hands free system; including paired phones, phone book entries, and call history. Select confirm to initialize. Otherwise, select go back.] is heard.

3. Turn the “AUDIO CONTROL” knob until [Confirm] is displayed and push the knob.

[Initialized. Returning to the main menu.] is heard.

—Phone Book

The phone book menu includes the following:

- Add Entry

Phone numbers and voice tags can be registered.

- Change Name

The registered names can be changed.

- Delete Entry

The registered names can be deleted.

- Delete Speed Dial

The registered speed dial can be deleted.

- List Names

The registered names can be checked.

- Set Speed Dial

Speed dials can be set.

Up to 20 numbers can be registered in the phone book.

To enter the phone book menu

1. Push the off–hook switch to turn the hands–free system on.
2. Follow voice guidance instructions, or turn the “AUDIO CONTROL” knob until [Phonebook] is displayed and push the knob.

[Phone book. Please push the talk switch and say add entry, change name, delete entry, list names, set speed dial or delete speed dial.] is heard.

If the phone book is locked, the system may not function properly.

To add entry

The add entry includes the following:

(a) By Voice

(b) By Phone

(c) Call History

(d) Manual Input

Push the talk switch and say [Add entry], or turn the “AUDIO CONTROL” knob until [Add Entry] is displayed and push the knob.

[Add Entry. How will the number be entered. Push the talk switch and say by voice, by phone, or call history.] is heard.

(a) By Voice

1. Push the talk switch and say [By voice], or turn the “AUDIO CONTROL” knob until [By Voice] is displayed and push the knob.

[Voice entry. Push the talk switch and say the number.] is heard.

2. Push the talk switch and say the dial number that you want to register.

[To store, push the talk switch and say confirm. Otherwise, continue adding numbers, or say go back, or delete.] is heard and number is displayed.

3. Follow voice guidance instructions.

If [Confirm] is said, then input a voice tag.

[Push the talk switch and say a name.] is heard.

1. Push the talk switch and say the name of the dial number that you want to register.

[XXXX (phone number) Push the talk switch and say confirm. Otherwise, say go back.] is heard.

2. Follow voice guidance instructions, or turn the “AUDIO CONTROL” knob until [Confirm] is displayed and push the knob.

[Stored. To register this as a speed dial entry, push the talk switch and say set speed dial. Otherwise, say confirm.] is heard and [Stored] is displayed.

3. Select one of the following:

- **Confirm**
- **Speed Dial**

Confirm

Push the talk switch and say [Confirm], or turn the “AUDIO CONTROL” knob until [Confirm] is displayed and push the knob.

[Returning to the phone book.] is heard.

Speed Dial

1. Push the talk switch and say [Set speed dial], or turn the “AUDIO CONTROL” knob until [Speed Dial] is displayed and push the knob.

[Set speed dial. Push the preset button to assign to XXXX] is heard.

2. Push and hold the desired preset button.

[preset... is now assigned. Returning to the phone book.] is heard.

The system may not function in the following cases:

- If the phone book is full.
- If the dial number has more than 24 digits.

(b) By Phone

1. Push the talk switch and say [By phone], or turn the “AUDIO CONTROL” knob until [By Phone] is displayed and push the knob.

[Phone entry. Prepare to send the information from the phone. When ready, push the talk switch and say confirm.] is heard.

2. Follow voice guidance instructions, or turn the “AUDIO CONTROL” knob until [Confirm] is displayed and push the knob.

[Send the information at this time.] is heard.

After the system has received the name and phone number, [Push the talk switch and say confirm. To select an alternate number, say next or previous. Otherwise, say go back.] is heard and the name and phone number are displayed.

3. Follow voice guidance instructions, push the talk switch and say [Confirm], or turn the “AUDIO CONTROL” knob until the dial number that you want to register is displayed and push the knob.

Next, input a voice tag.

For further details, see page 255.

(c) Call History

1. Push the talk switch and say [Call history], or turn the “AUDIO CONTROL” knob until [Call History] is displayed and push the knob.

[Call history. Push the talk switch and say incoming or outgoing.] is heard and [Call History] is displayed.

2. Select one of the following:

- **Incoming**
- **Outgoing**

Incoming

1. Push the talk switch and say [Incoming], or turn the “AUDIO CONTROL” knob until [Incoming] is displayed and push the knob.

[Most recent incoming call was XXXX (phone number)] is heard and the incoming number is displayed.

[Push the talk switch and say confirm. Otherwise, say previous, or go back.] is heard.

2. Follow voice guidance instructions, or turn the “AUDIO CONTROL” knob until the dial number that you want to register is displayed and push the knob.

Next, input a voice tag.

For further details, see page 255.

Outgoing

1. Push the talk switch and say [Outgoing], or turn the “AUDIO CONTROL” knob until [Outgoing] is displayed and push the knob.

[Most recent outgoing call was XXXX] is heard and the outgoing number is displayed.

[Push the talk switch and say confirm. Otherwise, say previous, or go back.] is heard.

2. Follow voice guidance instructions, or turn the “AUDIO CONTROL” knob until the dial number that you want to register is displayed and push the knob.

Next, input a voice tag.

For further details, see page 255.

(d) Manual Input

1. Turn the “AUDIO CONTROL” knob until [Manual Input] is displayed and push the knob.
2. Turn the “AUDIO CONTROL” knob to select a number. Push the “AUDIO CONTROL” knob to set.
3. When the number is set, push the “AUDIO CONTROL” knob.

Next, input a voice tag.

For further details, see page 255.

INFORMATION

- ***The system can recognize single digits from zero to nine, #(pound), *(star), and +(plus). Numbers that are ten or greater are not recognized.***
- ***To speed up input, it is a good idea to group all digits into a continuous string. However, you can enter each digit individually or group digits together in preferred string lengths.***

The display corresponding to each operation appears on the screen as follows:

Input operation—

You say: [Nine, nine, five]

Voice output: [995 to store push the talk switch and say confirm. Otherwise, continue adding numbers, or say go back, or delete.]

Display: [995]

You say: [Seven, three, four]

Voice output: [734 to store push the talk switch and say confirm. Otherwise, continue adding numbers, or say go back, or delete.]

Display: [995734]

Repeat the above procedure until the entire number that you want to register is input.

Go back operation—

You say: [Go back]

Voice output: [Go back. The last numbers said have been removed. Push the talk switch and say the number.]

Display: [995]

Repeating the above operation deletes the last digits in reverse order of input.

Delete operation—

You say: [Delete]

Voice output: [Deleted. Push the talk switch and say the number.]

Display: [Delete]

The display will return to the initial screen that allows a number to be input.

To list names

The voice tags can be edited during the name playback.

1. Push the talk switch and say [List names], or turn the “AUDIO CONTROL” knob until [List Names] is displayed and push the knob.

[List names. To select a name, push the talk switch during the name playback.] is heard.

2. Follow voice guidance instructions.

[XXXX selected.] is heard and [Selected] is displayed.

If you push the off–hook switch during the name playback, you can dial the number of the selected name.

Editing the voice tags

The following can be performed:

- **Dial**
- **Change Name**
- **Delete Entry**
- **Speed Dial**

[Push the talk switch and say dial, change name, delete entry, or set speed dial.] is heard and [Selected] is displayed.

Dial

Push the talk switch and say [Dial], or turn the “AUDIO CONTROL” knob until [Dial] is displayed and push the knob.

Change Name

Push the talk switch and say [Change name], or turn the “AUDIO CONTROL” knob until [Change Name] is displayed and push the knob.

For further details, see page 260.

Delete Entry

Push the talk switch and say [Delete entry], or turn the “AUDIO CONTROL” knob until [Delete Entry] is displayed and push the knob.

For further details, see page 259.

Speed dial

Push the talk switch and say [Set speed dial], or turn the “AUDIO CONTROL” knob until [Speed Dial] is displayed and push the knob.

For further details, see page 261.

To delete entry

1. Push the talk switch and say [Delete entry], or turn the “AUDIO CONTROL” knob until [Delete Entry] is displayed and push the knob.

[Delete entry. Push the talk switch and say the name to delete.] is heard.

2. Follow voice guidance instructions, or turn the “AUDIO CONTROL” knob until the name that you want to delete is displayed and push the knob.

When using a voice command:

[XXXX (name) Push the talk switch and say confirm. Otherwise, say go back.] is heard and the name is displayed.

Follow voice guidance instructions, or turn the “AUDIO CONTROL” knob until [Confirm] is displayed and push the knob.

[Deleted. Returning to the phone book.] is heard and [Deleted] is displayed.

When using the knob:

[Deleted. Returning to the phone book.] is heard and [Deleted] is displayed.

The system may not function in the following cases:

- If no name has been registered.
- If the system does not recognize the voice command.

To delete speed dial

1. Push the talk switch and say [Delete speed dial], or turn the “AUDIO CONTROL” knob until [Del Spd Dial] is displayed and push the knob.

[Delete speed dial. Push the preset button to delete from speed dial.] is heard.

2. Select the preset button that you want to delete.

[To delete preset... push the talk switch and say confirm. Otherwise, say go back.] is heard.

3. Follow voice guidance instructions, or turn the “AUDIO CONTROL” knob until [Confirm] is displayed and push the knob.

[Deleted.] is heard and [Deleted] is displayed.

[Returning to the phone book.] is heard.

The system may not function in the following cases:

- If no speed dial has been registered.
- If the preset button has not been assigned.

To change name

1. Push the talk switch and say [Change name], or turn the “AUDIO CONTROL” knob until [Change Name] is displayed and push the knob.

[Change name. Push the talk switch and say the name to change.] is heard.

2. Follow voice guidance instructions, or turn the “AUDIO CONTROL” knob until the dial number that you want to change is displayed and push the knob.

When using a voice command:

[XXXX (phone number) Push the talk switch and say confirm. Otherwise, say go back.] is heard and the phone number is displayed.

1. Follow voice guidance instructions, or turn the “AUDIO CONTROL” knob until [Confirm] is displayed and push the knob.

[Push the talk switch and say a new name.] is heard.

2. Follow voice guidance instructions, or turn the “AUDIO CONTROL” knob until [Record Name] is displayed, push the knob and say new name.

[XXXX Push the talk switch and say confirm. Otherwise, say go back.] is heard.

3. Follow voice guidance instructions, or turn the “AUDIO CONTROL” knob until [Confirm] is displayed and push the knob.

[Name changed. Returning to the phone book.] is heard and [Changed] is displayed.

When using the knob:

[Push the talk switch and say a new name.] is heard.

1. Follow voice guidance instructions, or turn the “AUDIO CONTROL” knob until [Record Name] is displayed, push the knob and say new name.

[XXXX Push the talk switch and say confirm. Otherwise, say go back.] is heard.

2. Follow voice guidance instructions, or turn the “AUDIO CONTROL” knob until [Confirm] is displayed and push the knob.

[Name changed. Returning to the phone book.] is heard and [Changed] is displayed.

The system may not function in the following cases:

- If no name has been registered.
- If the system does not recognize the voice command.

To set speed dial

1. Push the talk switch and say [Set Speed dial], or turn the “AUDIO CONTROL” knob until [Speed Dial] is displayed and push the knob.

[Set speed dial. Push the talk switch and say a name.] is heard.

2. Follow voice guidance instructions, or turn the “AUDIO CONTROL” knob until the dial number that you want to register is displayed and push the knob.

When using a voice command:

[XXXX (phone number) To register this as a speed dial entry, push the talk switch and say confirm. Otherwise, say go back.] is heard and the phone number is displayed.

1. Follow voice guidance instructions, or turn the “AUDIO CONTROL” knob until [Confirm] is displayed and push the knob.

[Push the preset button to assign to XXXX] is heard.

2. Push and hold the desired preset button.

[preset... is now assigned. Returning to the phone book.] is heard.

When using the knob:

[Push the preset button to assign to XXXX] is heard.

Push and hold the desired preset button.

[preset... is now assigned. Returning to the phone book.] is heard.

The system may not function in the following cases:

- If no name has been registered.
- If the system does not recognize the voice command.

INFORMATION
A shortcut to each of the following functions is available. Push the off–hook switch and talk switch, and say one of the following:
• Phone book add entry
• Phone book change name
• Phone book delete entry
• Phone book delete speed dial
• Phone book list names
• Phone book set speed dial

—Redial

The following can be performed:

- Dial
- Delete
- Store

To enter the redial

1. Push the off–hook switch to turn the hands–free system on.
2. Follow voice guidance instructions, or turn the “AUDIO CONTROL” knob until [Redial] is displayed and push the knob.

[Redial. Most recent outgoing call was XXXX (phone number)] is heard and outgoing history is displayed.

[Please push the off–hook switch to dial. Otherwise, push the talk switch and say dial, previous, go back, store, or delete.] is heard.

Dial

Turn the “AUDIO CONTROL” knob until the number that you want to dial is displayed and push the knob. After that, do the one of the following:

- Push the off–hook switch.
- Push the talk switch and say [dial].
- Turn the “AUDIO CONTROL” knob until [Dial] is displayed and push the knob.

Delete

1. Turn the “AUDIO CONTROL” knob until the dial number that you want to delete is displayed and push the knob.
2. Push the talk switch and say [Delete], or turn the “AUDIO CONTROL” knob until [Delete] is displayed and push the knob.

[Delete. Push the talk switch and say confirm. Otherwise, say go back] is heard.

3. Follow voice guidance instructions, or turn the “AUDIO CONTROL” knob until [Confirm] is displayed and push the knob.

[Deleted.] is heard.

Store

1. Turn the “AUDIO CONTROL” knob until the dial number that you want to register is displayed and push the knob.
2. Push the talk switch and say [Store], or turn the “AUDIO CONTROL” knob until [Store] is displayed and push the knob.

[Store. Push the talk switch and say confirm. Otherwise, say go back.] is heard.

3. Follow voice guidance instructions, or turn the “AUDIO CONTROL” knob until [Confirm] is displayed and push the knob.

Next, input a voice tag.

For further details, see page 255.

The system may not function in the following cases:

- If there is no outgoing history.
- If the phone book is locked.

INFORMATION

- ***Up to five outgoing calls can be stored in the system.***
- ***When five outgoing calls are stored in memory, the oldest outgoing call is deleted to make room in memory for new calls.***
- ***Only the latest outgoing call is stored when the same telephone number is dialed.***
- ***A shortcut to “Redial” is available. Push the off–hook switch and then push the off–hook switch.***

—Callback

The following can be performed:

- Dial
- Delete
- Store

To enter the callback

1. Push the off–hook switch to turn the hands–free system on.
2. Follow voice guidance instructions, or turn the “AUDIO CONTROL” knob until [Callback] is displayed and push the knob.

[Callback. Most recent incoming call was XXXX (phone number)] is heard and incoming history is displayed.

[Please push the off–hook switch to dial. Otherwise, push the talk switch and say dial, previous, go back, store, or delete.] is heard.

Dial

Turn the “AUDIO CONTROL” knob until the number that you want to dial is displayed and push the knob. After that, do the one of the following:

- Push the off–hook switch.
- Push the talk switch and say [Dial].
- Turn the “AUDIO CONTROL” knob until [Dial] is displayed and push the knob.

Delete

1. Turn the “AUDIO CONTROL” knob until the dial number that you want to delete is displayed and push the knob.
2. Push the talk switch and say [Delete], or turn the “AUDIO CONTROL” knob until [Delete] is displayed and push the knob.

[Delete. Push the talk switch and say confirm. Otherwise, say go back] is heard.

3. Follow voice guidance instructions, or turn the “AUDIO CONTROL” knob until [Confirm] is displayed and push the knob.

[Deleted.] is heard.

Store

1. Turn the “AUDIO CONTROL” knob until the dial number that you want to register is displayed and push the knob.
2. Push the talk switch and say [Store], or turn the “AUDIO CONTROL” knob until [Store] is displayed and push the knob.

[Store. Push the talk switch and say confirm. Otherwise, say go back.] is heard.

3. Follow voice guidance instructions, or turn the “AUDIO CONTROL” knob until [Confirm] is displayed and push the knob.

Next, input a voice tag.

For further details, see page 255.

The system may not function in the following cases:

- If there is no incoming history.
- If the phone book is locked.

INFORMATION

- ***Up to five incoming calls can be stored in the system.***
- ***When five incoming calls are stored in memory, the oldest incoming call is deleted to make room in memory for new calls.***

—Making a phone call

If the cellular phone is not registered, this system cannot be used. See page 245 for registering a cellular phone. Make sure that [BT] is displayed and get the cellular phone ready to use.

There are 3 ways to make a phone call with this system.

- **Speed dial**

A phone call can be made with a preset button in which a phone number is registered. See page 261 for setting the preset buttons.

- **Dial by Name**

The system dials the numbers corresponding to the spoken names registered in the system.

- **Dial by Number**

The system dials to the spoken numbers.

To make a phone call

Push the off–hook switch to turn the hands–free system on.

To speed dial

1. Push the preset button where the desired number is set. The name or telephone number is displayed.
2. Push the off–hook switch to dial.

To dial by Name

1. Push the talk switch and say [Dial by name].

[Dial by name. Please push the talk switch and say the stored name, or say list names.] is heard and [Dial by Name] is displayed.

2. Push the talk switch and say the phone name, or turn the “AUDIO CONTROL” knob until the name that you want to dial is displayed and push the knob.

When using a voice command:

[XXXX (phone number) Push the off–hook switch to dial. Otherwise, push the talk switch and say dial, or go back.] is heard. After that, do the one of the following:

- Push the off–hook switch.
- Push the talk switch and say [Dial].
- Turn the “AUDIO CONTROL” knob until [Dial] is displayed and push the knob.

When using the knob:

It calls the number.

The system may not function in the following cases:

- If there is no number registered in the preset button.
- If the system does not recognize the voice command.

INFORMATION

- ***The phone numbers registered in the phone book can be retrieved.***
- ***The system does not recognize that the voice tag is not registered in the registered cellular phone. For details about voice tags, see “To add entry” on page 255.***
- ***A shortcut to [Dial by name] is available. Push the talk switch and say [Dial XXX (name you want to dial)].***

To dial by Number

1. Push the talk switch and say [Dial by Number].

[Dial by number. Please push the talk switch and say the number.] is heard and [Dial by Num] is displayed.

2. Push talk switch and say the dial number.

[Push the off–hook switch to dial. Otherwise, push the talk switch and say dial, go back, or delete.] is heard.

To dial the number, do the one of the following:

- Push the off–hook switch.
- Push the talk switch and say [Dial].
- Turn the “AUDIO CONTROL” knob until [Dial] is displayed and push the knob.

If the number exceeds 24 digits, the system may not function properly.

INFORMATION

- ***The system can recognize single digits from zero to nine, #(pound), *(star), and +(plus). Numbers that are ten or greater are not recognized.***
- ***To speed up input, it is a good idea to group all digits into a continuous string. However, you can enter each digit individually or group digits together in preferred string lengths.***

The display corresponding to each operation appears on the screen as follows:

Input operation—

You say: [Nine, nine, five]

Voice output: [995 push the off–hook switch to dial. Otherwise, push the talk switch and say dial, go back, or delete.]

Display: [995]

You say: [Seven, three, four]

Voice output: [734 push the off–hook switch to dial. Otherwise, push the talk switch and say dial, go back, or delete.]

Display: [995734]

Repeat the above procedure until the entire number that you want to dial is input.

Go back operation—

You say: [Go back]

Voice output: [Go back, the last numbers entered have been removed. Push the talk switch and continue adding numbers otherwise say dial, go back, or delete.]

Display: [995]

Repeating the above operation deletes the last digits in reverse order of input.

Delete operation—

You say: [Delete]

Voice output: [Deleted. The entire number to dial has been deleted. Please push the talk switch and say the number.]

Display: [Dial by Num]

The display will return to the initial screen that allows a number to be input.

Cancel operation—

Do either one of the following:

- ***Push the on–hook switch at anytime during the operation.***
- ***Push the talk switch and say [Cancel] after the beep at anytime during the operation except while a call is connected.***

—Receiving a phone call

When receiving a phone call, a ring tone is audible and the system changes into the telephone mode.

When receiving a phone call, the display is as follows. The display differs depending on whether or not the vehicle is in motion.

When the vehicle is stopped:
Number, name, or [Incoming] is displayed.

When the vehicle is in motion:
[Incoming] is displayed.

Do either one of the following:

- Pushing the off–hook switch allows you to talk on the phone.
- Pushing the on–hook switch refuses the call.

To adjust the ring volume, push “+” or “–” on the steering volume controls. Volume adjustment cannot be done using the audio system.

Repeatedly pushing “–” on the steering volume controls mutes the ring.

When receiving an international phone call, the name of the party may not be displayed correctly depending on the cellular phone.

To transfer a call to the phone:

The received call can be transferred from the hands–free system to the cellular phone that is connected to Bluetooth®. For details, refer to the user’s guide for the cellular phone.

—Talking on the phone

While talking on the phone, the display is as follows. The display differs depending on whether or not the vehicle is in motion.

When the vehicle is stopped:
Number is displayed.

When the vehicle is in motion:
[Talking] is displayed.

When the call is finished, push the on–hook switch.

In the following situations, your voice may not reach the party.

- Talk alternately with the other party on the phone. If you talk at the same time, the voice may not reach each other. (It is not a malfunction.)
- Keep the volume of receiving voice down. Otherwise, echo is coming up. When you talk on the phone, speak clearly towards the microphone.
- When driving on a rough road.
- When driving at high speeds.
- When the window is open.
- When the air conditioning vents face the microphone.
- When the sound of the air conditioning fan is loud.

The microphone can be muted by pushing the talk switch and say [Mute].

To transfer a call from the phone:

Pushing the off–hook switch while talking on the cellular phone that is connected to Bluetooth® allows you to talk hands–free.

A call can also be transferred by pushing the talk switch and say [Call transfer].

To transfer a call to the phone:

The call can be transferred from the hands–free system to the phone that is connected to Bluetooth®. For details, refer to the user’s guide for the cellular phone.

SECTION 1 – 9

OPERATION OF INSTRUMENTS AND CONTROLS

Air conditioning system

Manual air conditioning system
Controls 270
Air flow selector settings 273
Operating tips 273
Automatic air conditioning system
Controls 276
Air flow selector settings 280
Operating tips 280
Side vents 283
Air conditioning filter 284

Manual air conditioning system——Controls

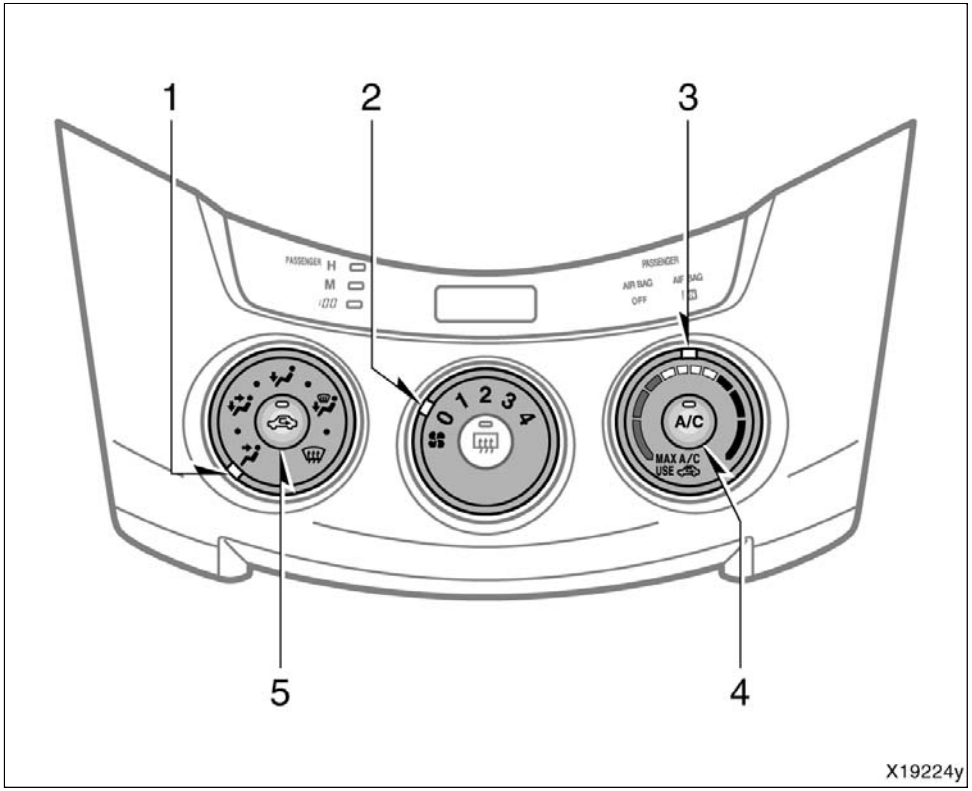

1. Air flow selector
2. Fan speed selector
3. Temperature selector
4. “A/C” button
5. Air intake selector

Fan speed selector

Turn the dial to adjust the fan speed—to the right to increase, to the left to decrease.

Temperature selector

Turn the dial to adjust the temperature—to the right to warm, to the left to cool.

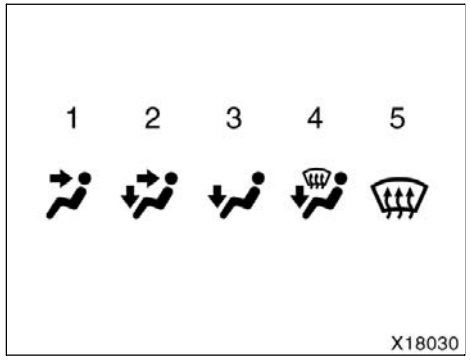

Air flow selector

Turn the dial to select the vents used for air flow.

1. **Panel—**Air flows mainly from the instrument panel vents.
2. **Bi-level—**Air flows from both the floor vents and the instrument panel vents.
3. **Floor—**Air flows mainly from the floor vents.
4. **Floor/Windshield—**Air flows mainly from the floor vents and windshield vents.

   Turning the air flow selector to the floor/windshield position turns on the defogging function with the purpose of clearing the front view.

   In this position, air intake selector mode changes to FRESH automatically to clean up the front view quickly. It is not possible to return to RECIRCULATE in this position.

   Press the “A/C” button for dehumidified heating or cooling. This setting clears the front view more quickly.
5. **Windshield—**Air flows mainly from the windshield vents.

   Turning the air flow selector to the windshield position turns on the defogging function with the purpose of clearing the front view.

   In this position, air intake selector mode changes to FRESH automatically to clean up the front view quickly. It is not possible to return to RECIRCULATE in this position.

   Press the “A/C” button for dehumidified heating or cooling. This setting clears the front view more quickly.

For details about air flow selector settings, see “—Air flow selector settings” on page 273.

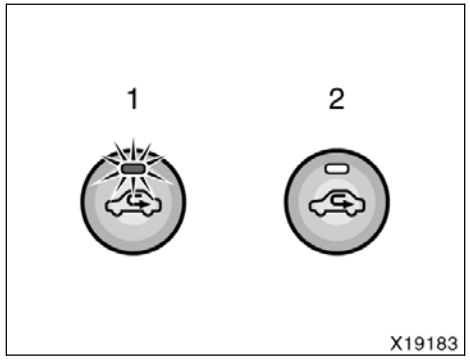

Air intake selector

Press the button to select the air source.

1. **RECIRCULATE—**Recirculates the air inside the vehicle.
2. **FRESH—**Draws outside air into the system.

To prevent fogging up of the windshield, the air intake mode may change automatically to FRESH depending on the condition of the air conditioning system.

“A/C” button

To turn on the air conditioning, press the “A/C” button. The “A/C” button indicator will come on. To turn the air conditioning off, press the button again.

—Air flow selector settings

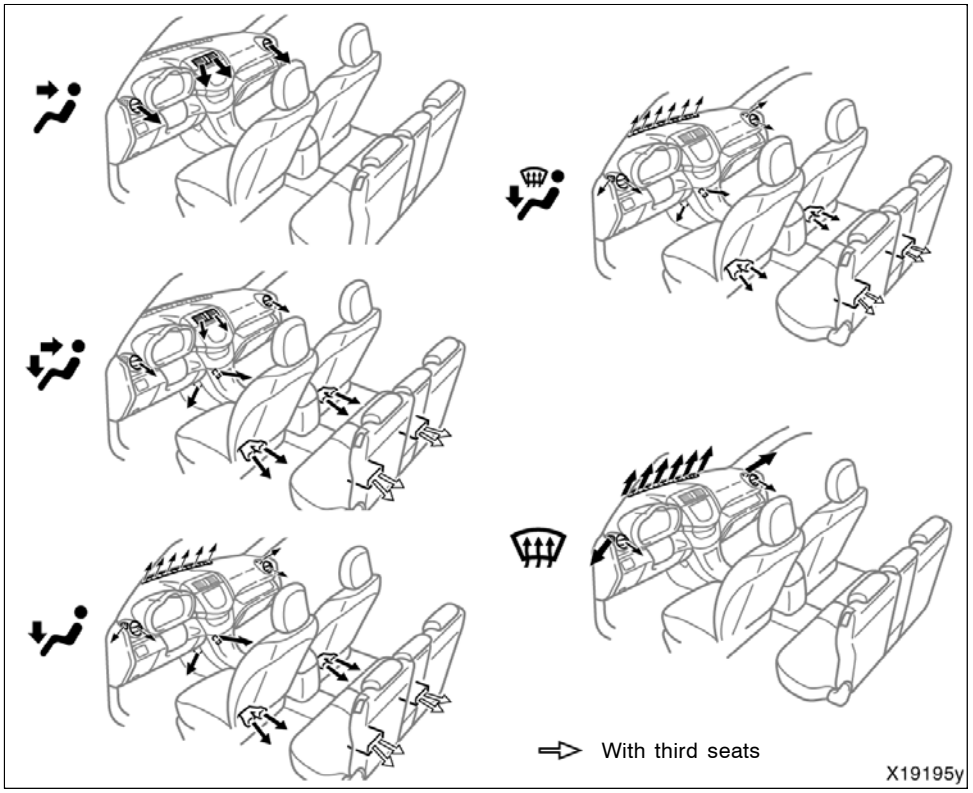

—Operating tips

- To cool off your Toyota after it has been parked in the hot sun, drive with the windows open for a few minutes. This vents the hot air, allowing the air conditioning to cool the interior more quickly.
- Make sure the air intake grilles in front of the windshield are not blocked (by leaves or snow, for example).
- Keep the area under the front (and second) seats clear to allow air to circulate throughout the vehicle.
- On cold days, set the fan speed to high for a minute to help clear the intake ducts of snow or moisture. This can reduce the amount of fogging on the windows.
- When driving on dusty roads, close all windows. If dust thrown up by the vehicle is still drawn into the vehicle after closing the windows, it is recommended that the air intake selector be set to FRESH and the fan speed selector to any setting except “0”.

- If following another vehicle on a dusty road, or driving in windy and dusty conditions, it is recommended that the air intake selector be temporarily set to RECIRCULATE, which will close off the outside passage and prevent outside air and dust from entering the vehicle interior.

CAUTION

To prevent the windshield from fogging up, do not use the windshield air flow button during cool air operation in extremely humid weather. The difference between the temperature of the outside air and that of the windshield can cause the outer surface of the windshield to fog up, blocking your vision.

NOTICE

To prevent battery discharge, do not leave the air conditioning system on longer than necessary when the engine is stopped.

Heating

For best results, set controls to:

Fan speed—Any setting except “0”
Temperature—Towards **WARM** (red zone)
Air intake—FRESH (outside air)
Air flow—FLOOR
Air conditioning—OFF

- For quick heating, select recirculated air for a few minutes. To keep the windows from fogging, select fresh after the vehicle interior has been warmed.
- Press the “A/C” button on for dehumidified heating.
- Choose floor/windshield air flow to heat the vehicle interior while defrosting or defogging the windshield.

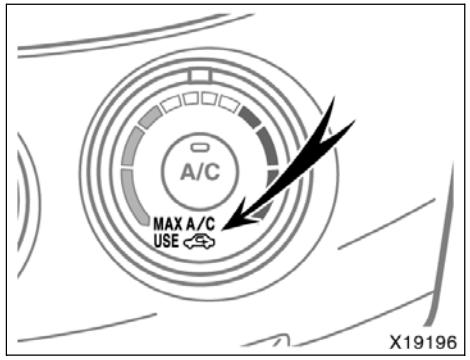

Air conditioning

For best results, set controls to:

Fan speed—Any setting except “0”
Temperature—Towards **COLD** (blue zone)
Air intake—FRESH (outside air)
Air flow—PANEL
Air conditioning—ON

- For quick cooling, turn the temperature selector dial fully towards COLD and change the air intake selector mode to RECIRCULATE.

Ventilation

For best results, set controls to:

Fan speed—Any setting except “0”
Temperature—Towards **COLD** (blue zone)
Air intake—FRESH (outside air)
Air flow—PANEL
Air conditioning—OFF

Defogging

The inside of the windshield

For best results, set controls to:

Fan speed—Any setting except “0”
Temperature—Towards **WARM** (red zone) to heat; **COLD** (blue zone) to cool
Air intake—FRESH (outside air)
Air flow—WINDSHIELD

Turning the air flow selector to the windshield or floor/windshield position turns on the defogging function with the purpose of clearing the front view.

When turning the air flow selector to windshield or floor/windshield position, air intake selector mode changes to FRESH automatically to clean up the front view quickly. It is not possible to return to RECIRCULATE in this position.

Press the “A/C” button for dehumidified heating or cooling. This setting clears the front view more quickly.

- On humid days, do not blow cold air on the windshield—the difference between the outside and inside temperatures could make the fogging worse.

Defrosting

The outside of the windshield

For best results, set controls to:

Fan speed—Any setting except “0”
Temperature—Towards **WARM** (red zone)
Air intake—FRESH (outside air)
Air flow—WINDSHIELD

Turning the air flow selector to the windshield or floor/windshield position turns on the defrosting function with the purpose of clearing the front view.

When turning the air flow selector to windshield or floor/windshield position, air intake selector mode changes to FRESH automatically to clean up the front view quickly. It is not possible to return to RECIRCULATE in this position.

Press the “A/C” button for dehumidified heating. This setting clears the front view more quickly.

- To heat the vehicle interior while defrosting the windshield, choose floor/windshield air flow.

Automatic air conditioning system——Controls

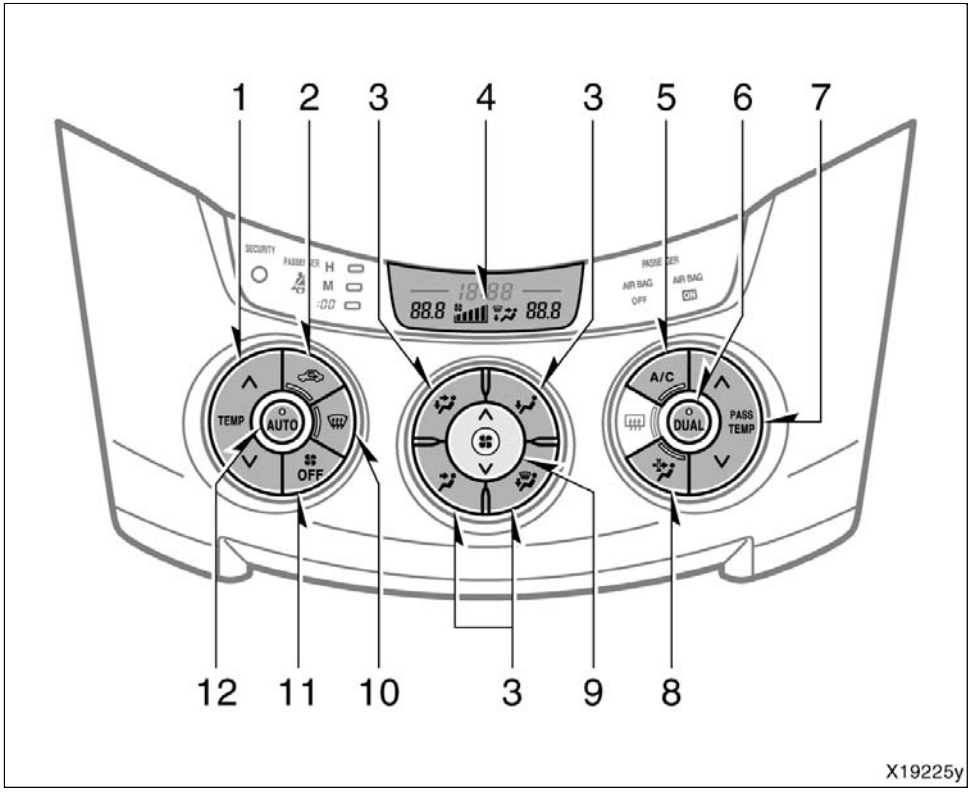

1. “TEMP” (driver side temperature control) button
2. Air intake selector
3. Air flow selector
4. Air conditioning display
5. “A/C” button
6. “DUAL” button
7. “PASS TEMP” (front passenger side temperature control) button
8. Micro dust and pollen filter button
9. Fan speed selector
10. Windshield air flow button
11. “OFF” button
12. “AUTO” button

“AUTO” button

For automatic operation of the air conditioning, push the “AUTO” button. An indicator light will illuminate to show that the automatic operation mode has been selected.

In the automatic operation mode, the air conditioning selects the most suitable fan speed, air flow, air intake and on–off of the air conditioning according to the temperature. As a result, the following may occur.

- The system may switch automatically to recirculated mode when the coolest temperature setting is selected in summer.
- Immediately after the switch is pressed, the fan may stop for a while until warm or cool air is ready to flow.
- Cool air may flow to the area around the upper body when the heater is on.

You may use manual controls if you want to select your own settings.

Fan speed selector

Push the “∧” (increase) or “∨” (decrease) side of the button to adjust the fan speed.

In automatic operation, you do not have to adjust the fan speed unless you desire another fan speed mode.

“DUAL” button

Push the button to change the mode of the temperature setting.

With the indicator on—Individual temperature setting
With the indicator off—Simultaneous temperature setting

“TEMP” (driver side temperature control) button

To increase the temperature, press the “∧” side. To decrease it, press the “∨” side.

“LO” appears when you adjust to maximum cooling, and “HI” appears when you adjust to maximum warming.

With the “DUAL” button indicator on—This button changes the temperature on the driver side only.

With the “DUAL” button indicator off—This button changes the temperature on the driver side and front passenger side simultaneously.

This function will be cancelled when the “PASS TEMP” button is pushed.

“PASS TEMP” (front passenger side temperature control) button

To increase the temperature, press the “∧” side. To decrease it, press the “∨” side.

“LO” appears when you adjust to maximum cooling, and “HI” appears when you adjust to maximum warming.

This button changes the temperature on the front passenger side only.

“OFF” button

Push the “OFF” button to turn off the air conditioning system.

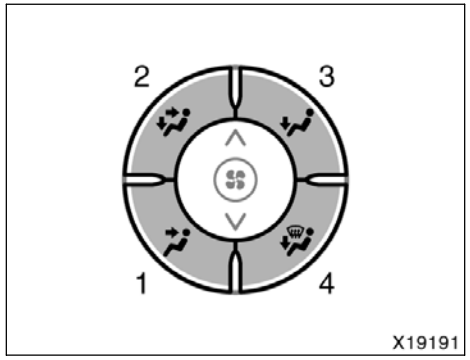

Air flow selector

Push one of the buttons to select the vents used for air flow.

In automatic operation, you do not have to select the air flow unless you desire another air flow mode.

1. **Panel—**Air flows mainly from the instrument panel vents.
2. **Bi–level—**Air flows from both the floor vents and the instrument panel vents.
3. **Floor—**Air flows mainly from the floor vents.
4. **Floor/Windshield—**Air flows mainly from the floor vents and windshield vents.

   This position allows the air intake to select FRESH automatically. This is to clean up the front view more quickly. It is not possible to return to RECIRCULATE in this position.

   Pushing this button turns on the defroster–linked air conditioning. This is to clean up the front view more quickly.

For details about air flow selector settings, see “—Air flow selector settings” on page 280.

Windshield air flow button

When this button is pressed, air flows mainly from the windshield vents and turns on the defogging function with the purpose of clearing the front view.

Pressing this button once again returns the air flow mode to the last one used.

In this position, the air intake selector mode changes to FRESH automatically to clean up the front view quickly. It is not possible to return to RECIRCULATE in this position.

Pressing the windshield air flow button turns on the defroster–linked air conditioning. This is to clean up the front view more quickly.

To turn off the air conditioning alone, press the “A/C” button once again.

When the “A/C” button is not pressed in, pressing another air flow button turns off the air conditioning.

For details about air flow selector settings, see “—Air flow selector settings” on page 280.

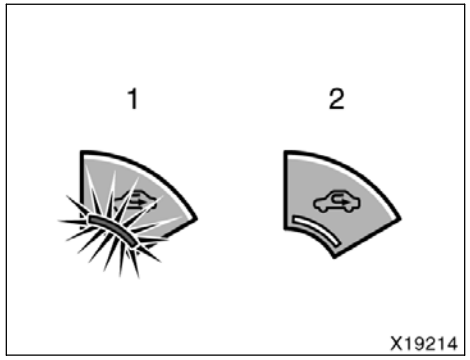

Air intake selector

Press the button to select the air source.

1. **RECIRCULATE** (indicator light is on)—Recirculates the air inside the vehicle.
2. **FRESH** (indicator light is off)—Draws outside air into the system.

To prevent fogging up of the windshield, the air intake mode may change automatically to FRESH depending on the condition of the air conditioning system.

“A/C” button

To turn on the air conditioning, press the “A/C” button. The “A/C” button indicator will come on. To turn the air conditioning off, press the button again.

Micro dust and pollen filter button

Push the button to remove the airborne pollen and micro dust from the cabin as soon as possible. An indicator will come on.

The air intake mode will switch to RECIRCULATE mode. The air will flow to the upper part of the body of the occupants and pollen and micro dust will be removed. After about 3 minutes have elapsed, the operation stops, and the air conditioning system automatically returns to the settings prior to the button being pushed.

To stop the operation, do one of the following:

- Press the micro dust and pollen filter button again.
- Press the “AUTO” button.
- Press one of the air flow selector buttons or the windshield air flow button.

When the ambient temperature is low, the following may occur:

- Air intake mode does not switch to RECIRCULATE.
- The air conditioning system operates automatically.
- The operation is cancelled after 1 minute.

In rainy weather, the windows may fog up. Press the windshield air flow button.

—Air flow selector settings

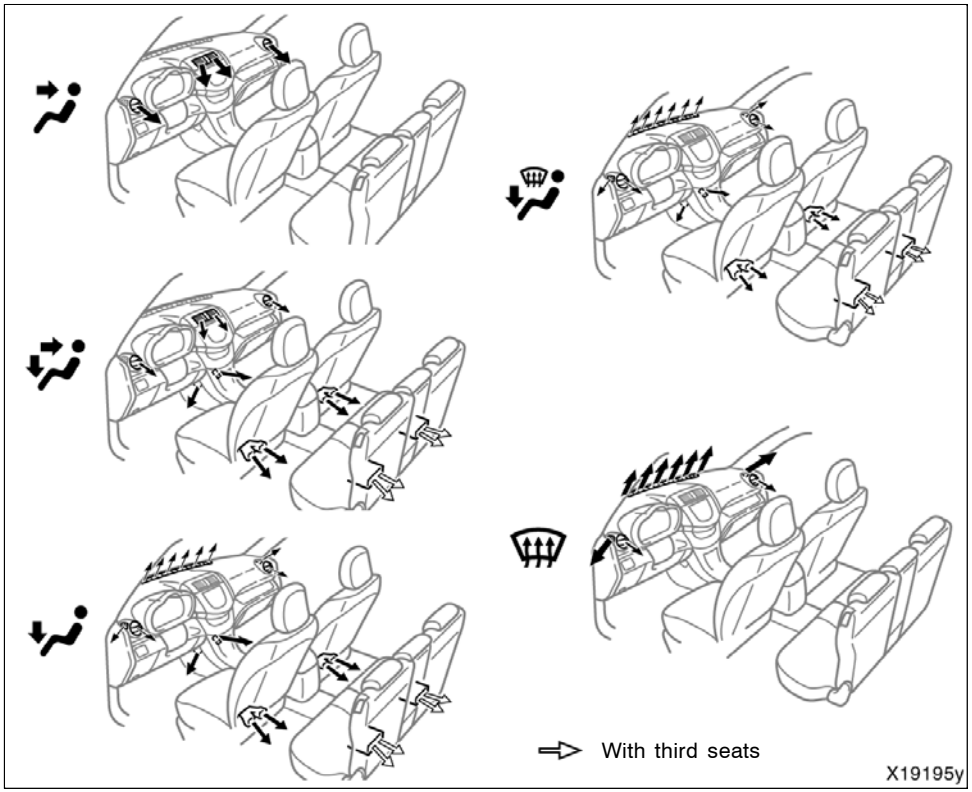

—Operating tips

- To cool off your Toyota after it has been parked in the hot sun, drive with the windows open for a few minutes. This vents the hot air, allowing the air conditioning to cool the interior more quickly.
- Make sure the air intake grilles in front of the windshield are not blocked (by leaves or snow, for example).
- Keep the area under the front (and second) seats clear to allow air to circulate throughout the vehicle.
- On cold days, set the fan speed to high for a minute to help clear the intake ducts of snow or moisture. This can reduce the amount of fogging on the windows.
- When driving on dusty roads, close all windows. If dust thrown up by the vehicle is still drawn into the vehicle after closing the windows, it is recommended that the air intake selector be set to FRESH and the fan speed selector to any setting except off.

- If following another vehicle on a dusty road, or driving in windy and dusty conditions, it is recommended that the air intake selector be temporarily set to RECIRCULATE, which will close off the outside passage and prevent outside air and dust from entering the vehicle interior.

⚠ CAUTION

To prevent the windshield from fogging up, do not use the windshield air flow button during cool air operation in extremely humid weather. The difference between the temperature of the outside air and that of the windshield can cause the outer surface of the windshield to fog up, blocking your vision.

NOTICE

To prevent battery discharge, do not leave the air conditioning system on longer than necessary when the engine is stopped.

Heating

For best results, set controls to:

—For automatic operation

Press in the “AUTO” button.
Temperature—To the desired temperature
Air intake—FRESH (outside air)
Air conditioning—OFF

—For manual operation

Fan speed—To the desired fan speed
Temperature—Towards high temperature
Air intake—FRESH (outside air)
Air flow—FLOOR
Air conditioning—OFF

- For quick heating, select recirculated air for a few minutes. To keep the windows from fogging, select fresh after the vehicle interior has been warmed.
- Press the “A/C” button on for dehumidified heating.
- Choose floor/windshield air flow to heat the vehicle interior while defrosting or defogging the windshield.

Air conditioning

For best results, set controls to:

—For automatic operation

Press in the “AUTO” button.
Temperature—To the desired temperature
Air intake—FRESH (outside air)
Air conditioning—ON

—For manual operation

Fan speed—To the desired fan speed
Temperature—Towards low temperature
Air intake—FRESH (outside air)
Air flow—PANEL
Air conditioning—ON

- For quick cooling, select recirculated air.

Ventilation

For best results, set controls to:

—For automatic operation

Press in the “AUTO” button.
Temperature—Towards low temperature
Air intake—FRESH (outside air)
Air conditioning—OFF

—For manual operation

Fan speed—To the desired fan speed
Temperature—Towards low temperature
Air intake—FRESH (outside air)
Air flow—PANEL
Air conditioning—OFF

Defogging and defrosting

—The inside of the windshield

For best results, set controls to:

—For automatic operation

Temperature—Towards high temperature to heat; low temperature to cool
Air intake—FRESH (outside air)
Air flow—WINDSHIELD

—For manual operation

Fan speed—To the desired fan speed
Temperature—Towards high temperature to heat; low temperature to cool
Air intake—FRESH (outside air)
Air flow—WINDSHIELD

Pressing the windshield air flow button turns on the defogging function with the purpose of clearing the front view.

Pressing this button once again returns the air flow mode to the last one used.

In this position, the air intake selector mode changes to FRESH automatically to clean up the front view quickly. It is not possible to return to RECIRCULATE in this position.

Pressing the windshield air flow button turns on the defroster–linked air conditioning. This is to clean up the front view more quickly.

To turn off the air conditioning alone, press the “A/C” button once again.

When the “A/C” button is not pressed in, pressing another air flow button turns off the air conditioning.

- On humid days, do not blow cold air on the windshield—the difference between the outside and inside temperatures could make the fogging worse.

—The outside of the windshield

For best results, set controls to:

—For automatic operation

Temperature—Towards high temperature
Air intake—FRESH (outside air)
Air flow—WINDSHIELD

—For manual operation

Fan speed—To the desired fan speed
Temperature—Towards high temperature
Air intake—FRESH (outside air)
Air flow—WINDSHIELD

Pressing the windshield air flow button turns on the defogging function with the purpose of clearing the front view.

Pressing this button once again returns the air flow mode to the last one used.

In this position, the air intake selector mode changes to FRESH automatically to clean up the front view quickly. It is not possible to return to RECIRCULATE in this position.

Pushing this button turns on the defroster–linked air conditioning. This is to clean up the front view more quickly.

To turn off the air conditioning alone, press the “A/C” button once again.

When the “A/C” button is not pressed in, pressing another air flow button turns off the air conditioning.

- To heat the vehicle interior while defrosting the windshield, choose floor/windshield air flow.

Side vents

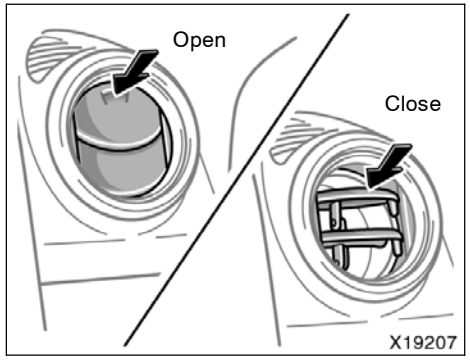

If air flow control is not satisfactory, check the side vents. The side vents may be opened or closed as shown.

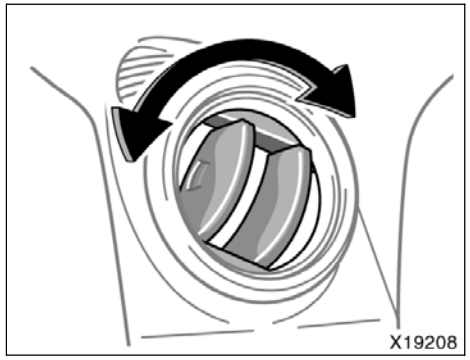

You can change air flow direction by turning the side vents.

Air conditioning filter—

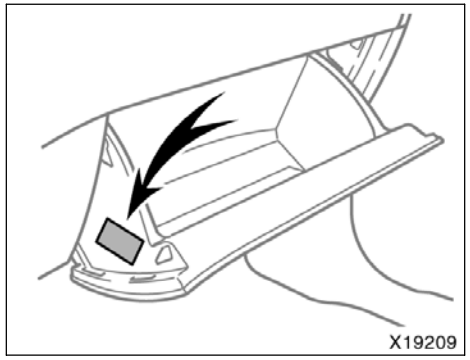

The air conditioning filter information label is placed in the glove box as shown and indicates that a filter has been installed.

The air conditioning filter prevents dust from entering the vehicle through the air conditioning vent.

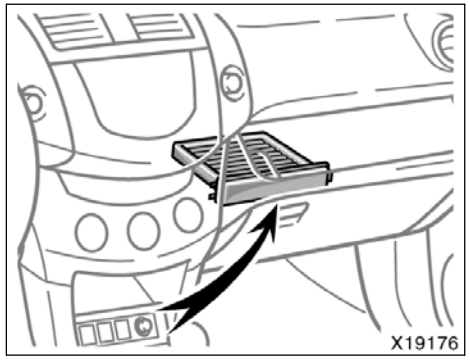

The air conditioning filter is behind the glove box.

—Checking and replacing the air conditioning filter

The air conditioning filter may clog after long use. The filter may need to be replaced if the air flow of the air conditioning and heater experiences extreme reductions in operating efficiency, or if the windows begin to fog up easily in FRESH mode.

To maintain the air conditioning efficiency, inspect and replace the air conditioning filter according to the maintenance schedule. In dusty areas or areas with heavy traffic flow, such as inner city or desert areas, early replacement may be required. (For scheduled maintenance information, please refer to the “Scheduled Maintenance Guide” or “Owner’s Manual Supplement”.)

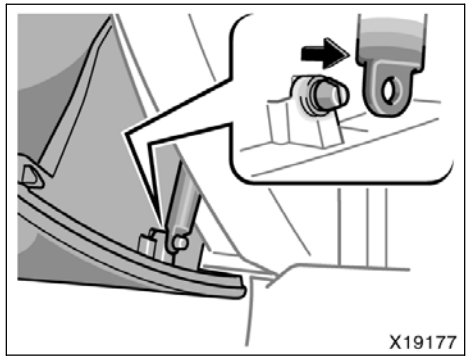

1. Open the glove box. Slide off the damper as shown.

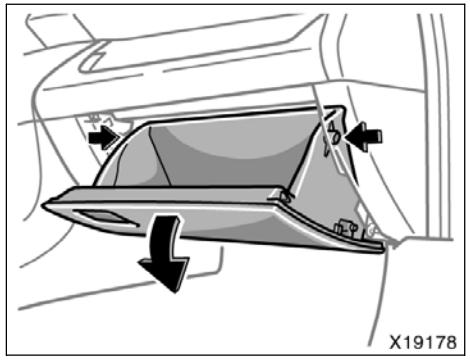

2. Push in each side of the glove box to disconnect the claws.

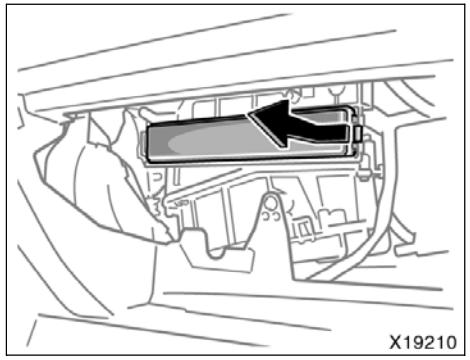

3. Remove the filter cover as shown in the illustration.

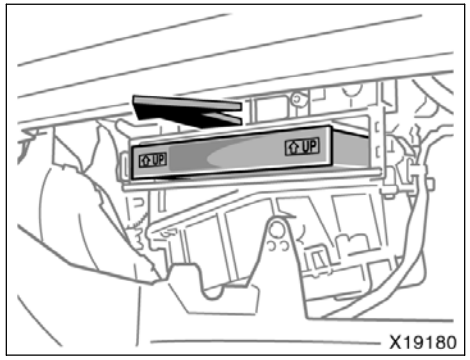

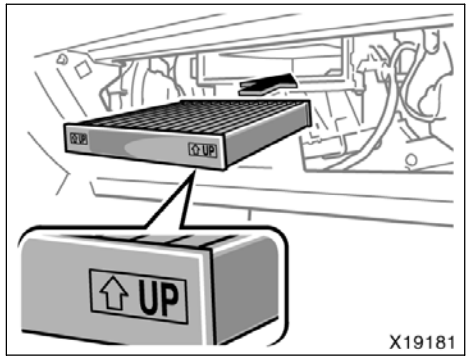

4. Pull the filter out of the filter outlet. Inspect the filter on the surface.

If it is dirty, it should be replaced.

When inserting the filter in the filter outlet, keep the arrow pointing up.

INFORMATION

The air filter should be installed properly in position. The use of air conditioning with the air filter removed may cause deteriorated dustproof performance and then affect air conditioning performance.

SECTION 1 – 10

OPERATION OF INSTRUMENTS AND CONTROLS

Other equipment

Clock 288
Power outlets 288
Glove box 291
Auxiliary box 291
Luggage storage boxes 292
Rear console box 293
Front cup holders 294
Rear cup holders 294
Bottle holders 295
Tie–down hooks 295
Grocery bag hooks 296
Luggage cover 296
Rear cargo net 300
Roof luggage carrier 303
Floor mat 304

Clock

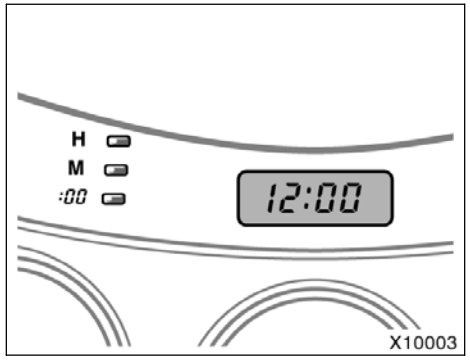

Manual air conditioning system

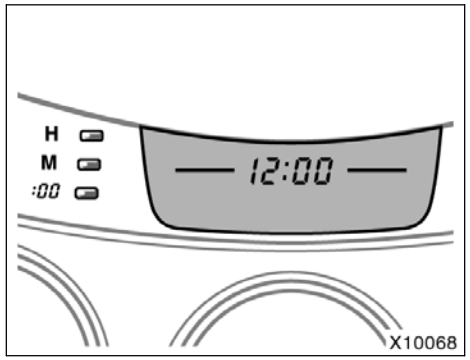

Automatic air conditioning system

To reset the hour: Push the “H” button.
To reset the minutes: Push the “M” button.

If quick adjustment to a full hour is desired, push the “:00” button.

For example, if the “:00” button is depressed when the time is between 1:01—1:29, the time will change to 1:00. If the time is between 1:30—1:59, the time will change to 2:00.

The engine switch must be in the “ACC” or “ON” position.

If the electrical power source has been disconnected from the clock, the time display will automatically be set to 1:00 (one o’clock).

Power outlets (12 VDC)

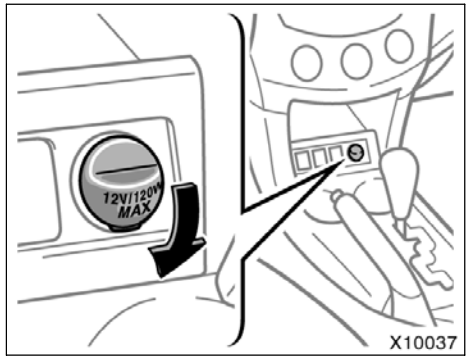

Instrument panel

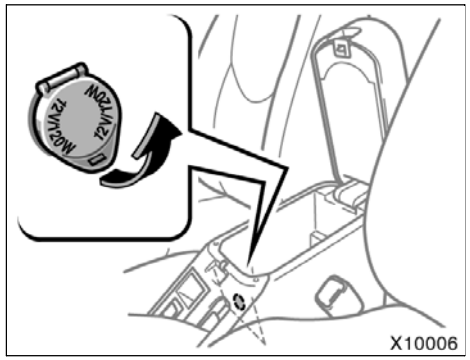

Rear console box

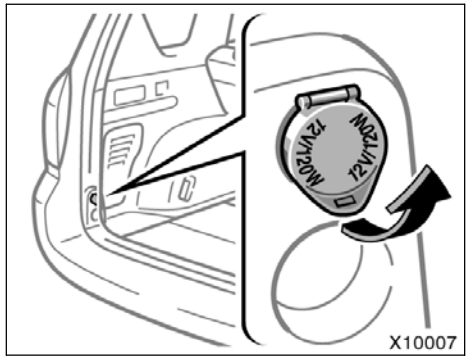

Luggage compartment

The power outlets are designed for power supply for car accessories.

The engine switch must be in the “ACC” or “ON” position for the power outlets to be used.

NOTICE

- ***To prevent the fuse from being blown, do not use the electricity over the total vehicle capacity of 12 V/120W (front and rear outlets together).***
- ***To prevent the battery from being discharged, do not use the power outlets longer than necessary when the engine is not running.***
- ***Close the power outlet lids when the power outlets are not in use. Inserting anything other than an appropriate plug that fits the outlet, or allowing any liquid to get into the outlet may cause electrical failure or short circuits.***

Power outlet (115 VAC)

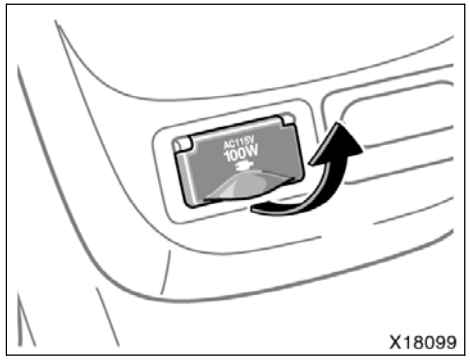

This power outlet is designed for use as a power supply for electric appliances in the vehicle.

The engine switch must be in the “ON” position for the power outlet to be used.

The maximum capacity for this power outlet is 115 VAC/100W. If you attempt to use an appliance that requires more than 115 VAC or 100W, the protection circuit will activate and cut the power supply. The power supply will restart automatically when you use an appliance that operates within the 115 VAC/100W limits.

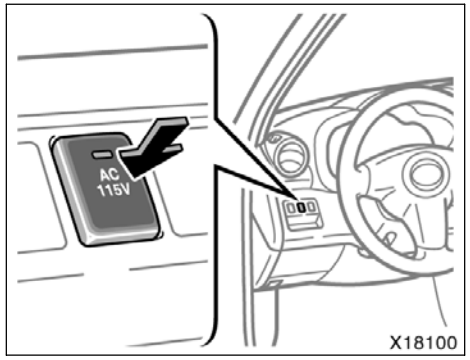

To use the power outlet, push the main switch on the instrument panel.

An indicator light will illuminate to indicate that the power outlet is ready for use.

Push the main switch once again to turn the power outlet off. When the power outlet is not in use, make sure that the main switch is turned off.

NOTICE

- ***To prevent the battery from being discharged, do not use the power outlet longer than necessary when the engine is not running.***
- ***Close the power outlet lid when the power outlet is not in use. Inserting anything other than an appropriate plug that fits the outlet may cause electrical failure or short circuits.***

The power outlet is not designed for the following electric appliances even though their power consumption is under 115 VAC/100W. These appliances may not operate properly.

- Appliances with high initial peak wattage: cathode–ray tube type televisions, compressor–driven refrigerators, electric pumps, electric tools, etc.
- Measuring devices which process precise data: medical equipment, measuring instruments, etc.
- Other appliances requiring an extremely stable power supply: microcomputer–controlled electric blankets, touch sensor lamps, etc.

Certain electrical appliances may cause radio noise.

Glove box

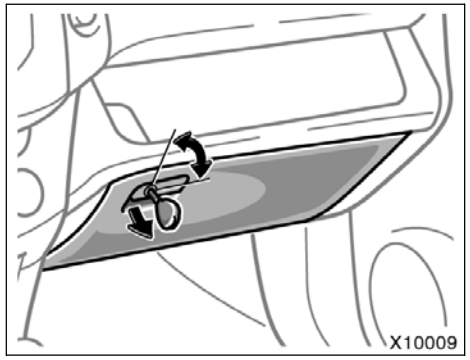

To use the glove box:

Open by pulling the lever.

Lock by inserting the master key and turning it clockwise.

Unlock by inserting the master key and turning it counterclockwise.

⚠ CAUTION

To reduce the chance of injury in case of an accident or a sudden stop, always keep the glove box door closed while driving.

Auxiliary box (overhead console)

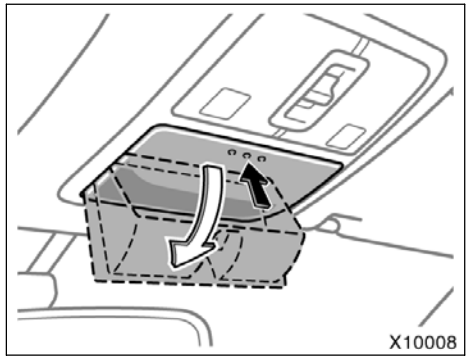

To use the box, open it as shown above.

⚠ CAUTION

- **To reduce the chance of injury in case of an accident or a sudden stop, always keep the auxiliary box closed while driving.**
- **As this holder is designed for holding light objects such as eyeglasses, do not place objects heavier than 0.2 kg (0.4 lb.) in it. Heavy objects may cause the holder to open and the contents to fly out resulting in injuries.**

NOTICE

During hot weather, the interior of the vehicle becomes very hot. Do not leave anything flammable or deformable such as a lighter, glasses, etc. inside.

Auxiliary box (instrument panel)

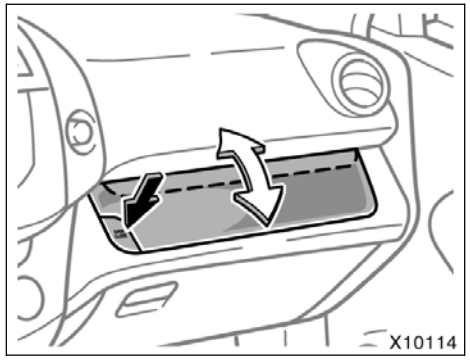

To open the box, push the “OPEN CLOSE” button.
To close the box, push the “OPEN CLOSE” button again.

Do not attempt to open the box forcibly when your vehicle is on a steep downhill. Move your vehicle to flat road and open the box by pushing the button.

⚠ CAUTION

To reduce the chance of injury in case of an accident or a sudden stop, always keep the auxiliary box closed while driving.

Luggage storage boxes

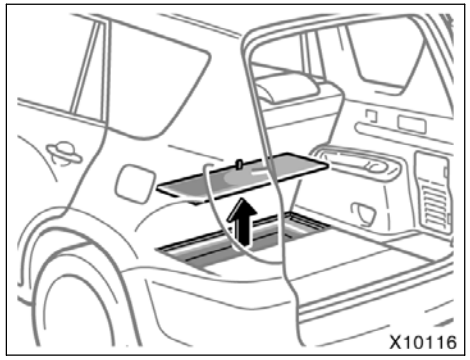

Front

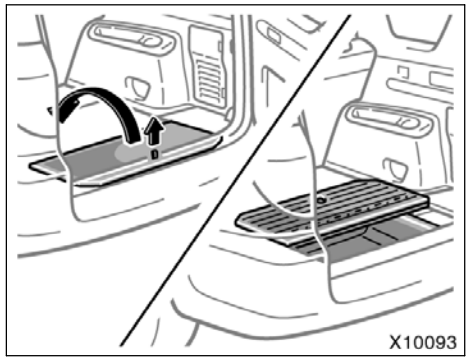

Rear (type A)

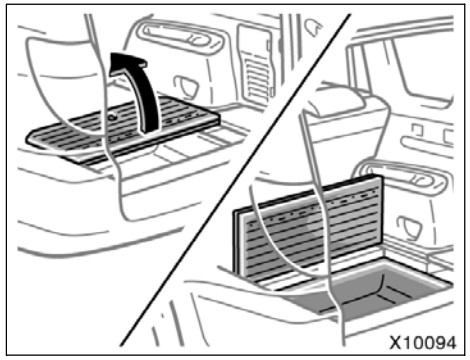

Rear (type B)

To use the box, do the following.

Front: Remove the deck board.
Rear (type A): Open the deck board by pulling up the strap.
Rear (type B): Fold up the deck board.

⚠ CAUTION

To reduce the chance of injury in case of an accident or a sudden stop, always keep the luggage storage boxes closed while driving.

Rear console box

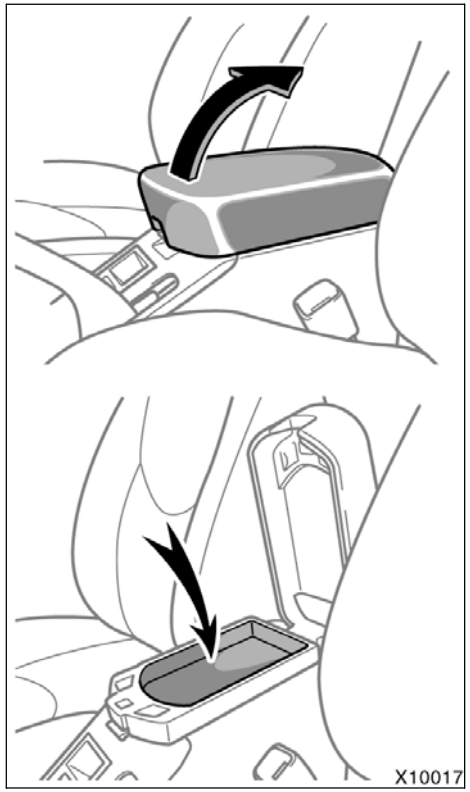

UPPER TRAY

To access the upper tray, raise the console box lid without touching the lock release lever.

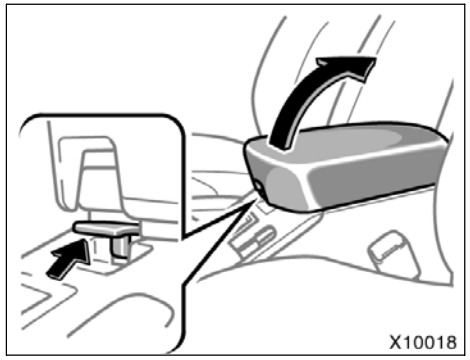

CONSOLE BOX

To access the rear console box, pull up the lock release lever while raising the rear console box lid.

⚠ CAUTION

To reduce the chance of injury in case of an accident or a sudden stop, always keep the console box closed while driving.

Front cup holders

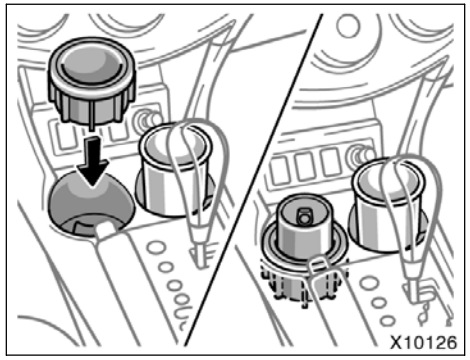

The cup holders are designed for holding cups or drink–cans securely.

A detachable adapter is provided for each cup holder. Installing the adapter allows a smaller cup or drink–can to be securely held in the holder.

⚠ CAUTION

Do not place anything else other than cups or drink–cans in the cup holder, as such items may be thrown about in the compartment and possibly injure people in the vehicle during sudden braking or in an accident.

Rear cup holders

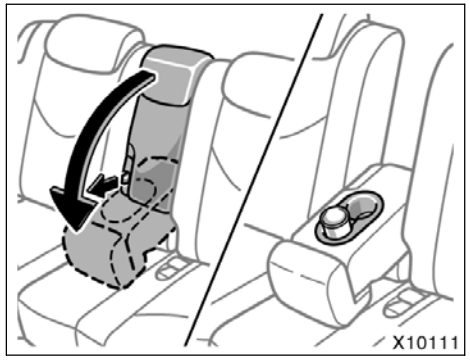

For rear/second seats

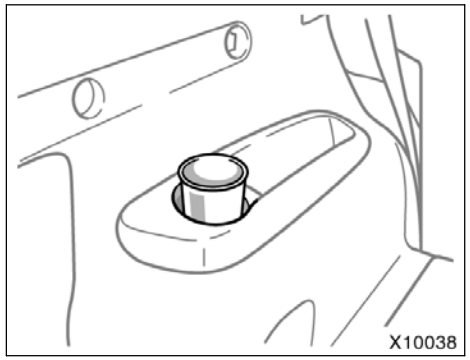

For third seats

The cup holders are designed for holding cups or drink–cans securely.

For the rear/second seat cup holder: To use the holder, push down the armrest by pulling the strap forward.

⚠ CAUTION

Do not place anything else other than cups or drink–cans in the cup holder, as such items may be thrown about in the compartment and possibly injure people in the vehicle during sudden braking or in an accident.

Bottle holders

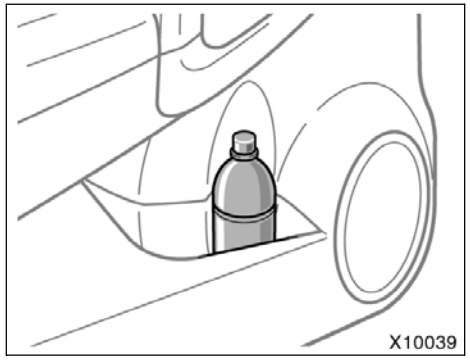

Front door

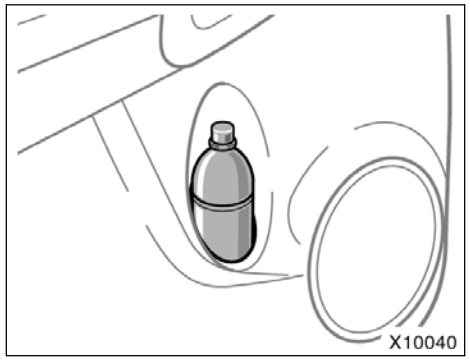

Rear door

The bottle holders are designed to hold bottles securely.

⚠ CAUTION

Do not attempt to use the holder for any other purpose for which it was intended. Inappropriately sized or shaped objects may be thrown about in the compartment and possibly injure people in the vehicle during a sudden braking or an accident.

NOTICE

Do not put a cup or open bottle in the bottle holder because the contents may spill when the door opens or closes.

Tie–down hooks

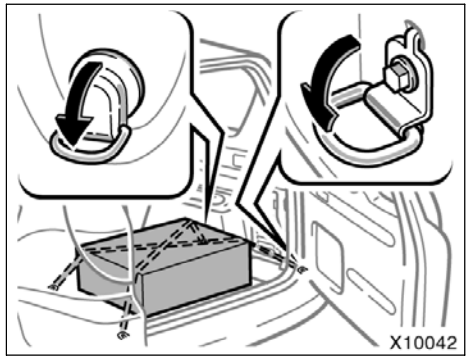

To secure your luggage, use the tie–down hooks as shown above.

See “—Stowage precautions” on page 336 in Section 2 for precautions when loading luggage.

Vehicles with third seat: When using the tie–down hooks, stow the third seat (For detailed information, see “—Stowing third seats for luggage space” on page 47 in Section 1–3).

⚠ CAUTION

To avoid personal injury, keep the tie–down hooks stored when not in use.

Grocery bag hooks

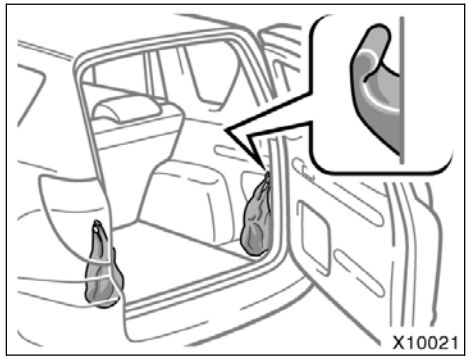

This hook is designed to hang things such as grocery bags.

NOTICE
To prevent damage to the hook, avoid hanging heavy load on it.

Luggage cover

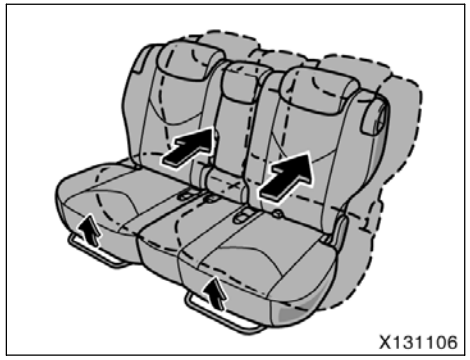

BEFORE USING LUGGAGE COVER

Move the rear/second seats to the rear–most lock position.

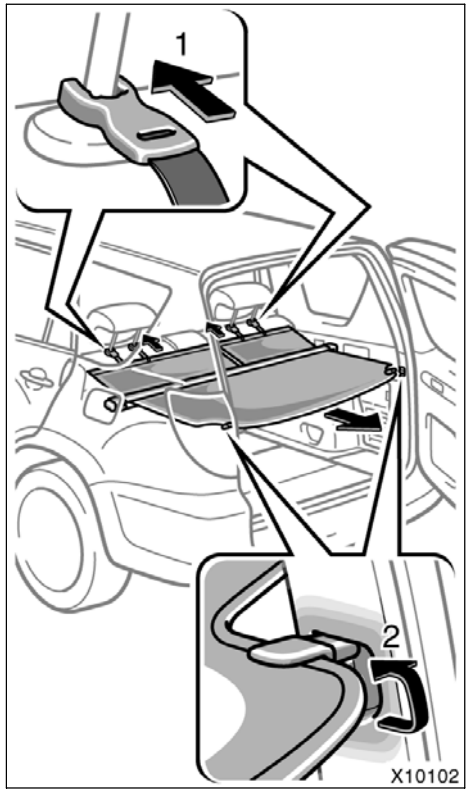

USING LUGGAGE COVER

To use the luggage cover:

1. **Attach the front hooks of the luggage cover to the head restraint.**
2. **Pull out the rear luggage cover and hook it on the anchors.**

⚠ CAUTION

- **Do not place anything on the luggage cover. Such items may be thrown about and possibly injure people in the vehicle during sudden braking or a collision.**
- **To reduce the chance of death or serious injury in case of an accident or sudden stop, make sure the luggage cover is secured in place.**

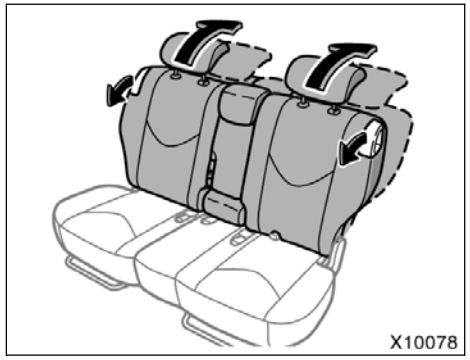

If the front hooks cannot be attached to the head restraint, push down the rear/second seatback.

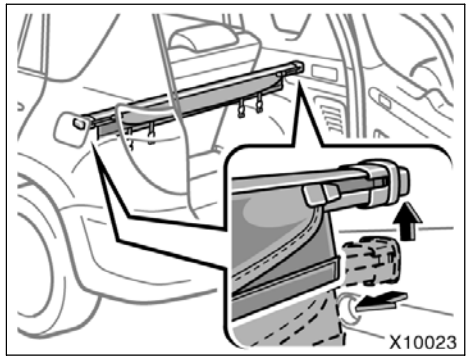

REMOVING LUGGAGE COVER

Compress the end of the luggage cover and lift the cover up.

After you remove the luggage cover, stow it under deck board as described below. This will prevent passengers from injury in the event of a sudden stop or accident.

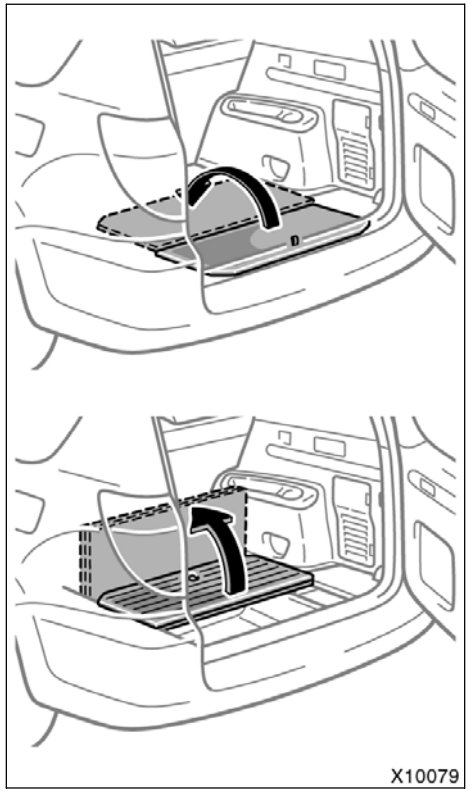

STOWING LUGGAGE COVER (without third seats)

1. Open the deck board.

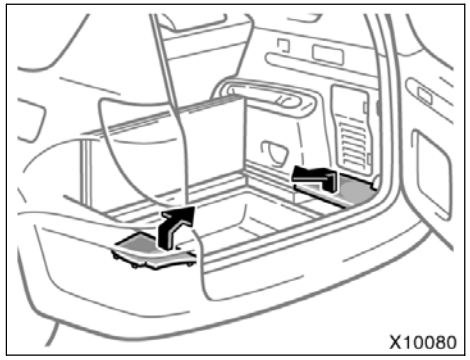

2. Remove the deck side cover.

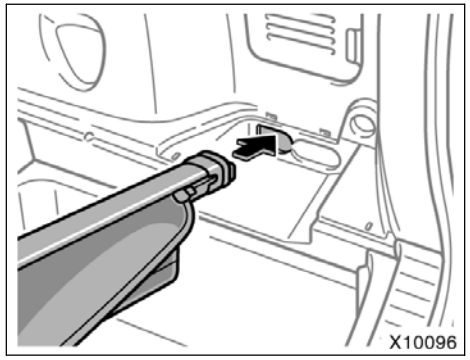

3. Insert the right end of the luggage cover into the hole in the luggage storage box as shown.

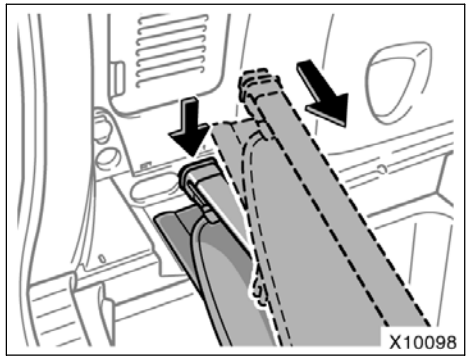

4. Compress the left end of the luggage cover, and fit it into the hollow on the other side of the luggage storage box.

⚠ CAUTION

Make sure the luggage cover is surely stowed.

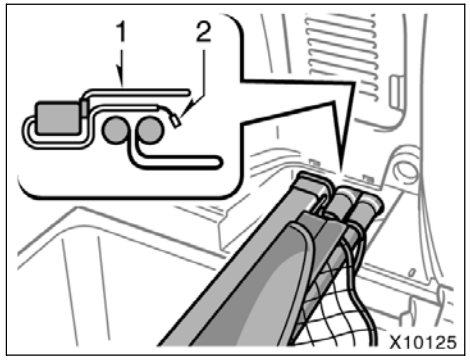

When you stow the rear cargo net and luggage cover together, stow the rear cargo net first and then the luggage cover. (See “Rear cargo net” on page 300 in this section.)

Place the front portion of the luggage cover (2) on the stowed rear cargo net and then place the rear portion of the luggage cover (1) over the rear cargo net. Otherwise, the deck board may not close securely.

Rear cargo net

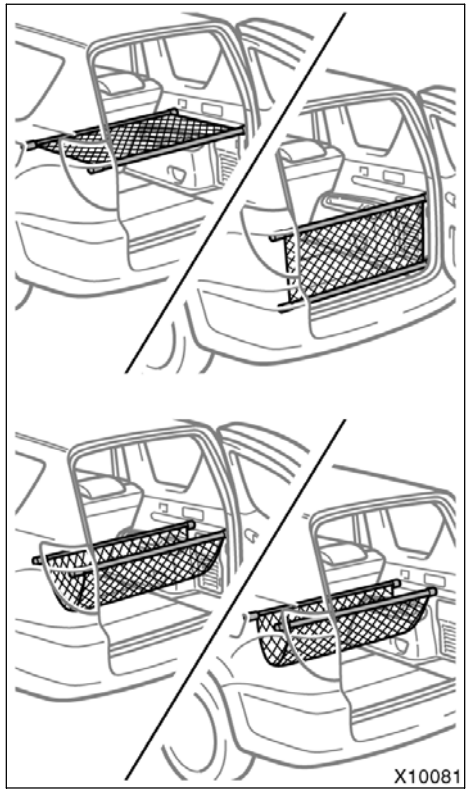

To secure your luggage, use the rear cargo net. You can also put loads on the net.

See “—Stowage precautions” on page 336 in Section 2 for precautions when loading luggage.

CAUTION

- **To reduce the chance of injury in case of an accident or sudden stop, make sure the net is secured in place.**
- **Do not climb on or hang on the net.**
- **To prevent cargo and luggage from sliding forward during braking, do not place anything on the net higher than the rear seatbacks. Otherwise, such items may be thrown about and possibly injure people in the vehicle during sudden braking or an accident.**

NOTICE

- ***Do not place breakable items on the net.***
- ***Do not place anything heavier than 10 kg (22.1 lb.) on the net.***

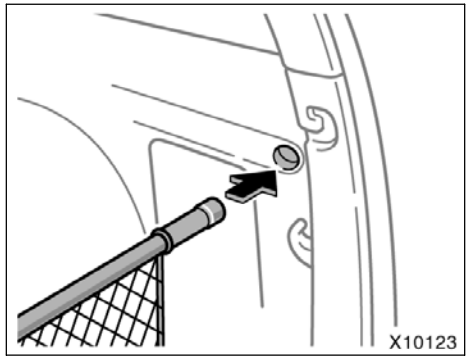

USING CARGO NET

To use the net, insert the right end of the pipe into the hole.

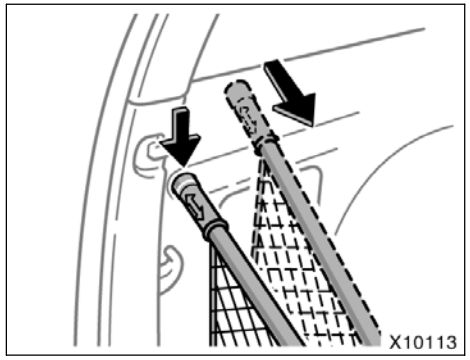

Compress the left end of the pipe, and fit it into the hole on the other side of the luggage compartment.

Vehicles with third seat: When sitting in the third seat, you cannot use the rear cargo net. Make sure to remove the rear cargo net.

When using the rear cargo net, stow the third seat (For detailed information, see “—Stowing third seats for luggage space” on page 47 in Section 1–3).

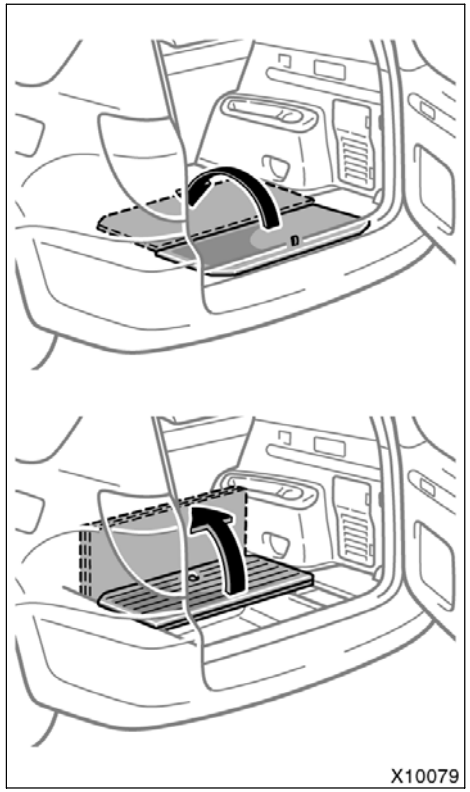

STOWING REAR CARGO NET (without third seat)

1. Open the deck board.

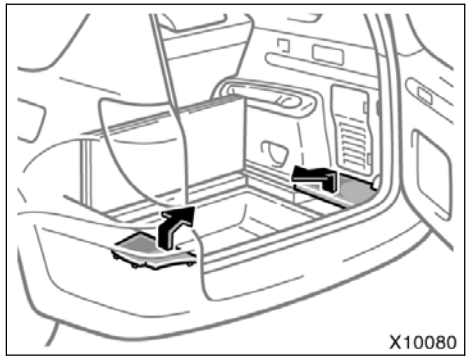

2. Remove the deck side cover.

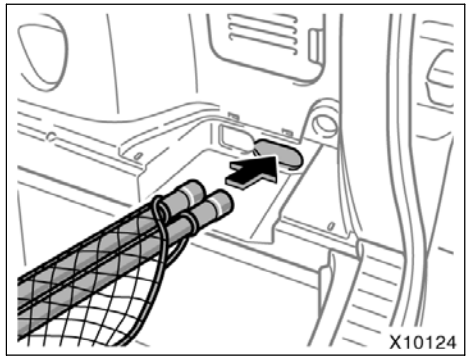

3. Insert the right end of the rear cargo net into the luggage storage box as shown.

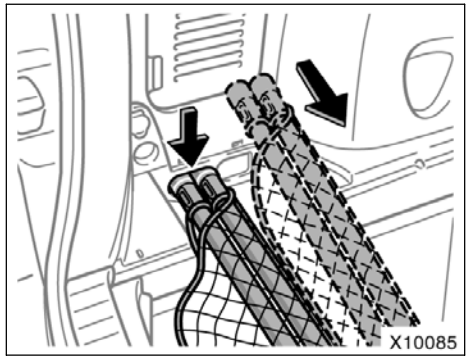

4. **Compress the left end of the rear cargo net, and fit it into the other side of the luggage storage box.**

⚠ CAUTION

Make sure the rear cargo net is surely stowed.

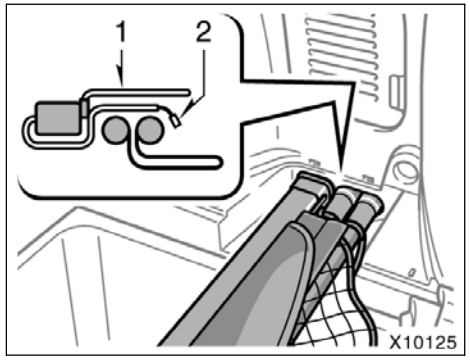

When you stow the rear cargo net and luggage cover together, stow the rear cargo net first and then the luggage cover. (See “Luggage cover” on page 296 in this section.)

Place the front portion of the luggage cover (2) on the stowed rear cargo net and then place the rear portion of the luggage cover (1) over the rear cargo net. Otherwise, the deck board may not close securely.

Roof luggage carrier

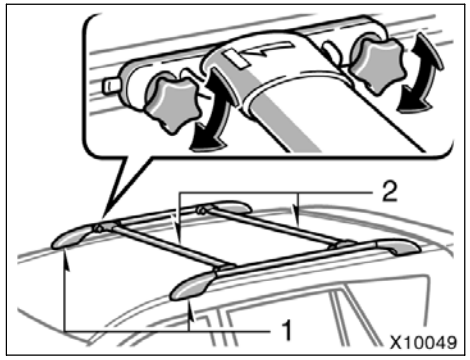

The roof luggage carrier consists of roof rails (1) attached to the roof and sliding cross rails (2).

To adjust the positions of cross rails, do this.

1. Turn the knobs counterclockwise to loosen the cross rails.
2. Slide the cross rails to the desired position for loading the luggages of various sizes.
3. After adjusting, be sure to tighten the cross rails by turning knobs clockwise.

Follow the manufacture’s instructions and precautions when installing the attachments or their equivalent.

⚠ CAUTION

When you load cargo on the roof luggage carrier, observe the following:

- **Place the cargo so that its weight is distributed evenly between the front and rear axles.**
- **If loading long or wide cargo, never exceed the vehicle overall length or width. (See “Dimensions and weights” on page 428 in Section 8 for information on your vehicle overall length and width.)**
- **Before driving, make sure the cargo is securely fastened on the roof luggage carrier.**
- **Loading cargo on the roof luggage carrier will make the center of the vehicle gravity higher. Avoid high speeds, sudden starts, sharp turns, sudden braking or abrupt maneuvers, otherwise it may result in loss of control or vehicle rollover due to failure to operate this vehicle correctly.**
- **If driving for a long distance, on rough roads, or at high speeds, stop the vehicle now and then during the trip to make sure the cargo remains in its place.**
- **Do not exceed 46.2 kg (102.6 lb.) cargo weight on the roof luggage carrier.**

NOTICE

When loading the luggages, be careful not to scratch the surface of the moon roof.

Floor mat

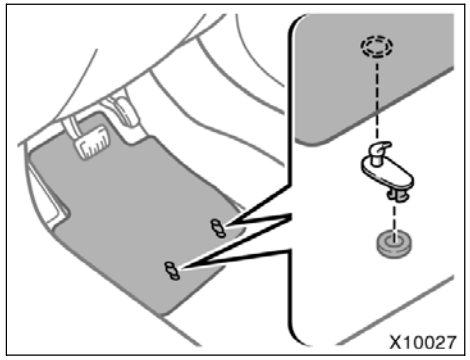

Use a floor mat of the correct size.

If the vehicle carpet and floor mat have 2 holes, then they are designed for use with locking clips. Attach the floor mat to the vehicle carpet using the clips. Lock the clips into the holes in the vehicle carpet.

CAUTION

Observe the following precautions. Failure to do so may result in the floor mat slipping and interfering with the movement of the pedals during driving, resulting in an accident.

- **Make sure the floor mat is properly placed on the vehicle carpet and the correct side faces upward.**
- **Do not place floor mats on top of existing mats.**

SECTION 2

INFORMATION BEFORE DRIVING YOUR TOYOTA

Information before driving your Toyota

Utility vehicle precautions 308
Break–in period 309
Fuel 309
Fuel pump shut off system 311
Operation in foreign countries 311
Three–way catalytic converters 312
Engine exhaust cautions 313
Facts about engine oil consumption 314
Iridium–tipped spark plugs 315
Brake system 315
Brake pad wear limit indicators 319
Electric power steering system 319
Rear step bumper 321
Your Toyota’s identification 321
Theft prevention labels 323
Suspension and chassis 323
Tire information 324
Vehicle load limits 335
Cargo and luggage 336
Types of tires 338

Utility vehicle precautions

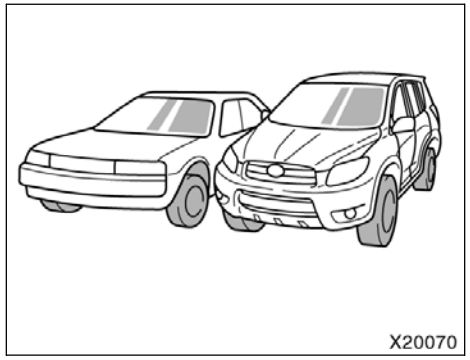

This vehicle belongs to the utility vehicle class, which has higher ground clearance and narrower tread in relation to the height of its center of gravity to make it capable of performing in a wide variety of off–road applications. Specific design characteristics give it a higher center of gravity than ordinary passenger cars. This vehicle design feature causes this type of vehicle to be more likely to rollover. And, utility vehicles have a significantly higher rollover rate than other types of vehicles. An advantage of the higher ground clearance is a better view of the road allowing you to anticipate problems. It is not designed for cornering at the same speeds as ordinary passenger cars any more than low–slung sports cars designed to perform satisfactorily under off–road conditions. Therefore, sharp turns at excessive speeds may cause rollover.

⚠ CAUTION

Always observe the following precautions to minimize the risk of serious personal injury or damage to your vehicle:

- **In a rollover crash, an unbelted person is significantly more likely to die than a person wearing a seat belt. Therefore, the driver and all passengers should fasten their seat belts whenever the vehicle is moving.**
- **Avoid sharp turns or abrupt maneuvers, if at all possible. Failure to operate this vehicle correctly may result in loss of control or vehicle rollover causing death or serious injury.**
- **Loading cargo on the roof luggage carrier will make the center of the vehicle gravity higher. Avoid high speeds, sudden starts, sharp turns, sudden braking or abrupt maneuvers, otherwise it may result in loss of control or vehicle rollover due to failure to operate this vehicle correctly.**

- **Always slow down in gusty cross-winds. Because of its profile and higher center of gravity, your vehicle is more sensitive to side winds than an ordinary passenger car. Slowing down will allow you to have better control.**
- **When driving off–road or in rugged terrain, do not drive at excessive speeds, jump, make sharp turns, strike objects, etc. This may cause loss of control or vehicle rollover causing death or serious injury. You are also risking expensive damage to your vehicle’s suspension and chassis.**
- **Do not drive horizontally across steep slopes. Driving straight up or straight down is preferred. Your vehicle (or any similar off–road vehicle) can tip over sideways much more easily than forward or backward.**

Break–in period

Drive gently and avoid high speeds.

Your vehicle does not need an elaborate break–in. But following a few simple tips for the first 1600 km (1000 miles) can add to the future economy and long life of your vehicle:

- Avoid full throttle acceleration when starting and driving.
- Avoid racing the engine.
- Try to avoid hard stops during the first 300 km (200 miles).
- Do not drive for a long time at any single speed, either fast or slow.
- Do not tow a trailer during the first 800 km (500 miles).

Fuel

FUEL TYPE

Your new vehicle must use only unleaded gasoline.

To help prevent gas station mix–ups, your Toyota has a smaller fuel tank opening. The special nozzle on pumps with unleaded fuel will fit it, but the larger standard nozzle on pumps with leaded gas will not.

At a minimum, the gasoline you use should meet the specifications of ASTM D4814 in the U.S.A. and CGSB 3.5–M93 in Canada.

NOTICE

Do not use leaded gasoline. Use of leaded gasoline will cause the three–way catalytic converter to lose its effectiveness and the emission control system to function improperly. Also, this can increase maintenance costs.

OCTANE RATING

Select octane rating 87 (Research Octane Number 91) or higher.

Use of unleaded gasoline with an octane rating lower than 87 may result in engine knocking. Persistent knocking can lead to engine damage.

If your engine knocks...

If you detect heavy knocking even when using the recommended fuel, or if you hear steady knocking while holding a steady speed on level roads, consult your Toyota dealer.

However, occasionally, you may notice light knocking for a short time while accelerating or driving up hills. This is normal and there is no need for concern.

GASOLINE CONTAINING DETERGENT ADDITIVES

Toyota recommends the use of gasoline that contains detergent additives to avoid build–up of engine deposits.

However, all gasoline sold in the U.S. contains detergent additives to keep clean and/or clean intake systems.

QUALITY GASOLINE

Automotive manufacturers in the U.S., Europe and Japan have developed a specification for quality fuel named World–Wide Fuel Charter (WWFC) that is expected to be applied world wide. The WWFC consists of four categories that depend on required emission levels. In the U.S., category 4 has been adopted. The WWFC improves air quality by providing for better emissions in vehicle fleets, and customer satisfaction through better vehicle performance.

CLEANER BURNING GASOLINE

Cleaner burning gasoline, including reformulated gasoline that contains oxygenates such as ethanol or MTBE is available in many areas.

Toyota recommends the use of cleaner burning gasoline and appropriately blended reformulated gasoline. These types of gasoline provide excellent vehicle performance, reduce vehicle emissions, and improve air quality.

OXYGENATES IN GASOLINE

Toyota allows the use of oxygenate blended gasoline where the oxygenate content is up to 10% ethanol or 15% MTBE. If you use gasohol in your Toyota, be sure that it has an octane rating no lower than 87.

Toyota does not recommend the use of gasoline containing methanol.

GASOLINE CONTAINING MMT

Some gasoline contain an octane enhancing additive called MMT (Methylcyclopentadienyl Manganese Tricarbonyl).

Toyota does not recommend the use of gasoline that contains MMT. If fuel containing MMT is used, your emission control system may be adversely affected. The Malfunction Indicator Lamp on the instrument cluster may come on. If this happens, contact your Toyota dealer for service.

GASOLINE QUALITY

In a very few cases, you may experience driveability problems caused by the particular gasoline that you are using. If you continue to have unacceptable driveability, try changing gasoline brands. If this does not rectify your problem, then consult your Toyota dealer.

NOTICE

- ***Do not use gasohol other than stated above. It will cause fuel system damage or vehicle performance problems.***
- ***If driveability problems occur (poor hot starting, vaporizing, engine knock, etc.), discontinue the use.***
- ***Take care not to spill gasohol during refueling. Gasohol may cause paint damage.***

FUEL TANK CAPACITY

60 L (15.9 gal., 13.2 Imp. gal.)

Fuel pump shut off system

The fuel pump shut off system stops supplying fuel to the engine to minimize the risk of fuel leakage when the engine stalls or an airbag inflates upon collision. To restart the engine after the fuel pump shut off system activates, turn the engine switch to the “ACC” or “LOCK” position once and start it.

⚠ CAUTION

Inspect the ground under the vehicle before restarting the engine. If you find that fuel has leaked onto the ground, the fuel system has been damaged and is in need of repair. In this case, do not restart the engine.

Operation in foreign countries

If you plan to drive your Toyota in another country...

First, comply with the vehicle registration laws.

Second, confirm the availability of the correct fuel (unleaded and minimum octane number).

Three–way catalytic converters

The three–way catalytic converter is an emission control device installed in the exhaust system.

The purpose is to reduce pollutants in the exhaust gas.

⚠ CAUTION

- **Keep people and combustible materials away from the exhaust pipe while the engine is running. The exhaust gas is very hot.**
- **Do not idle or park your vehicle over anything that might burn easily such as grass, leaves, paper or rags.**

NOTICE

A large amount of unburned gases flowing into the three–way catalytic converter may cause it to overheat and create a fire hazard. To prevent this and other damage, observe the following precautions:

- ***Use only unleaded gasoline.***
- ***Do not drive with an extremely low fuel level; running out of fuel could cause the engine to misfire, creating an excessive load on the three–way catalytic converter.***
- ***Do not allow the engine to run at idle speed for more than 20 minutes.***
- ***Avoid racing the engine.***
- ***Do not push–start or pull–start your vehicle.***
- ***Do not turn off the engine while the vehicle is moving.***
- ***Keep your engine in good running order. Malfunctions in the engine electrical system, electronic ignition system/distributor ignition system or fuel systems could cause an extremely high three–way catalytic converter temperature.***
- ***If the engine becomes difficult to start or stalls frequently, take your vehicle in for a check–up as soon as possible. Remember, your Toyota dealer knows your vehicle and its three–way catalytic converter system best.***
- ***To ensure that the three–way catalytic converter and the entire emission control system operate properly, your vehicle must receive the periodic inspections required by the Toyota Maintenance Schedule. For scheduled maintenance information, refer to the “Scheduled Maintenance Guide” or “Owner’s Manual Supplement”.***

Engine exhaust cautions

CAUTION

- Exhaust gases include harmful carbon monoxide (CO) that is colorless and odorless. Inhaling exhaust gases may lead to death or a serious health hazard.
- The exhaust should be checked occasionally. If there is a hole or crack caused by corrosion, damage to a joint or abnormal exhaust noise, be sure to have the vehicle inspected and repaired by your Toyota dealer. Failure to do so may allow exhaust gases to enter the vehicle, resulting in death or a serious health hazard.
- If the vehicle is in a poorly ventilated area, turn the engine off. In a closed area, such as a garage, exhaust gases may collect and enter the vehicle. This may lead to death or a serious health hazard.
- Do not remain for a long time in a parked vehicle with the engine running. If it is unavoidable, however, do so only in an unconfined area and adjust the heating or cooling system to force outside air into the vehicle.
- Keep the back door closed while driving. An open or unsealed back door may cause exhaust gases to be drawn into the vehicle.
- To allow proper operation of your vehicle’s ventilation system, keep the inlet grilles in front of the windshield clear of snow, leaves, or other obstructions.
- If the smell of exhaust is noticed inside the vehicle, open the windows. Large amounts of exhaust in the vehicle can cause driver drowsiness and an accident, resulting in death or a serious health hazard. Have the vehicle inspected by your Toyota dealer immediately.
- Do not leave the engine running in an area with snow build–up, or where it is snowing. If snowbanks build up around the vehicle while the engine is running, exhaust gases may collect and enter the vehicle. This may lead to death or a serious health hazard.
- When taking a nap in the vehicle, always turn the engine off. Otherwise, you may accidentally move the shift lever or depress the accelerator pedal, which could cause an accident or fire due to engine overheating. Additionally, if the vehicle is parked in a poorly ventilated area, exhaust gases may collect and enter the vehicle, leading to death or a serious health hazard.

Facts about engine oil consumption

FUNCTIONS OF ENGINE OIL

Engine oil has the primary functions of lubricating and cooling the inside of the engine, and plays a major role in maintaining the engine in proper working order.

ENGINE OIL CONSUMPTION

It is normal that an engine should consume some engine oil during normal engine operation. The causes of oil consumption in a normal engine are as follows.

- Oil is used to lubricate pistons, piston rings and cylinders. A thin film of oil is left on the cylinder wall when a piston moves downwards in the cylinder. High negative pressure generated when the vehicle is decelerating sucks some of this oil into the combustion chamber. This oil as well as some part of the oil film left on the cylinder wall is burned by the high temperature combustion gases during the combustion process.
- Oil is also used to lubricate the stems of the intake valves. Some of this oil is sucked into the combustion chamber together with the intake air and is burned along with the fuel. High temperature exhaust gases also burn the oil used to lubricate the exhaust valve stems.

The amount of engine oil consumed depends on the viscosity of the oil, the quality of the oil and the conditions the vehicle is driven under.

More oil is consumed by high–speed driving and frequent acceleration and deceleration.

A new engine consumes more oil, since its pistons, piston rings and cylinder walls have not become conditioned.

Oil consumption: Max. 1.0 L per 1000 km (1.1 qt./600 miles, 0.9 Imp. qt./600 miles)

When judging the amount of oil consumption, note that the oil may become diluted and make it difficult to judge the true level accurately.

As an example, if a vehicle is used for repeated short trips, and consumes a normal amount of oil, the dipstick may not show any drop in the oil level at all, even after 1000 km (600 miles) or more. This is because the oil is gradually becoming diluted with fuel or moisture, making it appear that the oil level has not changed.

The diluting ingredients evaporate out when the vehicle is then driven at high speeds, as on an expressway, making it appear that oil is excessively consumed after driving at high speeds.

IMPORTANCE OF ENGINE OIL LEVEL CHECK

One of the most important points in proper vehicle maintenance is to keep the engine oil at the optimum level so that oil function will not be impaired. Therefore, it is essential that the oil level be checked regularly. Toyota recommends that the oil level be checked every time you refuel the vehicle.

NOTICE
Failure to check the oil level regularly could lead to serious engine trouble due to insufficient oil.

For detailed information on oil level check, see “Checking the engine oil level” on page 404 in Section 7–2.

Iridium–tipped spark plugs (2.4 L 4–cylinder [2AZ–FE] engine)

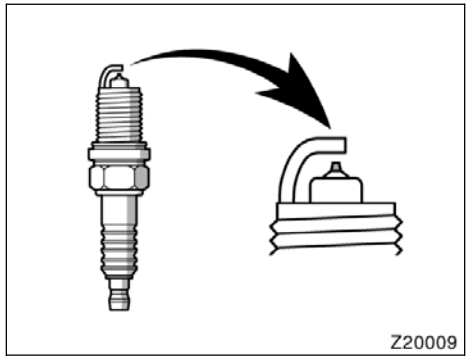

Your engine is fitted with iridium–tipped spark plugs.

NOTICE
Use only iridium–tipped spark plugs. Do not adjust gaps for engine performance or smooth driveability.

Iridium–tipped spark plugs (3.5 L V6 [2GR–FE] engine)

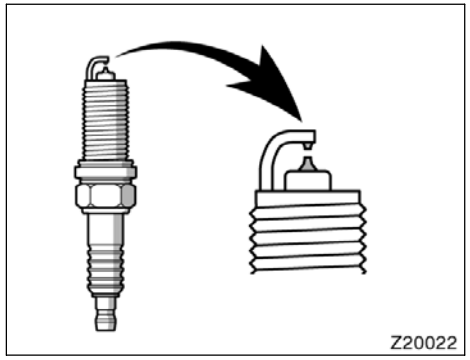

Your engine is fitted with iridium–tipped spark plugs.

NOTICE
Use only Toyota genuine iridium–tipped spark plugs. Do not adjust gaps for engine performance or smooth driveability.

For details about the spark plug type, see “Service specifications” on page 429 in Section 8.

Brake system

The tandem master cylinder brake system is a hydraulic system with two separate sub–systems. If either sub–system should fail, the other will still work. However, the pedal will be harder to press, and your stopping distance will increase. Also, the brake system warning light may come on.

⚠ CAUTION
Do not drive your vehicle with only a single brake system. Have your brakes fixed immediately.

BRAKE BOOSTER

The brake booster uses engine vacuum to power–assist the brakes. If the engine should quit while you are driving, you can bring the vehicle to a stop with normal pedal pressure. There is enough reserved vacuum for one or two stops—but no more!

CAUTION

- **Do not pump the brake pedal if the engine stalls. Each push on the pedal uses up your reserved vacuum.**
- **Even if the power assist is completely lost, the brakes will still work. But you will have to push the pedal hard, much harder than normal. And your braking distance will increase.**

ANTI–LOCK BRAKE SYSTEM

The anti–lock brake system is designed to help prevent lock–up of the wheels during a sudden braking or braking on slippery road surfaces. This assists in providing directional stability and steering performance of the vehicle under these circumstances.

Effective way to press the ABS brake pedal: When the anti–lock brake system function is in action, you may feel the brake pedal pulsating and hear a noise. In this situation, to let the anti–lock brake system work for you, just hold the brake pedal down more firmly. Do not pump the brake in a panic stop. This will result in reduced braking performance.

The anti–lock brake system becomes operative after the vehicle has accelerated to a speed in excess of approximately 10 km/h (6 mph). It stops operating when the vehicle decelerates to a speed below approximately 5 km/h (3 mph).

Depressing the brake pedal on slippery road surfaces such as on a manhole cover, a steel plate at a construction site, joints in a bridge, etc. on a rainy day tends to activate the anti–lock brake system.

A sound may be heard from the engine compartment for a few seconds when the engine is started or just after the vehicle begins to move. This means that the anti–lock brake system is in the self–check mode. This sound does not indicate a malfunction.

When the anti–lock brake system is activated, the following conditions may occur. They do not indicate a malfunction of the system:

- You may hear the anti–lock brake system operating and feel the brake pedal pulsating and the vibrations of the vehicle body and steering wheel. You may also hear the motor sound in the engine compartment even after the vehicle is stopped.
- At the end of the anti–lock brake system activation, the brake pedal may move a little forward.

⚠ CAUTION

Do not overestimate the anti-lock brake system: Although the anti-lock brake system assists in providing vehicle control, it is still important to drive with all due care and maintain a moderate speed and safe distance from the vehicle in front of you, because there are limits to the vehicle stability and effectiveness of steering wheel operation even with the anti-lock brake system on.

If tire grip performance exceeds its capability, or if hydroplaning occurs during high speed driving in the rain, the anti-lock brake system does not provide vehicle control.

Anti-lock brake system is not designed to shorten the stopping distance: Always drive at a moderate speed and maintain a safe distance from the vehicle in front of you. Compared with vehicles without an anti-lock brake system, your vehicle may require a longer stopping distance in the following cases:

- **Driving on rough, gravel or snow-covered roads.**
- **Driving with tire chains installed.**
- **Driving over the steps such as the joints on the road.**
- **Driving on roads where the road surface is pitted or has other differences in surface height.**

Install all 4 tires of specified size at appropriate pressure: The anti-lock brake system detects vehicle speeds using the speed sensors for respective wheels’ turning speeds. The use of tires other than specified may fail to detect the accurate turning speed resulting in a longer stopping distance.

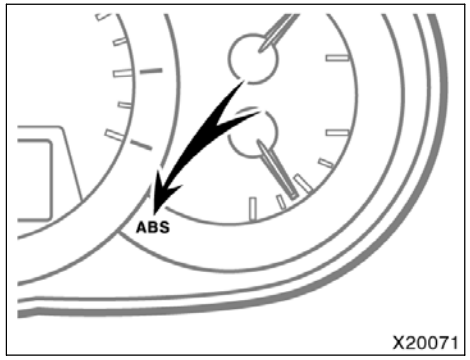

For the U.S.A.

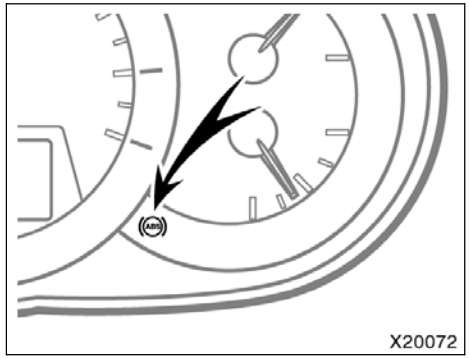

For Canada

“ABS” warning light

The light comes on when the engine switch is turned to the “ON” position. If the anti–lock brake system and the brake assist system work properly, the light turns off after a few seconds. Thereafter, if the system malfunctions, the light comes on again.

When the “ABS” warning light is on (and the brake system warning light is off), the following systems do not operate, but the brake system still operates conventionally.

- Anti–lock brake system
- Brake assist system
- Traction control system
- “AUTO LSD” system
- Enhanced vehicle stability control system
- Downhill assist control system
- Hill–start assist control system

When the “ABS” warning light is on (and the brake system warning light is off), the anti–lock brake system does not operate so that the wheels could lock up during a sudden braking or braking on slippery road surfaces.

If either of the following conditions occurs, this indicates a malfunction somewhere in the components monitored by the warning light. Contact your Toyota dealer as soon as possible to service the vehicle.

- The light does not come on when the engine switch is turned to the “ON” position, or remains on.
- The light comes on while you are driving.

A warning light turning on briefly during operation does not indicate a problem.

CAUTION

If the “ABS” warning light remains on together with the brake system warning light, immediately stop your vehicle at a safe place and contact your Toyota dealer.

In this case, not only the anti–lock brake system will fail but also the vehicle will become extremely unstable during braking.

DRUM–IN–DISC TYPE PARKING BRAKE SYSTEM

Your vehicle has a drum–in–disc type parking brake system. This type of brake system needs bedding–down of the brake shoes periodically or whenever the parking brake shoes and/or drums are replaced.

Have your Toyota dealer perform the bedding–down.

BRAKE ASSIST SYSTEM

When you slam the brakes on, the brake assist system judges as an emergency stop and provides more powerful braking for a driver who cannot hold down the brake pedal firmly.

When you slam the brakes on, more powerful braking will be applied. At this time, you may hear a sound in the engine compartment and feel the vibrations of the brake pedal. This does not indicate a malfunction.

The brake assist system becomes operative after the vehicle has accelerated to a speed in excess of approximately 10 km/h (6 mph). It stops operating when the vehicle decelerates to a speed below approximately 5 km/h (3 mph).

For an explanation of this system’s warning light, see “Service reminder indicators and warning buzzers” on page 129 in Section 1–6.

Brake pad wear limit indicators

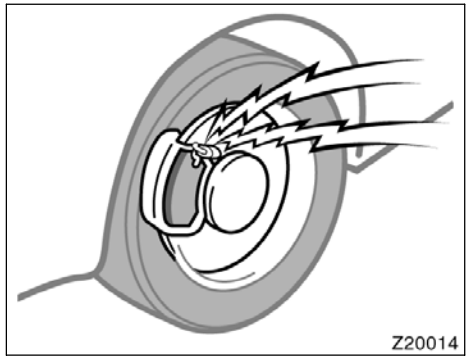

The brake pad wear limit indicators on your disc brakes give a warning noise when the brake pads are worn to where replacement is required.

If you hear a squealing or scraping noise while driving, have the brake pads checked and replaced by your Toyota dealer as soon as possible. Expensive rotor damage can result if the pads are not replaced when necessary.

Electric power steering system

The electric power steering system, using an electric motor, assists the turning of the steering wheel.

In the following cases, you may feel the steering becomes heavy. However, the electric power steering system warning light does not come on. (Because it is not a malfunction.)

- When maneuvering or turning frequently over a long time

  The power steering effect will be reduced to prevent the system from overheating. Avoid turning the steering wheel, or stop the vehicle and turn the engine switch to the “ACC” or “LOCK” position. The system will become cool in about 10 minutes.

NOTICE
Frequent maneuvering and turning over a long time may cause damage to the system in which the mechanism prevents overheating of the electric power steering system.

- When the battery is discharged

  Check the battery’s condition. If necessary, recharge or replace the battery. For details, see “Checking battery condition” on page 418 in Section 7–3.

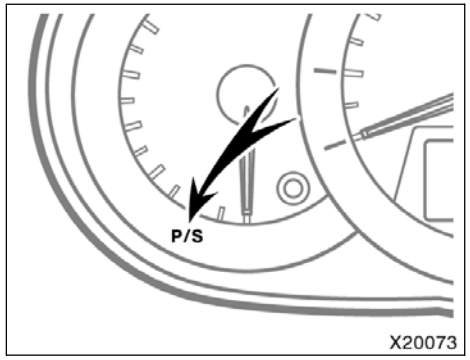

Electric power steering system warning light

The light comes on when the engine switch is turned to the “ON” position. If the electric power steering system works properly, the light turns off after a few seconds. If the system has malfunctions, the light comes on again.

If the following conditions occur, this indicates a malfunction somewhere in the components monitored by the warning light system. Contact your Toyota dealer as soon as possible to service the vehicle.

- The light does not come on when the engine switch is turned to the “ON” position or remains on.
- The light stays on while you are driving.

⚠ CAUTION

If the electric power steering system warning light comes on, take your vehicle to your Toyota dealer as soon as possible. In this case, more effort is required for the steering wheel to turn than usual. Drive your vehicle while firmly gripping the steering wheel.

INFORMATION

When the steering wheel is turned, a motor operating sound (whining sound) may be heard. This occurs when the power steering motor works and is not defective.

Rear step bumper

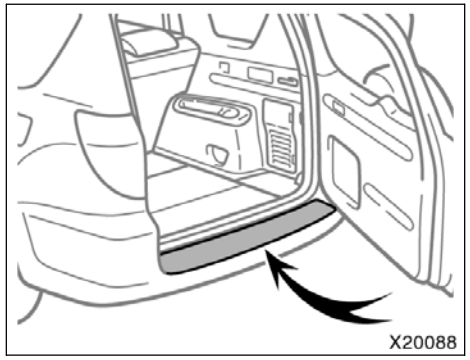

The rear step bumper is for rear end protection and easier step–up loading.

To get on the rear step bumper, use the shaded area between the arrows in the illustration.

CAUTION

- **Do not allow more than one person to get on the rear step bumper at a time. It is designed for only one person.**
- **Never drive the vehicle with anyone on the rear step bumper.**

Your Toyota’s identification——Vehicle identification number

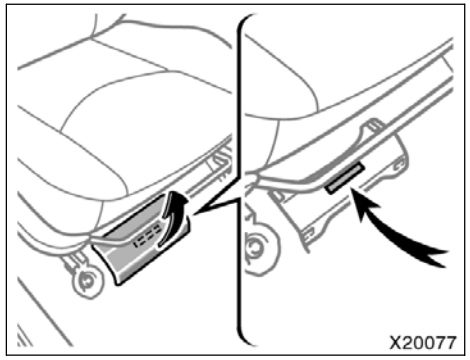

Under the right front seat

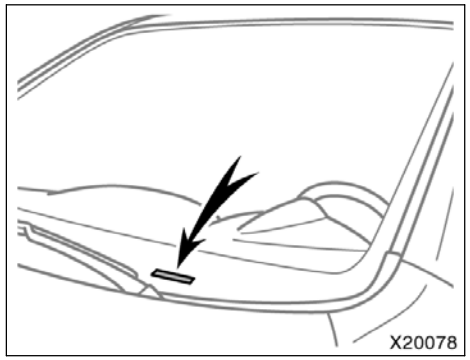

Top left of the instrument panel

The vehicle identification number (VIN) is the legal identifier for your vehicle. This number is stamped under the right front seat and top left of the instrument panel where it can be seen through the windshield from the outside.

This is the primary identification number for your Toyota. It is used in registering the ownership of your vehicle.

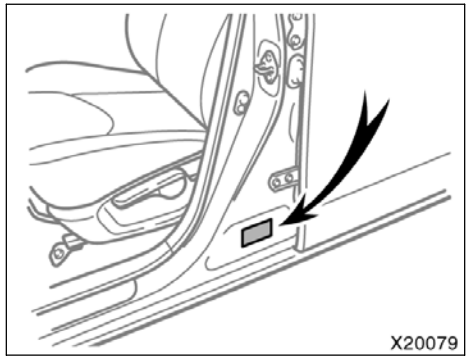

The vehicle identification number (VIN) is also on the Certification Label.

—Engine number

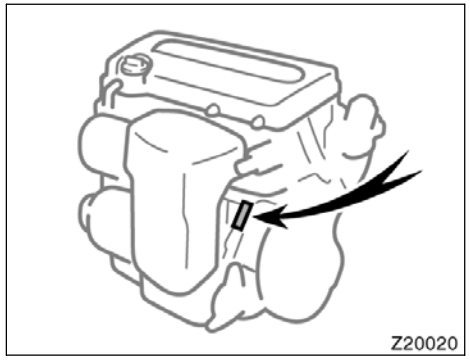

2.4 L 4-cylinder (2AZ-FE) engine

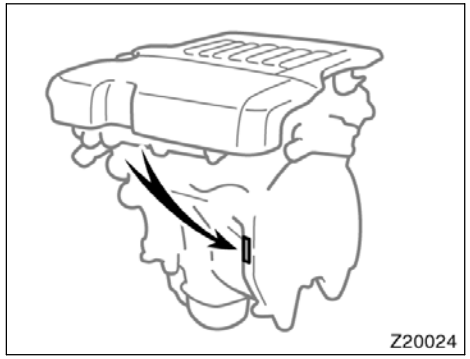

3.5 L V6 (2GR-FE) engine

The engine number is stamped on the engine block as shown.

Theft prevention labels (except for Canada)

Your new vehicle carries theft prevention labels which are approximately 47 mm (1.85 in.) by 12 mm (0.47 in.).

The purpose of these labels is to reduce the incidence of vehicle thefts by facilitating the tracing and recovery of parts from stolen vehicles. The label is designed so that once it is applied to a surface, any attempt to remove it will result in destroying the integrity of the label. Transferring these labels intact from one part to another, will be impossible.

NOTICE

You should not attempt to remove the theft prevention labels as it may violate certain state or federal laws.

Suspension and chassis

CAUTION

Do not modify the suspension/chassis with lift kits, spacers, springs, etc. It can cause dangerous handling characteristics, resulting in loss of control.

Tire information—
—Tire symbols

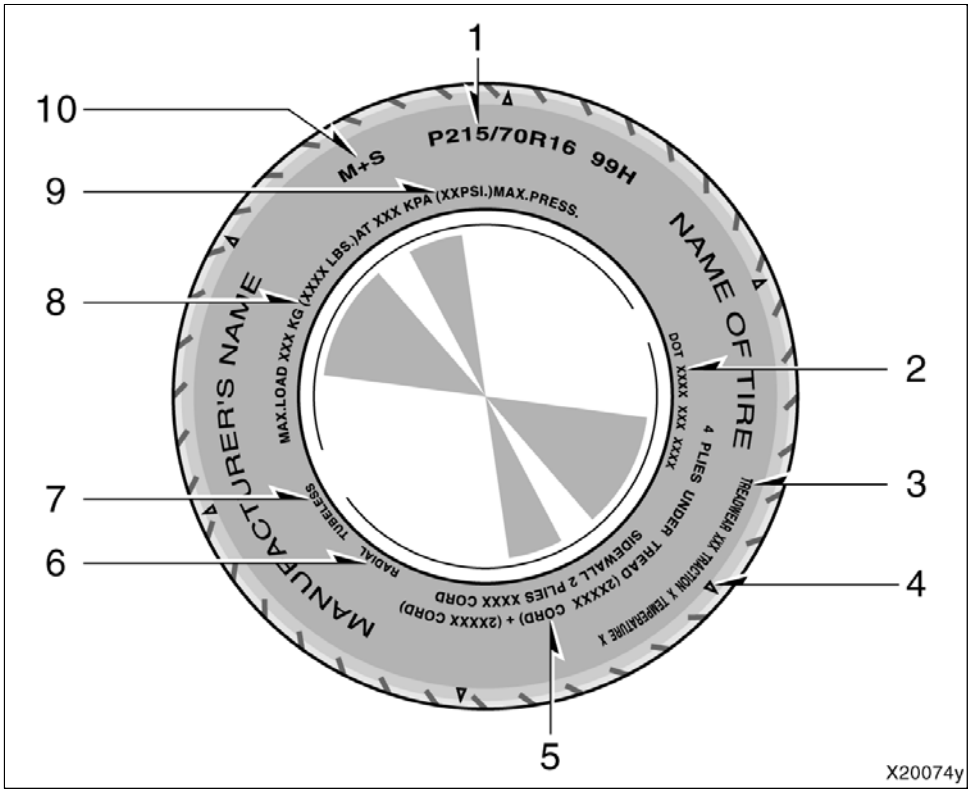

This illustration indicates typical tire symbols.

1. **Tire size—**For details, see “—Tire size” on page 326.
2. **DOT and Tire Identification Number (TIN)—**For details, see “—DOT and Tire Identification Number (TIN)” on page 325.
3. **Uniform tire quality grading—**For details, see “—Uniform tire quality grading” that follows.
4. **The location of the treadwear indicators—**For details, see “Checking and replacing tires” on page 410.
5. **Tire ply composition and materials—**Plies mean a layer of rubber–coated parallel cords. Cords mean the strands forming the plies in the tire.
6. **Radial tire or bias–ply tires—**A radial tire has “RADIAL” on the sidewall. A tire not marked with “RADIAL” is a bias–ply tire.

7. **“TUBELESS” or “TUBE TYPE”—**A tubeless tire does not have a tube inside the tire and air is directly filled in the tire. A tube type tire has a tube inside the tire and the tube maintains the air pressure.
8. **Load limit at maximum cold tire inflation pressure—**For details, see “Checking and replacing tires” on page 410.
9. **Maximum cold tire inflation pressure—**This means the pressure to which a tire may be inflated. For details about recommended cold tire inflation pressure, see “Tires” on page 433.
10. **Summer tire or all season tire—**An all season tire has “M+S” on the sidewall. The tire not marked with “M+S” is a summer tire. For details, see “Types of tires” on page 338.

—DOT and Tire Identification Number (TIN)

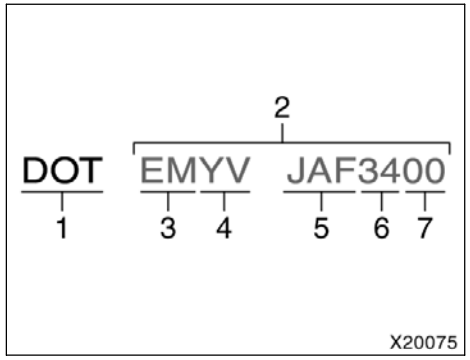

This illustration indicates typical DOT and Tire Identification Number (TIN).

1. “DOT” symbol
2. Tire Identification Number (TIN)
3. Tire manufacturer’s identification mark
4. Tire size code
5. Manufacturer’s optional tire type code (3 or 4 letters)
6. Manufacturing week
7. Manufacturing year

The “DOT” symbol certifies that the tire conforms to applicable Federal Motor Vehicle Safety Standards.

—Tire size

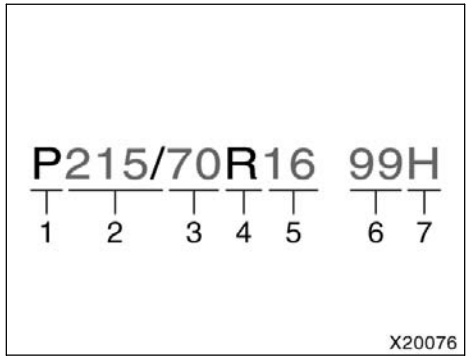

This illustration indicates typical tire size.

1. Tire use (P=Passenger car, T=Temporary use)
2. Section width (in millimeters)
3. Aspect ratio (tire height to section width)
4. Tire construction code (R=Radial, D=Diagonal)
5. Wheel diameter (in inches)
6. Load index (2 digits or 3 digits)
7. Speed symbol (alphabet with one letter)

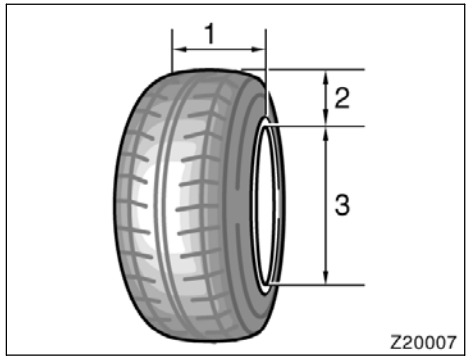

1. Section width
2. Tire height
3. Wheel diameter

—Name of each section of tire

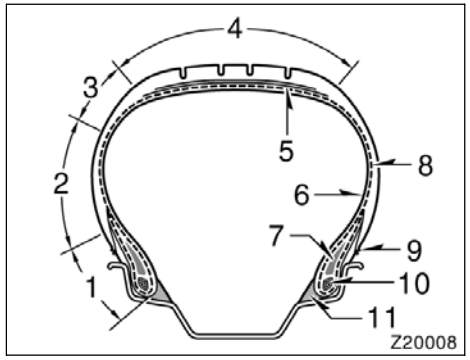

1. Bead
2. Sidewall
3. Shoulder
4. Tread
5. Belt
6. Inner liner
7. Reinforcing rubber
8. Carcass
9. Rim lines
10. Bead wires
11. Chafer

—Uniform tire quality grading

This information has been prepared in accordance with regulations issued by the National Highway Traffic Safety Administration of the U.S. Department of Transportation. It provides the purchasers and/or prospective purchasers of Toyota vehicles with information on uniform tire quality grading.

Your Toyota dealer will help answer any questions you may have as you read this information.

DOT quality grades—All passenger vehicle tires must conform to Federal Safety Requirements in addition to these grades. Quality grades can be found where applicable on the tire sidewall between tread shoulder and maximum section width. For example: Treadwear 200 Traction AA Temperature A

Treadwear—The treadwear grade is a comparative rating based on the wear rate of the tire when tested under controlled conditions on a specified government test course. For example, a tire graded 150 would wear one and a half (1–1/2) times as well on the government course as a tire graded 100. The relative performance of tires depends upon the actual conditions of their use, however, and may depart significantly from the norm due to variations in driving habits, service practices and differences in road characteristics and climate.

Traction AA, A, B, C—The traction grades, from highest to lowest, are AA, A, B, and C, and they represent the tire’s ability to stop on wet pavement as measured under controlled conditions on specified government test surfaces of asphalt and concrete. A tire marked C may have poor traction performance.

Warning: The traction grade assigned to this tire is based on braking (straight ahead) traction tests and does not include cornering (turning) traction.

Temperature A, B, C—The temperature grades are A (the highest), B, and C, representing the tire’s resistance to the generation of heat and its ability to dissipate heat when tested under controlled conditions on a specified indoor laboratory test wheel. Sustained high temperature can cause the material of the tire to degenerate and reduce tire life, and excessive temperature can lead to sudden tire failure. The grade C corresponds to a level of performance which all passenger car tires must meet under the Federal Motor Vehicle Safety Standard No.109. Grades B and A represent higher levels of performance on the laboratory test wheel than the minimum required by law.

Warning: The temperature grades for this tire are established for a tire that is properly inflated and not overloaded. Excessive speed, underinflation, or excessive loading, either separately or in combination, can cause heat buildup and possible tire failure.

—Glossary of tire terminology

Tire related term	Meaning
Cold tire inflation pressure	tire inflation pressure when the vehicle has been parked for at least 3 hours or more, or it has not been driven more than 1.5 km or 1 mile under that condition
Maximum inflation pressure	the maximum cold inflation pressure to which a tire may be inflated and it is shown on the sidewall of the tire
Recommended inflation pressure	cold tire inflation pressure recommended by a manufacturer
Accessory weight	the combined weight (in excess of those standard items which may be replaced) of automatic transmission, power steering, power brakes, power windows, power seats, radio, and heater, to the extent that these items are available as factory–installed equipment (whether installed or not)
Curb weight	the weight of a motor vehicle with standard equipment including the maximum capacity of fuel, oil, and coolant, and, if so equipped, air conditioning and additional weight optional engine
Maximum loaded vehicle weight	the sum of— (a) curb weight; (b) accessory weight; (c) vehicle capacity weight; and (d) production options weight
Normal occupant weight	68 kg (150 lb.) times the number of occupants specified in the second column of Table 1 that follows
Occupant distribution	distribution of occupants in a vehicle as specified in the third column of Table 1 that follows

Tire related term	Meaning
Production options weight	the combined weight of those installed regular production options weighing over 2.3 kg (5 lb.) in excess of those standard items which they replace, not previously considered in curb weight or accessory weight, including heavy duty brakes, ride levelers, roof rack, heavy duty battery, and special trim
Rim	a metal support for a tire or a tire and tube assembly upon which the tire beads are seated
Rim diameter (Wheel diameter)	nominal diameter of the bead seat
Rim size designation	rim diameter and width
Rim type designation	the industry of manufacturer’s designation for a rim by style or code
Rim width	nominal distance between rim flanges
Vehicle capacity weight (Total load capacity)	the rated cargo and luggage load plus 68 kg (150 lb.) times the vehicle’s designated seating capacity
Vehicle maximum load on the tire	the load on an individual tire that is determined by distributing to each axle its share of the maximum loaded vehicle weight and dividing by two
Vehicle normal load on the tire	the load on an individual tire that is determined by distributing to each axle its share of the curb weight, accessory weight, and normal occupant weight (distributed in accordance with Table 1 that follows) and dividing by two
Weather side	the surface area of the rim not covered by the inflated tire
Bead	the part of the tire that is made of steel wires, wrapped or reinforced by ply cords and that is shaped to fit the rim

Tire related term	Meaning
Bead separation	a breakdown of the bond between components in the bead
Bias ply tire	a pneumatic tire in which the ply cords that extend to the beads are laid at alternate angles substantially less than 90 degrees to the centerline of the tread
Carcass	the tire structure, except tread and sidewall rubber which, when inflated, bears the load
Chunking	the breaking away of pieces of the tread or sidewall
Cord	the strands forming the plies in the tire
Cord separation	the parting of cords from adjacent rubber compounds
Cracking	any parting within the tread, sidewall, or innerliner of the tire extending to cord material
CT	a pneumatic tire with an inverted flange tire and rim system in which the rim is designed with rim flanges pointed radially inward and the tire is designed to fit on the underside of the rim in a manner that encloses the rim flanges inside the air cavity of the tire
Extra load tire	a tire designed to operate at higher loads and at higher inflation pressures than the corresponding standard tire
Groove	the space between two adjacent tread ribs
Innerliner	the layer(s) forming the inside surface of a tubeless tire that contains the inflating medium within the tire

Tire related term	Meaning
Innerliner separation	the parting of the innerliner from cord material in the carcass
Intended outboard sidewall	(A) the sidewall that contains a whitewall, bears white lettering or bears manufacturer, brand, and/or model name molding that is higher or deeper than the same molding on the other sidewall of the tire, or (B) the outward facing sidewall of an asymmetrical tire that has a particular side that must always face outward when mounted on a vehicle
Light truck (LT) tire	a tire designated by its manufacturer as primarily intended for use on lightweight trucks or multipurpose passenger vehicles
Load rating	the maximum load that a tire is rated to carry for a given inflation pressure
Maximum load rating	the load rating for a tire at the maximum permissible inflation pressure for that tire
Maximum permissible inflation pressure	the maximum cold inflation pressure to which a tire may be inflated
Measuring rim	the rim on which a tire is fitted for physical dimension requirements
Open splice	any parting at any junction of tread, sidewall, or innerliner that extends to cord material
Outer diameter	the overall diameter of an inflated new tire
Overall width	the linear distance between the exteriors of the sidewalls of an inflated tire, including elevations due to labeling, decorations, or protective bands or ribs

Tire related term	Meaning
Passenger car tire	a tire intended for use on passenger cars, multipurpose passenger vehicles, and trucks, that have a gross vehicle weight rating (GVWR) of 10,000 lb. or less.
Ply	a layer of rubber–coated parallel cords
Ply separation	a parting of rubber compound between adjacent plies
Pneumatic tire	a mechanical device made of rubber, chemicals, fabric and steel or other materials, that, when mounted on an automotive wheel, provides the traction and contains the gas or fluid that sustains the load
Radial ply tire	a pneumatic tire in which the ply cords that extend to the beads are laid at substantially 90 degrees to the centerline of the tread
Reinforced tire	a tire designed to operate at higher loads and at higher inflation pressures than the corresponding standard tire
Section width	the linear distance between the exteriors of the sidewalls of an inflated tire, excluding elevations due to labeling, decoration, or protective bands
Sidewall	that portion of a tire between the tread and bead
Sidewall separation	the parting of the rubber compound from the cord material in the sidewall
Snow tire	a tire that attains a traction index equal to or greater than 110, compared to the ASTM E–1136 Standard Reference Test Tire, when using the snow traction test as described in ASTM F–1805–00, Standard Test Method for Single Wheel Driving Traction in a Straight Line on Snow–and Ice–Covered Surfaces, and which is marked with an Alpine Symbol ( ) on at least one sidewall

Tire related term	Meaning
Test rim	the rim on which a tire is fitted for testing, and may be any rim listed as appropriate for use with that tire
Tread	that portion of a tire that comes into contact with the road
Tread rib	a tread section running circumferentially around a tire
Tread separation	pulling away of the tread from the tire carcass
Treadwear indicators (TWI)	the projections within the principal grooves designed to give a visual indication of the degrees of wear of the tread
Wheel–holding fixture	the fixture used to hold the wheel and tire assembly securely during testing

Table 1—Occupant loading and distribution for vehicle normal load for various designated seating capacities

Designated seating capacity, number of occupants	Vehicle normal load, number of occupants	Occupant distribution in a normally loaded vehicle
2 through 4	2	2 in front
5 through 10	3	2 in front, 1 in second seat
11 through 15	5	2 in front, 1 in second seat, 1 in third seat, 1 in fourth seat
16 through 20	7	2 in front, 2 in second seat, 2 in third seat, 1 in fourth seat

Vehicle load limits

Vehicle load limits include total load capacity, seating capacity, towing capacity and cargo capacity. Follow the load limits shown below. Total load capacity and seating capacity are also described on the tire and loading information label. For location of the tire and loading information label, see “Checking tire inflation pressure” on page 408.

Total load capacity:

Without third seat
375 kg (825 lb.)

With third seat
525 kg (1155 lb.)

Total load capacity means combined weight of occupants, cargo and luggage. Tongue load is included when trailer towing.

Seating capacity:

Without third seat
Total 5 (Front 2, Rear 3)

With third seat
Total 7 (Front 2, Rear 5)

Seating capacity means the maximum number of occupants whose estimated average weight is 68 kg (150 lb.) per person. Depending on the weight of each person, the seating capacity given may exceed the total load capacity.

NOTICE

Even if the number of occupants are within the seating capacity, do not exceed the total load capacity.

Towing capacity:

2.4 L 4–cylinder (2AZ–FE) engine
680 kg (1500 lb.)

3.5 L V6 (2GR–FE) engine
Without towing package
907 kg (2000 lb.)
With towing package
1588 kg (3500 lb.)

Towing capacity means the maximum gross trailer weight (trailer weight plus its cargo weight) that your vehicle is able to tow.

Cargo capacity

Cargo capacity may increase or decrease depending on the size (weight) and the number of occupants. For details, see “Capacity and distribution” that follows.

⚠ CAUTION

Do not apply the load more than each load limit. That may cause not only damage to the tires, but also deterioration to the steering ability and braking ability, which may cause an accident.

Cargo and luggage—
—Stowage precautions

When stowing cargo and luggage in the vehicle, observe the following:

- Put cargo and luggage in the luggage compartment when at all possible. Be sure all items are secured in place.
- Be careful to keep the vehicle balanced. Locating the weight as far forward as possible helps maintain balance.
- For better fuel economy, do not carry unneeded weight.

⚠ CAUTION

- **To prevent cargo and luggage from sliding forward during braking, do not stack anything in the luggage compartment higher than the seatbacks. Keep cargo and luggage low, as close to the floor as possible.**

- **Never allow anyone to ride in the luggage compartment. It is not designed for passengers. They should ride in their seats with their seat belts properly fastened. Otherwise, they are much more likely to suffer death or serious bodily injury, in the event of sudden braking or a collision.**
- **Do not place anything on the flattened seat, or it may slide forward during braking.**
- **Do not place anything on the luggage cover. Such items may be thrown about and possibly injure people in the vehicle during sudden braking or an accident. Secure all items in a safe place.**

- **To prevent cargo and luggage from sliding forward during braking, do not place anything on the net higher than the rear seatbacks. Otherwise, such items may be thrown about and possibly injure people in the vehicle during sudden braking or an accident.**
- **Do not drive with objects left on top of the instrument panel. They may interfere with the driver’s field of view. Or they may move during sharp vehicle acceleration or turning, and impair the driver’s control of the vehicle. In an accident they may injure the vehicle occupants.**

—Capacity and distribution

Cargo capacity depends on the total weight of the occupants.

(Cargo capacity) = (Total load capacity) – (Total weight of occupants)

Steps for Determining Correct Load Limit—

(1) Locate the statement “The combined weight of occupants and cargo should never exceed XXX kg or XXX lbs.” on your vehicle’s placard.

(2) Determine the combined weight of the driver and passengers that will be riding in your vehicle.

(3) Subtract the combined weight of the driver and passengers from XXX kg or XXX lbs.

(4) The resulting figure equals the available amount of cargo and luggage load capacity. For example, if the “XXX” amount equals 1400 lbs. and there will be five 150 lb passengers in your vehicle, the amount of available cargo and luggage load capacity is 650 lbs. (1400–750 (5x150)=650 lbs.)

(5) Determine the combined weight of luggage and cargo being loaded on the vehicle. That weight may not safely exceed the available cargo and luggage load capacity calculated in Step 4.

(6) If your vehicle will be towing a trailer, load from your trailer will be transferred to your vehicle. Consult this manual to determine how this reduces the available cargo and luggage load capacity of your vehicle.

For details about trailer towing, see page 348.

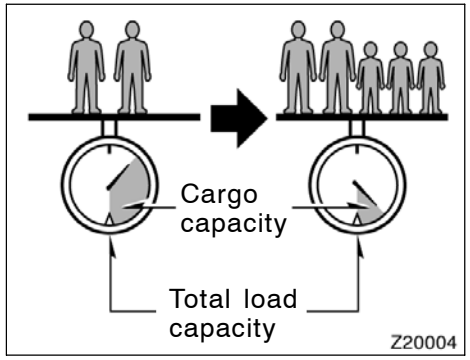

Example on Your Vehicle

In case that 2 people with the combined weight of 166 kg (366 lb.) are riding in your vehicle, the available amount of cargo and luggage load capacity will be as follows:

Without third seat
Total load capacity: 375 kg (825 lb.)
375 kg – 166 kg = 209 kg.
(825 lb. – 366 lb. = 459 lb.)

With third seat
Total load capacity: 525 kg (1155 lb.)
525 kg – 166 kg = 359 kg.
(1155 lb. – 366 lb. = 789 lb.)

From this condition, if 3 more passengers with the combined weight of 176 kg (388 lb.) get on, the available cargo and luggage load will be reduced as follows:

Without third seat
209 kg – 176 kg = 33 kg.
(459 lb. – 388 lb. = 71 lb.)

With third seat
359 kg – 176 kg = 183 kg.
(789 lb. – 388 lb. = 401 lb.)

As shown in the above example, if the number of occupants increases, the cargo and luggage load equaling the combined weight of occupants who got on later must be reduced. In other words, if the increase in the number of occupants causes the excess of the total load capacity (combined weight of occupants plus cargo and luggage load), you have to reduce the cargo and luggage on your vehicle.

For details about total load capacity, see “Vehicle load limits” on page 335.

⚠ CAUTION

Even if the total load of occupant’s weight and the cargo load is less than the total load capacity, do not apply the load unevenly. That may cause not only damage to the tire but also deterioration to the steering ability due to unbalance of the vehicle, causing an accident.

Types of tires

Determine what kind of tires your vehicle is originally equipped with.

1. Summer tires

Summer tires are high–speed capability tires best suited to highway driving under dry conditions.

Since summer tires do not have the same traction performance as snow tires, summer tires are inadequate for driving on snow–covered or icy roads. For driving on snow–covered or icy roads, we recommend using snow tires. If installing snow tires, be sure to replace all four tires.

2. All season tires

All season tires are designed to provide better traction in snow and to be adequate for driving in most winter conditions, as well as for use all year round.

All season tires, however, do not have adequate traction performance compared with snow tires in heavy or loose snow. Also, all season tires fall short in acceleration and handling performance compared with summer tires in highway driving.

The details about how to distinguish summer tires from all season tires are described on page 324.

⚠ CAUTION

- **Do not mix summer and all season tires on your vehicle as this can cause dangerous handling characteristics, resulting in loss of control.**
- **Do not use tire other than the manufacturer’s designated tires, and never mix tires or wheels of the sizes different from the originals.**

SECTION 3

STARTING AND DRIVING

Starting and driving

Before starting the engine 342
How to start the engine 342
Tips for driving in various conditions 343
Driving in the rain 344
Off–road driving precautions 345
Winter driving tips 346
Dinghy towing 347
Trailer towing 348
How to save fuel and make your vehicle last longer 353

Before starting the engine

1. Check the area around the vehicle before entering it.
2. Adjust seat position, seatback angle, seat cushion height, head restraint height, steering wheel angle and steering column length.
3. Adjust the inside and outside rear view mirrors.
4. Lock all doors.
5. Fasten seat belts.

How to start the engine— (a) Before cranking

1. Apply the parking brake firmly.
2. Turn off unnecessary lights and accessories.
3. Put the selector lever in “P”. If you need to restart the engine while the vehicle is moving, put the selector lever in “N”. A starter safety device will prevent the starter from operating if the selector lever is in any drive position.
4. Depress the brake pedal and hold it to the floor until driving off.

(b) Starting the engine

Before starting the engine, be sure to follow the instructions in “(a) Before cranking”.

Normal starting procedure

The multiport fuel injection system/sequential multiport fuel injection system in your engine automatically controls the proper air–fuel mixture for starting. You can start a cold or hot engine as follows:

With your foot off the accelerator pedal, crank the engine by turning the engine switch to the “START” position. Release it when the engine starts.

Engine should be warmed up by driving, not in idle. For warming up, drive with smoothly turning engine until engine coolant temperature is within normal range.

If the engine stalls...

Simply restart it, using the correct procedure given in normal starting.

If the engine will not start...

See “If your vehicle will not start” on page 356 in Section 4.

NOTICE

- ***Do not crank for more than 30 seconds at a time. This may overheat the starter and wiring systems.***
- ***Do not race a cold engine.***
- ***If the engine becomes difficult to start or stalls frequently, have the engine checked immediately.***

Tips for driving in various conditions

- Always slow down in gusty crosswinds. This will allow you much better control.
- Drive slowly onto curbs and, if possible, at a right angle. Avoid driving onto high, sharp–edged objects and other road hazards. Failure to do so can lead to severe tire damage such as a tire burst.

  Drive slowly when passing over bumps or travelling on a bumpy road. Otherwise the impact could cause severe damage to the tires and/or wheels.
- When parking on a hill, turn the front wheels until they touch the curb so that the vehicle will not roll. Apply the parking brake, and place the transmission in “P”. If necessary, block the wheels.
- Washing your vehicle or driving through deep water may get the brakes wet. To see whether they are wet, check that there is no traffic near you, and then press the pedal lightly. If you do not feel a normal braking force, the brakes are probably wet. To dry them, drive the vehicle cautiously while lightly pressing the brake pedal with the parking brake applied. If they still do not work safely, pull to the side of the road and call a Toyota dealer for assistance.

⚠ CAUTION

- **Before driving off, make sure that the parking brake is fully released and the parking brake reminder light is off.**
- **Do not leave your vehicle unattended while the engine is running.**
- **Do not rest your foot on the brake pedal while driving. It can cause dangerous overheating, needless wear, and poor fuel economy.**
- **To drive down a long or steep hill, reduce your speed and downshift. Remember, if you ride the brakes excessively, they may overheat and not work properly.**
- **Be careful when accelerating, upshifting, downshifting or braking on a slippery surface. Sudden acceleration or engine braking, could cause the vehicle to skid or spin.**

- **Do not drive in excess of the speed limit. Even if the legal speed limit permits it, do not drive over 140 km/h (85 mph) unless your vehicle has high–speed capability tires. Driving over 140 km/h (85 mph) may result in tire failure, loss of control and possible injury. Be sure to consult a tire dealer to determine whether the tires on your vehicle are high–speed capability tires or not before driving at such speeds.**
- **Do not continue normal driving when the brakes are wet. If they are wet, your vehicle will require a longer stopping distance, and it may pull to one side when the brakes are applied. Also, the parking brake will not hold the vehicle securely.**

Driving in the rain

Driving on a slippery road surface

Drive carefully when it is raining, because visibility will be reduced, the windows may become fogged–up, and the road will be slippery.

- Drive carefully when it starts to rain, because the road surface will be especially slippery.
- Refrain from high speeds when driving on an expressway in the rain, because there may be a layer of water between the tires and the road surface, preventing the steering and brakes from operating properly.

⚠ CAUTION

- **Sudden braking, acceleration and steering when driving on a slippery road surface may cause tire slippage and reduce your ability to control the vehicle, resulting in an accident.**
- **Sudden changes in engine speed, such as sudden engine braking, may cause the vehicle to skid, resulting in an accident.**
- **After driving through a puddle, lightly depress the brake pedal to make sure that the brakes are functioning properly. Wet brake pads may prevent the brakes from functioning properly. If the brakes on only one side are wet and not functioning properly, steering control may be affected, resulting in an accident.**

When encountering flooded roads

Do not drive on a road that has flooded after heavy rain etc. Doing so may cause serious damage to the vehicle.

NOTICE

Driving on a flooded road may cause the engine to stall as well as cause serious vehicle malfunctions such as shorts in electrical components and engine damage from water immersion. In the event that you drive on a flooded road and the vehicle is flooded, be sure to have your Toyota dealer check brake function, changes in quantity and quality of oil and fluid used for the engine, transaxle, transfer (four–wheel drive models), differential, etc. and lubricant condition for the propeller shaft (four–wheel drive models), bearings and suspension joints (where possible) and the function of all joints and bearings.

Off–road driving precautions

When driving your vehicle off–road, please observe the following precautions to ensure your driving enjoyment and to help prevent the closure of areas to off–road vehicles.

a. Drive your vehicle only in areas where off–road vehicles are permitted to travel.

b. Respect private property. Get owner’s permission before entering private property.

c. Do not enter areas that are closed. Honor gates, barriers and signs that restrict travel.

d. Stay on established roads. When conditions are wet, driving techniques should be changed or travel delayed to prevent damage to roads.

For owners in U.S. mainland, Hawaii and Puerto Rico:

To obtain additional information pertaining to driving your vehicle off–road, consult the following organizations.

- State and Local Parks and Recreation Departments
- State Motor Vehicle Bureau
- Recreational Vehicle Clubs
- U.S. Forest Service and Bureau of Land Management

CAUTION

Always observe the following precautions to minimize the risk of death or serious personal injury or damage to your vehicle:

- **Drive carefully when off the road. Do not take unnecessary risks by driving in dangerous places.**
- **Do not grip the steering wheel spokes when driving off–road. A bad bump could jerk the wheel and injure your hands. Keep both hands and especially your thumbs on the outside of the rim.**
- **Always check your brakes for effectiveness immediately after driving in sand, mud, water or snow.**
- **After driving through tall grass, mud, rock, sand, water, etc., check that there is no grass, bush, paper, rags, stone, sand, etc. adhering or trapped on the underbody. Clear off any such matter from the underbody. If the vehicle is used with these materials trapped or adhering to the underbody, a breakdown or fire could occur.**

- **In a rollover crash, an unbelted person is significantly more likely to die than a person wearing a seat belt. Therefore, the driver and all passengers should fasten their seat belts whenever the vehicle is moving.**
- **When driving off–road or in rugged terrain, do not drive at excessive speeds, jump, make sharp turns, strike objects, etc. This may cause loss of control or vehicle rollover causing death or serious injury. You are also risking expensive damage to your vehicle’s suspension and chassis.**

NOTICE

◆***If driving through water, such as when crossing shallow streams, first check the depth of the water and the bottom of the stream for firmness. Drive slowly and avoid deep water.***

◆***Take all necessary safety measures to ensure that water damage to the engine or other components does not occur.***

Water entering the engine air intake will cause severe engine damage.

Water entering the automatic transmission will cause deterioration in shift quality, looking up of your transmission accompanied by vibration, and ultimately damage.

Water can wash the grease from wheel bearings, causing rusting and premature failure, and may also enter the differentials, transmission and transfer case, reducing the gear oil’s lubricating qualities.

◆***Sand and mud that has accumulated around brake discs may affect braking efficiency and may damage brake system components.***

◆***Always perform a maintenance inspection after each day of off–road driving that has taken you through rough terrain, sand, mud, or water. For scheduled maintenance information, refer to the “Scheduled Maintenance Guide” or “Owner’s Manual Supplement”.***

Winter driving tips

Make sure your coolant is properly protected against freezing.

Only use “Toyota Super Long Life Coolant” or similar high quality ethylene glycol based non–silicate, non–amine, non–nitrite, and non–borate coolant with long–life hybrid organic acid technology. (Coolant with long–life hybrid organic acid technology is a combination of low phosphates and organic acids.)

See “Checking the engine coolant level” on page 406 in Section 7–2 for details of coolant type selection.

For the U.S.A.—“Toyota Super Long Life Coolant” is a mixture of 50% coolant and 50% deionized water. This coolant provides protection down to about –35°C (–31°F).

For Canada—“Toyota Super Long Life Coolant” is a mixture of 55% coolant and 45% deionized water. This coolant provides protection down to about –42°C (–44°F).

NOTICE

Do not use plain water alone.

Check the condition of the battery and cables.

Cold temperatures reduce the capacity of any battery, so it must be in top shape to provide enough power for winter starting. Section 7–3 tells you how to visually inspect the battery. Your Toyota dealer and most service stations will be pleased to check the level of charge.

Make sure the engine oil viscosity is suitable for the cold weather.

See page 404 in Section 7–2 for recommended viscosity. Leaving a heavy summer oil in your vehicle during winter months may cause harder starting. If you are not sure about which oil to use, call your Toyota dealer–they will be pleased to help.

Keep the door locks from freezing.

Squirt lock de–icer or glycerine into the locks to keep them from freezing.

Use a washer fluid containing an antifreeze solution.

This product is available at your Toyota dealer and most auto parts stores. Follow the manufacturer’s directions for how much to mix with water.

NOTICE

Do not use engine antifreeze or any other substitute because it may damage your vehicle’s paint.

Do not use your parking brake when there is a possibility it could freeze.

When parking, put the transmission into “P” and block the rear wheels. Do not use the parking brake, or snow or water accumulated in and around the parking brake mechanism may freeze, making it hard to release.

Keep ice and snow from accumulating under the fenders.

Ice and snow built up under your fenders can make steering difficult. During bad winter driving, stop and check under the fenders occasionally.

Depending on where you are driving, we recommend you carry some emergency equipment.

Some of the things you might put in the vehicle are tire chains, window scraper, bag of sand or salt, flares, small shovel, jumper cables, etc.

Dinghy towing

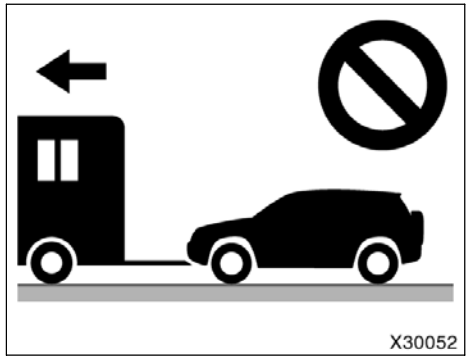

Your vehicle is not designed to be dinghy towed (with four wheels on the ground) behind a motorhome.

NOTICE

Do not tow your vehicle with four wheels on the ground. This may cause serious damage to your vehicle.

Trailer towing

Your vehicle is designed primarily as a passenger–carrying vehicle. Towing a trailer will have an adverse effect on handling, performance, braking, durability and driving economy (fuel consumption, etc.). Your safety and satisfaction depend on the proper use of correct equipment and cautious driving habits. For your safety and the safety of others, you must not overload your vehicle or trailer. Toyota warranties do not apply to damage or malfunction caused by towing a trailer for commercial purposes. Ask your local Toyota dealer for further details before towing.

NOTICE

When towing a trailer, be sure to consult your Toyota dealer for further information on additional requirements such as a towing kit, etc.

WEIGHT LIMITS

Before towing, make sure the total trailer weight, gross combination weight, gross vehicle weight, gross axle weight and trailer tongue load are all within the limits.

The total trailer weight and tongue load can be measured with platform scales found at a highway weighing station, building supply company, trucking company, junk yard, etc.

⚠ CAUTION

- **The total trailer weight (trailer weight plus its cargo load) must not exceed the following. Exceeding this weight is dangerous.**

  2.4 L 4–cylinder (2AZ–FE) engine
  680 kg (1500 lb.)
  3.5 L V6 (2GR–FE) engine
  Without towing package
  907 kg (2000 lb.)
  With towing package
  1588 kg (3500 lb.)

  If towing a trailer and cargo weighing over 907 kg (2000 lb.), it is necessary to use a sway control device with sufficient capacity.

- **The gross combination weight (sum of your vehicle weight plus its load and the total trailer weight) must not exceed the following.**

  2.4 L 4–cylinder (2AZ–FE) engine
  Two–wheel drive models
  Without third seat
  2689 kg (5930 lb.)
  With third seat
  2825 kg (6230 lb.)
  Four–wheel drive models
  Without third seat
  2737 kg (6035 lb.)
  With third seat
  2887 kg (6365 lb.)

  3.5 L V6 (2GR–FE) engine
  Two–wheel drive models
  Without third seat
  Without towing package
  3048 kg (6720 lb.)
  With towing package
  3729 kg (8220 lb.)
  With third seat
  Without towing package
  3182 kg (7015 lb.)
  With towing package
  3862 kg (8515 lb.)

Four–wheel drive models
Without third seat
Without towing package
2994 kg (6600 lb.)
With towing package
3674 kg (8100 lb.)
With third seat
Without towing package
3128 kg (6895 lb.)
With towing package
3808 kg (8395 lb.)

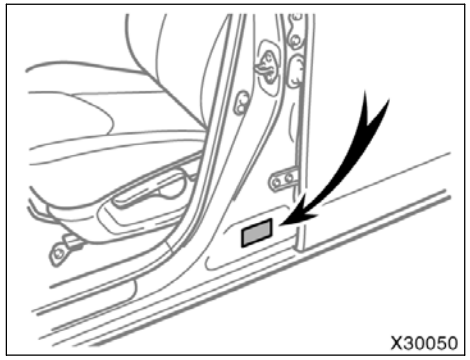

- **Trailer hitch assemblies have different weight capacities established by the hitch manufacturer. Even though the vehicle may be physically capable of towing a higher weight, the operator must determine the maximum weight rating of the particular hitch assembly and never exceed the maximum weight rating specified for the trailer–hitch. Exceeding the maximum weight rating set by the trailer hitch manufacturer can cause an accident resulting in serious personal injuries.**

- **The gross vehicle weight must not exceed the Gross Vehicle Weight Rating (GVWR) indicated on the Certification Label. The gross vehicle weight is the sum of weights of the unloaded vehicle, driver, passengers, luggage, hitch and trailer tongue load. It also includes the weight of any special equipment installed on your vehicle.**
- **The load on either the front or rear axle resulting from distribution of the gross vehicle weight on both axles must not exceed the Gross Axle Weight Rating (GAWR) listed on the Certification Label.**

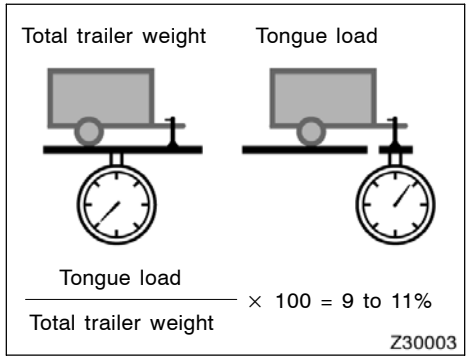

- **The trailer cargo load should be distributed so that the tongue load is 9 to 11% of the total trailer weight, not exceed the following.**

  2.4 L 4–cylinder (2AZ–FE) engine
  68 kg (150 lb.)
  3.5 L V6 (2GR–FE) engine
  Without towing package
  90 kg (200 lb.)
  With towing package
  158 kg (350 lb.)

Never load the trailer with more weight in the back than in the front. About 60% of the trailer load should be in the front half of the trailer and the remaining 40% in the rear.

HITCHES

- Use only a weight carrying hitch designed for the total trailer weight. Toyota does not recommend using a weight distribution (load equalizing) hitch.
- The hitch must be bolted securely to the vehicle frame and installed according to the hitch manufacturer’s instructions.
- The hitch ball should have a light coat of grease.
- Toyota recommends that the trailer hitch be removed when not towing to prevent injury and/or damage by the hitch in event of a rear end collision. After removing the hitch, the installation area should be sealed to prevent entry of exhaust fumes and mud.

NOTICE

Do not use an axle–mounting hitch as it may cause damage to the axle housing, wheel bearings, wheels and/or tires.

BRAKES AND SAFETY CHAINS

- **Toyota recommends trailers with brakes that conform to any applicable federal and state/provincial regulations.**
- **A safety chain must always be used between the towing vehicle and the trailer. Leave sufficient slack in the chain for turns. The chain should cross under the trailer tongue to prevent the tongue from dropping to the ground in case it becomes damaged or separated. For correct safety chain procedures, follow the hitch or trailer manufacturer’s recommendations.**

⚠ CAUTION

- **If the total trailer weight exceeds 272 kg (600 lb.), trailer brakes are required.**
- **Never tap into your vehicle’s hydraulic system as it would lower its braking effectiveness.**
- **Never tow a trailer without using a safety chain securely attached to both the trailer and the vehicle. If damage occurs to the coupling unit or hitch ball, there is danger of the trailer wandering over into another lane.**

TIRES

- Ensure that your vehicle’s tires are properly inflated. See page 408 Section 7–2 and page 433 in Section 8 for instructions.
- The trailer tires should be inflated to the pressure recommended by the trailer manufacturer in respect to the total trailer weight.

TRAILER LIGHTS

- Trailer lights must comply with federal, state/provincial and local regulations. See your local recreational vehicle dealer or rental agency for the correct type of wiring and relays for your trailer. Check for correct operation of the turn signals and stop lights each time you hitch up. Direct splicing may damage your vehicle’s electrical system and cause a malfunction of your lights.

BREAK–IN SCHEDULE

- Toyota recommends that you do not tow a trailer with a new vehicle or a vehicle with any new power train component (engine, transmission, differential, wheel bearing, etc.) for the first 800 km (500 miles) of driving.

MAINTENANCE

- If you tow a trailer, your vehicle will require more frequent maintenance due to the additional load. For this information, please refer to the scheduled maintenance information in the “Scheduled Maintenance Guide” or “Owner’s Manual Supplement”.
- Retighten all fixing bolts of the towing ball and bracket after approximately 1000 km (600 miles) of trailer driving.

PRE–TOWING SAFETY CHECK

- Check that your vehicle remains level when a loaded or unloaded trailer is hitched. Do not drive if the vehicle has an abnormal nose–up or nose–down condition, and check for improper tongue load, overload, worn suspension or other possible causes.
- Make sure the trailer cargo is securely loaded so that it cannot shift.
- Check that your rear view mirrors conform to any applicable federal, state/provincial or local regulations. If not, install the rear view mirrors required for towing purpose.

TRAILER TOWING TIPS

When towing a trailer, your vehicle will handle differently than when not towing. The three main causes of vehicle–trailer accidents are driver error, excessive speed and improper trailer loading. Keep these in mind when towing:

- Before starting out, check operation of the lights and all vehicle–trailer connections. After driving a short distance, stop and recheck the lights and connections. Before actually towing a trailer, practice turning, stopping and backing with a trailer in an area away from traffic until you learn the feel.

- Because stopping distance may be increased, vehicle–to–vehicle distance should be increased when towing a trailer. For each 16 km/h (10 mph) of speed, allow at least one vehicle and trailer length between you and the vehicle ahead. Avoid sudden braking as you may skid, resulting in jackknifing and loss of control. This is especially true on wet or slippery surfaces.
- Avoid jerky starts or sudden acceleration.
- Avoid jerky steering and sharp turns. The trailer could hit your vehicle in a tight turn. Slow down before making a turn to avoid the necessity of sudden braking.
- Backing with a trailer is difficult and requires practice. Grip the bottom of the steering wheel and move your hand to the left to move the trailer to the left. Move your hand to the right to move the trailer to the right. (This procedure is generally opposite to that when backing without a trailer.) Also, just turn the steering wheel a little at a time, avoiding sharp or prolonged turning. Have someone guide you when backing to reduce the risk of an accident.
- Remember that when making a turn, the trailer wheels will be closer than the vehicle wheels to the inside of the turn. Therefore, compensate for this by making a larger than normal turning radius with your vehicle.
- Crosswinds and rough roads will adversely affect handling of your vehicle and trailer, causing sway. Pay attention to the rear from time to time to prepare yourself for being passed by large trucks or buses, which may cause your vehicle and trailer to sway. If swaying happens, firmly grip the steering wheel and reduce speed immediately but gradually. Never increase speed. Steer straight ahead. If you make no extreme correction with the steering or brakes, the vehicle and trailer will stabilize.
- Be careful when passing other vehicles. Passing requires considerable distance. After passing a vehicle, do not forget the length of your trailer and be sure you have plenty of room before changing lanes.
- In order to maintain engine braking efficiency, do not place the transmission in “D”.
- Because of the added load of the trailer, your vehicle’s engine may overheat on hot days (at temperatures over 30°C [85°F]) when going up a long or steep grade with a trailer. If the engine coolant temperature gauge indicates overheating, immediately turn off the air conditioning (if in use), pull off the road and stop in a safe spot. Refer to “If your vehicle overheats” on page 360 in Section 4.
- Always place wheel blocks under both the vehicle and trailer wheels when parking. Apply the parking brake firmly. Put the transmission in “P”. Avoid parking on a slope with a trailer, but if it cannot be avoided, do so only after performing the following:

1. Apply the brakes and hold.
2. Have someone place wheel blocks under both the vehicle and trailer wheels.
3. When the wheel blocks are in place, release your brakes slowly until the blocks absorb the load.
4. Apply the parking brake firmly.
5. Shift into “P” and turn off the engine.

When restarting out after parking on a slope:

1. With the transmission in “P” position, start the engine. Be sure to keep the brake pedal depressed.
2. Shift into gear.
3. Release the parking brake and brake pedal. Slowly pull or back away from the wheel blocks. Stop and apply your brakes.
4. Have someone retrieve the blocks.

⚠ CAUTION

- **Do not exceed 72 km/h (45 mph) or the posted towing speed limit, whichever is lower. Because instability (swaying) of a towing vehicle–trailer combination usually increases as the speed increases, exceeding 72 km/h (45 mph) may cause loss of control.**

- **Slow down and downshift before descending steep or long downhill grades. Do not make sudden downshifts.**
- **Avoid holding the brake pedal down too long or too frequently. This could cause the brakes to overheat and result in reduced braking efficiency.**

How to save fuel and make your vehicle last longer

Improving fuel economy is easy—just take it easy. It will help make your vehicle last longer, too. Here are some specific tips on how to save money on both fuel and repairs:

- **Keep your tires inflated at the correct pressure.** Underinflation causes tire wear and wastes fuel. See page 408 in Section 7–2 for instructions.
- **Do not carry unneeded weight in your vehicle.** Excess weight puts a heavier load on the engine, causing greater fuel consumption.
- **Avoid lengthy warm–up idling.** Once the engine is running smoothly, begin driving—but gently. Remember, however, that on cold winter days this may take a little longer.
- **Put the selector lever into the “D” when engine braking is not required.** Driving with the select lever in “3” (4–speed) or “4” (5–speed) will reduce the fuel economy. (For details, see “Automatic transmission” on page 143 or 147 in Section 1–7.)
- **Accelerate slowly and smoothly.** Avoid jackrabbit starts. Get into high gear as quickly as possible.

- **Avoid long engine idling.** If you have a long wait and you are not in traffic, it is better to turn off the engine and start again later.
- **Avoid engine lugging or over–revving.** Use a gear position suitable for the road on which you are travelling.
- **Avoid continuous speeding up and slowing down.** Stop–and–go driving wastes fuel.
- **Avoid unnecessary stopping and braking.** Maintain a steady pace. Try to time the traffic signals so you only need to stop as little as possible or take advantage of through streets to avoid traffic lights. Keep a proper distance from other vehicles to avoid sudden braking. This will also reduce wear on your brakes.
- **Avoid heavy traffic or traffic jams whenever possible.**
- **Do not rest your foot on the brake pedal.** This causes premature wear, overheating and poor fuel economy.
- **Maintain a moderate speed on highways.** The faster you drive, the greater the fuel consumption. By reducing your speed, you will cut down on fuel consumption.
- **Keep the front wheels in proper alignment.** Avoid hitting the curb and slow down on rough roads. Improper alignment not only causes faster tire wear but also puts an extra load on the engine, which, in turn, wastes fuel.
- **Keep the bottom of your vehicle free from mud, etc.** This not only lessens weight but also helps prevent corrosion.
- **Keep your vehicle tuned–up and in top shape.** A dirty air cleaner, improper valve clearance, dirty plugs, dirty oil and grease,brakes not adjusted, etc. all lower engine performance and contribute to poor fuel economy. For longer life of all parts and lower operating costs, keep all maintenance work on schedule, and if you often drive under severe conditions, see that your vehicle receives more frequent maintenance. (For scheduled maintenance information, please refer to the “Scheduled Maintenance Guide” or “Owner’s Manual Supplement”.)

⚠ CAUTION

Never turn off the engine to coast down hills. Your power steering and brake booster will not function without the engine running. Also, the emission control system operates properly only when the engine is running.

SECTION 4

IN CASE OF AN EMERGENCY

In case of an emergency

If your vehicle will not start 356
If your engine stalls while driving 359
If you cannot increase engine speed 359
If your vehicle overheats 360
If you have a flat tire 361
If your vehicle becomes stuck 373
If your vehicle needs to be towed 373
If you cannot shift automatic transmission selector lever 378
If you lose your keys 379

If your vehicle will not start—
(a) Simple checks

Before making these checks, make sure you have followed the correct starting procedure given in “How to start the engine” on page 342 in Section 3 and that you have sufficient fuel. If your vehicle is equipped with the engine immobilizer system, also check whether the other keys will start the engine. If they work, your key may be broken. Have the key checked at your Toyota dealer. If none of your keys work, there may be a malfunction in the immobilizer system. Call your Toyota dealer. (See “Keys (with engine immobilizer system)” on page 12 in Section 1–2.)

If the engine is not turning over or is turning over too slowly—

1. Check that the battery terminals are tight and clean.
2. If the battery terminals are O.K., switch on the interior light.
3. If the light is out, dim or goes out when the starter is cranked, the battery is discharged. You may try jump starting. See “(c) Jump starting” on page 357 for further instructions.

If the light is O.K., but the engine still will not start, it needs adjustment or repair. Call a Toyota dealer or qualified repair shop.

If the engine turns over at its normal speed but will not start—

1. Turn the engine switch to the “ACC” or “LOCK” position and try starting the engine again.
2. If the engine will not start, the engine may be flooded because of repeated cranking. See “(b) Starting a flooded engine” on page 356 for further instructions.
3. If the engine still will not start, it needs adjustment or repair. Call a Toyota dealer or qualified repair shop.

(b) Starting a flooded engine

If the engine will not start, your engine may be flooded because of repeated cranking.

If this happens, turn the engine switch to the “START” position with the accelerator pedal fully depressed. Keep the key and accelerator pedal in these positions for 15 seconds and release them. Then try starting the engine with your foot off the accelerator pedal.

If the engine does not start after 15 seconds of cranking, release the key, wait a few minutes and try again.

If the engine still will not start, it needs adjustment or repair. Call a Toyota dealer or qualified repair shop for assistance.

NOTICE
Do not crank for more than 30 seconds at a time. This may overheat the starter and wiring systems.

(c) Jump starting

To avoid serious personal injury and damage to your vehicle which might result from battery explosion, acid burns, electrical burns, or damaged electronic components, these instructions must be followed precisely.

The engine cannot be started by push–starting.

If you are unsure about how to follow this procedure, we strongly recommend that you seek the help of a competent mechanic or towing service.

⚠ CAUTION

- **Batteries contain sulfuric acid which is poisonous and corrosive. Wear protective safety glasses when jump starting, and avoid spilling acid on your skin, clothing, or vehicle.**
- **If you should accidentally get acid on yourself or in your eyes, remove any contaminated clothing and flush the affected area with water immediately. Then get immediate medical attention. If possible, continue to apply water with a sponge or cloth while en route to the medical office.**
- **The gas normally produced by a battery will explode if a flame or spark is brought near. Use only standardized jumper cables and do not smoke or light a match while jump starting.**

NOTICE

The battery used for boosting must be 12 V. Do not jump start unless you are sure that the booster battery is correct.

JUMP STARTING PROCEDURE

1. If the booster battery is installed in another vehicle, make sure the vehicles are not touching. Turn off all unnecessary lights and accessories.

   When boosting, use the battery of matching or higher quality. Any other battery may be difficult to jump start with.

   If jump starting is difficult, charge the battery for several minutes.
2. If required, remove all the vent plugs from the booster and discharged batteries. Lay a cloth over the open vents on the batteries. (This helps reduce the explosion hazard, personal injuries and burns.)
3. If the engine in the vehicle with the booster battery is not running, start it and let it run for a few minutes. During jump starting, run the engine at about 2000 rpm with the accelerator pedal lightly depressed.

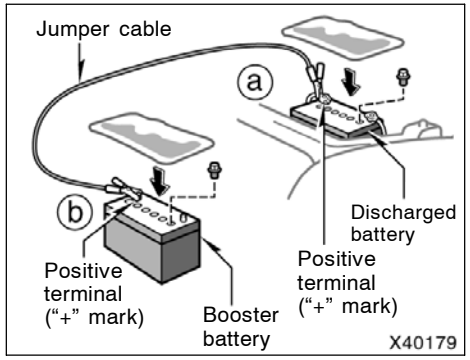

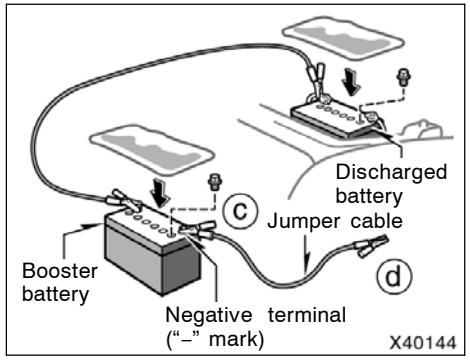

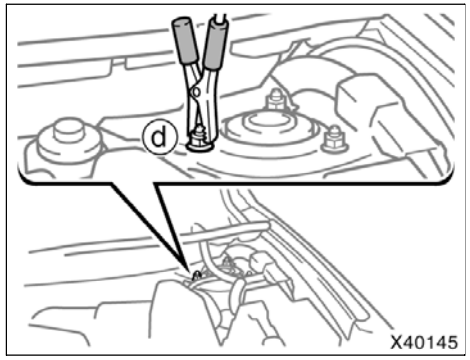

4. Make the cable connections in the order a, b, c, d.

   a. Connect the clamp of the positive (red) jumper cable to the positive (+) terminal on the discharged battery.

   b. Connect the clamp at the other end of the positive (red) jumper cable to the positive (+) terminal on the booster battery.

   c. Connect the clamp of the negative (black) cable to the negative (–) terminal on the booster battery.

   d. Connect the clamp at the other end of the negative (black) jumper cable to a solid, stationary, unpainted, metallic point of the vehicle with the discharged battery.

   The recommended connecting point is shown in the following illustration:

Connecting point

Do not connect the cable to or near any part that moves when the engine is cranked.

⚠ CAUTION

When making the connections, to avoid serious injury, do not lean over the battery or accidentally let the jumper cables or clamps touch anything except the correct battery terminals or the ground.

5. Start your engine in the normal way. After starting, run it at about 2000 rpm for several minutes with the accelerator pedal lightly depressed.
6. Carefully disconnect the cables in the exact reverse order: the negative cable and then the positive cable.
7. Carefully dispose of the battery cover cloths—they may now contain sulfuric acid.
8. If removed, replace all the battery vent plugs.

If the cause of your battery discharging is not apparent (for example, lights left on), you should have it checked at your Toyota dealer.

If the first start attempt is not successful...

Check that the clamp on the jumper cables are tight. Recharge the discharged battery with the jumper cables connected for several minutes and restart your engine in the normal way.

If the another attempt is not successful, the battery may be depleted. Have it checked at your Toyota dealer.

If your engine stalls while driving

If your engine stalls while driving...

1. Reduce your speed gradually, keeping a straight line. Move cautiously off the road to a safe place.
2. Turn on your emergency flashers.
3. Turn the engine switch to the “ACC” or “LOCK” position, and try starting the engine again.

If the engine will not start, see “If your vehicle will not start” on page 356 in this Section.

CAUTION

If the engine is not running, the power assist for the brakes and steering will not work so steering and braking will be much harder than usual.

If you cannot increase engine speed

If engine speed does not increase when the accelerator pedal is depressed, there may be a problem somewhere in the electronic throttle control system.

At this time, vibration may occur. However, if you depress the accelerator pedal more firmly and slowly, you can drive your vehicle at low speeds. Have your vehicle checked by your Toyota dealer as soon as possible.

Even if the abnormality of the electronic throttle control system is corrected during low speed driving, the system may not be recovered until the engine is stopped and the engine switch is turned to the “ACC” or “LOCK” position.

CAUTION

Be especially careful to prevent erroneous pedal operation.

If your vehicle overheats

If your engine coolant temperature gauge indicates overheating, if you experience a loss of power, or if you hear a loud knocking or pinging noise, the engine has probably overheated. You should follow this procedure...

1. Pull safely off the road, stop the vehicle and turn on your emergency flashers. Put the transmission in “P” and apply the parking brake. Turn off the air conditioning if it is being used.
2. If coolant or steam is boiling out of the radiator or reservoir, stop the engine. Wait until the steam subsides before opening the hood. If there is no coolant boiling over or steam, leave the engine running and make sure the electric cooling fan is operating. If it is not, turn the engine off.

CAUTION

To help avoid personal injury, keep the hood closed until there is no steam. Escaping steam or coolant is a sign of very high pressure.

3. Look for obvious coolant leaks from the radiator, hoses, and under the vehicle. However, note that water draining from the air conditioning is normal if it has been used.

CAUTION

When the engine is running, keep hands and clothing away from the moving fan and engine drive belts.

4. If the coolant is leaking, stop the engine immediately. Call a Toyota dealer for assistance.
5. If there are no obvious leaks, check the coolant reservoir. If it is dry, add coolant to the reservoir while the engine is running. Fill it about half full. For the coolant type, see “Coolant type selection” on page 406 in Section 7–2.

CAUTION

Do not attempt to remove the coolant reservoir cap when the engine and radiator are hot. Serious injury could result from scalding hot fluid and steam blown out under pressure.

6. After the engine coolant temperature has cooled to normal, again check the coolant level in the reservoir. If necessary, bring it up to half full again. Serious coolant loss indicates a leak in the system. You should have it checked as soon as possible at your Toyota dealer.

If you have a flat tire—

1. Reduce your speed gradually, keeping a straight line. Move cautiously off the road to a safe place well away from the traffic. Avoid stopping on the center divider of a highway. Park on a level spot with firm ground.
2. Stop the engine and turn on your emergency flashers.
3. Firmly set the parking brake and put the transmission in “P”.
4. Have everyone get out of the vehicle on the side away from traffic.
5. Read the following instructions thoroughly.

⚠ CAUTION

When jacking, be sure to observe the following to reduce the possibility of death or serious injury:

- **Follow jacking instructions.**
- **Do not put any part of your body under the vehicle supported by the jack. Otherwise, personal injury may occur.**
- **Do not start or run the engine while your vehicle is supported by the jack.**
- **Stop the vehicle on a level firm ground, firmly set the parking brake and put the transmission in “P”. Block the wheel diagonally opposite to the one being changed if necessary.**
- **Make sure to set the jack properly in the jack point. Raising the vehicle with jack improperly positioned will damage the vehicle or may allow the vehicle to fall off the jack and cause personal injury.**
- **Never get under the vehicle when the vehicle is supported by the jack alone.**
- **Use the jack only for lifting your vehicle during wheel changing.**
- **Do not raise the vehicle with someone in the vehicle.**
- **When raising the vehicle, do not place any objects on top of or underneath the jack.**
- **Raise the vehicle only high enough to remove and change the tire.**

—Required tools and spare tire

NOTICE
Do not continue driving with a deflated tire. Driving even a short distance can damage a tire and wheel beyond repair.

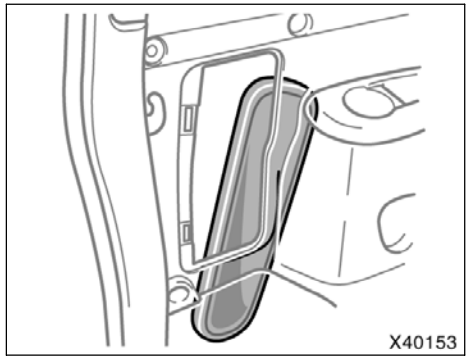

Tool bag

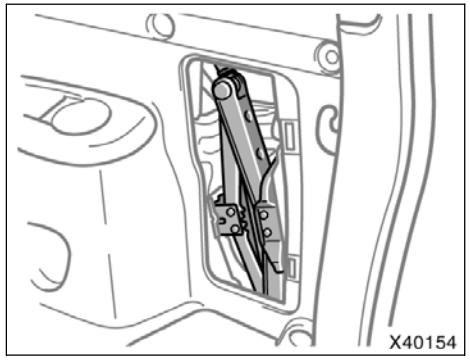

Jack

1. **Get the required tools and spare tire on the back door.**

To prepare yourself for an emergency, you should familiarize yourself with the use of the jack, each of the tools and their storage locations.

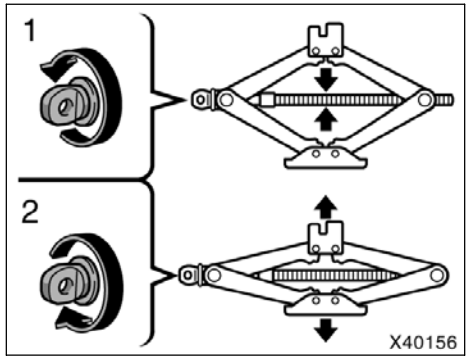

To remove the jack, turn the jack joint by hand.

To remove: Turn the joint in direction 1 until the jack is free.
To store: Turn the joint in direction 2 until the jack is firmly secured to prevent it flying forward during a collision or sudden braking.

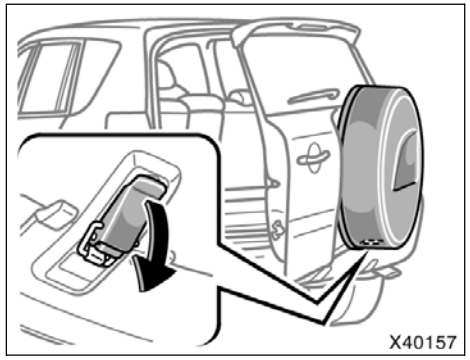

To remove the spare cover:

1. Open the back door. Unhook the latch handle which on the bottom of the spare tire cover.

The latch handle can be released only when the back door is opened.

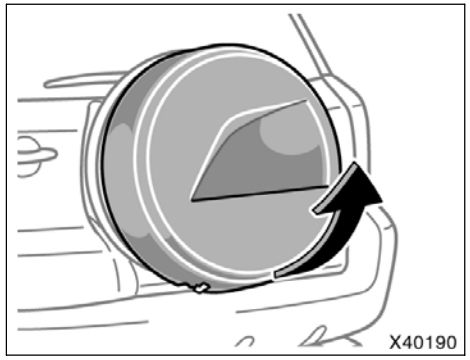

2. Close the back door. Remove the spare tire cover.

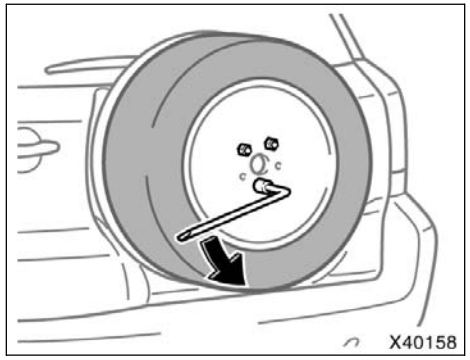

To remove the spare tire, turn the hold–down nuts counterclockwise with the wheel nut wrench and remove them.

When stowing the spare tire, put it in place and secure it to prevent it from flying forward during a collision or sudden braking.

—Blocking the wheel

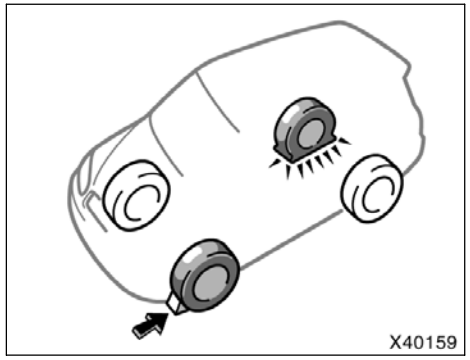

2. **Block the wheel diagonally opposite the flat tire to keep the vehicle from rolling when it is jacked up.**

When blocking the wheel, place a wheel block in front of one of the front wheels or behind one of the rear wheels.

—Removing wheel ornament

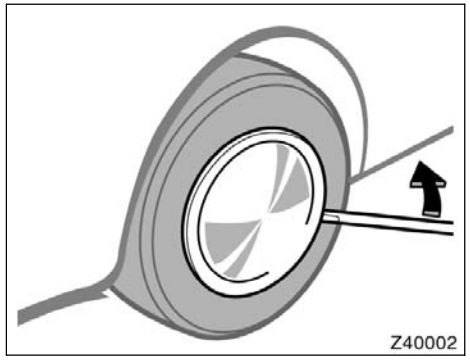

Type A

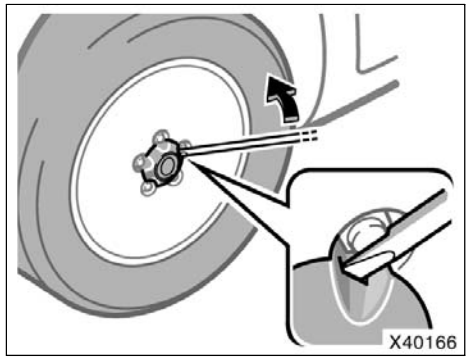

Type B

3. Remove the wheel ornament.

Pry off the wheel ornament, using the beveled end of the wheel nut wrench as shown.

⚠ CAUTION

Do not try to pull off the ornament by hand. Take due care in handling the ornament to avoid unexpected personal injury.

—Loosening wheel nuts

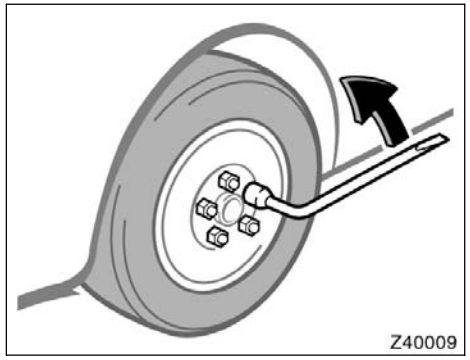

4. Loosen all the wheel nuts.

Always loosen the wheel nuts before raising the vehicle.

Turn the wheel nuts counterclockwise to loosen. To get maximum leverage, fit the wrench to the nut so that the handle is on the right side, as shown above. Grab the wrench near the end of the handle and pull up on the handle. Be careful that the wrench does not slip off the nut.

Do not remove the nuts yet—just unscrew them about one–half turn.

⚠ CAUTION

Never use oil or grease on the bolts or nuts. The nuts may loose and the wheels may fall off, which could cause a serious accident.

—Positioning the jack

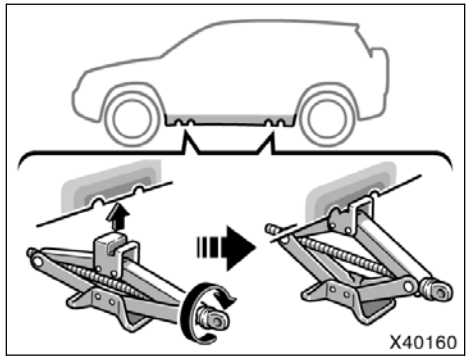

5. Position the jack at the correct jack point as shown.

Make sure the jack is positioned on a level and solid place.

—Raising your vehicle

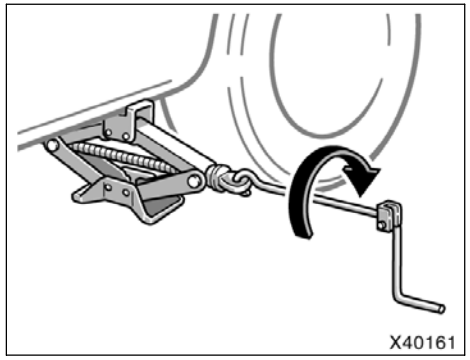

6. After making sure that no one is in the vehicle, raise it high enough so that the spare tire can be installed.

Remember you will need more ground clearance when putting on the spare tire than when removing the flat tire.

To raise the vehicle, insert the jack handle into the jack (it is a loose fit) and turn it clockwise. As the jack touches the vehicle and begins to lift, double–check that it is properly positioned.

⚠ CAUTION

Never get under the vehicle when the vehicle is supported by the jack alone.

—Changing wheels

7. Remove the wheel nuts and change tires.

Lift the flat tire straight off and put it aside.

Roll the spare wheel into position and align the holes in the wheel with the bolts. Then lift up the wheel and get at least the top bolt started through its hole. Wiggle the tire and press it back over the other bolts.

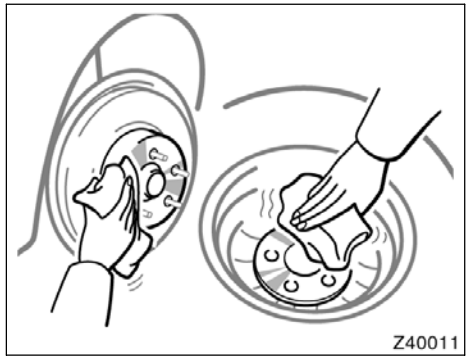

Before putting on wheels, remove any corrosion on the mounting surfaces with a wire brush or such. Installation of wheels without good metal–to–metal contact at the mounting surface can cause wheel nuts to loosen and eventually cause a wheel to come off while driving.

—Reinstalling wheel nuts

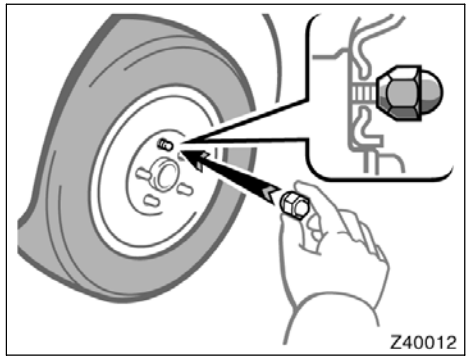

8. Reinstall all the wheel nuts finger tight.

Reinstall the wheel nuts (tapered end inward) and tighten them as much as you can by hand. Press back on the tire back and see if you can tighten them more.

CAUTION

Never use oil or grease on the bolts or nuts. Doing so may lead to overtightening the nuts and damaging the bolts. The nuts may loose and the wheels may fall off, which could cause a serious accident. If there is oil or grease on any bolt or nut, clean it.

—Lowering your vehicle

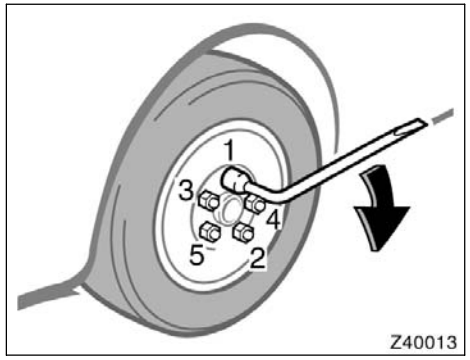

9. Lower the vehicle completely and tighten the wheel nuts.

Turn the jack handle counterclockwise to lower the vehicle.

Use only the wheel nut wrench and turn it clockwise to tighten the nuts. Do not use other tools or any additional leverage other than your hands, such as a hammer, pipe or your foot. Make sure the wrench is securely engaged over the nut.

Tighten each nut a little at a time in the order shown. Repeat the process until all the nuts are tight.

CAUTION

- **When lowering the vehicle, make sure all portions of your body and all other persons around will not be injured as the vehicle is lowered to the ground.**
- **Have the wheel nuts tightened with torque wrench to 103 N·m (10.5 kgf·m, 76 ft·lbf), as soon as possible after changing wheels. Otherwise, the nuts may loosen and the wheels may fall off, which could cause a serious accident.**

—Stowing flat tire

10. Install the flat tire and spare tire cover on the back door.

⚠ CAUTION

Make sure flat tire and spare tire cover are securely in place in their storage location to reduce the possibility of personal injury during a collision or sudden braking.

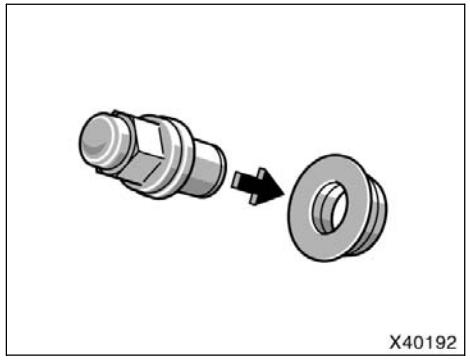

On vehicles with aluminum wheels and a steel wheel for the spare, remove the rubber rings from the wheel nuts of the spare tire carrier before stowing a flat tire. Be careful not to lose the rubber rings after removing them.

⚠ CAUTION

Make sure that the rubber rings are not installed to the wheel nuts for aluminum wheel. Otherwise, the nuts may become loose and the wheel may fall off, which may cause a serious accident.

After repairing the flat tire, be sure to reinstall the rubber rings to the wheel nuts before stowing the spare tire. If the steel wheel is stowed without reinstalling the rubber rings to the wheel nuts, the spare tire carrier may produce abnormal noise when the vehicle is driven.

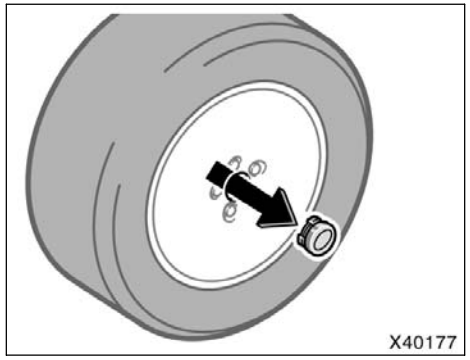

On some models—Before stowing the flat tire, remove the center wheel ornament by pushing from the reverse side.

Be careful not to lose the wheel ornament.

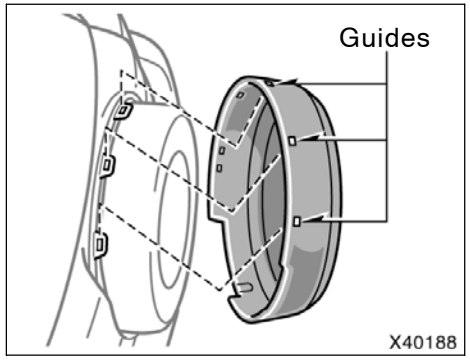

To install the spare tire cover:

1. Insert the hooks under the guides to the upper slots and lower the cover.

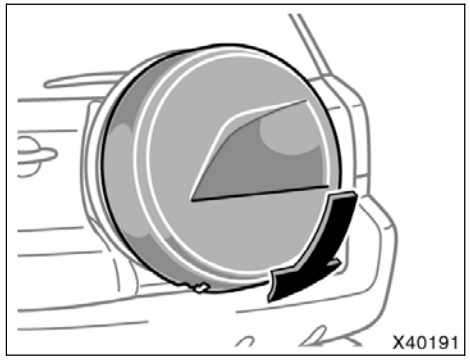

2. Attach the cover by hooking the 2 inner protrusions.

Check that the cover is securely attached.

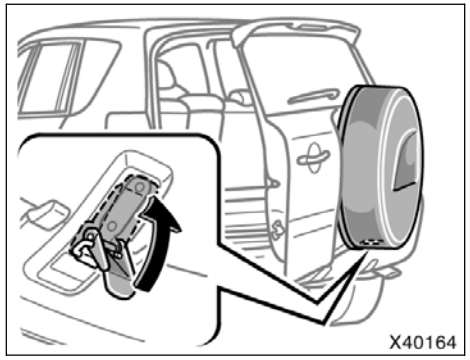

3. Open the back door. Lock the latch handle which is on the bottom of the cover.
4. Close the back door.

Check that the cover is securely in place.

—Reinstalling wheel ornament

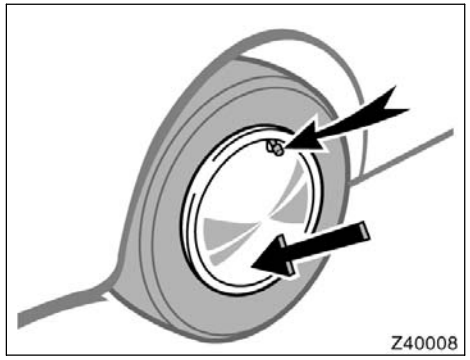

Type A

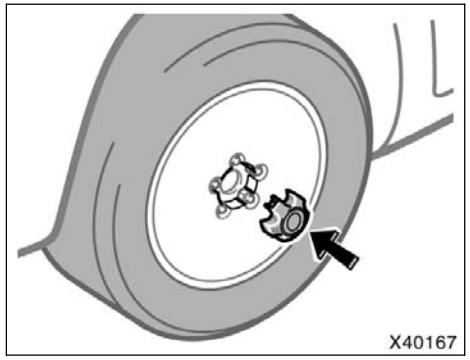

Type B

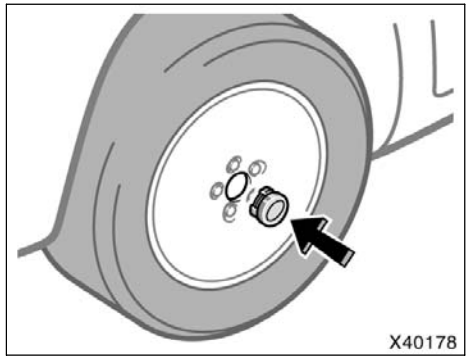

Type C

11. Reinstall the wheel ornament.

Type A and B—

1. Put the wheel ornament into position.

   Type A only: Align the cutout of the wheel ornament with the valve stem as shown.
2. Then firmly tap the outer edge of the wheel cap with the side or heel of your hand to snap into place.

Type C—

Push the wheel ornament into the center hole.

With a spare tire of different wheel type from the installed tires, the wheel ornament can not be installed into the spare tire. After repairing the flat tire, reinstall the wheel ornament.

⚠ CAUTION

- **Take due care in handling the ornament to avoid unexpected personal injury.**
- **Do not attach a heavily damaged plastic wheel ornament. It may fly off the wheel and cause accidents while the vehicle is moving.**

—After changing wheels

12. Check the air pressure of the replaced tire.

Adjust the air pressure to the specification designated on page 433 in Section 8. If the pressure is lower, drive slowly to the nearest service station and fill to the correct pressure.

Do not forget to reinstall the tire inflation valve cap as dirt and moisture could get into the valve core and possibly cause air leakage. If the cap is missing, have a new one put on as soon as possible.

13. Restow all the tools and jack securely.

As soon after changing wheels as possible, tighten the wheel nuts to the torque specified on page 433 in Section 8 with a torque wrench. Have a technician repair the flat tire.

⚠ CAUTION

Before driving, make sure all the tools and jack are securely in place in their storage location to reduce the possibility of personal injury during a collision or sudden braking.

If your vehicle becomes stuck

If your vehicle becomes stuck in snow, mud, sand, etc., then you may attempt to rock the vehicle free by moving it forward and backward.

You can use the “AUTO LSD” switch (two–wheel drive models) or four–wheel drive lock switch (four–wheel drive models) in this situation. (For details, see ““AUTO LSD” system” on page 153 or “Active torque control 4WD system” on page 150 in Section 1–7.)

⚠ CAUTION

Do not attempt to rock the vehicle free by moving it forward and backward if people or objects are anywhere near the vehicle. During the rocking operation the vehicle may suddenly move forward or backward as it becomes unstuck, causing injury or damage to nearby people or objects.

NOTICE

If you rock your vehicle, observe the following precautions to prevent damage to the transmission and other parts.

- ***Do not depress the accelerator pedal while shifting the selector lever or before the transmission is completely shifted to forward or reverse gear.***
- ***Do not race the engine and avoid spinning the wheels.***
- ***If your vehicle remains stuck after rocking the vehicle several times, consider other ways such as towing.***

If your vehicle needs to be towed—

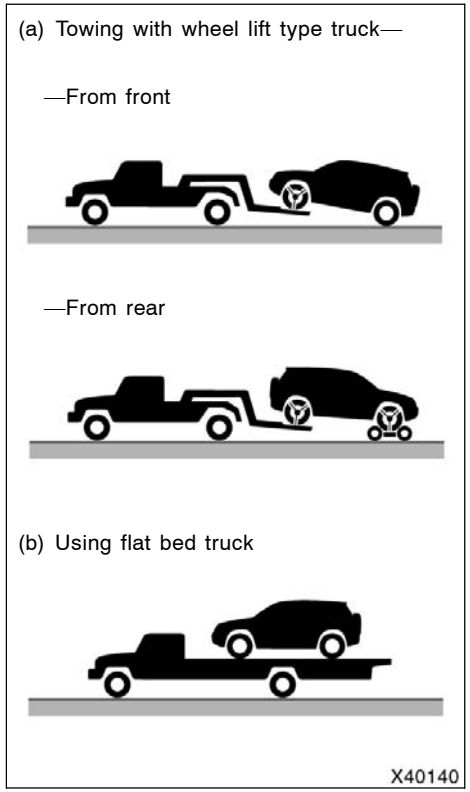

Two–wheel drive models

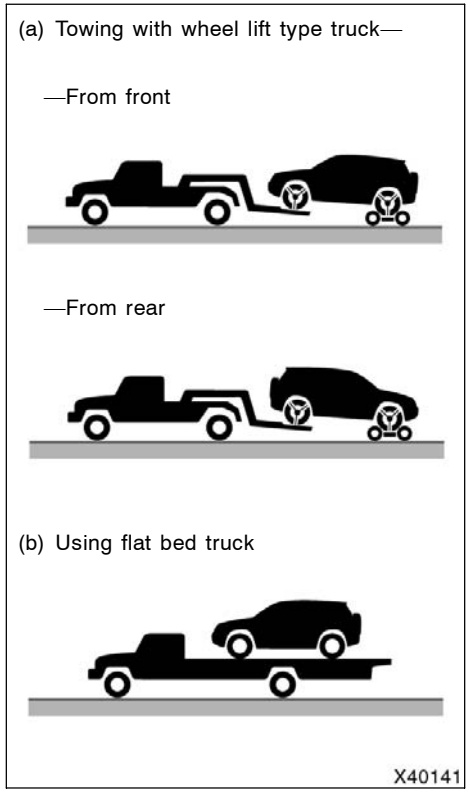

Four-wheel drive models

If towing is necessary, we recommend you to have it done by your Toyota dealer or a commercial tow truck service. In consultation with them, have your vehicle towed using either (a) or (b).

Only when you cannot receive a towing service from a Toyota dealer or commercial tow truck service, tow your vehicle carefully in accordance with the instructions given in “—Emergency towing” on page 375 in this Section.

Proper equipment will help ensure that your vehicle is not damaged while being towed. Commercial operators are generally aware of the state/provincial and local laws pertaining to towing.

Your vehicle can be damaged if it is towed incorrectly. Although most operators know the correct procedure, it is possible to make a mistake. To avoid damage to your vehicle, make sure the following precautions are observed. If necessary, show this page to the tow truck driver.

TOWING PRECAUTIONS:

Use a safety chain system for all towing, and abide by the state/provincial and local laws. The wheels and axle on the ground must be in good condition. If they are damaged, use a towing dolly.

Two-wheel drive models—

(a) Towing with wheel lift type truck

From front—Release the parking brake.

NOTICE
When lifting wheels, take care to ensure adequate ground clearance for towing at the opposite end of the raised vehicle. Otherwise, the bumper and/or underbody of the towed vehicle will be damaged during towing.

From rear—

Use a towing dolly under the front wheels.

NOTICE
Never tow a vehicle with an automatic transmission from the rear with the front wheels on the ground, as this may cause serious damage to the transmission.

(b) Using flat bed truck

Four-wheel drive models—

(a) Towing with wheel lift type truck

Use a towing dolly under the wheels not lifted by the truck.

(b) Using flat bed truck

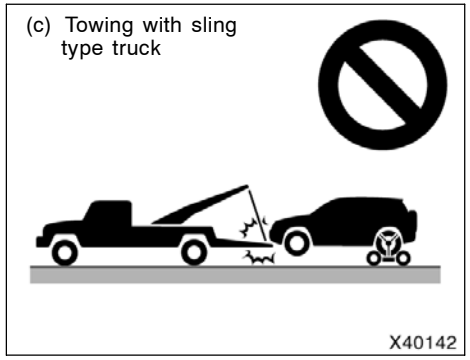

All models—

(c) Towing with sling type truck

NOTICE
Do not tow with sling type truck, either from the front or rear. This may cause body damage.

—Emergency towing

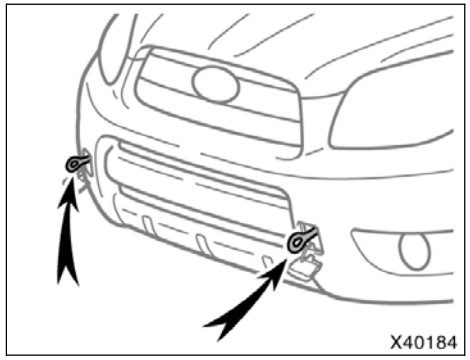

If towing is necessary, we recommend you to have it done by your Toyota dealer or a commercial tow truck service.

If towing service is not available in an emergency, your vehicle may be temporarily towed by a cable or chain secured to the emergency towing eyelets on the front of the vehicle. Use extreme caution when towing vehicle.

To install the front towing eyelet, see “—Installing front towing eyelet” described below.

NOTICE

- ***Only use specified towing eyelet; otherwise your vehicle may be damaged.***
- ***Never tow a vehicle from the rear with four wheels on the ground. This may cause serious damage to the transmission.***

A driver must be in the vehicle to steer it and operate the brakes.

Towing in this manner may be done only on hard–surfaced roads for a short distance and at low speeds. Also, the wheels, axles, drive train, steering and brakes must all be in good condition.

⚠ CAUTION

Use extreme caution when towing vehicles. Avoid sudden starts or erratic driving maneuvers which would place excessive stress on the emergency towing eyelet and towing cable or chain. The eyelet and towing cable or chain may break and cause serious injury or damage.

NOTICE

Use only a cable or chain specifically intended for use in towing vehicles. Securely fasten the cable or chain to the towing eyelet provided.

Before towing, release the parking brake and put the transmission in “N”. The engine switch must be in the “ACC” (engine off) or the “ON” (engine running) position.

⚠ CAUTION

If the engine is not running, the power assist for the brakes and steering will not work so steering and braking will be much harder than usual.

—Installing front towing eyelet

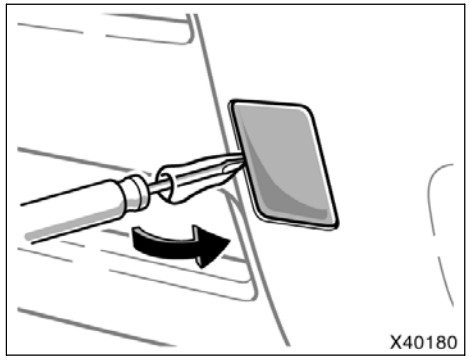

1. Remove the front towing eyelet cover on the front bumper, using a flathead screwdriver which is wrapped with a cloth.

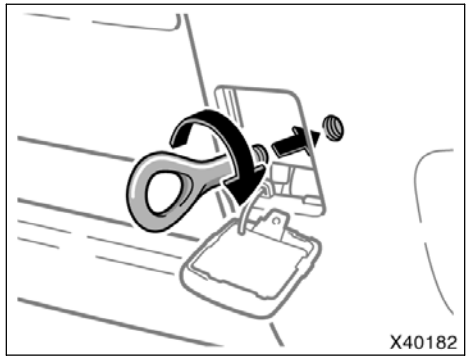

2. Use the front towing eyelet in the tool bag. Secure it to the hole on the bumper by turning clockwise. (For the tool bag location, see “—Required tools and spare tire” on page 362 in this Section.)

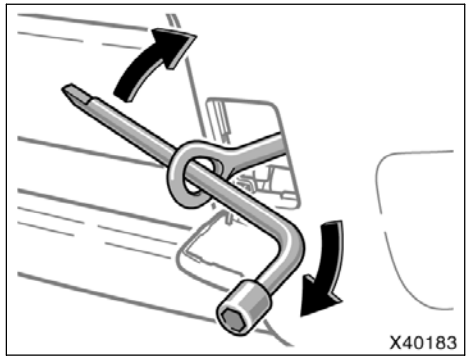

3. Tighten the front towing eyelet securely by a wheel nut wrench.

⚠ CAUTION

When installing the eyelet on the vehicle, be sure to tighten the front eyelet securely. If the eyelet is loose, it may come off when being towed and result in death or serious injury.

—Emergency towing eyelet precautions

- Before emergency towing, check that the eyelet is not broken or damaged and that the installation bolts are not loose.
- Fasten the towing cable or chain securely to the eyelet.
- Do not jerk the eyelet. Apply steady and even force.
- To avoid damaging the eyelet, do not pull from the side or at a vertical angle. Always pull straight ahead.

CAUTION

If the emergency towing eyelet is used to get out when your vehicle becomes struck in mud, sand or other condition from which the vehicle cannot be driven out under its own power, make sure to observe the precautions mentioned below. Otherwise, excessive stress will be put on the eyelet and the towing cable or chain may break, causing serious injury or damage.

- **If the towing vehicle can hardly move, do not forcibly continue the towing. Contact your Toyota dealer or a commercial tow truck service for assistance.**
- **Tow the vehicle as straight ahead as possible.**
- **Keep away from the vehicle during towing.**

—Tips for towing a stuck vehicle

The following methods are effective to get out when your vehicle is struck in mud, sand or other condition from which the vehicle cannot be driven out under its own power. Use extreme caution when towing vehicles. In addition, keep away from the vehicles and towing cable or chain when towing.

- Remove the soil and sand in the front and the back of the tires.
- Place a stone or wood under the tires.

If you cannot shift automatic transmission selector lever

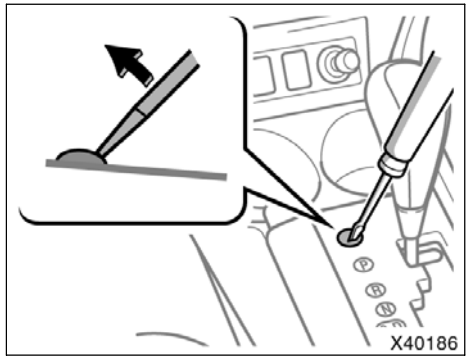

If you cannot shift the selector lever out of “P” position to other positions even though the brake pedal is depressed, use the shift lock override button as follows:

1. **Turn the engine switch to the “LOCK” position. Make sure the parking brake is applied.**
2. **Pry up the cover with a flathead screwdriver or equivalent.**

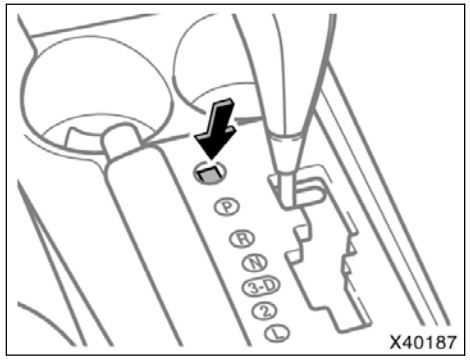

3. **Insert your finger into the hole to push down the shift lock override button. You can shift out of “P” position only while pushing the button.**
4. **Shift into “N” position.**
5. **Insert the cover.**
6. **Start the engine. For your safety, keep the brake pedal depressed.**

Be sure to have the system checked by your Toyota dealer as soon as possible.

If you lose your keys

You can purchase a new key at your Toyota dealer if you can give them the key number. If your vehicle is equipped with the engine immobilizer system, the dealer will also need your master key.

Vehicles with engine immobilizer system— Even if you lose only one key, contact your Toyota dealer to make a new key. If you lose all your master keys, you cannot make new keys; the whole engine immobilizer system must be replaced.

See the suggestion given in “Keys (with engine immobilizer system)” on page 12 in Section 1–2.

You can use the wireless remote control system with the new key. Contact your Toyota dealer for detailed information.

If your keys are locked in the vehicle and you cannot get a duplicate, many Toyota dealers can still open the door for you, using their special tools. If you must break a window to get in, we suggest breaking the smallest side window because it is the least expensive to replace. Be extremely cautious to avoid cuts from the glass.

SECTION 5

CORROSION PREVENTION AND APPEARANCE CARE

Corrosion prevention and appearance care

Protecting your Toyota from corrosion 382
Washing and waxing your Toyota 383
Cleaning the interior 386

Protecting your Toyota from corrosion

Toyota, through the diligent research, design and use of the most advanced technology available, helps prevent corrosion and provides you with the finest quality vehicle construction. Now, it is up to you. Proper care of your Toyota can help ensure long–term corrosion prevention.

The most common causes of corrosion to your vehicle are:

- The accumulation of road salt, dirt and moisture in hard–to–reach areas under the vehicle.
- Chipping of paint, or undercoating caused by minor accidents or by stones and gravel.

Care is especially important if you live in particular areas or operate your vehicle under certain environmental conditions:

- Road salt or dust control chemicals will accelerate corrosion, as will the presence of salt in the air near the sea–coast or in areas of industrial pollution.
- High humidity accelerates corrosion especially when temperatures range just above the freezing point.
- Wetness or dampness to certain parts of your vehicle for an extended period of time, may cause corrosion even though other parts of the vehicle may be dry.
- High ambient temperatures can cause corrosion to those components of the vehicle which do not dry quickly due to lack of proper ventilation.

The above signifies the necessity to keep your vehicle, particularly the underside, as clean as possible and to repair any damage to paint or protective coatings as soon as possible.

To help prevent corrosion on your Toyota, follow these guidelines:

Wash your vehicle frequently. It is, of course, necessary to keep your vehicle clean by regular washing, but to prevent corrosion, the following points should be observed:

- If you drive on salted roads in the winter or if you live near the ocean, you should hose off the undercarriage at least once a month to minimize corrosion.
- High pressure water or steam is effective for cleaning the vehicle’s underside and wheel housings. Pay particular attention to these areas as it is difficult to see all the mud and dirt. It will do more harm than good to simply wet the mud and debris without removing. The lower edge of doors, rocker panels and frame members have drain holes which should not be allowed to clog with dirt as trapped water in these areas can cause corrosion.
- Wash the underside of the vehicle thoroughly when winter is over.

See “Washing and waxing your Toyota” on page 383 for more tips.

Check the condition of your vehicle’s paint and trim. If you find any chips or scratches in the paint, touch them up immediately to prevent corrosion from starting. If the chips or scratches have gone through the bare metal, have a qualified body shop make the repair.

Check the interior of your vehicle. Water and dirt can accumulate under the floor mats and could cause corrosion. Occasionally check under the mats to make sure the area is dry. Be particularly careful when transporting chemicals, cleansers, fertilizers, salt, etc; these should be transported in proper containers. If a spill or leak should occur, immediately clean and dry the area.

Use mud shields on your wheels. If you drive on salted or gravel roads, mud shields help protect your vehicle. Full–size shields, which come as near to the ground as possible, are the best. We recommend that the fittings and the area where the shields are installed be treated to resist corrosion. Your Toyota dealer will be happy to assist in supplying and installing the shields if they are recommended for your area.

Keep your vehicle in a well ventilated garage or a roofed place. Do not park your vehicle in a damp, poorly ventilated garage. If you wash your vehicle in the garage, or if you drive it covered with water or snow, your garage may be so damp as to cause corrosion. Even if your garage is heated, a wet vehicle can corrode if the ventilation is poor.

Washing and waxing your Toyota

Washing your Toyota

Keep your vehicle clean by regular washing.

The following cases may cause weakness to the paint or corrosion to the body and parts. Wash your vehicle as soon as possible.

- When driving in a coastal area
- When driving on a road sprinkled with antifreeze
- When exposed to coal tar, tree sap, bird droppings and carcass of an insect
- When driving in areas where there is a lot of smoke, soot, dust, iron dust or chemical substances
- When the vehicle becomes remarkably dirty with dust and mud

Hand–washing your Toyota

Work in the shade and wait until the vehicle body is not warm to the touch.

⚠ CAUTION

- **When cleaning under floor or chassis, be careful not to injure your hands.**
- **Exhaust gases cause the exhaust pipe to become quite hot. When washing the vehicle, be careful not to touch the pipe until it has cooled sufficiently, as touching a hot exhaust pipe can cause burns.**

NOTICE

When the front wiper arms need to be lifted away from the windshield to wash the vehicle, raise the arm on the driver side first. Conversely, when returning the wipers to their original positions, fold down the arm on the front passenger side first. Failure to perform the operations in the correct order results in damage.

1. Rinse off loose dirt with a hose. Remove any mud or road salt from the underside of the vehicle or the wheel wells.
2. Wash with a mild car–wash soap, mixed according to the manufacturer’s instructions. Use a soft cotton mitt and keep it wet by dipping it frequently into the wash water. Do not rub hard—let the soap and water remove the dirt.

Fuel filler door: Do not apply water (high–pressure car wash, for example) at or near the fuel tank inlet with the fuel filler door opened. If the water enters the air vent, you may experience trouble with refueling or rough engine idling.

Plastic wheel ornaments: The plastic wheel ornaments are damaged easily by organic substances. If any organic substances splashes an ornament, be sure to wash them off with water and check if the ornament is damaged.

Aluminum wheels: Use only a mild soap or neutral detergent.

NOTICE

- ***Do not use corrosive chemical–based cleaners on your wheels. (Example: hydrofluoric acid)***
- ***Do not use steam cleaners or the chemicals therein to clean your wheels.***
- ***Do not use scouring pads, wire brushes, or coarse abrasives to clean your wheels.***
- ***Do not use alcohol, solvents, gasoline, or other non–neutral detergents, because they may alter the wheel’s appearance and resistance to corrosion.***

Plastic bumpers: Wash carefully. Do not scrub with abrasive cleaners. The bumper faces are soft.

Exterior lights: Wash carefully. Do not use organic substances or scrub them with a hard brush. This may damage the surfaces of the lights.

Road tar: Remove with turpentine or cleaners that are marked safe for painted surfaces.

3. Rinse thoroughly—dried soap can cause streaking. In hot weather you may need to rinse each section right after you wash it.
4. To prevent water spots, dry the vehicle using a clean soft cotton towel. Do not rub or press hard—you might scratch the paint.

NOTICE

- ***Do not use organic substances (gasoline, kerosene, benzine or strong solvents), which may be toxic or cause damage.***
- ***Do not scrub any part of the vehicle with a hard brush, which may cause damage.***

Automatic car wash

Your vehicle may be washed in an automatic car wash, but remember that the paint can be scratched by some types of brushes, unfiltered washing water, or the washing process itself. Scratching reduces paint durability and gloss, especially on darker colors. The manager of the car wash should be able to advise you whether the process is safe for the paint on your vehicle.

NOTICE

To prevent damage to the antenna, make sure it is removed before driving your Toyota through an automatic car wash.

Waxing your Toyota

Polishing and waxing is recommended to maintain the original beauty of your Toyota’s finish.

Apply wax once a month or if the vehicle surface does not repel water well.

1. Always wash and dry the vehicle before you begin waxing, even if you are using a combined cleaner and wax.
2. Use a good quality polish and wax. If the finish has become extremely weathered, use a car–cleaning polish, followed by a separate wax. Carefully follow the manufacturer’s instructions and precautions. Be sure to polish and wax the chrome trim as well as the paint.

Windshield washer nozzles: Make sure that the nozzles do not become blocked when waxing. If a nozzle becomes blocked, contact your Toyota dealer to have the vehicle serviced.

NOTICE

If a nozzle becomes blocked, do not try to clear it with a pin or other object. The nozzle will be damaged.

Exterior lights: Do not apply wax on the surfaces of the lights. Wax may cause damage to the lenses. If you accidentally put wax on the light surfaces, wipe or wash it off.

3. Wax the vehicle again when water does not bead but remains on the surface in large patches.

Cleaning the interior

CAUTION

- **Vehicles with side airbags and curtain shield airbags:**

  Be careful not to splash water or spill liquid on the floor. This may prevent the side airbag and curtain shield airbag from activating correctly, resulting in serious injury.
- **Do not wash the vehicle floor with water, or allow water to get onto the floor when cleaning the vehicle interior or exterior. Water may get into audio components or other electrical components above or under the floor carpet (or mat) and cause a malfunction; and it may cause body corrosion.**

Vinyl interior

The vinyl upholstery may be easily cleaned with a mild soap or detergent and water.

First vacuum over the upholstery to remove loose dirt. Then, using a sponge or soft cloth, apply the soap solution to the vinyl. After allowing it to soak in for a few minutes to loosen the dirt, remove the dirt and wipe off the soap with a clean damp cloth. If all the dirt do not come off, repeat the procedure. Commercial foaming–type vinyl cleaners are also available which work well. Follow the manufacturer’s instructions.

NOTICE

Do not use solvent, thinner, gasoline or window cleaner on the interior.

Carpets

Use a good foam–type shampoo to clean the carpets.

Begin by vacuuming thoroughly to remove as much dirt as possible. Several types of foam cleaners are available; some are in aerosol cans and others are powders or liquids which you mix with water to produce a foam. To shampoo the carpets, use a sponge or brush to apply the foam. Rub in overlapping circles.

Do not apply water—the best results are obtained by keeping the carpet as dry as possible. Read the shampoo instructions and follow them closely.

Seat belts

The seat belts may be cleaned with mild soap and water or with lukewarm water.

Use a cloth or sponge. As you are cleaning, check the belts for excessive wear, fraying, or cuts.

NOTICE

- ***Do not use dye or bleach on the belts—it may weaken them.***
- ***Do not use the belts until they become dry.***

Windows

The windows may be cleaned with any household window cleaner.

NOTICE

When cleaning the inside of the rear window, be careful not to scratch or damage the heater wires or connectors.

Air conditioning control panel, audio panel, instrument panel, console panel, and switches

Use a soft damp cloth for cleaning.

Soak a clean soft cloth in water or lukewarm water then lightly wipe off dirt.

NOTICE

- ***Do not use organic substances (solvents, kerosene, alcohol, gasoline, etc.) or alkaline or acidic solutions. These chemicals can cause discoloring, staining or peeling of the surface.***
- ***If you use cleaners or polishing agents, make sure their ingredients do not include the substances mentioned above.***
- ***If you use a liquid car freshener, do not apply the liquid onto the vehicle’s interior surfaces. It may contain the ingredients mentioned above. Immediately clean any spill using the method mentioned above.***

Leather interior

The leather upholstery may be cleaned with neutral detergent for wool.

Remove dirt using a soft cloth dampened with 5% solution of neutral detergent for wool. Then thoroughly wipe off all traces of detergent with a clean damp cloth.

After cleaning or whenever any part of the leather gets wet, dry with a soft clean cloth. Allow the leather to dry in a ventilated shaded area.

NOTICE

- ***If a stain should fail to come out with a neutral detergent, apply a cleaner that does not contain an organic solvent.***
- ***Never use organic substances such as benzine, alcohol or gasoline, or alkaline or acid solutions for cleaning the leather as these could cause discoloring.***
- ***Use of a nylon brush or synthetic fiber cloth, etc. may scratch the fine grained surface of the leather.***
- ***Mildew may develop on soiled leather upholstery. Be especially careful to avoid oil spots. Try to keep your upholstery always clean.***
- ***Long exposure to direct sunlight may cause the leather surface to harden and shrink. Keep your vehicle in a shaded area, especially in the summer.***
- ***The interior of your vehicle is apt to heat up on hot summer days, so avoid placing on the upholstery items made of vinyl or plastic or containing wax as these tend to stick to leather when warm.***
- ***Improper cleaning of the leather upholstery could result in discoloration or staining.***

If you have any questions about the cleaning of your Toyota, your local Toyota dealer will be pleased to answer them.

SECTION 6

VEHICLE MAINTENANCE AND CARE

Vehicle maintenance and care

Maintenance requirements 390
General maintenance 391
Does your vehicle need repairing? 393
Emissions Inspection and Maintenance (I/M) programs 394

For scheduled maintenance information, please refer to the “Scheduled Maintenance Guide” or “Owner’s Manual Supplement”.

Maintenance requirements

Your Toyota vehicle has been designed for fewer maintenance requirements with longer service intervals to save both your time and money. However, each regular maintenance, as well as day–to–day care, is more important than ever before to ensure smooth, trouble–free, safe, and economical driving.

It is the owner’s responsibility to make sure the specified maintenance, including general maintenance service, is performed. Note that both the new vehicle and emission control system warranties specify that proper maintenance and care must be performed. See “Owner’s Warranty Information Booklet” or “Owner’s Manual Supplement” for complete warranty information.

General maintenance

General maintenance items are those day–to–day care practices that are important to your vehicle for proper operation. It is the owner’s responsibility to ensure that the general maintenance items are performed regularly.

These checks or inspections can be done either by yourself or a qualified technician, or if you prefer, your Toyota dealer will be pleased to do them at a nominal cost.

Scheduled maintenance

The scheduled maintenance items listed in the “Scheduled Maintenance Guide” or “Owner’s Manual Supplement” are those required to be serviced at regular intervals.

For details of your maintenance schedule, read the “Scheduled Maintenance Guide” or “Owner’s Manual Supplement”.

It is recommended that any replacement parts used for maintenance or for the repair of the emission control system be Toyota supplied.

The owner may elect to use non–Toyota supplied parts for replacement purposes without invalidating the emission control system warranty. However, use of replacement parts which are not of equivalent quality may impair the effectiveness of the emission control systems.

You may also elect to have maintenance, replacement, or repair of the emission control devices and system performed by any automotive repair establishment or individual without invalidating this warranty. See “Owner’s Warranty Information Booklet” or “Owner’s Manual Supplement” for complete warranty information.

Where to go for service?

Toyota technicians are well–trained specialists and are kept up to date with the latest service information through technical bulletins, service tips, and in–dealership training programs. They learn to work on Toyotas before they work on your vehicle, rather than while they are working on it.

You can be confident that your Toyota dealer’s service department performs the best job to meet the maintenance requirements on your vehicle—reliably and economically.

Your copy of the repair order is proof that all required maintenance has been performed for warranty coverage. If any problems should arise with your vehicle while under warranty, your Toyota dealer will promptly take care of it. Again, be sure to keep a copy of the repair order for any service performed on your Toyota.

What about do–it–yourself maintenance?

Many of the maintenance items are easy to do yourself if you have a little mechanical ability and a few basic automotive tools. Simple instructions for how to perform them are presented on page 395 in Section 7.

If you are a skilled do–it–yourself mechanic, the Toyota service manuals are recommended. Please be aware that do–it–yourself maintenance can affect your warranty coverage. See “Owner’s Warranty Information Booklet” or “Owner’s Manual Supplement” for the details.

General maintenance

Listed below are the general maintenance items that should be performed as frequently as specified. In addition to checking the items listed, if you notice any unusual noise, smell or vibration, you should investigate the cause or take your vehicle to your Toyota dealer or a qualified service shop immediately. It is recommended that any problem you notice be brought to the attention of your dealer or the qualified service shop for their advice.

⚠ CAUTION

Make these checks only with adequate ventilation if you run the engine.

IN THE ENGINE COMPARTMENT

Items listed below should be checked from time to time, e.g. each time when refueling.

Washer fluid

Make sure there is sufficient fluid in the tank. See page 422 in Section 7–3 for additional information.

Engine coolant level

Make sure the coolant level is between the “FULL” and “LOW” lines on the see–through reservoir when the engine is cold. See page 406 in Section 7–2 for additional information.

Radiator, condenser and hoses

Check that the front of the radiator and condenser are clean and not blocked with leaves, dirt, or insects. See page 407 in Section 7–2 for additional information.

Battery electrolyte level

Check the battery condition by the indicator color. See page 418 in Section 7–3 for additional information.

Brake fluid level

Make sure the brake fluid level is correct. See page 407 in Section 7–2 for additional information.

Engine oil level

Check the level on the dipstick with the engine turned off and the vehicle parked on a level spot. See page 404 in Section 7–2 for additional information.

Exhaust system

If you notice any change in the sound of the exhaust or smell exhaust fumes, have the cause located and corrected immediately. (See “Engine exhaust cautions” on page 313 in Section 2.)

INSIDE THE VEHICLE

Items listed below should be checked regularly, e.g. while performing periodic services, cleaning the vehicle, etc.

Lights

Make sure the headlights, stop lights, tail lights, turn signal lights, and other lights are all working.

Service reminder indicators and warning buzzers

Check that all service reminder indicators and warning buzzers function properly.

Steering wheel

Check that it has the specified free play. Be alert for changes in steering condition, such as hard steering or strange noise.

Seats

Check that all seat controls such as seat adjusters, seatback recliner, etc. operate smoothly and that all latches lock securely in any position. For folding–down rear seatbacks, check that the latches lock securely.

Seat belts

Check that the seat belt system such as buckles, retractors and anchors operate properly and smoothly. Make sure the belt webbing is not cut, frayed, worn or damaged.

Accelerator pedal

Check the pedal for smooth operation and uneven pedal effort or catching.

Brake pedal

Check the pedal for smooth operation and that the pedal has the proper clearance. Check the brake booster function.

Brakes

In a safe place, check that the brakes do not pull to one side when applied.

Parking brake

Check that the lever has the proper travel and that, on a safe incline, your vehicle is held securely with only the parking brake applied.

Automatic transmission “Park” mechanism

On a safe incline, check that your vehicle is held securely with the selector lever in “P” position and all brakes released.

OUTSIDE THE VEHICLE

Items listed below should be performed from time to time, unless otherwise specified.

Fluid leaks

Check underneath for leaking fuel, oil, water or other fluid after the vehicle has been parked for a while. If you smell fuel fumes or notice any leak, have the cause found and corrected immediately.

Doors and engine hood

Check that all doors and back door operate smoothly and all latches lock securely. Make sure the engine hood secondary latch secures the hood from opening when the primary latch is released.

Tire inflation pressure

Check the pressure with a gauge every two weeks, or at least once a month. See page 408 in Section 7–2 for additional information.

Tire surface and wheel nuts

Check the tires carefully for cuts, damage or excessive wear. See page 410 in Section 7–2 for additional information. When checking the tires, make sure no nuts are missing, and check the nuts for looseness. Tighten them if necessary.

Tire rotation

Rotate the tires according to the maintenance schedule. (For scheduled maintenance information, please refer to the “Scheduled Maintenance Guide” or “Owner’s Manual Supplement”.) See page 412 in Section 7–2 for additional information.

Does your vehicle need repairing?

Be on the alert for changes in performance, sounds, and visual tip–offs that indicate service is needed. Some important clues are as follows:

- Engine missing, stumbling, or pinging
- Appreciable loss of power
- Strange engine noises
- A leak under the vehicle (However, water dripping from the air conditioning after use is normal.)
- Change in exhaust sound (This may indicate a dangerous carbon monoxide leak. Drive with the windows open and have the exhaust system checked immediately.)
- Flat–looking tire; excessive tire squeal when cornering; uneven tire wear
- Vehicle pulls to one side when driving straight on a level road
- Strange noises related to suspension movement
- Loss of brake effectiveness; spongy feeling brake pedal; pedal almost touches floor; vehicle pulls to one side when braking
- Engine coolant temperature continually higher than normal

If you notice any of these clues, take your vehicle to your Toyota dealer as soon as possible. It probably needs adjustment or repair.

⚠ CAUTION

Do not continue driving with the vehicle unchecked. It could result in serious vehicle damage and possibly personal injury.

Emissions Inspection and Maintenance (I/M) programs

Some states have vehicle emission inspection programs which include OBD (On–Board Diagnostics) checks.

The OBD system monitors the operation of the emission control system. When the OBD system determines that a problem exists somewhere in the emission control system, the malfunction indicator lamp comes on. In this case, your vehicle may not pass the I/M test and need to be repaired. Contact your Toyota dealer to service the vehicle.

Even if the malfunction indicator lamp does not come on, your vehicle may not pass the I/M test as readiness codes have not been set in the OBD system.

Readiness codes are automatically set during ordinary driving. However, when the battery is disconnected or run down, the codes are erased. Also, depending on your driving habits, the codes may not be completely set.

Also, if the malfunction indicator lamp had come on recently due to temporary malfunction such as a loose fuel tank cap, your vehicle may not pass the I/M test.

The malfunction indicator lamp will go off after taking several driving trips, but the error code in the OBD system will not be cleared unless about 40 trips or more are taken.

If your vehicle does not pass the I/M test even the malfunction indicator lamp does not come on, contact your Toyota dealer to prepare the vehicle for re–testing.

SECTION 7 – 1

DO–IT–YOURSELF MAINTENANCE

Introduction

Engine compartment overview 396
Fuse locations 398
Do–it–yourself service precautions 399
Parts and tools 400
Positioning a floor jack 401

Engine compartment overview

▶2.4 L 4–cylinder (2AZ–FE) engine

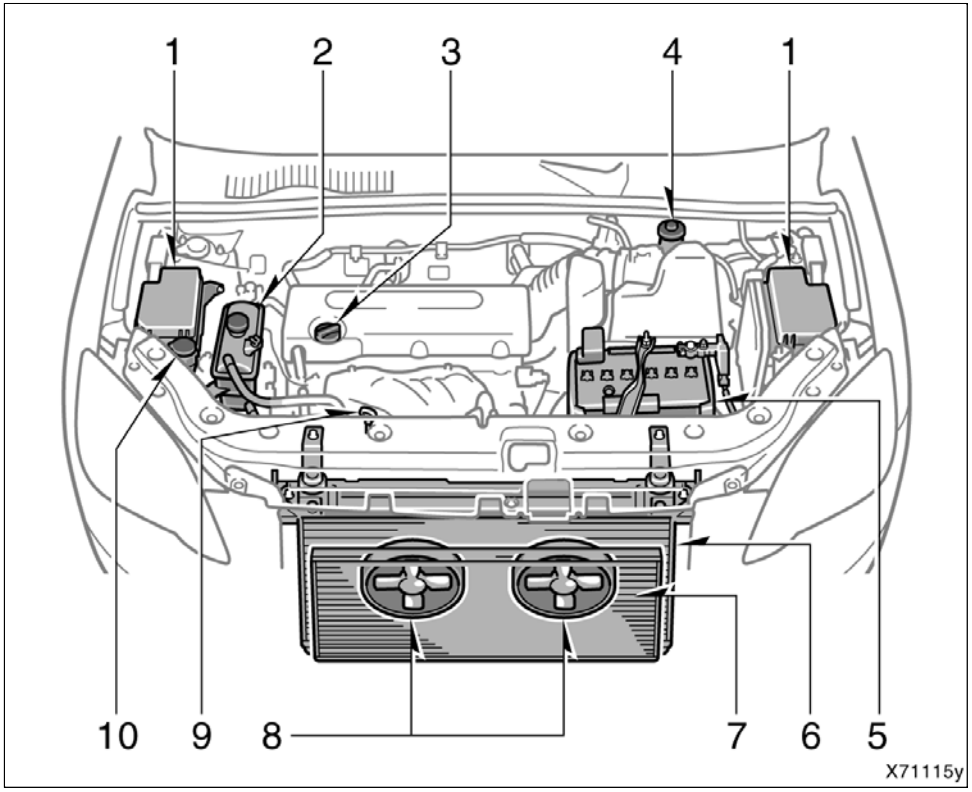

1. Fuse blocks
2. Engine coolant reservoir
3. Engine oil filler cap
4. Brake fluid reservoir
5. Battery
6. Radiator
7. Condenser
8. Electric cooling fans
9. Engine oil level dipstick
10. Windshield and rear window washer fluid tank

▶3.5 L V6 (2GR-FE) engine

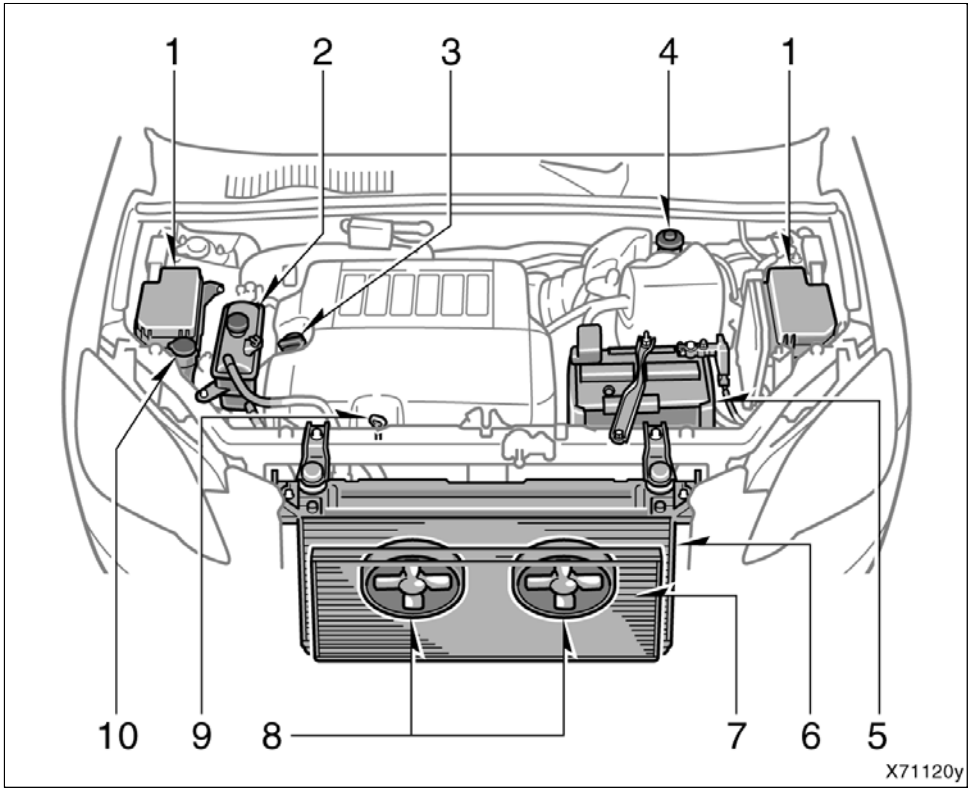

1. Fuse blocks
2. Engine coolant reservoir
3. Engine oil filler cap
4. Brake fluid reservoir
5. Battery
6. Radiator
7. Condenser
8. Electric cooling fans
9. Engine oil level dipstick
10. Windshield and rear window washer fluid tank

Fuse locations

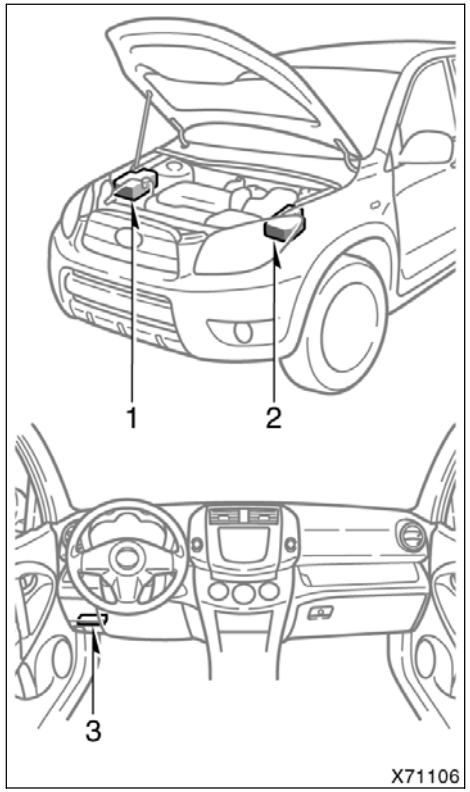

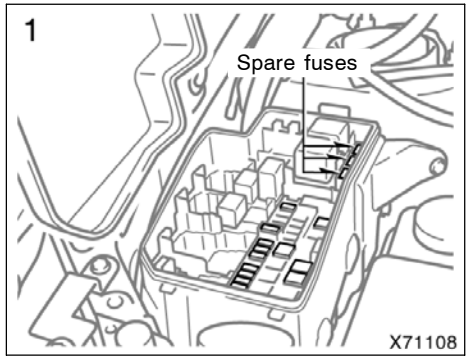

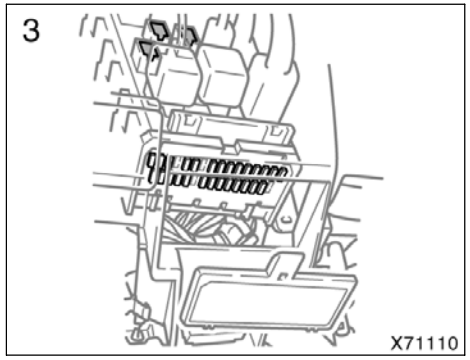

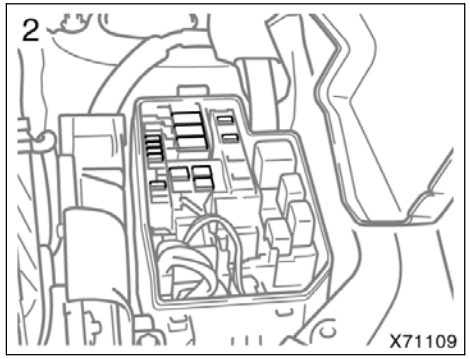

Do–it–yourself service precautions

If you perform maintenance by yourself, be sure to follow the correct procedure given in this Section.

You should be aware that improper or incomplete servicing may result in operating problems.

Performing do–it–yourself maintenance during the warranty period may affect your warranty coverage. Read the separate Toyota Warranty statement for details and suggestions.

This Section gives instructions only for those items that are relatively easy for an owner to perform. As explained in Section 6, there are still a number of items that must be done by a qualified technician with special tools.

For information on tools and parts for do–it–yourself maintenance, see “Parts and tools” on page 400 in this Section.

Utmost care should be taken when working on your vehicle to prevent accidental injury. Here are a few precautions that you should be especially careful to observe:

⚠ CAUTION

- **When the engine is running, keep hands, clothing, and tools away from the moving fan and engine drive belts. (Removing rings, watches, and ties is advisable.)**
- **Right after driving, the engine compartment—the engine, radiator, exhaust manifold and spark plug boots, etc.—will be hot. So be careful not to touch them. Oil, fluids and spark plugs may also be hot.**
- **If the engine is hot, do not remove the coolant reservoir cap or loosen the drain plugs to prevent burning yourself.**
- **Do not leave anything that may burn easily, such as paper or rags, in the engine compartment.**
- **Do not smoke, cause sparks or allow open flames around fuel or the battery. Their fumes are flammable.**
- **Do not get under your vehicle with just the body jack supporting it. Always use automotive jack stands or other solid supports.**
- **Be sure that the engine is off if you work near the electric cooling fans or radiator grille. With the engine on, the electric cooling fans will automatically start to run if the engine coolant temperature is high and/or the air conditioning is on.**
- **Use eye protection whenever you work on or under your vehicle where you may be exposed to flying or falling material, fluid spray, etc.**
- **Used engine oil contains potentially harmful contaminants which may cause skin disorders such as inflammation or skin cancer, so care should be taken to avoid prolonged and repeated contact with it. To remove used engine oil from your skin, wash thoroughly with soap and water.**
- **Do not leave used oil within the reach of children.**
- **Dispose of used oil and filter only in a safe and acceptable manner. Do not dispose of used oil and filter in household trash, in sewers or onto the ground. Call your dealer or a service station for information concerning recycling or disposal.**

- **Be extremely cautious when working on the battery. It contains poisonous and corrosive sulfuric acid.**

NOTICE

- ***Remember that battery and ignition cable carry high currents or voltages. Be careful of accidentally causing a short circuit.***
- ***Add only “Toyota Super Long Life Coolant” or similar high quality ethylene glycol based non–silicate, non–amine, non–nitrite, and non–borate coolant with long–life hybrid organic acid technology to fill the radiator. “Toyota Super Long Life Coolant” is a mixture of 50% coolant and 50% deionized water (for the U.S.A.) or 55% coolant and 45% deionized water (for Canada).***
- ***If you spill some of the coolant, be sure to wash it off with water to prevent it from damaging the parts or paint.***
- ***Do not allow dirt or anything else to fall through the spark plug holes.***
- ***Use only spark plugs of the specified type. Using other types will cause engine damage, loss of performance or radio noise.***
- ***Do not reuse iridium–tipped spark plugs by cleaning or regapping.***
- ***Do not overfill automatic transmission fluid, or the transmission could be damaged.***
- ***Do not drive with the air cleaner filter removed, or excessive engine wear could result. Also backfiring could cause a fire in the engine compartment.***
- ***Be careful not to scratch the glass surface with the wiper frame.***
- ***When closing the engine hood, check to see that you have not forgotten any tools, rags, etc.***

Parts and tools

Here is a list of parts and tools you will need to perform do–it–yourself maintenance. Remember all Toyota parts are designed in metric sizes, so your tools must be metric.

CHECKING THE ENGINE OIL LEVEL

Parts (if level is low):

- “Toyota Genuine Motor Oil” or equivalent

  See page 404 in Section 7–2 for details about engine oil selection.

Tools:

- Rag or paper towel
- Funnel (only for adding oil)

CHECKING THE ENGINE COOLANT LEVEL

Parts (if level is low):

- “Toyota Super Long Life Coolant” or similar high quality ethylene glycol based non–silicate, non–amine, non–nitrite, and non–borate coolant with long–life hybrid organic acid technology.

  “Toyota Super Long Life Coolant” is a mixture of 50% coolant and 50% deionized water (for the U.S.A.) or 55% coolant and 45% deionized water (for Canada).

Tools:

- Funnel (only for adding coolant)

CHECKING BRAKE FLUID

Parts (if level is low):

- SAE J1703 or FMVSS No.116 DOT 3 brake fluid

Tools:

- Rag or paper towel
- Funnel (only for adding fluid)

CHECKING BATTERY CONDITION

Tools:

- Warm water
- Baking soda
- Grease
- Conventional wrench (for terminal clamp bolts)

CHECKING AND REPLACING FUSES

Parts (if replacement is necessary):

- Fuse with same amperage rating as original

ADDING WASHER FLUID

Parts:

- Water
- Washer fluid containing antifreeze (for winter use)

Tools:

- Funnel

REPLACING LIGHT BULBS

Parts:

- Bulb with same number and wattage rating as original (See charts in “Replacing light bulbs” on page 422 in Section 7–3.)

Tools:

- Screwdriver

Positioning a floor jack

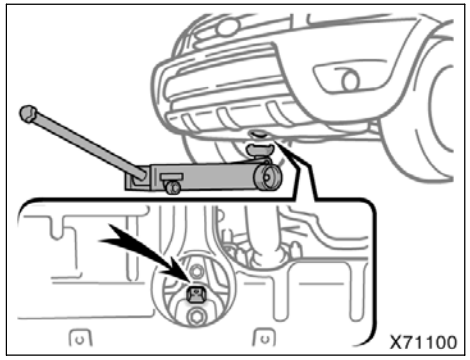

Front

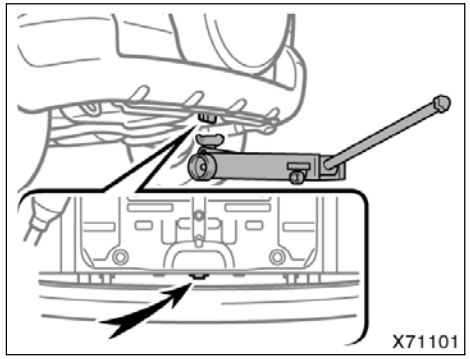

Rear

When jacking up your vehicle with the floor jack, position the jack correctly as shown in the illustrations.

CAUTION

When jacking, be sure to observe the following to reduce the possibility of death or serious injury:

- Follow jacking instructions.
- Do not put any part of your body under the vehicle supported by the floor jack. Personal injury may occur.
- Do not start or run the engine while your vehicle is supported by the floor jack.
- Stop the vehicle on a level firm ground, firmly set the parking brake and put the transmission in “P”. Block the wheels on the opposite side of the floor jack up point if necessary.
- Make sure to set the floor jack properly in the jack point. Raising the vehicle with floor jack improperly positioned will damage the vehicle or may allow the vehicle to fall off the floor jack and cause personal injury.
- Never get under the vehicle when the vehicle is supported by the floor jack alone; use vehicle support stands.
- Do not raise the vehicle with someone in the vehicle.
- When raising the vehicle, do not place any objects on top of or underneath the floor jack.

NOTICE

Make sure to place the floor jack correctly, or your vehicle may be damaged.

SECTION 7-2

DO-IT-YOURSELF MAINTENANCE

Engine and Chassis

Checking the engine oil level 404
Checking the engine coolant level 406
Checking the radiator and condenser 407
Checking brake fluid 407
Checking tire inflation pressure 408
Checking and replacing tires 410
Rotating tires 412
Installing snow tires and chains 413
Replacing wheels 415
Aluminum wheel precautions 416

Checking the engine oil level

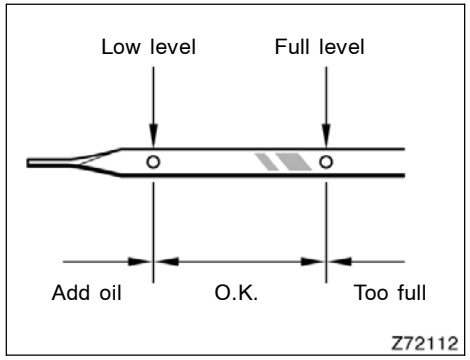

With the engine at operating temperature and turned off, check the oil level on the dipstick.

1. To get a correct reading, the vehicle should be on level ground. After turning off the engine, wait a few minutes for the oil to drain back into the bottom of the engine.
2. Pull the dipstick out, hold a rag under the end and wipe it clean.
3. Reinsert the dipstick—push it in as far as it will go, or the reading will not be correct.
4. Pull the dipstick out and look at the oil level while holding a rag under the end.

⚠ CAUTION

Be careful not to touch the hot exhaust manifold.

NOTICE

Be careful not to drop engine oil on the vehicle components.

If the oil level is below or only slightly above the low level, add engine oil of the same type as already in the engine.

Remove the oil filler cap and add engine oil in small quantities at a time, checking the dipstick. We recommend that you use a funnel when adding oil.

The approximate quantity of oil needed to raise the level between low and full on the dipstick is indicated as follows:

2.4 L 4–cylinder (2AZ–FE) engine
1.1 L (1.2 qt., 1.0 Imp. qt.)
3.5 L V6 (2GR–FE) engine
1.5 L (1.6 qt., 1.3 Imp. qt.)

For the engine oil capacity, see “Service specifications” on page 429 in Section 8.

When the level reaches within the correct range, install the filler cap hand–tight.

NOTICE

- ***Be careful not to spill engine oil on the vehicle components.***
- ***Avoid overfilling, or the engine could be damaged.***
- ***Check the oil level on the dipstick once again after adding the oil.***

ENGINE OIL SELECTION

“Toyota Genuine Motor Oil” is used in your Toyota vehicle. Use Toyota approved “Toyota Genuine Motor Oil” or equivalent to satisfy the following grade and viscosity.

Oil grade:
ILSAC multigrade engine oil

Recommended viscosity:

2.4 L 4–cylinder (2AZ–FE) engine
SAE 5W–20 or 0W–20

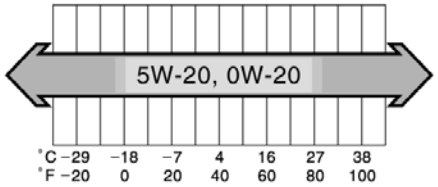

OIL016

SAE 5W–20 or 0W–20 engine oil may be used. However, SAE 0W–20 is the best choice for good fuel economy and good starting in cold weather.

3.5 L V6 (2GR–FE) engine
SAE 5W–30

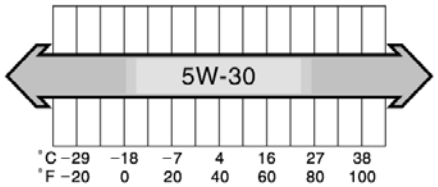

OIL008

SAE 5W–30 is the best choice for good fuel economy, and good starting in cold weather.

If SAE 5W–30 oil is not available, SAE 10W–30 oil may be used. However, it should be replaced with SAE 5W–30 at the next oil change.

API-02

Oil identification mark

The ILSAC (International Lubricant Standardization and Approval Committee) Certification Mark is added to some oil containers to help you select the oil you should use.

To ensure excellent lubrication performance for your engine, “Toyota Genuine Motor Oil” is available, which has been specifically tested and approved for all Toyota engines.

Please contact your Toyota dealer for further details about “Toyota Genuine Motor Oil”.

Checking the engine coolant level

Look at the see–through coolant reservoir when the engine is cold. The coolant level is satisfactory if it is between the “FULL” and “LOW” lines on the reservoir. If the level is low, add the coolant. (For the coolant type, see “Coolant type selection” described below.)

The coolant level in the reservoir will vary with engine temperature. However, if the level is below the “LOW” line, add coolant. Bring the level between the “FULL” and “LOW” lines.

If the coolant level drops within a short time after replenishing, there may be a leak in the system. Visually check the radiator, hoses, coolant reservoir cap and drain cock and water pump.

If you can find no leak, have your Toyota dealer test the cap pressure and check for leaks in the cooling system.

⚠ CAUTION

To prevent burning yourself, do not remove the coolant reservoir cap when the engine is hot.

Coolant type selection

Use of improper coolants may damage your engine cooling system.

Only use “Toyota Super Long Life Coolant” or similar high quality ethylene glycol based non–silicate, non–amine, non–nitrite, and non–borate coolant with long–life hybrid organic acid technology. (Coolant with long–life hybrid organic acid technology consists of the combination of low phosphates and organic acids.)

For the U.S.A.—“Toyota Super Long Life Coolant” is a mixture of 50% coolant and 50% deionized water. This coolant provides protection down to about –35°C (–31°F).

For Canada—“Toyota Super Long Life Coolant” is a mixture of 55% coolant and 45% deionized water. This coolant provides protection down to about –42°C (–44°F).

NOTICE

Do not use plain water alone.

Toyota recommends “Toyota Super Long Life Coolant”, which has been tested to ensure that it will not cause corrosion nor result in malfunction of your engine coolant system with proper usage. “Toyota Super Long Life Coolant” is formulated with long–life hybrid organic acid technology and has been specifically designed to avoid engine cooling system malfunction on Toyota vehicles.

Please contact your Toyota dealer for further details.

Checking the radiator and condenser

If any of the above parts are extremely dirty or you are not sure of their condition, take your vehicle to a Toyota dealer.

⚠ CAUTION

To prevent burning yourself, be careful not to touch the radiator or condenser when the engine is hot.

NOTICE

To prevent damage to the radiator and condenser, do not perform the work by yourself.

Checking brake fluid

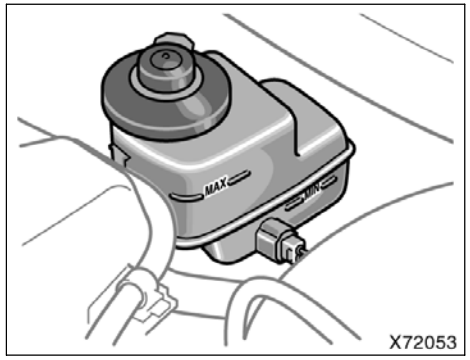

To check the fluid level, simply look at the see–through reservoir. The level should be between the “MAX” and “MIN” lines on the reservoir.

It is normal for the brake fluid level to go down slightly as the brake pads wear. So be sure to keep the reservoir filled.

If the reservoir needs frequent refilling, it may indicate a serious mechanical problem.

If the level is low, add SAE J1703 or FMVSS No.116 DOT 3 brake fluid to the brake reservoir.

Remove and replace the reservoir cap by hand. Fill the brake fluid to the dotted line. This brings the fluid to the correct level when you put the cap back on.

Use only newly opened brake fluid. Once opened, brake fluid absorbs moisture from the air, and excess moisture can cause a dangerous loss of braking.

CAUTION

Take care when filling the reservoir because brake fluid can harm your hands or eyes. If fluid gets on your hands or in your eyes, flush the affected area with clean water immediately. If you still feel uncomfortable with your hands or eyes, go to the doctor.

NOTICE

If you spill some of the fluid, be sure to wipe it off to prevent it from damaging the parts or paintwork.

Checking tire inflation pressure

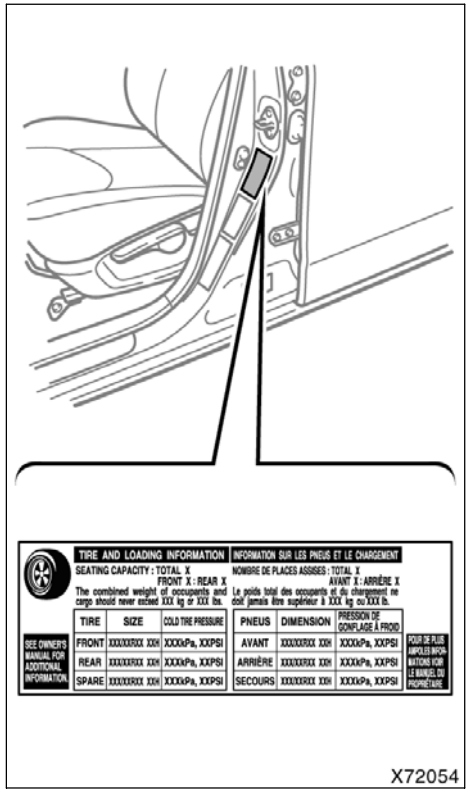

Keep your tire inflation pressures at the proper level.

The recommended cold tire inflation pressures, tire sizes and the combined weight of occupants and cargo (vehicle capacity weight) are described on page 428 and 433. They are also on the tire and loading information label.

You should check the tire inflation pressure every two weeks, or at least once a month. And do not forget the spare!

The following instructions for checking tire inflation pressure should be observed:

- **The pressure should be checked only when the tires are cold.** If your vehicle has been parked for at least 3 hours and has not been driven for more than 1.5 km or 1 mile since, you will get an accurate cold tire inflation pressure reading.
- **Always use a tire pressure gauge.** The appearance of a tire can be misleading. Besides, tire inflation pressures that are even just a few pounds off can degrade ride and handling.
- **Do not bleed or reduce tire inflation pressure after driving.** It is normal for the tire inflation pressure to be higher after driving.
- **Never exceed the vehicle capacity weight.** Passenger and luggage weight should be located so that the vehicle is balanced.

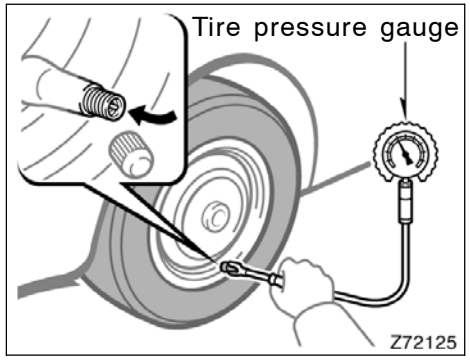

INSPECTION AND ADJUSTMENT PROCEDURE

1. Remove the tire valve cap.
2. Press the tip of the tire pressure gauge to the tire valve.
3. Read the pressure using the graduations of the gauge.
4. In case the tire inflation pressure is not within the prescribed range, insert the compressed air from the valve. In case of applying too much air, press the center of the valve and release the air to adjust.
5. After completing the tire inflation pressure measurement and adjustment, apply soapy water to the valve and check for leakage.
6. Install the tire valve cap.

If a gauge and air pump are not available, have your vehicle checked by your Toyota dealer.

⚠ CAUTION

Be sure to reinstall the tire valve caps. Without the valve caps, dirt or moisture could get into the valve core and cause air leakage. If the caps have been lost, have new ones put on as soon as possible.

Incorrect tire inflation pressure may waste fuel, reduce the comfort of driving, reduce tire life and make your vehicle less safe to drive.

If a tire frequently needs refilling, have it checked by your Toyota dealer.

⚠ CAUTION

Keep your tires properly inflated. Otherwise, the following conditions may occur and cause an accident resulting in death or serious injuries.

Low tire pressure (underinflation)—

- **Excessive wear**
- **Uneven wear**
- **Poor handling**
- **Possibility of blowouts from an overheated tire**
- **Poor sealing of the tire bead**
- **Wheel deformation and/or tire separation**
- **A greater possibility of tire damage from road hazards**

High tire pressure (overinflation)—

- **Poor handling**
- **Excessive wear**
- **Uneven wear**
- **A greater possibility of tire damage from road hazards**

Checking and replacing tires

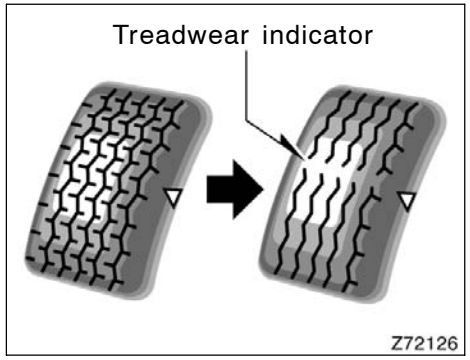

CHECKING YOUR TIRES

Check the tire’s tread for treadwear indicators. If the indicators show, replace the tires. The location of treadwear indicators is shown by the “TWI” or “Δ” marks, etc., molded on the sidewall of each tire.

The tires on your Toyota have built–in treadwear indicators to help you know when the tires need replacement. When the tread depth wears to 1.6 mm (0.06 in.) or less, the indicators will appear. If you can see the indicators in two or more adjacent grooves, the tire should be replaced. The lower the tread, the higher the risk of skidding.

The effectiveness of snow tires is lost if the tread wears down below 4 mm (0.16 in.).

If you have tire damage such as cuts, splits, cracks deep enough to expose the fabric, or bulges indicating internal damage, the tire should be replaced.

If a tire often goes flat or cannot be properly repaired due to the size or location of a cut or other damage, it should be replaced. If you are not sure, consult with your Toyota dealer.

If air loss occurs while driving, do not continue driving. Driving even a short distance can damage a tire beyond repair.

Any tires which are over 6 years old must be checked by a qualified technician even if damage is not obvious.

Tires deteriorate with age even if they have never or seldom been used.

This applies also to the spare tire and tires stored for future use.

REPLACING YOUR TIRES

When replacing a tire, use a tire of the same size and construction, and the same or greater maximum load as the originally installed tires. Also, on four–wheel drive models, all the tires must be the same brand and have the same tread patterns.

Using any other size or type of tire may seriously affect handling, ride, speedometer/odometer calibration, ground clearance, and clearance between the body and tires or snow chains.

Check that the maximum load of the replaced tire is greater than 1/2 of the Gross Axle Weight Ratings (GAWR) of either the front axle or the rear axle, whichever is greater. As for the maximum load of the tire, see the load limit at maximum cold tire inflation pressure mentioned on the sidewall of the tire, and as for the Gross Axle Weight Ratings (GAWR), see the Certification Label.

For details about the side wall of the tire and the Certification Label, see pages 321 and 324.

⚠ CAUTION

Observe the following instructions. Otherwise, an accident may occur resulting in death or serious injuries.

- **Do not mix radial, bias belted, or bias–ply tires on your vehicle, as this may cause dangerous handling characteristics resulting in loss of control.**
- **Do not use tires other than the manufacturer’s recommended size, as this may cause dangerous handling characteristics resulting in loss of control.**
- **Four–wheel drive models: Do not use tires of different brands, sizes, construction or tread patterns, as this may cause dangerous handling characteristics resulting in loss of control.**

Toyota recommends all four tires, or at least both of the front or rear tires be replaced at a time as a set.

See “If you have a flat tire” on page 361 in Section 4 for tire change procedure.

When a tire is replaced, the wheel should always be balanced.

An unbalanced wheel may affect vehicle handling and tire life. Wheels can get out of balance with regular use and should therefore be balanced occasionally.

When replacing a tubeless tire, the air valve should also be replaced with a new one.

Rotating tires

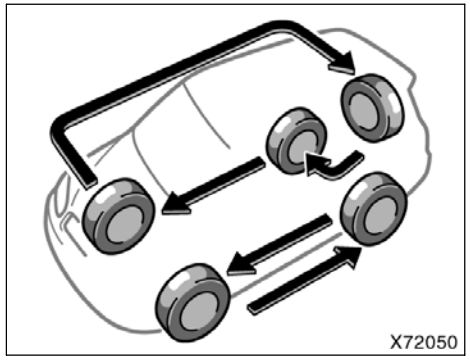

With a spare tire of the same wheel type as the installed tires

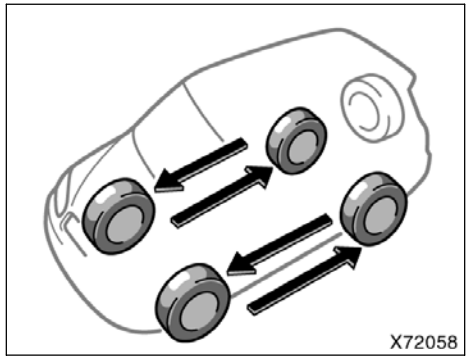

With a spare tire of different wheel type from the installed tires

To equalize tire wear and help extend tire life, Toyota recommends that you rotate your tires according to the maintenance schedule. (For scheduled maintenance information, please refer to the “Scheduled Maintenance Guide” or “Owner’s Manual Supplement”.) However, the most appropriate timing for tire rotation may vary according to your driving habits and road surface conditions.

See “If you have a flat tire” on page 361 in Section 4 for tire change procedure.

When rotating tires, check for uneven wear and damage. Abnormal wear is usually caused by incorrect tire pressure, improper wheel alignment, out–of–balance wheels, or severe braking.

Installing snow tires and chains

WHEN TO USE SNOW TIRES OR CHAINS

Snow tires or chains are recommended when driving on snow or ice.

On wet or dry roads, conventional tires provide better traction than snow tires.

SNOW TIRE SELECTION

If you need snow tires, select tires of the same size, construction and load capacity as the originally installed tires. Also, on four–wheel drive models, all the tires must be the same brand and have the same tread patterns.

Do not use tires other than those mentioned above. Do not install studded tires without first checking local regulations for possible restrictions.

⚠ CAUTION

Observe the following instructions. Otherwise, an accident may occur resulting in death or serious injuries.

- **Do not use snow tires other than the manufacturer’s recommended size, as this may cause dangerous handling characteristics resulting in loss of control.**

- **Four–wheel drive models:**
  Do not use snow tires of different brands, sizes, construction or tread patterns, as this may cause dangerous handling characteristics resulting in loss of control.

SNOW TIRE INSTALLATION

Snow tires should be installed on all wheels.

Installing snow tires on the front wheels only can lead to an excessive difference in road grip capability between the front and rear tires, which could cause loss of vehicle control.

When storing removed tires, you should store them in a cool dry place.

Mark the direction of rotation and be sure to install them in the same direction when replacing.

⚠ CAUTION

- **Do not drive with the snow tires incorrectly inflated.**
- **Never drive over 120 km/h (75 mph) with any type of snow tires.**

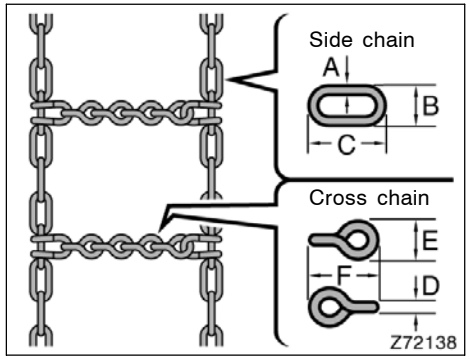

TIRE CHAIN SELECTION

Use the tire chains of correct size.

For 215/70R16, 225/65R17 and 235/55R18 tires, use the following type chains.

		mm (in.)
A	Diameter of side chain	3 (0.12)
B	Width of side chain	10 (0.39)
C	Length of side chain	30 (1.18)
D	Diameter of cross chain	4 (0.16)
E	Width of cross chain	14 (0.55)
F	Length of cross chain	25 (0.98)

Regulations regarding the use of tire chains vary according to location or type of road, so always check local regulations before installing chains.

NOTICE

If the wrong combination of tire and chain is used, the chains could damage the vehicle body.

CHAIN INSTALLATION

Install the chains on the front tires as tightly as possible. Do not use tire chains on the rear tires. Retighten chains after driving 0.5—1.0 km (1/4—1/2 mile).

When installing chains on your tires, carefully follow the instructions of the chain manufacturer.

If wheel covers are used, they will be scratched by the chain band, so remove the covers before putting on the chains.

CAUTION

- **Do not exceed 50 km/h (30 mph) or the chain manufacturer’s recommended speed limit, whichever is lower.**
- **Drive carefully avoiding bumps, holes, and sharp turns, which may cause the vehicle to bounce.**
- **Avoid sharp turns or locked–wheel braking, as use of chains may adversely affect vehicle handling.**
- **When driving with chains installed, be sure to drive carefully. Slow down before entering curves to avoid losing control of the vehicle. Otherwise an accident may occur.**

Replacing wheels

As you might have difficulty in identifying a flat or deflated tire, a tire pressure warning system is provided on this vehicle.

When replacing the wheels, be sure to install tire pressure warning valves and transmitters on the wheels. Consult your Toyota dealer about how to set up the tire pressure warning valves and transmitters.

CAUTION

- **Have the tires, wheels or tire pressure warning valves and transmitters replaced and ID codes registered by Toyota dealer. If you need tire pressure warning valves and transmitters, purchase from Toyota dealer.**
- **The tire pressure warning valve and transmitter nuts should always be tightened to a torque of 4 N·m (0.4 kgf·m, 2.9 ft·lbf).**
- **The use of non–genuine wheels may result in the system failure or air–leak.**

WHEN TO REPLACE YOUR WHEELS

If you have wheel damage such as bending, cracks or heavy corrosion, the wheel should be replaced.

If you fail to replace a damaged wheel, the tire may slip off the wheel or cause loss of handling control.

WHEEL SELECTION

When replacing wheels, care should be taken to ensure that the wheels are replaced by ones with the same load capacity, diameter, rim width, and offset.

Correct replacement wheels are available at your Toyota dealer.

A wheel of a different size or type may adversely affect handling, wheel and bearing life, brake cooling, speedometer/odometer calibration, stopping ability, headlight aim, bumper height, vehicle ground clearance, and tire or snow chain clearance to the body and chassis.

Replacement with used wheels is not recommended as they may have been subjected to rough treatment or high mileage and could fail without warning. Also, bent wheels which have been straightened may have structural damage and therefore should not be used. Never use an inner tube in a leaking wheel which is designed for a tubeless tire.

⚠ CAUTION

Observe the following instructions. Otherwise, an accident may occur resulting in death or serious injuries.

- **Do not use wheels other than the manufacturer’s recommended size, as this may cause dangerous handling characteristics resulting in loss of control.**
- **Four–wheel drive models:**
  Do not use wheels of different brands, sizes and types, as this may cause dangerous handling characteristics resulting in loss of control.

Aluminum wheel precautions

- When installing aluminum wheels, check that the wheel nuts are tight after driving your vehicle the first 1600 km (1000 miles).
- If you have rotated, repaired, or changed your tires, check that the wheel nuts are still tight after driving 1600 km (1000 miles).
- When using tire chains, be careful not to damage the aluminum wheels.
- Use only Toyota wheel nuts and wrench designed for your aluminum wheels.
- When balancing your wheels, use only Toyota balance weights or equivalent and a plastic or rubber hammer.
- As with any wheel, periodically check your aluminum wheels for damage. If damaged, replace immediately.

SECTION 7-3

DO-IT-YOURSELF MAINTENANCE

Electrical components

Checking battery condition 418
Battery recharging precautions 420
Checking and replacing fuses 420
Adding washer fluid 422
Replacing light bulbs 422

Checking battery condition——Precautions

⚠ CAUTION

BATTERY PRECAUTIONS

The battery produces flammable and explosive hydrogen gas.

- **Do not cause a spark from the battery with tools.**
- **Do not smoke or light a match near the battery.**

The electrolyte contains poisonous and corrosive sulfuric acid.

- **Avoid contact with eyes, skin or clothes.**
- **Never ingest electrolyte.**
- **Wear protective safety glasses when working near the battery.**
- **Keep children away from the battery.**

EMERGENCY MEASURES

- **If electrolyte gets in your eyes, flush your eyes with clean water immediately and get immediate medical attention. If possible, continue to apply water with a sponge or cloth while en route to the medical office.**
- **If electrolyte gets on your skin, thoroughly wash the contact area. If you feel pain or burning, get medical attention immediately.**
- **If electrolyte gets on your clothes, there is a possibility of its soaking through to your skin, so immediately take off the exposed clothing and follow the procedure above, if necessary.**
- **If you accidentally swallow electrolyte, drink a large quantity of water or milk. Follow with milk of magnesia, beaten raw egg or vegetable oil. Then go immediately for emergency help.**

—Checking battery exterior

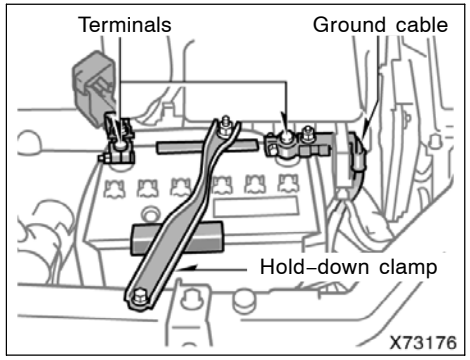

Check the battery for corroded or loose terminal connections, cracks, or loose hold–down clamp.

a. If the battery is corroded, wash it off with a solution of warm water and baking soda. Coat the outside of the terminals with grease to prevent further corrosion.

b. If the terminal connections are loose, tighten their clamp nuts—but do not overtighten.

c. Tighten the hold–down clamp only enough to keep the battery firmly in place. Overtightening may damage the battery case.

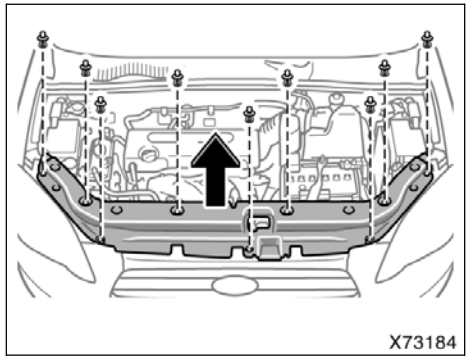

Before replacing the battery, remove the cover as shown.

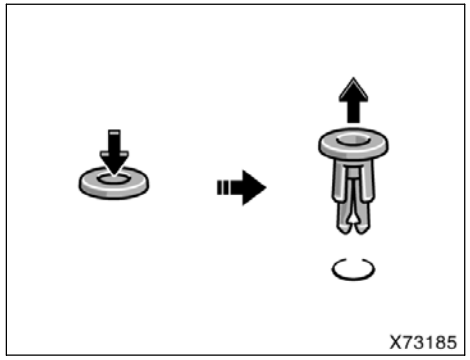

Removing clip

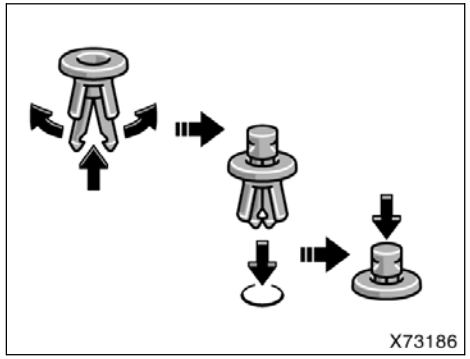

Installing clip

NOTICE

- ***Be sure the engine and all accessories are off before performing maintenance.***
- ***When checking the battery, remove the ground cable from the negative terminal (“–” mark) first and reinstall it last.***
- ***Be careful not to cause a short circuit with tools.***
- ***Take care no solution gets into the battery when washing it.***

If the battery is disconnected or run down, You should normalize the power window and moon roof may not operate correctly after you reconnect, replace or recharge the battery. In any of these cases, you should normalize each system. To normalize them, see “Power windows” on page 24 and “Electric moon roof” on page 30 in Section 1–2.

—Checking battery condition

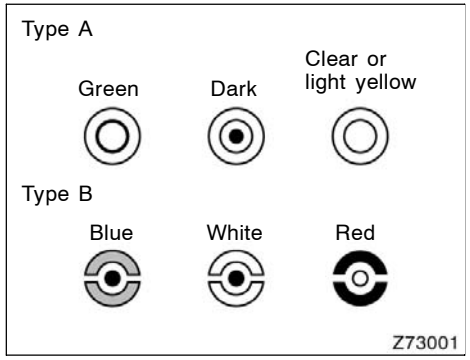

CHECKING BY INDICATOR

Check the battery condition by the indicator color.

Indicator color		Condition
Type A	Type B	
Green	Blue	Good
Dark	White	Charging necessary. Have battery checked by your Toyota dealer.
Clear or light yellow	Red	Have battery checked by your Toyota dealer.

Battery recharging precautions

During recharging, the battery is producing hydrogen gas.

Therefore, before recharging:

1. If recharging with the battery installed on the vehicle, be sure to disconnect the ground cable.
2. Be sure the power switch on the recharger is off when connecting the charger cables to the battery and when disconnecting them.

⚠ CAUTION

- **Always charge the battery in an unconfined area. Do not charge the battery in a garage or closed room where there is not sufficient ventilation.**
- **Only do a slow charge (5 A or less). Charging at a quicker rate is dangerous. The battery may explode, causing personal injuries.**

NOTICE

Never recharge the battery while the engine is running. Also, be sure all accessories are turned off.

Checking and replacing fuses

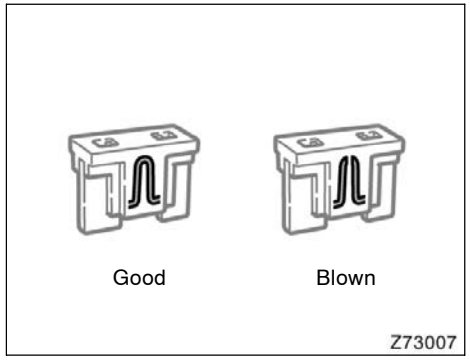

Type A

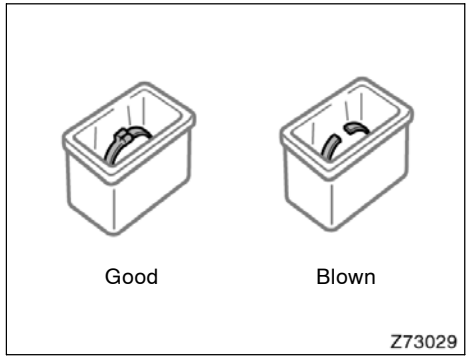

Type B

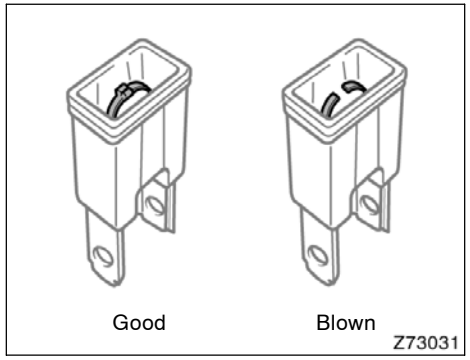

Type C

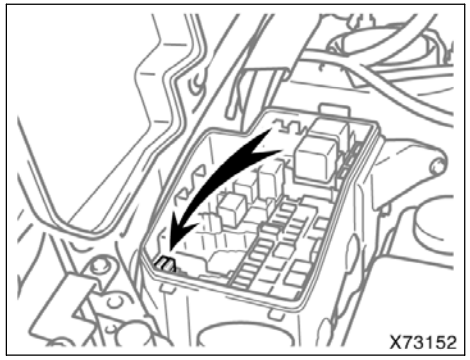

If the headlights or other electrical components do not work, check the fuses. If any of the fuses are blown, they must be replaced.

See “Fuse locations” on page 398 in Section 7–1 for locations of the fuses.

Turn the engine switch and inoperative component off. Pull the suspected fuse straight out and check it.

Determine which fuse may be causing the problem. The lid of the fuse box shows the name of the circuit for each fuse. See page 434 in Section 8 for the functions controlled by each circuit.

Type A fuses can be pulled out by using the pull–out tool. The location of the pull–out tool is shown in the illustration.

If you are not sure whether the fuse has blown, try replacing the suspected fuse with one that you know is good.

If the fuse has blown, push a new fuse into the clip.

Only install a fuse with the amperage rating designated on the fuse box lid.

If you do not have a spare fuse, in an emergency you can pull out the “RAD NO.1” or “CIG” fuse, which may be dispensable for normal driving, and use it if its amperage rating is the same.

If you cannot use one of the same amperage, use one that is lower, but as close to the rating as possible. If the amperage is lower than that specified, the fuse might blow out again but this does not indicate anything wrong. Be sure to get the correct fuse as soon as possible and return the substitute to its original clip.

It is a good idea to purchase a set of spare fuses and keep them in your vehicle for emergencies.

If the new fuse immediately blows out, there is a problem with the electrical system. Have your Toyota dealer correct it as soon as possible.

You should normalize the power window and moon roof may not operate correctly after replacing blown fuses. To normalize the power window and moon roof, see “Power windows” on page 24 and “Electric moon roof” on page 30 in Section 1–2.

CAUTION

Never use a fuse with a higher amperage rating, or any other object, in place of a fuse. This may cause extensive damage and possibly a fire.

Adding washer fluid

If any washer does not work or windshield washer fluid level warning light comes on, the washer tank may be empty. Add washer fluid.

You may use plain water as washer fluid. However, in cold areas where temperatures range below the freezing point, use washer fluid containing antifreeze. This product is available at your Toyota dealer and most auto parts stores. Follow the manufacturer’s directions for how much to mix with water.

NOTICE

Do not use engine antifreeze or any other substitute because it may damage your vehicle’s paint.

Replacing light bulbs—

The following illustrations show how to gain access to the bulbs. When replacing a bulb, make sure the engine switch and light switch are off. Use bulbs with the wattage ratings given in the table.

The stop/tail lights and high mounted stoplight consist of a number of LEDs. If any of the LEDs burn out, take your vehicle to your Toyota dealer to have the light replaced.

If two or more LEDs in a stop/tail light burn out, your vehicle may not conform to local laws (SAE).

CAUTION

- **To prevent burning yourself, do not replace the light bulbs while they are hot.**
- **Halogen bulbs have pressurized gas inside and require special handling. They can burst or shatter if scratched or dropped. Hold a bulb only by its plastic or metal case. Do not touch the glass part of a bulb with bare hands.**

NOTICE

Only use a bulb of the listed type.

The inside of the lens of exterior lights such as headlights may temporarily fog up when the lens becomes wet in the rain or in a car wash. This is not a problem because the fogging is caused by the temperature difference between the outside and inside of the lens, just like the windshield fogs up in the rain. However, if there is a large drop of water on the inside of the lens, or if there is water pooled inside the light, contact your Toyota dealer.

Light bulbs	Bulb No.	W	Type
Headlights (high)	9005	60	A
Headlights (low)	9006	51	B
Front turn signal, parking and front side marker lights	7443	21/5	C
Front fog lights	—	55	D
Rear turn signal lights	7440	21	E
Back–up lights	921	16	C
Rear side marker lights	—	5	C
License plate light	168	5	C
Interior light	—	8	F
Front personal lights	—	8	C
Vanity lights	—	8	C
Luggage compartment light	—	5	E

A: HB3 halogen bulbs
B: HB4 halogen bulbs
C: Wedge base bulbs (clear)
D: H11 halogen bulbs
E: Wedge base bulbs (amber)
F: Double end bulbs

—Headlights

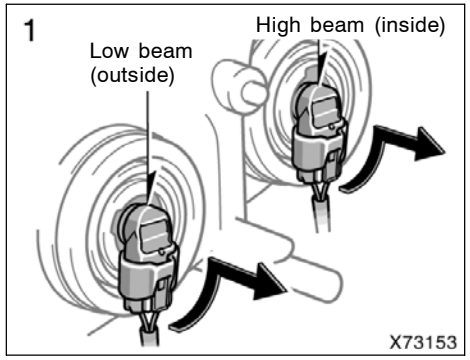

1. Open the hood. Turn the bulb base counterclockwise to the front of the vehicle as shown.

The above illustration shows the left–hand headlight.

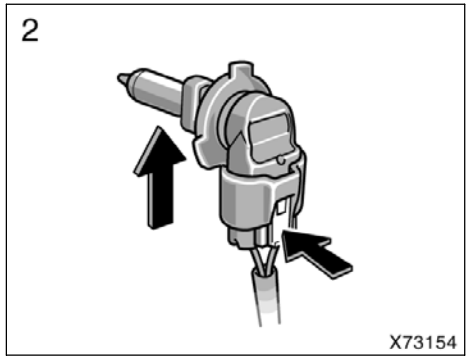

2. Unplug the connector while depressing the lock release.

If the connector is tight, wiggle it.

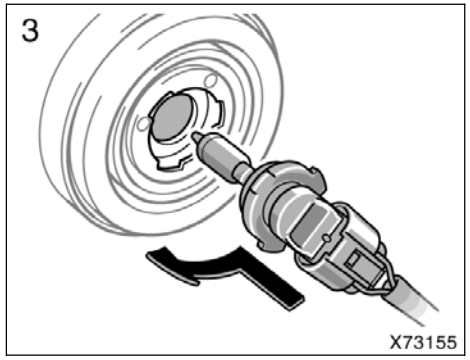

3. Plug in a new bulb into the connector and install it into the mounting hole.

Aiming is not necessary after replacing the bulb. When aiming adjustment is necessary, contact your Toyota dealer.

—Front turn signal, parking and front side marker lights

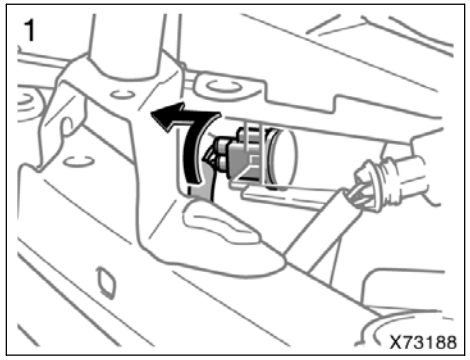

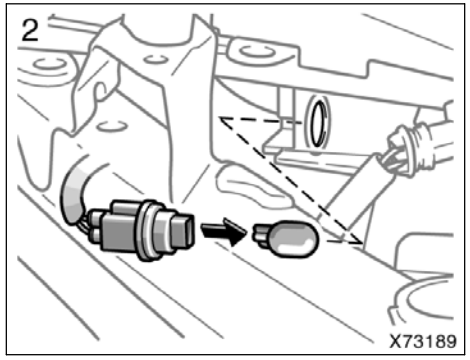

—Front fog lights

If either the left or right front fog light burns out, contact your Toyota dealer.

NOTICE
Do not try to replace the front fog light bulbs by yourself. You may damage the vehicle.

—Rear turn signal, rear side marker and back–up lights

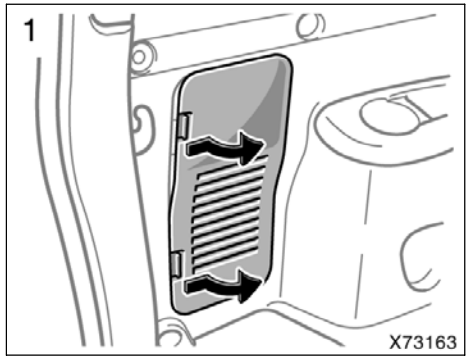

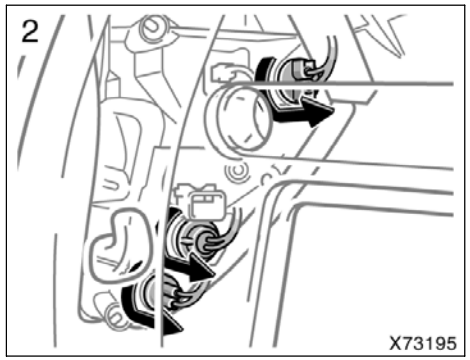

—License plate light

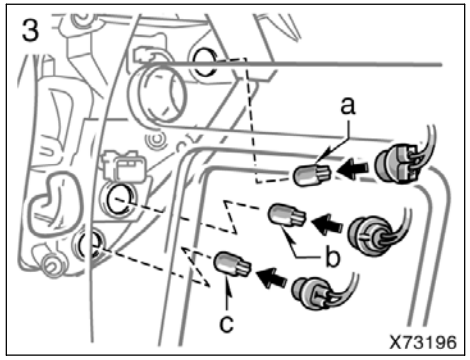

a: Rear side marker light
b: Rear turn signal light
c: Back–up light

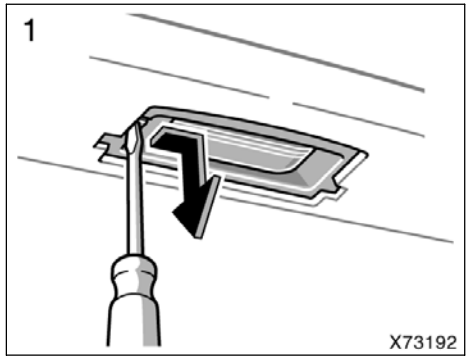

Use a flathead screwdriver.

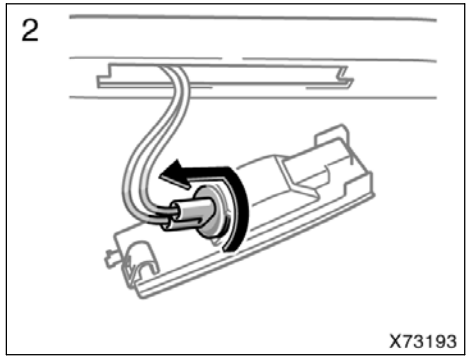

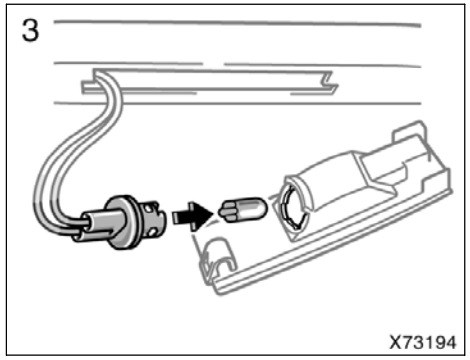

SECTION 8

SPECIFICATIONS

Specifications

Dimensions and weights 428
Engine 429
Fuel 429
Service specifications 429
Tires 433
Fuses 434

Dimensions and weights

Overall length	mm (in.)	4570 (179.9)*1 4575 (180.1)*2 4580 (180.3)*3 4600 (181.1)*4
Overall width	mm (in.)	1815 (71.5) 1855 (73.0)*5
Overall height*6	mm (in.)	1685 (66.3) 1690 (66.5)*7 1745 (68.7)*8 1755 (69.1)*7, 8
Wheelbase	mm (in.)	2660 (104.7)
Front tread	mm (in.)	1560 (61.4)
Rear tread	mm (in.)	1560 (61.4)
Vehicle capacity weight (occupants + luggage)	kg (lb.)	375 (825) 525 (1155)*7
Towing capacity (trailer weight + cargo weight)	kg (lb.)	680 (1500)*9 907 (2000)*10, 11 1588 (3500)*10, 12

*1: 215/70R16 tires
*2: 225/65R17 tires
*3: 235/55R18 tires
*4: With spare tire cover
*5: With over fender
*6: Unladen vehicle
*7: With third seat
*8: With roof rails
*9: 2.4 L 4–cylinder (2AZ–FE) engine
*10: 3.5 L V6 (2GR–FE) engine
*11: Without towing package
*12: With towing package

Engine

Model:
2AZ–FE and 2GR–FE

Type:
2AZ–FE engine
4 cylinder in line, 4 cycle, gasoline
2GR–FE engine
6 cylinder V type, 4 cycle, gasoline

Bore and stroke, mm (in.):
2AZ–FE engine
88.5 × 96.0 (3.48 × 3.78)
2GR–FE engine
94.0 × 83.0 (3.70 × 3.27)

Displacement, cm^3 (cu. in.):

2AZ–FE engine	2362 (144.1)
2GR–FE engine	3456 (210.9)

Fuel

Fuel type:
Unleaded gasoline, Octane Rating 87 (Research Octane Number 91) or higher

Fuel tank capacity, L (gal., Imp. gal.):
60 (15.9, 13.2)

Service specifications

ENGINE

Valve clearance (engine cold), mm (in.):
2.4 L 4–cylinder (2AZ–FE) engine only

Intake	0.19—0.29 (0.007—0.011)
Exhaust	0.38—0.48 (0.015—0.019)

Spark plug type:
2.4 L 4–cylinder (2AZ–FE) engine

DENSO	SK20R11
NGK	IFR6A11

3.5 L V6 (2GR–FE) engine

DENSO	FK20HR11

Spark plug gap, mm (in.):
1.1 (0.043)

NOTICE

3.5 L V6 (2GR–FE) engine—Use only above spark plugs. Do not adjust gaps for engine performance or smooth driveability.

ENGINE LUBRICATION

Oil capacity (drain and refill),
L (qt., Imp. qt.):

2.4 L 4–cylinder (2AZ–FE) engine	
With filter	4.3 (4.5, 3.8)
Without filter	4.1 (4.3, 3.6)
3.5 L V6 (2GR–FE) engine	
With filter	6.1 (6.4, 5.4)
Without filter	5.7 (6.0, 5.0)

“Toyota Genuine Motor Oil” is used in your Toyota vehicle. Use Toyota approved “Toyota Genuine Motor Oil” or equivalent to satisfy the following grade and viscosity.

Oil grade:
ILSAC multigrade engine oil

Recommended oil viscosity:

2.4 L 4–cylinder (2AZ–FE) engine
SAE 5W–20 or 0W–20

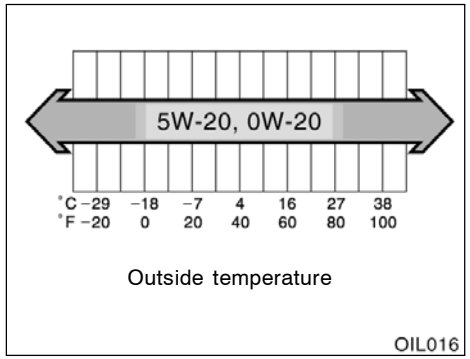

3.5 L V6 (2GR–FE) engine
SAE 5W–30

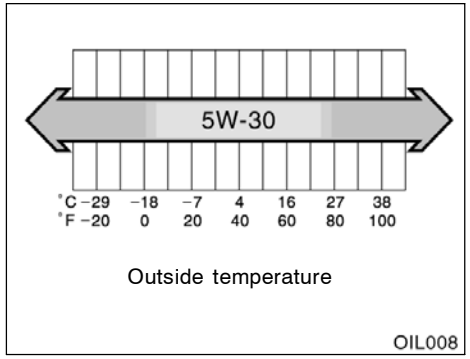

Please contact your Toyota dealer for further details.

COOLING SYSTEM

Total capacity, L(qt., Imp. qt.):
2.4 L 4–cylinder (2AZ–FE) engine
6.8 (7.2, 6.0)
3.5 L V6 (2GR–FE) engine
Without towing package
8.9 (9.4, 7.8)
With towing package
9.3 (9.8, 8.2)

Coolant type:

“Toyota Super Long Life Coolant” is used in your Toyota vehicle at factory fill. In order to avoid technical problems, only use “Toyota Super Long Life Coolant” or similar high quality ethylene glycol based non–silicate, non–amine, non–nitrite, and non–borate coolant with long–life hybrid organic acid technology. (Coolant with long–life hybrid organic acid technology consists of the combination of low phosphates and organic acids.)

Do not use plain water alone.

Please contact your Toyota dealer for further details.

BATTERY

Open voltage* at 20°C (68°F):

12.6—12.8 V	Fully charged
12.2—12.4 V	Half charged
11.8—12.0 V	Discharged

*: Voltage that is checked 20 minutes after the key is removed with all the lights turned off

Charging rates:
5 A max.

AUTOMATIC TRANSAXLE

Fluid capacity (drain and refill), L (qt., Imp. qt.):
Up to 3.5 (3.7, 3.1)

Fluid type:
Toyota Genuine ATF WS

Change automatic transmission fluid only as necessary.

Generally, it is necessary to change automatic transmission fluid only if your vehicle is driven under one of the Special Operating Conditions listed in your “Scheduled Maintenance Guide” or “Owner’s Manual Supplement”. When changing the automatic transmission fluid, use only “Toyota Genuine ATF WS” (ATF JWS3324 or NWS9638) to aid in assuring optimum transaxle performance.

Notice: Using automatic transmission fluid other than “Toyota Genuine ATF WS” may cause deterioration in shift quality, locking up of your transmission accompanied by vibration, and ultimately damage the automatic transmission of your vehicle.

Please contact your Toyota dealer for further details.

TRANSFER
(four–wheel drive models)

Oil capacity, L (qt., Imp. qt.):
0.45 (0.48 0.40)

Oil type:
Hypoid gear oil API GL–5

Recommended oil viscosity:
Above –18°C (0°F)
SAE 85W–90
Below –18°C (0°F)
SAE 80W–90

REAR DIFFERENTIAL
(four–wheel drive models)

Oil capacity, L (qt., Imp. qt.):
0.5 (0.5, 0.4)

Oil type:
Hypoid gear oil API GL–5

Recommended oil viscosity:
Above –18°C (0°F)
SAE 90
Below –18°C (0°F)
SAE 80W or 80W–90

BRAKES

Minimum pedal clearance when depressed with a force of 490 N (50 kgf, 110 lbf) with the engine running, mm (in.):

2.4 L 4–cylinder (2AZ–FE) engine	
Without third seat	95 (3.7)
With third seat	120 (4.7)
3.5 L V6 (2GR–FE) engine	120 (4.7)

Pedal free play, mm (in.):
1—6 (0.04—0.24)

Pad wear limit, mm (in.):
1.0 (0.04)

Parking brake adjustment when pulled with the force of 200 N (21 kgf, 45 lbf):
6—8 clicks

Fluid type:
SAE J1703 or FMVSS No.116 DOT 3

STEERING

Wheel free play:
Less than 30 mm (1.2 in.)

Tires

Tire size, cold tire inflation pressure and wheel size:

Tire size	Cold tire inflation pressure kPa (kgf/cm^2 or bar, psi)			Wheel size
	Front	Rear	Spare	
215/70R16 99H	220 (2.2, 32)	220 (2.2, 32)	220 (2.2, 32)	16 × 6 1/2J
225/65R17 101H	220 (2.2, 32)	220 (2.2, 32)	220 (2.2, 32)	17 × 6 1/2J*1 17 × 7J*2
235/55R18 99H	220 (2.2, 32)	220 (2.2, 32)	220 (2.2, 32)	18 × 7 1/2J

*1: Steel wheels
*2: Aluminum wheels

Wheel nut torque, N·m (kgf·m, ft·lbf):
103 (10.5, 76)

NOTE: For a complete information on tires (e.g. replacing tires or replacing wheels), see “Checking tire inflation pressure” through “Aluminum wheel precautions”, pages 408 through 416 in Section 7–2.

Fuses

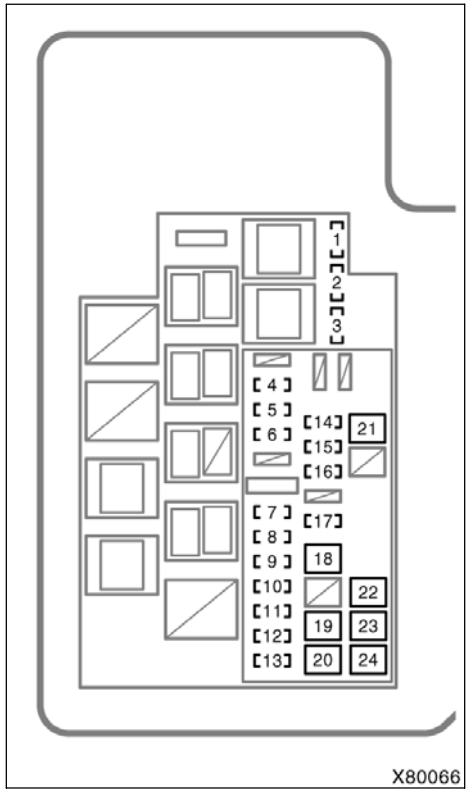

ENGINE COMPARTMENT (No.1)

1. **SPARE 30 A:** Spare fuse
2. **SPARE 20 A:** Spare fuse
3. **SPARE 10 A:** Spare fuse
4. **ECU–B2 7.5 A:** Air conditioning system, power windows
5. **RSE 7.5 A:** Rear seat entertainment system
6. **STR LOCK 20 A:** No circuit
7. **RAD NO.1 20 A:** Audio system
8. **ECU–B 10 A:** Wireless remote control system, electric power steering system, main body ECU, power door lock, front passenger occupant classification system, clock, audio system, meters and gauges
9. **DOME 10 A:** Engine switch light, interior light, vanity lights, luggage compartment light, front personal lights, foot lights
10. **HEAD LH 10 A:** Left–hand headlight (high beam)
11. **HEAD RH 10 A:** Right–hand headlight (high beam)
12. **HEAD LL 10 A:** Left–hand headlight (low beam)
13. **HEAD RL 10 A:** Right–hand headlight (low beam)
14. **AC INV 15 A:** AC inverter
15. **TOWING 30 A:** No circuit
16. **STV HTR 25 A:** No circuit
17. **DEICER 20 A:** Windshield wiper de–icer
18. **HTR 50 A:** Air conditioning system
19. **PTC2 50 A:** No circuit
20. **PTC1 50 A:** No circuit
21. **HEAD MAIN 50 A:** “HEAD LL”, “HEAD RL”, “HEAD LH”, “HEAD RH” fuses
22. **RDI 30 A (without towing package) or FAN2 50 A (with towing package):** Electric cooling fan
23. **CDS 30 A (without towing package) or FAN1 50 A (with towing package):** Electric cooling fan
24. **H–LP CLN 30 A:** No circuit

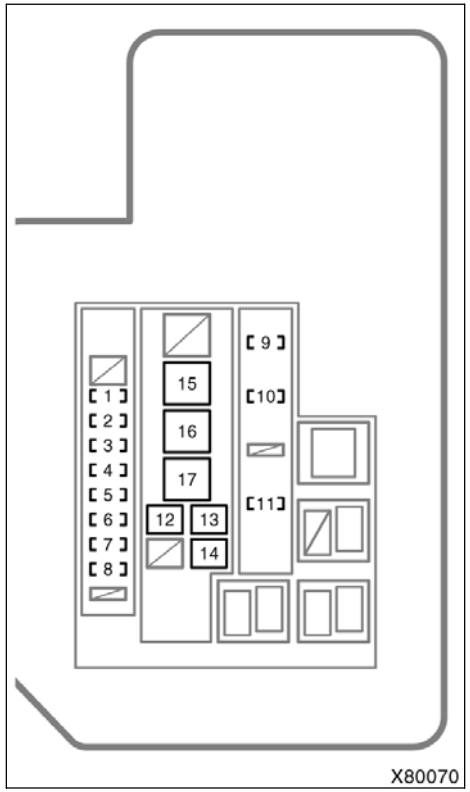

ENGINE COMPARTMENT (No.2)

1. **AMP 30 A:** Audio system
2. **AM2 30 A:** Starting system
3. **IG2 15 A:** Starting system, multiport fuel injection system/sequential multiport fuel injection system
4. **HAZ 10 A:** Emergency flashers
5. **ETCS 10 A:** Multiport fuel injection system/sequential multiport fuel injection system
6. **AM2–2 7.5 A:** No circuit
7. **EFI NO.1 10 A:** Multiport fuel injection system/sequential multiport fuel injection system
8. **EFI NO.2 10 A:** Multiport fuel injection system/sequential multiport fuel injection system
9. **EFI MAIN 20 A:** Multiport fuel injection system/sequential multiport fuel injection system, “EFI NO.1”, “EFI NO.2” fuses
10. **HORN 10 A:** Horn
11. **A/F 20 A (3.5 L V6 [2GR–FE] engine only):** A/F sensor
12. **P/I 50 A:** “EFI MAIN”, “HORN”, “A/F” fuses
13. **ABS2 30 A:** Anti–lock brake system, traction control system, enhanced vehicle stability control system, “AUTO LSD” system, downhill assist control system, hill–start assist control system
14. **ABS1 50 A:** Anti–lock brake system, traction control system, enhanced vehicle stability control system, “AUTO LSD” system, downhill assist control system, hill–start assist control system
15. **EMPS 60 A:** Electric power steering system
16. **MAIN 80 A:** “HEAD MAIN”, “ECU–B2”, “RSE” fuses
17. **ALT 120 A (without towing package) or 140 A (with towing package):** “ABS 1”, “ABS 2”, “RDI”, “CDS”, “FAN1”, “FAN2”, “AC INV”, “TOWING”, “HTR”, “DEICER” fuses

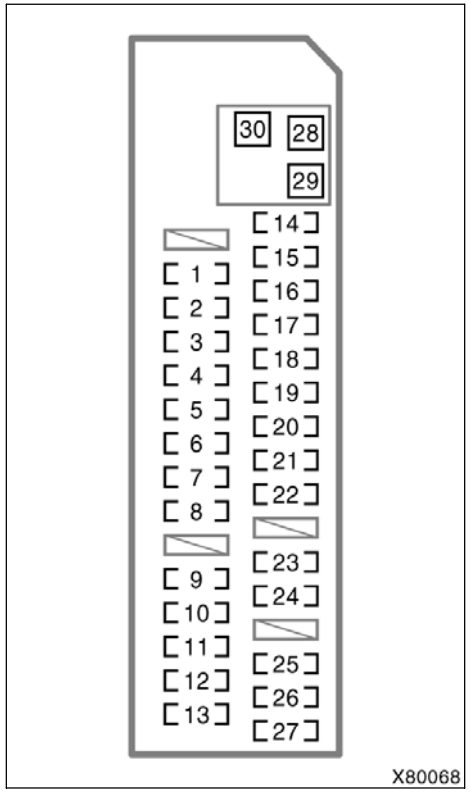

INSTRUMENT PANEL

1. **S–HTR 15 A:** Seat heaters
2. **WIP 25 A:** Windshield wipers
3. **RR WIP 15 A:** Rear window wiper
4. **WSH 15 A:** Windshield washer, rear window washer
5. **ECU–IG1 10 A:** Electric cooling fan, anti–lock brake system, traction control system, enhanced vehicle stability control system, “AUTO LSD” system, downhill assist control system, hill–start assist control system, active torque control 4WD system, tire pressure monitor system, automatic transmission shift lock system, air conditioning system, main body ECU, electric moon roof, stop/tail lights, windshield wiper de–icer, electric power steering system, clock, AC inverter
6. **ECU–IG2 10 A:** Air conditioning system, rear window defogger
7. **OBD 7.5 A:** On–board diagnosis system
8. **STOP 10 A:** Stop/tail lights, high mounted stoplight, automatic transmission shift lock system, multiport fuel injection system/sequential multiport fuel injection system, anti–lock brake system, traction control system, enhanced vehicle stability control system, “AUTO LSD” system, downhill assist control system, hill–start assist control system
9. **DOOR 25 A:** Main body ECU, power door lock system
10. **ACC–B 25 A:** “ACC”, “CIG” fuses
11. **4WD 7.5 A:** Active torque control 4WD system
12. **FR FOG 15 A:** Front fog lights
13. **AM1 7.5 A:** Starting system
14. **TAIL 10 A:** Tail lights, parking lights, license plate light, front fog lights, rear side marker lights
15. **PANEL 7.5 A:** Clock, instrument panel lights, audio system
16. **GAUGE1 10 A:** Buck–up lights, charging system
17. **D FR DOOR 20 A:** Power window (front doors)
18. **RL DOOR 20 A:** Power window (rear left door)

19. **RR DOOR 20 A:** Power window (rear right door)
20. **S/ROOF 25 A:** Electric moon roof
21. **CIG 15 A:** No circuit
22. **ACC 7.5 A:** Audio system, power outlets, power rear view mirror control, automatic transmission shift lock system, main body ECU, clock, rear seat entertainment system
23. **MIR HTR 10 A:** Outside rear view mirror heaters
24. **PWR OUTLET 15 A:** Power outlets
25. **RR FOG 10 A:** No circuit
26. **IGN 7.5 A:** SRS airbag system, multiport fuel injection system/sequential multiport fuel injection system, front passenger occupant classification system, starting system
27. **GAUGE2 7.5 A:** Meters and gauges
28. **DEF 30 A:** Rear window defogger, “MIR HTR” fuse
29. **P/SEAT 30 A:** Power seat
30. **POWER 30 A:** Power windows

SECTION 9

FOR OWNERS

For owners

Reporting safety defects for U.S. owners 440
Seat belt instructions for Canadian owners (in French) 440

Reporting safety defects for U.S. owners

If you believe that your vehicle has a defect which could cause a crash or could cause injury or death, you should immediately inform the National Highway Traffic Safety Administration (NHTSA) in addition to notifying Toyota Motor Sales, U.S.A., Inc.
(Toll–free: 1–800–331–4331).

If NHTSA receives similar complaints, it may open an investigation, and if it finds that a safety defect exists in a group of vehicles, it may order a recall and remedy campaign. However, NHTSA cannot become involved in individual problems between you, your dealer, or Toyota Motor Sales, U.S.A., Inc.

To contact NHTSA, you may call the Vehicle Safety Hotline toll–free at 1–888–327–4236 (TTY: 1–800–424–9153); go to *http://www.safercar.gov*; or write to: Administrator, NHTSA, 1200 New Jersey Ave, S.E., Washington, DC 20590. You can also obtain other information about motor vehicle safety from *http://www.safercar.gov*.

Seat belt instructions for Canadian owners (in French)—

The following is a French explanation of seat belt instructions extracted from the seat belt section in this manual.

See the seat belt section for more detailed seat belt instructions in English.

—Précautions concernant les ceintures de sécurité

⚠ ATTENTION

- **Vérifiez périodiquement le dispositif des ceintures de sécurité. Vérifiez l'absence de coupures, d'élimage ou de pièces desserrées. Les pièces détériorées doivent être remplacées. Ne démontez pas ni ne modifiez le dispositif.**
- **Maintenez les ceintures en bon état de propreté. Pour les nettoyer, utilisez une solution d'eau et de savon doux ou de l'eau tiède. N'utilisez jamais de détergents, de teintures ou d'agents abrasifs, ou ne les appliquez pas sur les ceintures—ces produits pourraient considérablement affaiblir les ceintures.**

—Utilisation des ceintures de sécurité avant et arrière

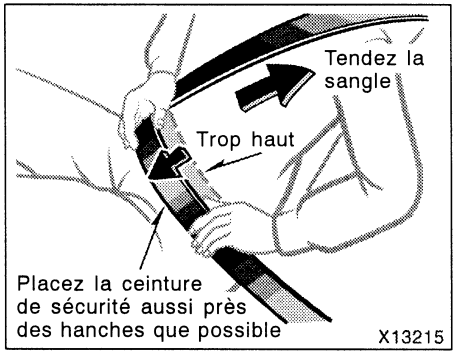

Réglez la position des sangles abdominale et diagonale.

Placez la sangle abdominale aussi bas que possible sur les hanches—non autour de la taille, puis réglez-la de façon serrée en tirant vers le haut la partie de la sangle diagonale qui passe à travers l'attache.

⚠ ATTENTION

- **A la fois réglée trop haut et mal ajustée, la ceinture abdominale peut blesser grièvement, voire même mortellement, par effet de sous-marinage (le corps glisse sous la ceinture) lors d'une collision ou de toute situation d'urgence. Veillez à ce que la sangle abdominale soit toujours positionnée le plus bas possible sur les hanches.**
- **Ne passez pas la sangle diagonale sous votre bras.**

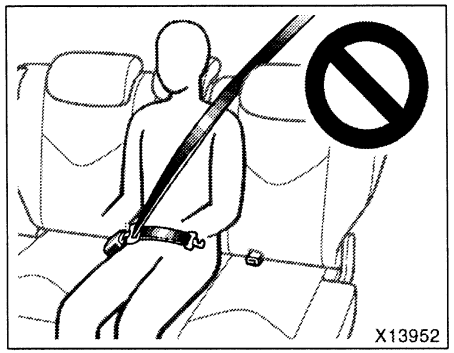

⚠ ATTENTION

N’utilisez pas la ceinture de sécurité du siège central arrière/de deuxième rangée si l’une des 2 boucles est déverrouillée. Le verrouillage seul de la sangle diagonale ou de la sangle abdominale pourrait entraîner des blessures graves voire mortelles en cas de freinage brusque ou de collision.

¿U –1

Quick index

- If a service reminder indicator or warning buzzer comes on 129
- If your vehicle will not start 356
- If your engine stalls while driving 359
- If your vehicle overheats 360
- If you have a flat tire 361
- If your vehicle needs to be towed 373
- Tips for driving during break–in period 309
- How to start the engine 342
- General maintenance 391
- Complete index ..... NO TAG

Gas station information

Fuel type:
UNLEADED gasoline, Octane Rating 87 (Research Octane Number 91) or higher

See page 309 for detailed information.

Fuel tank capacity:
60 L (15.9 gal., 13.2 Imp. gal.)

Engine oil:
ILSAC multigrade engine oil is recommended.

See page 405 for detailed information.

Tire information: See pages 408 through 416.

Tire inflation pressure: See page 433.

Publication No. OM42726U
Part No. 01999-42726
Printed in Japan 01–0802–00 I
¿¿¿ (¿¿U)

You should know as much about the quality and importance of proper maintenance of your new vehicle as the people who built it.

The Toyota authorized Repair Manual tells you how to maintain your vehicle and enables you to correctly perform your own maintenance.

The best way to keep your new vehicle in top running order is to maintain it properly from the moment you drive it off the showroom floor.
The Toyota authorized Repair Manual is packed with literally everything you need to know to perform your own maintenance in virtually every area of your new vehicle.

Maintenance procedures for the engine, chassis, body, electrical system, and more, are clearly explained and illustrated.

Periodic maintenance and tune–up

Periodic maintenance and tune–up helps to prevent small problems from growing into larger ones later on. The repair manual outlines exactly what maintenance is required and clearly explains how to do the work yourself step–by–step.
Areas covered include such things as spark plug replacement, valve clearance adjustment and engine oil and filter replacement.

Where to obtain the Repair Manual

The repair manual for RAV4 may be purchased from any Toyota dealer or the Material Distribution Center. To purchase the repair manual, please contact your Toyota dealer or call the Material Distribution Center toll–free at 1–800–622–2033.