NAVIGATION SYSTEM

PRECAUTION

NOTICE:
When disconnecting the cable from the negative (-) battery terminal, initialize the following systems after the cable is reconnected.

System Name	See procedure
Power Window Control System	IN-32

PARTS LOCATION

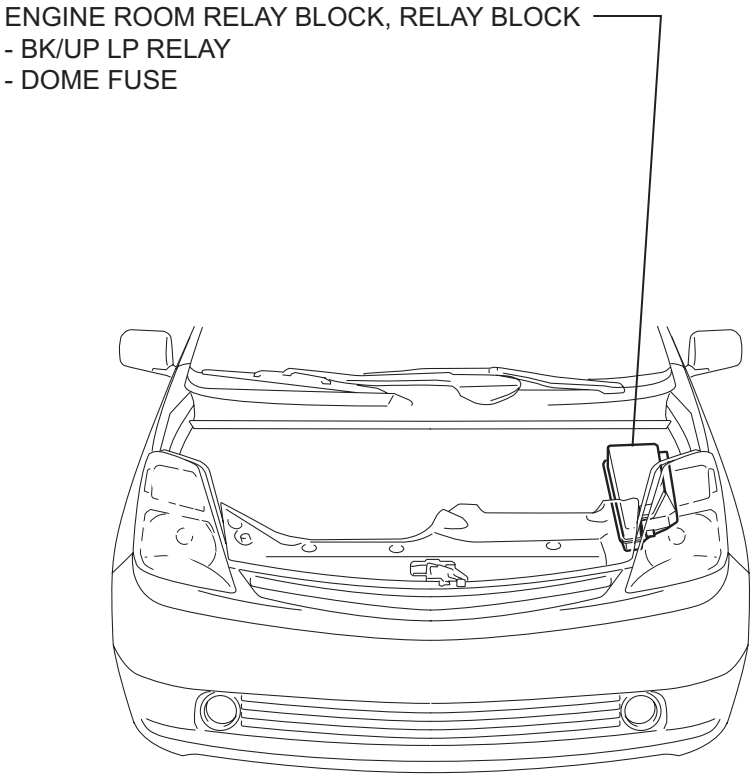

Y

B128129E03

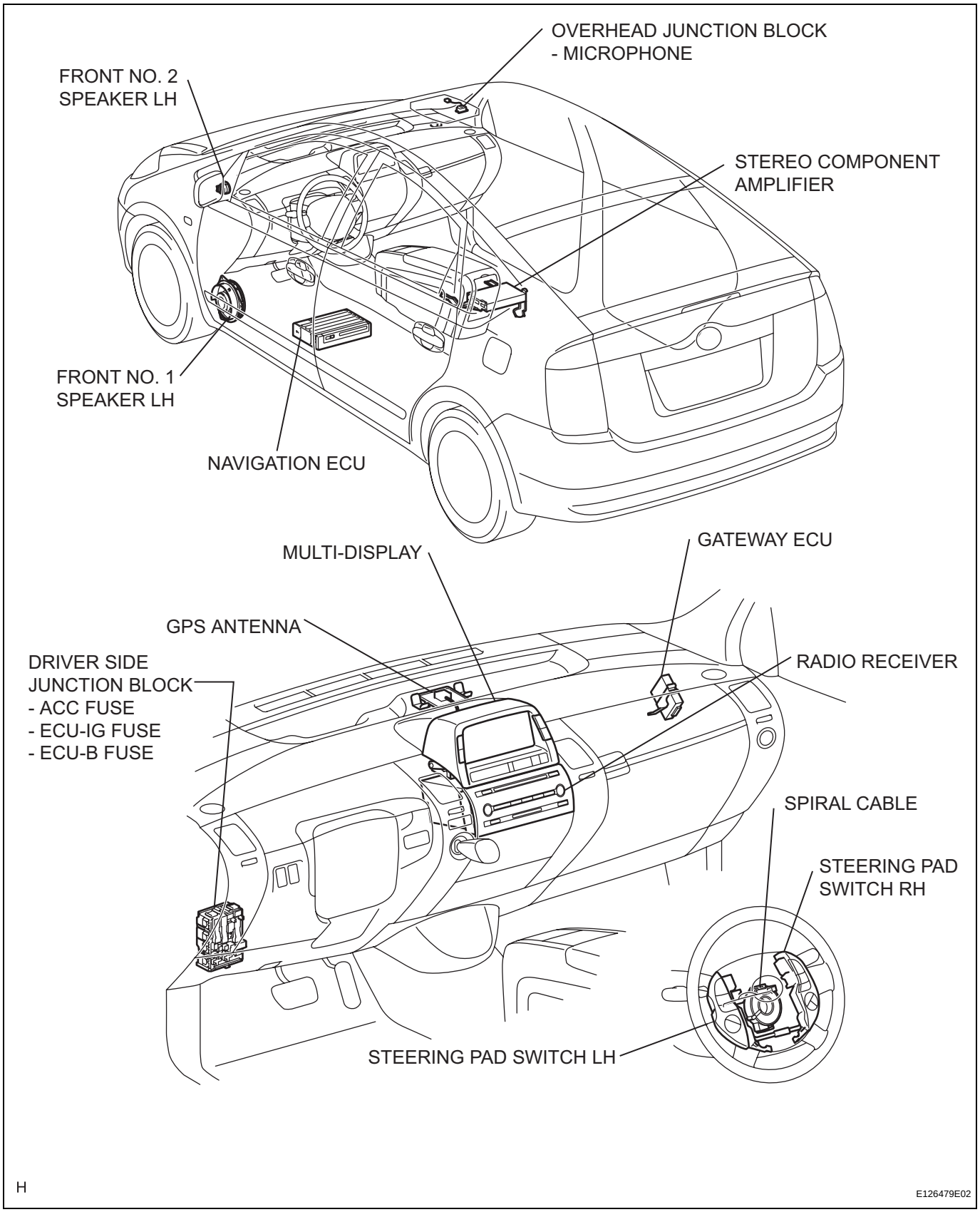
OVERHEAD JUNCTION BLOCK
- MICROPHONE
FRONT NO. 2
SPEAKER LH
STEREO COMPONENT
AMPLIFIER
FRONT NO. 1
SPEAKER LH
NAVIGATION ECU
MULTI-DISPLAY
GATEWAY ECU
GPS ANTENNA
DRIVER SIDE
JUNCTION BLOCK
- ACC FUSE
- ECU-IG FUSE
- ECU-B FUSE
RADIO RECEIVER
SPIRAL CABLE
STEERING PAD
SWITCH RH
STEERING PAD SWITCH LH
H
E126479E02

SYSTEM DIAGRAM

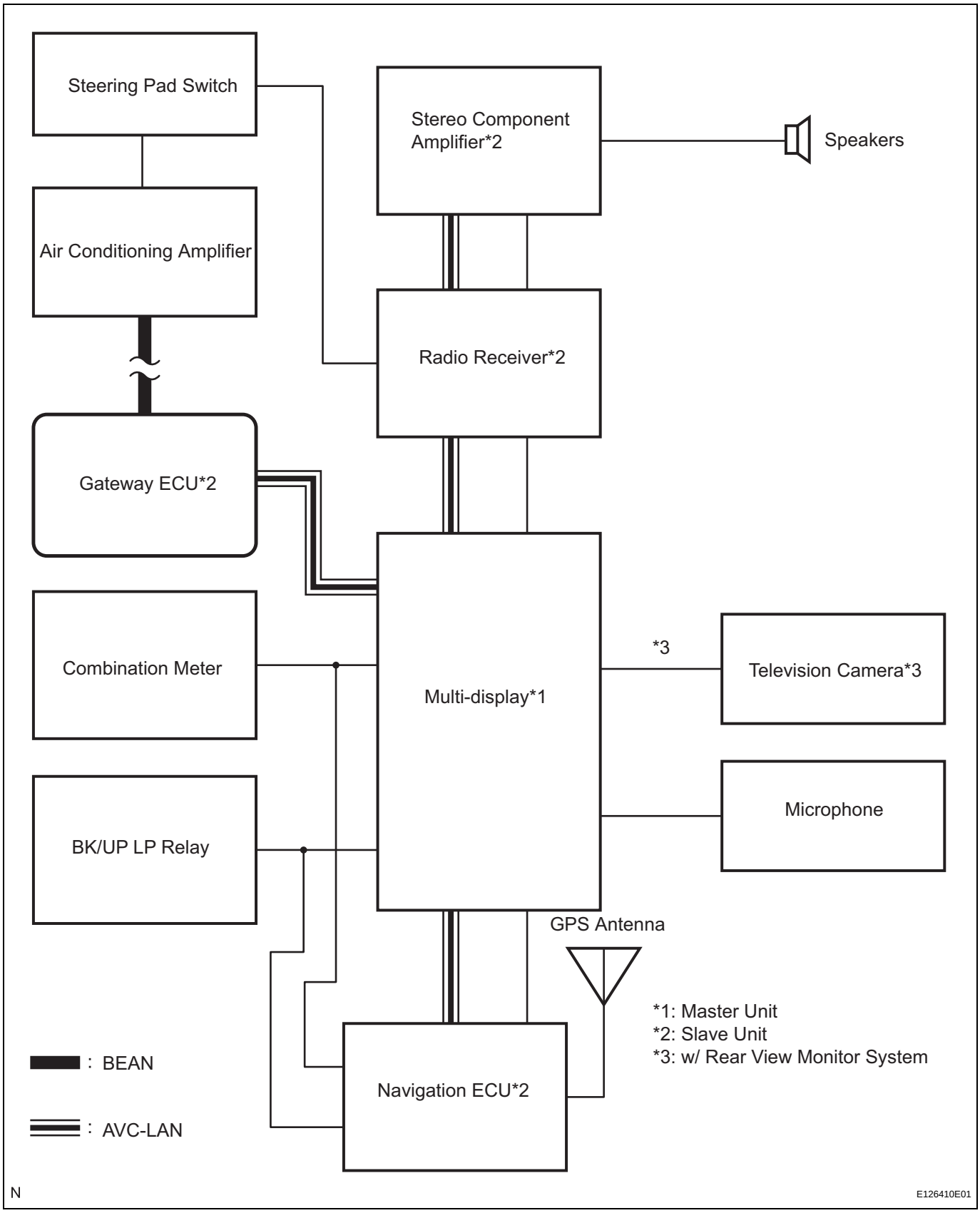

SYSTEM DESCRIPTION

1. NAVIGATION SYSTEM OUTLINE

(a) Vehicle position tracking methods

(1) It is essential that the navigation system correctly tracks the current vehicle position and displays it on the map. There are 2 methods to track the current vehicle position: autonomous (dead reckoning) and GPS* (satellite) navigation. Both navigation methods are used in conjunction with each other.
HINT:
*: GPS (Global Positioning System)

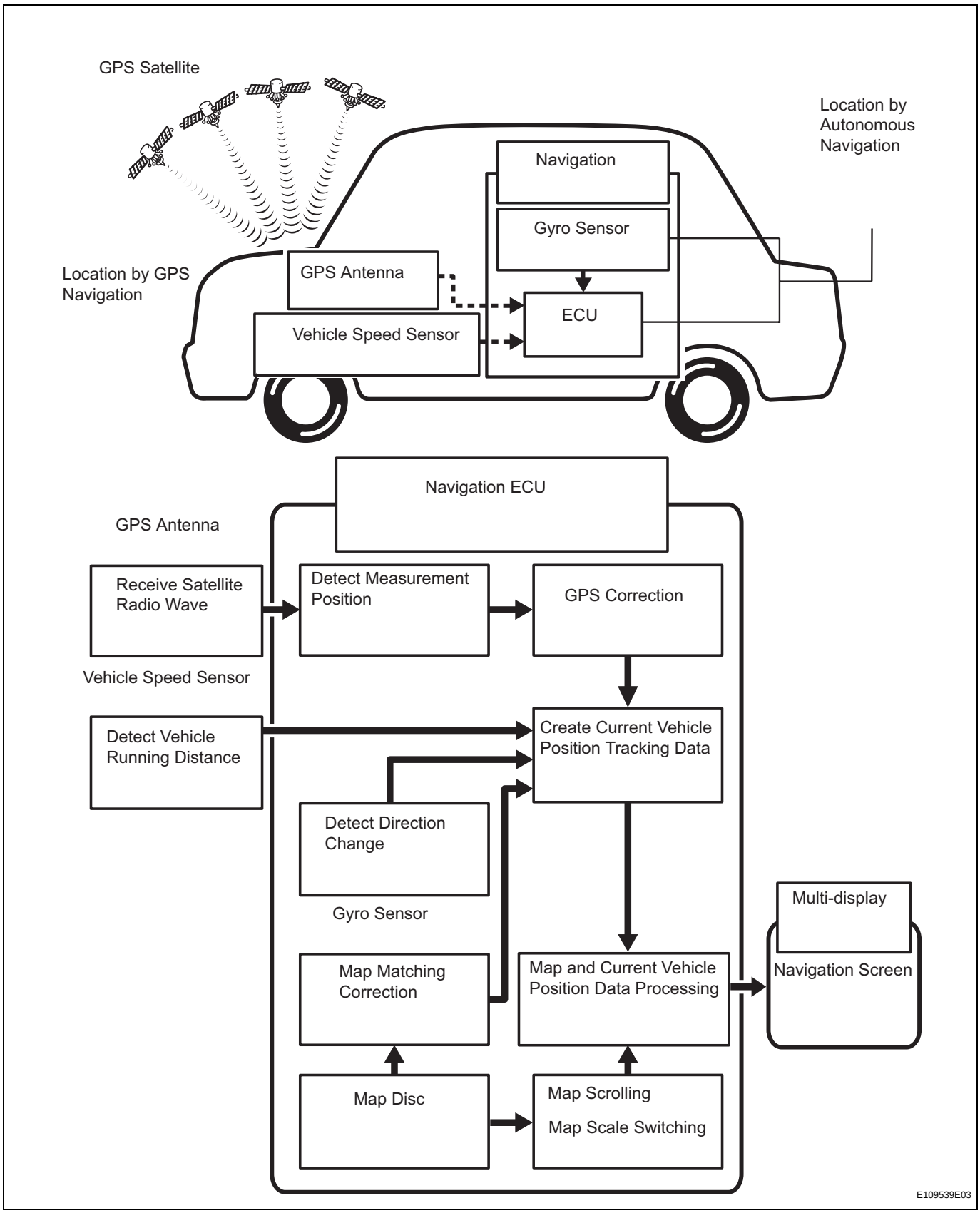

Operation	Description
Vehicle Position Calculation	Navigation ECU calculates current vehicle position (direction and current position) using direction deviation signal from gyro sensor and running distance signal from vehicle speed sensor, and creates driving route.

NS

Operation	Description
Map Display Processing	Navigation ECU processing vehicle position data, vehicle running track, and map data from map disc.
Map Matching	Map data from the map disc is compared to vehicle position and running track data. Then, vehicle position is matched with nearest road.
GPS Correction	Vehicle position is matched to position measured by GPS. Then, measurement position data from GPS unit is compared with vehicle position and running track data. If the position is very different, GPS measurement position is used.
Distance Correction	Running distance signal from vehicle speed sensor includes error caused by tire wear and slippage between tires and road surface. Distance correction is performed to account for this. Navigation ECU automatically offsets the running distance signal to make up for difference between it and distance data of map. Offset is automatically updated.

HINT:
The combination of autonomous and GPS navigation makes it possible to display the vehicle position even when the vehicle is in places where the GPS radio wave cannot receive a signal. When only autonomous navigation is used, however, the mapping accuracy may slightly decline.

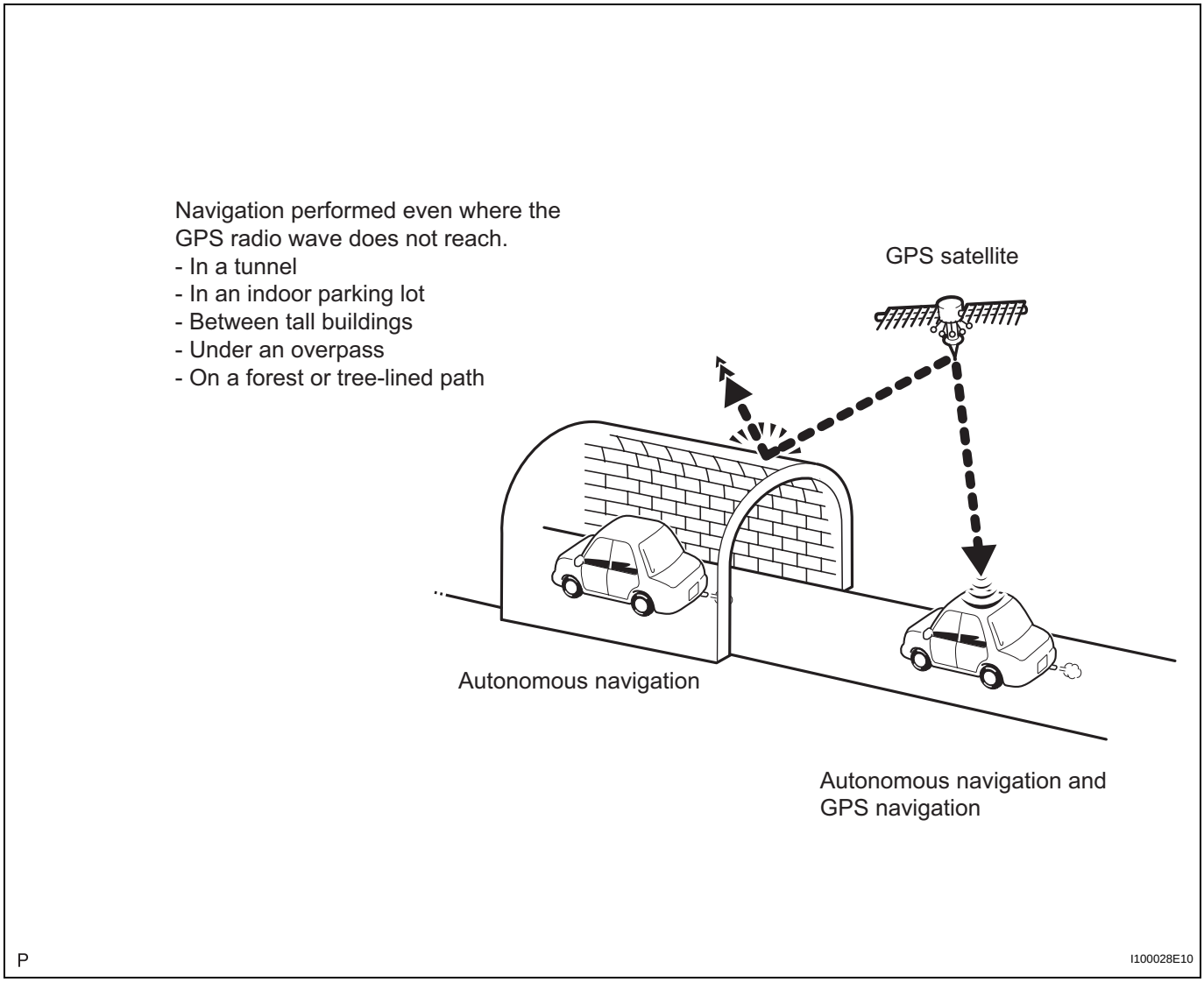

(b) Autonomous navigation
This method determines the relative vehicle position based on the running track determined by the gyro and vehicle speed sensors located in the navigation ECU.
(1) Gyro sensor
Calculates the direction by detecting angular velocity. It is located in the navigation ECU.
(2) Vehicle speed sensor
Used to calculated the vehicle running distance.

(c) GPS navigation (Satellite navigation)
This method detects the absolute vehicle position using radio waves from a GPS satellite*.
HINT:
*: GPS satellites were launched by the U.S. Department of Defense for military purposes.

Current longitude/latitude/altitude is determined using the radio wave arrival time from four satellites.

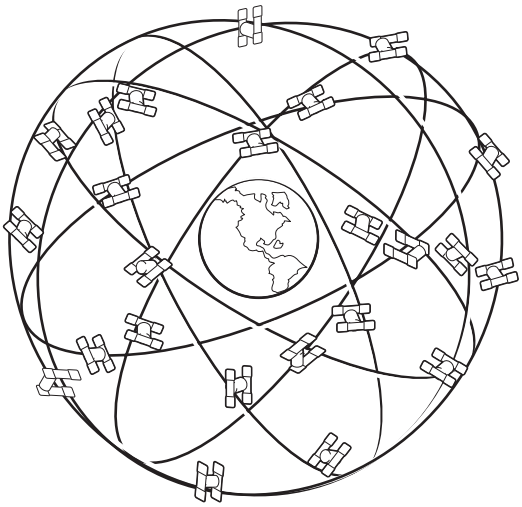

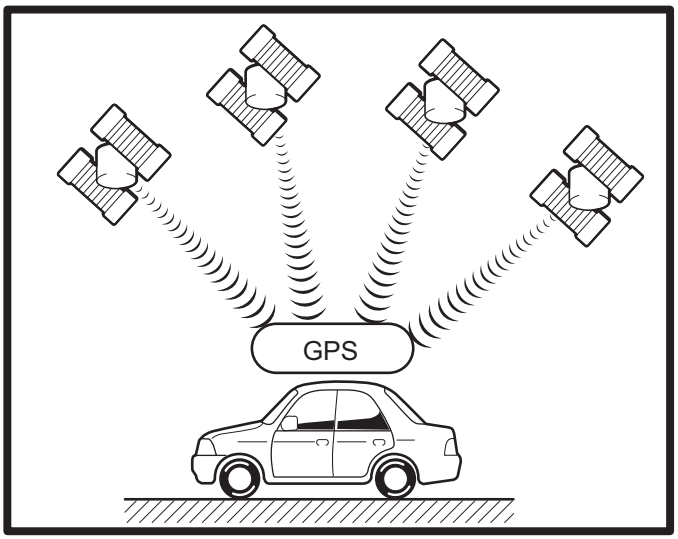

P

I100029E05

Number of satellites	Measurement	Description
2 or less	Measurement impossible	Vehicle position cannot be obtained because number of satellites is not enough.
3	2-dimensional measurement is possible	Vehicle position is obtained based on current longitude and latitude (this is less precise than 3-dimensional measurement).
4	3-dimensional measurement is possible	Vehicle position is obtained based on current longitude, latitude and altitude.

(d) Map matching
The current driving route is calculated by autonomous navigation (according to the gyro sensor and vehicle speed sensor) and GPS navigation. This information is then compared with possible road shapes from the map data in the map disc and the vehicle position is set onto the most appropriate road.

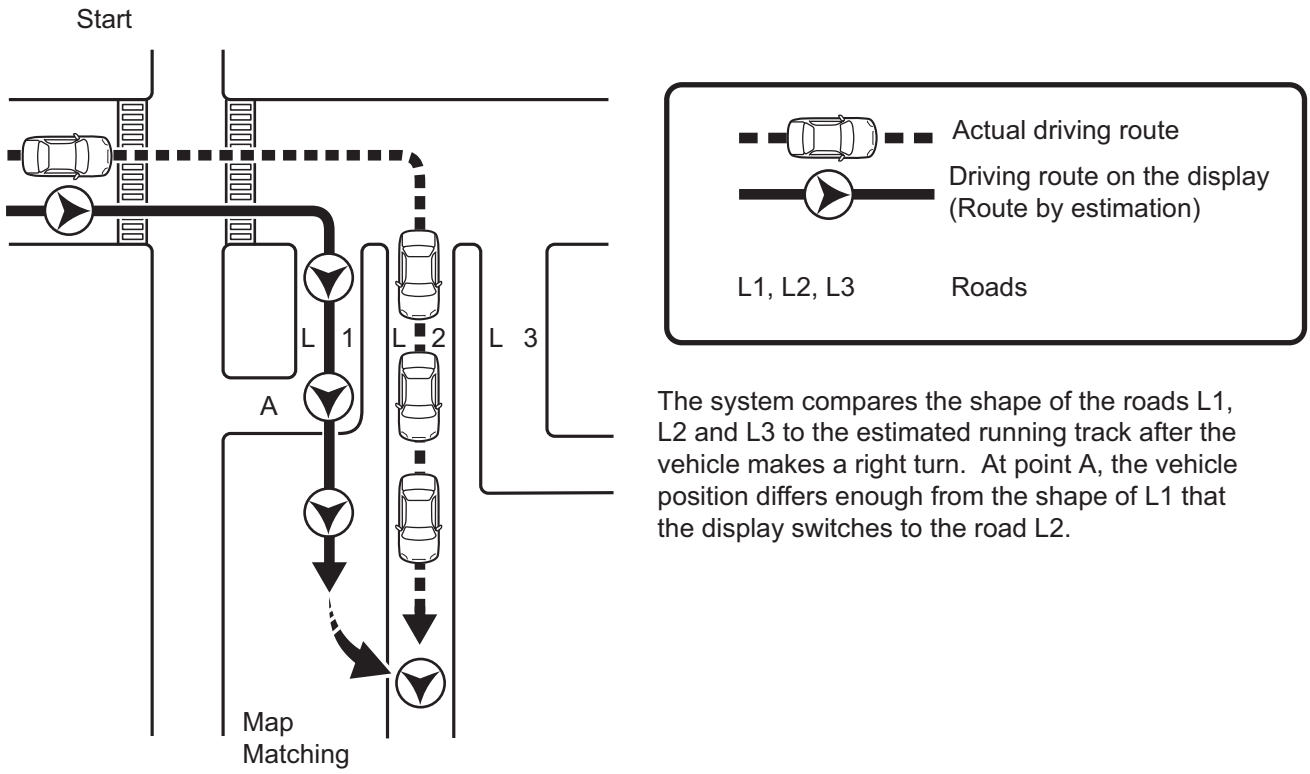

The system compares the shape of the roads L1, L2 and L3 to the estimated running track after the vehicle makes a right turn. At point A, the vehicle position differs enough from the shape of L1 that the display switches to the road L2.

P

I100030E09

2. MULTI-DISPLAY OUTLINE

(a) Touch switch

Touch switches are touch-sensitive (interactive) switches operated by touching the screen. When a switch is pressed, the outer glass bends in to contact the inner glass at the pressed position. By doing this, the voltage ratio is measured and the pressed position is detected.

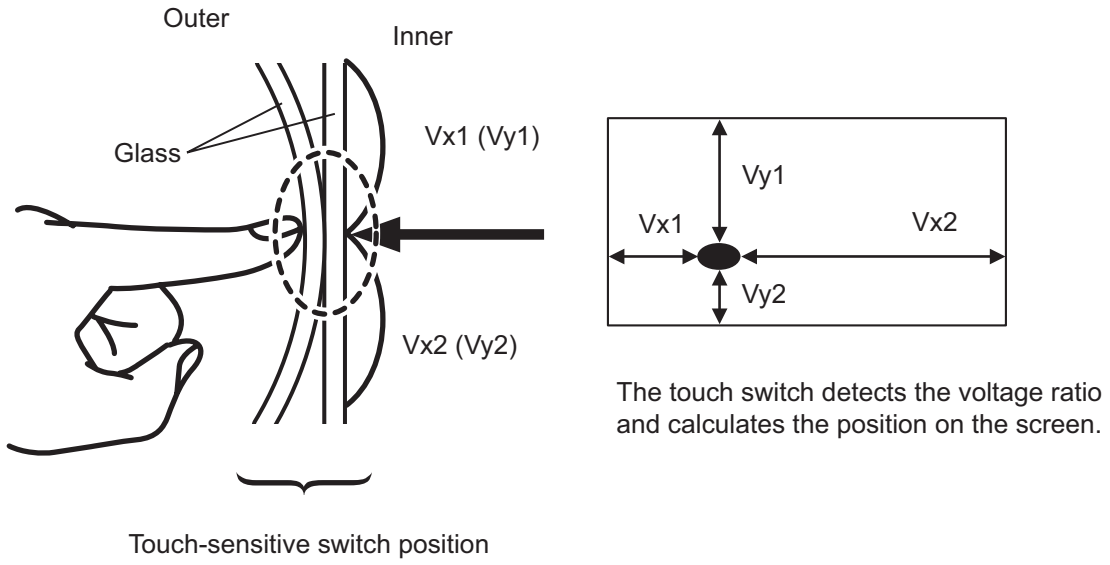

P

I100031E03

3. DVD (DIGITAL VERSATILE DISC) PLAYER OUTLINE (for Navigation Map)

(a) The navigation ECU uses a laser pickup to read the digital signals recorded on a DVD.

CAUTION:

Because the navigation system uses an invisible laser beam, do not look directly at the laser pickup. Be sure to only operate the navigation as instructed.

NOTICE:

- **Do not disassemble any part of the navigation ECU.**
- **Do not apply oil to the navigation ECU.**

NS

- **Do not insert anything but a DVD into the navigation ECU.**

BLUETOOTH is a trademark owned by Bluetooth SIG, Inc.

I101463E01

4. BLUETOOTH OUTLINE

(a) Bluetooth is a new wireless connection technology that uses the 2.4 GHz frequency band. This makes it possible to connect a cellular phone (Bluetooth capable phone*) to the multi-display (Bluetooth system is built-in), and use a handsfree function with the cellular phone in a pocket or bag. As a result, it is not necessary to use a connector for the cellular phone.
HINT:
*: The communication performance of Bluetooth may vary depending on the Bluetooth version, obstructions or radio wave conditions between communication devices, electromagnetic radiation, communication device sensitivity, or antenna capacity.

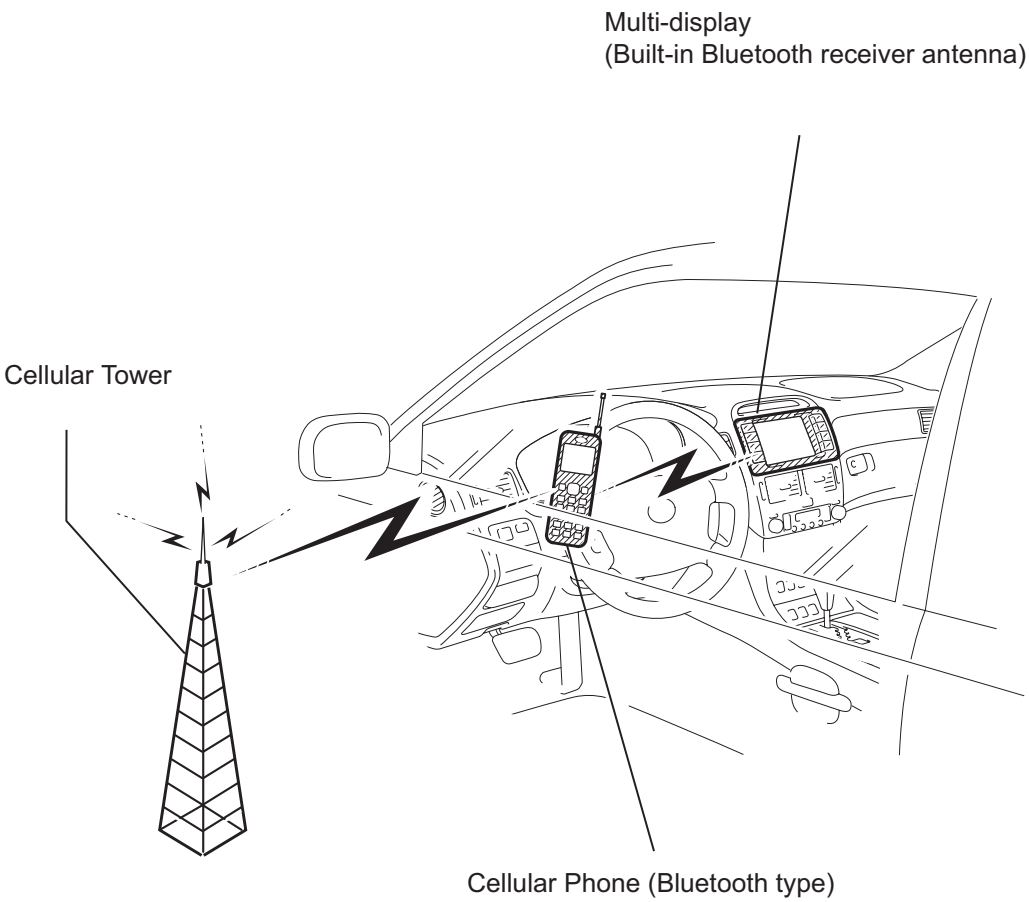

P

I100033E08

5. AVC-LAN DESCRIPTION

(a) What is AVC-LAN?

AVC-LAN, an abbreviation for "Audio Visual Communication Local Area Network", is a united standard developed by the manufacturers in affiliation with Toyota Motor Corporation. This standard pertains to audio and visual signals as well as switch and communication signals.

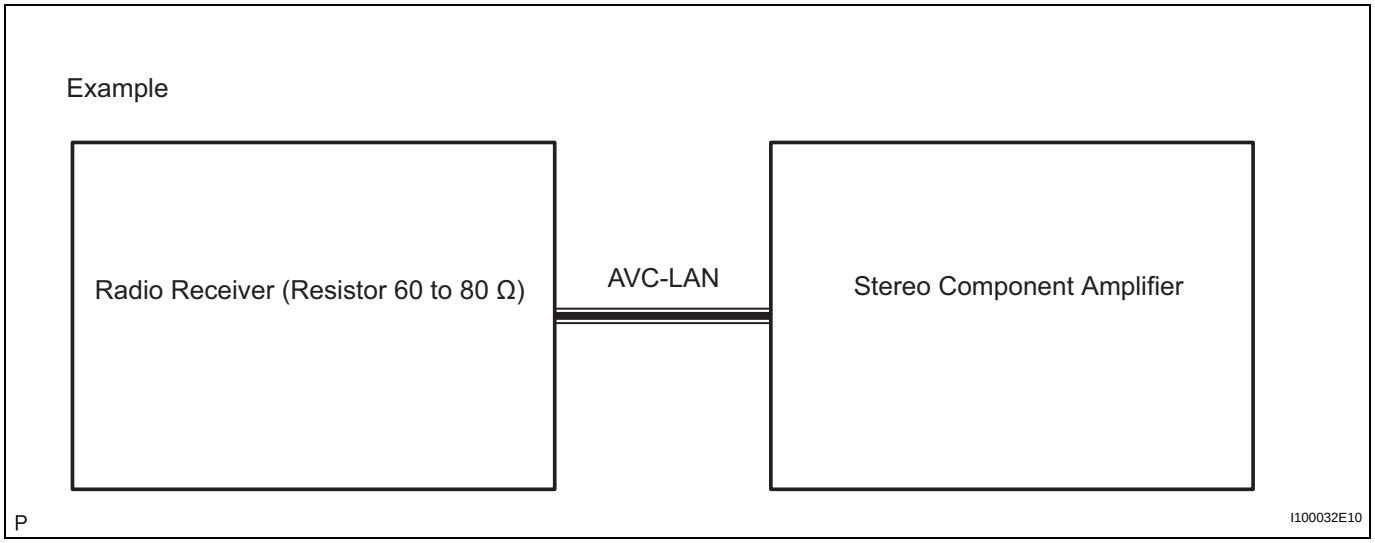

(b) Purpose:

Recently, car audio systems have rapidly developed and the functions have vastly changed. The conventional car audio system is being integrated with multimedia interfaces similar to those in navigation systems. At the same time, customers are demanding higher quality from their audio systems. This is merely an overview of the standardization background. The specific purposes are as follows:

(1) To solve sound problems, etc. caused by using components of different manufacturers thorough signal standardization.

(2) To allow each manufacturer to concentrate on developing products they do best. From this, reasonably priced products can be produced.

HINT:

- If a short +B or short to ground is detected in the AVC-LAN circuit, communication is interrupted and the audio system will stop functioning.
- If an audio system is equipped with a navigation system, the multi-display unit acts as the master unit.
  If the navigation system is not equipped, the audio head unit acts as the master unit instead. If the multi-display is equipped, it is the navigation ECU master unit.

6. COMMUNICATION SYSTEM OUTLINE

(a) Components of the navigation system communicate with each other via the AVC-LAN.

(b) Radio receiver assembly has enough resistance (60 to 80 Ω) necessary for transmitting the communication. This is essential for communication.

(c) If a short circuit or open circuit occurs in the AVC-LAN circuit, communication is interrupted and the navigation system will stop functioning.

7. DIAGNOSTIC FUNCTION OUTLINE

(a) The navigation system has a diagnostic function (the result is indicated on the master unit).

(b) A 3-digit hexadecimal component code (physical address) is allocated to each component on the AVC-LAN. Using this code, the component in the diagnostic function can be displayed.

HOW TO PROCEED WITH TROUBLESHOOTING

HINT:
- Use these procedures to troubleshoot the navigation system.
- *: Use intelligent tester.

1 VEHICLE BROUGHT TO WORKSHOP

NEXT

2 INSPECT BATTERY VOLTAGE

Standard voltage:
11 to 14 V
If the voltage is below 11 V, recharge or replace the battery before proceeding.

NEXT

3 BASIC INSPECTION

NS

(a) Turn the power switch ON (ACC).
(b) Check whether or not the display appears on the multi-display.
Result

Result	Proceed to
Display appears	A
Display does not appear	B

B → **Go to step 7**

A

4 INSPECT COMMUNICATION FUNCTION OF MULTIPLEX COMMUNICATION SYSTEM (BEAN)*

(a) Use the intelligent tester to check if the Multiplex Communication System (MPX) is functioning normally.
Result

Result	Proceed to
MPX DTC is not output	A
MPX DTC is output	B

B → **Go to MULTIPLEX COMMUNICATION SYSTEM**

A

5 CHECK FOR DTC

(a) Check for DTCs and note any codes that are output.
(b) Delete for DTC.
(c) Recheck for DTCs. Based on the DTC output in the first step, try to force output of the audio system DTC by simulating the operation indicated by the DTC.
HINT:
- If the system cannot enter the diagnosis mode, inspect each AVC-LAN communication signal and repair or replace problem parts.
- Even if the malfunction symptom is not confirmed, check for DTCs. This is because the system stores past DTCs.
- Refer to the detailed description on the diagnostic screen, as necessary (see page NS-27).
- Check and clear past diagnostic trouble codes. Check the diagnostic trouble code and inspect the area the code indicates.

Result

Result	Proceed to
DTC does not reoccur	A
DTC does not reoccurs	B

B → **Go to step 8**

A

6 PROBLEM SYMPTOMS TABLE

Result

Result	Proceed to
Fault is not listed in problem symptoms table	A
Fault is listed in problem symptoms table	B

B → **Go to step 8**

A

7 OVERALL ANALYSIS AND TROUBLESHOOTING

(a) Terminals of ECU (see page NS-40)

NEXT

NS

8	**ADJUST, REPAIR OR REPLACE**

NEXT

END

SYSTEM NORMAL CONDITION CHECK

1. CHECK NORMAL CONDITION

(a) If the symptom is applicable to any of the following, it is the intended behavior, not a malfunction.

Symptom	Answer
A longer route than expected is chosen.	Depending on the road conditions, the navigation ECU may determine that a longer route is quicker.
Even when distance priority is high, the shortest route is not shown.	Some paths may not be advised due to safety concerns.
When the vehicle is put into motion immediately after the hybrid system starts, the navigation system deviates from the actual position.	If the vehicle starts before the navigation system activates, the system may not react.
When running on certain types of roads, especially new roads, the vehicle position deviates from the actual position.	When the vehicle is driving on new roads not available on the map disc, the system attempts to match it to another nearby road, causing the position mark to deviate.

(b) The following symptoms are not a malfunction, but are caused by errors inherent in the GPS, gyro sensor, speed sensor, and navigation ECU.

(1) The current position mark may be displayed on a nearby parallel road.

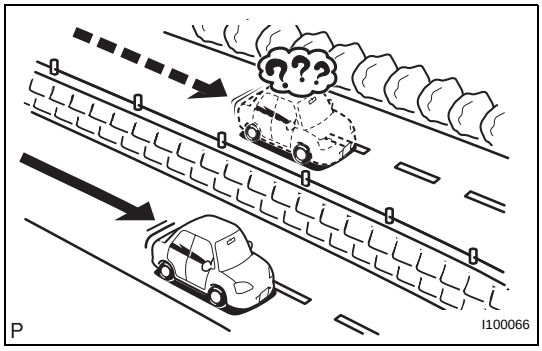

(2) Immediately after a fork in the road, the current vehicle position mark may be displayed on the wrong road.

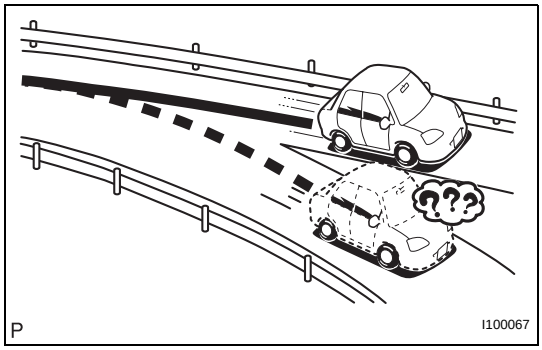

(3) When the vehicle turns right or left at an intersection, the current vehicle position mark may be displayed on a nearby parallel road.

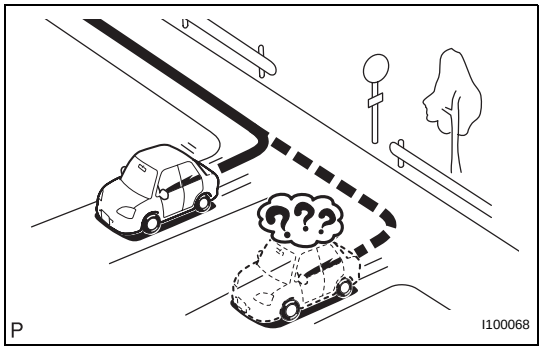

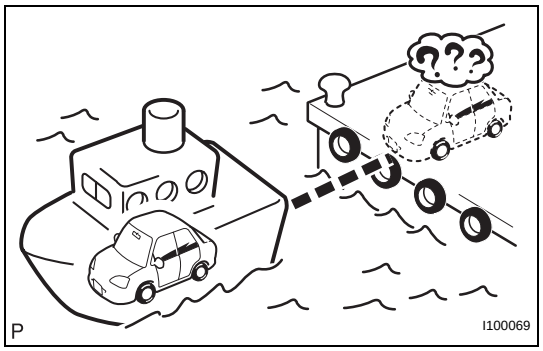

(4) When the vehicle is carried, such as on a ferry, and the vehicle itself is not running, the current vehicle position mark may be displayed in the position where the vehicle was until a measurement can be performed by GPS.

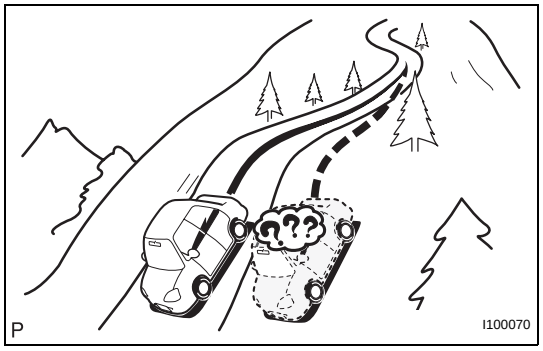

(5) When the vehicle runs on a steep hill, the current vehicle position mark may deviate from the correct position.

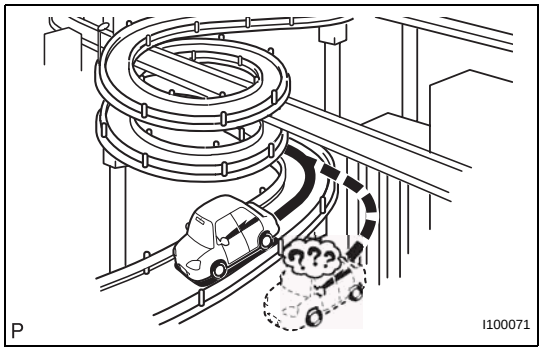

(6) When the vehicle makes a continuous turn of 360°, 720°, 1,080°, etc., the current vehicle position mark may deviate from the correct position.

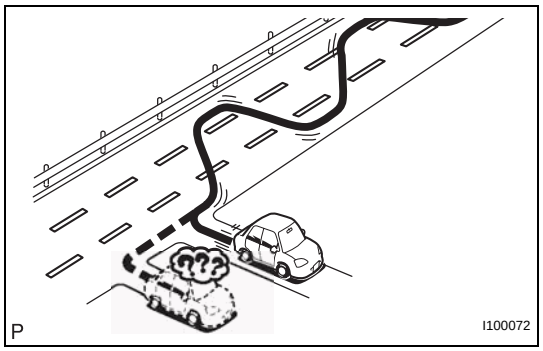

(7) When the vehicle moves erratically, such as constant lane changes, the current vehicle position mark may deviate from the correct position.

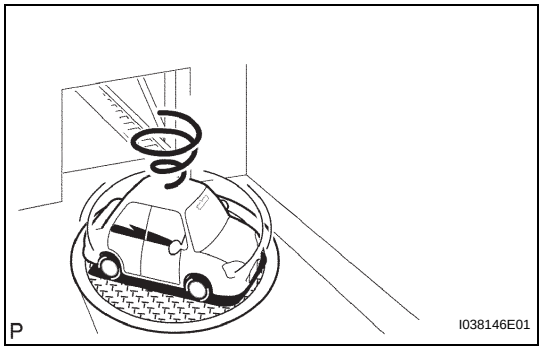

(8) When the power switch is turned ON (ACC or ON) on a turntable before parking, the current vehicle position mark may not point in the correct direction. The same will occur when the vehicle comes out of parking.

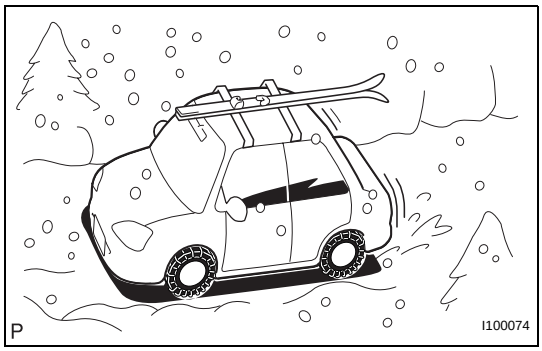

(9) When the vehicle runs on a snowy road or a mountain path with tire chains installed or using a spare tire, the current vehicle position mark may deviate from the correct position.

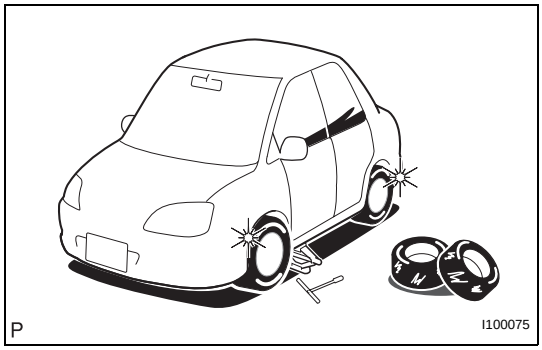

(10) When a tire is changed, the current vehicle position mark may deviate from the correct position.
HINT:
- The diameter of the tire may change, causing a speed sensor error.
- Performing the "tire change" in calibration mode will allow the system to correct the current vehicle position faster.

DISPLAY CHECK MODE

HINT:
- This mode checks the color display on the multi-display.
- Illustrations may differ from the actual vehicle depending on the device settings and options. Therefore, some detailed areas may not be exactly the same as on the actual vehicle.

1. ENTER DIAGNOSTIC MODE (See page NS-43)

2. DISPLAY CHECK

(a) Select "Display Check" from the "Diagnosis MENU" screen.

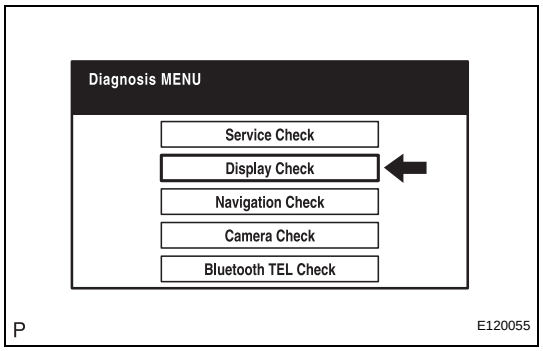

3. COLOR BAR CHECK

(a) Select "Color Bar Check" from the "Display Check" screen.

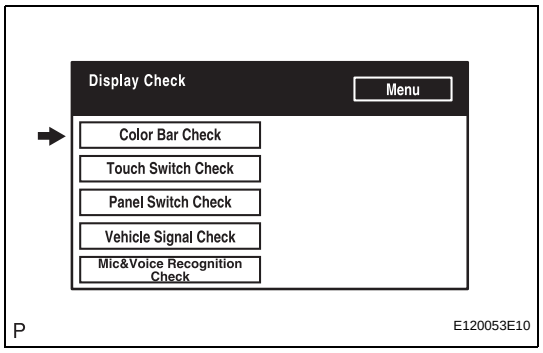

(b) Select a color bar from the "Color Bar Check Mode" screen.

(c) Check the display color.

HINT:
- The entire screen turns to the color or stripe selected.
- Touch the display to return to the "Color Bar Check" screen.

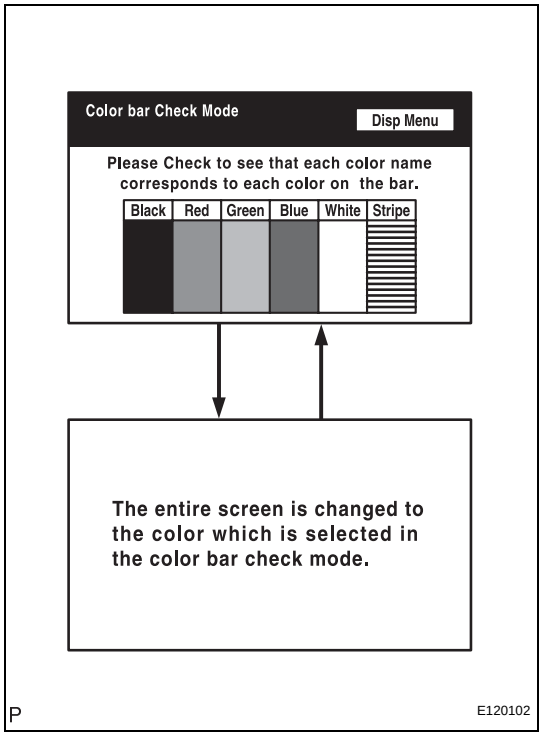

NS

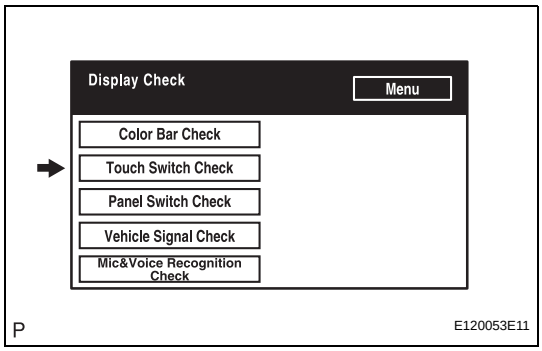

4. TOUCH SWITCH CHECK

(a) Select "Touch Switch Check" from the "Display Check" screen.

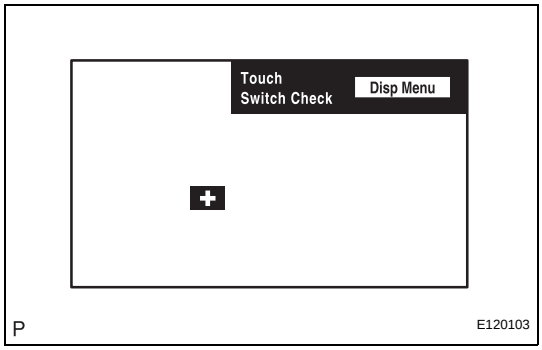

(b) Touch the display anywhere in the open area to perform the check when the "Touch Switch Check" screen is displayed.
HINT:
A "+" mark is displayed on the display is touched.

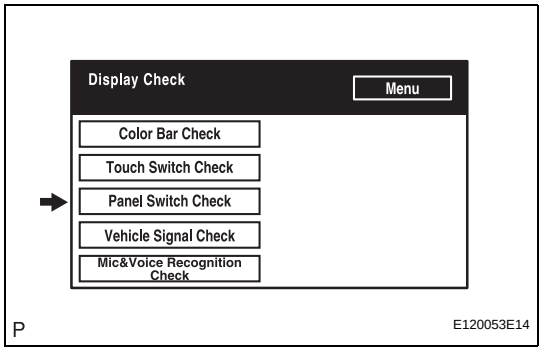

5. PANEL SWITCH CHECK

(a) Select "Panel Switch Check" from the "Display Check" screen.

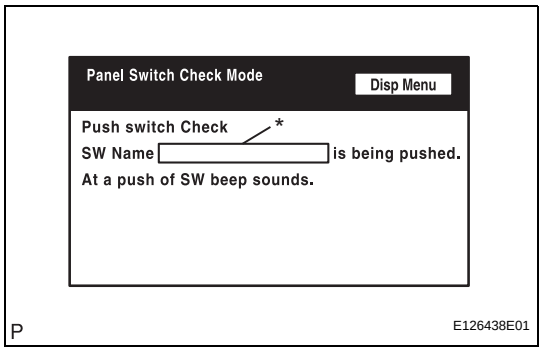

(b) Operate each switch and check that the switch name and condition are correctly displayed.

Display	Contents
Push switch name/*	• Name of the pressed switch is displayed. • If more than one switch is pressed, "MULTIPLE" is displayed.

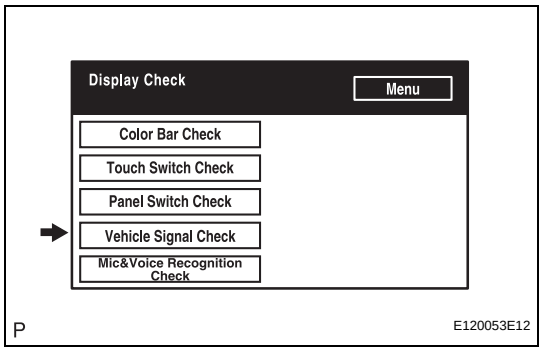

6. VEHICLE SIGNAL CHECK

(a) Select "Vehicle Signal Check" from the "Display Check" screen.

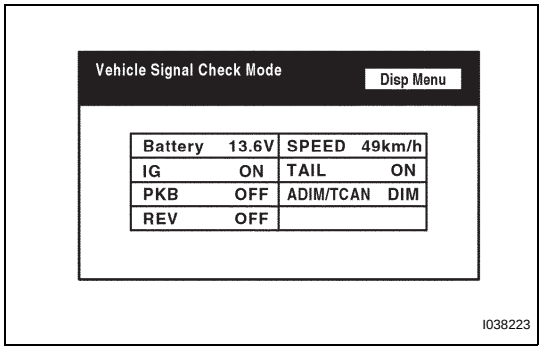

(b) When the "Vehicle Signal Check Mode" screen is displayed, check all the vehicle signal conditions.
HINT:
- Only conditions having inputs are displayed.
- This screen is updated once per second when input signals to the vehicle are changed.
- For details of this function, refer to DIAGNOSIS DISPLAY DETAILED DESCRIPTION (see page NS-27).

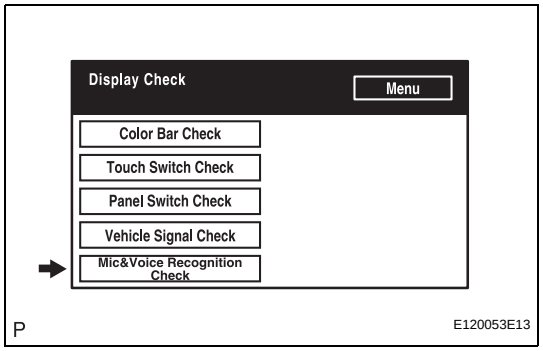

7. MIC & VOICE RECOGNITION CHECK

(a) Select "Mic & Voice Recognition Check" on the "Display Check" screen to display "MICROPHONE & VOICE RECOGNITION CHECK" screen.

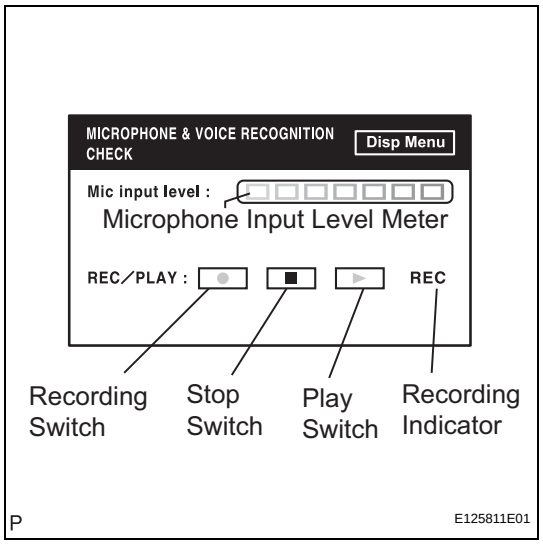

(b) When a voice is input into the microphone, check that the microphone input level meter changes according to the input voice.

(c) Push the recording switch and perform voice recording.

(d) Check that the recording indicator remains on while recording and that the recorded voice is played normally.
HINT:
For details of this function, refer to DIAGNOSIS DISPLAY DETAILED DESCRIPTION (see page NS-27).

NS

BLUETOOTH TEL CHECK MODE

HINT:
Illustrations may differ from the actual vehicle depending on the device settings and options. Therefore, some detailed area may not be shown the same as on the actual vehicle.

1. ENTER DIAGNOSTIC MODE (see page NS-43)

2. BLUETOOTH TEL CHECK

(a) Select "Bluetooth TEL Check" from the "Diagnosis MENU" screen.

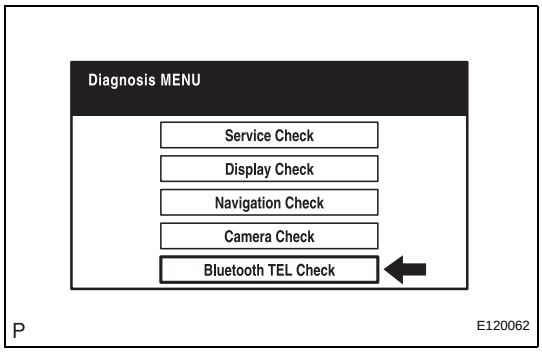

3. BLUETOOTH CHECK

(a) Select "Bluetooth Check" from the "Bluetooth Handsfree Check Menu" screen.

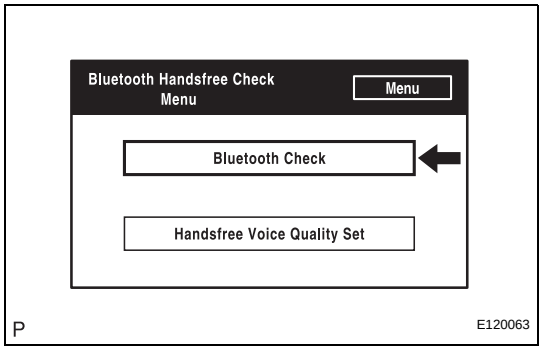

(b) Select "Serial Communication Log" from the "Bluetooth Check Menu" screen

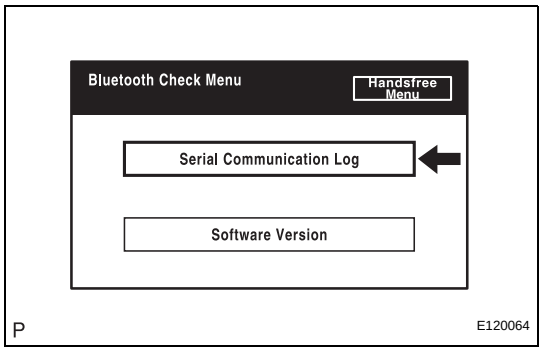

(1) The communication log data in the multi-display are displayed on this screen.
HINT:
The displayed data can be used as a reference.

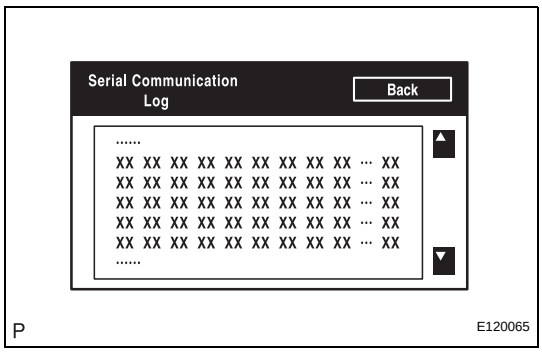

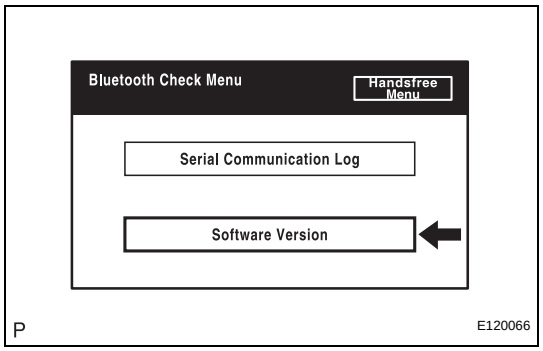

(c) Select "Software Version" from the "Bluetooth Check Menu" screen.

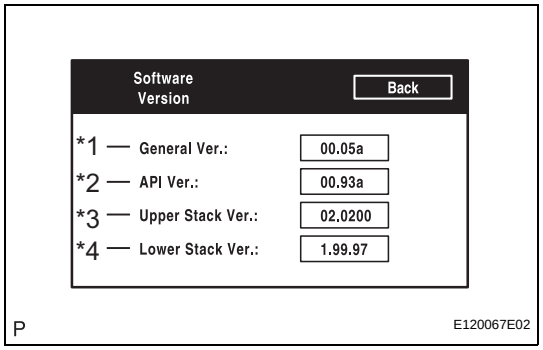

(1) Check the software version of the Bluetooth module.

Screen description:

Display	Contents
General Version/*1	• Overalll software version of Bluetooth module • If any of the API version, upper stack version, and low stack version is updated, the general version is upgraded.
API Version/*2	API software version is displayed.
Upper Stack Version/*3	Upper Stack version is displayed.
Lower Stack Version/*4	Lower Stack version is displayed.

NS

HINT:
This function is controlled by the multi-display.

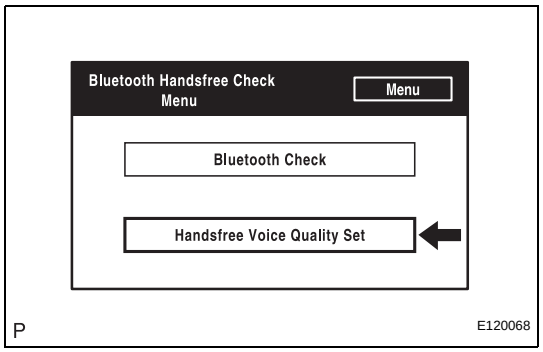

4. HANDSFREE VOICE QUALITY SET

(a) Select "Handsfree Voice Quality Set" from the "Bluetooth Handsfree Check Menu" screen.

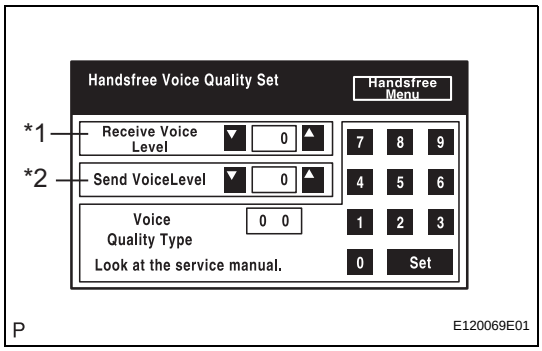

(b) Check the handsfree voice level.

Screen description:

Display	Contents
Received voice level adjustment/*1	Setting possible for the voice level received from Bluetooth compatible phones.
Sent voice level adjustment/*2	Setting possible for the voice sent to Bluetooth compatible phones.

HINT:
This function is controlled by the multi-display.
NOTICE:
"Voice Quality Type" should not be changed.

NAVIGATION CHECK MODE

HINT:
- This mode displays GPS satellite information.
- Illustrations may differ from the actual vehicle depending on the device settings and options. Therefore, some detailed areas may not be shown the same as on the actual vehicle.

1. ENTER DIAGNOSTIC MODE (see page NS-43)

2. NAVIGATION CHECK

(a) Select "Navigation Check" from the "Diagnosis MENU" screen.

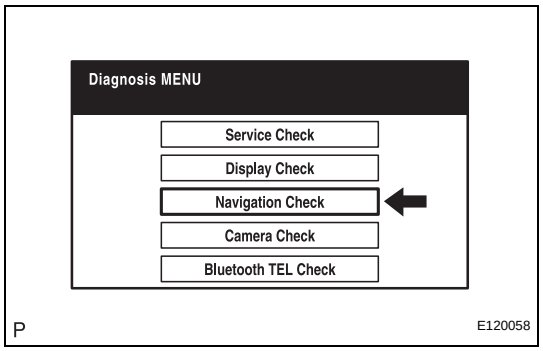

3. GPS INFORMATION

(a) Select "GPS Information" from the "Navigation Check" screen.

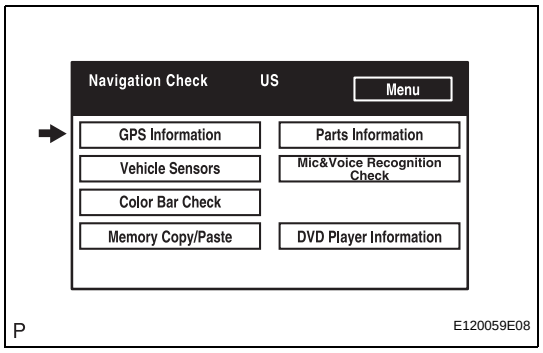

(b) When GPS information is displayed, check the GPS conditions.

HINT:
- This screen is updated once per second when input signals to the vehicle are changed.
- For details of this function, refer to DIAGNOSIS DISPLAY DETAILED DESCRIPTION (see page NS-27).

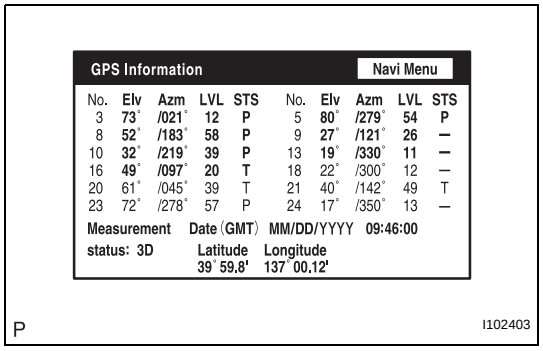

4. VEHICLE SENSORS

(a) Select "Vehicle Sensors" from the "Navigation Check" screen.

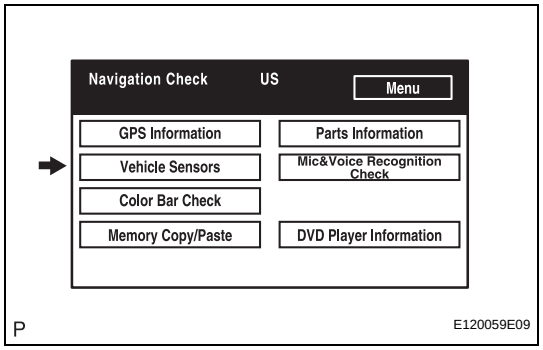

NS

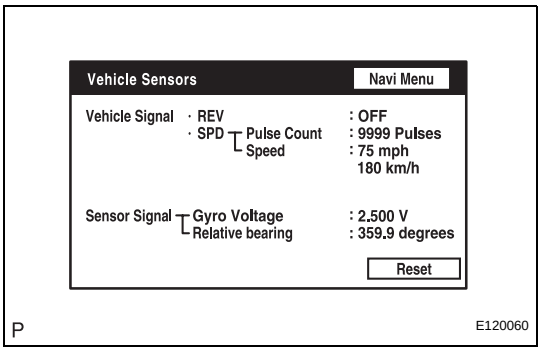

(b) Check all the signals and sensors when vehicle signal information is displayed.
HINT:
- This screen is updated once per second when input signals to the vehicle are changed.
- This screen displays vehicle signals input to the navigation ECU.
- For details of this function, refer to DIAGNOSIS DISPLAY DETAILED DESCRIPTION (see page NS-27).

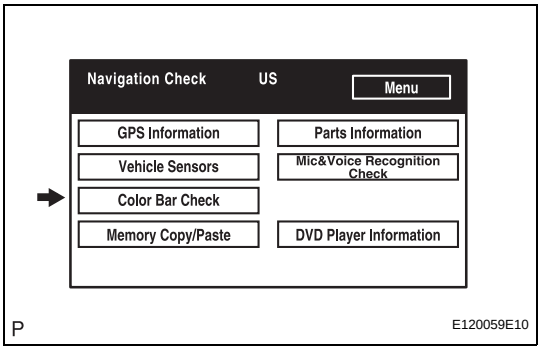

5. COLOR BAR CHECK

(a) Select "Color Bar Check" from the "Navigation Check" screen.

NS

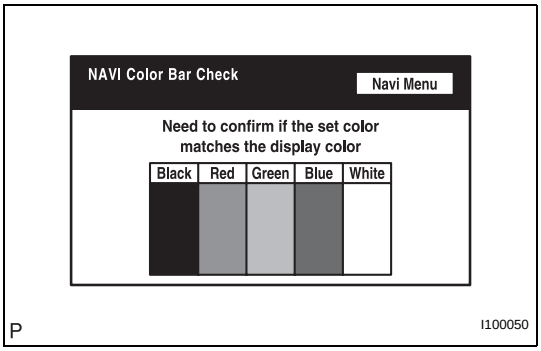

(b) Check each color of the color bar when the "NAVI Color Bar Check" screen is displayed.
HINT:
- Colors will not be displayed full-screen as in "Display Check Mode".
- This screen displays the navigation ECU display color.

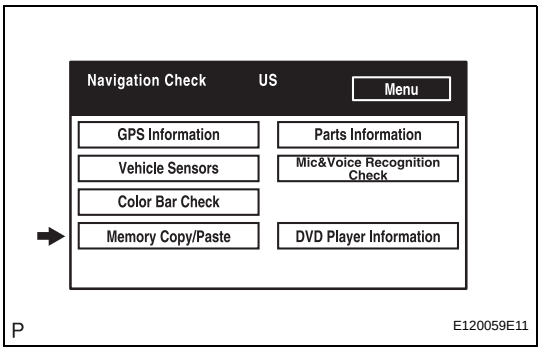

6. MEMORY COPY/PASTE CHECK

HINT:
This function cannot be used.

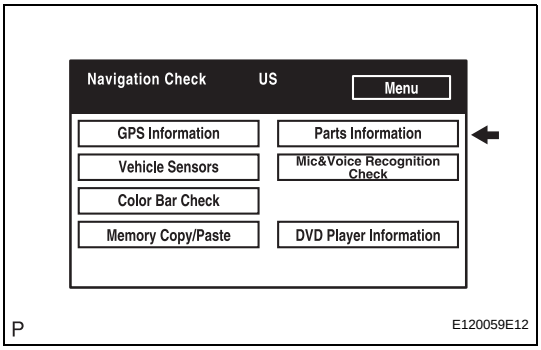

7. PARTS INFORMATION

(a) Select "Parts Information" from the "Navigation Check" screen.

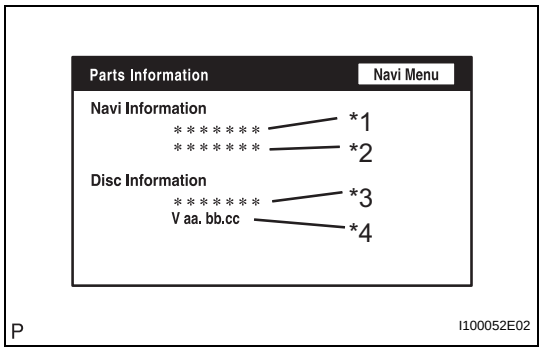

(b) Check the navigation and disc information when the "Parts Information" screen is displayed.

Screen description:

Display	Contents
Navigation Manufacturer/*1	Navigation ECU manufacturer is displayed.
Navigation Version/*2	Navigation ECU version is displayed.
Disc Manufacturer/*3	Map disc manufacturer is displayed.
Disc Version/*4	Map disc version is displayed.

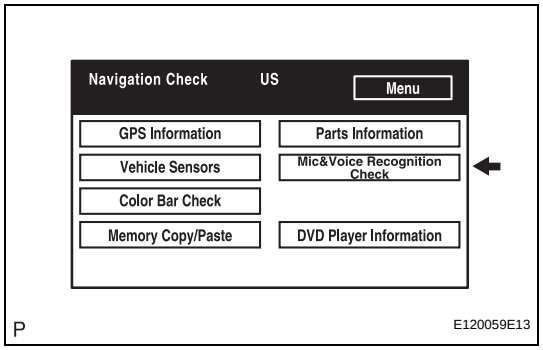

8. MIC & VOICE RECOGNITION CHECK

(a) Select "Mic & Voice Recognition Check" on the "Display Check" screen to display "MICROPHONE & VOICE RECOGNITION CHECK" screen.

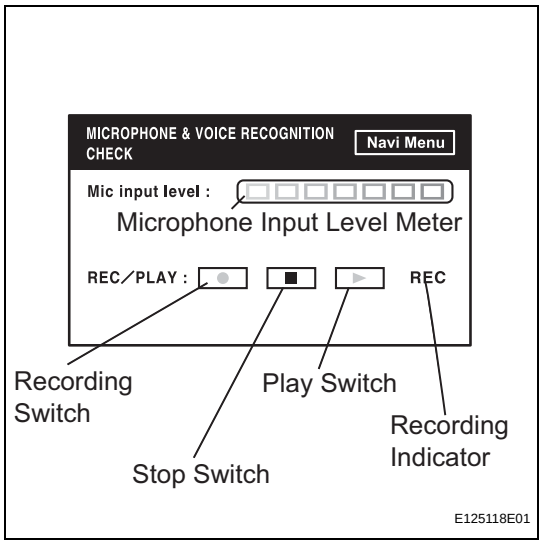

(b) When a voice is input into the microphone, check that the microphone input level meter changes according to the input voice.

(c) Push the recording switch and perform voice recording.

(d) Check that the recording indicator remains on while recording and that the recorded voice is played normally.

HINT:

- For details of this function, refer to DIAGNOSIS DISPLAY DETAILED DESCRIPTION (see page NS-27).
- This function is controlled by the built-in navigation ECU.

NS

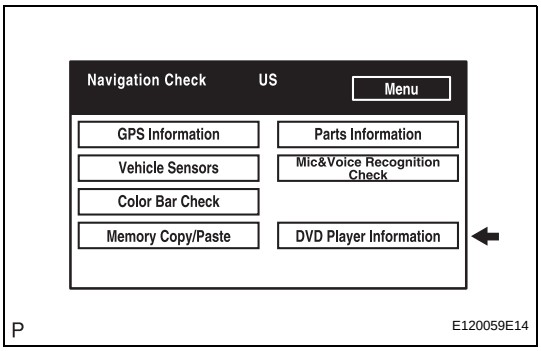

9. DVD PLAYER INFORMATION CHECK

(a) Select "DVD Player Information" from the "Navigation Check" screen.

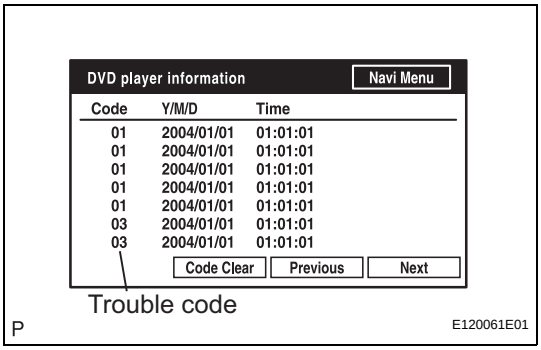

(b) Check for DTCs.

HINT:

- This is a DVD player check function in the navigation ECU.
- For details of this function, refer to DIAGNOSIS DISPLAY DETAILED DESCRIPTION (see page NS-27).

NS

DIAGNOSIS DISPLAY DETAILED DESCRIPTION

HINT:
- This section contains a detailed description of displays within diagnostic mode.
- Illustrations may differ from the actual vehicle depending on the device settings and options. Therefore, some detailed areas may not be exactly the same as on the actual vehicle.

1. SYSTEM CHECK

(a) System Check Mode Screen

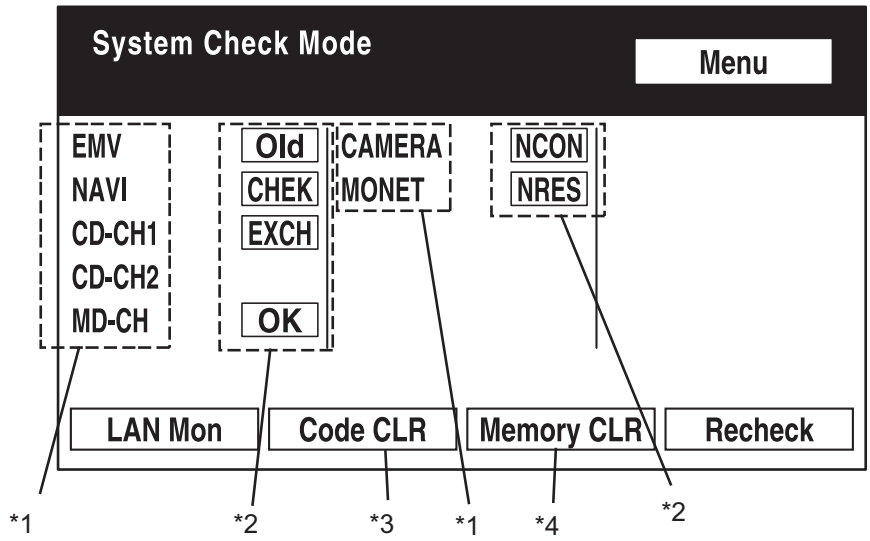

P

I100055E08

(1) Device Names and Hardware Address/*1

HINT:
- Registered device names are displayed.
- If a device name is unknown to the system, its physical address is shown instead.

Address No.	Name	Address No.	Name
110	EMV	120	AVX
128	1DIN TV	140	AVN
144	G-BOOK	178	NAVI
17C	MONET	190	AUDIO H/U
1AC	CAMERA-C	1B0	Rr-TV
1C0	Rr-CONT	19D	BT-HF
1C4	PANEL	1C6	G/W
1C8	FM-M-LCD	1D8	CONT-SW
1EC	Body	118	EMVN
1F1	XM	1F2	SIRIUS
230	TV-TUNER	240	CD-CH2
250	DVD-CH	280	CAMERA
360	CD-CH1	3A0	MD-CH

Address No.	Name	Address No.	Name
17D	TEL	440	DSP-AMP
530	ETC	1F6	RSE
1A0	DVD-P	1D6	CLOCK
238	DTV	480	AMP

(2) Check Result/*2
HINT:
Result codes for all devices are displayed.

Result	Meaning	Action
OK	Device did not respond with DTC (excluding communication DTCs from AVC-LAN).	-
EXCH	Device responds with "replace" type DTC.	Look up DTC in "Unit Check Mode" and replace device.
CHEK	Device responds with "check" type DTC.	Look up DTC in "Unit Check Mode".
NCON	Device was previously present, but does not respond in diagnostic mode.	1. Check power supply wire harness of device. 2. Check AVC-LAN of device.
Old	Device responds with "old" type DTC.	Look up DTC in "Unit Check Mode".
NRES	Device responds in diagnostic mode, but gives no DTC information.	1. Check power supply wire harness of device. 2. Check AVC-LAN of device.

NS

(3) Code Clear/*3
- Present DTCs are cleared.
- Press the "Code CLR" switch for 3 seconds.

(4) Memory Clear/*4
- Present and past DTCs and registered connected device names are cleared.
- Press the "Memory CLR" switch for 3 seconds.

(b) Diagnosis MENU Screen

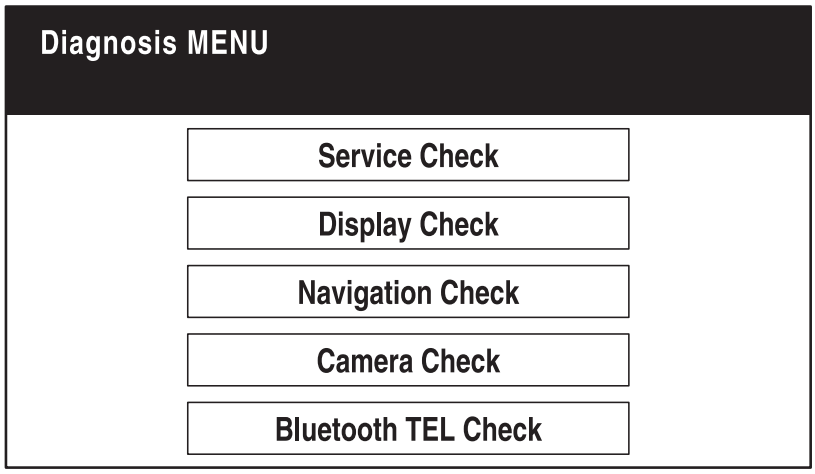

P

E120070

HINT:
Each item is grayed out or not displayed based on the device settings.

(c) Unit Check Mode Screen

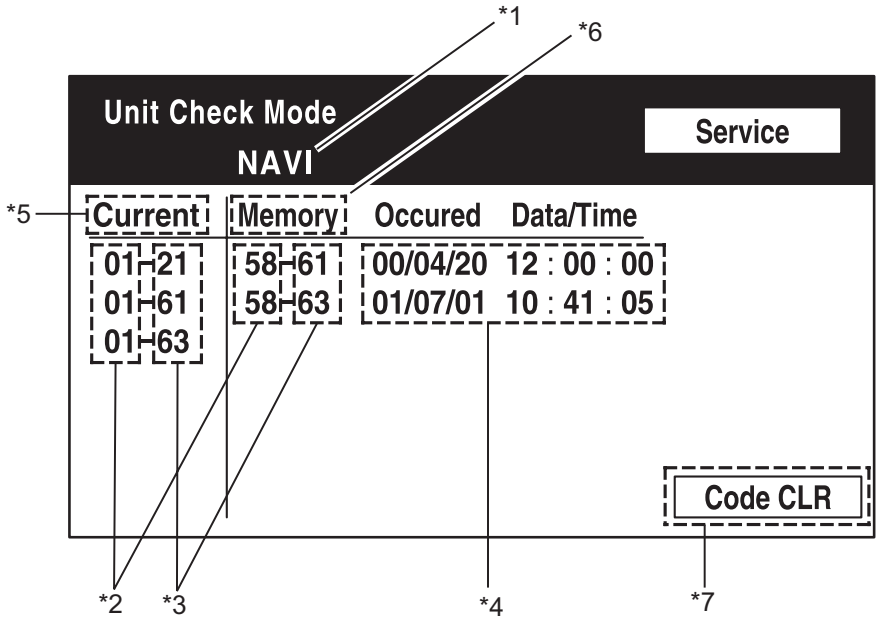

P

E120071E02

NS

Screen description:

Display	Contents
Device name/*1	Target device
Segment/*2	Target device logical address
DTC/*3	DTC (Diagnostic Trouble Code)
Timestamp/*4	Time and date of past DTCs are displayed (Year is displayed in 2-digit format).
Present Code/*5	DTCs output at service check are displayed.
Past Code/*6	Diagnostic memory results and recorded DTCs are displayed.
Diagnosis Clear Switch/*7	Pushing this switch for 3 seconds clears diagnostic memory data of target device (both response to diagnostic system check result and displayed data is cleared).

(d) LAN Monitor (Original) Screen

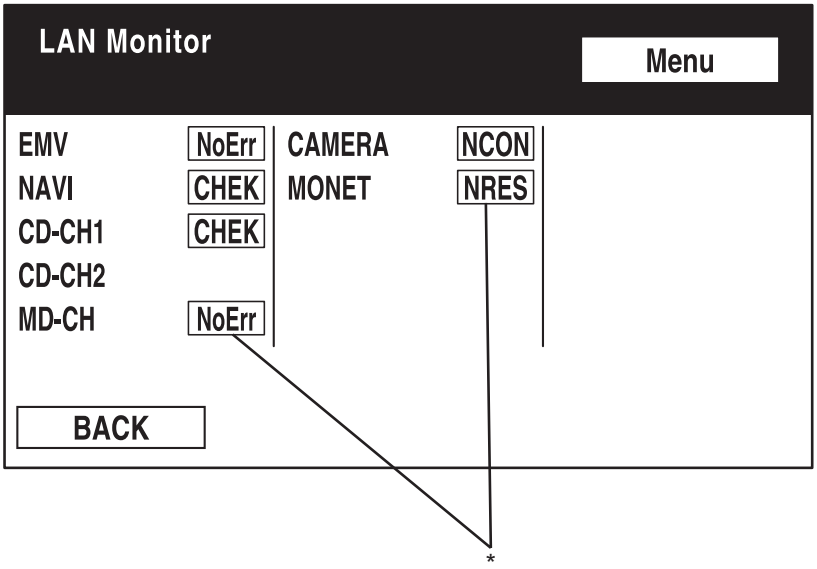

P

I100058E05

NS

(1) Check Result/*
HINT:
Check results of all the devices are displayed.

Result	Meaning	Action
No Err (OK)	There are no communication DTCs.	-
CHEK	Device responds with "check" type DTC.	Look up DTC in "Unit Check Mode".
NCON	Device was previously present, but does not respond in diagnostic mode.	1. Check power supply wire harness of device. 2. Check AVC-LAN of device.
Old	Device responded with "old" type DTC.	Look up DTC in "Unit Check Mode".
NRES	Device responds in diagnostic mode, but gives no DTC information.	1. Check power supply wire harness of device. 2. Check AVC-LAN of device.

(e) LAN Monitor (Individual) Screen

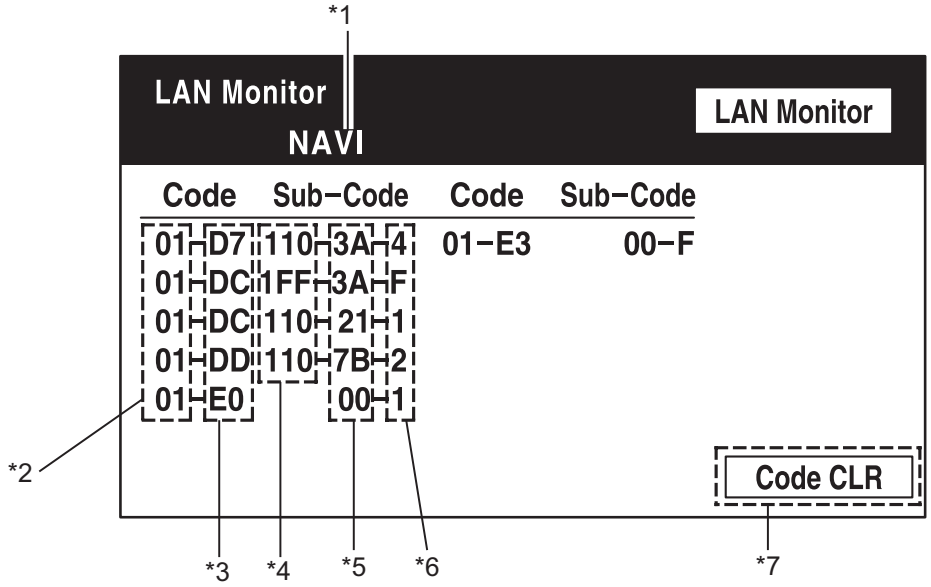

P E120072E01

Screen description:

Display	Contents
Device name/*1	Target device
Segment/*2	Target logical address
DTC/*3	DTC (Diagnostic Trouble Code)
Sub-code (device address)/*4	Physical address stored with DTC (If there is no address, nothing is displayed).
Connection check No./*5	Connection check number stored with DTC
DTC occurrence/*6	Number of times same DTC has been recorded
Diagnosis Clear Switch/*7	Pushing this switch for 3 seconds clears diagnostic memory data of target device (both response to diagnostic system check result and displayed data is cleared).

2. DISPLAY CHECK

(a) Vehicle Signal Check Mode Screen

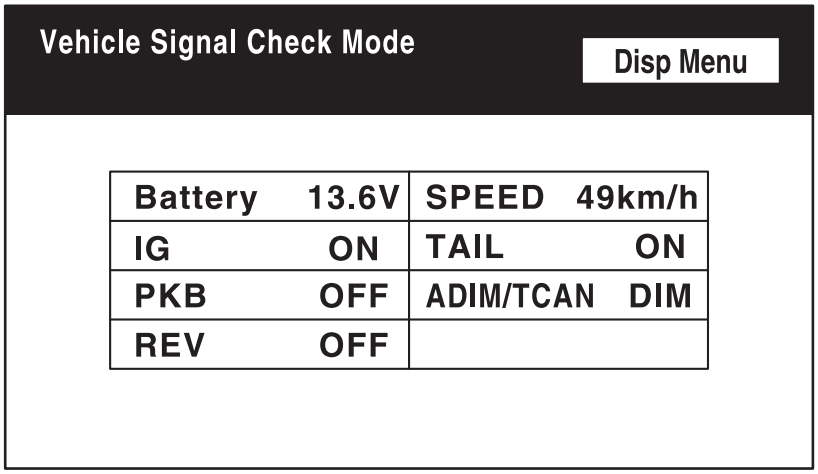

P

I100060

NS

Screen description:

Name	Contents
Battery	Battery voltage is displayed.
PKB	Parking brake ON / OFF state is displayed.
REV	Reverse signal ON / OFF state is displayed.
IG	Power switch ON / OFF state is displayed.
ADIM/TCAN	Brightness state DIM (with) / BRIGHT (without) is displayed.
TAIL	TAIL signal (Light control switch) ON / OFF state is displayed.
SPEED	Vehicle speed is displayed in km/h.

HINT:

- Only items sending a vehicle signal will be displayed.
- This screen is updated once per second when input signals to the vehicle are changed.

(b) Microphone & Voice Recognition Check Screen

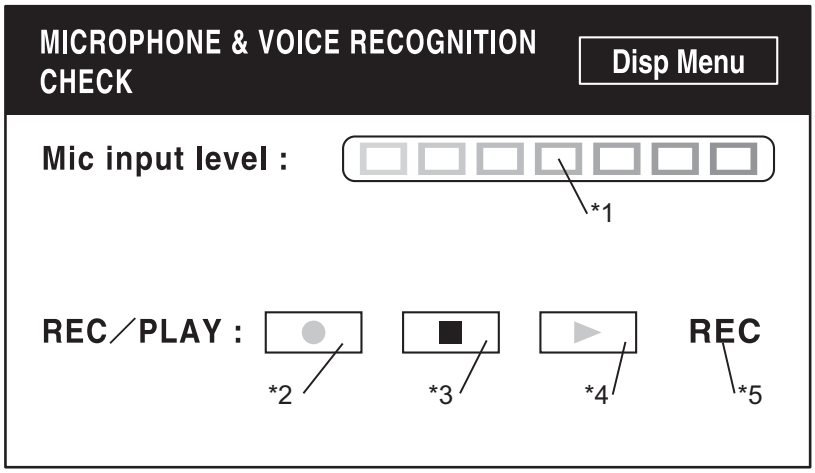

P

E125091E01

Screen description:

Name	Contents
Microphone input level meter/*1	Monitors microphone input level every 100 ms and displays results in 8 different levels.
Recording switch/*2	Starts recording.
Stop switch/*3	Stops recording.
Play switch/*4	Plays recorded voice.
Recording indicator/*5	Comes on while recording.

HINT:

- The microphone input function is on at all times when this screen is displayed.
- While recording or playing, the switches other than the stop switch cannot be pushed.
- When no voice is recorded, the play switch cannot be pushed.
- Recording will stop after 5 seconds or by pushing the stop switch.

3. NAVIGATION CHECK

(a) Navigation Check Screen

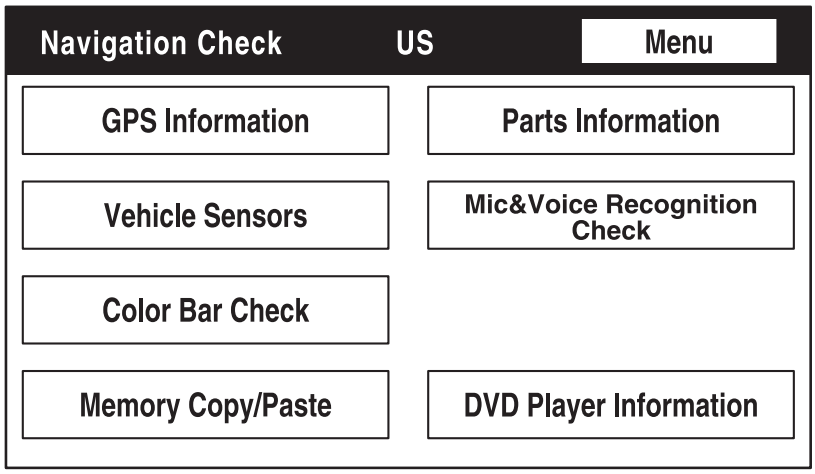

P

E120076E01

NS

HINT:
Each item is grayed out or not displayed based on the device settings.

(b) GPS Information Screen

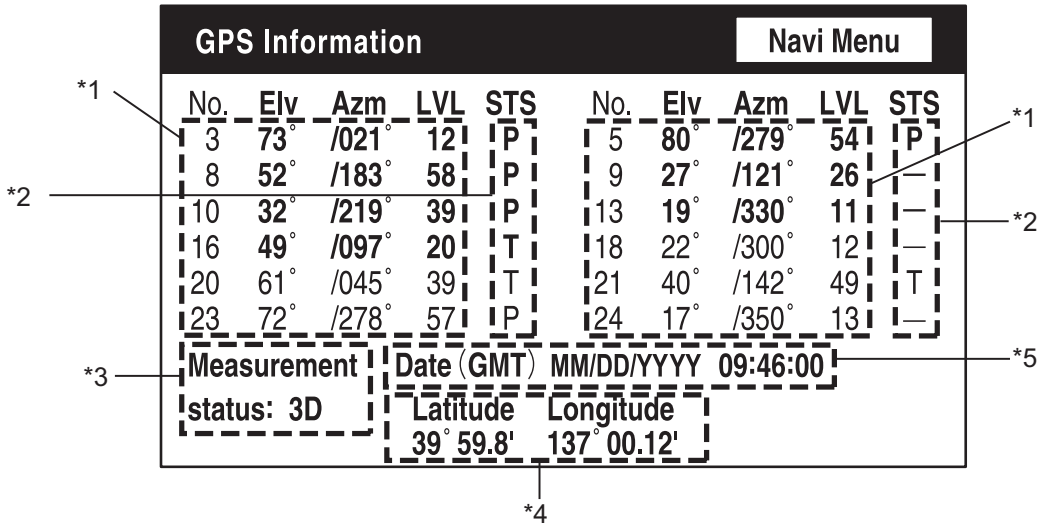

P

I102405E01

(1) Satellite information/*1
Information from a maximum of 12 satellites is displayed on the screen. This information includes the target GPS satellite number, elevation angle, direction, and signal level.

(2) Receiving condition/*2

(DENSO model):

Display	Contents
T	System is receiving GPS signal, but is not using it for location.
P	System is using GPS signal for location.
-	System cannot receive GPS signal.

(AISIN AW model):

Display	Contents
01H	System cannot receive a GPS signal.
02H	System is tracing a satellite.
03H	System is receiving a GPS signal, but is not using it for location.
04H	System is using the GPS signal for location.

Measurement information/*3:

Display	Contents
2D	2-dimensional location method is being used.
3D	3-dimensional location method is being used.
NG	Location data cannot be used.
Error	Reception error has occurred.
-	Any other state.

Position information/*4

Display	Contents
Position	Latitude and longitude information on current position is displayed.

Date information/*5:

Display	Contents
Date	Date / time information obtained from GPS signal is displayed in Greenwich mean time (GMT). Last 4 digits are displayed.

(c) Vehicle Sensors Screen

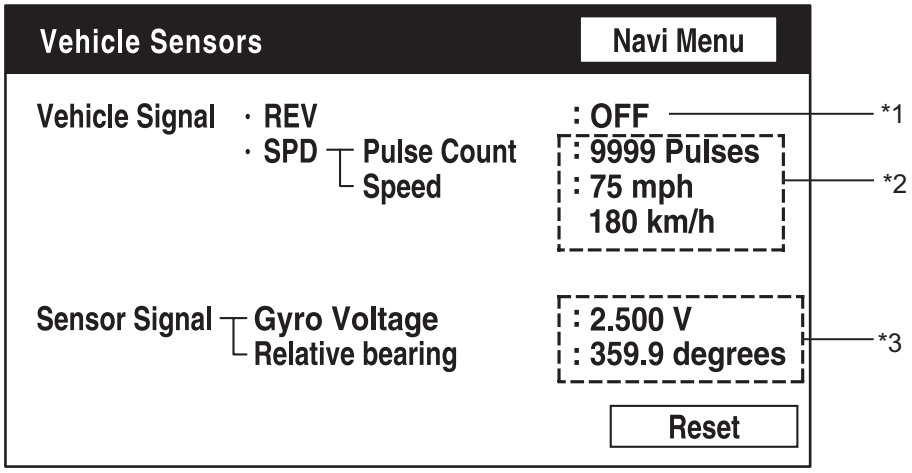

P

E120077E01

NS

Vehicle signal:

Display	Contents
REV/*1	REV signal ON/OFF state is displayed.
SPD/*2	SPD signal condition is displayed.

Sensor signal:

Display	Contents
Gyro sensor/*3	Gyro sensor output condition is displayed (when vehicle runs straight or is stationary, voltage is approximately 2.5 V).

HINT:
Signals are updated once per second only when vehicle sensor signals are changed.

(d) Microphone & Voice Recognition Check Screen

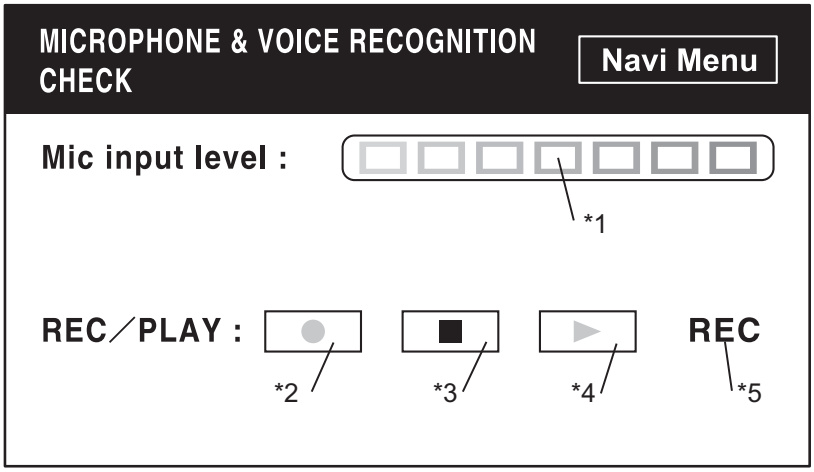

P
E125119E01

Screen description:

Display	Contents
Microphone input level meter/*1	Monitors the microphone input level every 100 ms and displays results in 8 different levels.
Recording switch/*2	Starts recording.
Stop switch/*3	Starts recording.
Play switch/*4	Plays recorded voice.
Recording indicator/*5	Comes on while recording.

HINT:
- The microphone input function is on at all times when this screen is displayed.
- While recording or playing, the switches other than the stop switch cannot be pushed.
- When no voice is recorded, the play switch cannot be pushed.
- Recording will stop after 5 seconds or by pushing the stop switch.

NS

(e) DVD Player Information Screen

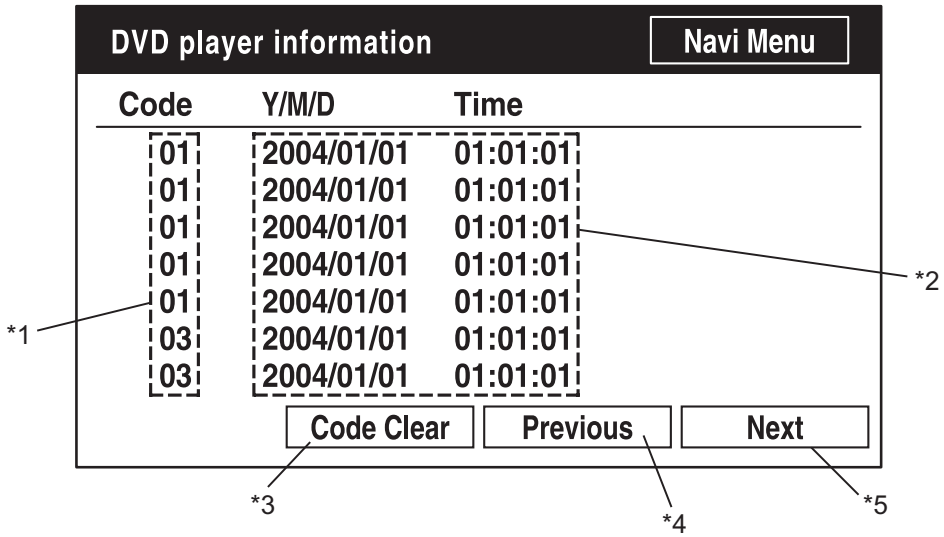

P E120078E01

Screen description:

Display	Contents
Trouble code/*1	Each code corresponding to malfunctions is displayed. For details, refer to "Trouble Code Description".
Occurrence time/*2	• Date (year, month, day) and time (hour, minute, second) when trouble code was detected are displayed as time stamp (Greenwich mean time). • Time data to be displayed are received from GPS receiver.
Trouble code clear switch/*3	All code data being displayed is cleared by pushing this switch for 3 seconds.
Returning switch/*4	Previous page is displayed. If current displayed page is first page, this switch cannot be operated.
Proceeding switch/*5	Next page is displayed. If current displayed page is last page, this switch cannot be operated.

Trouble code description:

Code	Malfunction	Countermeasure
01	Cannot be recognized	Replace navigation ECU.
03	Cannot be read	Follow inspection procedure for DTC 58-42 (see page NS-80).

HINT:
This is a DVD player check function in the navigation ECU.

NS

PROBLEM SYMPTOMS TABLE

Display function

Symptom	Suspected area	See page
Pressing power switch does not turn on system.	1. Multi-display power source circuit	NS-167
	2. AVC-LAN circuit	NS-136
	3. Multi-display	-
No image appears on multi-display.	1. Proceed to "No image Appears on Multi-display"	NS-88
	2. Multi-display power source circuit	NS-167
	3. Illumination circuit	NS-131
	4. AVC-LAN circuit	NS-136
	5. Multi-display	-
Illumination for panel switch does not come on with TAIL switch on.	1. Proceed to "Illumination for Panel Switch does not Come on with Tail Switch ON"	NS-89
	2. Illumination circuit	NS-131
	3. Multi-display	-
Display does not dim when light control switch is turn on.	1. Proceed to "Display does not DIM when Light Control Switch is Turn ON"	NS-90
	2. Illumination circuit	NS-131
	3. Multi-display	-
Power does not turn off (The screen remains on).	1. Multi-display power source circuit	NS-167
	2. Multi-display	-
Panel switches do not function.	1. Proceed to "Panel Switches do not Function"	NS-91
	2. Steering pad switch circuit	NS-126
	3. Multi-display power source circuit	NS-167
	4. Multi-display	-
Touch panel switch does not function.	1. Proceed to "Touch Panel Switch does not Function"	NS-92
	2. Steering pad switch circuit	NS-126
	3. Multi-display power source circuit	NS-167
	4. Multi-display	-
Navigation screen is not displayed.	1. Display signal circuit between navigation ECU and multi-display	NS-147
	2. Map disc	-
	3. Navigation ECU	-
	4. Multi-display	-
Navigation screen flicker or color distortion.	1. Proceed to "Screen Flicker or Color Distortion"	NS-93
	2. Display signal circuit between navigation ECU and multi-display	NS-147
	3. Navigation ECU	-
	4. Multi-display	-
Navigation function switches can be operated while vehicle is running.	Vehicle speed signal circuit between multi-display and combination meter	NS-140

Navigation function

Symptom	Suspected area	See page
Map disc cannot be inserted.	1. Proceed to "Map Disc cannot be inserted"	NS-95
	2. Navigation ECU power source circuit	NS-169
	3. Navigation ECU	-
Map disc cannot be ejected.	1. Proceed to "Map Disc cannot be Ejected"	NS-96
	2. Navigation ECU power source circuit	NS-169
	3. Navigation ECU	-

Symptom	Suspected area	See page
Vehicle position mark deviates greatly.	1. Proceed to "Vehicle Position Mark Deviates Greatly"	NS-97
	2. GPS antenna	-
	3. Navigation ECU	-
Cursor or map rotates when vehicle is stopped.	1. Proceed to "Cursor or Map Rotates when Vehicle is Stopped"	NS-99
	2. Navigation ECU	-
Vehicle position mark is not updated.	1. Proceed to "Vehicle Position Mark is not Updated"	NS-100
	2. Map disc	-
	3. Navigation ECU	-
Current position display does not appear.	1. Proceed to "Current Position Display does not Appear"	NS-101
	2. Map disc	-
	3. GPS antenna	-
	4. Navigation ECU	-
GPS mark is not displayed.	1. Proceed to "GPS Mark is not Displayed"	NS-102
	2. GPS antenna	-
	3. Navigation ECU	-
Voice guidance does not function.	1. Proceed to "Voice Guidance does not Function"	NS-105
	2. Navigation voice speaker circuit	NS-144
	3. Map disc	-
	4. Navigation ECU	-
	5. Stereo component amplifier	-
Map display incomplete.	1. Proceed to "Map Display Incomplete"	NS-108
	2. Map disc	-
	3. Navigation ECU	-
Route cannot be calculated.	1. Proceed to "Route cannot be Calculated"	NS-109
	2. Map disc	-
	3. Navigation ECU	-
Voice recognition difficulty.	1. Proceed to "Voice Recognition Difficulty"	NS-112
	2. Navigation ECU	-
Voice is not recognized.	1. Proceed to "Voice is not Recognized"	NS-114
	2. Microphone circuit between overhead J/B and multi-display	NS-148
	3. Microphone circuit between multi-display and navigation ECU	NS-150
	4. Steering pad switch circuit	NS-126
	5. Microphone	-
	6. Microphone amplifier	-
	7. Navigation ECU	-
Speed signal does not change in the navigation check mode.	Vehicle speed signal circuit between navigation ECU and combination meter	NS-138
Reverse signal does not change in the navigation check mode.	Reverse Signal Circuit	NS-142

Steering pad switch function

Symptom	Suspected area	See page
The system cannot be operated by the steering pad switch.	1. Steering pad switch circuit	NS-126
	2. Radio receiver	-
	3. Air conditioning amplifier	-
Illumination for steering pad switch does not come on with tail switch on.	1. Illumination circuit	NS-131
	2. Radio receiver	-
	3. Air conditioning amplifier	-

Symptom	Suspected area	See page
Cellular phone registration failure, phone directory transfer failure.	Proceed to "Cellular Phone Registration Failure, Phone Directory Transfer Failure"	NS-117
Cellular phone cannot send / receive.	1. Proceed to "Cellular phone cannot Send / Receive"	NS-119
	2. Steering pad switch circuit	NS-126
	3. Multi-display	-
Cannot call in a certain place.	Proceed to "Cannot call in a Certain Place"	NS-121
The other caller's voice cannot be heard, is too quiet, or distorted.	1. Proceed to "The Other Caller's Voice cannot be Heard, is too Quiet, or Distorted"	NS-122
	2. Multi-display	-
The other caller cannot hear your voice, or your voice is too quiet or distorted.	1. Proceed to "The Other Caller cannot hear your voice, or Your Voice is too Quiet or Distorted"	NS-124
	2. Microphone circuit between overhead J/B and multi-display	NS-148
	3. Microphone	-
	4. Microphone amplifier	-
	5. Multi-display	-

TERMINALS OF ECU

1. CHECK MULTI-DISPLAY

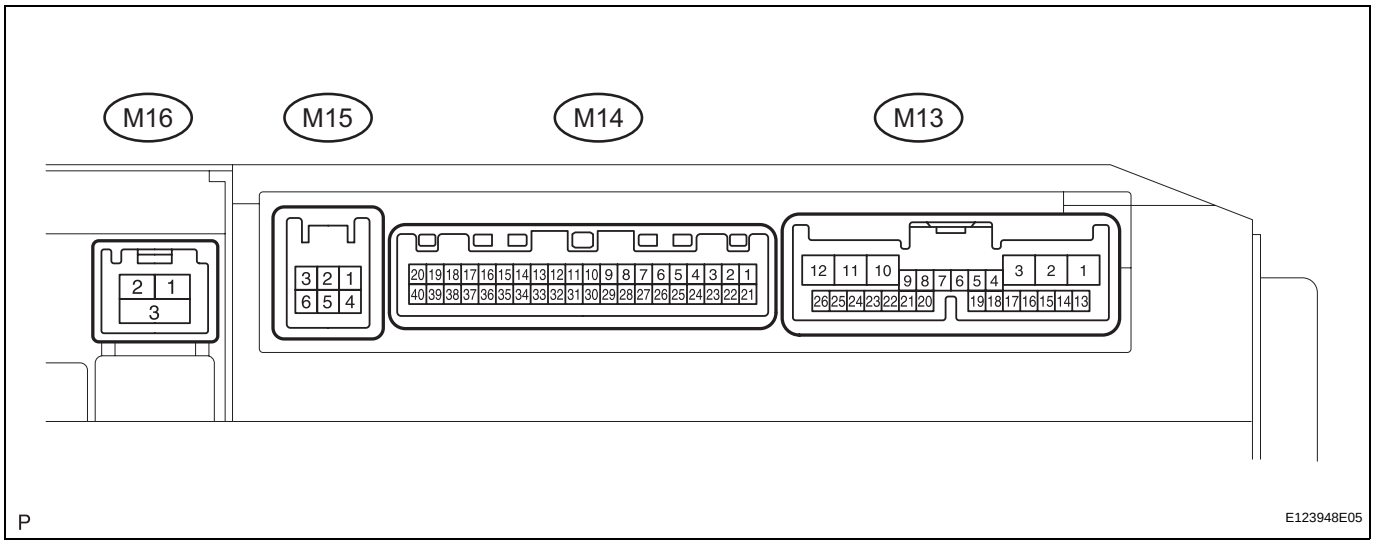

(a) Disconnect the M13 display connector.
(b) Measure the resistance and voltage of the wire harness side connector.

Symbols (Terminal No.)	Wiring Color	Terminal Description	Condition	Specified Condition
GND1 (M13-1) - Body ground	BR - Body ground	Ground	Always	Below 1 Ω
ACC (M13-2) - Body ground	GR - Body ground	ACC power supply	Power switch ON (ACC)	10 to 14 V
IG (M13-10) - Body ground	B - Body ground	IG power supply	Power switch ON (IG)	10 to 14 V
+B1 (M13-3) - Body ground	Y - Body ground	Battery power supply	Always	10 to 14 V

If the results are not as specified, there may be a malfunction on the wire harness side.
(c) Reconnect the M13 display connector.
(d) Measure the voltage of the connector.

Symbols (Terminal No.)	Wiring Color	Terminal Description	Condition	Specified Condition
TSW- (M14-8) - SGND (M14-1)	BR	Shielded ground	Always	Below 1 V
SGND (M14-21) - Body ground	Shielded - Body ground	Shielded ground	Always	Below 1 V
MCO+ (M14-22) - Body ground	R - Body ground	Microphone voice signal	See "Microphone & Voice Recognition Check" mode	-
MCO- (M14-23) - Body ground	G - Body ground	Microphone voice signal	See "Microphone & Voice Recognition Check" mode	-
TX+ (M14-9) - Body ground	W - Body ground	AVC-LAN communication signal	Power switch ON (ACC)	2 to 3 V
TX- (M14-10) - Body ground	R - Body ground	AVC-LAN communication signal	Power switch ON (ACC)	2 to 3 V
TX2+ (M13-18) - Body ground	P - Body ground	AVC-LAN communication signal	Power switch ON (ACC)	2 to 3 V
TX2- (M13-19) - Body ground	W - Body ground	AVC-LAN communication signal	Power switch ON (ACC)	2 to 3 V
TX1+ (M13-4) - Body ground	B - Body ground	AVC-LAN communication signal	Power switch ON (ACC)	2 to 3 V

Symbols (Terminal No.)	Wiring Color	Terminal Description	Condition	Specified Condition
TX1- (M13-5) - Body ground	W - Body ground	AVC-LAN communication signal	Power switch ON (ACC)	2 to 3 V
TX4- (M15-6) - Body ground	P - Body ground	AVC-LAN communication signal	Power switch ON (ACC)	2 to 3 V
TX4+ (M15-3) - Body ground	W - Body ground	AVC-LAN communication signal	Power switch ON (ACC)	2 to 3 V
SLD (M14-24) - Body ground	Shielded - Body ground	Shielded ground	Always	Below 1 V
IVO- (M14-26) - Body ground	R - Body ground	Voice guidance signal	Voice guidance is provided	Waveform synchronized with sound is output
IVO+ (M14-25) - Body ground	G - Body ground	Voice guidance signal	Voice guidance is provided	Waveform synchronized with sound is output
SPD (M13-20) - Body ground	V - Body ground	Speed signal	See "Vehicle Signal Check" mode	-
TC (M13-7) - Body ground	P - Body ground	Diagnosis ON signal	Power switch ON (IG)	9 to 14 V
DR (M13-17) - Body ground	B - Body ground	Illumination signal	Light control switch TAIL or HEAD	2 to 3 V
MIN+ (M14-2) - Body ground	G - Body ground	Microphone voice signal	See "Microphone & Voice Recognition Check" mode	-
MIN- (M14-3) - Body ground	R - Body ground	Microphone voice signal	See "Microphone & Voice Recognition Check" mode	-
MACC (M14-4) - Body ground	BR - Body ground	Microphone amplifier power supply	Power switch ON (IG)	5 V
GVIF (M16-1) - Body ground	B - Body ground	Digital image signal	Multi-display ON	Pulse generation
IVI- (M14-6) - Body ground	W - Body ground	Voice guidance signal	Voice guidance is provided	Waveform synchronized with sound is output
IVI+ (M14-5) - Body ground	B - Body ground	Voice guidance signal	Voice guidance is provided	Waveform synchronized with sound is output

If the result is not as specified, the multi-display may have a malfunction.

2. CHECK NAVIGATION ECU

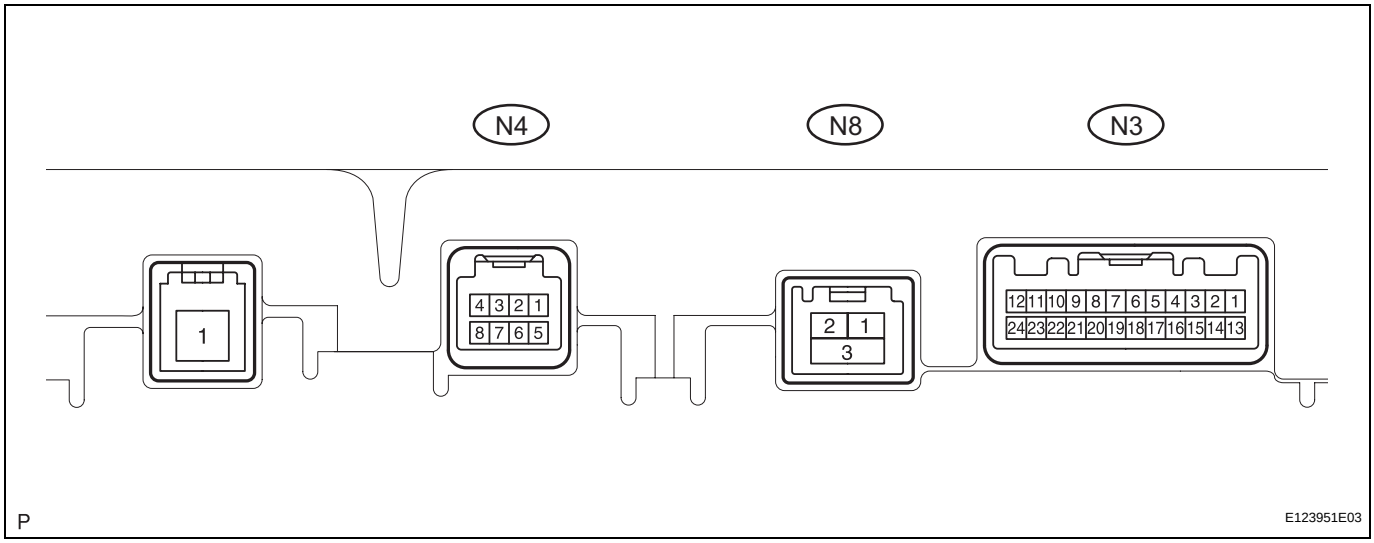

(a) Disconnect the N3 ECU connector.
(b) Measure the resistance and voltage of the wire harness side connector.

Symbols (Terminal No.)	Wiring Color	Terminal Description	Condition	Specified Condition
+B (N3-1) - Body ground	SB - Body ground	Battery power supply	Always	10 to 14 V

Symbols (Terminal No.)	Wiring Color	Terminal Description	Condition	Specified Condition
ACC (N3-13) - Body ground	GR - Body ground	ACC power supply	Power switch ON (ACC)	10 to 14 V
GND1 (N3-15) -Body ground	W-B - Body ground	Ground	Always	Below 1 Ω

If the results are not as specified, there may be a malfunction on the wire harness side.

(c) Reconnect the N3 ECU connector.

(d) Measure the voltage of the connector.

Symbols (Terminal No.)	Wiring Color	Terminal Description	Condition	Specified Condition
SPD (N3-4) - Body ground	V - Body ground	Speed signal	See "Vehicle Signal Check" mode	-
REV (N3-20) - Body ground	R - Body ground	Reverse signal	See "Vehicle Signal Check" mode	-
MIC+ (N4-3) - Body ground	R - Body ground	Microphone voice signal	See "Microphone & Voice Recognition Check" mode	-
MIC- (N4-5) - Body ground	G - Body ground	Microphone voice signal	See "Microphone & Voice Recognition Check" mode	-
TX- (N3-18) - Body ground	P - Body ground	AVC-LAN communication signal	Power switch ON (ACC)	2 to 3 V
TX+ (N3-19) - Body ground	W - Body ground	AVC-LAN communication signal	Power switch ON (ACC)	2 to 3 V
GVIF (N8-1) - Body ground	B - Body ground	Digital image signal	Multi-display ON	Pulse generation
SLD1 (N4-7) - Body ground	Shielded - Body ground	Shielded ground	Always	Below 1 V
VOI- (N3-8) - Body ground	W - Body ground	Voice guidance signal	Voice guidance is provided	Waveform synchronized with sound is output
VOI+ (N3-9) - Body ground	B - Body ground	Voice guidance signal	Voice guidance is provided	Waveform synchronized with sound is output

If the result is not as specified, the ECU may have a malfunction.

3. CHECK RADIO RECEIVER (See page AV-31)

4. CHECK STEREO COMPONENT AMPLIFIER (See page AV-31)

5. CHECK TELEVISION CAMERA (See page PM-8) (w/ Rear View Monitor System)

6. CHECK GATEWAY ECU (See page AV-31)

DTC CHECK / CLEAR

HINT:

- Illustrations may differ from the actual vehicle depending on the device settings and options. Therefore, some detailed areas may not be exactly the same as on the actual vehicle.
- If the system cannot enter the diagnostic mode, inspect all AVC-LAN communication components and repair or replace problem parts.
  (see page NS-136)
- After the power switch is turned ON (IG), check that the map is displayed before starting the diagnostic mode. Otherwise, some items cannot be checked.

1. START DIAGNOSTIC MODE

(a) There are 2 methods to start diagnostic mode. Start the mode by using one of them.

(b) Method 1

(1) Start the hybrid system.

(2) While pressing and holding the "INFO" switch, operate the light control switch: OFF → Turn ON → Turn OFF → Turn ON → Turn OFF → Turn ON → Turn OFF.

(3) The diagnostic mode starts and the "System Check Mode" screen will be displayed. Service inspection starts automatically and the result will be displayed.

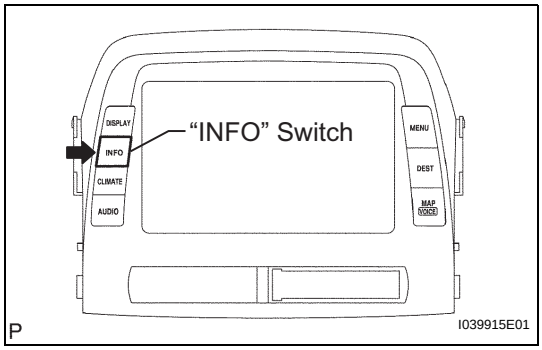

(c) Method 2

(1) Start the hybrid system.

(2) Press the "DISPLAY" switch.

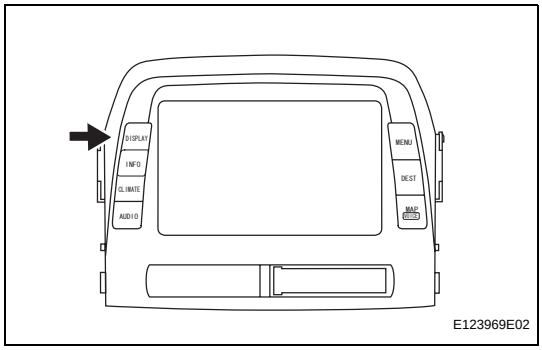

(3) From the display quality adjustment screen, touch the corners of the screen in the following order: upper left → lower left → upper left → lower left → upper left → lower left.

(4) The diagnostic mode starts and the "System Check Mode" screen will be displayed. Service inspection starts automatically and the result will be displayed.

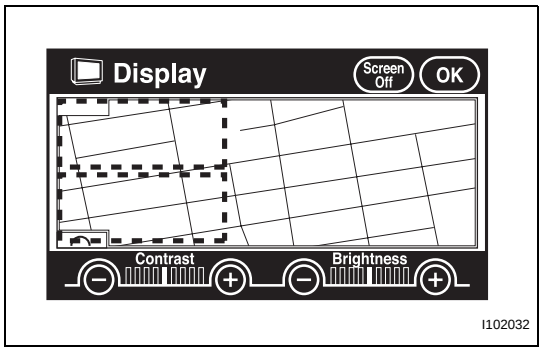

2. FINISH DIAGNOSTIC MODE

(a) There are 2 methods to end diagnostic mode. Use one of them.

(1) Turn the power switch OFF.

(2) Press and hold the "DISP" switch for 3 seconds.

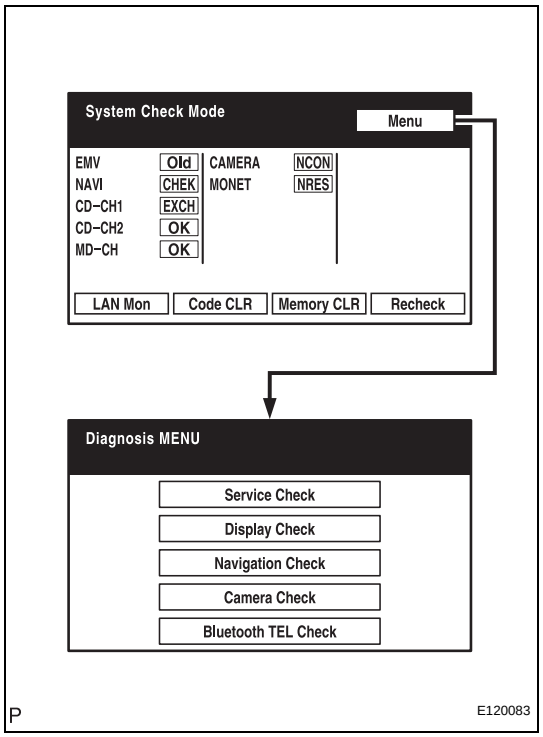

3. DIAGNOSIS MENU

(a) The "Diagnosis MENU" screen will be displayed by pressing the menu switch on the "System Check Mode" screen.

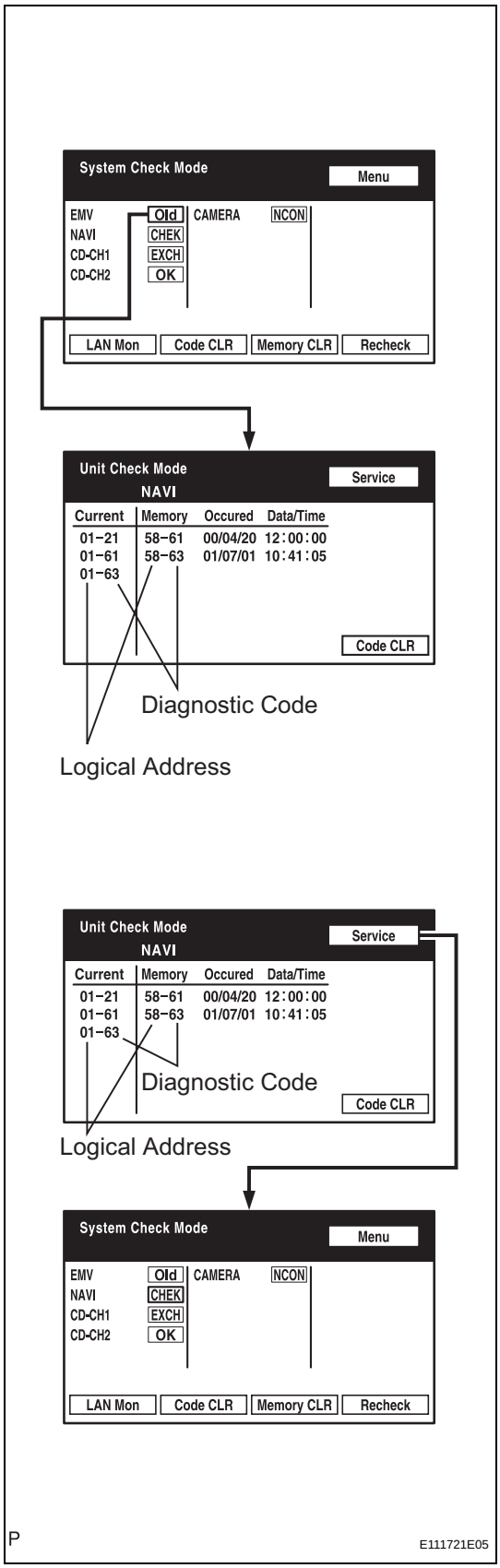

4. CHECK DTC

(a) Read the system check result.

(1) If the check result is "EXCH", "CHEK" or "Old", touch the displayed check result to view the results on the "Unit Check Mode" screen and record them.

HINT:

- If all check results are "OK", go to the communication DTC check.
- If a device name is not known, its physical address is displayed.

HINT:

When proceeding to view the results of another device, press the service switch to return to the "System Check Mode" screen. Repeat this step.

NS

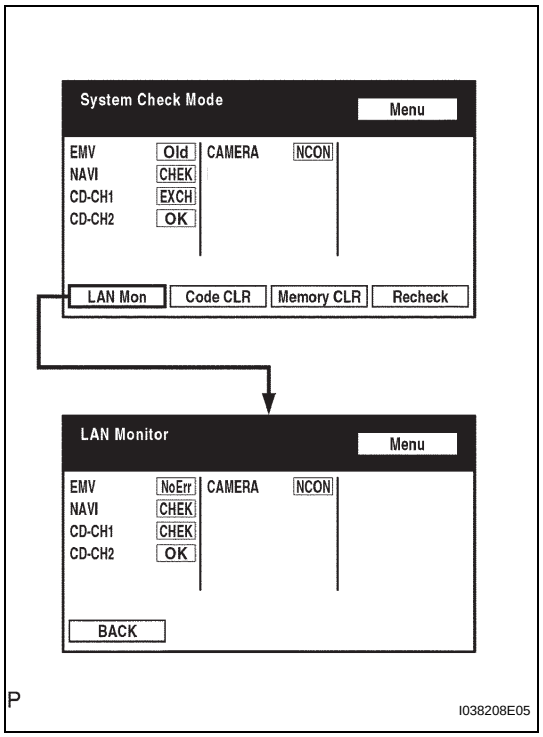

(b) Read the communication diagnostic check result.
(1) Return to the "System Check Mode" screen, and press the "LAN Mon" switch to enter the "LAN Monitor" screen.

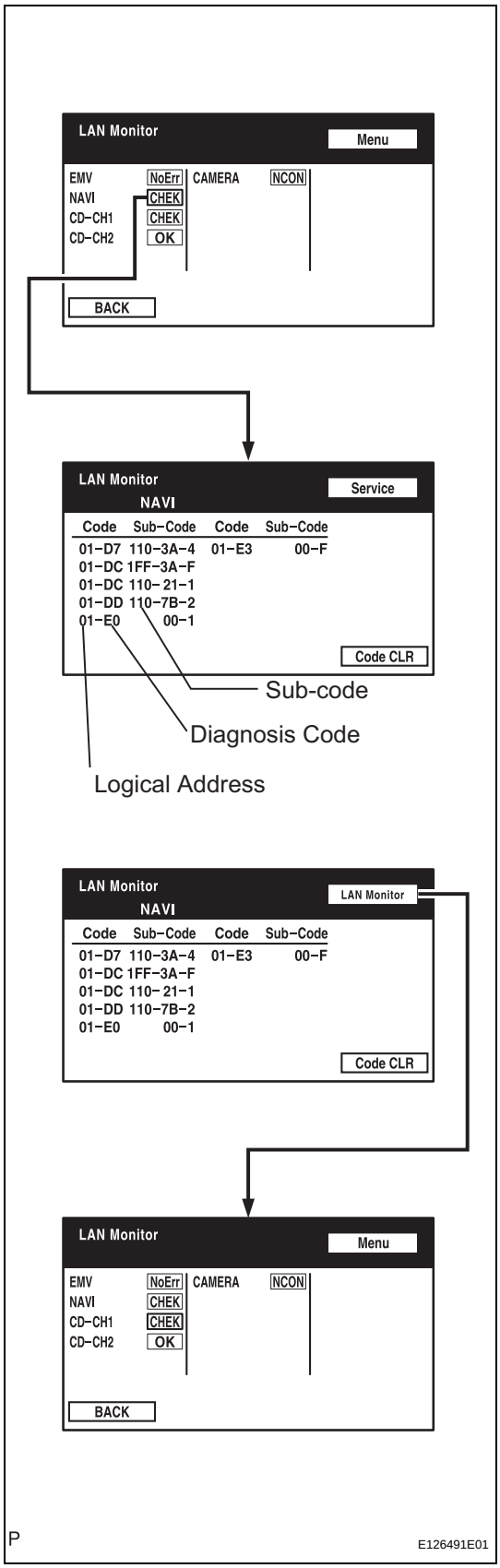

(2) If the check result is "CHEK" or "Old", touch the displayed check result to view the results on the individual communication diagnostic screen and record them.
HINT:
- If all check results are "No Err", the system judges that no DTC exists.
- The sub-code (relevant device) will be indicated by its physical address.
- When proceeding to view the results of another device, press the "Service" switch to return to the original "LAN Monitor" screen. Repeat this step.

NS

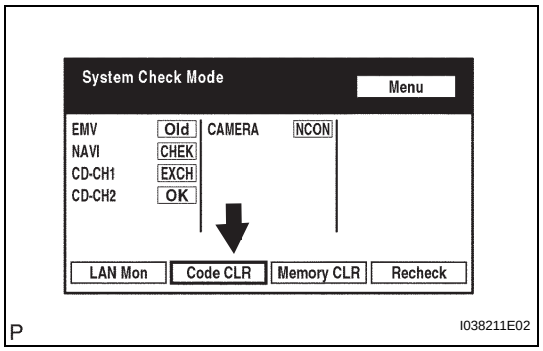

5. DTC CLEAR/RECHECK

(a) Clear DTC

(1) Press the "Code CLR" switch for 3 seconds.

(2) The check results are cleared.

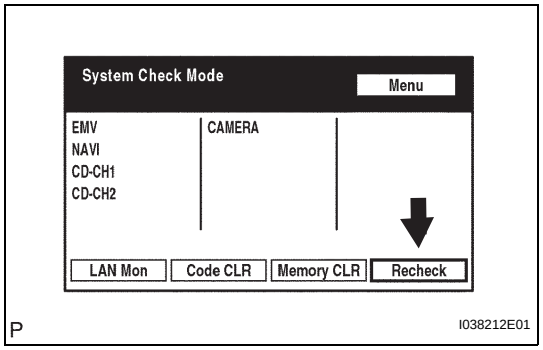

(b) Recheck

(1) Press the "Recheck" switch.

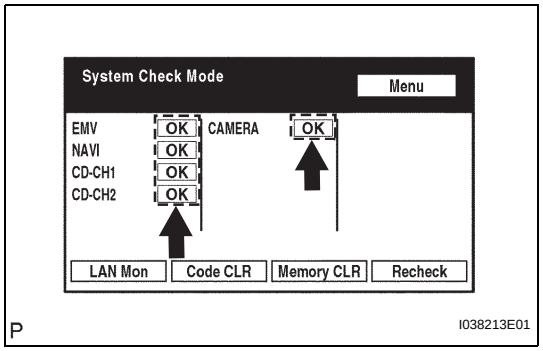

(2) Confirm that all diagnostic codes are "OK" when the check results are displayed. If a code other than "OK" is displayed, troubleshoot again.

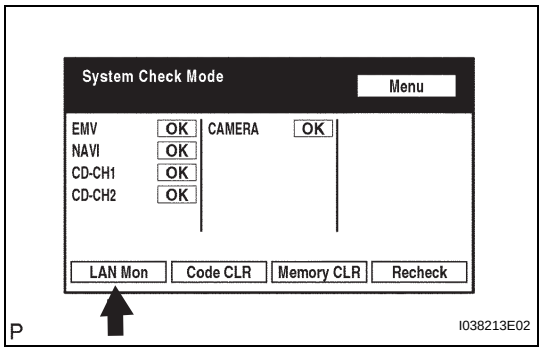

(3) Press the "LAN Mon" switch to change to the "LAN Monitor" screen.

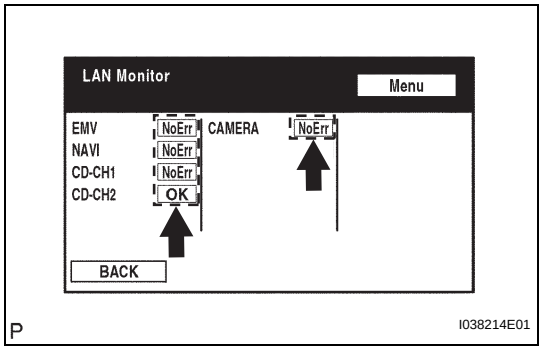

(4) Confirm that all diagnostic codes are "No Err". If a code other than "No Err" is displayed, troubleshoot again.

NS

DIAGNOSTIC TROUBLE CODE CHART

DTC No.	Detection Item	Trouble Area	See page
01-21	ROM Error	Multi-display	NS-52
01-22	RAM Error	Multi-display	NS-52
01-D5	Absence of Registration Unit	1. Power source circuit of component shown by sub-code 2. AVC-LAN circuit between multi-display and component shown by sub-code 3. Component shown by sub-code	NS-53
01-D6	No Master	1. Multi-display power source circuit 2. Power source circuit of component which has stored this code 3. AVC-LAN circuit between multi-display and component which has stored this code 4. Component which has stored this code 5. Multi-display	NS-55
01-D7	Connection Check Error	1. Multi-display power source circuit 2. Power source circuit of component which has stored this code 3. AVC-LAN circuit between multi-display and component which has stored this code 4. Component which has stored this code 5. Multi-display	NS-55
01-D8	No Response for Connection Check	1. Power source circuit of component shown by sub-code 2. AVC-LAN circuit between multi-display and component shown by sub-code 3. Component shown by sub-code	NS-53
01-D9	Last Mode Error	1. Power source circuit of component shown by sub-code 2. AVC-LAN circuit between multi-display and component shown by sub-code 3. Component shown by sub-code	NS-53
01-DA	No Response Against ON / OFF Command	1. Power source circuit of component shown by sub-code 2. AVC-LAN circuit between multi-display and component shown by sub-code 3. Component shown by sub-code	NS-53
01-DB	Mode Status Error	1. Power source circuit of component shown by sub-code 2. AVC-LAN circuit between multi-display and component shown by sub-code 3. Component shown by sub-code	NS-53

DTC No.	Detection Item	Trouble Area	See page
01-DC	Transmission Error	If same sub-code is recorded in other components, check harness for power supply and communication system of all components shown by code	NS-59
01-DD	Master Reset	1. Multi-display power source circuit 2. AVC-LAN circuit between multi-display and component which has stored this code 3. Multi-display 4. Component which has stored this code	NS-62
01-DE	Slave Reset	1. Power source circuit of component shown by sub-code 2. AVC-LAN circuit between multi-display and component shown by sub-code 3. Component shown by sub-code	NS-53
01-DF	Master Error	1. Multi-display power source circuit 2. AVC-LAN circuit between multi-display and component which has stored this code 3. AVC-LAN circuit between multi-display and radio receiver 4. Multi-display 5. Component which has stored this code	NS-66
01-E0	Registration Complete Indication Error	-	NS-71
01-E1	Voice Processing Device ON Error	1. Multi-display power source circuit 2. AVC-LAN circuit between multi-display and component which has stored this code 3. Multi-display 4. Component which has stored this code	NS-62
01-E2	ON / OFF Indication Parameter Error	Multi-display	NS-72
01-E3	Registration Demand Transmission	-	NS-71
01-E4	Multiple Frame Incomplete	-	NS-71
21-10	Panel Switch Error	Multi-display	NS-73
21-11	Touch Switch Error	Multi-display	NS-73
23-10	Panel Switch Error	Multi-display	NS-73
23-11	Touch Switch Error	Multi-display	NS-73
24-10	Panel Switch Error	Multi-display	NS-73
24-11	Touch Switch Error	Multi-display	NS-73
25-10	Panel Switch Error	Multi-display	NS-73
25-11	Touch Switch Error	Multi-display	NS-73
34-10	Error in Picture Circuit	Multi-display	NS-74
34-11	No Current in Back-light Error	Multi-display	NS-74
34-12	Excess Current in Back-light Error	Multi-display	NS-74
57-47	Bluetooth Module Initialization Failed	Multi-display	NS-75
58-10	Gyro Error	1. Gyro sensor 2. Navigation ECU	NS-76

DTC No.	Detection Item	Trouble Area	See page
58-11	GPS Receiver Error	Navigation ECU	NS-78
58-40	GPS Antenna Error	1. Wire harness 2. GPS antenna 3. Navigation ECU	NS-79
58-41	GPS Antenna Power Source Error	1. Wire harness 2. GPS antenna 3. Navigation ECU	NS-79
58-42	Map Disc Read Error	1. Map disc 2. Navigation ECU	NS-80
58-43	SPD Signal Error	1. Speed signal circuit 2. Navigation ECU	NS-82
58-44	Player Error	Navigation ECU	NS-83
58-45	High Temperature	Navigation ECU	NS-84
5C-40	Camera Picture Error	1. Wire harness 2. Television camera assembly 3. Multi-display	NS-85
80-10	Gyro Error	1. Gyro sensor 2. Navigation ECU	NS-76
80-11	GPS Receiver Error	Navigation ECU	NS-78
80-40	GPS Antenna Error	1. Wire harness 2. GPS antenna 3. Navigation ECU	NS-79
80-41	GPS Antenna Power Source Error	1. Wire harness 2. GPS antenna 3. Navigation ECU	NS-79
80-42	Map Disc Read Error	1. Map disc 2. Navigation ECU	NS-80
80-43	SPD Signal Error	1. Speed signal circuit 2. Navigation ECU	NS-82
80-44	Player Error	Navigation ECU	NS-83
80-45	High Temperature	Navigation ECU	NS-84

DTC	01-21	ROM Error

DTC	01-22	RAM Error

DESCRIPTION

DTC No.	DTC Detection Condition	Trouble Area
01-21	Malfunction exists in ROM.	Multi-display
01-22	Malfunction exists in RAM.	

INSPECTION PROCEDURE

HINT:
After the inspection is completed, clear the DTCs.

1	REPLACE MULTI-DISPLAY

NEXT

END

DTC	01-D5	Absence of Registration Unit

DTC	01-D8	No Response for Connection Check

DTC	01-D9	Last Mode Error

DTC	01-DA	No Response Against ON / OFF Command

DTC	01-DB	Mode Status Error

DTC	01-DE	Slave Reset

DESCRIPTION

DTC No.	DTC Detection Condition	Trouble Area
01-D5*1, *3	**When either condition below is met:** • Component shown by sub-code is (was) disconnected from system when turning power switch on (ACC or IG). • Communication condition with device that code shows cannot be obtained when hybrid system starts.	• Power source circuit of component shown by sub-code • AVC-LAN circuit between multi-display and component shown by sub-code • Component shown by sub-code
01-D8*2, *3	Component shown by sub-code is (was) disconnected from system after hybrid system start.	
01-D9*1, *3	Device that had functioned before the hybrid system stopped is (was) disconnected from system when power switch is (was) ON (IG or ACC).	
01-DA*3	**When either condition below is met:** • No response is identified when changing mode. • Sound and image do not change by switch operation.	
01-DB*1, *3	Dual alarm is detected.	
01-DE*3	Slave device has been disconnected after hybrid system start.	

NS

HINT:
- *1: Even if no fault is present, this trouble code may be stored depending on the battery condition or hybrid system start voltage.
- *2: If the power connector is disconnected after the hybrid system starts, this code is stored after 180 seconds.
- *3: If it is reported that the device does not exist during verification, check the power source circuit and AVC-LAN circuit for the device.

NOTICE:
- **Before starting troubleshooting, be sure to clear DTCs to erase codes stored due to the reasons described in the HINT above. Then, check for DTCs and troubleshoot according to the output DTCs.**
- **The multi-display is the master unit.**
- **Be sure to clear and recheck DTCs after the inspection is completed to confirm that no DTCs are output.**

INSPECTION PROCEDURE

NOTICE:

Be sure to read DESCRIPTION before performing the following procedures.

1	**CHECK "MULTI-DISPLAY COMMUNICATION ERROR" IN FLOWCHART**

(a) Refer to the multi-display communication error (see page NS-161).

NEXT

END

DTC	01-D6	No Master

DTC	01-D7	Connection Check Error

DESCRIPTION

DTC No.	DTC Detection Condition	Trouble Area
01-D6*1	**When either of the following conditions is met:** • The component which has stored the code has (had) been disconnected when the power switch is ON (ACC or IG). • The master device has (had) been disconnected when this code is stored.	• Multi-display power source circuit • Power source circuit of the component which has stored this code • AVC-LAN circuit between the multi-display and the component which has stored this code • Component which has stored this code • Multi-display
01-D7*2	**When either of the following conditions is met:** • The component which has stored the code has (had) been disconnected after the hybrid system starts (started). • The master device has (had) been disconnected when this code is (was) stored.	

HINT:
- *1: Even if no fault is present, this trouble code may be stored depending on the battery condition or hybrid system start voltage.
- *2: When 210 seconds have elapsed after disconnecting the power supply connector of the master component with the power switch ON (ACC or IG), this code is stored.

NS

NOTICE:
- **Before starting troubleshooting, be sure to clear DTCs to erase codes stored due to the reasons described in the HINT above. Then, check for DTCs and troubleshoot according to the output DTCs.**
- **The multi-display is the master unit.**
- **Be sure to clear and recheck DTCs after the inspection is completed to confirm that no DTCs are output.**

INSPECTION PROCEDURE

NOTICE:
Be sure to read DESCRIPTION before performing the following procedures.

1	CHECK MULTI-DISPLAY POWER SOURCE CIRCUIT

(a) Refer to the multi-display power source circuit (see page NS-167).
If the power source circuit is operating normally, proceed to the next step.

NEXT

2 IDENTIFY COMPONENT WHICH HAS STORED THIS CODE

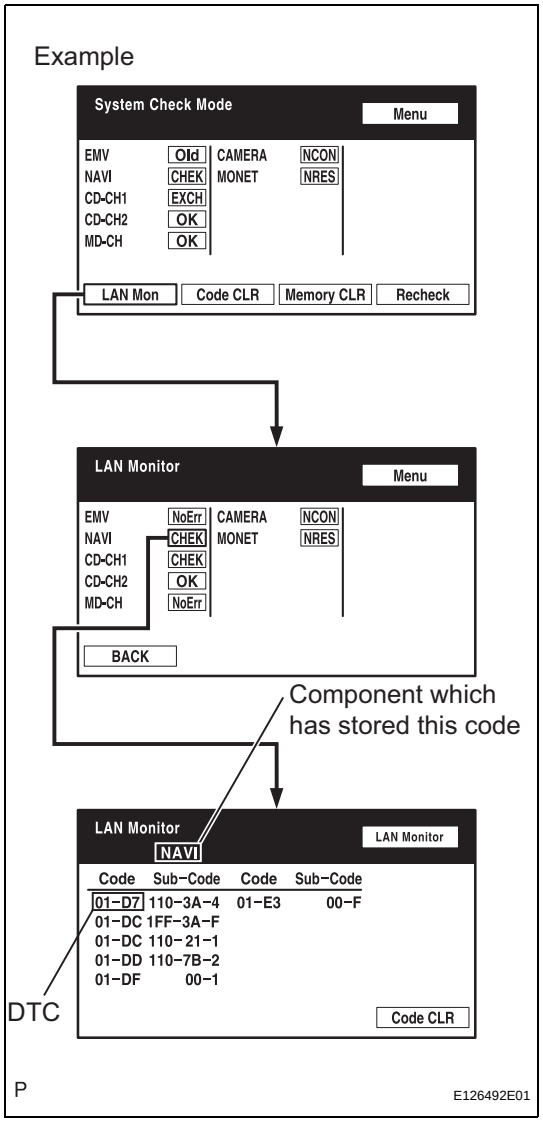

(a) Enter the diagnostic mode.
(b) Press the "LAN Mon" switch to change to "LAN Monitor" mode.
(c) Identify the component which has stored this code.
Component table:

Display	Component
AUDIO H/U	Radio receiver
DSP-AMP	Stereo component amplifier
G/W	Gateway ECU
NAVI	Navigation ECU
CAMERA	Intelligent parking assist ECU

HINT:
"NAVI" is the component which has stored this code in the example shown in the illustration.

NS

NEXT

3 CHECK POWER SOURCE CIRCUIT OF COMPONENT WHICH HAS STORED THIS CODE

(a) Inspect the power source circuit of the component which has stored this code.
If the power source circuit is operating normally, proceed to the next step.

Component table:

Component	Proceed to
Radio receiver (AUDIO H/U)	Radio receiver power source circuit (see page AV-171)
Stereo component amplifier (DSP-AMP)	Stereo component amplifier power source circuit (see page AV-173)
Gateway ECU (G/W)	Gateway ECU power source circuit (see page AV-177)
Navigation ECU (NAVI)	Navigation ECU power source circuit (see page NS-169)

NEXT

4	INSPECT RADIO RECEIVER

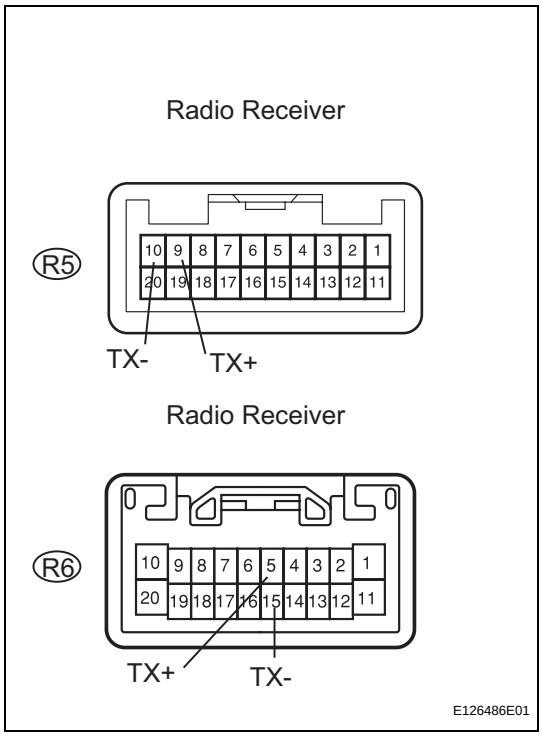

(a) Disconnect the R5 and R6 receiver connectors.
(b) Measure the resistance of the receiver.
Standard resistance

Tester Connection	Specified Condition
R6-5 (TX+) - R6-15 (TX-)	60 to 80 Ω
R5-9 (TX+) - R5-10 (TX-)	60 to 80 Ω

NG → **REPLACE RADIO RECEIVER ASSEMBLY**

OK

5	CHECK WIRE HARNESS (MULTI-DISPLAY - COMPONENT WHICH HAS STORED THIS CODE)

HINT:
For details of the connectors, refer to "TERMINALS OF ECU" (see page NS-40).

(a) Referring to the AVC-LAN wiring diagram below, check the AVC-LAN circuit between the multi-display and the component which has stored this code.
  (1) Disconnect all connectors between the multi-display and the component which has stored this code.
  (2) Check for an open or short in the AVC-LAN circuit between the multi-display and the component which has stored this code.
  OK:
  There is no open or short circuit.

NS

AVC-LAN Wiring Diagram

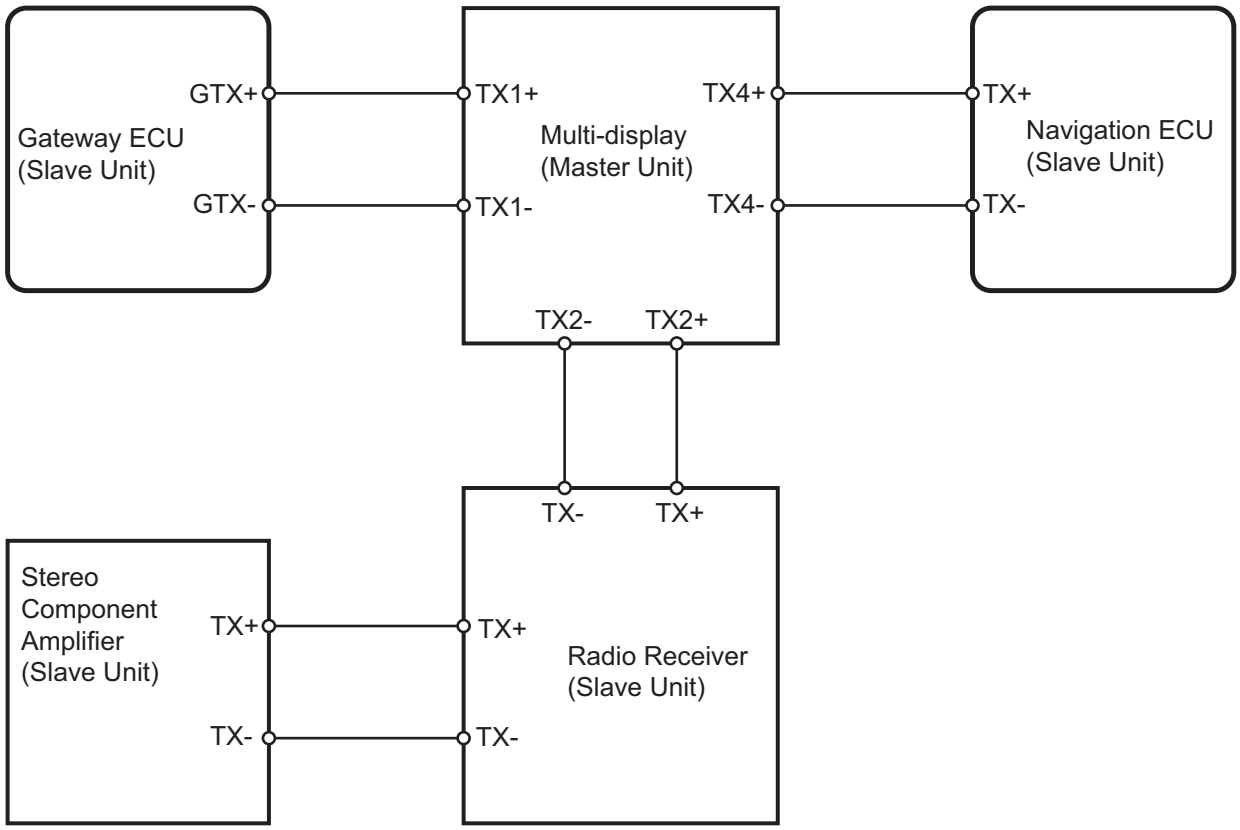

N E126411E03

NG → **REPAIR OR REPLACE HARNESS AND CONNECTOR**

OK

6	REPLACE COMPONENT WHICH HAS STORED THIS CODE

(a) Replace the component which has stored this code with a normal one and check if the same problem occurs again.
OK:
Same problem does not occur.

NG → **REPLACE MULTI-DISPLAY**

OK

END

NS

DTC 01-DC Transmission Error

DESCRIPTION

DTC No.	DTC Detection Condition	Trouble Area
01-DC	Transmission to component shown by sub-code failed. (Detecting this DTC does not always mean actual failure.)	If same sub-code is recorded in other components, check harness for power supply and communication system of all components shown by code

NOTICE:
- **The multi-display is the master unit.**
- **Be sure to clear and recheck DTCs after the inspection is completed to confirm that no DTCs are output.**

INSPECTION PROCEDURE

NOTICE:
Be sure to read DESCRIPTION before performing the following procedures.

1 CHECK FOR DTC OF OTHER COMPONENTS

(a) Check if the component shown by the sub-code is displayed in the check result of the other components.
(1) Check if "01-DC" is output for the other components.
(2) If "01-DC" is output for any other components, check if the same physical address is displayed.
HINT:
For the list of the components shown by sub-codes, refer to the table in the next step.
Result

Result	Proceed to
"01-DC" is output and the same physical address is displayed	**A**
"01-DC" is not output or the same physical address is not displayed	**B**

B → **Go to step 4**

A

NS

2 IDENTIFY COMPONENT WHICH HAS STORED THIS CODE

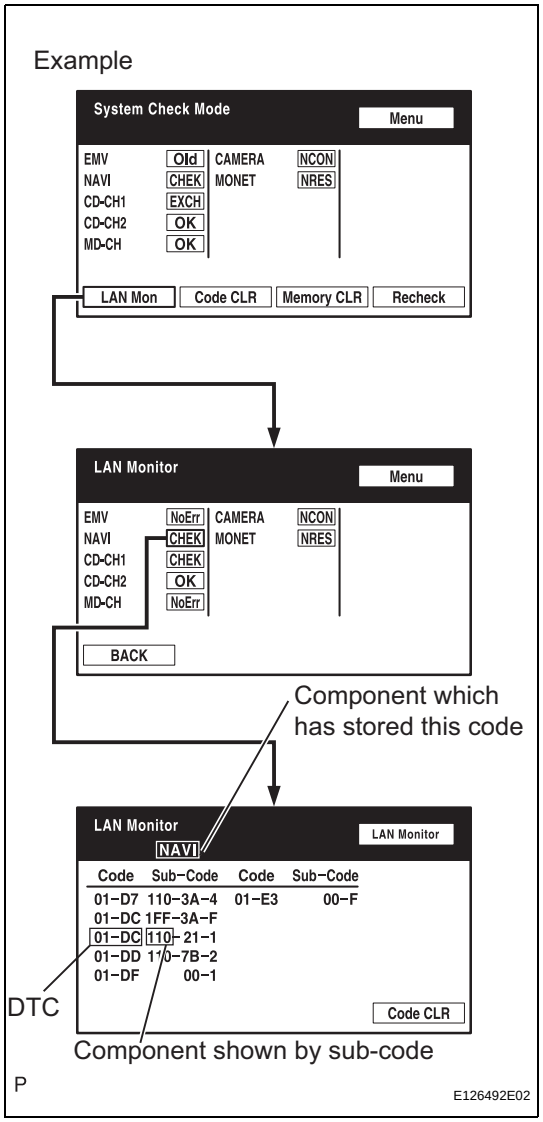

(a) Enter the diagnostic mode.
(b) Press the "LAN Mon" switch to change to "LAN Monitor" mode.
(c) Identify the component which has stored this code.

Component table:

Display	Component
AUDIO H/U	Radio receiver
DSP-AMP	Stereo component amplifier
G/W	Gateway ECU
NAVI	Navigation ECU
EMV	Multi-display

HINT:
"NAVI" is the component which has stored this code in the example shown in the illustration.

NS

NEXT

3 CHECK COMPONENT WHICH HAS STORED THIS CODE

(a) Select the component which has stored this code.

Component table:

Component	Proceed to
Gateway ECU (G/W)	Gateway ECU communication error (see page NS-152)
Radio receiver (AUDIO H/U)	Radio receiver communication error (see page NS-155)
Stereo component amplifier (DSP-AMP)	Stereo component amplifier communication error (see page NS-158)
Navigation ECU (NAVI)	Navigation ECU communication error (see page NS-164)
Multi-display (EMV)	Multi-display communication error (see page NS-161)

NEXT

END

4	CLEAR DTC

(a) Clear the DTCs (see page NS-43).
HINT:
If "01-DC" is output for only one component, this may not indicate a malfunction.

NEXT

5	RECHECK DTC

(a) Recheck for DTCs and check if the same trouble occurs again.
OK:
Malfunction disappears.

NG → **Go to step 3**

NS

OK

END

DTC	01-DD	Master Reset

DTC	01-E1	Voice Processing Device ON Error

DESCRIPTION

DTC No.	DTC Detection Condition	Trouble Area
01-DD	Device that should be master has been disconnected after hybrid system starts.	• Multi-display power source circuit • AVC-LAN circuit between multi-display and component which has stored this code • Multi-display • Component which has stored this code
01-E1*	Amplifier device records that amplifier output does not function even while source device is operating.	

HINT:
*: Even if no fault is present, this trouble code may be stored depending on the battery condition or hybrid system start voltage.

NOTICE:

- **Before starting troubleshooting, be sure to clear DTCs to erase codes stored due to the reasons described in the HINT above. Then, check for DTCs and troubleshoot according to the output DTCs.**
- **The multi-display is the master unit.**
- **Be sure to clear and recheck DTCs after the inspection is completed to confirm that no DTCs are output.**

NS

INSPECTION PROCEDURE

NOTICE:

Be sure to read DESCRIPTION before performing the following procedures.

1	CHECK MULTI-DISPLAY POWER SOURCE CIRCUIT

(a) Refer to the multi-display power source circuit (see page NS-167).
If the power source circuit is operating normally, proceed to the next step.

NEXT

2 INSPECT RADIO RECEIVER

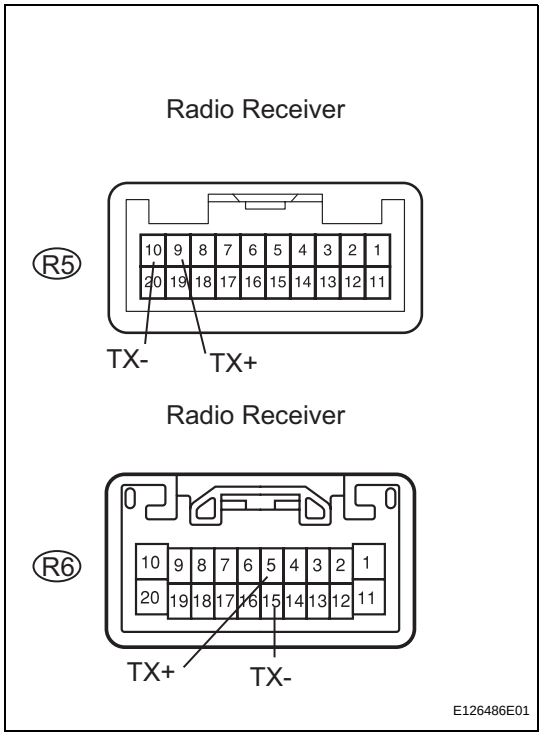

(a) Disconnect the R5 and R6 receiver connectors.
(b) Measure the resistance of the receiver.
Standard resistance

Tester Connection	Specified Condition
R5-9 (TX+) - R5-10 (TX-)	60 to 80 Ω
R6-5 (TX+) - R6-15 (TX-)	60 to 80 Ω

NG → **REPLACE RADIO RECEIVER ASSEMBLY**

OK

NS

3 IDENTIFY COMPONENT WHICH HAS STORED THIS CODE

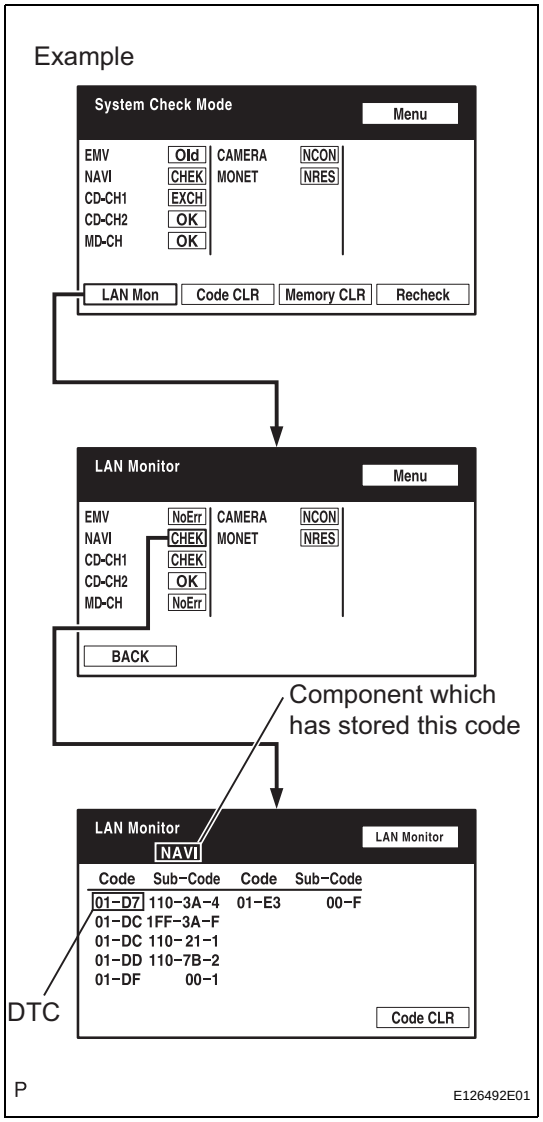

(a) Enter the diagnostic mode.
(b) Press the "LAN Mon" switch to change to "LAN Monitor" mode.
(c) Identify the component which has stored this code.
Component table:

Display	Component
AUDIO H/U	Radio receiver
DSP-AMP	Stereo component amplifier
G/W	Gateway ECU
NAVI	Navigation ECU

HINT:
"NAVI" is the component which has stored this code in the example shown in the illustration.

NS

NEXT

4 CHECK WIRE HARNESS (MULTI-DISPLAY - COMPONENT WHICH HAS STORED THIS CODE)

HINT:
For details of the connectors, refer to "TERMINALS OF ECU" (see page NS-40).

(a) Referring to the AVC-LAN wiring diagram below, check the AVC-LAN circuit between the multi-display and the component which has stored this code.
  (1) Disconnect all connectors between the multi-display and the component which has stored this code.
  (2) Check for an open or short in the AVC-LAN circuit between the multi-display and the component which has stored this code.

OK:
There is no open or short circuit.

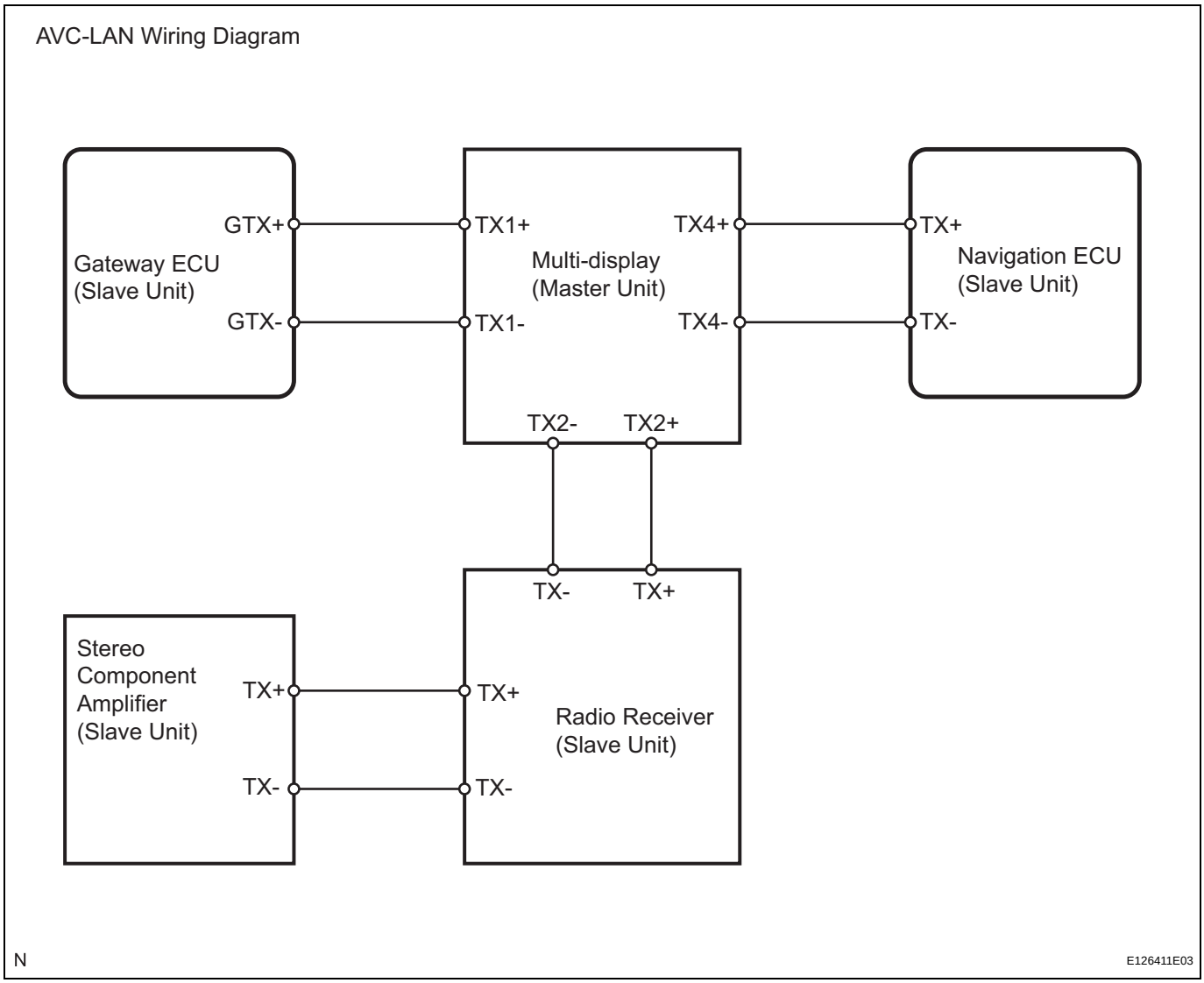

NG → **REPAIR OR REPLACE HARNESS AND CONNECTOR**

OK

5	**REPLACE MULTI-DISPLAY**

(a) Replace the multi-display with a normal one and check if the same problem occurs again.
OK:
Same problem does not occur.

NG → **REPLACE COMPONENT WHICH HAS STORED THIS CODE**

OK

END

NS

DTC	01-DF	Master Error

DESCRIPTION

DTC No.	DTC Detection Condition	Trouble Area
01-DF*	**When either condition below is met:** • Device with a display fails and master is switched to the audio device. • Communication error between sub-master (radio receiver) and master occurs.	• Multi-display power source circuit • AVC-LAN circuit between multi-display and component which has stored this code • AVC-LAN circuit between multi-display and radio receiver • Multi-display • Component which has stored this code

HINT:
*: When 210 seconds have elapsed after disconnecting the power supply connector of the master component with the power switch ON (ACC or IG), this code is stored.

NOTICE:

- **Before starting troubleshooting, be sure to clear DTCs to erase codes stored due to the reasons described in the HINT above. Then, check for DTCs and troubleshoot according to the output DTCs.**
- **The multi-display is the master unit.**
- **Be sure to clear and recheck DTCs after the inspection is completed to confirm that no DTCs are output.**

INSPECTION PROCEDURE

NOTICE:

Be sure to read DESCRIPTION before performing the following procedures.

NS

1	CHECK MULTI-DISPLAY POWER SOURCE CIRCUIT

(a) Refer to the multi-display power source circuit (see page NS-167).
If the power source circuit is operating normally, proceed to the next step.

NEXT

2 INSPECT RADIO RECEIVER

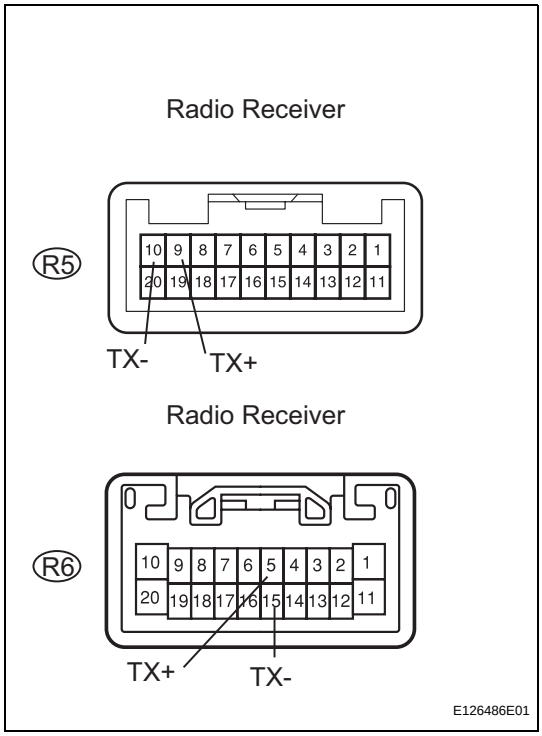

(a) Disconnect the R5 and R6 receiver connectors.
(b) Measure the resistance of the receiver.

Standard resistance

Tester Connection	Specified Condition
R5-9 (TX+) - R5-10 (TX-)	60 to 80 Ω
R6-5 (TX+) - R6-15 (TX-)	60 to 80 Ω

NG → **REPLACE RADIO RECEIVER ASSEMBLY**

OK

NS

3 IDENTIFY COMPONENT WHICH HAS STORED THIS CODE

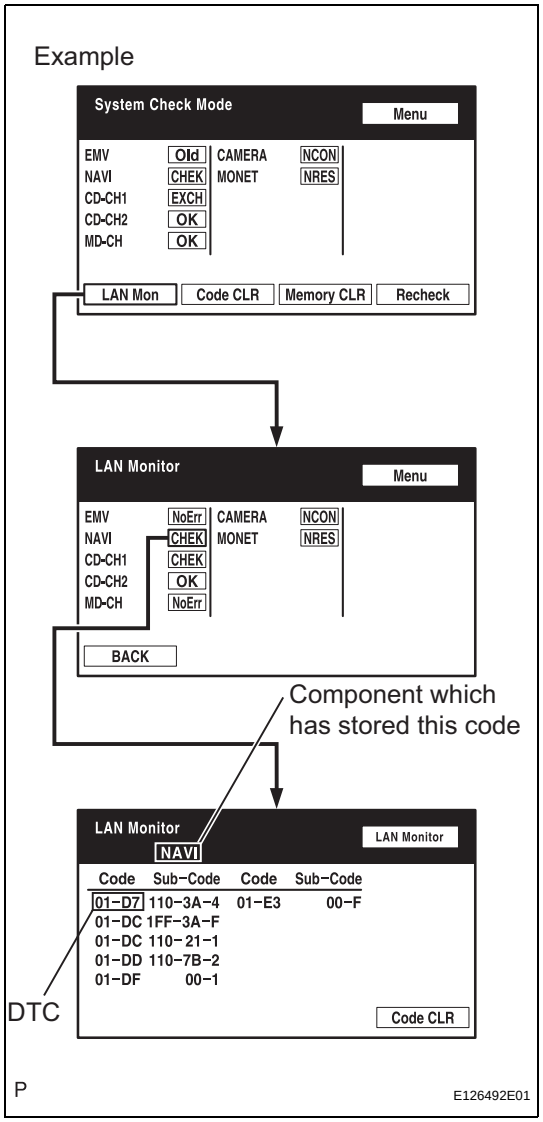

(a) Enter the diagnostic mode.
(b) Press the "LAN Mon" switch to change to "LAN Monitor" mode.
(c) Identify the component which has stored this code.
Component table:

Display	Component
AUDIO H/U	Radio receiver
DSP-AMP	Stereo component amplifier
G/W	Gateway ECU
NAVI	Navigation ECU

HINT:
"NAVI" is the component which has stored this code in the example shown in the illustration.

NS

NEXT

4 CHECK WIRE HARNESS (MULTI-DISPLAY - COMPONENT WHICH HAS STORED THIS CODE)

HINT:
For details of the connectors, refer to "TERMINALS OF ECU" (see page NS-40).

(a) Referring to the AVC-LAN wiring diagram below, check the AVC-LAN circuit between the multi-display and the component which has stored this code.
  (1) Disconnect all connectors between the multi-display and the component which has stored this code.
  (2) Check for an open or short in the AVC-LAN circuit between the multi-display and the component which has stored this code.

OK:
There is no open or short circuit.

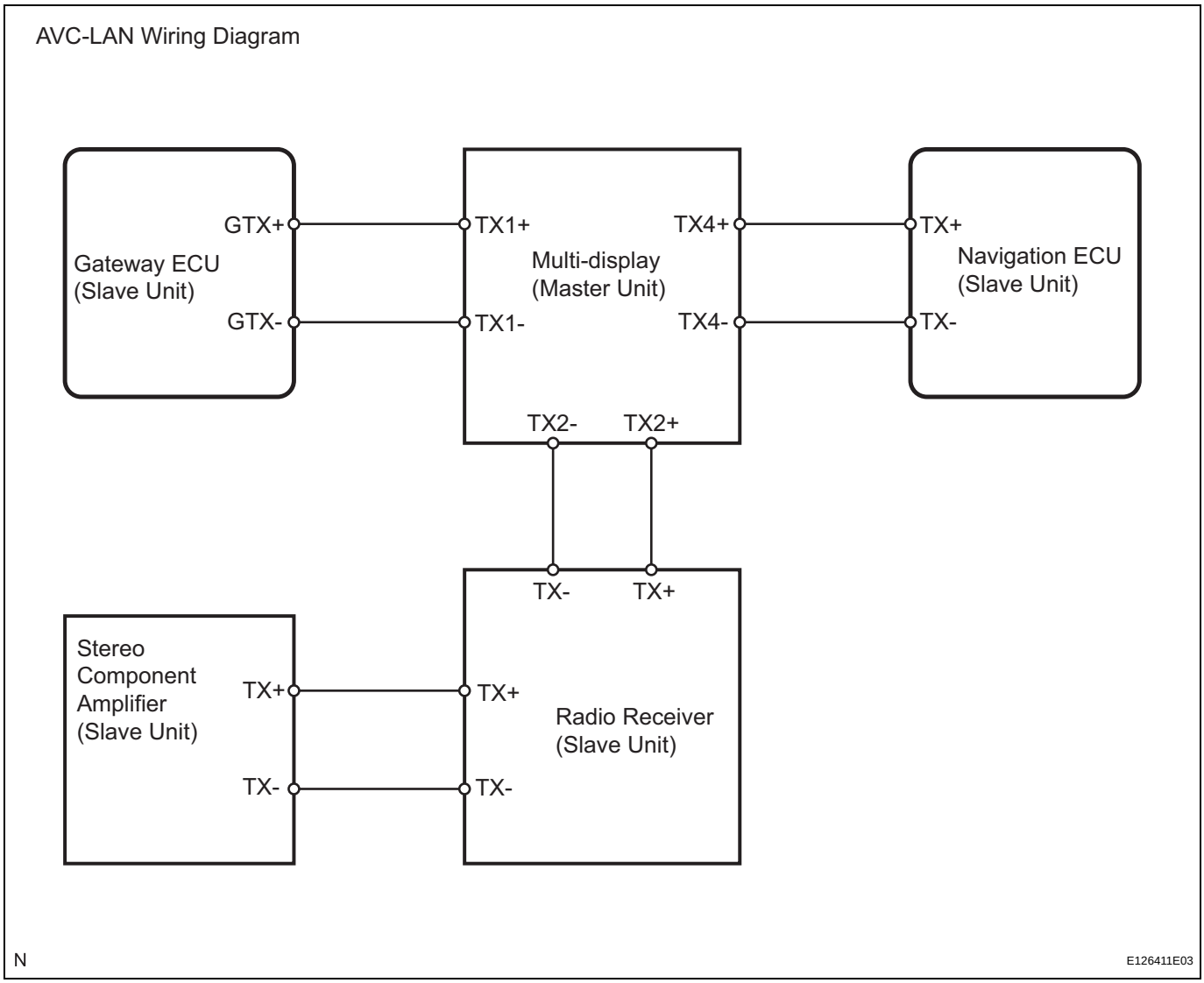

NG → **REPAIR OR REPLACE HARNESS AND CONNECTOR**

OK

5	CHECK WIRE HARNESS (MULTI-DISPLAY - RADIO RECEIVER)

HINT:
For details of the connectors, refer to "TERMINALS OF ECU" (see page NS-40).

(a) Referring to the AVC-LAN wiring diagram below, check the AVC-LAN circuit between the multi-display and the radio receiver.
  (1) Disconnect all connectors between the multi-display and the radio receiver.
  (2) Check for an open or short in the AVC-LAN circuit between the multi-display and the radio receiver.

NS

OK:
There is no open or short circuit.

NG → **REPAIR OR REPLACE HARNESS AND CONNECTOR**

OK

NS

6	REPLACE MULTI-DISPLAY

(a) Replace the multi-display with a normal one and check if the same problem occurs again.
OK:
Same problem does not occur.

NG → **REPLACE COMPONENT WHICH HAS STORED THIS CODE**

OK

END

DTC	01-E0	Registration Complete Indication Error

DTC	01-E3	Registration Demand Transmission

DTC	01-E4	Multiple Frame Incomplete

DESCRIPTION

DTC No.	DTC Detection Condition	Trouble Area
01-E0	"Registration complete" signal from master device cannot be received.	-
01-E3	Registration demand signal from the slave device is output. Or registration demand signal is output by receiving connection confirmation signal from sub-master device.	-
01-E4	Multiple frame transmission is incomplete.	-

HINT:
Even if no fault is present, this trouble code may be stored depending on the battery condition or hybrid system start voltage.

INSPECTION PROCEDURE

HINT:
- After the inspection is completed, clear the DTCs.
- These DTCs do not indicate a malfunction.

DTC	01-E2	ON / OFF Indication Parameter Error

DESCRIPTION

DTC No.	DTC Detection Condition	Trouble Area
01-E2	Signal for ON / OFF control from master device has problem.	Multi-display

INSPECTION PROCEDURE

HINT:
After the inspection is completed, clear the DTCs.

1	REPLACE MULTI-DISPLAY

NEXT

END

DTC	21-10	Panel Switch Error

DTC	21-11	Touch Switch Error

DTC	23-10	Panel Switch Error

DTC	23-11	Touch Switch Error

DTC	24-10	Panel Switch Error

DTC	24-11	Touch Switch Error

DTC	25-10	Panel Switch Error

DTC	25-11	Touch Switch Error

DESCRIPTION

DTC No.	DTC Detection Condition	Trouble Area
21-10	Panel switch detection circuit has a problem.	Multi-display
21-11	Touch panel switch has a problem.	
23-10	Panel switch detection circuit has a problem.	
23-11	Touch panel switch has a problem.	
24-10	Panel switch detection circuit has a problem.	
24-11	Touch panel switch has a problem.	
25-10	Panel switch detection circuit has a problem.	
25-11	Touch panel switch has a problem.	

INSPECTION PROCEDURE

HINT:
After the inspection is completed, clear the DTCs.

1	REPLACE MULTI-DISPLAY

NEXT

END

DTC	34-10	Error in Picture Circuit

DTC	34-11	No Current in Back-light Error

DTC	34-12	Excess Current in Back-light Error

DESCRIPTION

DTC No.	DTC Detection Condition	Trouble Area
34-10	Error in power supply system for picture circuit	Multi-display
34-11	Decline in power output from inverter circuit for back-light	
34-12	Excess power output from inverter circuit for back-light	

INSPECTION PROCEDURE

HINT:
After the inspection is completed, clear the DTCs.

1	REPLACE MULTI-DISPLAY

NEXT

END

DTC	57-47	Bluetooth Module Initialization Failed

DESCRIPTION

DTC No.	DTC Detection Condition	Trouble Area
57-47	**When one of following conditions is met:** • Bluetooth module is not installed • Problem with Bluetooth module • Problem in communication line to Bluetooth module	Multi-display

INSPECTION PROCEDURE

HINT:
After the inspection is completed, clear the DTCs.

1	REPLACE MULTI-DISPLAY

NEXT

END

DTC	58-10	Gyro Error

DTC	80-10	Gyro Error

DESCRIPTION

DTC No.	DTC Detection Condition	Trouble Area
58-10	Ground short, power supply short, or open circuit in gyro signal	• Gyro sensor • Navigation ECU
80-10	Ground short, power supply short, or open circuit in gyro signal	

INSPECTION PROCEDURE

HINT:
After the inspection is completed, clear the DTCs.

1 CHECK VEHICLE SENSOR (NAVIGATION CHECK MODE)

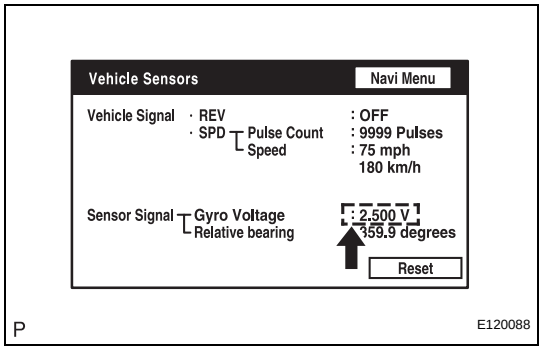

(a) Enter the "Navigation Check" mode (Vehicle Sensors) (see page NS-24).
(b) Check the gyro voltage.
Standard voltage:
0.5 to 4.5 V

NG → **REPLACE NAVIGATION ECU**

OK

2 CLEAR DTC

(a) Clear the DTCs (see page NS-43).

NEXT

3 RECHECK DTC

(a) Recheck for DTCs and check if the same trouble occurs again.
HINT:
If DTCs are detected frequently, replace the navigation ECU.
OK:
Malfunction disappears.

NG → **REPLACE NAVIGATION ECU**

NS

OK

END

DTC	58-11	GPS Receiver Error

DTC	80-11	GPS Receiver Error

DESCRIPTION

DTC No.	DTC Detection Condition	Trouble Area
58-11	**When either condition below is met:** • RTC, ROM, and RAM of GPS receiver and TCXO error • GPS receiver has failed.	Navigation ECU
80-11	**When either condition below is met:** • RTC, ROM, and RAM of GPS receiver and TCXO error • GPS receiver has failed.	

INSPECTION PROCEDURE

HINT:
After the inspection is completed, clear the DTCs.

1	REPLACE NAVIGATION ECU

NEXT

NS

END

DTC	58-40	GPS Antenna Error

DTC	58-41	GPS Antenna Power Source Error

DTC	80-40	GPS Antenna Error

DTC	80-41	GPS Antenna Power Source Error

DESCRIPTION

DTC No.	DTC Detection Condition	Trouble Area
58-40	GPS antenna error	• Wire harness • GPS antenna • Navigation ECU
58-41	Error of power source to GPS antenna	
80-40	GPS antenna error	
80-41	Error of power source to GPS antenna	

INSPECTION PROCEDURE

HINT:
After the inspection is completed, clear the DTCs.

NS

1 CHECK HARNESS AND CONNECTOR (GPS ANTENNA - NAVIGATION ECU)

(a) Check that the GPS antenna cord is securely connected to the navigation ECU.
OK:
The cord is securely connected.

NG → **REPAIR OR REPLACE HARNESS AND CONNECTOR**

OK

2 REPLACE GPS ANTENNA

(a) Replace the GPS antenna with a normal one and check if the same problem occurs again.
(1) Clear the DTCs (see page NS-43).
(2) Recheck for DTCs and check if the same trouble occurs again.
OK:
Same problem does not occur.

NG → **REPLACE NAVIGATION ECU**

OK

END

DTC	58-42	Map Disc Read Error

DTC	80-42	Map Disc Read Error

DESCRIPTION

DTC No.	DTC Detection Condition	Trouble Area
58-42	**When one of following conditions is met:** • Player error • Scratches or dirt on disc • Access to invalid address due to software error	• Map disc • Navigation ECU
80-42	**When one of following conditions is met:** • Player error • Scratches or dirt on disc • Access to invalid address due to software error	

INSPECTION PROCEDURE

HINT:
After the inspection is completed, clear the DTCs.

1	CHECK MAP DISC

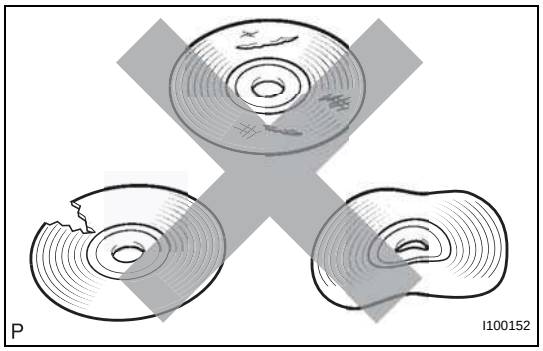

(a) Check that the map disc is not deformed or cracked.
OK:
No deformations or cracks on the map disc.

NG → **Go to step 4**

OK

2	DISC CLEANING

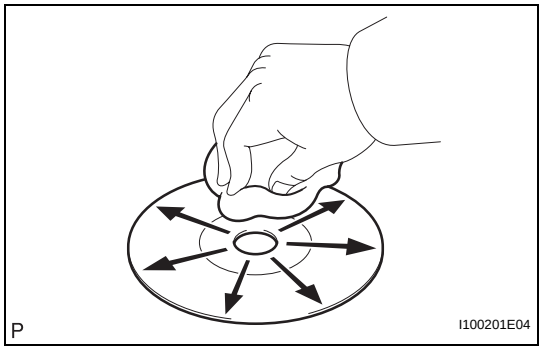

(a) If dirt is on the disc surface, wipe it clean with a soft cloth from the inside to the outside in a radial direction.
NOTICE:
Do not use a conventional record cleaner or anti-static preservative.

NEXT

NS

3	DTC CLEAR AND RECHECK

(a) Clear the DTCs (see page NS-43).
(b) Recheck for DTCs and check if the same trouble occurs again.
OK:
Same problem does not occur.

OK → **END**

NG

4	REPLACE MAP DISC

(a) Replace the map disc.
(b) Clear the DTCs and recheck for DTCs.
(c) Check if the same trouble occurs again.
OK:
Same problem does not occur.

OK → **END**

NS

NG

REPLACE NAVIGATION ECU

DTC	58-43	SPD Signal Error

DTC	80-43	SPD Signal Error

DESCRIPTION

DTC No.	DTC Detection Condition	Trouble Area
58-43	Difference between GPS speed and SPD pulse is detected.	• Speed signal circuit • Navigation ECU
80-43	Difference between GPS speed and SPD pulse is detected.	

INSPECTION PROCEDURE

HINT:
After the inspection is completed, clear the DTCs.

1	CHECK VEHICLE SENSOR (NAVIGATION CHECK MODE)

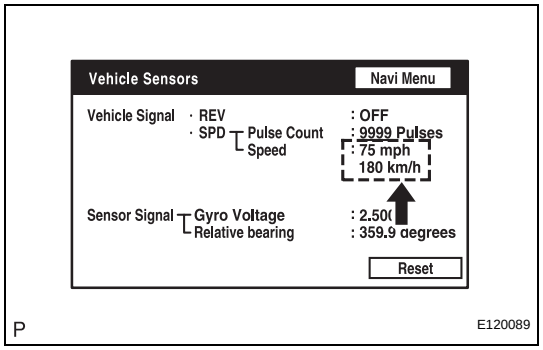

(a) Enter the "Navigation Check" mode (Vehicle Sensors) (see page NS-24).

(b) While driving the vehicle, compare the "SPD" indicator to the reading on the speedometer. Check if these readings are almost equal.

OK:

The readings are almost equal.

OK → **REPLACE NAVIGATION ECU**

NG

2	PROCEED TO NEXT INSPECTION PROCEDURE SHOWN IN PROBLEM SYMPTOMS TABLE

(a) Refer to "Speed signal does not change in the navigation check mode" in the problem symptoms table.

NEXT

END

NS

DTC	58-44	Player Error

DTC	80-44	Player Error

DESCRIPTION

DTC No.	DTC Detection Condition	Trouble Area
58-44	Map player error is detected.	Navigation ECU
80-44	Map player error is detected.	

INSPECTION PROCEDURE

HINT:
After the inspection is completed, clear the DTCs.

1 CHECK NAVIGATION ECU

(a) Check if a disc can be inserted or ejected normally.
OK:
A disc can be inserted or ejected normally.

NG → **REPLACE NAVIGATION ECU**

NS

OK

2 DTC CLEAR AND RECHECK

(a) Clear the DTCs (see page NS-43).
(b) Recheck for DTCs and check if the same trouble occurs again.
OK:
Same problem does not occur.

OK → **END**

NG

REPLACE NAVIGATION ECU

DTC	58-45	High Temperature

DTC	80-45	High Temperature

DESCRIPTION

DTC No.	DTC Detection Condition	Trouble Area
58-45	High map disc player temperature is detected (Over 80°C (176°F))	Navigation ECU
80-45	High map disc player temperature is detected (Over 80°C (176°F))	

INSPECTION PROCEDURE

HINT:
After the inspection is completed, clear the DTCs.

1	CHECK NAVIGATION ECU

(a) Park the vehicle in a cool place.
(b) Check that the temperature of the navigation ECU has become sufficiently low, then start the engine to verify the malfunction symptom.
OK:
Same problem does not occur.

NG → **REPLACE NAVIGATION ECU**

OK

END

NS

DTC	5C-40	Camera Picture Error

DESCRIPTION

DTC No.	DTC Detection Condition	Trouble Area
5C-40	Synchronous signal from the camera cannot be transmitted.	• Wire harness • Television camera • Multi-display

WIRING DIAGRAM

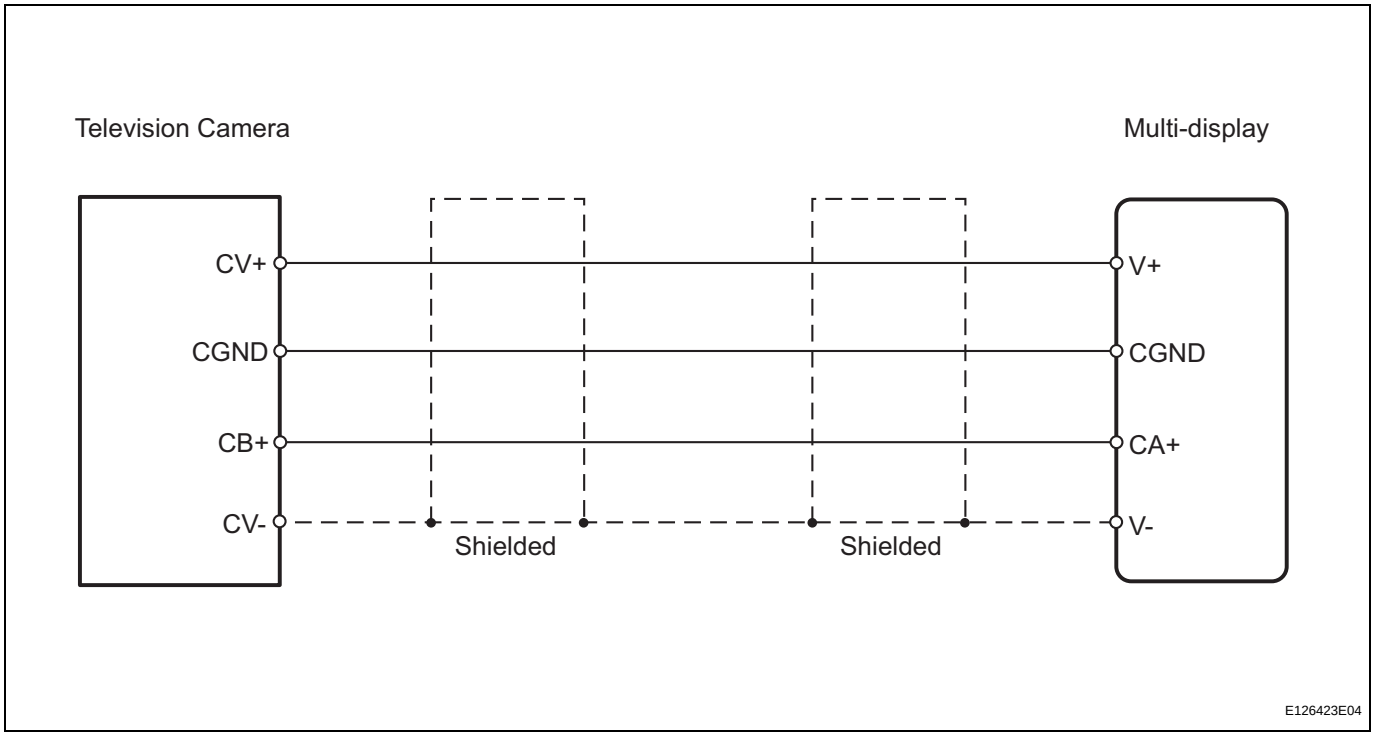

INSPECTION PROCEDURE

HINT:
After the inspection is completed, clear the DTCs.

1 CHECK WIRE HARNESS (MULTI-DISPLAY - TELEVISION CAMERA)

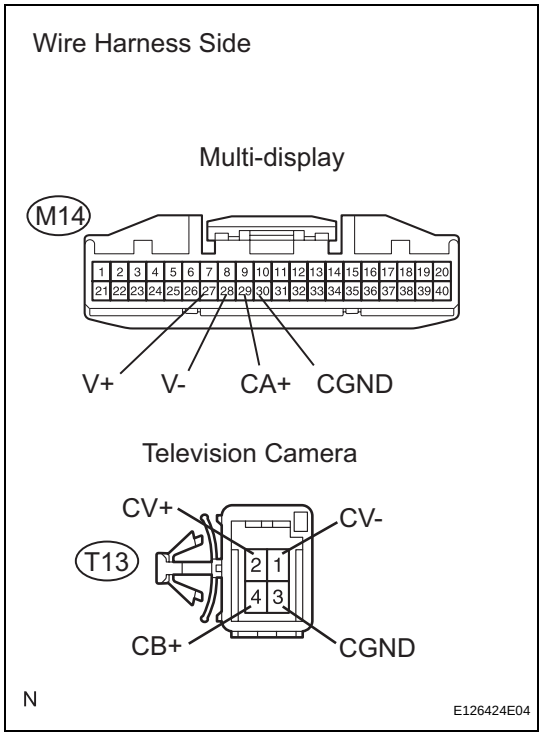

(a) Disconnect the M14 display connector.
(b) Disconnect the T13 camera connector.
(c) Measure the resistance of the wire harness side connectors.
Standard resistance

Tester Connection	Specified Condition
T13-4 (CB+) - M14-29 (CA+)	Below 1 Ω
T13-3 (CGND) - M14-30 (CGND)	Below 1 Ω
T13-2 (CV+) - M14-27 (V+)	Below 1 Ω
T13-1 (CV-) - M14-28 (V-)	Below 1 Ω
T13-4 (CB+) - Body ground	10 kΩ or higher
T13-3 (CGND) - Body ground	10 kΩ or higher
T13-2 (CV+) - Body ground	10 kΩ or higher
T13-1 (CV-) - Body ground	10 kΩ or higher

NG → **REPAIR OR REPLACE HARNESS AND CONNECTOR**

OK

2 CHECK MULTI-DISPLAY (CA+ VOLTAGE)

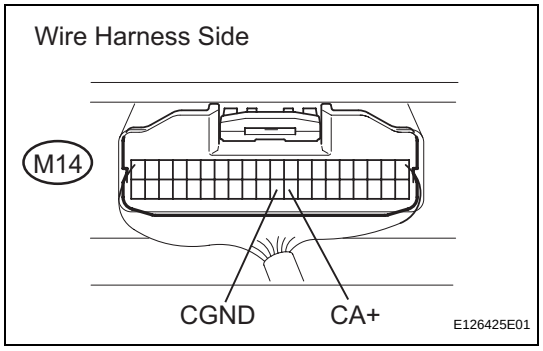

(a) Measure the voltage of the display.
Standard voltage

Tester Connection	Condition	Specified Condition
M14-29 (CA+) - M14-30 (CGND)	Power switch ON (IG), shift lever R position	Approx. 6 V

NG → **REPLACE MULTI-DISPLAY**

OK

REPLACE TELEVISION CAMERA ASSEMBLY

NS

No Sound can be Heard from Speakers

INSPECTION PROCEDURE

1	CHECK AUDIO SETTINGS

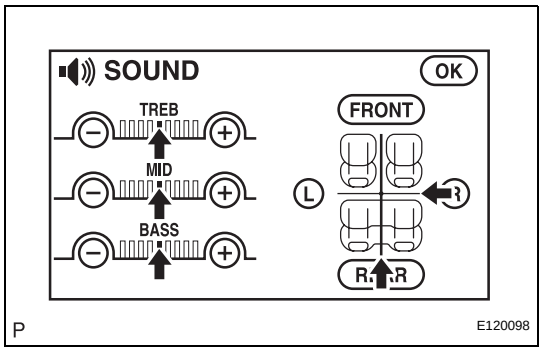

(a) Enter the sound adjustment screen by pressing the "SOUND" switch on the AUDIO display.

(b) Set volume, fader, and balance to the initial values and check that sound is normal.

OK:

Audio returns to normal.

HINT:

Sound quality adjustment items vary depending on the type of the amplifier.

OK → **END**

NG

PROCEED TO NEXT INSPECTION PROCEDURE SHOWN IN PROBLEM SYMPTOMS TABLE

No Image Appears on Multi-display

INSPECTION PROCEDURE

1 CHECK DISPLAY SETTING

(a) Check that the display is not in "Screen OFF" mode.
OK:
The display setting is not in "screen OFF" mode.

NG → **CHANGE SCREEN TO "SCREEN ON" MODE**

OK

2 CHECK IMAGE QUALITY SETTING

(a) Check that the screen color quality can be set.
OK:
Setting is possible.

OK → **PRESS PANEL SWITCH "DISPLAY" AND SET SCREEN COLOR QUALITY TO NORMAL**

NG

3 CHECK CABIN

(a) Check that condensation is not likely to occur in the cabin, and that the temperature is not high or extremely low in the cabin.
HINT:
- A humid cabin and a rapid change in temperature may lead to condensation. Condensation in the cabin may short circuit the screen.
- The appropriate cabin temperature is 20 to 30°C (68 to 86°F).

OK:
Condensation is not likely and temperature is not high or extremely low.

NG → **SET CABIN TO APPROPRIATE TEMPERATURE**

OK

PROCEED TO NEXT INSPECTION PROCEDURE SHOWN IN PROBLEM SYMPTOMS TABLE

Illumination for Panel Switch does not Come on with Tail Switch ON

INSPECTION PROCEDURE

1 INSPECT NIGHTTIME ILLUMINATION

(a) Turn on the light control switch and check the nighttime illumination of the vehicle interior.

Result:

Result	Proceed to
Only multi-display nighttime illumination does not operate	A
No nighttime illumination at all	B

B → **GO TO LIGHTING SYSTEM**

A

2 CHECK VEHICLE SIGNAL (DISPLAY CHECK MODE)

NS

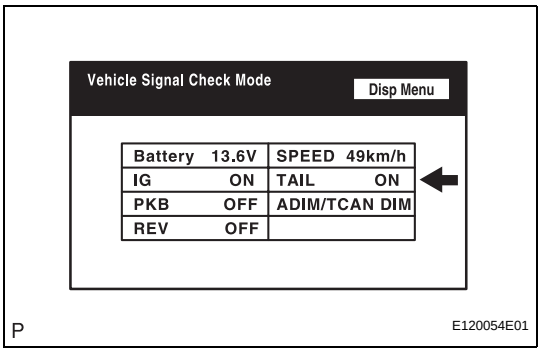

(a) Enter the "Display Check" mode (Vehicle Signal Check Mode) (see page NS-18).

(b) Check that the display changes between ON and OFF according to the light control switch operation.

OK

Light Control Switch	Display
TAIL or ON	**ON**
OFF	**OFF**

HINT:
This display is updated once per second. As a result, it is normal for the display to lag behind the actual change in the switch.

OK → **REPLACE MULTI-DISPLAY**

NG

PROCEED TO NEXT INSPECTION PROCEDURE SHOWN IN PROBLEM SYMPTOMS TABLE

Display does not Dim when Light Control Switch is Turned ON

INSPECTION PROCEDURE

1 CHECK IMAGE QUALITY SETTING

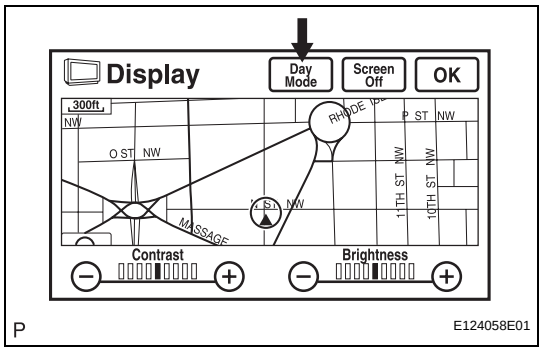

(a) Enter the display adjustment screen by pressing the "DISPLAY" switch.
(b) Turn the light control switch to the TAIL position.
(c) Check if "Day Mode" on the display is ON.
OK:
"Day Mode" is ON.

OK → **TURN "DAY MODE" SETTING OFF**

NG

2 CHECK VEHICLE SIGNAL (DISPLAY VEHICLE SIGNAL)

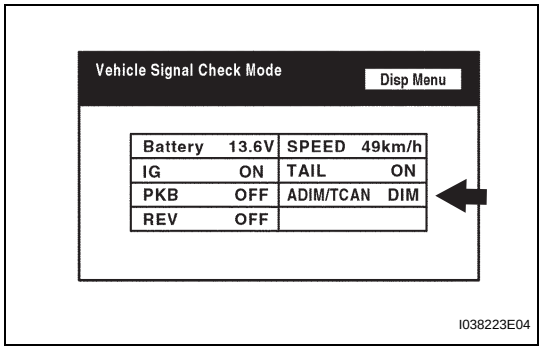

(a) Enter the "Display Check" mode (Vehicle Signal Check Mode) (see page NS-18).
(b) Check that the display changes between ON and OFF according to the light control switch operation.
OK

Light Control Switch Condition	Display Condition
TAIL or ON	DIM
OFF	BRIGHT

HINT:
The display is updated once per second. It is normal for the display to lag behind the actual switch operation.

NG → **REPLACE MULTI-DISPLAY**

OK

PROCEED TO NEXT INSPECTION PROCEDURE SHOWN IN PROBLEM SYMPTOMS TABLE

NS

Panel Switches do not Function

INSPECTION PROCEDURE

1 CHECK PANEL SWITCH

(a) Check for foreign matter around the switch that might prevent operation.
OK:
No foreign matter is found.

NG → **REMOVE ANY FOREIGN MATTER FOUND**

OK

2 CHECK PANEL SWITCH (DISPLAY CHECK MODE)

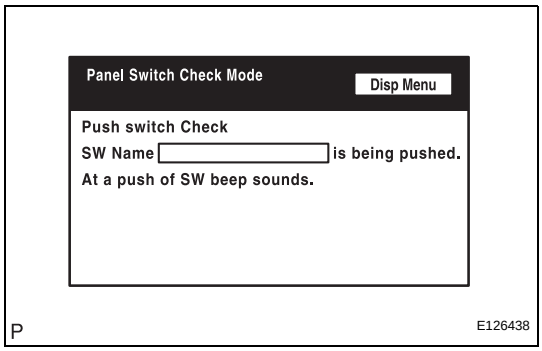

(a) Enter the "Display Check" mode (Panel Switch Check Mode) (see page NS-18).
(b) Operate the abnormal switch and check if the switch name and status are correctly displayed.
OK:
The switch name and status are correctly displayed as operated.

OK → **REPLACE MULTI-DISPLAY**

NG

PROCEED TO NEXT INSPECTION PROCEDURE SHOWN IN PROBLEM SYMPTOMS TABLE

NS

Touch Panel Switch does not Function

INSPECTION PROCEDURE

1	CHECK TOUCH PANEL

(a) Check for foreign matter on the display.
OK:
The display is clean.

NG → **CLEAN DISPLAY AND RECHECK TOUCH PANEL**

OK

2	CHECK TOUCH SWITCH (DISPLAY CHECK MODE)

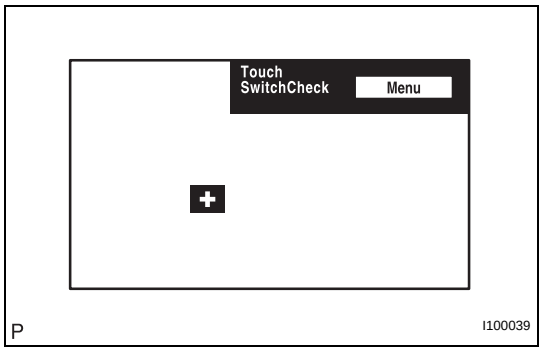

(a) Enter the "Display Check" mode (Touch Switch Check) (see page NS-18).
(b) Touch the display in the area where the switch malfunction occurs.
OK:
A "+" mark appears at the touched position.

NG → **REPLACE MULTI-DISPLAY**

OK

PROCEED TO NEXT INSPECTION PROCEDURE SHOWN IN PROBLEM SYMPTOMS TABLE

Screen Flicker or Color Distortion

INSPECTION PROCEDURE

1 CHECK DISPLAY SETTING

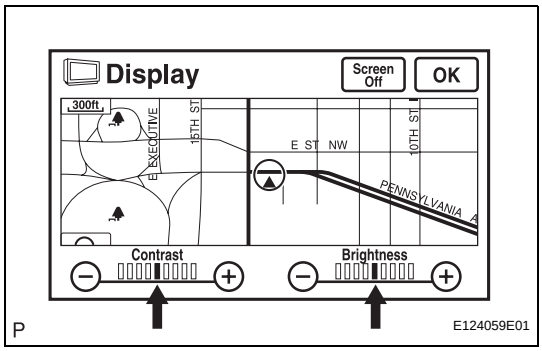

(a) Enter the display adjustment screen by pressing the "DISP" switch.

(b) Reset display settings (contrast, brightness) and check that the screen appears normal.

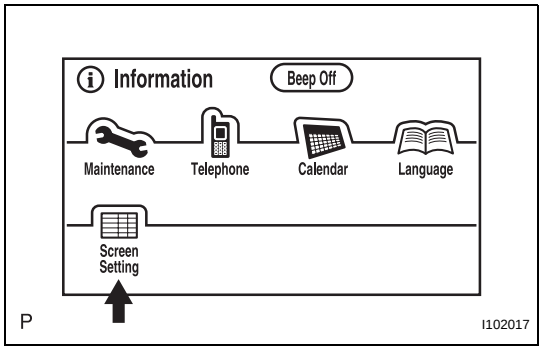

(c) Press the "INFO" switch and then select "Screen Setting."

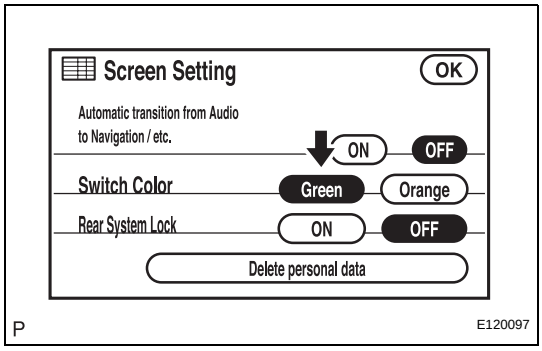

(d) Set the "Switch Color" to "Green" (initial setting) and check if the display returns to normal.

OK:

Returns to normal.

OK → **END**

NG

2 CHECK CABIN

(a) Check that the cabin temperature is warmer than -20°C (-4.0°F).

OK:

Cabin is warmer than -20°C (-4.0°F).

NG → **HEAT CABIN AND RECHECK TEMPERATURE**

OK

NS

3 CHECK COLOR BAR (DISPLAY CHECK MODE)

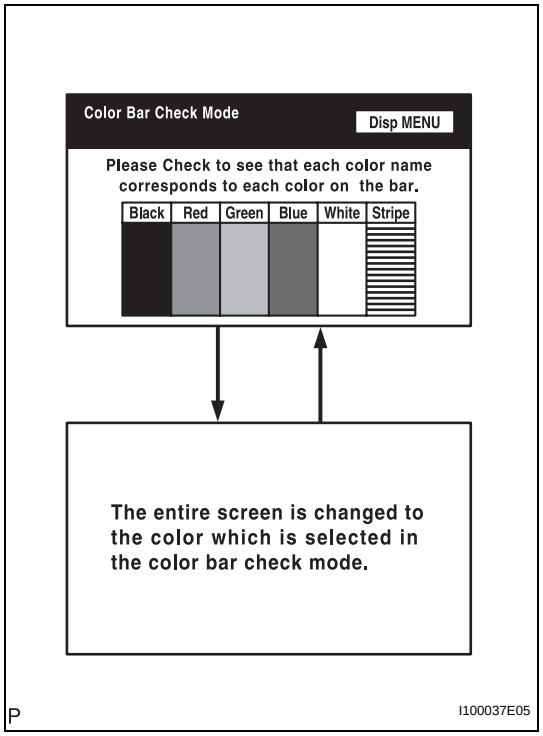

(a) Enter the "Display Check" mode (Color Bar Check) (see page NS-18).

(b) Check that the color bars match the displayed names.

OK:

Color bars match the displayed names.

NG → **REPLACE MULTI-DISPLAY**

OK

4 CHECK NAVI COLOR BAR (NAVIGATION CHECK MODE)

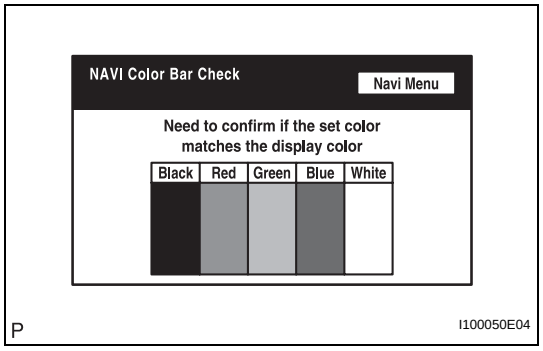

(a) Enter the "Navigation Check" mode (NAVI Color Bar Check) (see page NS-24).

(b) Check that the color bars match the displayed names.

OK:

Color bars match the displayed names.

OK → **REPLACE MULTI-DISPLAY**

NG

PROCEED TO NEXT CIRCUIT INSPECTION SHOWN IN PROBLEM SYMPTOMS TABLE

NS

MAP Disc cannot be Inserted

INSPECTION PROCEDURE

1	CHECK MAP DISC

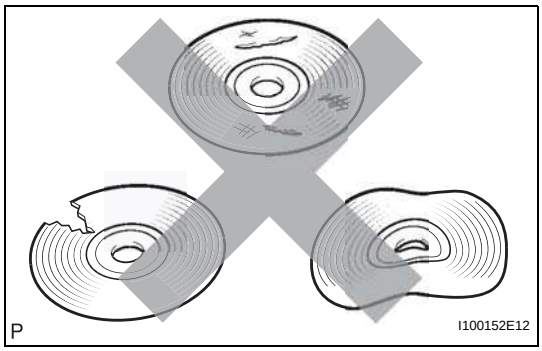

(a) Check that the map disc is not deformed or cracked.
OK:
No deformations or cracks on the map disc.

NG → **REPLACE MAP DISC**

OK

PROCEED TO NEXT CIRCUIT INSPECTION SHOWN IN PROBLEM SYMPTOMS TABLE

MAP Disc cannot be Ejected

INSPECTION PROCEDURE

1 CHECK MULTI-DISPLAY

(a) Turn the power switch ON (ACC).
(b) Keep pressing the MAP eject switch for 5 seconds and check if the disc is ejected by forced ejection.
OK:
The disc is ejected.

NG → **PROCEED TO NEXT INSPECTION PROCEDURE SHOWN IN PROBLEM SYMPTOMS TABLE**

OK

2 CHECK MAP DISC

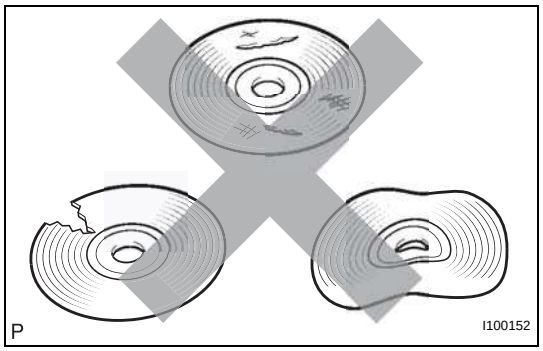

(a) Check that the map disc is not deformed or cracked.
OK:
No deformations or cracks on the map disc.

NG → **REPLACE MAP DISC**

OK

END

NS

Vehicle Position Mark Deviates Greatly

INSPECTION PROCEDURE

1 CHECK GPS MARK

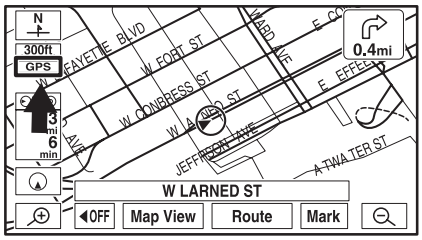

P I100195E01

(a) Check that the GPS mark is displayed.
OK:
GPS mark is displayed.

NG → **GO TO "GPS MARK IS NOT DISPLAYED" IN PROBLEM SYMPTOMS TABLE**

OK

2 CHECK VEHICLE SENSOR (NAVIGATION CHECK MODE)

NS

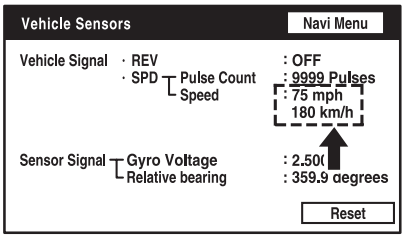

P E120089

(a) Enter the "Navigation Check" mode (Vehicle Sensors) (see page NS-24).
(b) While driving the vehicle, compare the "Speed" indicator to the reading on the speedometer. Check that these readings are almost equal.
OK:
The readings are almost equal.

NG → **GO TO "SPEED SIGNAL DOES NOT CHANGE IN NAVIGATION CHECK MODE" IN PROBLEM SYMPTOMS TABLE**

OK

3 CHECK VEHICLE SENSOR (NAVIGATION CHECK MODE)

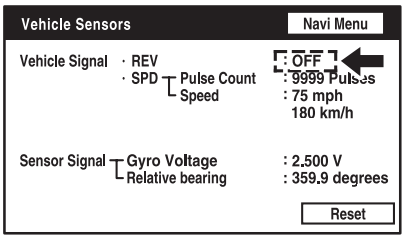

P E120101E01

(a) Check that the display changes between ON and OFF according to the shift lever operation (P and R).
OK

Shift Lever Position	Display
P	OFF
Reverse position	ON

HINT:
The display is updated once per second. It is normal for the display to lag behind the actual switch operation.

NG → **GO TO "REVERSE SIGNAL DOES NOT CHANGE IN THE NAVIGATION CHECK MODE" IN PROBLEM SYMPTOMS TABLE**

OK

PROCEED TO NEXT INSPECTION PROCEDURE SHOWN IN PROBLEM SYMPTOMS TABLE

Cursor or MAP Rotates when Vehicle Stopped

INSPECTION PROCEDURE

1	CHECK CONDITION

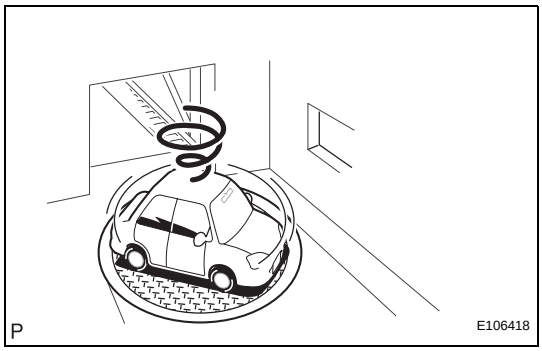

(a) Check with the customer if the vehicle has been turned by a turntable at parking.

OK:

Vehicle has not been turned by turntable.

HINT:

If the power switch is turned to the ON (ACC or IG) position while the vehicle is being turned by a turntable, the system may store the angular velocity at this time. For this reason, the vehicle position cursor could deviate.

NG → **TURN POWER SWITCH TO ON (IG) POSITION WHEN VEHICLE IS COMPLETELY STOPPED**

OK

NS

PROCEED TO NEXT INSPECTION PROCEDURE SHOWN IN PROBLEM SYMPTOMS TABLE

Vehicle Position Mark is not Updated

INSPECTION PROCEDURE

1 CHECK MAP DISC

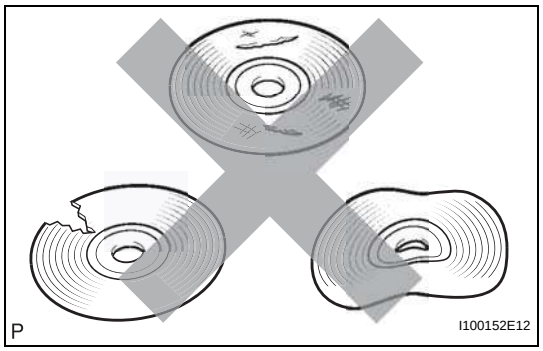

(a) Check that the map disc is not deformed or cracked.
OK:
No deformations or cracks on map disc.

NG → **REPLACE MAP DISC**

OK

2 CHECK MAP DISPLAY

(a) Check if a touch scroll can be performed on the map display.
OK:
Touch scroll can be performed.

NG → **PROCEED TO NEXT INSPECTION PROCEDURE SHOWN IN PROBLEM SYMPTOMS TABLE**

OK

3 CHECK VEHICLE SENSOR (NAVIGATION CHECK MODE)

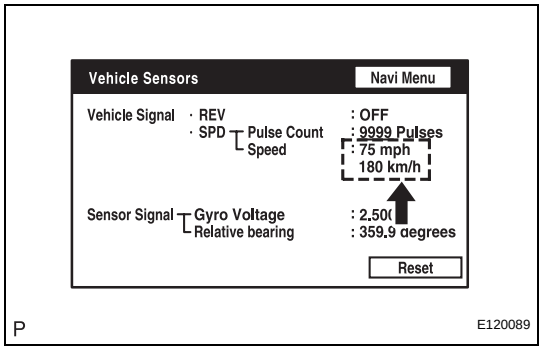

(a) Enter the "Navigation Check" mode (Vehicle Sensors) (see page NS-24).
(b) While driving the vehicle, compare the "Speed" indicator to the reading on the speedometer. Check if these readings are almost equal.
OK:
The readings are almost equal.

NG → **GO TO "SPEED SIGNAL DOES NOT CHANGE IN NAVIGATION CHECK MODE" IN PROBLEM SYMPTOMS TABLE**

OK

PROCEED TO NEXT INSPECTION PROCEDURE SHOWN IN PROBLEM SYMPTOMS TABLE

NS

Current Position Display does not Appear

INSPECTION PROCEDURE

1	CHECK MAP DISC

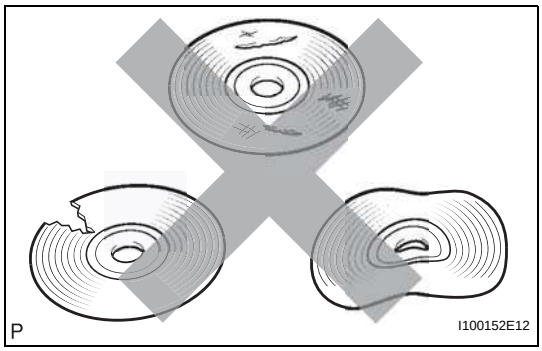

(a) Check that the map disc is not deformed or cracked.
OK:
No deformations or cracks on the map disc.

NG → **REPLACE MAP DISC**

OK

PROCEED TO NEXT INSPECTION PROCEDURE SHOWN IN PROBLEM SYMPTOMS TABLE

GPS Mark is not Displayed

INSPECTION PROCEDURE

1	CHECK CABIN

(a) Check the cabin for any object that might interrupt radio reception on the instrument panel. If such an object exists, remove it and check if the GPS mark reappears.
HINT:
The GPS uses extremely faint radio waves originating from satellites. If the signal is interrupted by obstructions or other radio waves, the GPS may not be able to properly receive the signal.
OK:
Mark appears.

OK → **NORMAL OPERATION**

NG

2	CHECK SURROUNDINGS

(a) Check if the vehicle is in a location where GPS signal reception is poor. If the vehicle is in such a place, relocate the vehicle and check if the GPS mark reappears.
HINT:
The GPS uses 24 satellites in 6 orbits. At any point in time, 4 satellites should be able to pinpoint your vehicle. However, GPS signals may not reach the vehicle due to influence from the surroundings, vehicle direction, and time. For illustrated examples, see below.

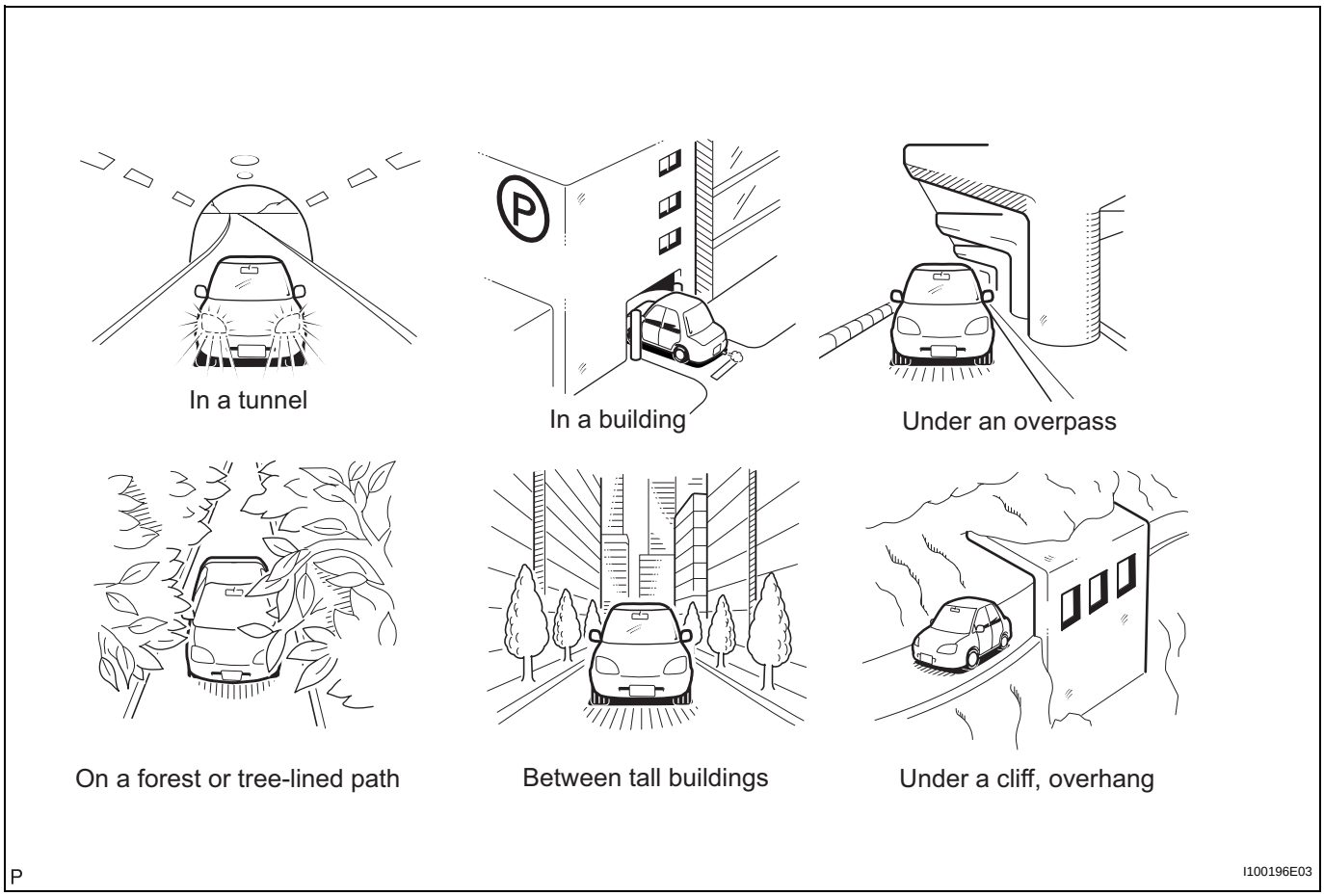

OK:
GPS mark is displayed.

OK → **SYSTEM RETURN TO NORMAL**

NG

3 CHECK GPS INFORMATION (NAVIGATION CHECK MODE)

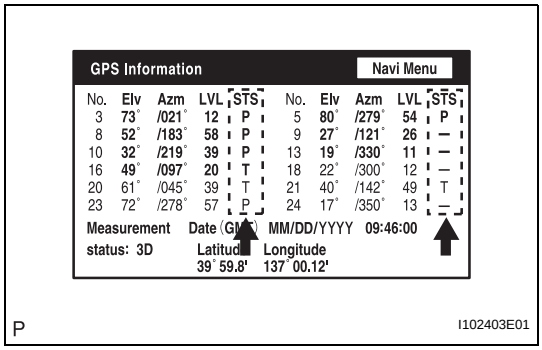

(a) Enter the "Navigation Check" mode (GPS Information) (see page NS-24).

(b) Check how many of the following codes appear in the "STS" column.

For DENSO Made:
T, P

For AISIN AW Made:
08H, 04H

OK:
At least 3 codes appear.

NG → **PROCEED TO NEXT INSPECTION PROCEDURE SHOWN IN PROBLEM SYMPTOMS TABLE**

NS

OK

REPLACE NAVIGATION ECU

Voice Guidance does not Function

INSPECTION PROCEDURE

1 CHECK NAVIGATION SYSTEM SETTING

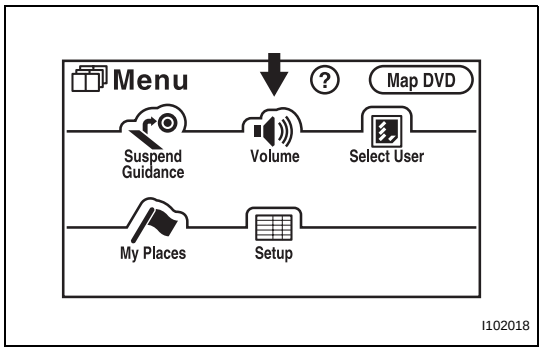

(a) Enter the "Menu" screen by pressing the "MENU" switch.
(b) Select "Volume".

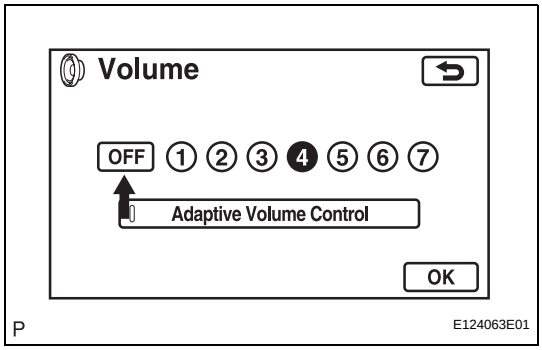

(c) Check that "OFF" is not selected.
OK:
OFF is not selected.

NG → **TURN VOICE GUIDANCE VOLUME UP TO 4 USING VOICE ADJUSTMENT SWITCHES**

OK

2 CHECK NAVIGATION SETTING

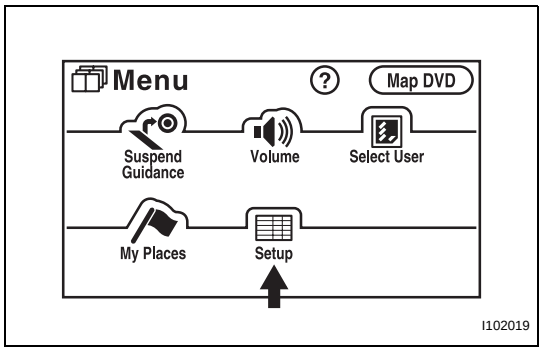

(a) Enter the "Menu" screen by pressing the "MENU" switch.
(b) Select "Setup".

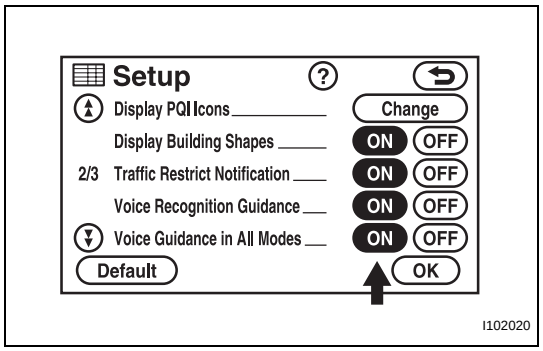

(c) Check that "Voice Guidance in All Modes" is not OFF.
OK:
"Voice Guidance in All Modes" is not OFF.

NG → **TURN VOICE GUIDANCE IN ALL MODES "ON"**

OK

3 CHECK NAVIGATION SETTING

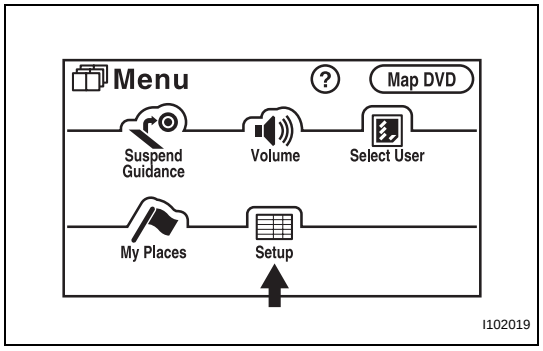

(a) Enter the "Menu" screen by pressing the "MENU" switch.
(b) Select "Setup".

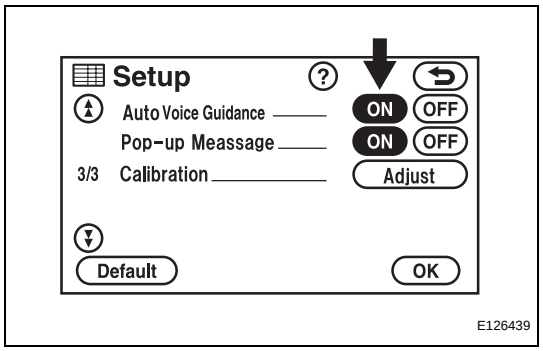

(c) Check that "Auto Voice Guidance" is not OFF.
OK:
"Auto Voice Guidance" is not OFF.

NG → **TURN AUTO VOICE GUIDANCE "ON"**

OK

4 CHECK MAP DISC

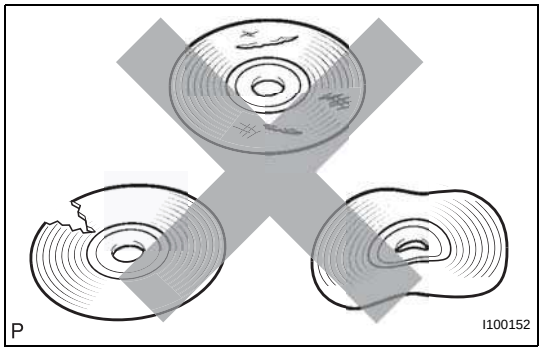

(a) Check that the map disc is not deformed or cracked.
OK:
No deformations or cracks on map disc.

NG → **REPLACE MAP DISC**

NS

OK

5	CHECK RADIO RECEIVER

(a) Check that audio can be heard from the speakers.
OK:
Audio can be heard.

NG → **GO TO AUDIO AND VISUAL SYSTEM**

OK

PROCEED TO NEXT INSPECTION PROCEDURE SHOWN IN PROBLEM SYMPTOMS TABLE

MAP Display Incomplete

INSPECTION PROCEDURE

1 CHECK MAP DISC

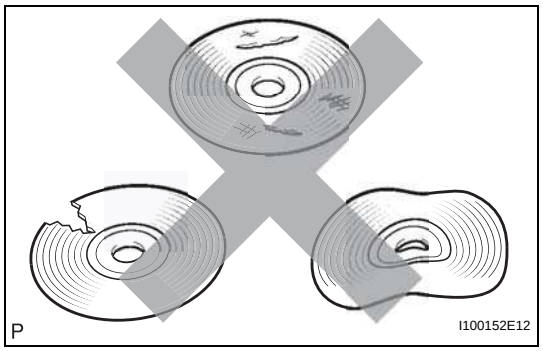

(a) Check that the map disc is not deformed or cracked.
OK:
No deformations or cracks on map disc.

NG → **REPLACE MAP DISC**

OK

2 CHECK NAVIGATION DISPLAY

(a) Check that displays other than the navigation display are complete.
OK:
No other incomplete displays are found.

NG → **PROCEED TO NEXT INSPECTION PROCEDURE SHOWN IN PROBLEM SYMPTOMS TABLE**

OK

REPLACE NAVIGATION ECU

NS

Route cannot be Calculated

INSPECTION PROCEDURE

1	CHECK MAP DISC

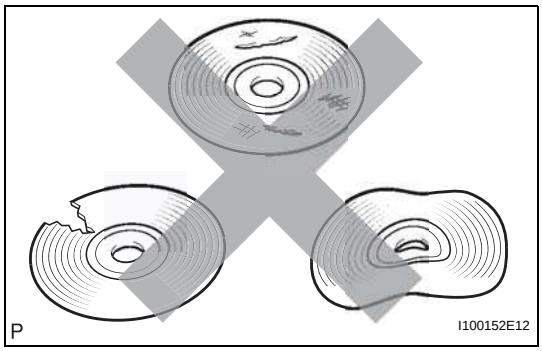

(a) Check that the map disc is not deformed or cracked.
OK:
No deformations or cracks on map disc.

NG → **REPLACE MAP DISC**

OK

2	SET DESTINATION

(a) Set another destination and check if the system can calculate the route correctly.
OK:
Route can be correctly calculated.

NG → **PROCEED TO NEXT INSPECTION PROCEDURE SHOWN IN PROBLEM SYMPTOMS TABLE**

OK

END

NS

GYRO Error

INSPECTION PROCEDURE

1	CHECK VEHICLE SENSOR (NAVIGATION CHECK MODE)

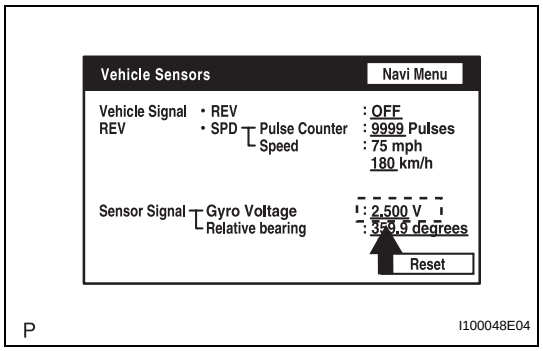

(a) Enter the "Navigation Check" mode (Vehicle Sensors) (see page NS-24).

(b) Check the gyro voltage.

Standard voltage:
0.5 to 4.5 V

NG → **REPLACE NAVIGATION ECU**

OK

PROCEED TO NEXT INSPECTION PROCEDURE SHOWN IN PROBLEM SYMPTOMS TABLE

MAP Disc Read Error

INSPECTION PROCEDURE

1	CHECK MAP DISC

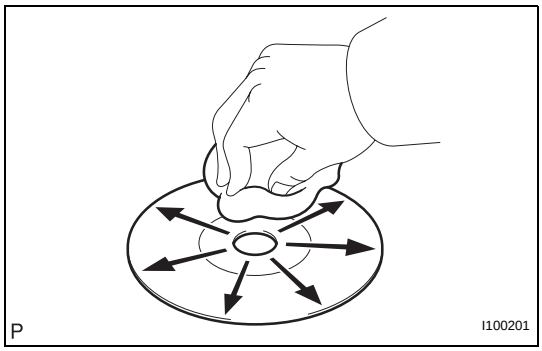

(a) Check for dirt on the map disc surface.
OK:
No dirt is on the map disc surface.

NOTICE:
Do not use a conventional record cleaner or anti-static preservative.

HINT:
If the disc is dirty, clean the disc by wiping the disc surface radially with a soft cloth.

NG → **CLEAN MAP DISC**

OK

2	CHECK MAP DISC

NS

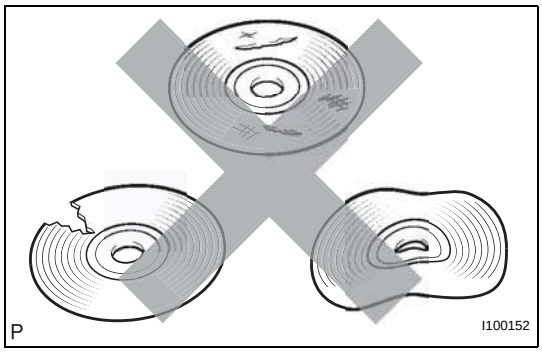

(a) Check that the map disc is not deformed or cracked.
OK:
No deformations or cracks appear on the map disc.

NG → **REPLACE MAP DISC**

OK

PROCEED TO NEXT INSPECTION PROCEDURE SHOWN IN PROBLEM SYMPTOMS TABLE

Voice Recognition Difficulty

INSPECTION PROCEDURE

1 CHECK CONDITION

(a) Check if the system's voice recognition level is low by using only one particular voice.
OK:
System's voice recognition level is low with any voice.

NG → **SYSTEM'S VOICE RECOGNITION LEVEL VARIES DEPENDING ON VOICE AND PRONUNCIATION. THIS IS NOT A MALFUNCTION.**

OK

2 CHECK MAP DISC

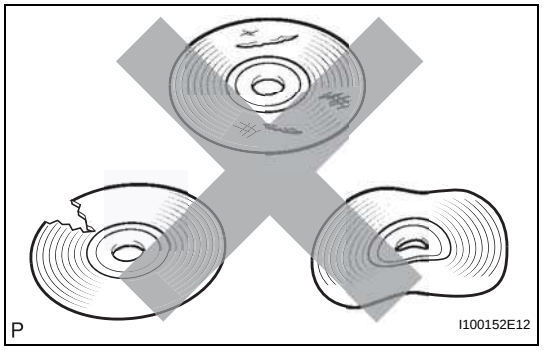

(a) Check that the map disc is not deformed or cracked.
OK:
No deformations or cracks on map disc.

NG → **REPLACE MAP DISC**

OK

3 CHECK MAP DISC

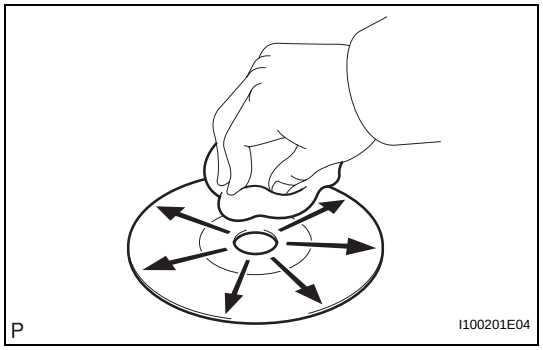

(a) Check for dirt on the map disc surface.
OK:
No dirt is on map disc surface.
NOTICE:
Do not use a conventional record cleaner or anti-static preservative.
HINT:
If the disc is dirty, clean the disc by wiping the disc surface radially with a soft cloth.

NG → **CLEAN MAP DISC**

OK

NS

4	CHECK MICROPHONE (NAVIGATION CHECK MODE)

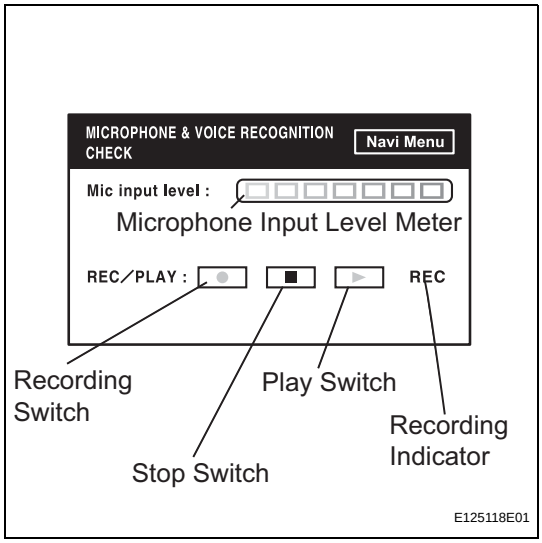

(a) Enter the "MICROPHONE & VOICE RECOGNITION CHECK" mode (see page NS-24).

(b) When a voice is input into the microphone, check that the microphone input level meter changes according to the input voice.

(c) Push the recording switch and perform voice recording.
HINT:
The recording limit is 5 seconds.

(d) Check that the recording indicator remains on while recording and that the recorded voice is played normally without noise or distortion.
OK:
All check results are normal.

NG → **PROCEED TO NEXT INSPECTION PROCEDURE SHOWN IN PROBLEM SYMPTOMS TABLE**

OK

NS

END

Voice is not Recognized

INSPECTION PROCEDURE

1 CHECK NAVIGATION SETTINGS

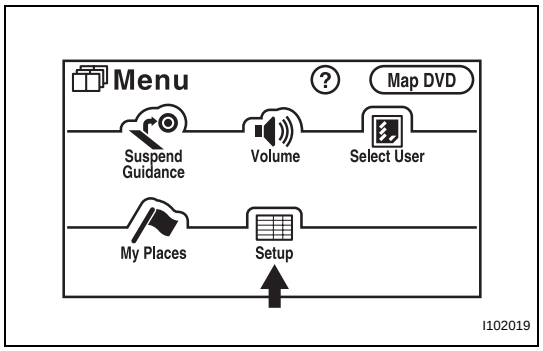

(a) Enter the "Menu" screen by pressing the "MENU" switch.
(b) Select "Set up".

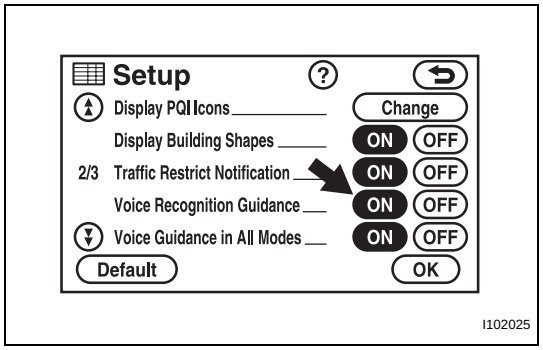

(c) Check that "Voice Recognition Guidance" is not OFF.
OK:
Voice Recognition Guidance is not OFF.

NG → **TURN VOICE RECOGNITION GUIDANCE "ON"**

OK

2 CHECK MAP DISC

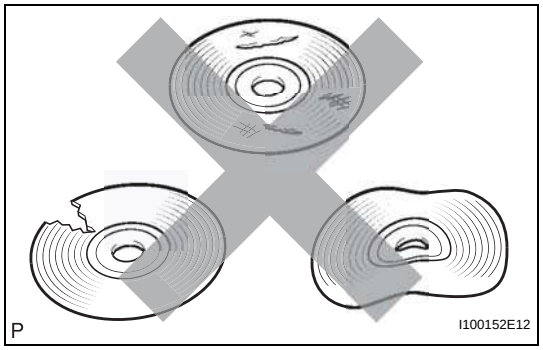

(a) Check that the map disc is not deformed or cracked.
OK:
No deformations or cracks on map disc.

NG → **REPLACE MAP DISC**

OK

NS

3 CHECK MAP DISC

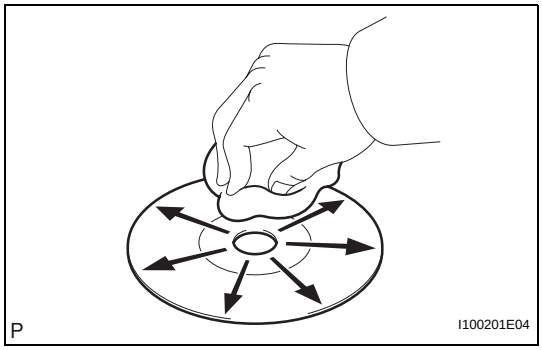

(a) Check for dirt on the map disc surface.
OK:
No dirt is on the map disc surface.
NOTICE:
Do not use a conventional record cleaner or anti-static preservative.
HINT:
If the disc is dirty, clean the disc by wiping the disc surface radially with a soft cloth.

NG → **CLEAN MAP DISC**

OK

4 CHECK MICROPHONE (NAVIGATION CHECK MODE)

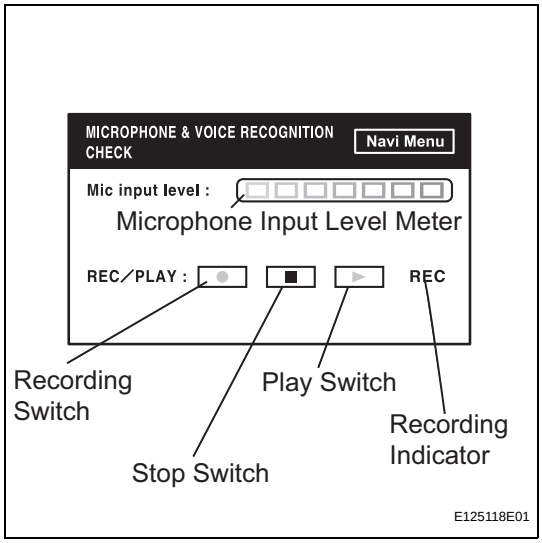

(a) Enter the "MICROPHONE & VOICE RECOGNITION CHECK" mode (see page NS-24).
(b) When a voice is input into the microphone, check that the microphone input level meter changes according to the input voice.
(c) Push the recording switch and perform voice recording.
HINT:
The recording limit is 5 seconds.
(d) Check that the recording indicator remains on while recording and that the recorded voice is played normally without noise or distortion.
OK:
All check results are normal.

OK → **REPLACE NAVIGATION ECU**

NG

NS

5	CHECK MICROPHONE (DISPLAY CHECK MODE)

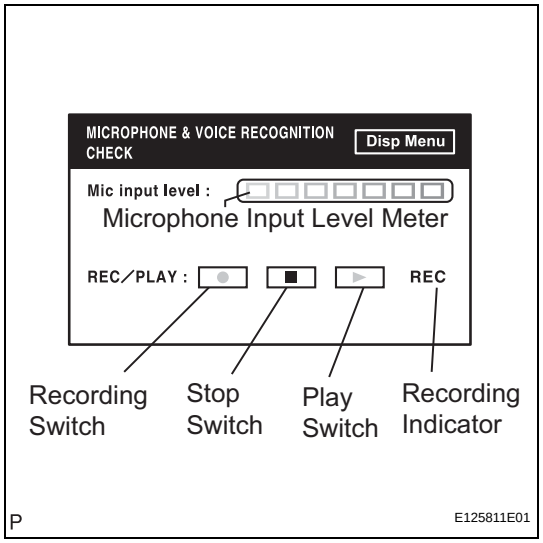

(a) Enter the "MICROPHONE & VOICE RECOGNITION CHECK" mode (see page NS-18).

(b) When a voice is input into the microphone, check that the microphone input level meter changes according to the input voice.

(c) Push the recording switch and perform voice recording.
HINT:
The recording limit is 5 seconds.

(d) Check that the recording indicator remains on while recording and that the recorded voice is played normally without noise or distortion.
OK:
All check results are normal.

NG → **PROCEED TO NEXT INSPECTION PROCEDURE SHOWN IN PROBLEM SYMPTOMS TABLE**

OK

END

NS

Cellular Phone Registration Failure, Phone Directory Transfer Failure

INSPECTION PROCEDURE

1 CHECK CURRENT CONDITION

(a) Check for Bluetooth capable cellular phones and vehicles in the area.

Result:

Conditions	Proceed to
Another Bluetooth compatible cellular phone is present	A
Another Bluetooth compatible vehicle is present	B
None of the above	C

B → **Go to step 3**

C → **Go to step 4**

A

NS

2 CHECK USING ANOTHER CELLULAR PHONE

(a) Check if the system functions using another Bluetooth compatible cellular phone.
HINT:
- Confirm that either the same or a different version of another Bluetooth compatible cellular phone complies with the system.
- Depending on the version, some Bluetooth compatible cellular phones cannot be used.

OK:
System functions.

NG → **REPLACE MULTI-DISPLAY**

OK

USE BLUETOOTH COMPATIBLE CELLULAR PHONE (DEPENDING ON THE VERSION)

3 CHECK USING ANOTHER BLUETOOTH CAPABLE VEHICLE

(a) Register the cellular phone with another vehicle and check if the system functions normally.
HINT:
Depending on the version, some Bluetooth compatible cellular phones cannot be used.

OK:
System functions.

OK → **REPLACE MULTI-DISPLAY**

NG

USE BLUETOOTH COMPATIBLE CELLULAR PHONE

4	CHECK CELLULAR PHONE

(a) Check if the cellular phone is Bluetooth compatible.
HINT:
Some versions of Bluetooth compatible cellular phones may not function.
OK:
The phone is Bluetooth compatible.

NG → **USE BLUETOOTH COMPATIBLE CELLULAR PHONE**

OK

5	CHECK CELLULAR PHONE

(a) Check if a call can be made from the cellular phone.
HINT:
When the battery is low, registration or directory transfer cannot be done.
OK:
A call can be made from the cellular phone.

NG → **REPLACE CELLULAR PHONE**

OK

REPLACE MULTI-DISPLAY

Cellular Phone cannot Send / Receive

INSPECTION PROCEDURE

1 CHECK BLUETOOTH SETTING

(a) Check if the Bluetooth settings are correct.
OK:
Bluetooth settings are correct.

NG → **SET SETTINGS CORRECTLY**

OK

2 CHECK CELLULAR PHONE

(a) Check if the cellular phone is Bluetooth compatible.
HINT:
Some versions of Bluetooth compatible cellular phones may not function.
OK:
Phone is Bluetooth compatible.

NG → **END (ONLY A BLUETOOTH COMPATIBLE CELLULAR PHONE CAN BE USED)**

OK

3 CHECK SETTING

(a) Check if the cellular phone functions.
HINT:
The cellular phone is unable to call under any of the following conditions.
- The cellular phone is locked.
- The directory is being transferred.
- The line is crossed.
- Transmission is regulated.
- The power is OFF.
- The cellular phone is not connected to Bluetooth ("Bluetooth mark" is displayed while connected).

OK:
Above conditions do not exist.

NG → **SET CORRECTLY**

OK

4 CHECK CELLULAR PHONE

(a) Check if the cellular phone can call.

HINT:
When the battery is low, calls cannot be made or received.
OK:
Cellular phone can call.

NG → **REPLACE CELLULAR PHONE**

OK

5	**CHECK RECEPTION**

(a) Set the cellular phone so that it can receive calls.
(b) Place the cellular phone close to the multi-display.
(c) Check if the cellular phone has reception according to the multi-display.
OK:
Cellular phone has reception.

NG → **REPLACE MULTI-DISPLAY**

OK

PROCEED TO NEXT INSPECTION PROCEDURE SHOWN IN PROBLEM SYMPTOMS TABLE

Cannot Call in a Certain Place

INSPECTION PROCEDURE

1 CHECK SURROUNDING CONDITION

(a) Check if the cellular phone can make calls in a certain location.
OK:
It can make calls.

NG → **END (CELLULAR PHONES CAN ONLY FUNCTION IN CELLULAR SERVICE AREAS)**

OK ↓

2 CHECK RECEPTION

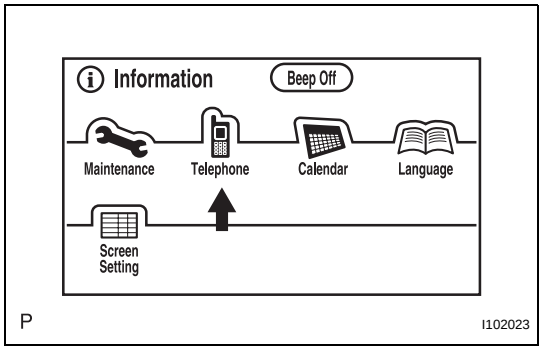

(a) Enter the "Information" screen by pressing the "INFO" switch.
(b) Select "Telephone".

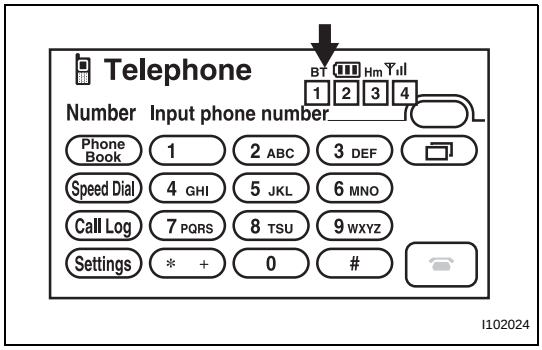

(c) Check the "BT" mark.
Result

Condition	Proceed to
Yellow color	A
Blue color	B
No connection mark is displayed	C

B → **REPLACE MULTI-DISPLAY**

C → **SELECT A REGISTERED CELLULAR PHONE OR REGISTER A BLUETOOTH COMPATIBLE PHONE**

A ↓

BRING CELLULAR PHONE TO LOCATION WHERE THE BT MARK TURNS BLUE

NS

The Other Caller's Voice cannot be Heard, is too Quiet, or Distorted

INSPECTION PROCEDURE

1 CHECK CELLULAR PHONE

(a) Check if the voice on the other side can be heard using a cellular phone.
OK:
Voice can be heard.

NG → **REPAIR OR REPLACE CELLULAR PHONE**

OK

2 CHECK NAVIGATION SYSTEM

(a) Check that voice guidance can be heard from the driver side speaker.
OK:
Voice guidance can be heard.

NG → **GO TO "VOICE GUIDANCE DOES NOT FUNCTION" IN PROBLEM SYMPTOMS TABLE**

NS

OK

3 CHECK SETTINGS

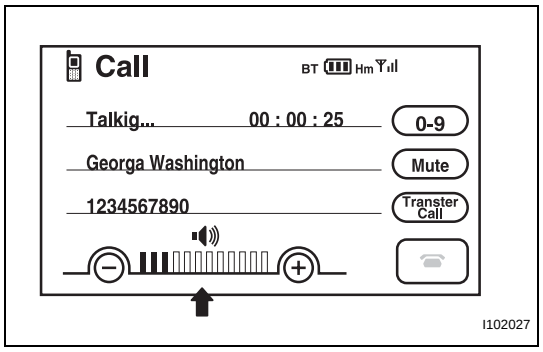

(a) Check if the volume level is set to a low level on the CALL screen.
OK:
The level is not low.

NG → **SET VOLUME TO HIGH**

OK

4	CHECK SETTINGS

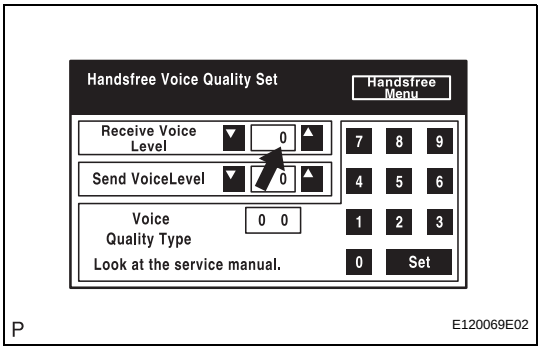

(a) Enter the "Handsfree Voice Quality Set" mode (see page NS-21).

(b) Check if the Receive Voice Level is set to "0".
HINT:
The Receive Voice Level can be set to 11 different levels, -5 to +5, with a 3 dB difference.

(c) Check if the Receive Voice Level is set to the minimum or maximum level.
HINT:
When the Receive Voice Level is set to the minimum or maximum level, the sound may be distorted.
OK:
The Receive Voice Level is set to "0".

NG → **SET RECEIVE VOICE LEVEL TO "0"**

OK

PROCEED TO NEXT INSPECTION PROCEDURE SHOWN IN PROBLEM SYMPTOMS TABLE

The Other Caller cannot Hear Your Voice, or Your Voice is too Quiet or Distorted

INSPECTION PROCEDURE

1 CHECK CELLULAR PHONE

(a) Check if the other side can hear your voice properly.
OK:
Your voice can be heard correctly.

NG → **REPLACE CELLULAR PHONE**

OK

2 CHECK SETTINGS

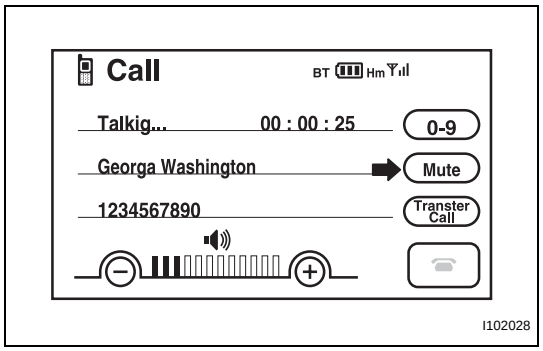

(a) Check if the mute switch is set to ON.
OK:
Mute switch is not set to ON.

NG → **TURN MUTE SWITCH OFF**

NS

OK

3 CHECK SETTINGS

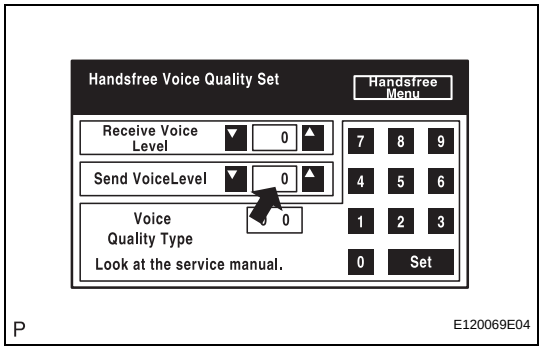

(a) Enter the "Handsfree Voice Quality Set" mode (see page NS-21).
(b) Check if the Send Voice Level is set to "0".
HINT:
The Send Voice Level can be set to 11 different levels, -5 to +5, with a 3 dB difference.
(c) Check if the Send Voice Level is set to the minimum or maximum level.
HINT:
When the Send Voice Level is set to the minimum or maximum level, the sound may be distorted.
OK:
The Send Voice Level is set to "0".

NG → **SET SEND VOICE LEVEL TO "0"**

OK

4	CHECK MICROPHONE (DISPLAY CHECK MODE)

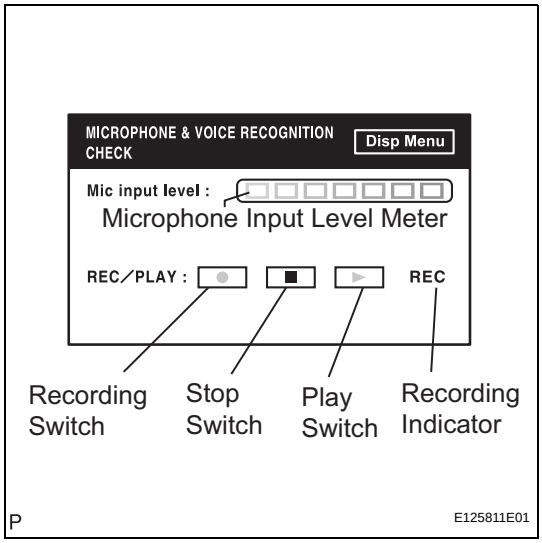

(a) Enter the "MICROPHONE & VOICE RECOGNITION CHECK" mode (see page NS-18).

(b) When a voice is input into the microphone, check that the microphone input level meter changes according to the input voice.

(c) Push the recording switch and perform voice recording.
HINT:
The recording limit is 5 seconds.

(d) Check that the recording indicator remains on while recording and that the recorded voice is played normally without noise or distortion.
OK:
All check results are normal.

NG → **PROCEED TO NEXT INSPECTION PROCEDURE SHOWN IN PROBLEM SYMPTOMS TABLE**

OK →

NS

REPLACE MULTI-DISPLAY

Steering Pad Switch Circuit

DESCRIPTION

This circuit sends an operation signal from the steering pad switch to the radio receiver.
If there is an open in the circuit, the navigation system cannot be operated using the steering pad switch.
If there is a short in the circuit, the resulting condition is the same as if the switch were continuously depressed. Therefore, the navigation system cannot be operated using the steering pad switch, and the navigation system itself cannot function.

WIRING DIAGRAM

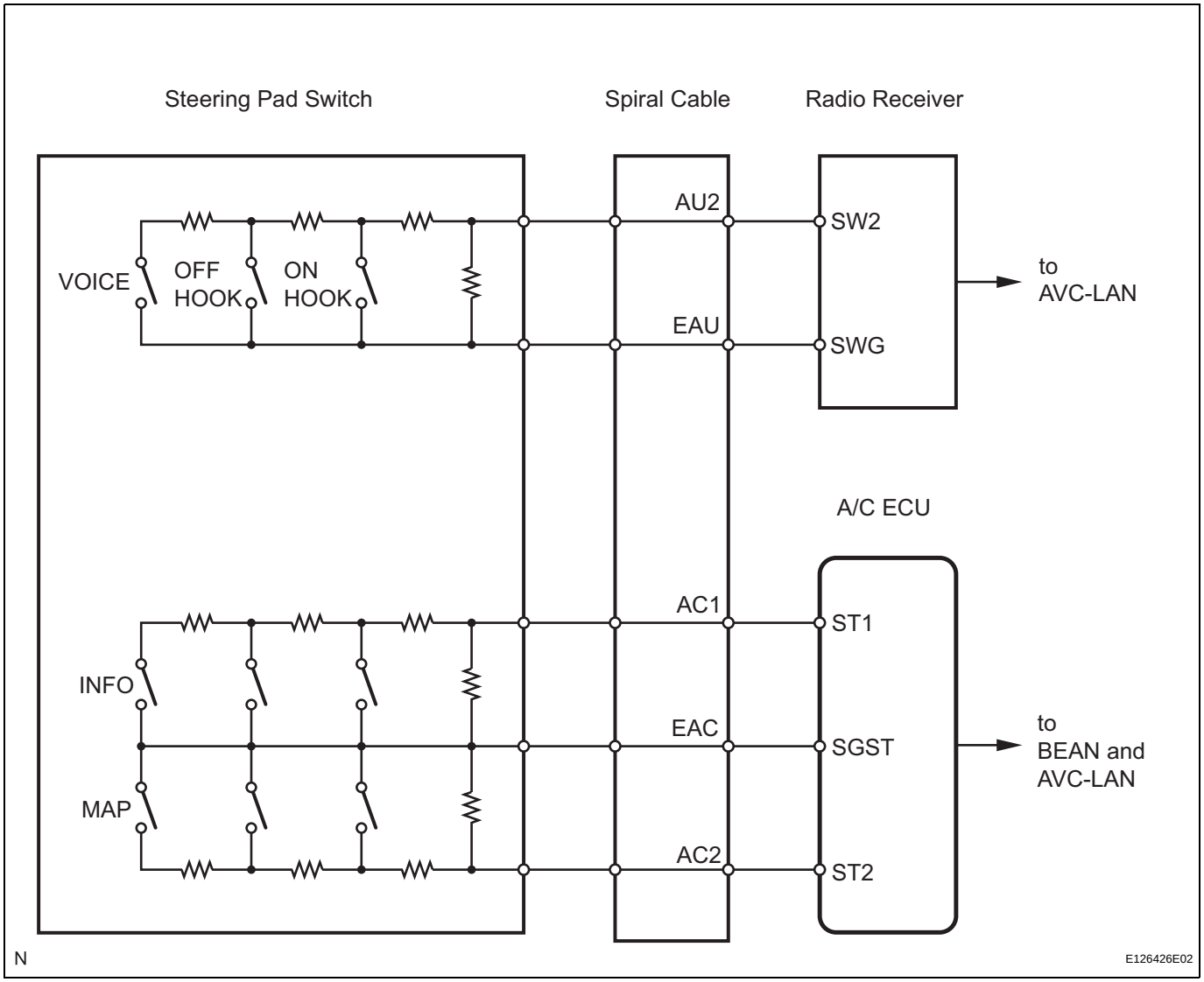

INSPECTION PROCEDURE

NOTICE:

The vehicle is equipped with an SRS (Supplemental Restraint System) which includes components such as airbags. Before servicing (including removal or installation of parts), be sure to read the precautionary notice for the Supplemental Restraint System (see page RS-22).

NS

1	INSPECT STEERING PAD SWITCH ASSEMBLY

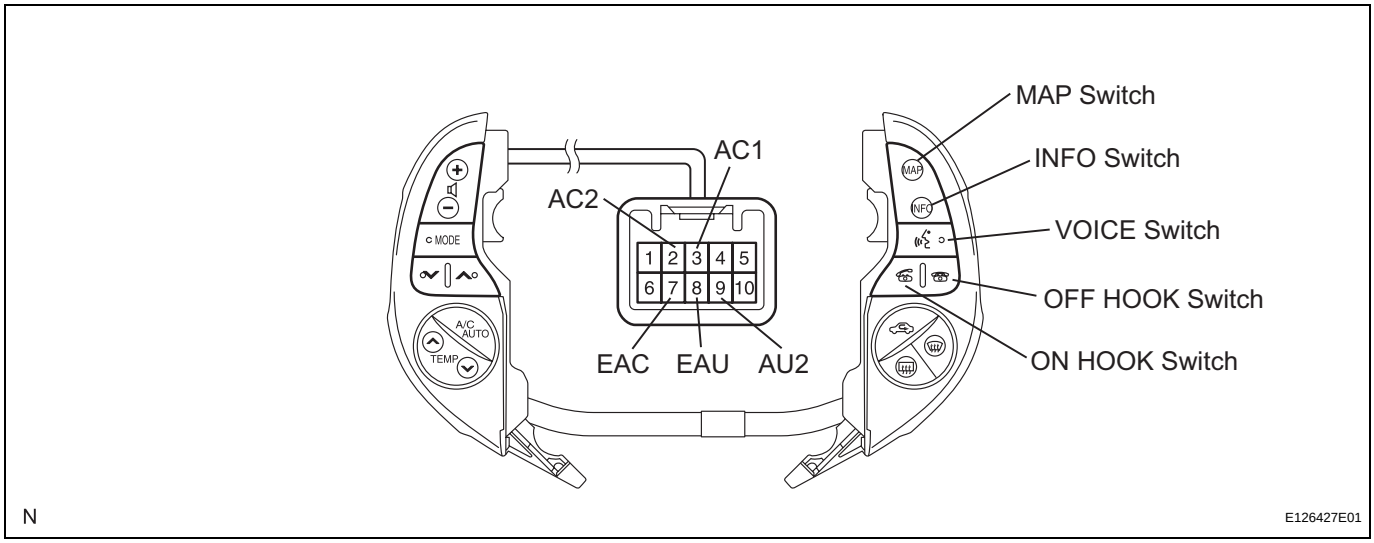

(a) Disconnect the switch connector.
(b) Measure the resistance of the switch.

Standard resistance

Tester connection	Condition	Specified condition
9 (AU2) - 8 (EAU)	No switch is pushed	100 kΩ or higher
9 (AU2) - 8 (EAU)	VOICE switch pushed	3,110 Ω
9 (AU2) - 8 (EAU)	ON HOOK switch pushed	329 Ω
9 (AU2) - 8 (EAU)	OFF HOOK switch pushed	1,000 Ω
3 (AC1) - 7 (EAC)	Not pushed	30 kΩ or higher
3 (AC1) - 7 (EAC)	INFO switch pushed	3,062 Ω
2 (AC2) - 7 (EAC)	Not pushed	30 kΩ or higher
2 (AC2) - 7 (EAC)	MAP switch pushed	3,062 Ω

NG → **REPLACE STEERING PAD SWITCH ASSEMBLY**

OK

NS

2 INSPECT SPIRAL CABLE

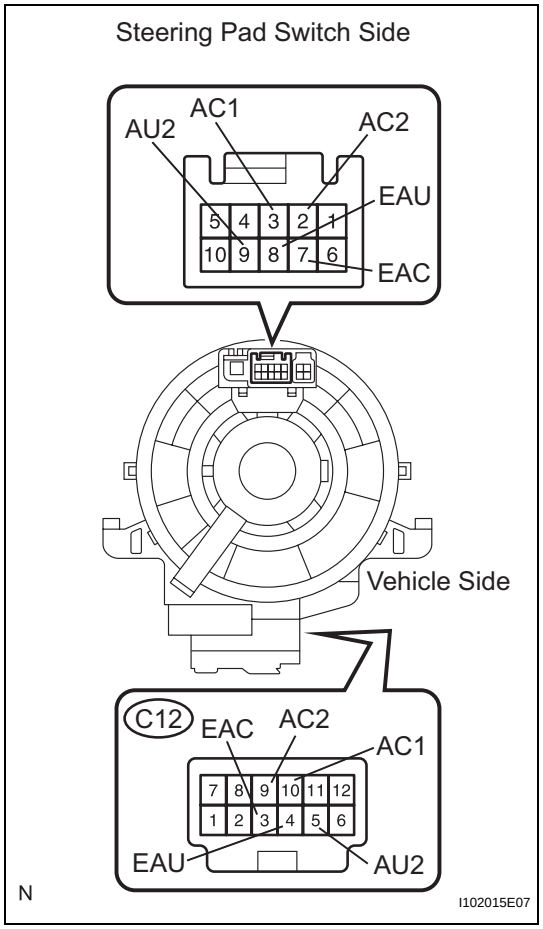

(a) Disconnect the cable connectors.
(b) Measure the resistance of the cable.
Standard resistance

Tester connection	Spiral Cable Position	Specified condition
C12-4 (EAU) - 8 (EAU)	Center	Below 1 Ω
	2.5 rotations to the left	
	2.5 rotations to the right	
C12-5 (AU2) - 9 (AU2)	Center	Below 1 Ω
	2.5 rotations to the left	
	2.5 rotations to the right	
C12-3 (EAC) - 7 (EAC)	Center	Below 1 Ω
	2.5 rotations to the left	
	2.5 rotations to the right	
C12-9 (AC2) - 2 (AC2)	Center	Below 1 Ω
	2.5 rotations to the left	
	2.5 rotations to the right	
C12-10 (AC1) - 3 (AC1)	Center	Below 1 Ω
	2.5 rotations to the left	
	2.5 rotations to the right	

NOTICE:
The spiral cable is an important part of the SRS airbag system. Incorrect removal or installation of the spiral cable may prevent the airbag from deploying. Be sure to read the page shown in the brackets (see page RS-22).

NS

NG → **REPLACE SPIRAL CABLE SUB-ASSEMBLY**

OK

3 CHECK WIRE HARNESS (SPIRAL CABLE - RADIO RECEIVER)

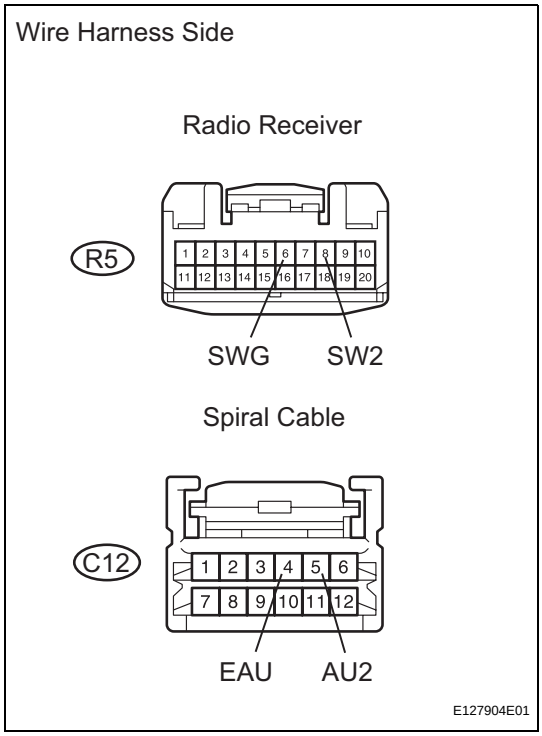

(a) Disconnect the R5 receiver connector.
(b) Disconnect the C12 cable connector.
(c) Measure the resistance of the wire harness side connectors.

Standard resistance

Tester Connection	Specified Condition
R5-8 (SW2) - C12-5 (AU2)	Below 1 Ω
R5-6 (SWG) - C12-4 (EAU)	Below 1 Ω
R5-8 (SW2) - Body ground	10 kΩ or higher
R5-6 (SWG) - Body ground	10 kΩ or higher

NG → **REPAIR OR REPLACE HARNESS AND CONNECTOR**

OK

4 CHECK WIRE HARNESS (SPIRAL CABLE - AIR CONDITIONING AMPLIFIER)

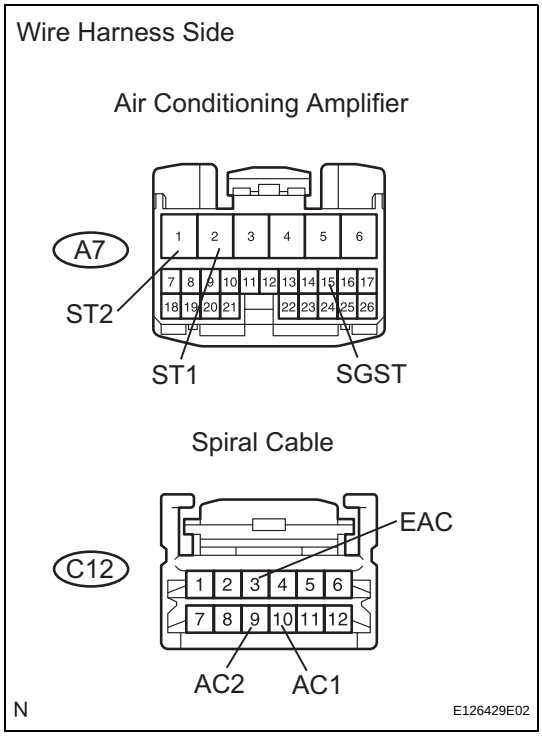

(a) Disconnect the A7 amplifier connector.
(b) Disconnect the C12 cable connector.
(c) Measure the resistance of the wire harness side connectors.

Standard resistance

Tester Connection	Specified Condition
A7-2 (ST1) - C12-10 (AC1)	Below 1 Ω
A7-15 (SGST) - C12-3 (EAC)	Below 1 Ω
A7-1 (ST2) - C12-9 (AC2)	Below 1 Ω
A7-2 (ST1) - Body ground	10 kΩ or higher
A7-15 (SGST) - Body ground	10 kΩ or higher
A7-1 (ST2) - Body ground	10 kΩ or higher

NG → **REPAIR OR REPLACE HARNESS AND CONNECTOR**

OK

PROCEED TO NEXT INSPECTION PROCEDURE SHOWN IN PROBLEM SYMPTOMS TABLE

Illumination Circuit

DESCRIPTION

Power is supplied to the multi-display and steering pad switch illumination when the light control switch is in the TAIL or HEAD position.

WIRING DIAGRAM

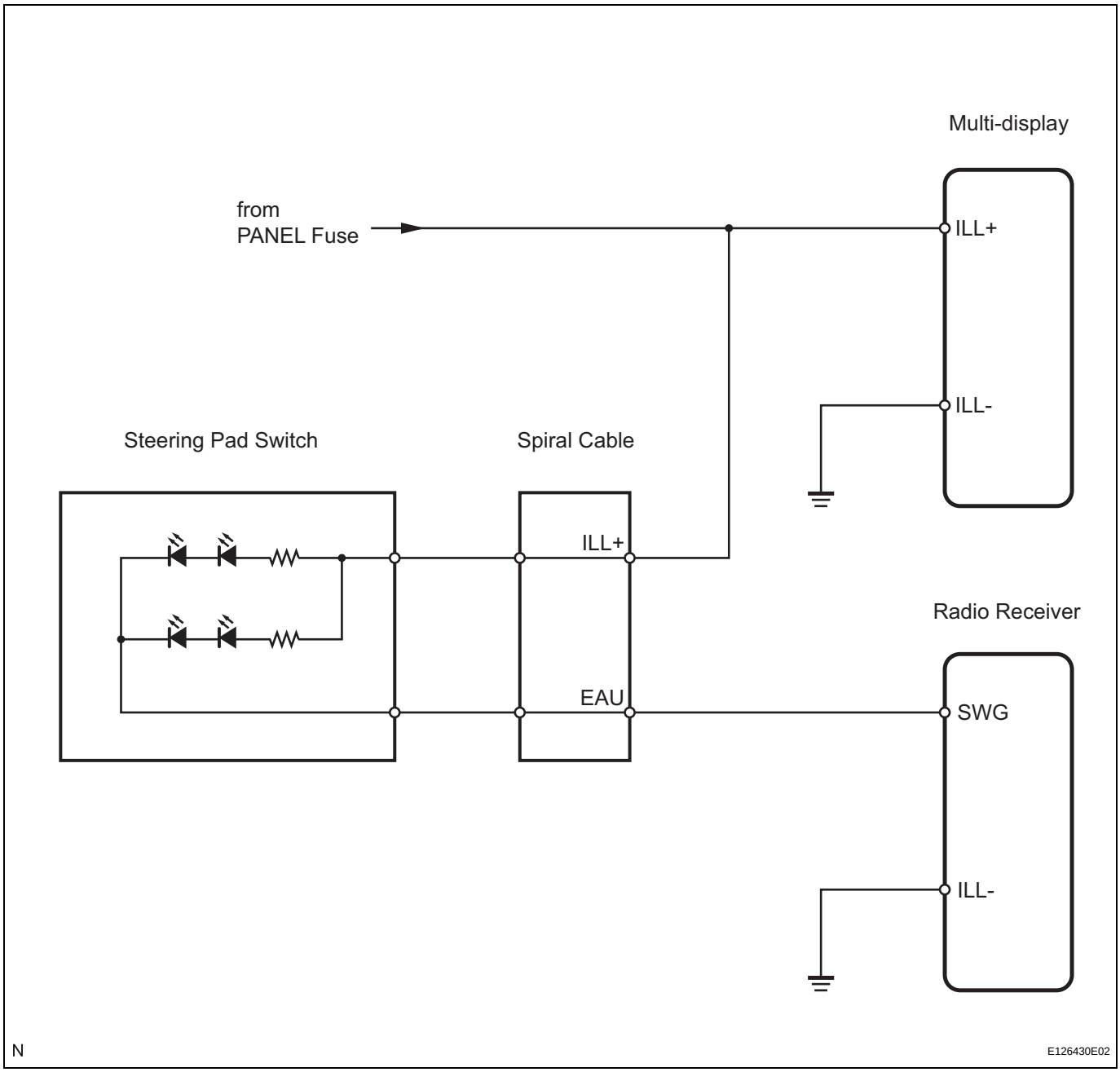

INSPECTION PROCEDURE

NOTICE:

The vehicle is equipped with an SRS (Supplemental Restraint System) which includes components such as airbags. Before servicing (including removal or installation of parts), be sure to read the precautionary notice for the Supplemental Restraint System (see page RS-22).

1 CHECK WIRE HARNESS (SPIRAL CABLE - BATTERY)

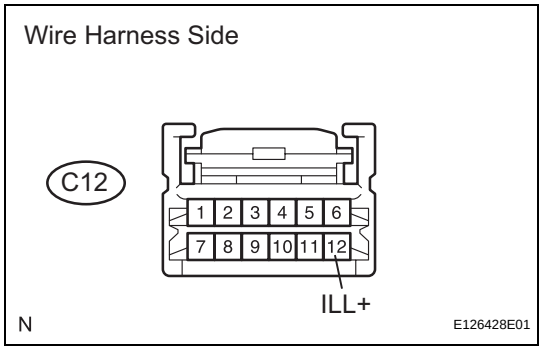

(a) Disconnect the C12 cable connector.
(b) Measure the voltage of the wire harness side connector.
Standard voltage

Tester connection	Condition	Specified condition
C12-12 (ILL+) - Body ground	Light control switch TAIL or HEAD	10 to 14 V

NG → **REPAIR OR REPLACE HARNESS AND CONNECTOR**

OK

2 CHECK STEERING PAD SWITCH ASSEMBLY

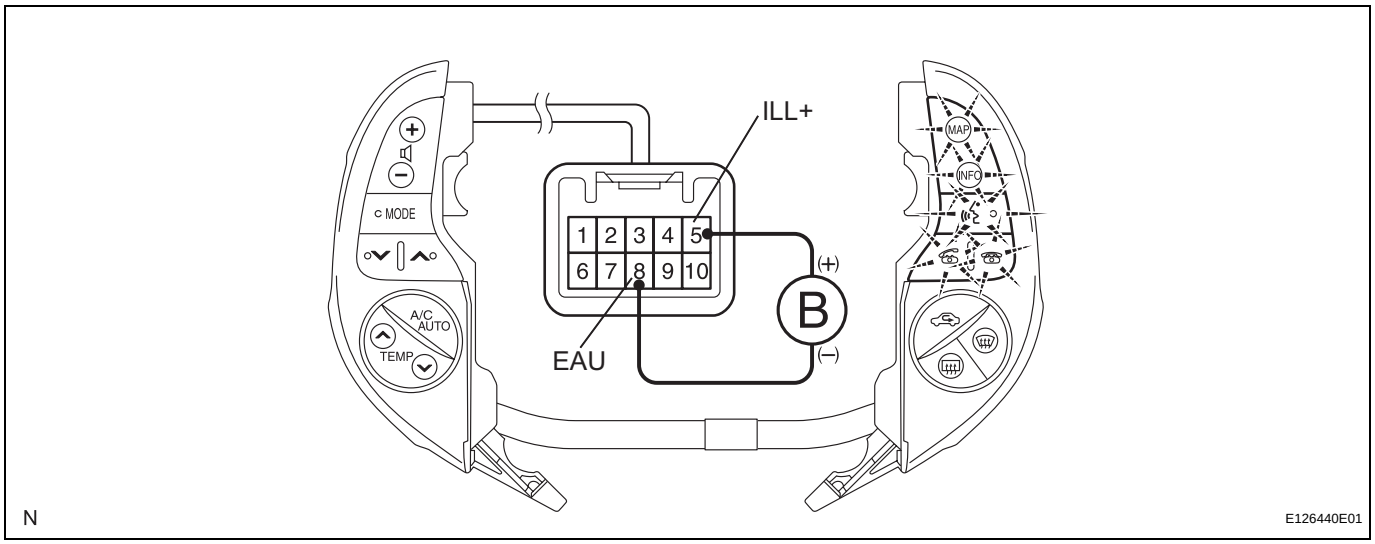

(a) Disconnect the switch connector.
(b) Connect the positive (+) lead to terminal 5 (ILL+) and the negative (-) lead to terminal 8 (EAU) of the steering pad switch connector.
(c) Check if the illumination for the steering pad switch comes on.
OK:
Illumination for the steering pad switch assembly comes on.

NG → **REPLACE STEERING PAD SWITCH ASSEMBLY**

OK

NS

3	INSPECT SPIRAL CABLE

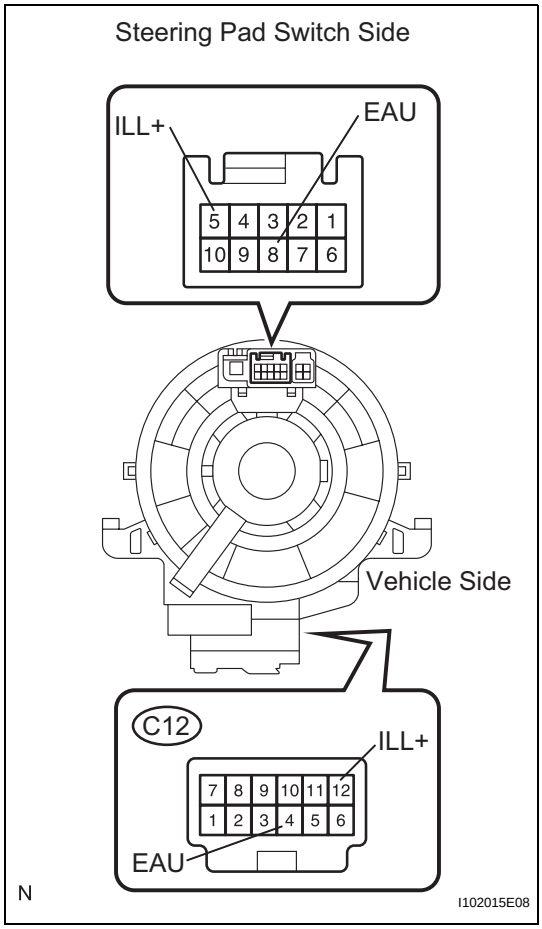

(a) Disconnect the cable connectors.
(b) Measure the resistance of the cable.
Standard resistance

Tester Connection	Spiral Cable Position	Specified Condition
C12-4 (EAU) - 8 (EAU)	Center	Below 1 Ω
	2.5 rotations to the left	
	2.5 rotations to the right	
C12-12 (ILL+) - 5 (ILL+)	Center	Below 1 Ω
	2.5 rotations to the left	
	2.5 rotations to the right	

NOTICE:
The spiral cable is an important part of the SRS airbag system. Incorrect removal or installation of the spiral cable may prevent the airbag from deploying. Be sure to read the page shown in the brackets (see page RS-22).

NG → **REPLACE SPIRAL CABLE SUB-ASSEMBLY**

OK

NS

4 CHECK WIRE HARNESS (RADIO RECEIVER - SPIRAL CABLE AND BODY GROUND)

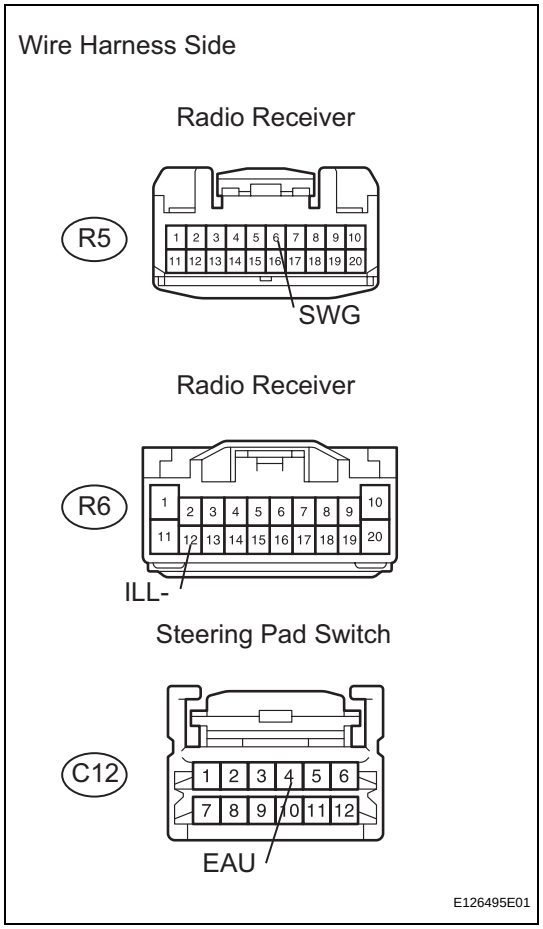

(a) Disconnect the R5 and R6 receiver connectors.
(b) Disconnect the C12 cable connector.
(c) Measure the resistance of the wire harness side connectors.

Standard resistance

Tester connection	Specified condition
R5-6 (SWG) - C12-4 (EAU)	Below 1 Ω
R6-12 (ILL-) - Body ground	10 kΩ or higher

NG → **REPAIR OR REPLACE HARNESS AND CONNECTOR**

OK

5 CHECK WIRE HARNESS (MULTI-DISPLAY - BATTERY AND BODY GROUND)

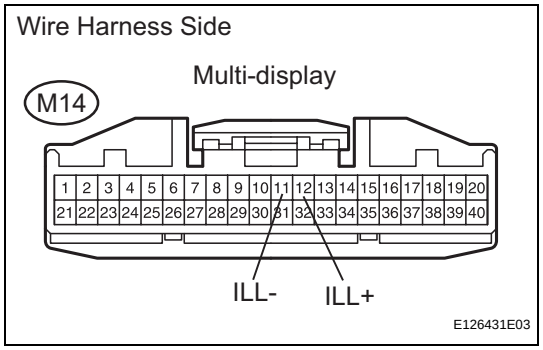

(a) Disconnect the M14 display connector.
(b) Measure the voltage and resistance of the wire harness side connector.

Standard voltage

Tester Connection	Condition	Specified Condition
M14-11 (ILL+) - Body ground	Light control switch TAIL or HEAD	10 to 14 V

Standard resistance

Tester Connection	Specified Condition
M14-12 (ILL-) - Body ground	Below 1 Ω

NG → **REPAIR OR REPLACE HARNESS AND CONNECTOR**

NS

OK

PROCEED TO NEXT INSPECTION PROCEDURE SHOWN IN PROBLEM SYMPTOMS TABLE

AVC-LAN Circuit

DESCRIPTION

Each unit of the navigation system connected to the AVC-LAN (communication bus) transfers the signal of each switch by communication.
When a short to +B or short to ground occurs in this AVC-LAN, the navigation system will not function normally as the communication is discontinued.

INSPECTION PROCEDURE

1 CHECK RADIO RECEIVER ASSEMBLY

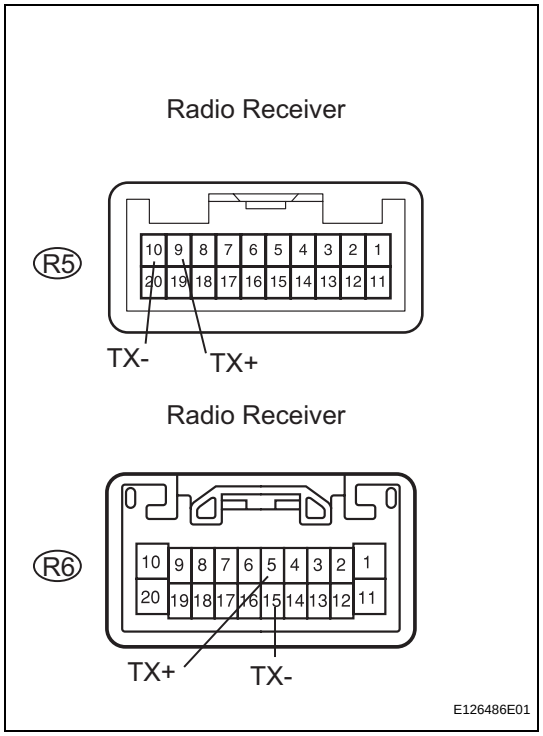

(a) Disconnect the R5 and R6 receiver connectors.
(b) Measure the resistance of the receiver.
Standard resistance

Tester Connection	Specified Condition
R6-5 (TX+) - R6-15 (TX-)	60 to 80 Ω
R5-9 (TX+) - R5-10 (TX-)	60 to 80 Ω

NG → **REPLACE RADIO RECEIVER ASSEMBLY**

OK

2 CHECK WIRE HARNESS

HINT:
For details of the connectors, refer to "TERMINALS OF ECU" (see page NS-40).

(a) Referring to the AVC-LAN wiring diagram below, check all AVC-LAN circuits.
  (1) Disconnect all connectors in all AVC-LAN circuits.
  (2) Check for an open or short in all AVC-LAN circuits.
  OK:
  There is no open or short circuit.

NS

AVC-LAN Wiring Diagram

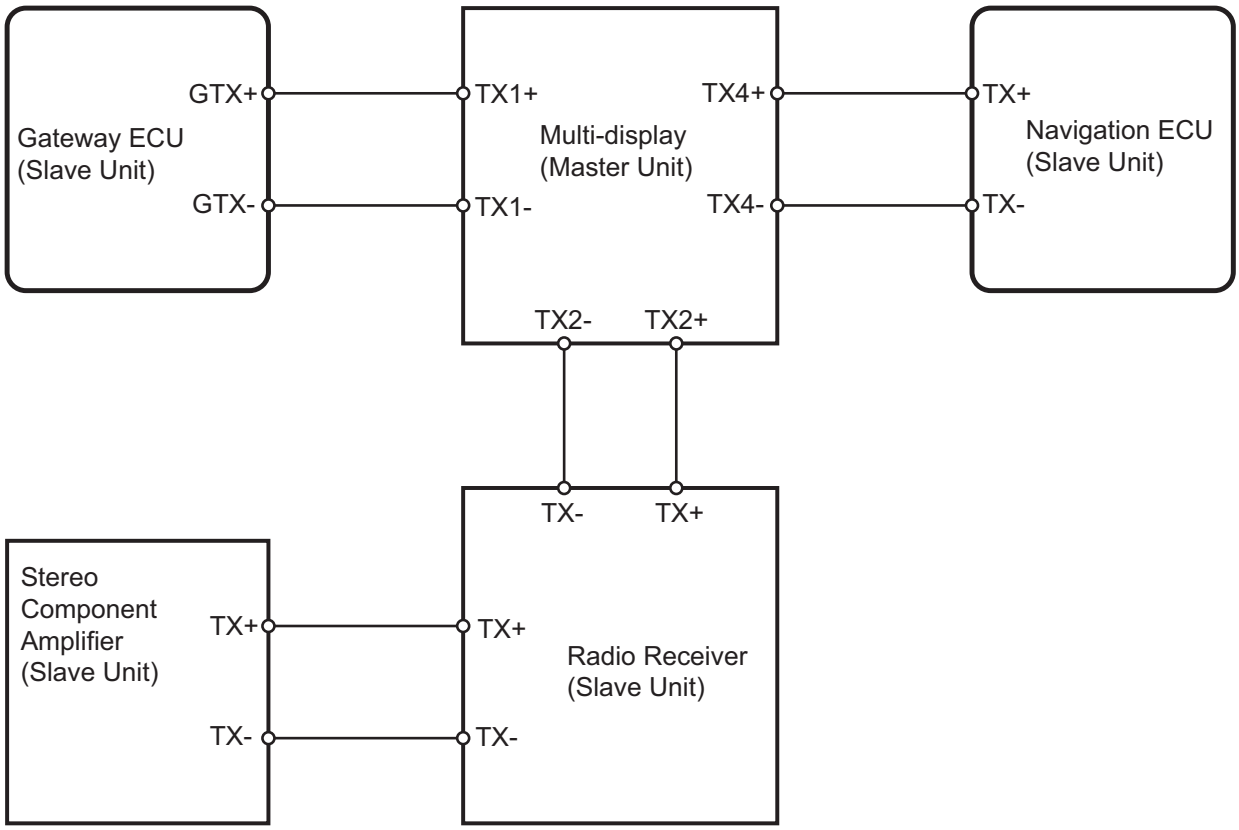

N

E126411E03

NG → **REPAIR OR REPLACE HARNESS AND CONNECTOR**

OK

PROCEED TO NEXT INSPECTION PROCEDURE SHOWN IN PROBLEM SYMPTOMS TABLE

NS

Vehicle Speed Signal Circuit between Navigation ECU and Combination Meter

DESCRIPTION

This circuit sends a speed signal from combination meter to the navigation ECU.

WIRING DIAGRAM

INSPECTION PROCEDURE

1	CHECK OPERATION OF SPEEDOMETER

NS

(a) Drive the vehicle and check if the function of the speedometer in the combination meter is normal.
OK:
Actual vehicle speed and the speed indicated on the speedometer are the same.
HINT:
The vehicle speed sensor is functioning normally when the indication on the speedometer is normal.

NG → **GO TO METER / GAUGE SYSTEM**

OK

2	CHECK WIRE HARNESS (NAVIGATION ECU - COMBINATION METER)

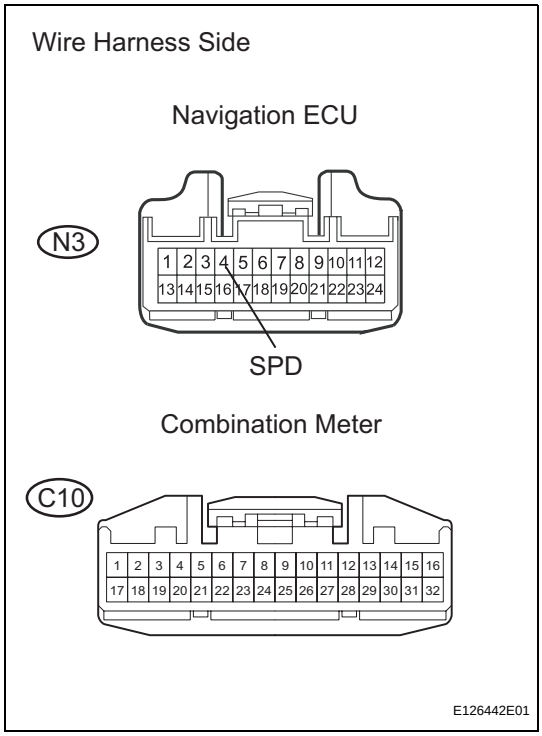

(a) Disconnect the N3 ECU connector.
(b) Disconnect the C10 meter connector.
(c) Measure the resistance of the wire harness side connectors.

Standard resistance

Tester Connection	Specified Condition
N3-4 (SPD) - C10-13	Below 1 Ω

NG → **REPAIR OR REPLACE HARNESS AND CONNECTOR**

OK

PROCEED TO NEXT INSPECTION PROCEDURE SHOWN IN PROBLEM SYMPTOMS TABLE

Vehicle Speed Signal Circuit between Multi-display and Combination Meter

DESCRIPTION

The multi-display performs switch operation control during driving by receiving a vehicle speed signal from the combination meter.

WIRING DIAGRAM

INSPECTION PROCEDURE

1	CHECK OPERATION OF SPEEDOMETER

(a) Drive the vehicle and check if the function of the speedometer in the combination meter is normal.
OK:
Actual vehicle speed and the speed indicated on the speedometer are the same.
HINT:
The vehicle speed sensor is functioning normally when the indication on the speedometer is normal.

NG → **GO TO METER / GAUGE SYSTEM**

OK

2 CHECK WIRE HARNESS (COMBINATION METER - MULTI-DISPLAY)

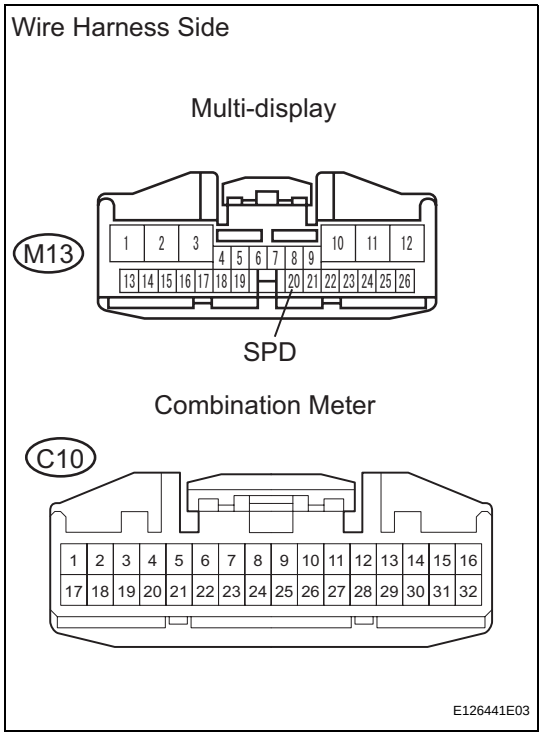

(a) Disconnect the M13 display connector.
(b) Disconnect the C10 meter connector.
(c) Measure the resistance of the wire harness side connectors.

Standard resistance

Tester connection	Specified condition
M13-20 (SPD) - C10-13	Below 1 Ω

NG → **REPAIR OR REPLACE HARNESS AND CONNECTOR**

OK

PROCEED TO NEXT INSPECTION PROCEDURE SHOWN IN PROBLEM SYMPTOMS TABLE

NS

Reverse Signal Circuit

DESCRIPTION

The navigation ECU receives a reverse signal from the BK/UP LP relay and information about the GPS antenna, and then adjusts vehicle position.

WIRING DIAGRAM

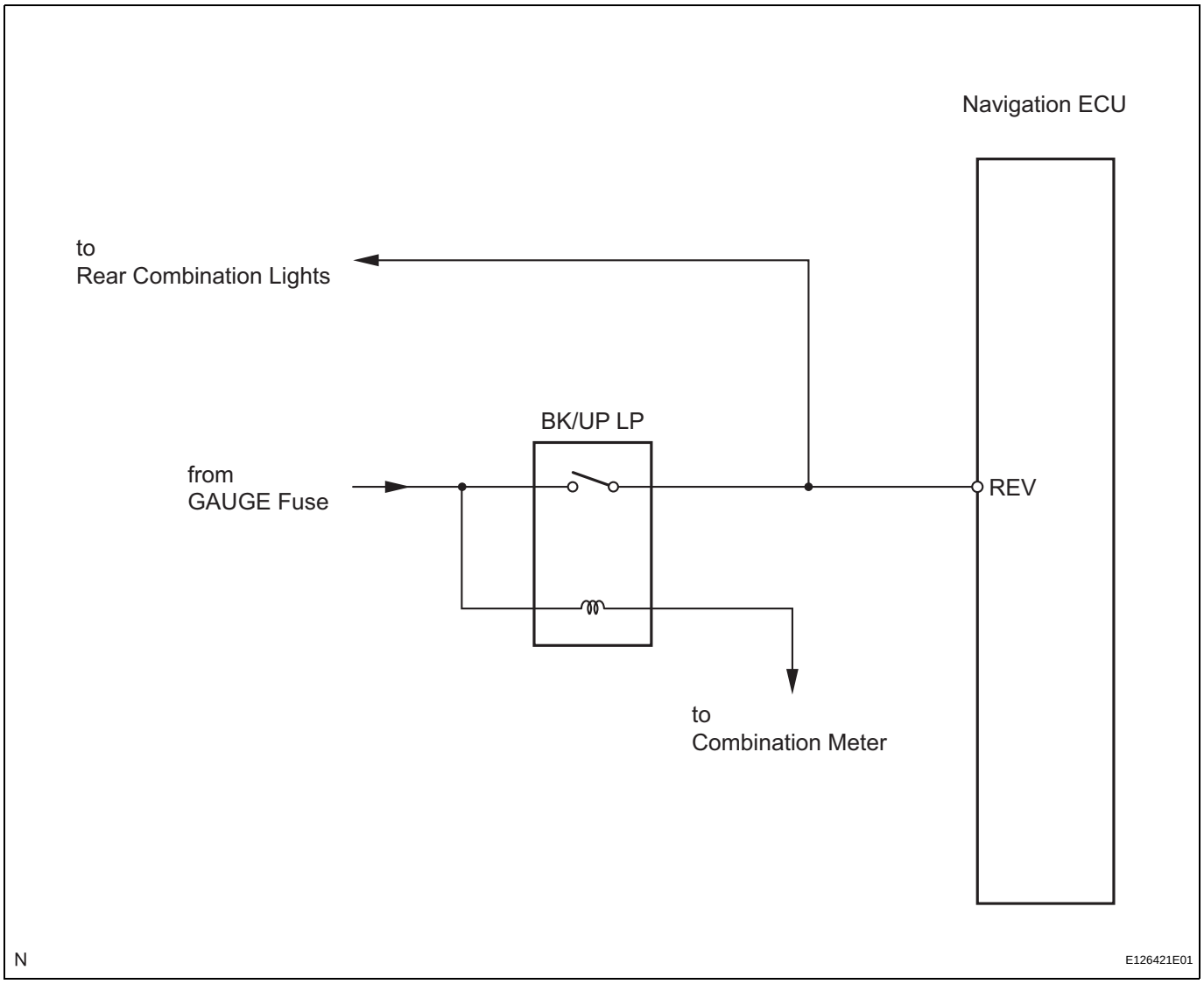

INSPECTION PROCEDURE

1	CHECK BACK-UP LIGHT

(a) Move the shift lever to the R position and check if the back-up lights turn on.
OK:
The back-up lights turn on.

NG	GO TO LIGHTING SYSTEM

NS

OK

2 CHECK VEHICLE SIGNAL (DISPLAY CHECK MODE)

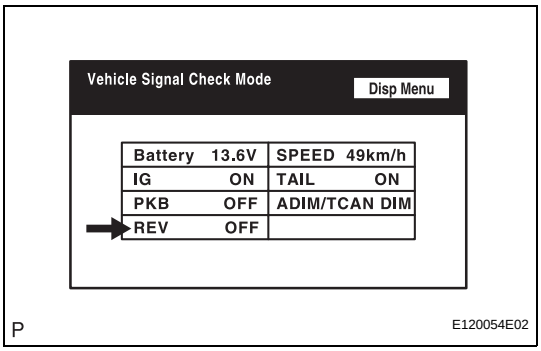

(a) Enter the "Display Check" mode (Vehicle Signal Check Mode) (see page NS-18).
(b) Check that the display changes between ON and OFF according to the shift lever operation (P and R).
OK

Shift Lever Position	Display
Reverse	ON
Except Reverse	OFF

HINT:
This display is updated once per seconds. As a result, it is normal for the display to lag behind the actual change in the switch.

OK → **REPLACE NAVIGATION ECU**

NG

NS

3 CHECK WIRE HARNESS (BK/UP LP RELAY - NAVIGATION ECU AND BODY GROUND)

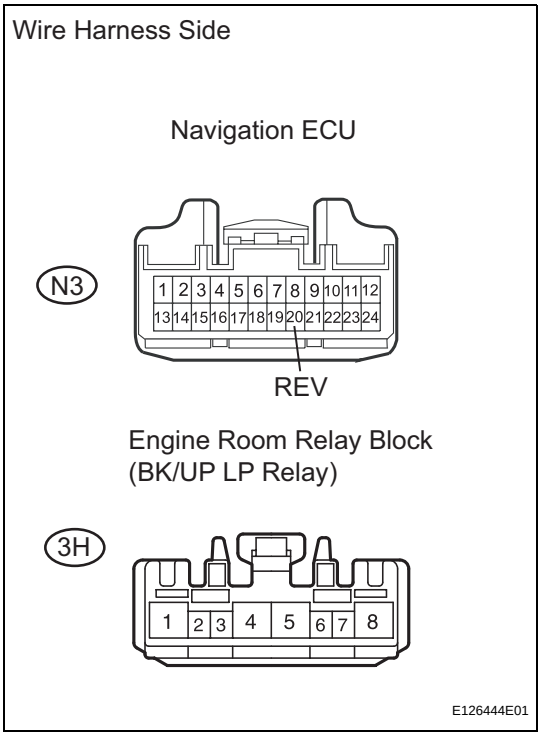

(a) Disconnect the N3 ECU connector.
(b) Disconnect the 3H engine room relay block connector.
(c) Measure the resistance of the wire harness side connectors.
Standard resistance

Tester Connection	Specified Condition
N3-20 (REV) - 3H-8	Below 1 Ω
N3-20 (REV) - Body ground	10 kΩ or higher

NG → **REPAIR OR REPLACE HARNESS AND CONNECTOR**

OK

PROCEED TO NEXT INSPECTION PROCEDURE SHOWN IN PROBLEM SYMPTOMS TABLE

Navigation Voice Speaker Circuit

DESCRIPTION

This circuit is used when the voice guidance in the navigation system is on.

WIRING DIAGRAM

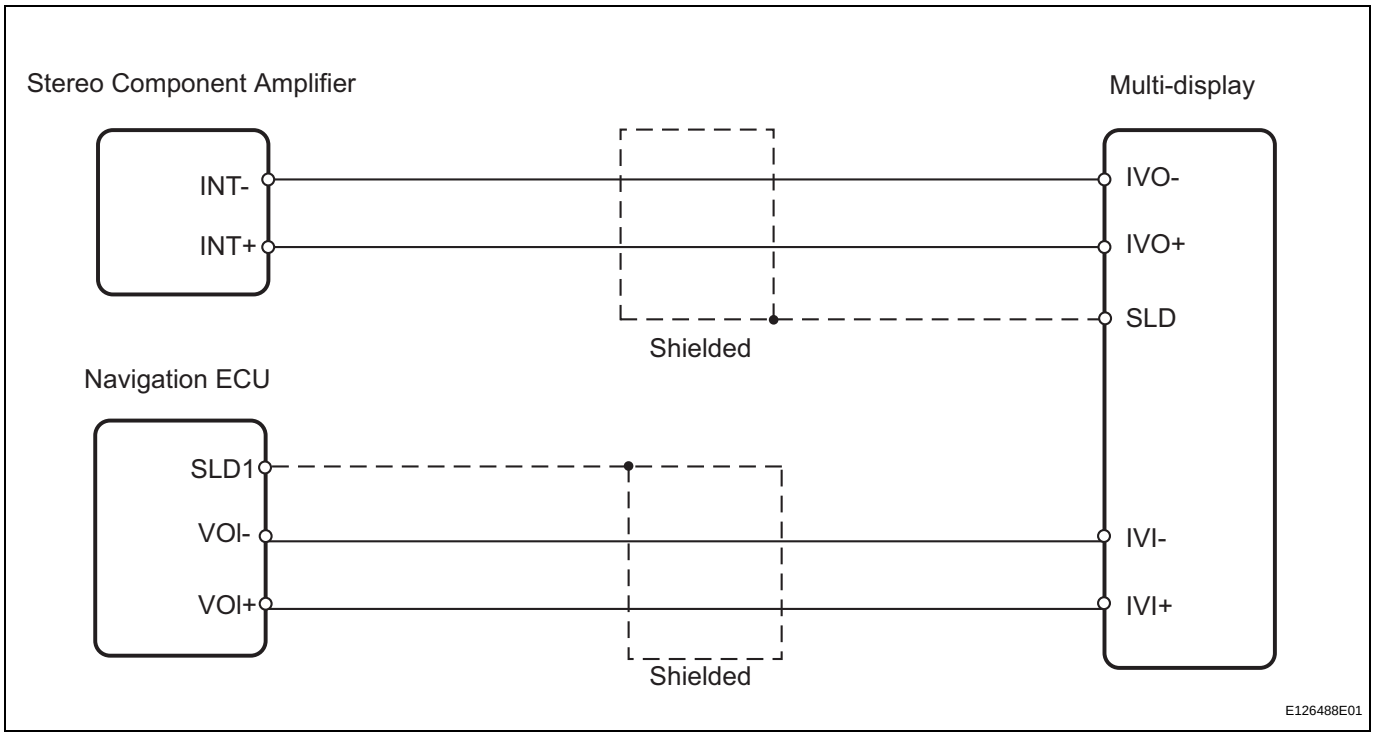

INSPECTION PROCEDURE

1 CHECK WIRE HARNESS (MULTI-DISPLAY - NAVIGATION ECU)

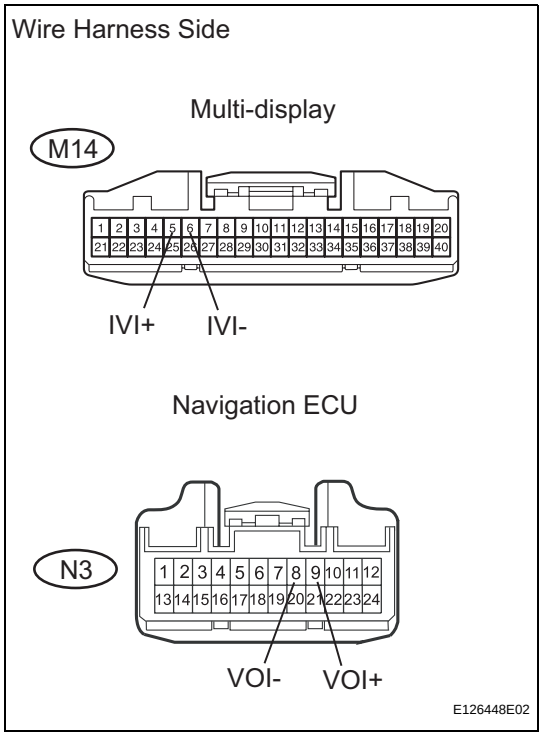

(a) Disconnect the M14 display connector.
(b) Disconnect the N3 ECU connector.
(c) Measure the resistance of the wire harness side connectors.
Standard resistance

Tester Connection	Specified Condition
N3-8 (VOI-) - M14-6 (IVI-)	Below 1 Ω
N3-9 (VOI+) - M14-5 (IVI+)	Below 1 Ω
N3-8 (VOI-) - Body ground	10 kΩ or higher
N3-9 (VOI+) - Body ground	10 kΩ or higher

NG → **PROCEED TO NEXT INSPECTION PROCEDURE SHOWN IN PROBLEM SYMPTOMS TABLE**

OK

2 CHECK WIRE HARNESS (MULTI-DISPLAY - STEREO COMPONENT AMPLIFIER)

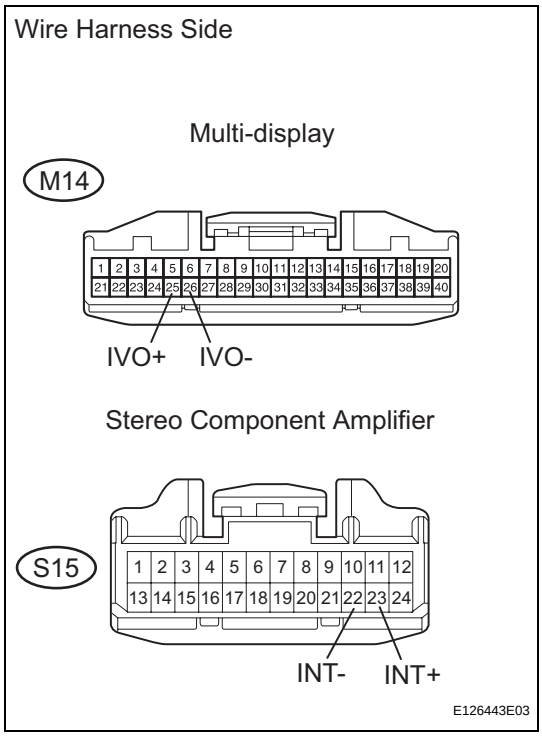

(a) Disconnect the M14 display connector.
(b) Disconnect the S15 amplifier connector.
(c) Measure the resistance of the wire harness side connectors.
Standard resistance

Tester Connection	Specified Condition
M14-25 (IVO+) - S15-23 (INT+)	Below 1 Ω
M14-26 (IVO-) - S15-22 (INT-)	Below 1 Ω
M14-25 (IVO+) - Body ground	10 kΩ or higher
M14-26 (IVO-) - Body ground	10 kΩ or higher

NG → **REPAIR OR REPLACE HARNESS AND CONNECTOR**

OK

PROCEED TO NEXT INSPECTION PROCEDURE SHOWN IN PROBLEM SYMPTOMS TABLE

Display Signal Circuit between Navigation ECU and Multi-display

DESCRIPTION

This is the display signal circuit from the navigation ECU to the multi-display.

WIRING DIAGRAM

INSPECTION PROCEDURE

NS

1 CHECK WIRE HARNESS (NAVIGATION ECU - MULTI-DISPLAY)

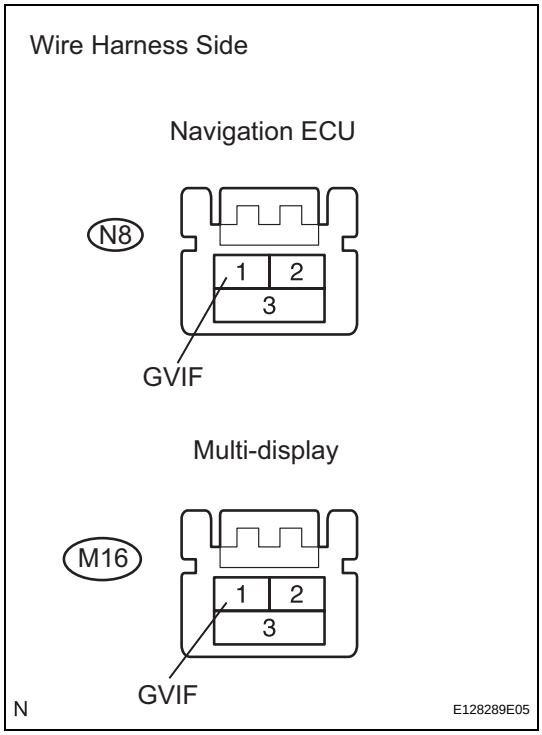

(a) Disconnect the N8 ECU connector.
(b) Disconnect the M16 display connector.
(c) Measure the resistance of the wire harness side connectors.

Standard resistance

Tester Connection	Specified Condition
N8-1 (GVIF) - M16-1 (GVIF)	Below 1 Ω
N8-1 (GVIF) - Body ground	Below 1 Ω

NG → **REPAIR OR REPLACE HARNESS AND CONNECTOR**

OK

PROCEED TO NEXT INSPECTION PROCEDURE SHOWN IN PROBLEM SYMPTOMS TABLE

Microphone Circuit between Overhead J/B and Multi-display

DESCRIPTION

This circuit sends a microphone signal from the microphone to the multi-display. It also supplies power from multi-display to the microphone.

WIRING DIAGRAM

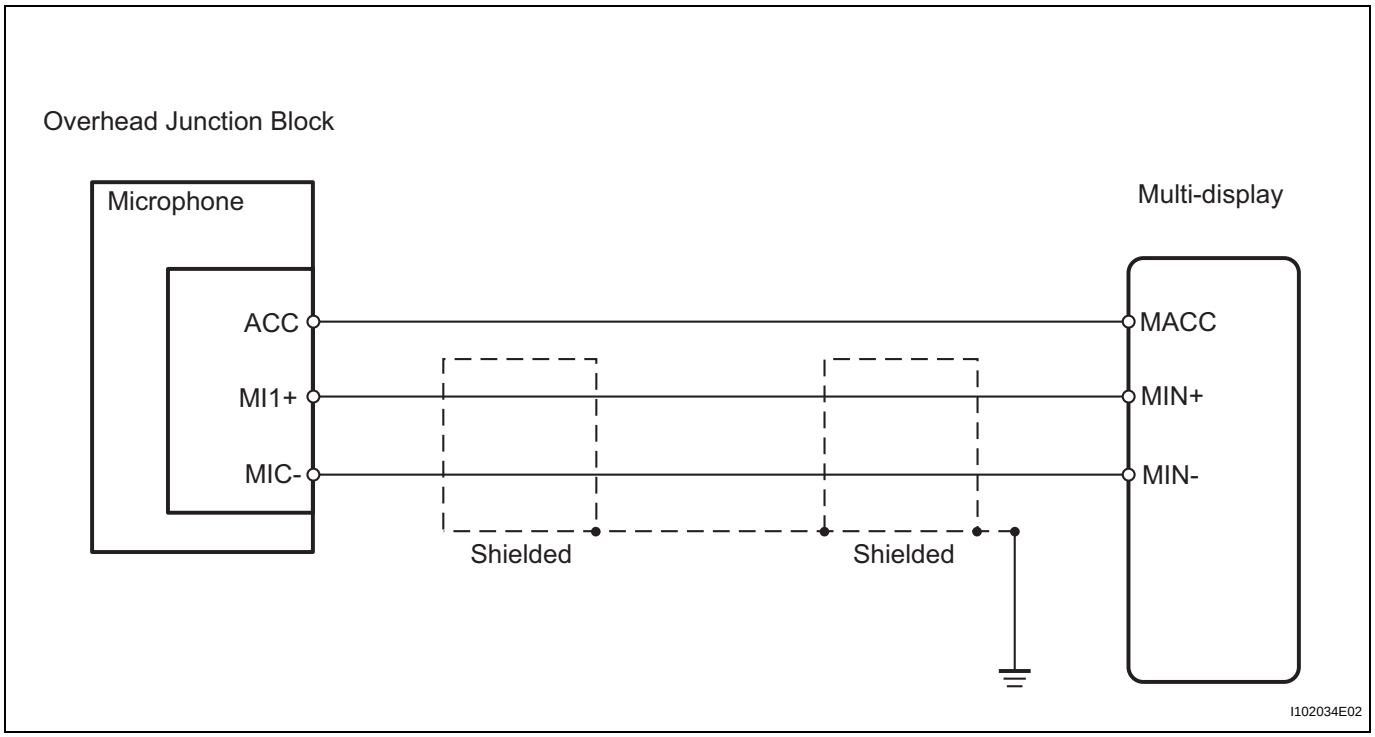

INSPECTION PROCEDURE

1	CHECK MULTI-DISPLAY (MACC VOLTAGE)

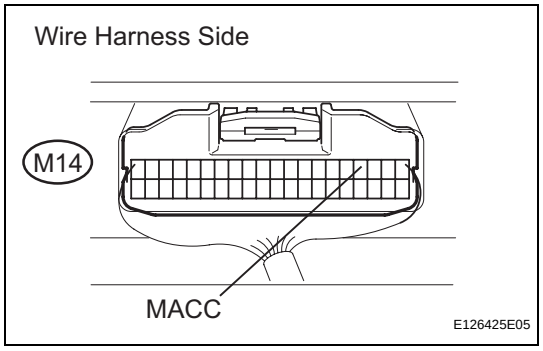

(a) Measure the voltage of the display.

Standard voltage

Tester Connection	Condition	Specified Condition
M14-4 (MACC) - Body ground	Power switch ON (ACC)	10 to 14 V

NG → **REPLACE MULTI-DISPLAY**

OK

NS

2 CHECK WIRE HARNESS (MULTI-DISPLAY - OVERHEAD JUNCTION BLOCK)

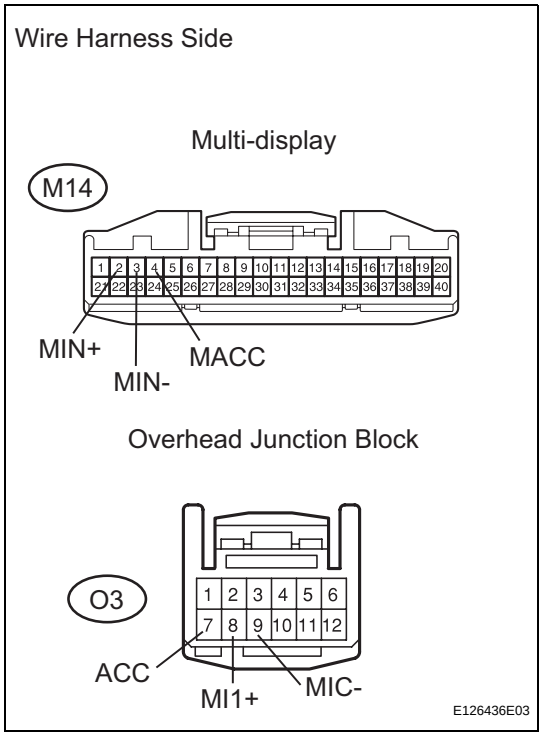

(a) Disconnect the M14 display connector.
(b) Disconnect the O3 junction block connector.
(c) Measure the resistance of the wire harness side connectors.

Standard resistance

Tester Connection	Specified Condition
M14-4 (MACC) - O3-7 (ACC)	Below 1 Ω
M14-2 (MIN+) - O3-8 (MI1+)	Below 1 Ω
M14-3 (MIN-) - O3-9 (MIC-)	Below 1 Ω
M14-4 (MACC) - Body ground	10 kΩ or higher
M14-2 (MIN+) - Body ground	10 kΩ or higher
M14-3 (MIN-) - Body ground	10 kΩ or higher

NG → **REPAIR OR REPLACE HARNESS AND CONNECTOR**

OK

PROCEED TO NEXT INSPECTION PROCEDURE SHOWN IN PROBLEM SYMPTOMS TABLE

NS

Microphone Circuit between Multi-display and Navigation ECU

DESCRIPTION

This circuit sends a microphone signal from the multi-display to the navigation ECU.

WIRING DIAGRAM

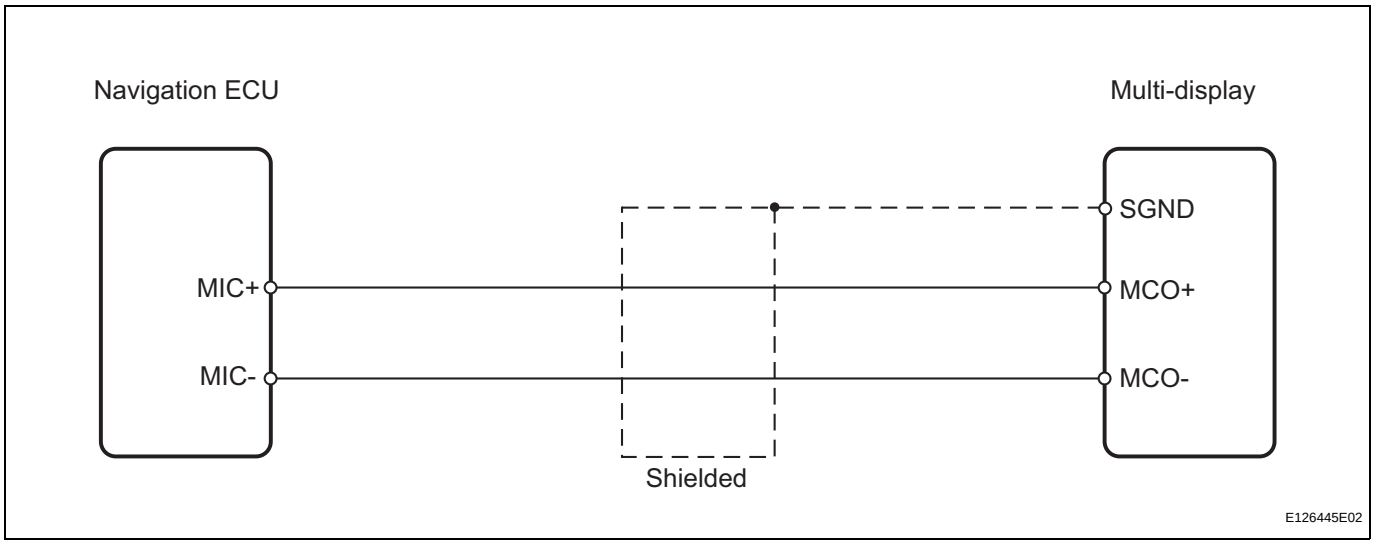

INSPECTION PROCEDURE

1	CHECK WIRE HARNESS (MULTI-DISPLAY - NAVIGATION ECU)

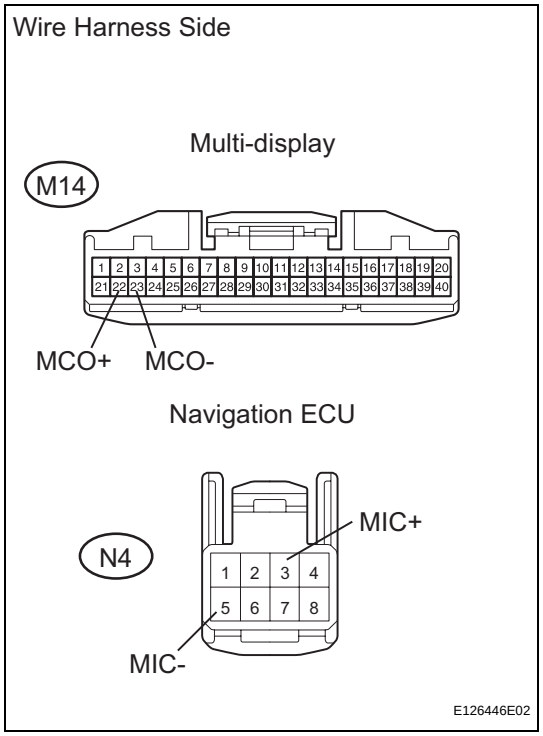

(a) Disconnect the M14 display connector.
(b) Disconnect the N4 ECU connector.
(c) Measure the resistance of the wire harness side connectors.

Standard resistance

Tester Connection	Specified Condition
M14-22 (MCO+) - N4-3 (MIC+)	Below 1 Ω
M14-23 (MCO-) - N4-5 (MIC-)	Below 1 Ω
M14-22 (MCO+) - Body ground	10 kΩ or higher
M14-23 (MCO-) - Body ground	10 kΩ or higher

NG → **REPAIR OR REPLACE HARNESS AND CONNECTOR**

OK

PROCEED TO NEXT INSPECTION PROCEDURE SHOWN IN PROBLEM SYMPTOMS TABLE

Gateway ECU Communication Error

INSPECTION PROCEDURE

1 IDENTIFY COMPONENT SHOWN BY SUB-CODE

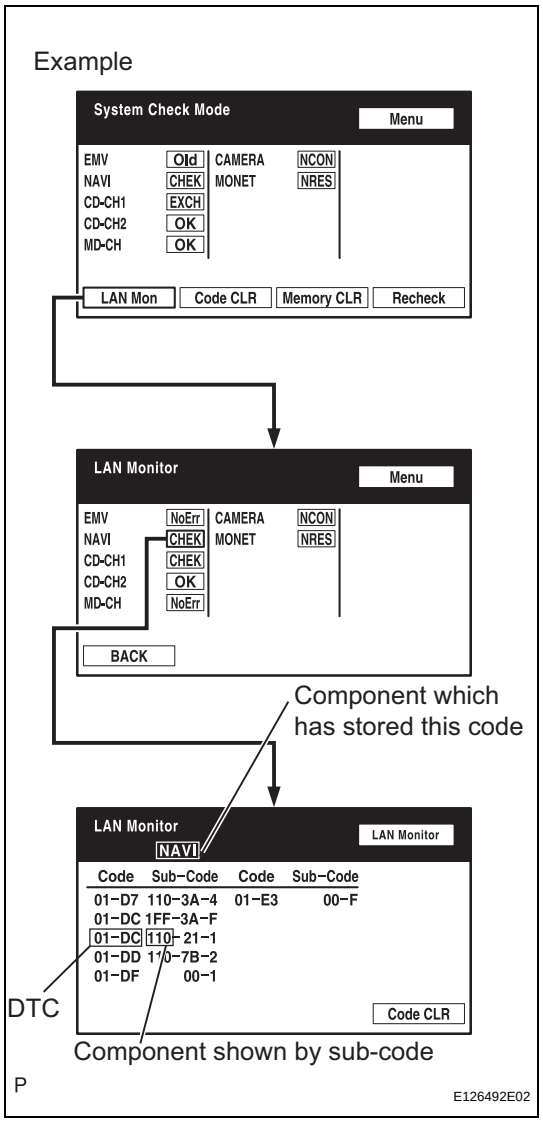

(a) Enter the diagnostic mode.
(b) Press the "LAN Mon" switch to change to "LAN Monitor" mode.
(c) Identify the component shown by the sub-code.
HINT:
- "110 (multi-display)" is the component shown by the sub-code in the example shown in the illustration.
- The sub-code will be indicated by its physical address.
- For the component list, refer to "DIAGNOSIS DISPLAY DETAILED DESCRIPTION" (see page NS-27).

NS

NEXT

2 CHECK POWER SOURCE CIRCUIT OF COMPONENT SHOWN BY SUB-CODE

(a) Inspect the power source circuit of the component shown by the sub-code.
If the power source circuit is operating normally, proceed to the next step.

Component table:

Component	Proceed to
Radio receiver (190)	Radio receiver power source circuit (see page AV-171)
Stereo component amplifier (440)	Stereo component amplifier power source circuit (see page AV-173)

Component	Proceed to
Multi-display (110)	Multi-display power source circuit (see page NS-167)
Navigation ECU (178)	Navigation ECU power source circuit (see page NS-169)

NEXT

3 INSPECT RADIO RECEIVER ASSEMBLY

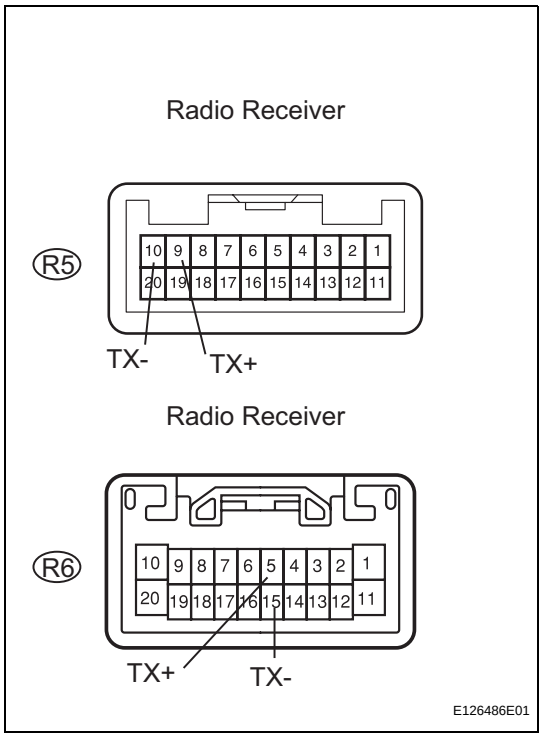

(a) Disconnect the R5 and R6 receiver connectors.
(b) Measure the resistance of the receiver.
Standard resistance

Tester Connection	Specified Condition
R6-5 (TX+) - R6-15 (TX-)	**60 to 80 Ω**
R5-9 (TX+) - R5-10 (TX-)	**60 to 80 Ω**

NG → **REPLACE RADIO RECEIVER ASSEMBLY**

OK

4 CHECK WIRE HARNESS (GATEWAY ECU - COMPONENT SHOWN BY SUB-CODE)

HINT:
- Start the check from the circuit that is near the component shown by the sub-code first.
- For details of the connectors, refer to "TERMINALS OF ECU" (see page NS-40).

(a) Referring to the AVC-LAN wiring diagram below, check the AVC-LAN circuit between the gateway ECU and the component shown by the sub-code.
  (1) Disconnect all connectors between the gateway ECU and the component shown by sub-code.
  (2) Check for an open or short in the AVC-LAN circuit between the gateway ECU and the component shown by the sub-code.
  OK:
  There is no open or short circuit.

NS

AVC-LAN Wiring Diagram

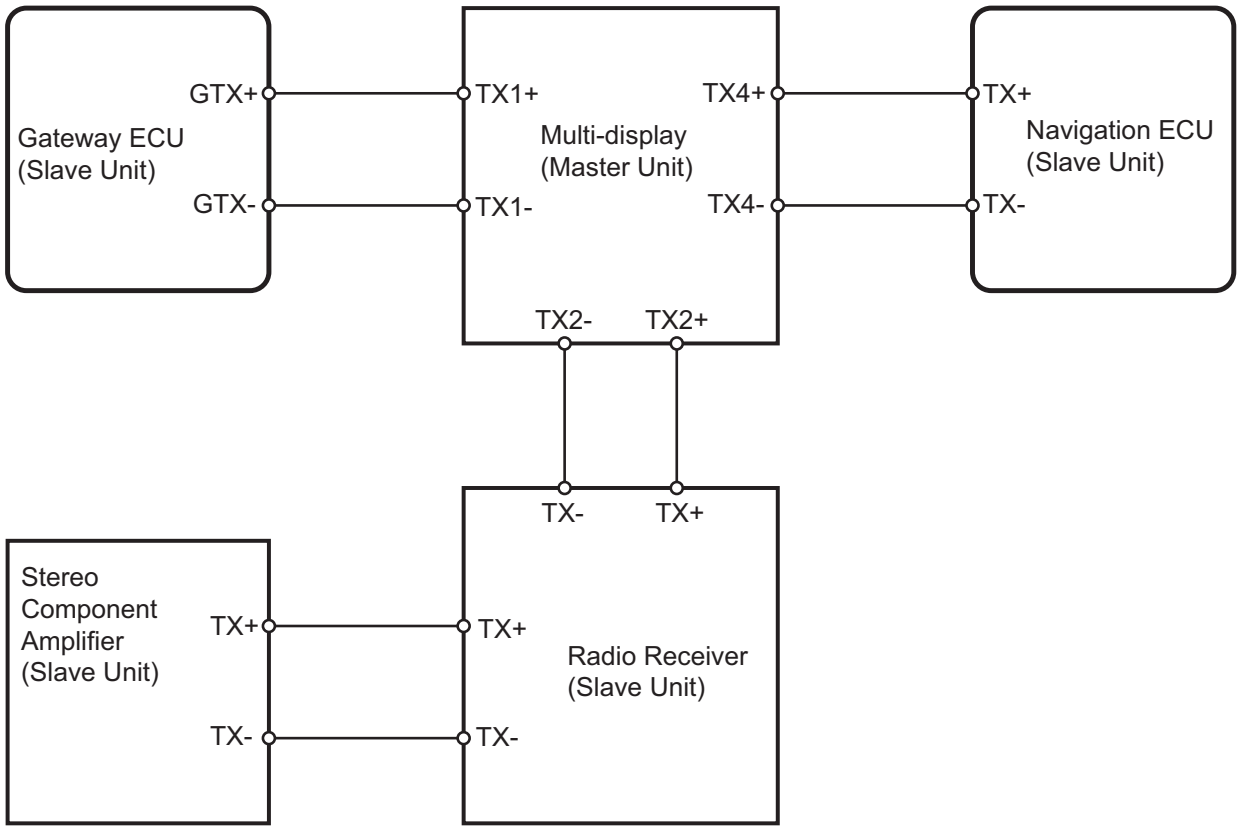

N

E126411E03

NG → **REPAIR OR REPLACE HARNESS AND CONNECTOR**

OK

5	REPLACE COMPONENT SHOWN BY SUB-CODE

(a) Replace the component shown by the sub-code with a normal one and check if the same problem occurs again.
OK:
Same problem does not occur.

NG → **REPLACE GATEWAY ECU**

OK

END

NS

Radio Receiver Communication Error

INSPECTION PROCEDURE

1 IDENTIFY COMPONENT SHOWN BY SUB-CODE

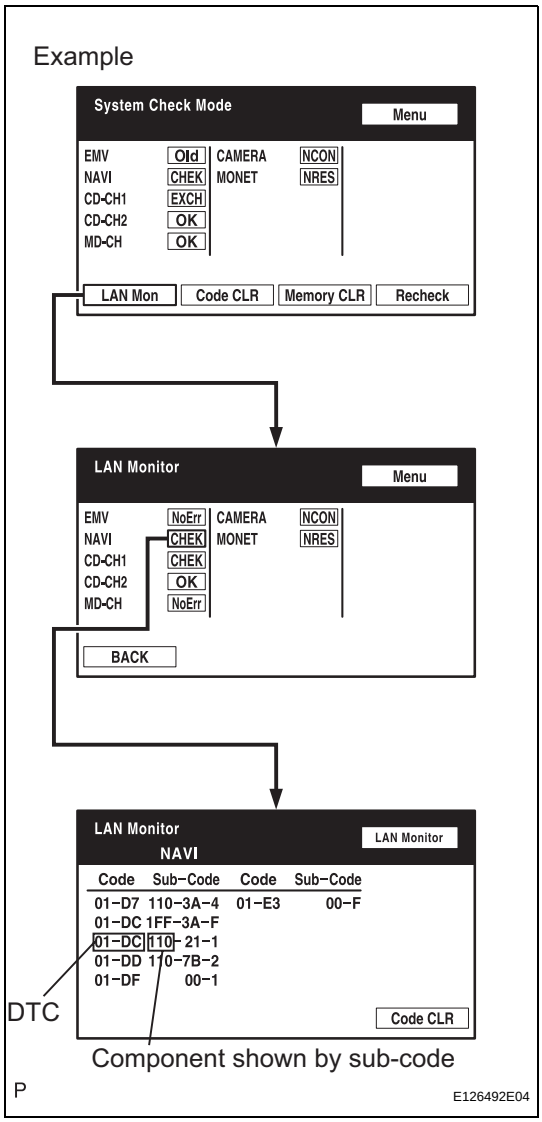

(a) Enter the diagnostic mode.
(b) Press the "LAN Mon" switch to change to "LAN Monitor" mode.
(c) Identify the component shown by the sub-code.
HINT:
- "110 (multi-display)" is the component shown by the sub-code in the example shown in the illustration.
- The sub-code will be indicated by its physical address.
- For the component list, refer to "DIAGNOSIS DISPLAY DETAILED DESCRIPTION" (see page NS-27).

NS

NEXT

2 CHECK POWER

(a) Inspect the power source circuit of the component shown by the sub-code.
If the power source circuit is operating normally, proceed to the next step.

Component table:

Component	Proceed to
Gateway ECU (1C6)	Gateway ECU power source circuit (see page AV-171)
Stereo component amplifier (440)	Stereo component amplifier power source circuit (see page AV-173)

Component	Proceed to
Multi-display (110)	Multi-display power source circuit (see page NS-167)
Navigation ECU (178)	Navigation ECU power source circuit (see page NS-169)

NEXT

3 INSPECT RADIO RECEIVER ASSEMBLY

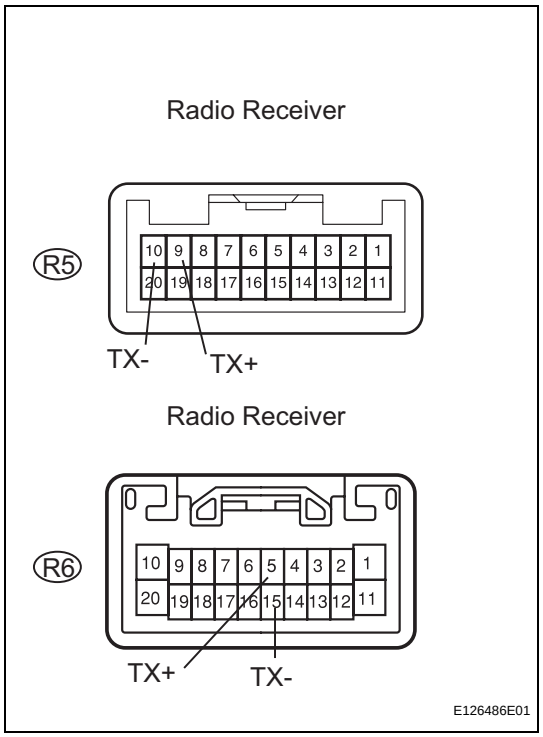

(a) Disconnect the R5 and R6 receiver connectors.
(b) Measure the resistance of the receiver.
Standard resistance

Tester Connection	Specified Condition
R6-5 (TX+) - R6-15 (TX-)	**60 to 80 Ω**
R5-9 (TX+) - R5-10 (TX-)	**60 to 80 Ω**

NG → **REPLACE RADIO RECEIVER ASSEMBLY**

OK

4 CHECK WIRE HARNESS (RADIO RECEIVER - COMPONENT SHOWN BY SUB-CODE)

HINT:
- Start the check from the circuit that is near the component shown by the sub-code first.
- For details of the connectors, refer to "TERMINALS OF ECU" (see page NS-40).

(a) Referring to the AVC-LAN wiring diagram below, check the AVC-LAN circuit between the radio receiver and the component shown by the sub-code.
  (1) Disconnect all connectors between the radio receiver and the component shown by sub-code.
  (2) Check for an open or short in the AVC-LAN circuit between the radio receiver and the component shown by the sub-code.
  OK:
  There is no open or short circuit.

NS

AVC-LAN Wiring Diagram

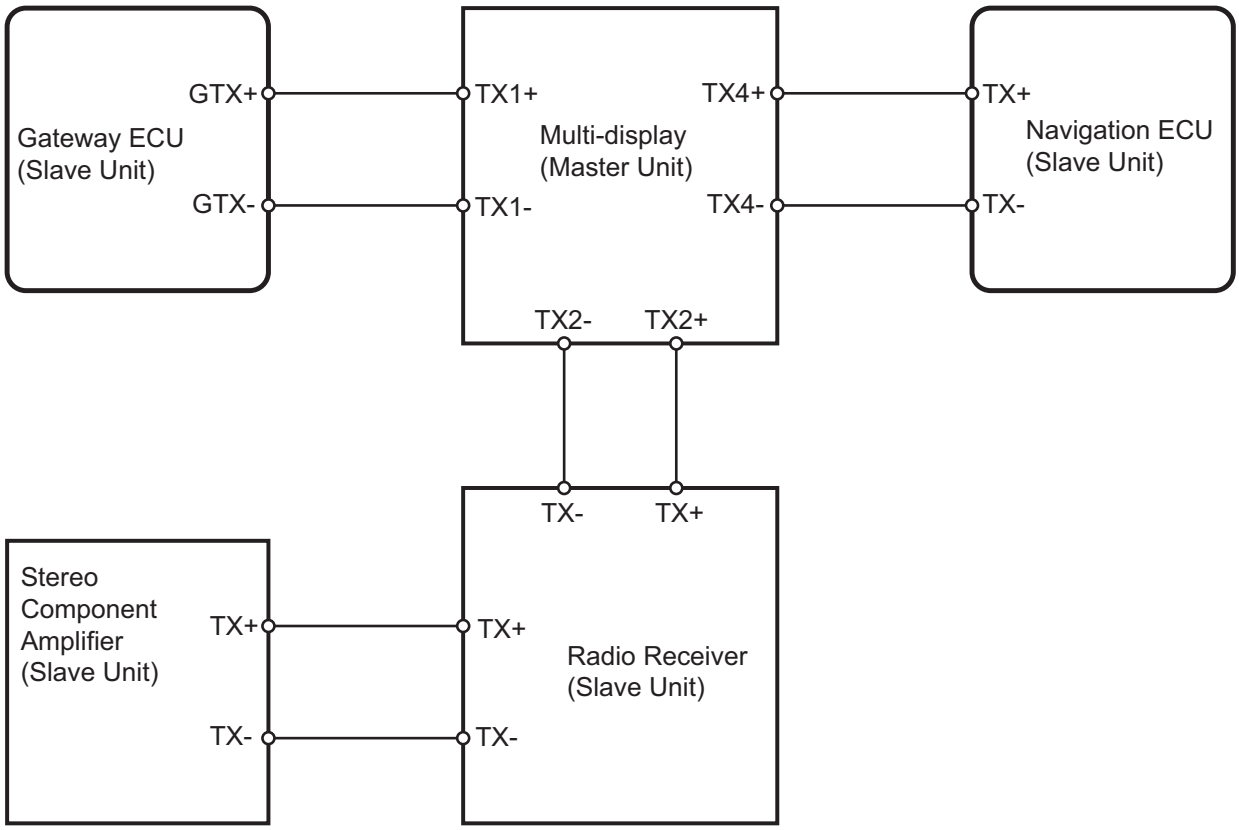

N

E126411E03

NG → **REPAIR OR REPLACE HARNESS AND CONNECTOR**

OK

5	REPLACE COMPONENT SHOWN BY SUB-CODE

(a) Replace the component shown by the sub-code with a normal one and check if the same problem occurs again.
OK:
Same problem does not occur.

NG → **REPLACE RADIO RECEIVER ASSEMBLY**

OK

END

NS

Stereo Component Amplifier Communication Error

INSPECTION PROCEDURE

1 IDENTIFY COMPONENT SHOWN BY SUB-CODE

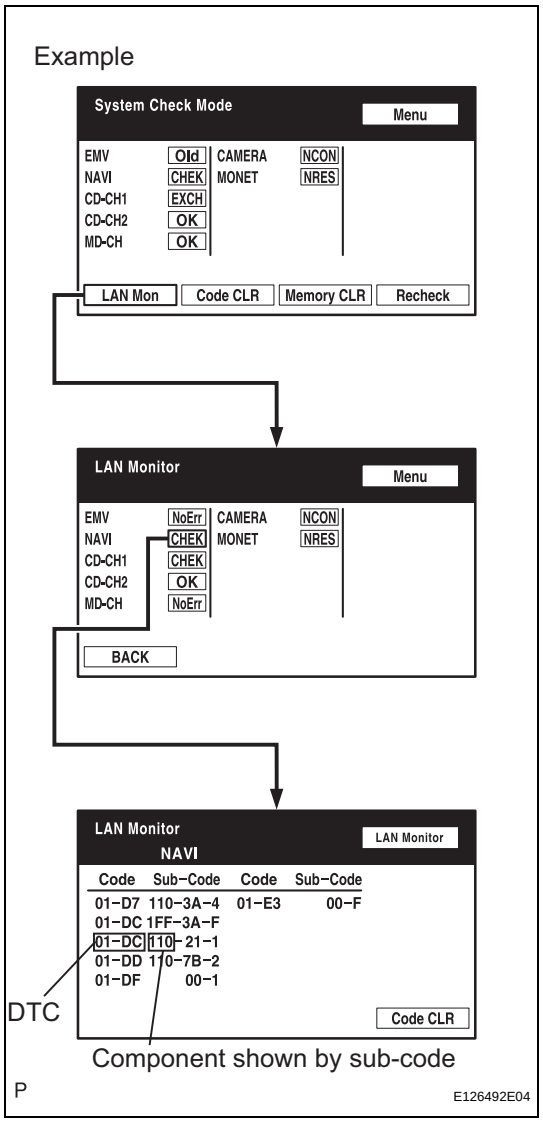

(a) Enter the diagnostic mode.
(b) Press the "LAN Mon" switch to change to "LAN Monitor" mode.
(c) Identify the component shown by the sub-code.
HINT:
- "110 (multi-display)" is the component shown by the sub-code in the example shown in the illustration.
- The sub-code will be indicated by its physical address.
- For the component list, refer to "DIAGNOSIS DISPLAY DETAILED DESCRIPTION" (see page NS-27).

NS

NEXT

2 CHECK POWER SOURCE CIRCUIT OF COMPONENT SHOWN BY SUB-CODE

(a) Inspect the power source circuit of the component shown by the sub-code.
If the power source circuit is operating normally, proceed to the next step.

Component table:

Component	Proceed to
Radio receiver (190)	Radio receiver power source circuit (see page AV-171)
Gateway ECU (1C6)	Gateway ECU power source circuit (see page AV-173)

Component	Proceed to
Multi-display (110)	Multi-display power source circuit (see page NS-167)
Navigation ECU (178)	Navigation ECU power source circuit (see page NS-169)

NEXT

3 INSPECT RADIO RECEIVER ASSEMBLY

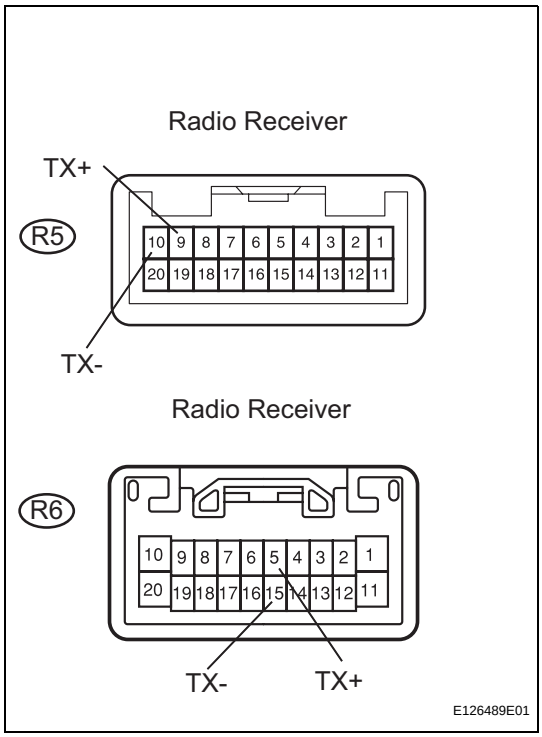

(a) Disconnect the R5 and R6 receiver connectors.
(b) Measure the resistance of the receiver.
Standard resistance

Tester Connection	Specified Condition
R6-5 (TX+) - R6-15 (TX-)	**60 to 80 Ω**
R5-9 (TX+) - R5-10 (TX-)	**60 to 80 Ω**

NG → **REPLACE RADIO RECEIVER ASSEMBLY**

OK

4 CHECK WIRE HARNESS (STEREO COMPONENT AMPLIFIER - COMPONENT SHOWN BY SUB-CODE)

HINT:
- Start the check from the circuit that is near the component shown by the sub-code first.
- For details of the connectors, refer to "TERMINALS OF ECU" (see page NS-40).

(a) Referring to the AVC-LAN wiring diagram below, check the AVC-LAN circuit between the stereo component amplifier and the component shown by the sub-code.
  (1) Disconnect all connectors between the stereo component amplifier and the component shown by sub-code.
  (2) Check for an open or short in the AVC-LAN circuit between the stereo component amplifier and the component shown by the sub-code.
  OK:
  There is no open or short circuit.

NS

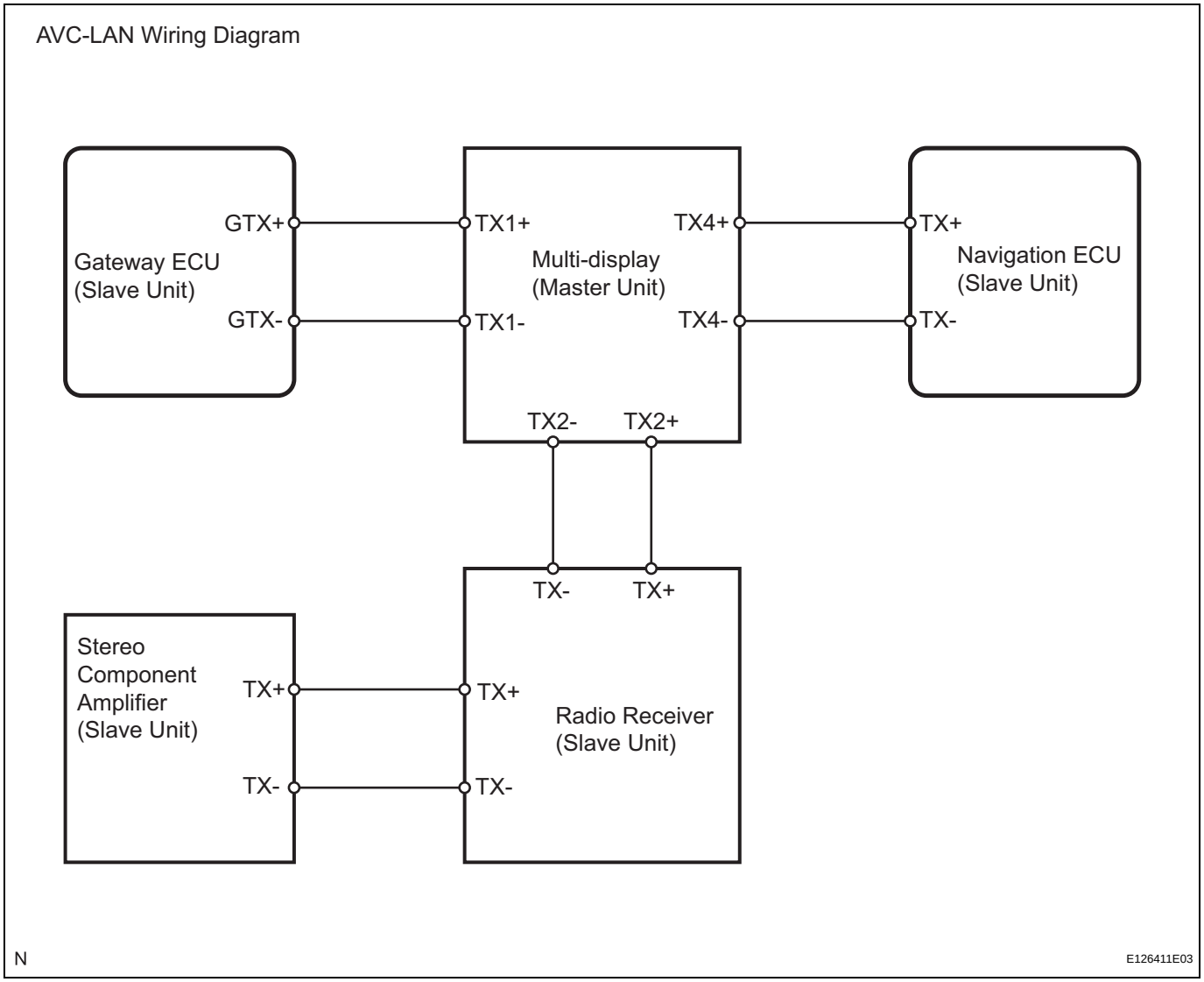

NG → **REPAIR OR REPLACE HARNESS AND CONNECTOR**

OK

5	REPLACE COMPONENT SHOWN BY SUB-CODE

(a) Replace the component shown by the sub-code with a normal one and check if the same problem occurs again.
OK:
Same problem does not occur.

NG → **REPLACE STEREO COMPONENT AMPLIFIER**

OK

END

NS

Multi-display Communication Error

INSPECTION PROCEDURE

1 IDENTIFY COMPONENT SHOWN BY SUB-CODE

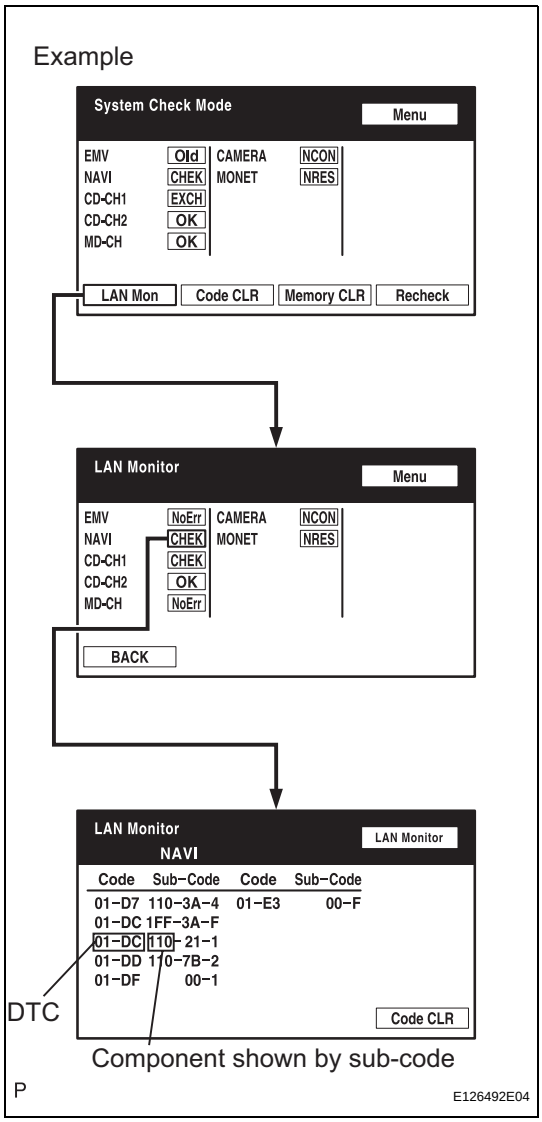

(a) Enter the diagnostic mode.
(b) Press the "LAN Mon" switch to change to "LAN Monitor" mode.
(c) Identify the component shown by the sub-code.
HINT:
- "110 (multi-display)" is the component shown by the sub-code in the example shown in the illustration.
- The sub-code will be indicated by its physical address.
- For the component list, refer to "DIAGNOSIS DISPLAY DETAILED DESCRIPTION" (see page NS-27).

NS

NEXT

2 CHECK POWER SOURCE CIRCUIT OF COMPONENT SHOWN BY SUB-CODE

(a) Inspect the power source circuit of the component shown by the sub-code.
If the power source circuit is operating normally, proceed to the next step.

Component table:

Component	Proceed to
Radio receiver (190)	Radio receiver power source circuit (see page AV-171)
Stereo component amplifier (440)	Stereo component amplifier power source circuit (see page AV-173)

Component	Proceed to
Gateway ECU (1C6)	Gateway ECU power source circuit (see page AV-177)
Navigation ECU (178)	Navigation ECU power source circuit (see page NS-169)

NEXT

3 CHECK RADIO RECEIVER ASSEMBLY

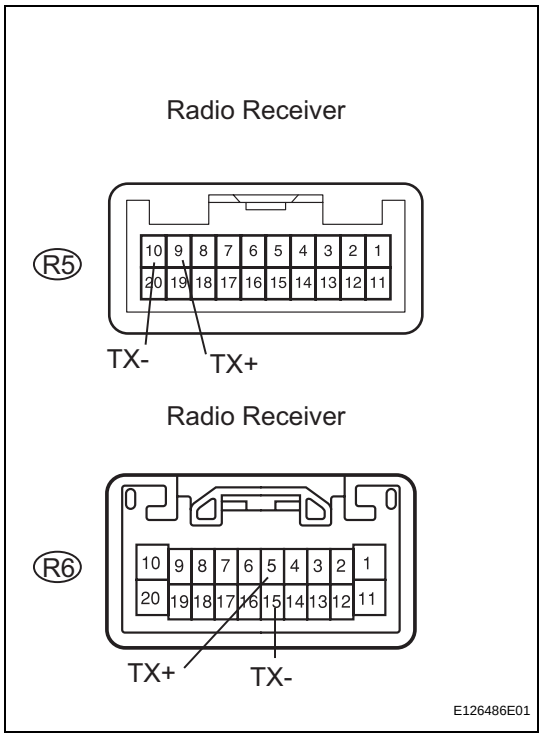

(a) Disconnect the R5 and R6 receiver connectors.
(b) Measure the resistance of the receiver.
Standard resistance

Tester Connection	Specified Condition
R6-5 (TX+) - R6-15 (TX-)	**60 to 80 Ω**
R5-9 (TX+) - R5-10 (TX-)	**60 to 80 Ω**

NG → **REPLACE RADIO RECEIVER ASSEMBLY**

OK

4 CHECK WIRE HARNESS (MULTI-DISPLAY - COMPONENT SHOWN BY SUB-CODE)

HINT:
- Start the check from the circuit that is near the component shown by the sub-code first.
- For details of the connectors, refer to "TERMINALS OF ECU" (see page NS-40).

(a) Referring to the AVC-LAN wiring diagram below, check the AVC-LAN circuit between the multi-display and the component shown by the sub-code.
  (1) Disconnect all connectors between the multi-display and the component shown by sub-code.
  (2) Check for an open or short in the AVC-LAN circuit between the multi-display and the component shown by the sub-code.
  OK:
  There is no open or short circuit.

NS

AVC-LAN Wiring Diagram

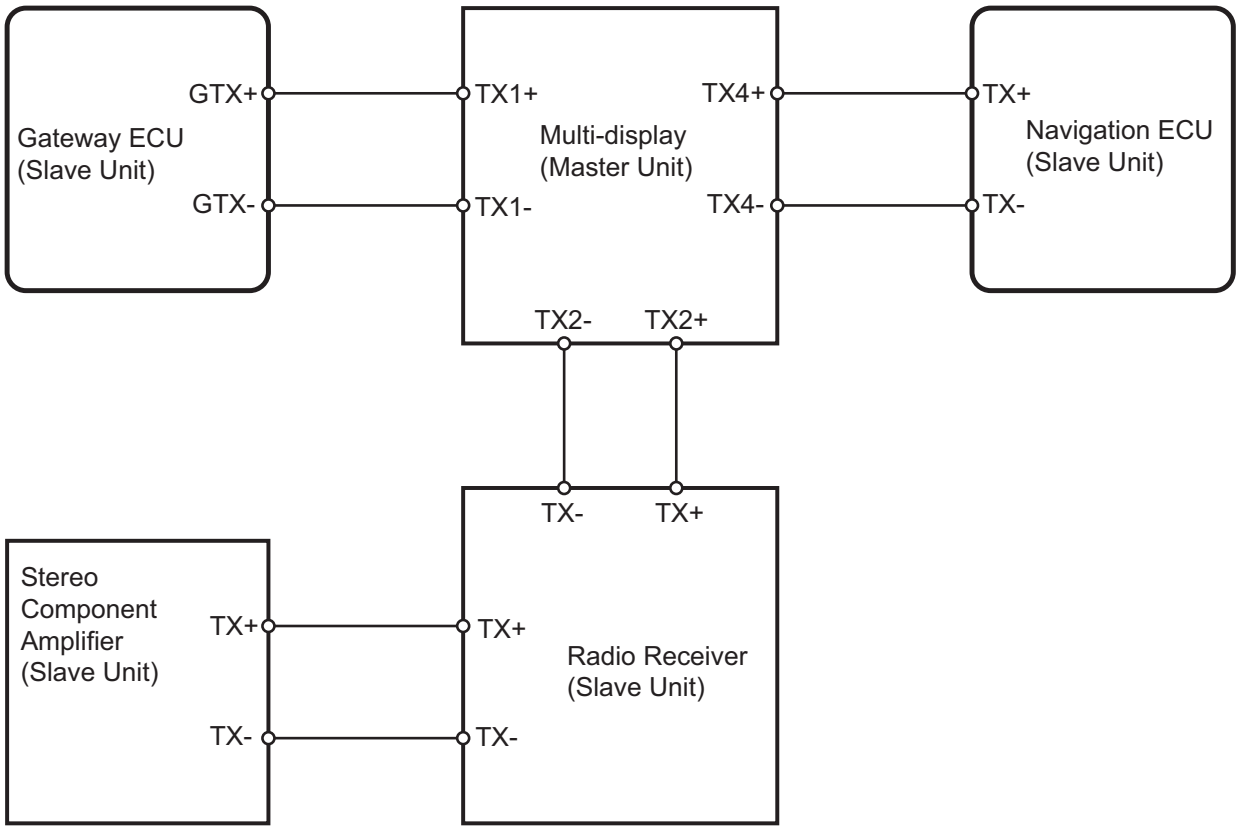

N

E126411E03

NG → **REPAIR OR REPLACE HARNESS AND CONNECTOR**

OK

5	REPLACE COMPONENT SHOWN BY SUB-CODE

(a) Replace the component shown by the sub-code with a normal one and check if the same problem occurs again.
OK:
Same problem does not occur.

NG → **REPLACE MULTI-DISPLAY**

OK

END

NS

Navigation ECU Communication Error

INSPECTION PROCEDURE

1 IDENTIFY COMPONENT SHOWN BY SUB-CODE

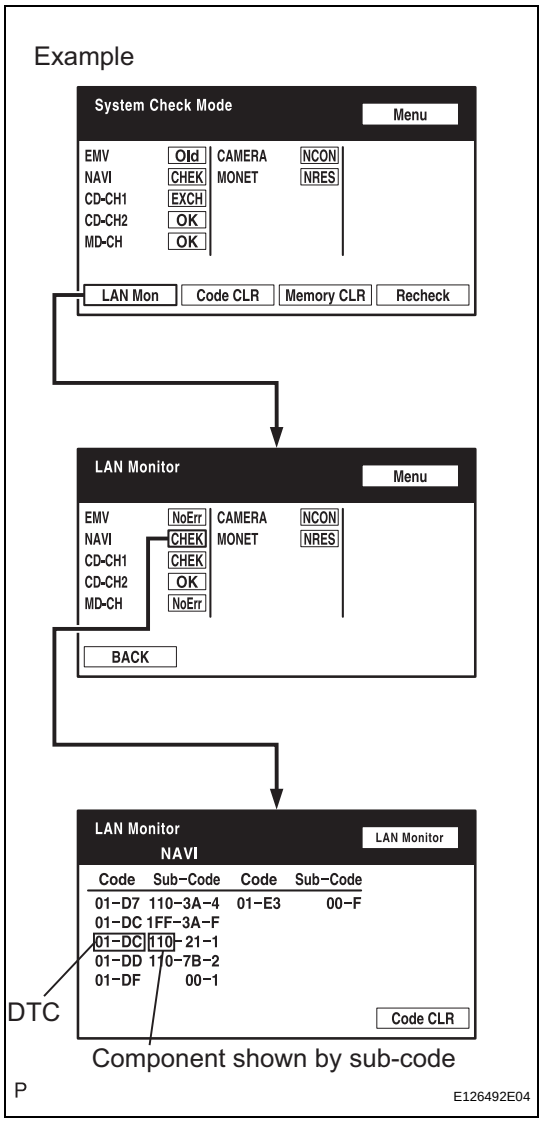

(a) Enter the diagnostic mode.
(b) Press the "LAN Mon" switch to change to "LAN Monitor" mode.
(c) Identify the component shown by the sub-code.
HINT:
- "110 (multi-display)" is the component shown by the sub-code in the example shown in the illustration.
- The sub-code will be indicated by its physical address.
- For the component list, refer to "DIAGNOSIS DISPLAY DETAILED DESCRIPTION" (see page NS-27).

NS

NEXT

2 CHECK POWER SOURCE CIRCUIT OF COMPONENT SHOWN BY SUB-CODE

(a) Inspect the power source circuit of the component shown by the sub-code.
If the power source circuit is operating normally, proceed to the next step.

Component table:

Component	Proceed to
Radio receiver (190)	Radio receiver power source circuit (see page AV-171)
Stereo component amplifier (440)	Stereo component amplifier power source circuit (see page AV-173)

Component	Proceed to
Multi-display (110)	Multi-display power source circuit (see page NS-167)
Gateway ECU (1C6)	Gateway ECU power source circuit (see page AV-177)

NEXT

3 INSPECT RADIO RECEIVER ASSEMBLY

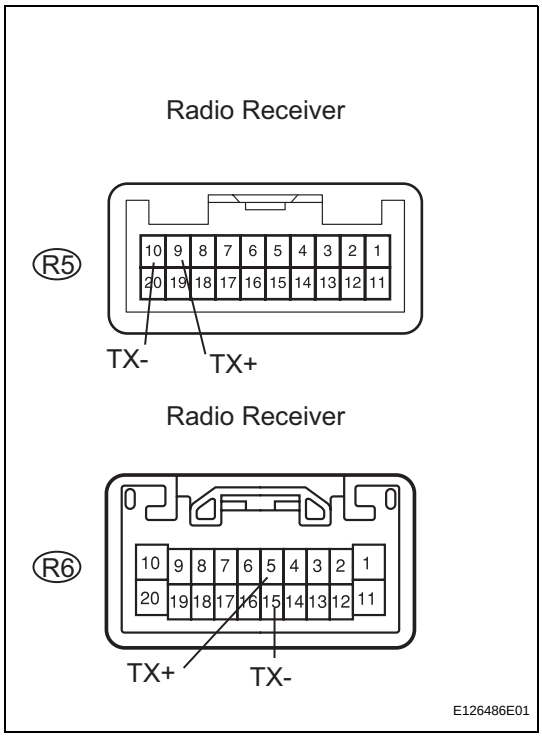

(a) Disconnect the R5 and R6 receiver connectors.
(b) Measure the resistance of the receiver.
Standard resistance

Tester Connection	Specified Condition
R6-5 (TX+) - R6-15 (TX-)	**60 to 80 Ω**
R5-9 (TX+) - R5-10 (TX-)	**60 to 80 Ω**

NG → **REPLACE RADIO RECEIVER ASSEMBLY**

OK

4 CHECK WIRE HARNESS (NAVIGATION ECU - COMPONENT SHOWN BY SUB-CODE)

HINT:
- Start the check from the circuit that is near the component shown by the sub-code first.
- For details of the connectors, refer to "TERMINALS OF ECU" (see page NS-40).

(a) Referring to the AVC-LAN wiring diagram below, check the AVC-LAN circuit between the navigation ECU and the component shown by the sub-code.
  (1) Disconnect all connectors between the navigation ECU and the component shown by sub-code.
  (2) Check for an open or short in the AVC-LAN circuit between the navigation ECU and the component shown by the sub-code.
  OK:
  There is no open or short circuit.

NS

AVC-LAN Wiring Diagram

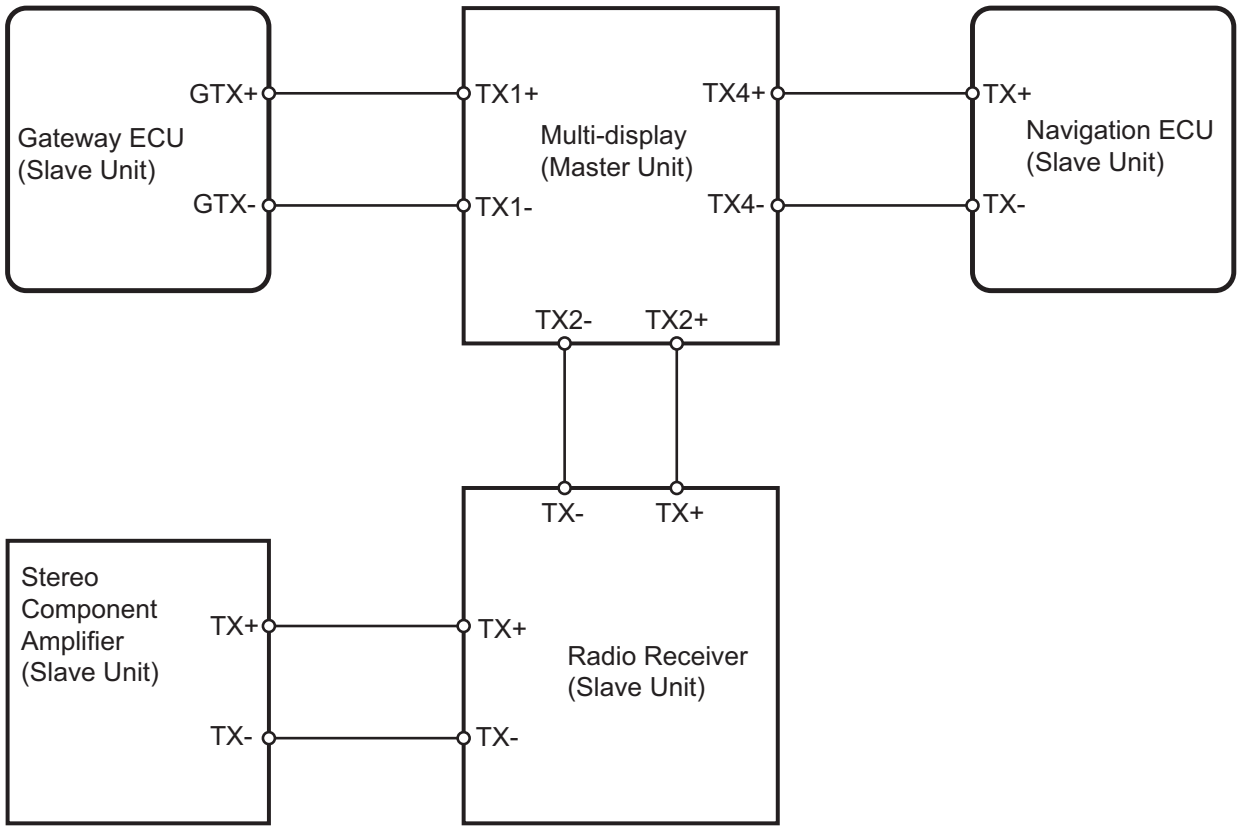

N

E126411E03

NG → **REPAIR OR REPLACE HARNESS AND CONNECTOR**

OK

5	REPLACE COMPONENT SHOWN BY SUB-CODE

(a) Replace the component shown by the sub-code with a normal one and check if the same problem occurs again.
OK:
Same problem does not occur.

NG → **REPLACE NAVIGATION ECU**

OK

END

NS

Multi-display Power Source Circuit

DESCRIPTION

The circuit provides power to the multi-display.

WIRING DIAGRAM

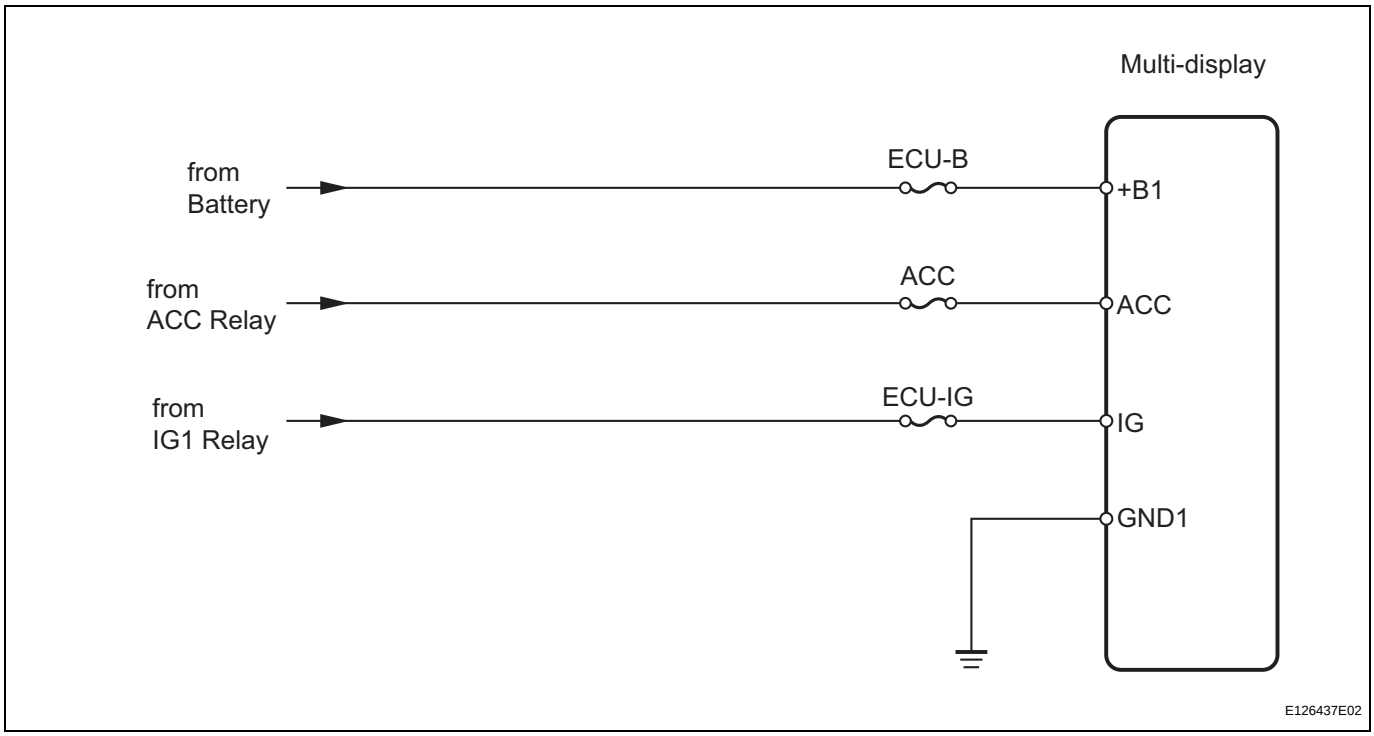

INSPECTION PROCEDURE

1	INSPECT FUSE (ACC, ECU-B, ECU-IG)

(a) Disconnect the ACC, ECU-B and ECU-IG fuses from the driver side junction block.
(b) Measure the resistance of the fuses.
Standard resistance:
Below 1 Ω

NG → **REPLACE FUSE**

OK

NS

2 CHECK WIRE HARNESS (MULTI-DISPLAY - BATTERY AND BODY GROUND)

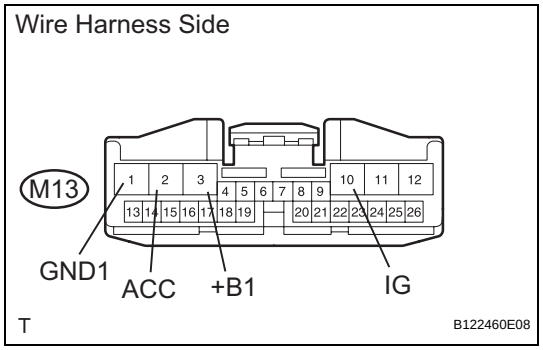

(a) Disconnect the M13 display connector.
(b) Measure the resistance and voltage of the wire harness side connector.

Standard resistance

Tester Connection	Specified Condition
M13-1 (GND1) - Body ground	Below 1 Ω

Standard voltage

Tester Connection	Condition	Specified Condition
M13-3 (+B1) - Body ground	Always	10 to 14 V
M13-2 (ACC) - Body ground	Power switch ON (ACC)	10 to 14 V
M13-10 (IG) - Body ground	Power switch ON (IG)	10 to 14 V

NG → **REPAIR OR REPLACE HARNESS AND CONNECTOR**

OK

PROCEED TO NEXT INSPECTION PROCEDURE SHOWN IN PROBLEM SYMPTOMS TABLE

Navigation ECU Power Source Circuit

DESCRIPTION

This is the power source circuit to operate the navigation ECU.

WIRING DIAGRAM

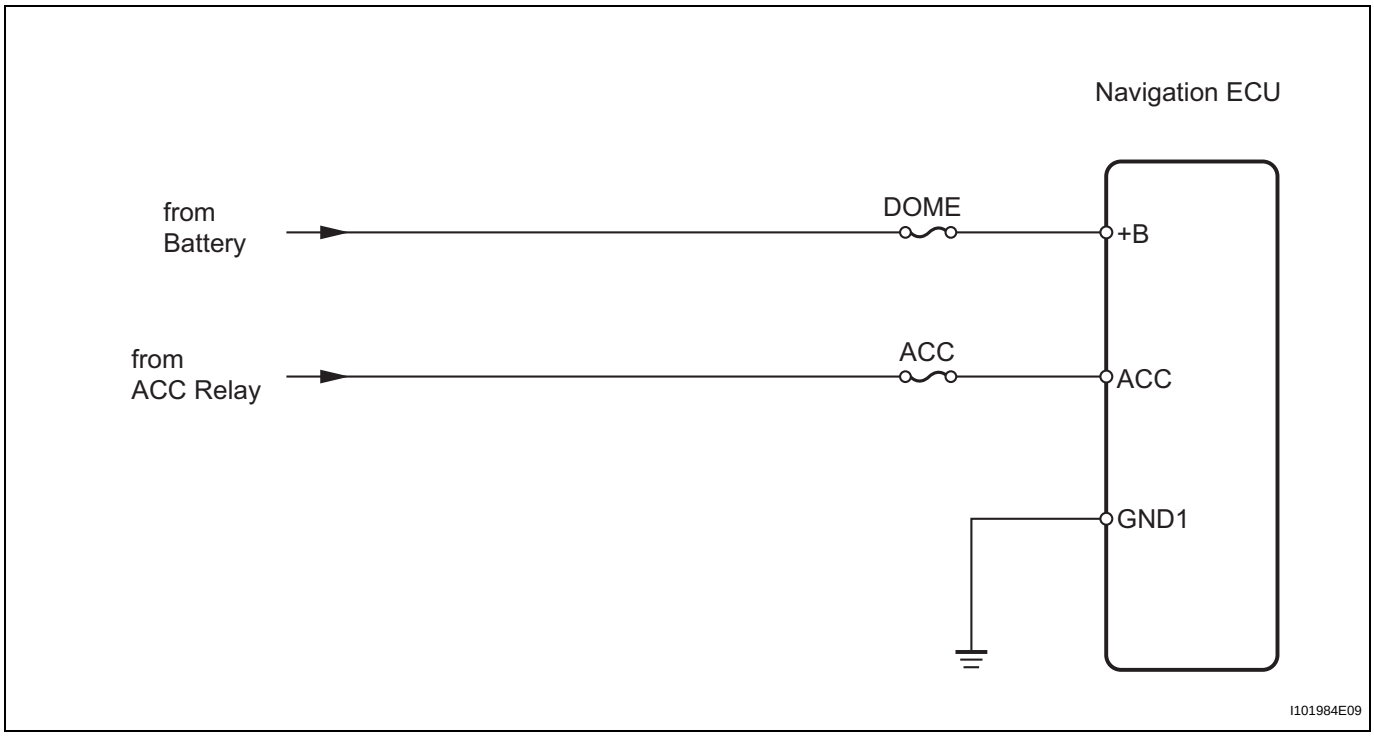

INSPECTION PROCEDURE

1	INSPECT FUSE (DOME, ACC)

(a) Disconnect the DOME fuse from the engine room junction block.
(b) Disconnect the ACC fuse from the driver side junction block.
(c) Measure the resistance of the fuses.
Standard resistance:
Below 1 Ω

NG → **REPLACE FUSE**

OK

NS

2 CHECK WIRE HARNESS (NAVIGATION ECU - BATTERY AND BODY GROUND)

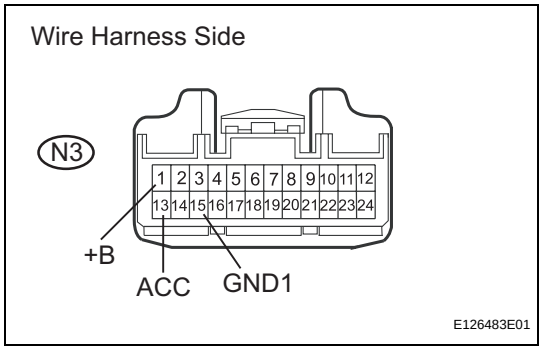

(a) Disconnect the N3 ECU connector.
(b) Measure the voltage and resistance of the wire harness side connector.

Standard voltage

Tester Connection	Condition	Specified Condition
N3-1 (+B) - Body ground	Always	10 to 14 V
N3-13 (ACC) - Body ground	Power switch ON (ACC)	10 to 14 V

Standard resistance

Tester Connection	Specified Condition
N3-15 (GND1) - Body ground	Below 1 Ω

NG → **REPAIR OR REPLACE HARNESS AND CONNECTOR**

OK

PROCEED TO NEXT INSPECTION PROCEDURE SHOWN IN PROBLEM SYMPTOMS TABLE

MULTI-DISPLAY

COMPONENTS

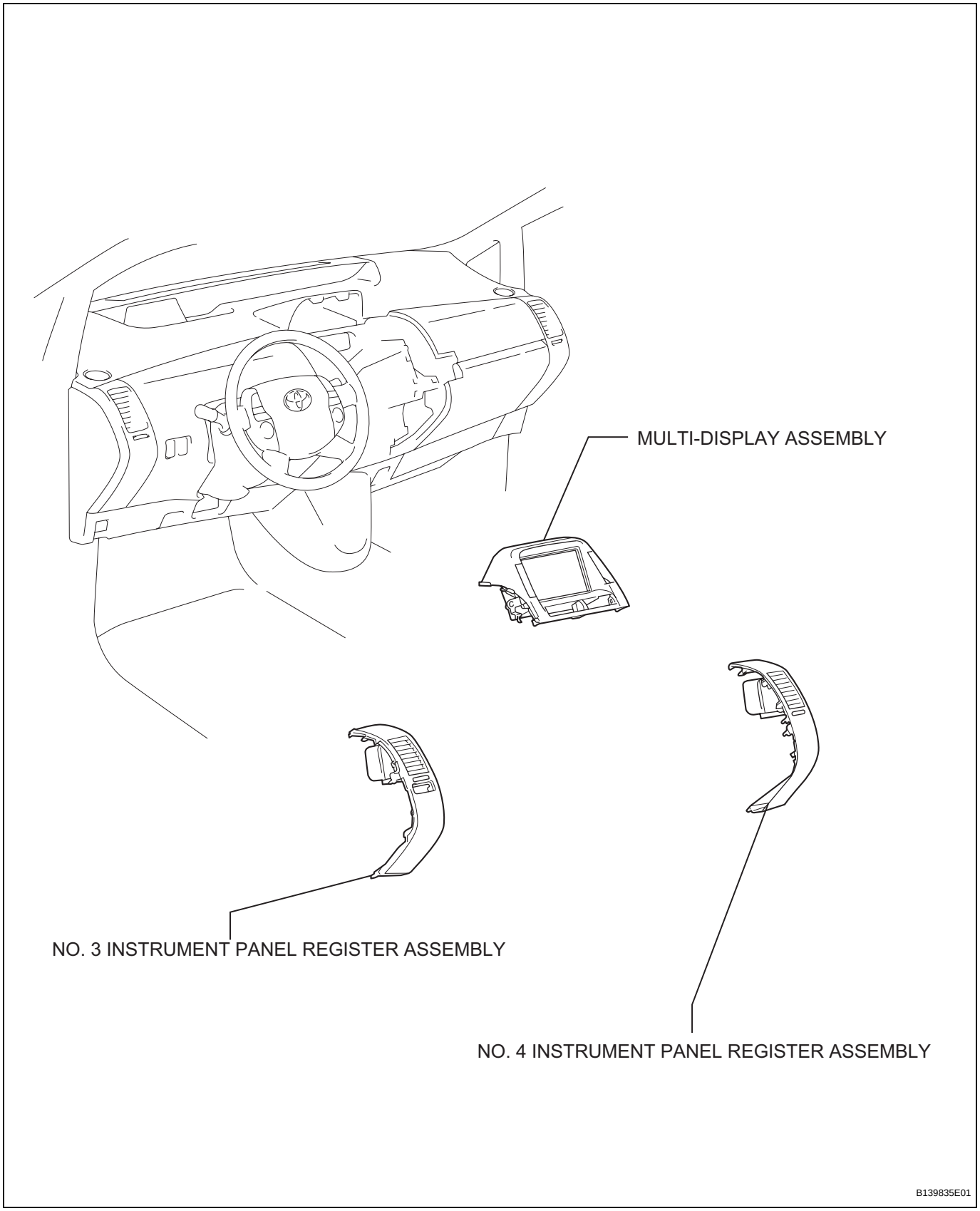

REMOVAL

1. **DISCONNECT CABLE FROM NEGATIVE BATTERY TERMINAL**
   CAUTION:
   Wait at least 90 seconds after disconnecting the cable from the negative (-) battery terminal to prevent airbag and seat belt pretensioner activation.
2. **REMOVE NO. 3 INSTRUMENT PANEL REGISTER ASSEMBLY (See page IP-6)**
3. **REMOVE NO. 4 INSTRUMENT PANEL REGISTER ASSEMBLY (See page IP-6)**
4. **REMOVE MULTI-DISPLAY ASSEMBLY**
   (a) Remove the 2 bolts.
   (b) Disconnect the connector and remove the multi-display.

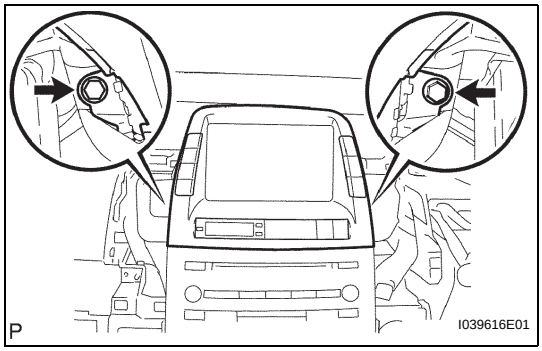

NS

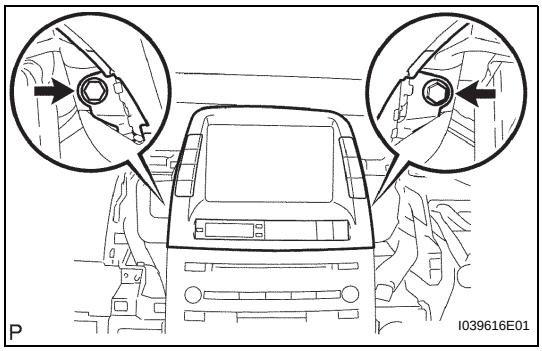

INSTALLATION

1. **INSTALL MULTI-DISPLAY ASSEMBLY**
   (a) Connect the connector and install the multi-display.
   (b) Install the 2 bolts.
2. **INSTALL NO. 4 INSTRUMENT PANEL REGISTER ASSEMBLY (See page IP-12)**
3. **INSTALL NO. 2 INSTRUMENT PANEL REGISTER ASSEMBLY (See page IP-13)**
4. **CONNECT CABLE TO NEGATIVE BATTERY TERMINAL**
5. **PERFORM INITIALIZATION**
   (a) Perform initialization (see page IN-32).
   NOTICE:
   Certain systems need to be initialized after disconnecting and reconnecting the cable from the negative (-) battery terminal.

NAVIGATION ECU

COMPONENTS

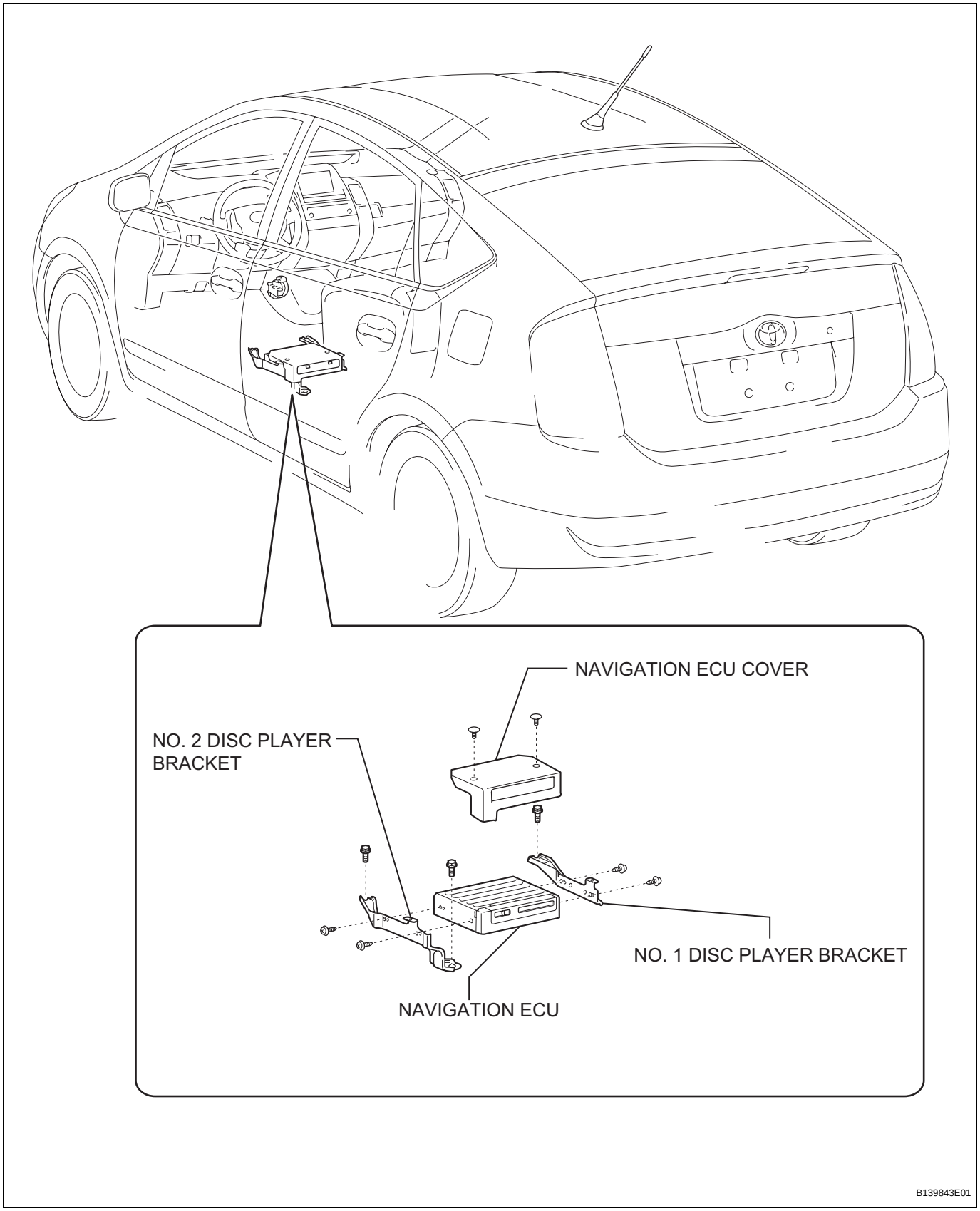

REMOVAL

1. **DISCONNECT CABLE FROM NEGATIVE BATTERY TERMINAL**
   CAUTION:
   Wait at least 90 seconds after disconnecting the cable from the negative (-) battery terminal to prevent airbag and seat belt pretensioner activation.

2. **REMOVE FRONT SEAT ASSEMBLY LH (See page SE-4)**

3. **REMOVE NAVIGATION ECU COVER**
   (a) Detach the 2 clips and remove the navigation ECU cover.

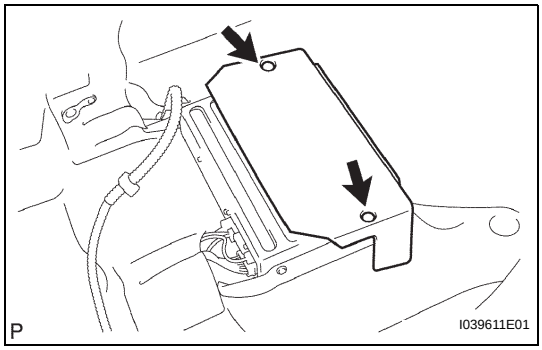

4. **REMOVE NAVIGATION ECU WITH BRACKET**
   (a) Disconnect the connector.

   (b) Remove the 3 bolts and navigation ECU with bracket.

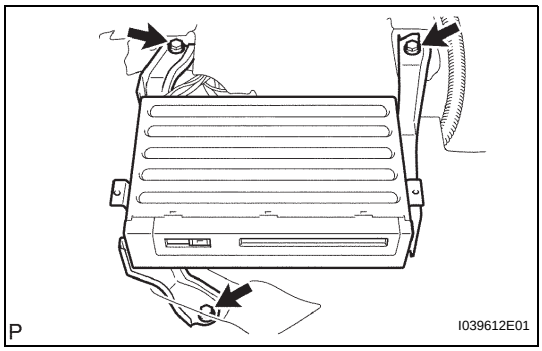

5. **REMOVE NO. 1 DISC PLAYER BRACKET**
   (a) Remove the 2 bolts and disc player bracket.

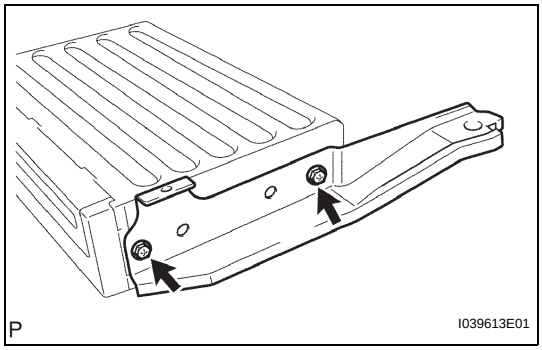

6. **REMOVE NO. 2 DISC PLAYER BRACKET**
   (a) Remove the 2 bolts and No. 2 disc player bracket.

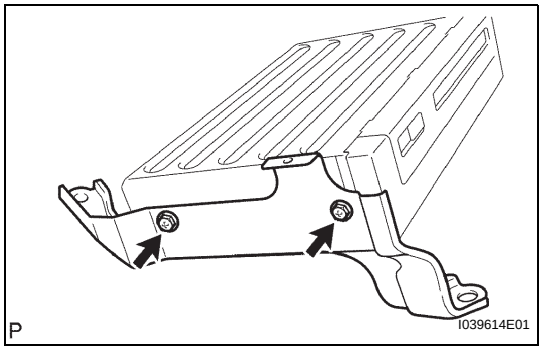

INSTALLATION

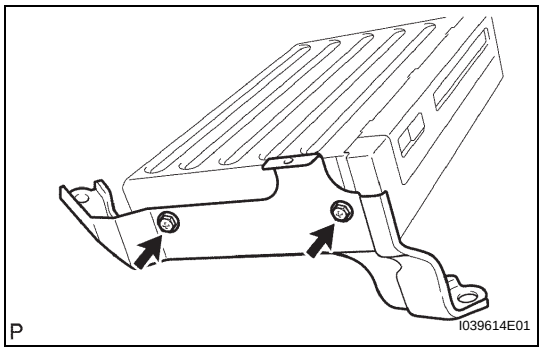

1. INSTALL NO. 2 DISC PLAYER BRACKET
(a) Install the bracket with the 2 bolts.

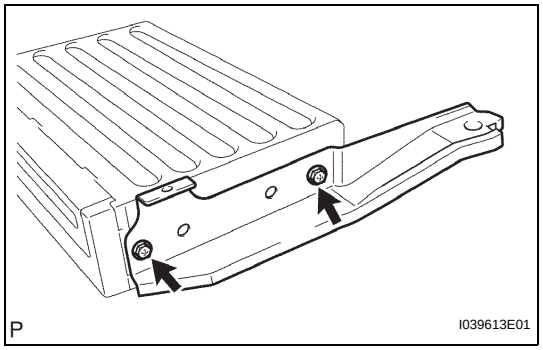

2. INSTALL NO. 1 DISC PLAYER BRACKET
(a) Install the bracket with the 2 bolts.

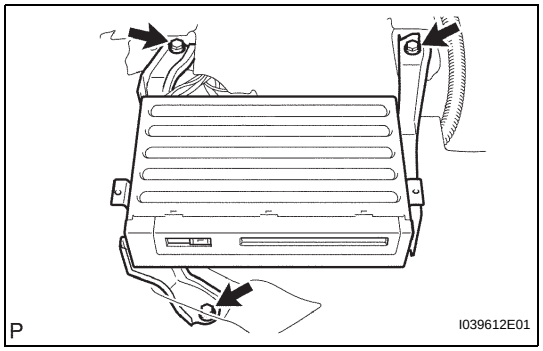

3. INSTALL NAVIGATION ECU WITH BRACKET
(a) Install the navigation ECU with the 3 bolts.
(b) Connect the connector.

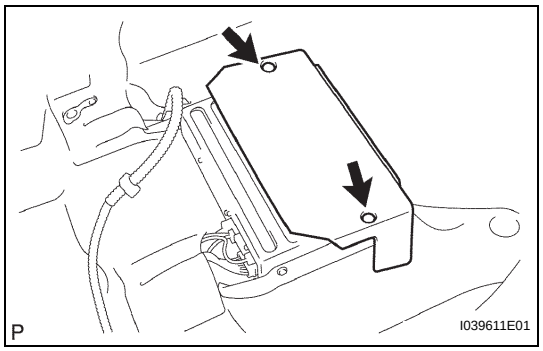

4. INSTALL NAVIGATION ECU COVER
(a) Install the cover and attach the 2 clips.

5. INSTALL FRONT SEAT ASSEMBLY LH (See page SE-10)

6. CONNECT CABLE TO NEGATIVE BATTERY TERMINAL

7. PERFORM INITIALIZATION
(a) Perform initialization (see page IN-32).
NOTICE:
Certain systems need to be initialized after disconnecting and reconnecting the cable from the negative (-) battery terminal.

NAVIGATION ANTENNA

COMPONENTS

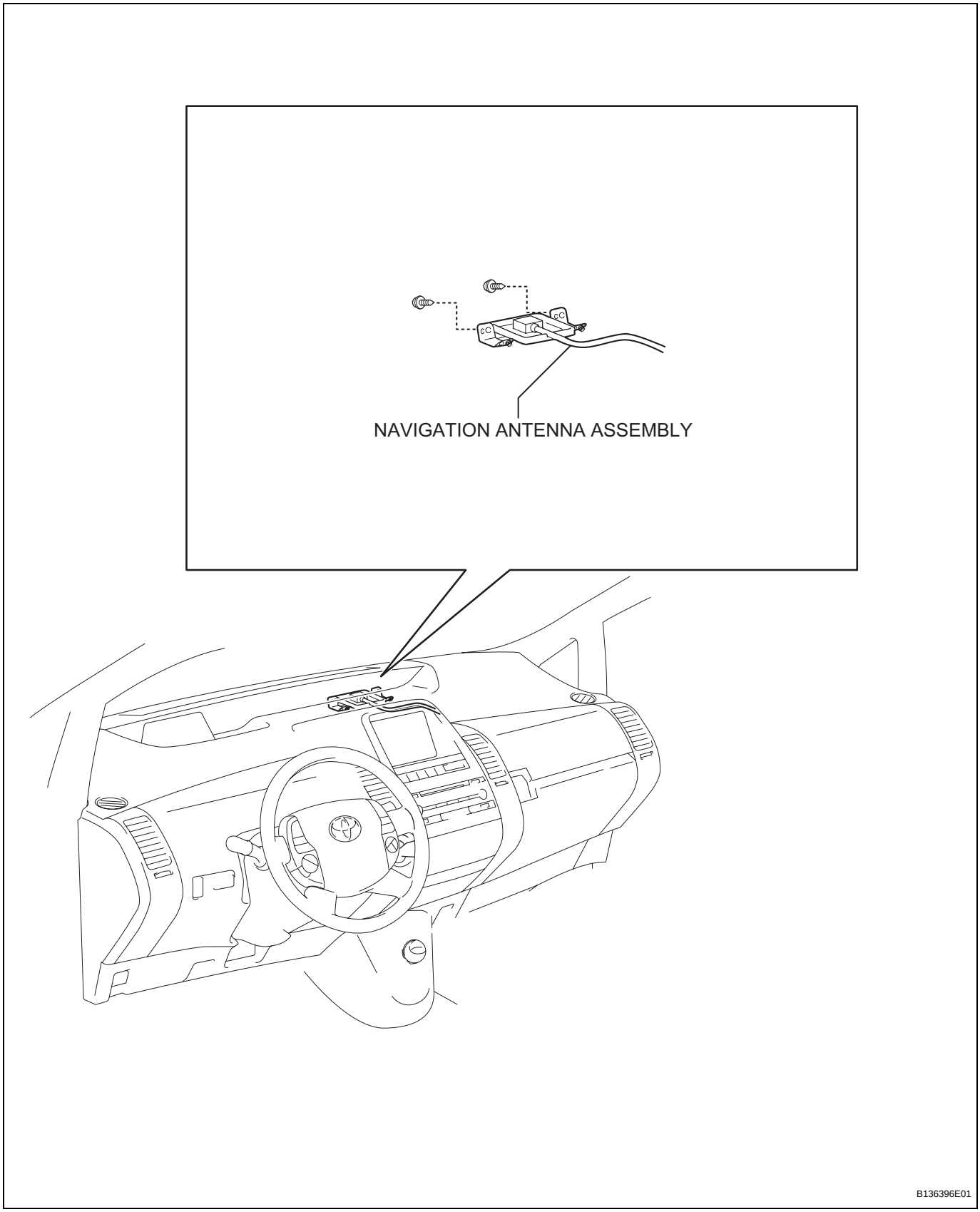

REMOVAL

1. **DISCONNECT CABLE FROM NEGATIVE BATTERY TERMINAL**
   CAUTION:
   Wait at least 90 seconds after disconnecting the cable from the negative (-) battery terminal to prevent airbag and seat belt pretensioner activation.

2. **REMOVE INSTRUMENT PANEL SUB-ASSEMBLY**
   (a) Remove the instrument panel (see page IP-5).

3. **REMOVE NAVIGATION ANTENNA ASSEMBLY**
   (a) Remove the 2 screws and detach the 3 clamps to remove the navigation antenna.

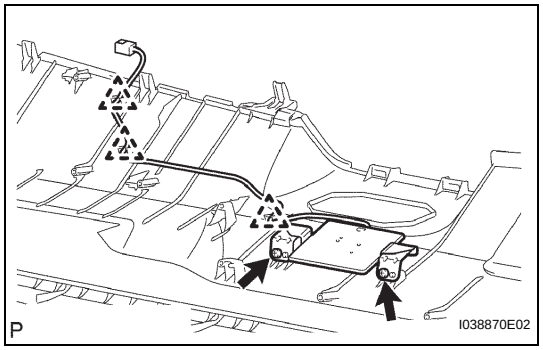

INSTALLATION

1. **INSTALL NAVIGATION ANTENNA ASSEMBLY**
   (a) Install the navigation antenna with the 2 screws and attach the 3 clamps.

2. **INSTALL INSTRUMENT PANEL SUB-ASSEMBLY**
   (a) Install the instrument panel (see page IP-11).

3. **CONNECT CABLE TO NEGATIVE BATTERY TERMINAL**
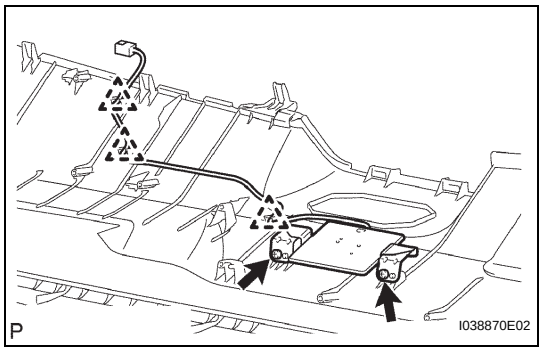
4. **PERFORM INITIALIZATION**
   (a) Perform initialization (see page IN-32).
   NOTICE:
   Certain systems need to be initialized after disconnecting and reconnecting the cable from the negative (-) battery terminal.