A

Accessories and Modifications 205
ACCESSORY (Ignition Key Position) 79
Accessory Power Sockets 100
Additives, Engine Oil 252
Adjusting the Steering Wheel 74
Advanced Airbags 27
Airbag (SRS) 9, 22
Air Conditioning System 104
Air Pressure, Tires 271, 272
Alcohol in Gasoline 198
Antifreeze 254
Anti-lock Brakes (ABS)
  Indicator Light 59, 225
  Operation 225
Anti-theft, Audio System 188
Anti-theft Steering Column Lock 79
Audio System 109
Automatic Seat Belt Tensioners ... 20
Automatic Speed Control 193
Automatic Transmission 219
  Capacity, Fluid 309
  Checking Fluid Level 256
  Shifting 219
  Shift Lever Position Indicators 219
  Shift Lever Positions 219
  Shift Lock Release 221
Automatic Transmission Fluid ... 256
Auxiliary Input Jack 192

B

Battery
  Charging System Indicator 58, 295
  Jump Starting 291
  Maintenance 277
  Specifications 310
Before Driving 197
Belts, Seat 8, 18
Beverage Holders 99
Booster Seats 50
Brakes
  Anti-lock Brakes (ABS) 225
  Break-in, New Linings 198
  Bulb Replacement 266
  Fluid 258
  Parking 94
  System Design 224
  System Indicator 58, 297
  Wear Indicators 225
Braking System 224
Break-in, New Vehicle 198
Brightness Control, Instruments 72

CONTINUED

Bulb Replacement
Back-up Lights 266
Brake Lights 266
Daytime Running Lights 262
Front Parking/Turn Signal Lights 263
Front Side Marker Lights 265
Headlights 261
High-mount Brake Light 267
Rear Bulbs 266
Rear License Plate Lights 267
Side Turn Signal Lights 264
Specifications 310
Taillights 266
Turn Signal Lights 266
Bulbs, Halogen 261
Bungee Cords 211

C

Capacities Chart 309
Carbon Monoxide Hazard 52
Cargo 207
Cargo Area Light 96
Cargo Hook 212
Cargo, How to Carry 207
Carrying Cargo 207
CAUTION, Explanation of iii
CD Care 183
CD Error Messages 125, 148
CD Player 119, 140
Ceiling Light 96
Certification Label 306
Chains, Tires 276
Changing a Flat Tire 283
Changing Oil
How to 252
When to 243
Charging System Indicator 58, 295
Check Fuel Cap Message 66
Checklist, Before Driving 215
Child Safety 35
Booster Seats 50
Child Seats 40, 41, 42
Important Safety Reminders 39
Infants 40
Larger Children 49
LATCH 44
Risks with Airbags 36
Small Children 41
Tethers 48
Warning Labels 37
Where Should a Child Sit? 36
Child Seats 35, 42
LATCH Anchorage Points 44
Tether Anchorage Points 48
Cleaning the Seat Belts 268
Clock 189
Clutch Fluid 258
Code, Audio System 188
CO in the Exhaust 52, 316
Cold Weather, Starting in 216
Compact Spare Tire 282
Controls, Instruments and 55
Coolant
Adding 254
Checking 201
Proper Solution 254
Temperature Gauge 67
Cooler Box 98
Courtesy Light 96
Crankcase Emissions Control System 316
Cruise Control Indicator 60
Cruise Control Operation 193
Cruise Main Indicator 60

Cup Holders 99
Customer Service 322

D

DANGER, Explanation of iii
Dashboard 3, 56
Daytime Running Lights 72
Daytime Running Lights
Indicator 60
Dead Battery 291
Defects, Reporting Safety (U.S. only) 324
Defogger, Rear Window 74
Dimensions 308
Dimming the Headlights 71
Dipstick
Automatic Transmission 256
Engine Oil 201
Directional Signals 60, 71
Disc Brake Wear Indicators 225
Disc Care 183
Disc Changer Error Messages 126
Disc Player Error Messages 125, 148
Disposal of Used Oil 253
Doors
Indicator 11
Locking and Unlocking 80
Power Door Locks 80
DOT Tire Quality Grading (U.S. Vehicles) 311
Downshifting, Manual Transmission 217
Driver and Passenger Safety 5
Driving 213
Economy 202
Driving Guidelines 214
Dust and Pollen Filter 269

E

Economy, Fuel 202
Emergencies on the Road 281
Battery, Jump Starting 291
Brake System Indicator 58, 297
Changing a Flat Tire 283
Charging System Indicator 58, 295
Checking the Fuses 298
Driving with a Flat Tire 282
Hazard Warning Flashers 73
Jump Starting 291
Low Oil Pressure Indicator 58, 295
Malfunction Indicator Lamp 58, 296
Overheated Engine 293
Towing 303
Emergency Brake 94
Emergency Flashers 73
Emergency Towing 303
Emissions Controls 316
Emissions Testing 319

CONTINUED

Engine
Adding Engine Coolant 254
Coolant Temperature Gauge 67
If it Won't Start 289
Malfunction Indicator
Lamp 58, 296
Oil Life Indicator 243
Oil Pressure Indicator 58, 295
Oil, What Kind to Use 251
Overheating 293
Specifications 308
Speed Limiter 218, 221
Starting 216
Engine Coolant 254
Engine Number 307
Ethanol in Gasoline 198
Evaporative Emissions
Controls 316
Exhaust Fumes 52
Expectant Mothers, Use of Seat
Belts by 16

F

Fan, Interior 105
Features 103
Filters
Dust and Pollen 269
Oil 252
Flashers, Hazard Warning 73
Flat Tire, Changing a 283
Floor Mats 268
Fluids
Automatic Transmission 256
Brake 258
Clutch 258
Location 250
Manual Transmission 257
Power Steering 260
Rear Differential 258
Windshield Washer 255
FM/AM Radio Reception 186
Folding the Rear Seats 88
Four-way Flashers 73
Front Airbags 9, 25
Front Seat
Adjusting 83
Fuel 198
Check Fuel Cap Message 66
Economy 202
Fill Door and Cap 199
Gauge 66
Low Fuel Indicator 61
Octane Requirement 198
Reserve Indicator 61
Tank, Filling the 199
Fuel Economy 202
Fuses, Checking the 298

G

Gas Mileage, Improving 203
Gasoline 198
Gauge 66
Low Fuel Indicator 61
Octane Requirement 198
Tank, Refueling 199
Gas Station Procedures 199
Gauges
Engine Coolant Temperature ... 67
Fuel 66
Odometer 65
Outside Temperature
Indicator 68
Speedometer 64
Tachometer 64

Trip meter 66
Gearshift Lever Positions
Automatic
Transmission 219
Manual Transmission 217
Glove Box 100
Gross Axle Weight Rating
(GAWR) 232
Gross Vehicle Weight Rating
(GVWR) 209, 232

H

Halogen Headlight Bulbs 261
Hatch 81
Hazard Warning Flashers 73
Headlights
Aiming 261
Daytime Running Lights 72
High Beam Indicator 61
High Beams, Turning on 71
Lights On Indicator 61
Low Beams, Turning on 71
Reminder Chime 71
Replacing Halogen Bulbs 261
Turning on 71
Head Restraints 85
Heating and Cooling 104
High Altitude, Starting at 216
Hood, Opening and Closing
the 200
Horn 4, 69
Hydraulic Clutch 258

I

Identification Number,
Vehicle 306
Ignition
Keys 75
Switch 79
Immobilizer System 76
Important Safety Precautions 6
Indicators, Instrument Panel 57
ABS (Anti-lock Brake) 59, 226
Brake (Parking and Brake
System) 58, 297
Charging System 58, 295
Cruise Control 60
Cruise Main 60
Door and Tailgate Open 61
DRL (Daytime Running
Lights) 60
High Beam 61
Key (Immobilizer System) 60
Lights On 61
Low Fuel 61
Low Oil Pressure 58, 295
Low Tire Pressure 62, 227
Maintenance Minder 59, 243
Malfunction Indicator
Lamp 58, 296
Passenger Airbag Off 32
Seat Belt Reminder 18, 58
Side Airbag Off 32, 59
SRS 31, 59
TPMS 63, 228
Turn Signal and Hazard
Warning 60
VSA OFF 62
VSA System 62
Washer Level 61
Individual Map Lights 95
Infant Restraint 40

CONTINUED

Infant Seats 40
Tether Anchorage Point 48
Inflation, Proper Tire 271
Recommended Pressures 272
Inside Mirror 93
Inspection, Tire 273
Installing a Child Seat 43
Instrument Panel 57
Instrument Panel Brightness 72
Instruments and Controls 55
Interior Lights 95
Introduction i
iPod® 162
iPod® Error Messages 172

J

Jacking up the Vehicle 283
Jack, Tire 283
Jump Starting 291

K

Keys 75

L

Label, Certification 306
Lane Change, Signaling 71
Lap/Shoulder Belt 14, 19
LATCH Anchorage System 44
Light Control Switch 95
Lights
Bulb Replacement 261
Indicator 57
Interior 95
Parking 71
Turn Signal 71
Load Limit 208
LOCK (Ignition Key Position) 79
Locks
Anti-theft Steering Column 79
Fuel Fill Door 199
Glove Box 100
Hatch 81
Lockout Prevention 81
Power Door 80
Tailgate 82
Low Coolant Level 201
Lower Anchors 44
Low Fuel Indicator 61
Low Oil Pressure
Indicator 58, 295
Lubricant Specifications Chart ... 309
Luggage, Storing (cargo) 207

M

Maintenance 241
Main Items and Sub Items 246
Minder 243
Minder Indicator 59
Owner's Maintenance
Checks 248
Safety 242
Schedule 249
Malfunction Indicator
Lamp 58, 296
Manual Transmission 217
Checking Fluid Level 257
Shifting 217
Manual Transmission Fluid 257
Meters, Gauges 64
Methanol in Gasoline 198
Mirrors, Adjusting 93

Modifications 206
Modifying Your Vehicle 206

N

Neutral Gear Position 220
New Vehicle Break-in 198
Normal Shift Speeds 218
NOTICE, Explanation of i
Numbers, Identification 306

O

Octane Requirement,
Gasoline 198
Odometer 65
Off-Highway Driving
Guidelines 238
Off-Road Precautions 238
Oil
Change, How to 252
Change, When to 243
Checking Engine 201
Life, Engine 243
Pressure Indicator 58, 295
Selecting Proper Viscosity
Chart 251
Onboard Refueling Vapor
Recovery 316
ON (Ignition Key Position) 79
Outside Mirrors 93
Outside Temperature Indicator 68
Overhead Console 101
Overheating, Engine 293
Owner's Maintenance Checks 248
Oxygenated Fuels 198

P

Panel Brightness Control 72
Park Gear Position 219
Parking 223
Parking Brake 94
Parking Brake and Brake System
Indicator 58, 297
Parking Over Things that
Burn 223, 318
Passenger Airbag Off Indicator 32
PGM-FI System 317
Playing a Disc 119, 140
Playing an iPod® 162
Playing a PC card 149
Playing a USB Flash Memory
Device 173
Playing the FM/AM
Radio 110, 127
Playing the XM® Radio 113, 132
Pollen Filter 269
Power Door Locks 80
Power Socket Locations 100
Power Steering Fluid 260
Power Windows 92
Pregnancy, Using Seat Belts 16
Preparing to Drive 215
Proper Seat Belt Usage 14
Protecting Adults and Teens 11
Additional Safety Precautions ... 16
Advice for Pregnant Women 16

CONTINUED

Protecting Children 35
General Guidelines 35
Protecting Infants 40
Protecting Larger Children 49
Protecting Small Children 41
Using Child Seats with Tethers 48
Using LATCH 44

R

Radiator Overheating 293
Radio/CD Sound System 109
Radio Theft Protection 188
Readiness Codes 319
Rear Differential Fluid 258
Rear Lights, Bulb Replacement 266
Rear Seat, Folding 88
Rearview Camera and Monitor 196
Rearview Mirror 93
Rear Window Defogger 74
Rear Window Wiper and Washer 70
Reclining the Front Seats 87
Recommended Shift Speeds 218
Refueling 199
Reminder Indicators 58
Remote Audio Controls 191
Remote Transmitter 77
Replacement Information
Dust and Pollen Filter 269
Engine Oil and Filter 252
Fuses 298
Light Bulbs 261
Schedule 249
Spark Plugs 308
Tires 274
Wiper Blades 269
Replacing Seat Belts After a Crash 20
Reporting Safety Defects (U.S. Vehicles) 324
Reserve Tank, Engine Coolant 201, 254
Restraint, Child 35
Reverse Gear Position 220
Reverse Lockout 217
Rotation, Tire 274

S

Safety Belts 8, 18
Safety Defects, Reporting (U.S. only) 324
Safety Features 7
Airbags 9, 22
Head Restraints 13
Seat Belts 8, 14, 18
Seats & Seat-Backs 11, 12
Safety Labels, Location of 53
Safety Messages iii
Seat Adjustments 83
Seat Belts 8, 18
Additional Information 18
Advice for Pregnant Women 16
Automatic Seat Belt Tensioners 20
Cleaning 268
Lap/Shoulder Belt 14, 19
Maintenance 20
Reminder Indicator and Beeper 18, 58
System Components 18
Use During Pregnancy 16

Wearing a Lap/Shoulder Belt 14, 19
Seats 83
Head Restraints 85
Seats, Adjusting the 83
Sensors
Driver's Seat Position Sensor ... 27
Front Passenger's Weight Sensors 27
Impact Sensors 22, 23
Serial Number 306
Service Intervals 243
Service Manual (U.S. only) 325
Service Station Procedures 199
Setting the Clock 189
Shifting the Automatic Transmission 219
Shift Lever Position Indicators ... 219
Shift Lock Release 221
Side Airbags 28
How the Side Airbag Off Indicator Works 32
How Your Side Airbags Work .. 28
Side Curtain Airbags 30
How Your Side Curtain Airbags Work 30
Side Marker Lights, Bulb Replacement in 265
Signaling Turns 60
Snow Tires 275
Sound System 109
Spare Tire 282
Inflating 271, 282
Specifications 310
Spark Plugs 308
Specifications 308
Speed Control 193
Speed Limiter 218, 221
Speedometer 64
SRS, Additional Information 22
Additional Safety Precautions ... 34
Airbag Service 33
Airbag System Components 22
How the Side Airbag Off Indicator Works 32
How the SRS Indicator Works .. 31
How Your Front Airbags Work 25
How Your Side Airbags Work .. 28
How Your Side Curtain Airbags Work 30
SRS Indicator 31, 59
START (Ignition Key Position) 79
Starting the Engine 216
In Cold Weather at High Altitude 216
With a Dead Battery 291
State Emissions Testing 319
Steam Coming from Engine 293
Steering Wheel
Adjustment 74
Anti-theft Column Lock 79
Buttons 191, 193
Stereo Sound System 109
Storing Your Vehicle 278
Sun Visor 100
Supplemental Restraint System 9, 22
Servicing 33
SRS Indicator 31, 59
System Components 22
Synthetic Oil 252

T

Tachometer 64

CONTINUED

Tailgate 82
Open Indicator 61
Opening the 82
Taillights, Changing Bulbs in 266
Taking Care of the Unexpected 281
Technical Descriptions
DOT Tire Quality Grading (U.S. Vehicles) 311
Emissions Control Systems 316
Three Way Catalytic Converter 318
Tire Labeling 313
Tire Pressure Monitoring System (TPMS) – Required Federal Explanation 314
Temperature Gauge 67
Tensioners, Seat Belts 20
Tether Anchorage Points 48
Theft Protection, Radio 188
Three Way Catalytic Converter 318
Tilt the Steering Wheel 74
Time, Setting the 189
Tire Chains 276
Tire, How to Change a Flat 283
Tire Information 313
Tire Labeling 313
Tire Pressure Monitoring System (TPMS) 227, 314
Tires 271
Air Pressure 272
Chains 276
Checking Wear 273
Compact Spare 282
DOT Tire Quality Grading (U.S. Vehicles) 311
Inflation 271
Inspection 273
Labeling 313
Low Tire Pressure Indicator 62, 227
Maintenance 274
Pressure Monitoring System ... 227
Replacing 274
Rotating 274
Snow 275
Specifications 310
Tools, Tire Changing 283
Towing
A Trailer 232
Emergency Wrecker 303
TPMS (Tire Pressure Monitoring System) 227
Indicator 63, 228
Required Federal Explanation 314
Transmission
Checking Fluid Level, Automatic 256
Checking Fluid Level, Manual 257
Fluid Selection 256, 257
Identification Number 306
Shifting the Automatic 219
Shifting the Manual 217
Treadwear 311
Trip Meter 66
Turn Signals 60
Turn Signals and Headlights 71

U

Unexpected, Taking Care of the 281
Uniform Tire Quality Grading (U.S. only) 311

Unleaded Gasoline 198
USB Flash Memory Device Error
Messages 182
Used Oil, How to Dispose of 253

V

Vanity Mirror 101
Vehicle Capacity Load 208
Vehicle Dimensions 308
Vehicle Identification Number ... 306
Vehicle Stability Assist (VSA®),
aka Electronic Stability
Control (ESC), System
VSA OFF Indicator 230
Vehicle Stability Assist (VSA)
System 230
VSA OFF Indicator 62
VSA OFF Switch 231
VSA System Indicator 62
Vehicle Storage 278
Ventilation 106
VIN 306
Viscosity, Oil 251

W

WARNING, Explanation of iii
Warning Labels, Location of 53
Warranty Coverages (U.S.
only) 323
Washer, Windshield
Checking the Fluid Level 255
Fluid Level Indicator (Canada
only) 61
Operation 70
Wheels 271
Adjusting the Steering 74
Alignment and Balance 274
Compact Spare 282
Wrench, Nut 283
Windows
Operating the Power 92
Rear, Defogger 74
Windshield
Cleaning 70
Defroster 107
Washers 70, 255
Wipers, Windshield
Changing Blades 269
Operation 70
Worn Tires 273
Wrecker, Emergency Towing 303

X

XM® Radio 113, 132

Owner's Identification

OWNER _____

_____

ADDRESS _____
STREET

_____ _____ _____
CITY STATE/PROVINCE/TERRITORY ZIP CODE/ POSTAL CODE

V. I. N. _____

DELIVERY DATE _____
(Date sold to original retail purchaser)

DEALER NAME _____ DEALER NO. _____

ADDRESS _____
STREET

_____ _____ _____
CITY STATE/PROVINCE/TERRITORY ZIP CODE/ POSTAL CODE

OWNER'S SIGNATURE _____

DEALER'S SIGNATURE _____

This owner's manual should be considered a permanent part of the vehicle and should remain with the vehicle when it is sold.

This owner's manual covers all models of the Element. You may find descriptions of equipment and features that are not on your particular model.

The information and specifications included in this publication were in effect at the time of approval for printing. Honda Motor Co., Ltd. reserves the right, however, to discontinue or change specifications or design at any time without notice and without incurring any obligation whatsoever.

POUR CLIENTS CANADIEN
AVIS IMPORTANT: Si vous avez besoin d'un Manuel du Conducteur en français, veuillez demander à votre concessionnaire de commander le numéro de pièce 33SCVC70

Congratulations! Your selection of a 2010 Honda Element was a wise investment. It will give you years of driving pleasure.

One of the best ways to enhance the enjoyment of your new vehicle is to read this manual. In it, you will learn how to operate its driving controls and convenience items. Afterwards, keep this owner's manual in your vehicle so you can refer to it at any time.

Several warranties protect your new vehicle. Read the warranty booklet thoroughly so you understand the coverages and are aware of your rights and responsibilities.

Maintaining your vehicle according to the maintenance minder shown in the instrument panel helps to keep your driving trouble-free while it preserves your investment. When your vehicle needs maintenance, keep in mind that your dealer's staff is specially trained in servicing the many systems unique to your vehicle. Your dealer is dedicated to your satisfaction and will be pleased to answer any questions and concerns.

As you read this manual, you will find information that is preceded by a NOTICE symbol. This information is intended to help you avoid damage to your vehicle, other property, or the environment.

California Proposition 65 Warning

WARNING: This product contains or emits chemicals known to the State of California to cause cancer and birth defects or other reproductive harm.

Event Data Recorders

This vehicle is equipped with one or more devices commonly referred to as event data recorders. These devices record front seat belt use, front passenger seat occupancy, airbag deployment data, and the failure of any airbag system component. This data belongs to the vehicle owner and may not be accessed by anyone else except as legally required or with the permission of the vehicle owner.

Service Diagnostic Recorders

This vehicle is equipped with service-related devices that record information about powertrain performance. The data can be used to verify emissions law requirements and/or help technicians diagnose and solve service problems. It may also be combined with data from other sources for research purposes, but it remains confidential.

Your safety, and the safety of others, is very important. And operating this vehicle safely is an important responsibility.

To help you make informed decisions about safety, we have provided operating procedures and other information on labels and in this manual. This information alerts you to potential hazards that could hurt you or others.

Of course, it is not practical or possible to warn you about all the hazards associated with operating or maintaining your vehicle. You must use your own good judgement.

You will find this important safety information in a variety of forms, including:

- **Safety Labels** – on the vehicle.
- **Safety Messages** – preceded by a safety alert symbol ⚠ and one of three signal words: **DANGER**, **WARNING**, or **CAUTION.**

  These signal words mean:

⚠ DANGER	You WILL be KILLED or SERIOUSLY HURT if you don't follow instructions.
⚠ WARNING	You CAN be KILLED or SERIOUSLY HURT if you don't follow instructions.
⚠ CAUTION	You CAN be HURT if you don't follow instructions.

- **Safety Headings** – such as Important Safety Reminders or Important Safety Precautions.
- **Safety Section** – such as Driver and Passenger Safety.
- **Instructions** – how to use this vehicle correctly and safely.

This entire book is filled with important safety information – please read it carefully.

Important Handling Information

Your Element has higher ground clearance than a passenger vehicle designed for use only on pavement. Higher ground clearance has many advantages for off-highway driving. It allows you to travel over bumps, obstacles, and rough terrain. It also provides good visibility so you can anticipate problems earlier.

These advantages come at some cost. Because your vehicle is taller and rides higher off the ground, it has a high center of gravity. This means your vehicle can tip or roll over if you make abrupt turns. Utility vehicles have a significantly higher rollover rate than other types of vehicles. In a rollover crash, an unbelted person is significantly more likely to die than a person wearing a seat belt. As a reminder, make sure you and your passengers always wear seat belts.

For information on how to reduce the risk of rollover, read “Driving Guidelines” on page 214 of this manual and the *Off-Highway Driving Guidelines* section on page 238. Failure to operate your vehicle correctly might result in loss of control, a crash, or rollover.

Contents

Your Vehicle at a Glance (main controls) 3

Driver and Passenger Safety (seat belts, SRS, and child protection) 5

Instruments and Controls (indicators, gauges, dashboard, and steering column) 55

Features (heating and cooling, audio, steering wheel, cruise control, and other convenience items) 103

Before Driving (fuel, vehicle break-in, and cargo loading) 197

Driving (engine and transmission operation) 213

Maintenance (minder, fluid checking, minor services, and vehicle storage) 241

Taking Care of the Unexpected (flat tire, jump starting, overheating, and fuses) 281

Technical Information (vehicle specifications, tires, and emissions controls) 305

Warranty and Customer Relations (U.S. and Canada only) (warranty and contact information) 321

Index I

Service Information Summary (fluid capacities and tire pressures) ..... **last page**

Overview of Contents

Contents
A convenient reference to the sections in this manual.

Your Vehicle at a Glance
A quick reference to the main controls in your vehicle.

Driver and Passenger Safety
Important information about the proper use and care of your vehicle's seat belts, an overview of the supplemental restraint system, and valuable information on how to protect children with child restraints.

Instruments and Controls
Explains the purpose of each instrument panel indicator and gauge, and how to use the controls on the dashboard and steering column.

Features
How to operate the heating and air conditioning system, the audio system, and other convenience features.

Before Driving
What gasoline to use, how to break-in your new vehicle, and how to load luggage and other cargo.

Driving
The proper way to start the engine, shift the transmission, and park; plus what you need to know if you're planning to tow a trailer.

Maintenance
The maintenance minder shows you when you need to take your vehicle to the dealer for maintenance service. There is also a list of things to check and instructions on how to check them.

Taking Care of the Unexpected
This section covers several problems motorists sometimes experience, and details how to handle them.

Technical Information
ID numbers, dimensions, capacities, and technical information.

Warranty and Customer Relations (U.S. and Canada only)
A summary of the warranties covering your new vehicle, and how to contact us for any reason. Refer to your warranty manual for detailed information.

Index

Service Information Summary
A summary of the information you need when you pull up to the fuel pump.

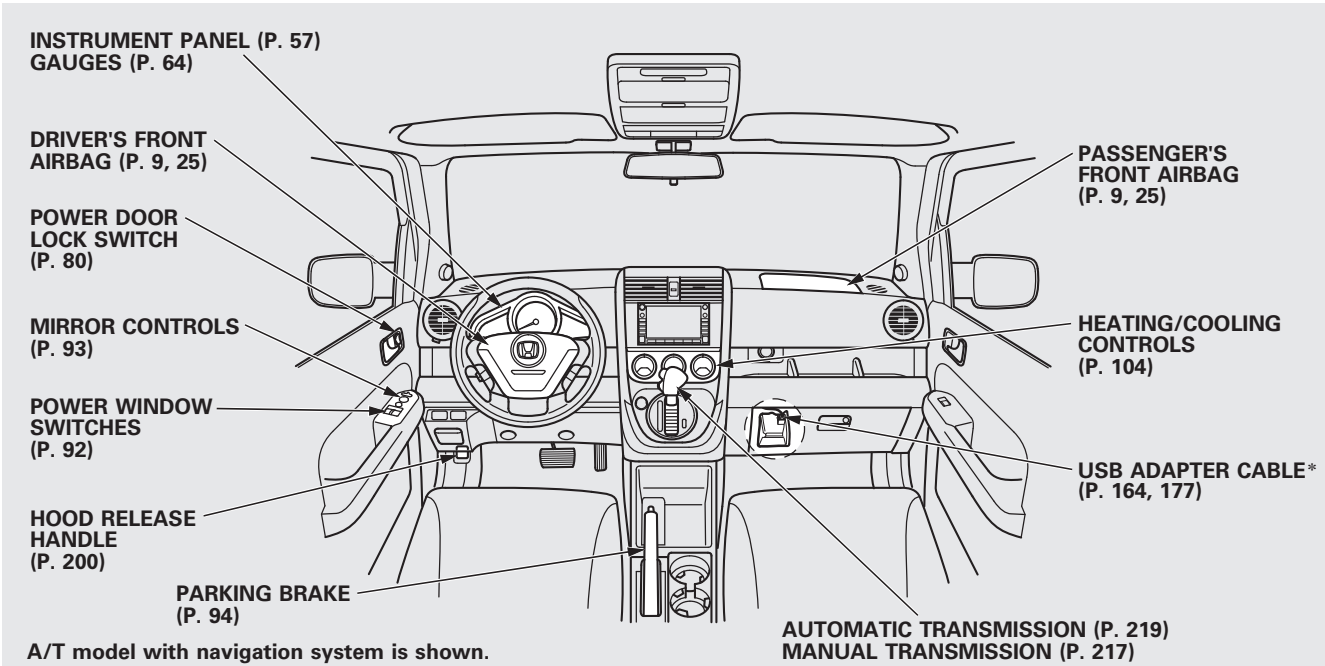

A/T model with navigation system is shown.

*: If equipped

CONTINUED

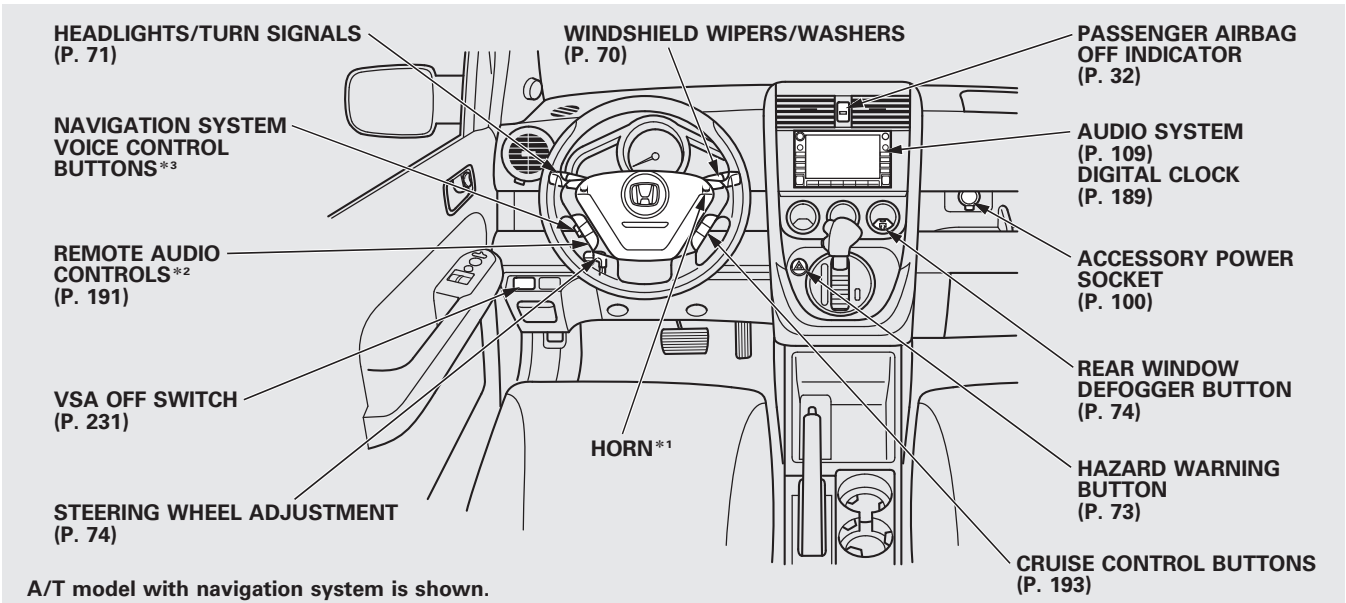

A/T model with navigation system is shown.

*1: To use the horn, press the center pad of the steering wheel.
*2: If equipped
*3: Only on vehicles equipped with navigation system. Refer to the navigation system manual.

This section gives you important information about how to protect yourself and your passengers. It shows you how to use seat belts. It explains how your airbags work. And it tells you how to properly restrain infants and children in your vehicle.

Important Safety Precautions 6
Your Vehicle's Safety Features 7
Seat Belts 8
Airbags 9
Protecting Adults and Teens 11
1. Close and Lock the Doors 11
2. Adjust the Front Seats 11
3. Adjust the Seat-Backs 12
4. Adjust the Head Restraints 13
5. Fasten and Position the Seat Belts 14
6. Maintain a Proper Sitting Position 15
Advice for Pregnant Women 16
Additional Safety Precautions 16
Additional Information About Your Seat Belts 18
Seat Belt System Components 18
Lap/Shoulder Belt 19
Automatic Seat Belt Tensioners 20
Seat Belt Maintenance 20
Additional Information About Your Airbags 22
Airbag System Components 22
How Your Front Airbags Work 25
How Your Side Airbags Work 28
How Your Side Curtain Airbags Work 30
How the SRS Indicator Works 31
How the Side Airbag Off Indicator Works 32
How the Passenger Airbag Off Indicator Works 32
Airbag Service 33
Additional Safety Precautions 34
Protecting Children – General Guidelines 35
All Children Must Be Restrained 35
All Children Should Sit in a Back Seat 36
The Passenger's Front Airbag Can Pose Serious Risks 36
If You Must Drive with Several Children 38
If a Child Requires Close Attention 38
Additional Safety Precautions 39
Protecting Infants and Small Children 40
Protecting Infants 40
Protecting Small Children 41
Selecting a Child Seat 42
Installing a Child Seat 43
Installing a Child Seat with LATCH 44
Installing a Child Seat with a Lap/Shoulder Belt 46
Installing a Child Seat with a Tether 48
Protecting Larger Children 49
Checking Seat Belt Fit 49
Using a Booster Seat 50
When Can a Larger Child Sit in Front 50
Additional Safety Precautions 51
Carbon Monoxide Hazard 52
Safety Labels 53

Important Safety Precautions

You'll find many safety recommendations throughout this section, and throughout this manual. The recommendations on this page are the ones we consider to be the most important.

Always Wear Your Seat Belt
A seat belt is your best protection in all types of collisions. Airbags are designed to supplement seat belts, not replace them. So even though your vehicle is equipped with airbags, make sure you and your passengers always wear your seat belts, and wear them properly (see page 14).

Restrain All Children
Children age 12 and under should ride properly restrained in a back seat, not the front seat. Infants and small children should be restrained in a child seat. Larger children should use a booster seat and a lap/shoulder belt until they can use the belt properly without a booster seat (see pages 35 – 51).

Be Aware of Airbag Hazards
While airbags can save lives, they can cause serious or fatal injuries to occupants who sit too close to them, or are not properly restrained. Infants, young children, and short adults are at the greatest risk. Be sure to follow all instructions and warnings in this manual.

Don't Drink and Drive
Alcohol and driving don't mix. Even one drink can reduce your ability to respond to changing conditions, and your reaction time gets worse with every additional drink. So don't drink and drive, and don't let your friends drink and drive, either.

Pay Appropriate Attention to the Task of Driving Safely
Engaging in mobile phone conversation or other activities that keep you from paying close attention to the road, other vehicles and pedestrians could lead to a crash. Remember, situations can change quickly, and only you can decide when it is safe to divert attention away from driving.

Control Your Speed

Excessive speed is a major factor in crash injuries and deaths. Generally, the higher the speed, the greater the risk, but serious injuries can also occur at lower speeds. Never drive faster than is safe for current conditions, regardless of the maximum speed posted.

Keep Your Vehicle in Safe Condition
Having a tire blowout or a mechanical failure can be extremely hazardous. To reduce the possibility of such problems, check your tire pressures and condition frequently, and perform all regularly scheduled maintenance (see page 243).

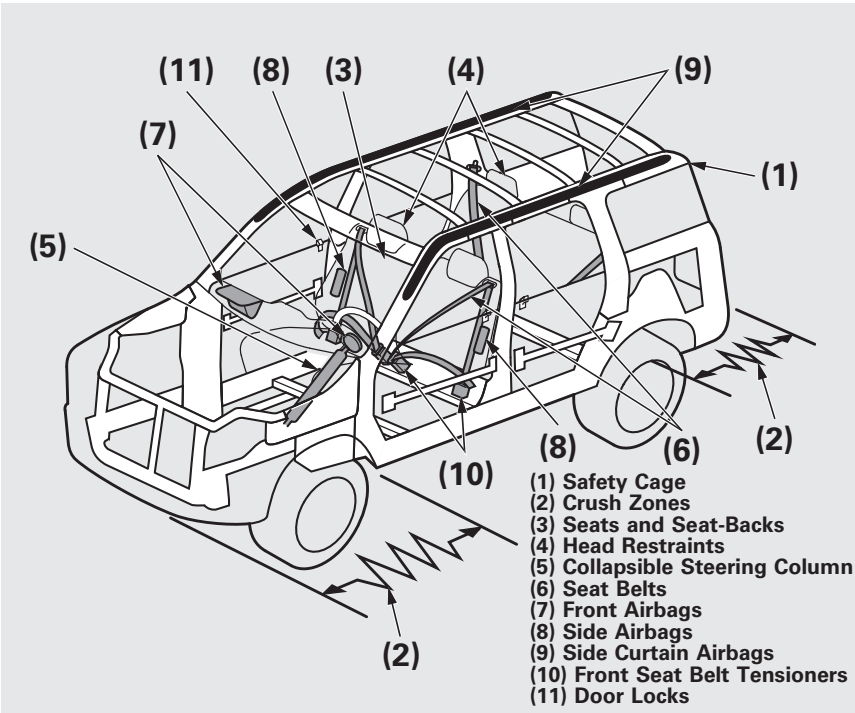

Your vehicle is equipped with many features that work together to protect you and your passengers during a crash.

Some features do not require any action on your part. These include a strong steel framework that forms a safety cage around the passenger compartment, front and rear crush zones, a collapsible steering column, and tensioners that tighten the seat belts in a crash.

However, you and your passengers can't take full advantage of these features unless you remain sitting in the correct position and ***always wear your seat belts.*** In fact, some safety features can contribute to injuries if they are not used properly.

The following pages explain how you can take an active role in protecting yourself and your passengers.

Seat Belts

Your vehicle is equipped with seat belts in all seating positions.

Your seat belt system also includes an indicator on the instrument panel and a beeper to remind you and your passengers to fasten your seat belts.

Why Wear Seat Belts

Seat belts are the single most effective safety device for adults and larger children. (Infants and smaller children must be properly restrained in child seats.)

Not wearing a seat belt properly increases the chance of serious injury or death in a crash, even though your vehicle has airbags.

In addition, most states, all Canadian provinces and territories require you to wear seat belts.

⚠WARNING

Not wearing a seat belt properly increases the chance of serious injury or death in a crash, even though your vehicle has airbags.

Be sure you and your passengers always wear seat belts and wear them properly.

When properly worn, seat belts:

- Keep you connected to the vehicle so you can take advantage of the vehicle's built-in safety features.
- Help protect you in almost every type of crash, including:
  - frontal impacts
  - side impacts
  - rear impacts
  - rollovers
- Help keep you from being thrown against the inside of the vehicle and against other occupants.
- Keep you from being thrown out of the vehicle.
- Help keep you in a good position should the airbags ever deploy. A good position reduces the risk of injury from an inflating airbag and allows you to get the best advantage from the airbag.

Of course, seat belts cannot completely protect you in every crash. But in most cases, seat belts can reduce your risk of serious injury.

What You Should Do:

Always wear your seat belt, and make sure you wear it properly.

Airbags

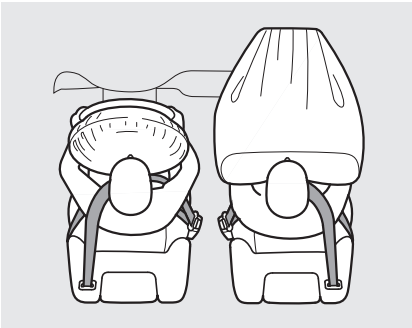

Your vehicle has a supplemental restraint system (SRS) with front airbags to help protect the heads and chests of the driver and a front seat passenger during a moderate to severe frontal collision (see page 25 for more information on how your front airbags work).

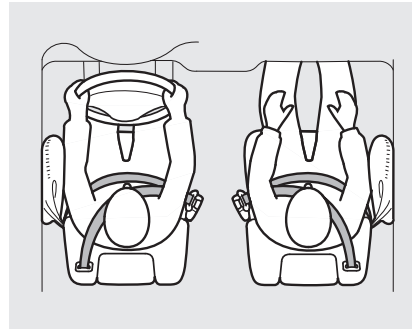

Your vehicle also has side airbags to help protect the upper torso of the driver or a front seat passenger during a moderate to severe side impact (see page 28 for more information on how your side airbags work).

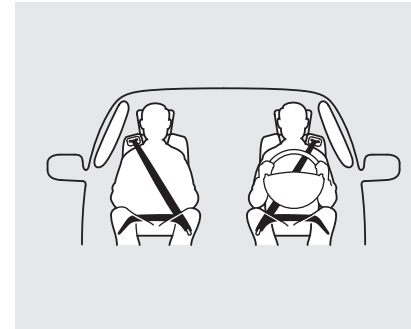

In addition, your vehicle has side curtain airbags to help protect the heads of the driver, front passenger, and passengers in the outer rear seating positions during a moderate to severe side impact or rollover (see page 30 for more information on how your side curtain airbags work).

CONTINUED

The most important things you need to know about your airbags are:

- ***Airbags do not replace seat belts.*** They are designed to supplement the seat belts.
- ***Airbags offer no protection in rear impacts, or minor frontal or side collisions.***
- ***Airbags can pose serious hazards.*** To do their job, airbags must inflate with tremendous force. So while airbags help save lives, they can cause minor injuries or more serious or even fatal injuries if occupants are not properly restrained or sitting properly.

What you should do: Always wear your seat belt properly, and sit upright and as far back from the steering wheel as possible while allowing full control of the vehicle. A front passenger should move their seat as far back from the dashboard as possible.

The rest of this section gives more detailed information about how you can maximize your safety.

Remember however, that no safety system can prevent all injures or deaths that can occur in a severe crash, even when seat belts are properly worn and the airbags deploy.

Introduction

The following pages provide instructions on how to properly protect the driver, adult passengers, and teenage children who are large enough and mature enough to drive or ride in the front.

See pages 35 – 51 for important guidelines on how to properly protect infants, small children, and larger children who ride in your vehicle.

1. Close and Lock the Doors

After everyone has entered the vehicle, be sure the doors, the hatch, and the tailgate are closed and locked.

Your vehicle has a door and tailgate open indicator on the instrument panel to indicate when a specific door, the tailgate or the hatch is not tightly closed.

Locking the doors, the hatch, and the tailgate reduces the chance of someone being thrown out of the vehicle during a crash, and it helps prevent passengers from accidentally opening a door, the hatch, or the tailgate and falling out.

Locking the doors, the hatch, or the tailgate also helps prevent an outsider from unexpectedly opening a door when you come to a stop.

See page 80 for how to lock the doors, and page 61 for how the door and tailgate indicator system works.

2. Adjust the Front Seats

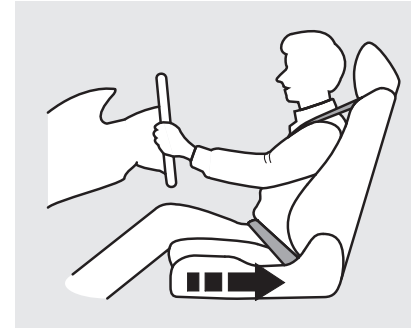

Adjust the driver's seat as far to the rear as possible while allowing you to maintain full control of the vehicle. Have a front passenger adjust their seat as far to the rear as possible.

If you sit too close to the steering wheel or dashboard, you can be seriously injured by an inflating front airbag, or by striking the steering wheel or dashboard.

CONTINUED

The National Highway Traffic Safety Administration and Transport Canada recommend that drivers allow at least 10 inches (25 cm) between the center of the steering wheel and the chest. In addition to adjusting the seat, you can adjust the steering wheel up and down (see page 74).

If you cannot get far enough away from the steering wheel and still reach the controls, we recommend that you investigate whether some type of adaptive equipment may help.

⚠ WARNING

Sitting too close to a front airbag can result in serious injury or death if the front airbags inflate.

Always sit as far back from the front airbags as possible.

Once a seat is adjusted correctly, rock it back and forth to make sure it is locked in position.

See page 83 for how to adjust the front seats.

3. Adjust the Seat-Backs

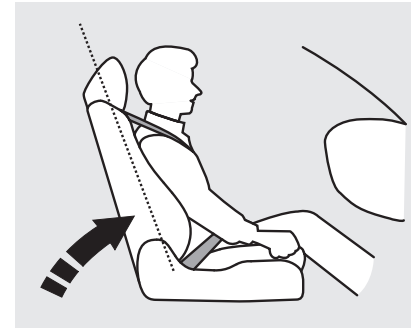

Adjust the driver's seat-back to a comfortable, upright position, leaving ample space between your chest and the airbag cover in the center of the steering wheel.

Passengers with adjustable seat-backs should also adjust their seat-back to a comfortable, upright position.

⚠WARNING

Reclining the seat-back too far can result in serious injury or death in a crash.

Adjust the seat-back to an upright position, and sit well back in the seat.

Reclining a seat-back so that the shoulder part of the belt no longer rests against the occupant's chest reduces the protective capability of the belt. It also increases the chance of sliding under the belt in a crash and being seriously injured. The farther a seat-back is reclined, the greater the risk of injury.

See page 83 for how to adjust the seat-backs.

4. Adjust the Head Restraints

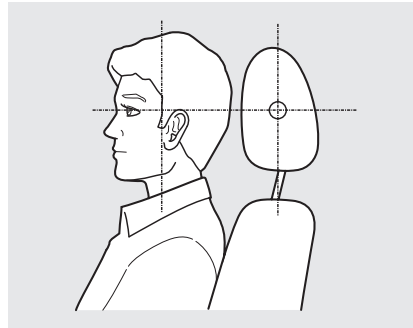

Adjust the driver's head restraint so the center of the back of your head rests against the center of the restraint.

Have passengers adjust their head restraints properly as well. Taller persons should adjust their restraint as high as possible.

⚠WARNING

Improperly positioning head restraints reduces their effectiveness and you can be seriously injured in a crash.

Make sure head restraints are in place and positioned properly before driving.

Properly adjusted head restraints will help protect occupants from whiplash and other crash injuries.

See page 85 for how to adjust the head restraints.

5. Fasten and Position the Seat Belts

Insert the latch plate into the buckle, then tug on the belt to make sure the belt is securely latched. Check that the belt is not twisted, because a twisted belt can cause serious injuries in a crash.

Position the lap part of the belt as low as possible across your hips, then pull up on the shoulder part of the belt so the lap part fits snugly. This lets your strong pelvic bones take the force of a crash and reduces the chance of internal injuries.

If necessary, pull up on the belt again to remove any slack, then check that the belt rests across the center of your chest and over your shoulder.

This spreads the forces of a crash over the strongest bones in your upper body.

⚠ WARNING

Improperly positioning the seat belts can cause serious injury or death in a crash.

Make sure all seat belts are properly positioned before driving.

Never place the shoulder portion of a lap/shoulder belt under your arm or behind your back. This could cause very serious injuries in a crash.

If a seat belt does not seem to work properly, it may not protect the occupant in a crash.

No one should sit in a seat with an inoperative seat belt. Using a seat belt that is not working properly can result in serious injury or death. Have your dealer check the belt as soon as possible.

See page 18 for additional information about your seat belts and how to take care of them.

6. Maintain a Proper Sitting Position

After all occupants have adjusted their seats and head restraints, and put on their seat belts, it is very important that they continue to sit upright, well back in their seats, with their feet on the floor, until the vehicle is safely parked and the engine is off.

Sitting improperly can increase the chance of injury during a crash. For example, if an occupant slouches, lies down, turns sideways, sits forward, leans forward or sideways, or puts one or both feet up, the chance of injury during a crash is greatly increased.

In addition, an occupant who is out of position in the front seat can be seriously or fatally injured in a crash by striking interior parts of the vehicle or being struck by an inflating front airbag.

⚠ WARNING

Sitting improperly or out of position can result in serious injury or death in a crash.

Always sit upright, well back in the seat, with your feet on the floor.

Advice for Pregnant Women

If you are pregnant, the best way to protect yourself and your unborn child when driving or riding in a vehicle is to always wear a seat belt, and keep the lap part of the belt as low as possible across the hips.

When driving, remember to sit upright and adjust the seat as far back as possible while allowing full control of the vehicle. When riding as a front passenger, adjust the seat as far back as possible.

This will reduce the risk of injuries to both you and your unborn child that can be caused by a crash or an inflating front airbag.

Each time you have a checkup, ask your doctor if it's okay for you to drive.

Additional Safety Precautions

- ***Never let passengers ride in the cargo area or on top of a folded-down back seat.*** If they do, they could be very seriously injured in a crash.
- ***Passengers should not stand up or change seats while the vehicle is moving.*** A passenger who is not wearing a seat belt during a crash or emergency stop can be thrown against the inside of the vehicle, against other occupants, or out of the vehicle.
- ***Two people should never use the same seat belt.*** If they do, they could be very seriously injured in a crash.

- ***Do not put any accessories on seat belts.*** Devices intended to improve occupant comfort or reposition the shoulder part of a seat belt can reduce the protective capability of the belt and increase the chance of serious injury in a crash.
- ***Do not place hard or sharp objects between yourself and a front airbag.*** Carrying hard or sharp objects on your lap, or driving with a pipe or other sharp object in your mouth, can result in injuries if your front airbag inflates.
- ***Do not attach or place objects on the front airbag covers.*** Objects on the covers marked "SRS AIRBAG" could interfere with the proper operation of the airbags or be propelled inside the vehicle and hurt someone if the airbags inflate.
- ***Do not attach hard objects on or near a door.*** If a side airbag or a side curtain airbag inflates, a cup holder or other hard object attached on or near the door could be propelled inside the vehicle and hurt someone.
- ***Keep your hands and arms away from the airbag covers.*** If your hands or arms are close to an airbag cover, they could be injured if the front airbag inflates.
- ***Do not cover or replace front seat-back covers without consulting your dealer.*** Improperly replacing or covering front seat-back covers can prevent your side airbags from inflating during a side impact.

Additional Information About Your Seat Belts

Seat Belt System Components
Your seat belt system includes lap/shoulder belts in all four seating positions. The front seat belts are also equipped with automatic seat belt tensioners.

This system uses the same sensors as the front airbags to monitor whether the front seat belts are latched or unlatched, and how much weight is on the front passenger's seat (see page 27).

The seat belt system includes an indicator on the instrument panel and a beeper to remind you and your passengers to fasten your seat belts.

This system monitors the front seat belts. If you turn the ignition switch to the ON (II) position before your seat belt is fastened, the beeper will sound and the indicator will flash. If your seat belt is not fastened before the beeper stops, the indicator will stop flashing but remain on.

If a front passenger does not fasten their seat belt, the indicator will come on about 6 seconds after the ignition switch is turned to the ON (II) position.

If either the driver or a front passenger does not fasten their seat belt while driving, the beeper will sound and the indicator will flash again at regular intervals.

When no one is sitting in the front passenger's seat, or a child or small adult is riding there, the indicator should not come on and the beeper should not sound.

If the indicator comes on or the beeper sounds when the driver's seat belt is latched and there is no front seat passenger and no items on the front seat, something may be interfering with the monitoring system. Look for and remove:

- Any items under the front passenger's seat.
- Any object(s) hanging on the seat or in the seat-back pocket.
- Any object(s) touching the rear of the seat-back.

If no obstructions are found, have your vehicle checked by a dealer.

Lap/Shoulder Belt
The lap/shoulder belt goes over your shoulder, across your chest, and across your hips.

To fasten the belt, insert the latch plate into the buckle, then tug on the belt to make sure the buckle is latched (see page 14 for how to properly position the belt).

To unlock the belt, press the red PRESS button on the buckle. Guide the belt across your body so that it retracts completely. After exiting the vehicle, be sure the belt is out of the way and will not get closed in the door.

All seat belts have an emergency locking retractor. In normal driving, the retractor lets you move freely in your seat while it keeps some tension on the belt. During a collision or sudden stop, the retractor automatically locks the belt to help restrain your body.

The seat belts in all positions except the driver's have a lockable retractor that must be activated to secure a child seat (see page 46).

If the shoulder part of the belt is pulled all the way out, the lockable retractor will activate. The belt will retract, but it will not allow the passenger to move freely.

To deactivate the lockable retractor, unlatch the buckle and let the seat belt fully retract. To refasten the seat belt, pull it out only as far as needed.

Additional Information About Your Seat Belts

Automatic Seat Belt Tensioners

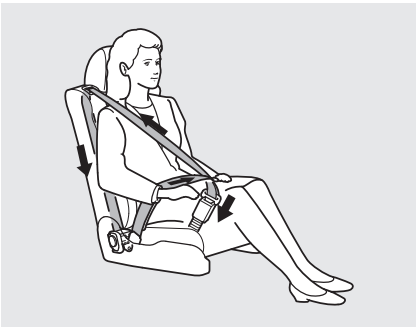

For added protection, the front seat belts are equipped with automatic seat belt tensioners. When activated, the tensioners immediately tighten the belts to help hold the driver and a front passenger in position.

The tensioners are designed to activate in any collision severe enough to cause the front airbags to deploy, or if a sensor detects your vehicle is about to roll over (see page 30).

If a side curtain airbag deploys during a side impact, the tensioner on that side of the vehicle will also deploy.

The tensioners can also be activated during a collision in which the front airbags *do not deploy.* In this case, the airbags would not be needed, but the extra tension in the seat belt could be helpful.

When the tensioners are activated, the seat belts will remain tight until they are unbuckled.

Seat Belt Maintenance

For safety, you should check the condition of your seat belts regularly.

Pull each belt out fully, and look for frays, cuts, burns, and wear. Check that the latches work smoothly and the belts retract easily. If a belt does not retract easily, cleaning the belt may correct the problem (see page 268). Any belt that is not in good condition or working properly will not provide good protection and should be replaced as soon as possible.

Honda provides a limited warranty on seat belts. See your *Honda Warranty Information* booklet for details.

If a seat belt is worn during a crash, it must be replaced by your dealer. A belt that has been worn during a crash may not provide the same level of protection in a subsequent crash.

The dealer should also inspect the anchors for damage and replace them if needed. If the automatic seat belt tensioners activate during a crash, they must be replaced.

⚠ WARNING

Not checking or maintaining seat belts can result in serious injury or death if the seat belts do not work properly when needed.

Check your seat belts regularly and have any problem corrected as soon as possible.

Additional Information About Your Airbags

Airbag System Components

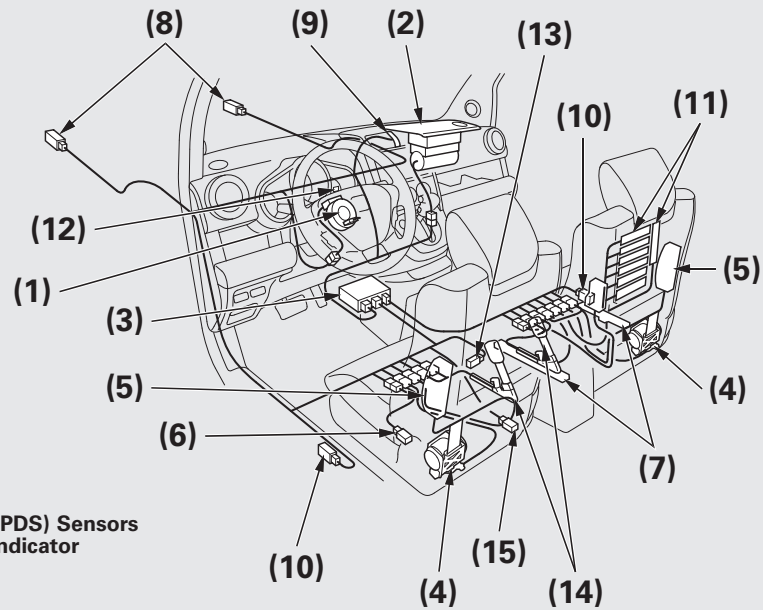

(1) Driver's Front Airbag
(2) Passenger's Front Airbag
(3) Control Unit
(4) Front Seat Belt Tensioners
(5) Side Airbags
(6) Driver's Seat Position Sensor
(7) Front Passenger's Weight Sensors
(8) Front Impact Sensors
(9) Passenger Airbag Off Indicator
(10) Side Impact Sensors (First)
(11) Occupant Position Detection System (OPDS) Sensors
(12) Supplemental Restraint System (SRS) Indicator
(13) Rollover Sensor
(14) Seat Belt Buckle Tensioners
(15) Rear Safing Sensor

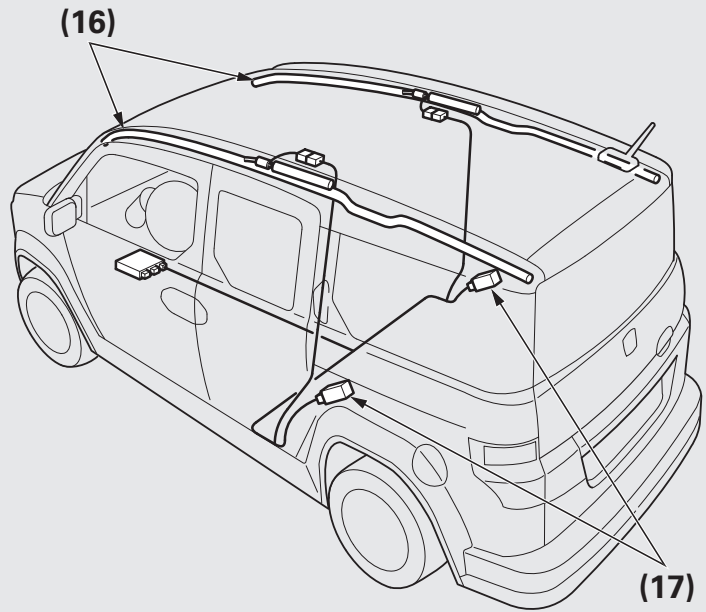

(16) Side Curtain Airbags
(17) Side Impact Sensors (Second)

Your airbag system includes:

- Two SRS (supplemental restraint system) front airbags. The driver's airbag is stored in the center of the steering wheel; the front passenger's airbag is stored in the dashboard. Both are marked “SRS AIRBAG” (see page 25).
- Two side airbags, one for the driver and one for a front passenger. The airbags are stored in the outer edges of the seat-backs. Both are marked “SIDE AIRBAG” (see page 28).
- Two side curtain airbags, one for each side of the vehicle. The airbags are stored in the ceiling, above the side windows. The front and rear pillars are marked “SIDE CURTAIN AIRBAG” (see page 30).

CONTINUED

Additional Information About Your Airbags

- Automatic front seat belt tensioners (see page 20).
- Sensors that can detect a moderate to severe front impact, side impact, or rollover.
- Sensors that can detect whether a child is in the passenger's side airbag path and signal the control unit to turn the airbag off (see page 29).
- Sensors that can detect whether the driver's seat belt and the front passenger's seat belt are latched or unlatched (see page 18).
- A driver's seat position sensor that monitors the distance of the seat from the front airbag. If the seat is too far forward, the airbag will inflate with less force (see page 27).
- Weight sensors that monitor the weight on the front passenger's seat. If the weight is about 65 lbs (29 kg) or less (the weight of an infant or small child), the passenger's front airbag will be turned off (see page 27).
- A sophisticated electronic system that continually monitors and records information about the sensors, the control unit, the airbag activators, the seat belt tensioners, and driver and front passenger seat belt use when the ignition switch is in the ON (II) position.
- An indicator on the instrument panel that alerts you to a possible problem with your airbags, sensors, or seat belt tensioners (see page 31).
- An indicator on the instrument panel that alerts you that the passenger's side airbag has been turned off (see page 32).
- An indicator on the dashboard that alerts you that the passenger's front airbag has been turned off (see page 32).
- Emergency backup power in case your vehicle's electrical system is disconnected in a crash.

How Your Front Airbags Work

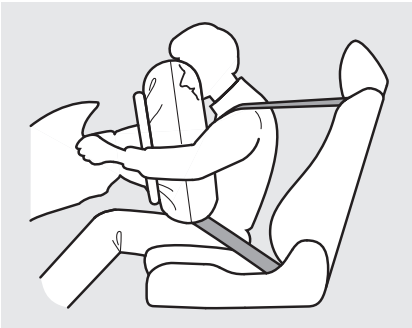

If you ever have a moderate to severe frontal collision, sensors will detect the vehicle's rapid deceleration.

If the rate of deceleration is high enough, the control unit will inflate the driver's and front passenger's airbags, at the time and with the force needed.

During a frontal crash, your seat belt restrains your lower body and torso, and the front airbag helps protect your head and chest.

Although both airbags normally inflate within a split second of each other, it is possible for only one airbag to deploy.

This can happen if the severity of a collision is at the margin, or threshold, that determines whether or not the airbags will deploy. In such cases, the seat belt will provide sufficient protection, and the supplemental protection offered by the airbag would be minimal.

Only the driver's airbag can deploy if there is no passenger in the front seat, or if the advanced airbag system has turned the passenger's airbag off (see page 27).

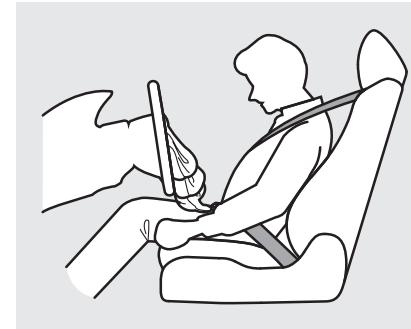

After inflating, the front airbags immediately deflate, so they won't interfere with the driver's visibility, or the ability to steer or operate other controls.

CONTINUED

Additional Information About Your Airbags

The total time for inflation and deflation is one-tenth of a second, so fast that most occupants are not aware that the airbags deployed until they see them lying in their laps.

After a crash, you may see what looks like smoke. This is actually powder from the airbag's surface. Although the powder is not harmful, people with respiratory problems may experience some temporary discomfort. If this occurs, get out of the vehicle as soon as it is safe to do so.

Dual-Stage Airbags

Your front airbags are dual-stage airbags. This means they have two inflation stages that can be ignited sequentially or simultaneously, depending on crash severity.

In a ***more severe*** crash, both stages will ignite simultaneously to provide the quickest and greatest protection.

In a ***less severe*** crash, the first stage will ignite first, then the second stage will ignite a split second later. This provides longer airbag inflation time with a little less force.

Dual-Threshold Airbags

Your front airbags are also dual-threshold airbags. Airbags with this feature have two deployment thresholds that depend on whether sensors detect the occupant is wearing a seat belt or not.

If the occupant's belt is ***not latched,*** the airbag will deploy at a slightly lower threshold, because the occupant would need extra protection.

If the occupant's belt is ***latched,*** the airbag will inflate at a slightly higher threshold, when the airbag would be needed to supplement the protection provided by the seat belt.

Advanced Airbags
Your front airbags are also advanced airbags. The main purpose of this feature is to help prevent airbag-caused injuries to short drivers and children or small statured adults who ride in front.

For both advanced airbags to work properly:

- Occupants must sit upright and wear their seat belts properly.
- Do not spill any liquids on or under the seats, cover the sensors, or put any objects or metal items under the front seats.

Failure to follow these instructions could damage the sensors or prevent them from working properly.

The driver's advanced front airbag system includes a seat position sensor under the seat. If the seat is too far forward, the airbag will inflate with less force, regardless of the severity of the impact.

If there is a problem with the sensor, the SRS indicator will come on, and the airbag will inflate in the normal manner regardless of the driver's seating position.

The passenger's advanced front airbag system has weight sensors under the seat. Although Honda does not encourage carrying an infant or small child in front, if the sensors detect the weight of an infant or small child (up to about 65 lbs or 29 kg), the system will automatically turn the passenger's front airbag off.

Be aware that objects placed on the passenger's seat can also cause the airbag to be turned off.

CONTINUED

Additional Information About Your Airbags

When the passenger airbag gets turned off by the weight sensors, a "passenger airbag off" indicator in the center of the dashboard comes on (see page 32).

If the weight sensors detect there is no passenger in the front seat, the airbag is automatically turned off. However, the passenger airbag off in this situation indicator will not come on.

To ensure that the passenger's advanced front airbag system will work properly, ***do not do anything that would increase or decrease the weight on the front passenger's seat.*** This includes:

- A rear passenger pushing or pulling on the back of the front passenger's seat.
- Moving the front seat forcibly back against cargo on the seat or floor behind it.
- Hanging heavy items on the front passenger seat, or placing heavy items in the seat-back pocket.
- Moving the front seat or seat-back forcibly back against the folded rear seat.
- Back seat passengers should not wedge objects or intentionally force their feet under front passenger seat.

If your vehicle has optional floor mats, make sure the mat behind the front passenger's seat is hoocked to the floor mat anchor (see page 268). If it is not, the mat may interfere with the proper operation of the sensors and operation of the seat.

How Your Side Airbags Work

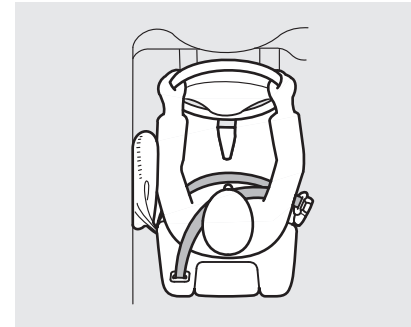

If you ever have a moderate to severe side impact, sensors will detect rapid acceleration and signal the control unit to instantly inflate either the driver's or the passenger's side airbag.

Only one airbag will deploy during a side impact. If the impact is on the passenger's side, the passenger's side airbag will deploy even if there is no passenger.

To get the best protection from the side airbags, front seat occupants should wear their seat belts and sit upright and well back in their seats.

Side Airbag Cutoff System

Your vehicle has a side airbag cutoff system designed primarily to protect a child riding in the front passenger's seat.

Although Honda does not encourage children to ride in front, if the position sensors detect a child has leaned into the side airbag's deployment path, the airbag will shut off.

The side airbag may also shut off if a short adult leans sideways, or a larger adult slouches and leans sideways into the airbag's deployment path.

Objects placed on the front passenger seat can also cause the side airbag to be shut off.

If the side airbag off indicator comes on (see page 32), have the passenger sit upright. Once the passenger is out of the airbag's deployment path, the system will turn the airbag back on, and the indicator will go out.

There will be some delay between the moment the passenger moves into or out of the airbag deployment path and when the indicator comes on or goes off.

A front seat passenger should not use a cushion or another object as a backrest. It may prevent the cutoff system from working properly.

How Your Side Curtain Airbags Work

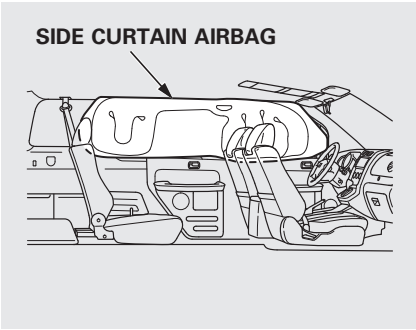

In a Side Impact
In a moderate to severe side impact, sensors will detect rapid acceleration and signal the control unit to instantly inflate the side curtain airbag and activate the seat belt tensioner on the driver's or the passenger's side of the vehicle.

If the impact is on the passenger's side, the passenger's side curtain airbag will inflate even if there are no occupants on that side of the vehicle.

In a Rollover
If the rollover sensor detects your vehicle is about to roll over, it signals the control unit, which immediately deploys both side curtain airbags and activates both front seat belt tensioners.

The airbag on the passenger's side will deploy, and the seat belt tensioner will activate, even if there are no passengers on that side of the vehicle.

To get the best protection from the side curtain airbags, occupants should wear their seat belts and sit upright and well back in their seats.

How the SRS Indicator Works

The SRS indicator alerts you to a potential problem with your airbags or seat belt tensioners.

When you turn the ignition switch to the ON (II) position, this indicator comes on briefly then goes off. This tells you the system is working properly.

If the indicator comes on at any other time, or does not come on at all, you should have the system checked by your dealer. For example:

- If the SRS indicator does not come on after you turn the ignition switch to the ON (II) position.
- If the indicator stays on after the engine starts.
- If the indicator comes on or flashes on and off while you drive.

If you see any of these indications, the airbags and seat belt tensioners may not work properly when you need them.

⚠ WARNING

Ignoring the SRS indicator can result in serious injury or death if the airbag systems or tensioners do not work properly.

Have your vehicle checked by a dealer as soon as possible if the SRS indicator alerts you to a possible problem.

How the Side Airbag Off Indicator Works

U.S. Canada

This indicator alerts you that the passenger's side airbag has been automatically shut off. It does ***not*** mean there is a problem with your side airbags.

When you turn the ignition switch to the ON (II) position, the indicator should come on briefly and then go off (see page 59). If it doesn't come on, stays on, or comes on while driving without a passenger in the front seat, have the system checked.

How the Passenger Airbag Off Indicator Works

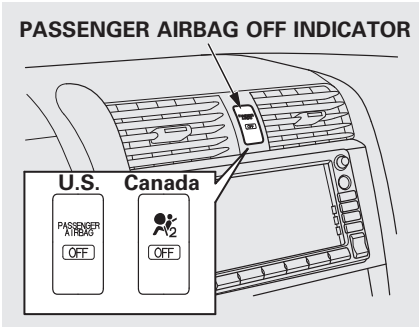

This indicator alerts you that the passenger's front airbag has been shut off because weight sensors detect about 65 lbs (29 kg) or less (the weight of an infant or small child) on the front passenger's seat. It does ***not mean*** there is a problem with the airbag.

Be aware that objects placed on the front seat can cause the indicator to come on.

If no weight is detected on the front seat, the airbag will be automatically shut off. However, the indicator will not come on.

The passenger airbag off indicator may come on and off repeatedly if the total weight on the seat is near the airbag cutoff threshold.

If an adult or teenage passenger is riding in front, move the seat as far to the rear as possible, and have the passenger sit upright and wear the seat belt properly.

If the indicator comes on with no front seat passenger and no objects on the seat, or with an adult riding there, something may be interfering with the weight sensors. Look for and remove:

- Any items under the front passenger's seat.
- Any object(s) hanging on the seat or in the seat-back pocket.
- Any object(s) touching the rear of the seat-back.

If no obstructions are found, have your vehicle checked by a dealer as soon as possible.

Airbag Service

Your airbag systems are virtually maintenance free, and there are no parts you can safely service. However, you must have your vehicle serviced if:

- ***An airbag ever inflates.*** Any airbag that has deployed must be replaced along with the control unit and other related parts. Any seat belt tensioner that activates must also be replaced.

  Do not try to remove or replace any airbag by yourself. This must be done by an authorized dealer or a knowledgeable body shop.
- ***The SRS indicator alerts you to a problem.*** Take your vehicle to an authorized dealer as soon as possible. If you ignore this indication, your airbags may not operate properly.
- ***If your vehicle has a moderate to severe impact.*** Even if your airbags do not inflate, your dealer should inspect the driver's seat position sensor, the front passenger's weight sensors, the front seat belt tensioners, and all seat belts and their anchors worn during a crash to make sure they are operating properly.

Additional Information About Your Airbags

Additional Safety Precautions

- ***Do not attempt to deactivate your airbags.*** Together, airbags and seat belts provide the best protection.
- ***Do not tamper with airbag components or wiring for any reason.*** Tampering could cause the airbags to deploy, possibly causing very serious injury.
- ***Do not expose the front passenger's seat-back to liquid.*** If water or another liquid soaks into the seat-back, it can prevent the side airbag cutoff system from working properly.
- ***Do not remove or modify a front seat without consulting your dealer.*** This could make the driver's seat position sensor or the front passenger's weight sensors ineffective. If it is necessary to remove or modify a front seat to accommodate a person with disabilities, first contact Honda Automobile Customer Service at (800) 999-1009.

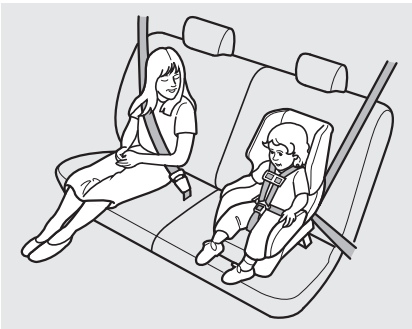

Children depend on adults to protect them. However, despite their best intentions, many adults do not know how to *properly* protect child passengers.

If you have children, or ever need to drive with a child in your vehicle, be sure to read this section. It begins with important general guidelines, then presents special information for infants, small children, and larger children.

All Children Must Be Restrained

Each year, many children are injured or killed in vehicle crashes because they are either unrestrained or not properly restrained. In fact, traffic accidents are the number one cause of death of children age 12 and under.

To reduce the number of child deaths and injuries, every state, Canadian province and territory requires that infants and children be properly restrained when they ride in a vehicle.

Infants and small children must be restrained in an approved child seat that is properly secured to the vehicle (see pages 40 – 48).

⚠WARNING

Children who are unrestrained or improperly restrained can be seriously injured or killed in a crash.

Any child too small for a seat belt should be properly restrained in a child seat. A larger child should be properly restrained with a seat belt and use a booster seat if necessary.

Larger children must be restrained with a lap/shoulder belt and ride on a booster seat until the seat belt fits them properly (see pages 49 – 51).

All Children Should Sit in a Back Seat

According to statistics, children of all ages and sizes are safer when they are restrained in a back seat.

The National Highway Traffic Safety Administration and Transport Canada recommend that all children aged 12 and under be properly restrained in a back seat.

Some states have laws restricting where children may ride.

Children who ride in back are less likely to be injured by striking interior vehicle parts during a collision or hard braking. Also, children cannot be injured by an inflating front airbag when they ride in the back.

The Passenger's Front Airbag Can Pose Serious Risks

Front airbags have been designed to help protect adults in a moderate to severe frontal collision. To do this, the passenger's front airbag is quite large, and it can inflate with enough force to cause very serious injuries.

Even though your vehicle has an advanced front airbag system that automatically turns the passenger's front airbag off under certain circumstances (see page 32), please follow these guidelines:

Infants

Never put a rear-facing child seat in the front seat of a vehicle equipped with a passenger's front airbag. If the airbag inflates, it can hit the back of the child seat with enough force to kill or very seriously injure an infant.

Small Children

Placing a forward-facing child seat in the front seat of a vehicle equipped with a passenger's front airbag can be hazardous. If the vehicle seat is too far forward, or the child's head is thrown forward during a collision, an inflating front airbag can strike the child with enough force to kill or very seriously injure a small child.

Larger Children

Children who have outgrown child seats are also at risk of being injured or killed by an inflating passenger's front airbag. Whenever possible, larger children should sit in the back seat, on a booster seat if needed, and be properly restrained with a seat belt (see page 49 for important information about protecting larger children).

To remind you of the passenger's front airbag hazards, and that children must be properly restrained in a back seat, your vehicle has warning labels on the dashboard (U.S. models) and on the front visors. Please read and follow the instructions on these labels.

U.S. Models

SUN VISORS

DASHBOARD

Canadian Models

SUN VISORS

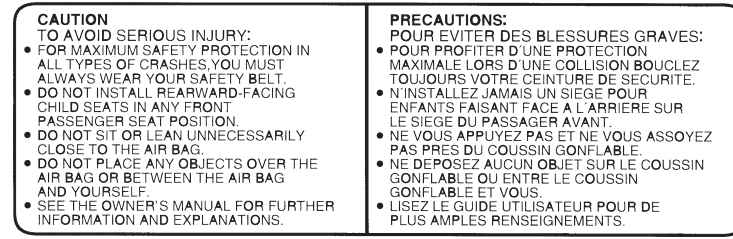

If You Must Drive with Several Children
Your vehicle has two back seats where children can be properly restrained. If you ever have to carry a group of children, and a child must ride in front:

- Place the largest child in the front seat, provided the child is large enough to wear the lap/shoulder belt properly (see page 49).
- Move the vehicle seat as far to the rear as possible (see page 83).
- Have the child sit upright and well back in the seat (see page 15).
- Make sure the seat belt is properly positioned and secured (see page 14).

If a Child Requires Close Attention
Many parents say they prefer to put an infant or a small child in the front passenger seat so they can watch the child, or because the child requires attention.

Placing a child in the front seat exposes the child to hazards in a frontal collision, and paying close attention to a child distracts the driver from the important tasks of driving, placing both of you at risk.

If a child requires physical attention or frequent visual contact, we strongly recommend that another adult ride with the child in the back seat. The back seat is far safer for a child than the front.

Additional Safety Precautions

- ***Never hold an infant or child on your lap.*** If you are not wearing a seat belt in a crash, you could be thrown forward and crush the child against the dashboard or a seat-back. If you are wearing a seat belt, the child can be torn from your arms and be seriously hurt or killed.
- ***Never put a seat belt over yourself and a child.*** During a crash, the belt could press deep into the child and cause serious or fatal injuries.
- ***Never let two children use the same seat belt.*** If they do, they could be very seriously injured in a crash.
- ***Make sure any unused seat belt that a child can reach is buckled, the lockable retractor is activated, and the belt is fully retracted and locked.*** If a child wraps a loose seat belt around their neck, they can be seriously or fatally injured. (See page 46 for how to activate and deactivate the lockable retractor.)
- ***Do not leave children alone in a vehicle.*** Leaving children without adult supervision is illegal in most states, Canadian provinces/ territories, and can be very hazardous.

  For example, infants and small children left in a vehicle on a hot day can die from heatstroke. A child left alone with the key in the ignition switch can accidentally set the vehicle in motion, possibly injuring themselves or others.
- ***Lock all doors, the tailgate and the hatch when your vehicle is not in use.*** Children who play in vehicles can accidentally get trapped inside. Teach your children not to play in or around vehicles.
- ***Keep vehicle keys and remote transmitters out of the reach of children.*** Even very young children learn how to unlock vehicle doors, turn on the ignition, and open the tailgate or hatch, which can lead to accidental injury or death.

Protecting Infants

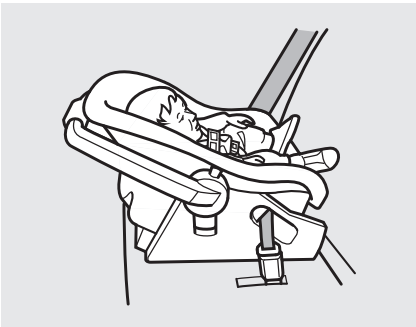

Child Seat Type
An infant must be properly restrained in a rear-facing, reclining child seat until the child reaches the seat maker's weight or height limit for the seat, and the child is at least one year old.

Only a rear-facing child seat provides proper support for a baby's head, neck, and back.

Two types of seats may be used: a seat designed exclusively for infants, or a convertible seat used in the rear-facing, reclining mode.

Do not put a rear-facing child seat in a forward-facing position. If placed facing forward, an infant could be very seriously injured during a frontal collision.

Rear-facing Child Seat Placement
A rear-facing child seat can be placed in any seating position in the back seat, but not in the front. ***Never put a rear-facing child seat in the front seat.***

If the passenger's front airbag inflates, it can hit the back of the child seat with enough force to kill or seriously injure an infant.

When properly installed, a rear-facing child seat may prevent the driver or a front passenger from moving their seat as far back as recommended, or from locking their seat-back in the desired position.

It could also interfere with proper operation of the passenger's advanced front airbag system.

In any of these situations, we strongly recommend that you install the child seat directly behind the front passenger's seat, move the seat as far forward as needed, and leave it unoccupied. Or, you may wish to get a smaller rear-facing child seat.

⚠WARNING

Placing a rear-facing child seat in the front seat can result in serious injury or death during a crash.

Always place a rear-facing child seat in the back seat, not the front.

Protecting Small Children

Child Seat Type
Many states, Canadian provinces and territories allow a child one year of age or older who also meets the minimum size and weight requirements to transition from a rear-facing child seat to a forward facing seat. Know the requirements where you are driving and follow the child seat instructions. Many experts recommend use of a rear-facing seat up to age two, if the child's height and weight are appropriate for a rear-facing seat.

Of the different seats available, we recommend those that have a five-point harness system as shown.

We also recommend that a small child use the child seat until the child reaches the weight or height limit for the seat.

Child Seat Placement
We strongly recommend placing a forward-facing child seat in a back seat, not the front.

Placing a forward-facing child seat in the front seat of a vehicle equipped with a passenger's airbag can be hazardous. If the vehicle seat is too far forward, or the child's head is thrown forward during a collision, an inflating airbag can strike the child with enough force to cause very serious or fatal injuries.

CONTINUED

Protecting Infants and Small Children, Selecting a Child Seat

Even with advanced front airbags that automatically turn the passenger's front airbag off (see page 32), a back seat is the safest place for a small child.

If it is necessary to put a forward-facing child seat in the front, move the vehicle seat as far to the rear as possible, and be sure the child seat is firmly secured to the vehicle and the child is properly strapped in the seat.

⚠ WARNING

Placing a forward-facing child seat in the front seat can result in serious injury or death if the front airbag inflates.

If you must place a forward-facing child seat in front, move the vehicle seat as far back as possible, and properly restrain the child.

Selecting a Child Seat

When buying a child seat, you need to choose either a conventional child seat, or one designed for use with the Lower Anchors and Tethers for CHildren (LATCH) system.

Conventional child seats must be secured to a vehicle with a seat belt, whereas LATCH-compatible seats are secured by attaching the seat to hardware built into the rear seats.

Since LATCH-compatible child seats are easier to install and reduce the possibility of improper installation, we recommend selecting this style.

In seating positions and vehicles not equipped with LATCH, a LATCH-compatible child seat can be installed using a seat belt.

Whatever type of seat you choose, to provide proper protection, a child seat should meet three requirements:

1. ***The child seat should meet Federal Motor Vehicle Safety Standard 213 or Canadian Motor Vehicle Safety Standard 213.*** Look for FMVSS 213 or CMVSS 213 on the box.
2. ***The child seat should be of the proper type and size to fit the child.*** Rear-facing for infants, forward-facing for small children.

3. ***The child seat should fit the vehicle seating position (or positions) where it will be used.***

Before purchasing a conventional child seat, or using a previously purchased one, we recommend that you test the seat in the specific vehicle seating position or positions where the seat will be used.

Installing a Child Seat

After selecting a proper child seat and a good place to install the seat, there are three main steps in installing the seat:

1. ***Properly secure the child seat to the vehicle.*** All child seats must be secured to the vehicle with the lap part of a lap/shoulder belt or with the LATCH (Lower Anchors and Tethers for CHildren) system. A child whose seat is not properly secured to the vehicle can be endangered in a crash.
2. ***Make sure the child seat is firmly secured.*** After installing a child seat, push and pull the seat forward and from side-to-side to verify that it is secure.

A child seat secured with a seat belt should be installed as firmly as possible. However, it does not need to be “rock solid.” Some side-to-side movement can be expected and should not reduce the child seat's effectiveness.

If the child seat is not secure, try installing it in a different seating position, or use a different style of child seat that can be firmly secured.

3. ***Secure the child in the child seat.*** Make sure the child is properly strapped in the child seat according to the child seat maker's instructions. A child who is not properly secured in a child seat can be seriously injured in a crash.

The following pages provide guidelines on how to properly install a child seat. A forward-facing child seat is used in all examples, but the instructions are the same for rear-facing child seats.

Installing a Child Seat

Installing a Child Seat with LATCH

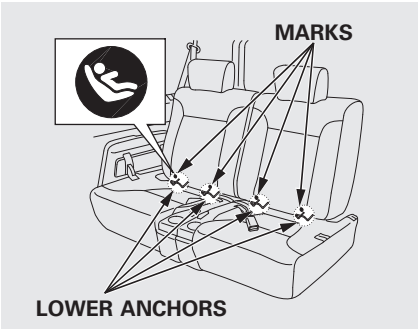

Your vehicle is equipped with LATCH (Lower Anchors and Tethers for CHildren) at the rear seats.
The lower anchors are located between the seat-back and seat bottom, and are to be used only with a child seat designed for use with LATCH.
The location of each lower anchor is indicated by a small button above the anchor point.

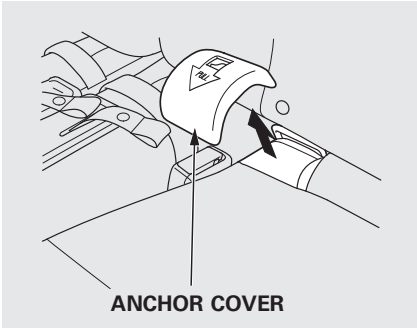

To install a LATCH-compatible child seat:

1. Remove both anchor covers by pulling forward.
2. Make sure there are no objects near the anchors that could prevent a secure connection between the child seat and the anchors.

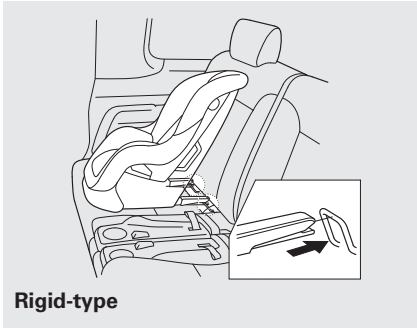

3. Place the child seat on the vehicle seat, then attach the seat to the lower anchors according to the child seat maker's instructions.

   Some LATCH-compatible seats have a rigid-type connector as shown above.

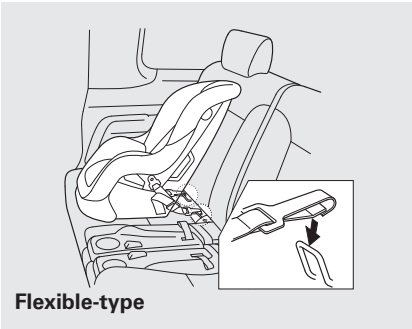

Other LATCH-compatible seats have a flexible-type connector as shown above.

4. Whatever type you have, follow the child seat maker's instructions for adjusting or tightening the fit.

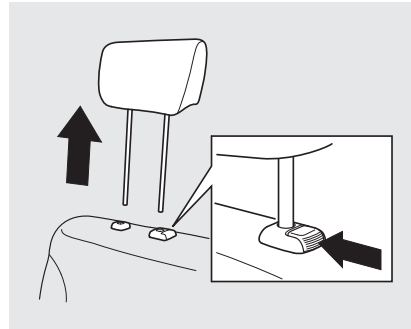

5. Remove the head restraint (see page 85). Make sure the removed head restraints are secured in the cargo area, and reinstalled when the child seat is removed.

6. Route the tether strap over the top of the seat-back, making sure the strap is not twisted.

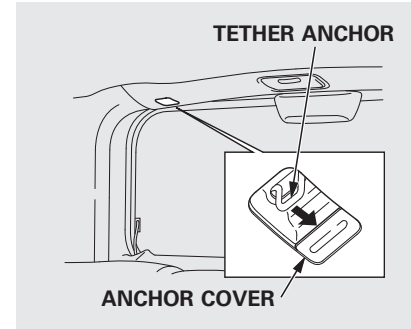

7. Slide the anchor cover open.

CONTINUED

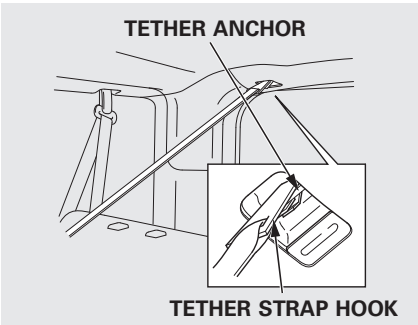

8. Attach the tether strap hook to the tether anchor, then tighten the strap as instructed by the child seat maker.
   If the tether strap is too long and cannot be tightened firmly, find a route where the strap can be tightened securely.
9. Push and pull the child seat forward and from side-to-side to verify that it is secure.

Installing a Child Seat with a Lap/ Shoulder Belt

When not using the LATCH system, all child seats must be secured to the vehicle with the lap part of a lap/ shoulder belt.

In addition, the lap/shoulder belts in all seating positions except the driver's have a lockable retractor that must be activated to secure a child seat.

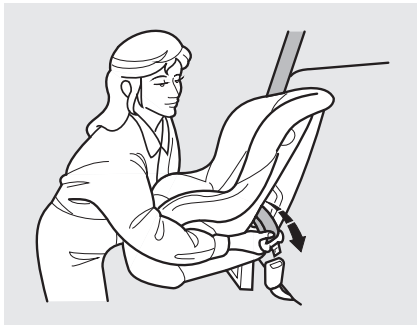

1. With the child seat in the desired seating position, route the belt through the child seat according to the seat maker's instructions, then insert the latch plate into the buckle and remove any slack from the lap portion of the belt.

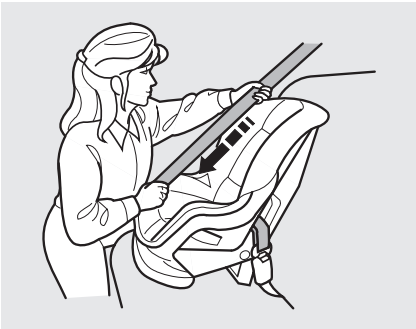

2. To activate the lockable retractor, slowly pull the shoulder part of the belt all the way out until it stops, then let the belt feed back into the retractor.
3. After the belt has retracted, tug on it. If the belt is locked, you will not be able to pull it out. If you can pull the belt out, it is not locked, and you will need to repeat these steps.

4. After confirming that the belt is locked, grab the shoulder part of the belt near the buckle, and pull up to remove any slack from the lap part of the belt. Remember, if the lap part of the belt is not tight, the child seat will not be secure.

   To remove slack, it may help to put weight on the child seat, or push on the back of the seat while pulling up on the belt.

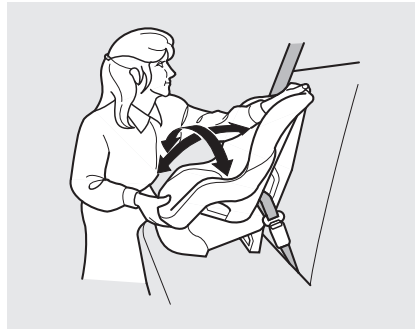

5. Push and pull the child seat forward and from side-to-side to verify that it is secure enough to stay upright during normal driving maneuvers. If the child seat is not secure, unlatch the belt, allow it to retract fully, then repeat these steps.

To deactivate the lockable retractor and remove a child seat, unlatch the buckle, unroute the seat belt, and let the belt fully retract.

Installing a Child Seat with a Tether

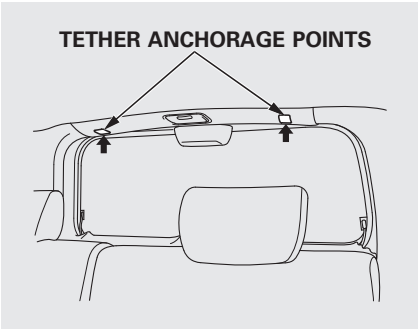

A child seat with a tether can be installed in either back seat, using one of the anchor points shown above.

Since a tether can provide additional security to the lap/shoulder belt installation, we recommend using a tether whenever one is required or available.

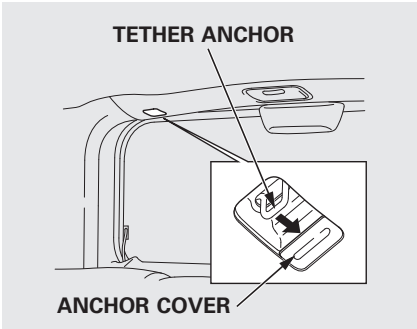

1. After securing the child seat in the desired position (see page 46), remove the head restraint (see page 85), then route the tether strap over the top of the seat-back.
2. Slide the anchor cover open as shown.

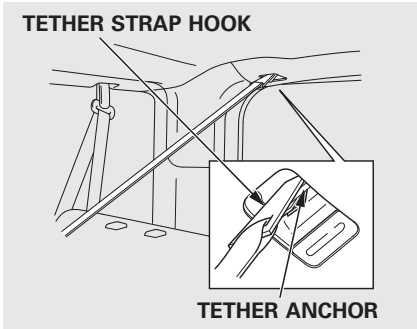

3. Attach the tether strap hook to the anchor, making sure the strap is not twisted.
4. Tighten the strap according to the seat maker's instructions. Make sure the removed head restraint is secured in the cargo area. Reinstall the head restraint in place when you remove the child seat.

When a child reaches the recommended weight or height limit for a forward-facing child seat, the child should sit in a back seat on a booster seat and wear the lap/shoulder belt.
The following pages give instructions on how to check proper seat belt fit, what kind of booster seat to use if one is needed, and important precautions for a child who must sit in front.

⚠ WARNING

Allowing a child age 12 or under to sit in front can result in injury or death if the passenger's front airbag inflates.

If a child must ride in front, move the vehicle seat as far back as possible, use a booster seat if needed, have the child sit up properly and wear the seat belt properly.

Checking Seat Belt Fit

To determine if a lap/shoulder belt properly fits a child, have the child put on the seat belt, then ask yourself:

1. Does the child sit all the way back against the seat?
2. Do the child's knees bend comfortably over the edge of the seat?
3. Does the shoulder belt cross between the child's neck and arm?
4. Is the lap part of the belt as low as possible, touching the child's thighs?
5. Will the child be able to stay seated like this for the whole trip?

If you answer yes to all these questions, the child is ready to wear the lap/shoulder belt correctly. If you answer no to any question, the child needs to ride on a booster seat.

Using a Booster Seat

A child who has outgrown a forward-facing child seat should ride in a back seat and use a booster seat until the lap/shoulder belt fits them properly without the booster. Some states, Canadian provinces and territories also require children to use a booster seat until they reach a given age or weight (e.g., 6 years or 60 lbs). Be sure to check current laws in the states, provinces or territories where you intend to drive.

Booster seats can be high-back or low-back. Whichever style you select, make sure the booster meets federal safety standards and that you follow the booster seat maker's instructions.

If a child who uses a booster seat must ride in front, move the vehicle seat as far back as possible and be sure the child is wearing the seat belt properly.

A child may continue using a booster seat until the tops of their ears are even with the top of the vehicle's or booster's seat-back. A child of this height should be tall enough to use the lap/shoulder belt without a booster seat.

When Can a Larger Child Sit in Front

The National Highway Traffic Safety Administration and Transport Canada recommend that all children aged 12 and under be properly restrained in a back seat.

If the passenger's front airbag inflates in a moderate to severe frontal collision, the airbag can cause serious injuries to a child who is unrestrained, improperly restrained, sitting too close to the airbag, or out of position.

A side airbag also poses risks. If any part of a larger child's body is in the path of a deploying side airbag, the child could receive possibly serious injuries.

Of course, children vary widely. And while age may be one indicator of when a child can safely ride in front, there are other important factors you should consider.

Maturity
To safely ride in front, a child must be able to follow the rules, including sitting properly, and wearing the seat belt properly throughout a ride.

Physical Size
Physically, a child must be large enough for the lap/shoulder belt to properly fit (see pages 14 and 49). If the seat belt does not fit properly, with or without the child sitting on a booster seat, the child should not sit in front.

If you decide that a child can safely ride up front, be sure to:

- Carefully read the owner's manual, and make sure you understand all seat belt instructions and all safety information.
- Move the vehicle seat to the rear-most position.
- Have the child sit up straight, back against the seat, and feet on or near the floor.
- Check that the child's seat belt is properly and securely positioned.
- Supervise the child. Even mature children sometimes need to be reminded to fasten the seat belts or sit properly.

Additional Safety Precautions

- ***Do not let a child wear a seat belt across the neck.*** This could result in serious neck injuries during a crash.
- ***Do not let a child put the shoulder part of a seat belt behind the back or under the arm.*** This could cause very serious injuries during a crash. It also increases the chance that the child will slide under the belt in a crash and be injured.
- ***Two children should never use the same seat belt.*** If they do, they could be very seriously injured in a crash.
- ***Do not put any accessories on a seat belt.*** Devices intended to improve a child's comfort or reposition the shoulder part of a seat belt can make the belt less effective and increase the chance of serious injury in a crash.

Carbon Monoxide Hazard

Your vehicle's exhaust contains carbon monoxide gas. Carbon monoxide should not enter the vehicle in normal driving if you maintain your vehicle properly and follow the information on this page.

Have the exhaust system inspected for leaks whenever:

- The vehicle is raised for an oil change.
- You notice a change in the sound of the exhaust.
- The vehicle was in a collision that may have damaged the underside.

⚠WARNING

Carbon monoxide gas is toxic. Breathing it can cause unconsciousness and even kill you.

Avoid any enclosed areas or activities that expose you to carbon monoxide.

High levels of carbon monoxide can collect rapidly in enclosed areas, such as a garage. Do not run the engine with the garage door closed. Even with the door open, run the engine only long enough to move the vehicle out of the garage.

With the tailgate or hatch open, air flow can pull exhaust gas into your vehicle's interior and create a hazardous condition. If you must drive with the tailgate or hatch open, open all the windows and set the heating and cooling system as shown below.

If you must sit in your parked vehicle with the engine running, even in an unconfined area, adjust the heating and cooling system as follows:

1. Select the fresh air mode.
2. Select the mode.
3. Turn the fan on high speed.
4. Set the temperature control to a comfortable setting.

These labels are in the locations shown. They warn you of potential hazards that could cause serious injury or death. Read these labels carefully.

If a label comes off or becomes hard to read (except for the U.S. dashboard label which may be removed by the owner), contact your dealer for a replacement.

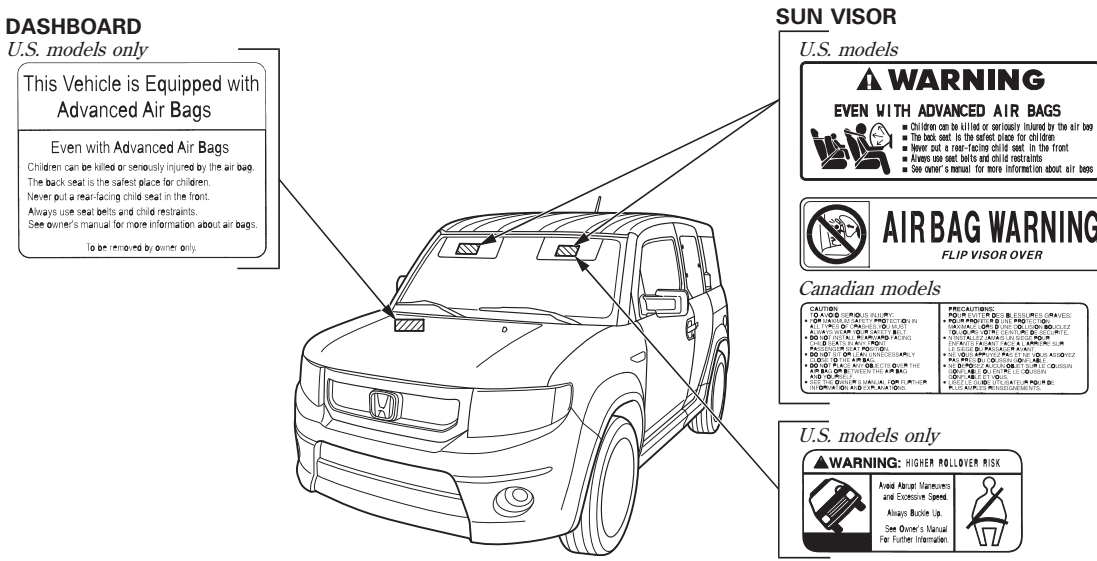

CONTINUED

Safety Labels

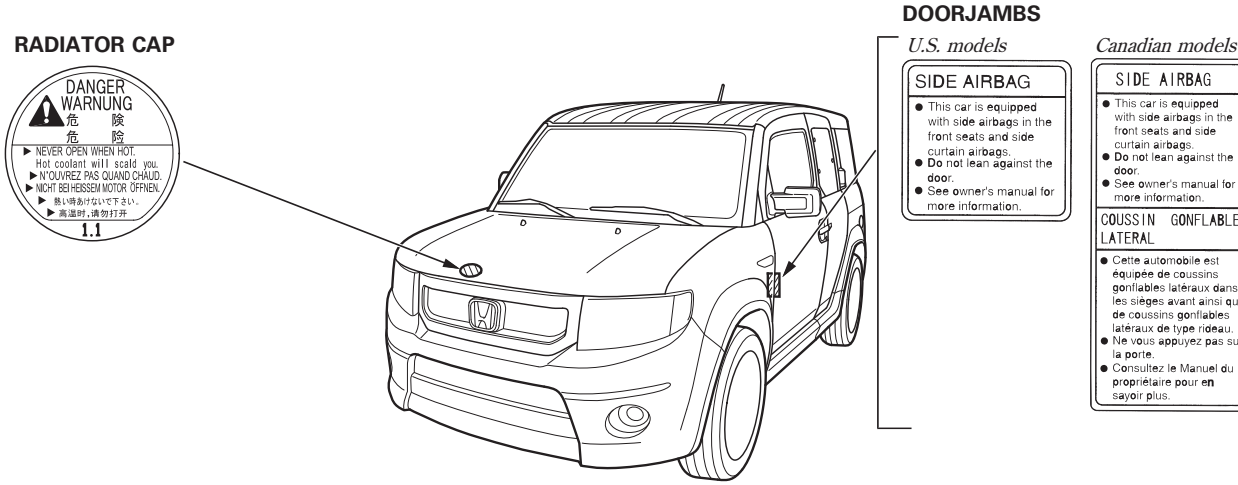

This section gives information about the controls and displays that contribute to the daily operation of your vehicle. All the essential controls are within easy reach.

Control Locations 56
Instrument Panel 57
Instrument Panel Indicators 58
Gauges 64
- Information Display 65
- Odometer 65
- Trip Meter 66
- Fuel Gauge 66
- Check Fuel Cap Message 66
- Temperature Gauge 67
- Maintenance Minder 67
- Outside Temperature Indicator 68

Controls Near the Steering Wheel 69
Windshield Wipers and Washers 70
Turn Signals and Headlights 71
Instrument Panel Brightness 72
Hazard Warning Button 73
Rear Window Defogger 74
Steering Wheel Adjustment 74
Keys and Locks 75
Immobilizer System 76
Remote Transmitter 77
Ignition Switch 79
Door Locks 80
- Power Door Locks 80
- Rear Doors 81
- Hatch 81
- Tailgate 82

Seats 83
- Seat Adjustments 83
- Driver's Seat Height Adjustment 84
- Front Seat Armrests 85
- Head Restraints 85
- Reclining the Front Seats 87
- Folding the Rear Seats 88
- Removing the Rear Seats 90

Power Windows 92
Mirrors 93
- Adjusting the Power Mirrors 93

Rear Windows 94
Parking Brake 94
Interior Lights 95
- Light Control Switch 95
- Individual Map Lights 95
- Courtesy Light 96
- Ceiling Light 96
- Cargo Area Light 96
- Ignition Switch Light 96

Interior Convenience Items 97
- Cooler Box 98
- Beverage Holders 99
- Accessory Power Sockets 100
- Glove Box 100
- Sun Visor 100
- Vanity Mirror 101
- Overhead Console 101

Control Locations

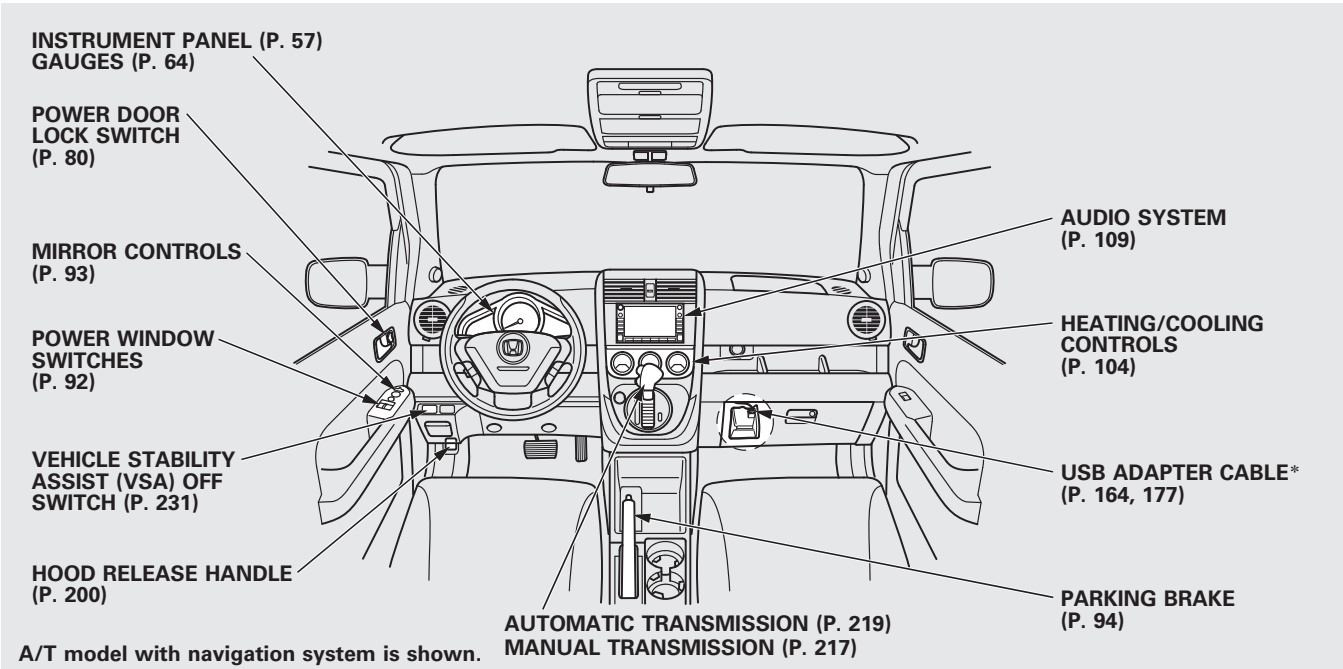

*: If equipped

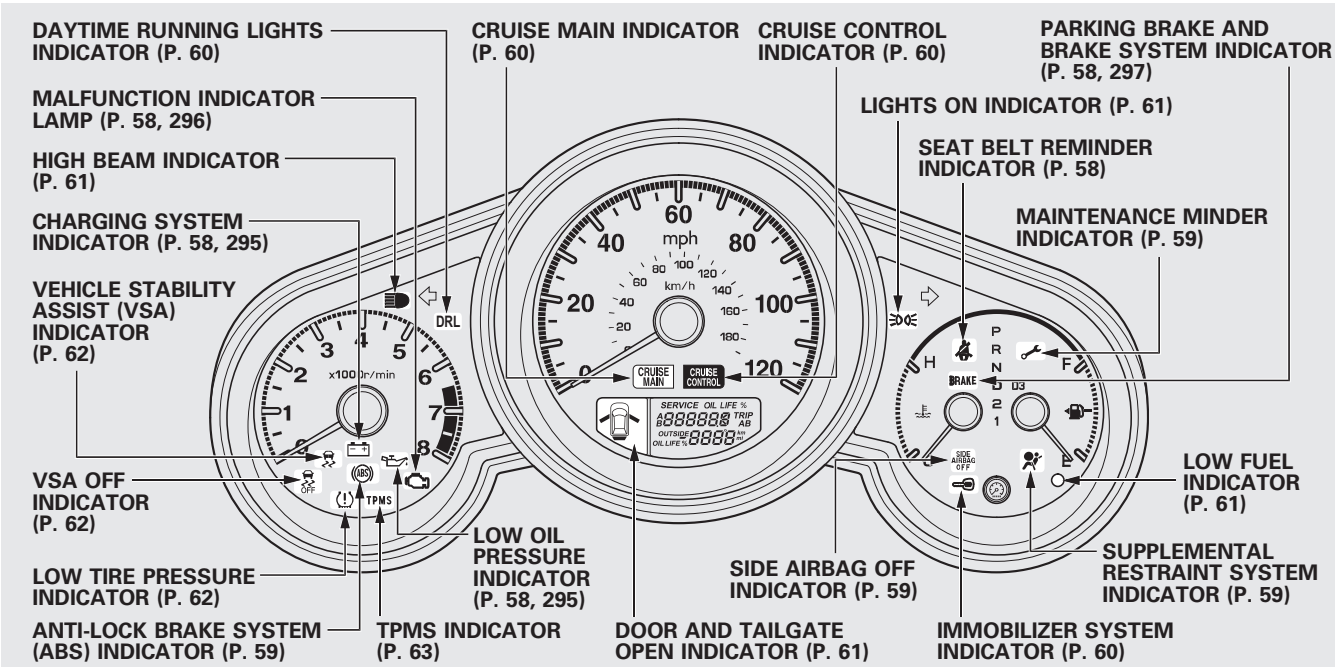

*: The U.S. instrument panel is shown. Differences for the Canadian models are noted in the text.

Instrument Panel Indicators

The instrument panel has many indicators that give you important information about your vehicle.

Malfunction Indicator Lamp

For more information, see page 296.

Low Oil Pressure Indicator

The engine can be severely damaged if this indicator flashes or stays on when the engine is running. For more information, see page 295.

Charging System Indicator

If this indicator comes on when the engine is running, the battery is not being charged. For more information, see page 295.

U.S.

Canada

Parking Brake and Brake System Indicator (Red)

This indicator has two functions:

1. It comes on when you turn the ignition switch to the ON (II) position. It is a reminder to check the parking brake. A beeper sounds if you drive with the parking brake not fully released. Driving with the parking brake not fully released can damage the brakes and tires.
2. If it remains on after you have fully released the parking brake while the engine is running, or if it comes on while driving, there could be a problem with the brake system. For more information, see page 297.

Seat Belt Reminder Indicator

This indicator comes on when you turn the ignition switch to the ON (II) position. It reminds you and your passengers to fasten your seat belts. A beeper also sounds if you have not fastened your seat belt.

If you turn the ignition switch to the ON (II) position before fastening your seat belt, the beeper sounds and the indicator flashes. If you do not fasten your seat belt before the beeper stops, the indicator stops flashing but remains on.

If your front passenger does not fasten their seat belt, the indicator comes on about 6 seconds after the ignition switch is turned to the ON (II) position.

If either of you do not fasten your seat belt while driving, the beeper will sound and the indicator will flash again at regular intervals. For more information, see page 18.

Supplemental Restraint System Indicator

This indicator comes on briefly when you turn the ignition switch to the ON (II) position. If it comes on at any other time, it indicates a potential problem with your front airbags. This indicator will also alert you to a potential problem with your side airbags, passenger's side airbag cutoff system, side curtain airbags, automatic seat belt tensioners, driver's seat position sensor, or the front passenger's weight sensors. For more information, see page 31.

U.S. Canada

SIDE AIRBAG OFF

Side Airbag Off Indicator

This indicator comes on briefly when you turn the ignition switch to the ON (II) position. If it comes on at any other time, it indicates that the passenger's side airbag has automatically shut off. For more information, see page 32.

Anti-lock Brake System (ABS) Indicator

This indicator normally comes on for a few seconds when you turn the ignition switch to the ON (II) position, and when the ignition switch is turned to the START (III) position. If it comes on at any other time, there is a problem with the ABS. If this happens, have your vehicle checked at a dealer. With this indicator on, your vehicle still has normal braking ability but no anti-lock function. For more information, see page 226.

Maintenance Minder Indicator

This indicator comes on for a few seconds when you turn the ignition switch to the ON (II) position. It reminds you that it is time to take your vehicle in for scheduled maintenance. The maintenance main items and sub items will be displayed in the information display. See page 243 for more information on the maintenance minder.

This indicator goes off when your dealer resets it after completing the required maintenance service.

CONTINUED

Immobilizer System Indicator

This indicator comes on for a few seconds when you turn the ignition switch to the ON (II) position. It will then go off if you have inserted a properly coded ignition key. If it is not a properly coded key, the indicator will blink, and the engine will not start (see page 76).

This indicator also blinks several times when you turn the ignition switch from the ON (II) position to the ACCESSORY (I) or LOCK (0) position.

Turn Signal and Hazard Warning Indicators

The left or right turn signal indicator blinks when you signal a lane change or turn. If the indicators do not blink or they blink rapidly, it usually means one of the turn signal bulbs is burned out (see page 263). Replace the bulb as soon as possible, since other drivers cannot see that you are signaling.

When you press the hazard warning button, both turn signal indicators and all turn signals on the outside of the vehicle flash.

Daytime Running Lights Indicator

If this indicator comes on when the ignition switch is turned to the ON (II) position and the parking brake is released, it means there is a problem with a circuit. Have your vehicle checked by your dealer.

Cruise Control Indicator

This indicator comes on when you set the cruise control. See page 193 for information on operating the cruise control.

Cruise Main Indicator

This indicator comes on when you turn on the cruise control system by pressing the CRUISE button on the steering wheel (see page 193).

Lights On Indicator

This indicator reminds you that the exterior lights are on. It comes on when the light switch is in either the or position. If you turn the ignition switch to the ACCESSORY (I) or LOCK (0) position without turning off the light switch, this indicator will stay on. A reminder chime will also sound when you open the driver's door.

High Beam Indicator

This indicator comes on with the high beam headlights. For more information, see page 71.

Washer Level Indicator

Canadian models only
This indicator comes on when the washer fluid level is low. Add washer fluid when you see this indicator come on (see page 255).

Low Fuel Indicator

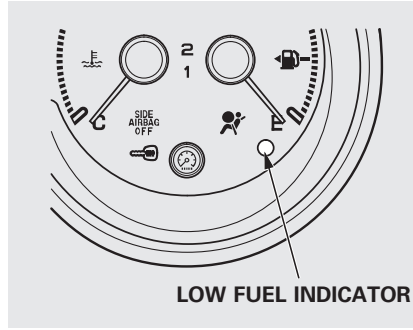

This indicator comes on as a reminder that you must refuel soon.

When the indicator comes on, there is about 2.8 U.S. gal (10.5 L) of fuel remaining in the tank before the needle reaches E. There is a small reserve of fuel remaining in the tank when the needle does reach E.

Door and Tailgate Open Indicator

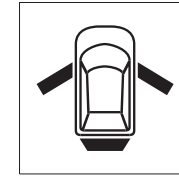

The appropriate indicator comes on in this display if the hatch, the tailgate, or any door is not closed tightly.

CONTINUED

Vehicle Stability Assist (VSA) System Indicator

This indicator normally comes on for a few seconds when you turn the ignition switch to the ON (II) position and when the ignition switch is turned to the START (III) position.

It flashes when VSA is active (see page 230).

If it comes on and stays on at any other time, or it does not come on when you turn the ignition switch to the ON (II) position, there is a problem with the VSA system. Take your vehicle to a dealer to have it checked. Without VSA, your vehicle still has normal driving ability, but will not have VSA traction and stability enhancement. See page 230 for more information on the VSA system.

VSA OFF Indicator

It comes on as a reminder that you have turned off the vehicle stability assist (VSA) system.

This indicator normally comes on for a few seconds when you turn the ignition switch to the ON (II) position and when the ignition switch is turned to the START (III) position. See page 230 for more information on the VSA system.

Low Tire Pressure Indicator

This indicator normally comes on for a few seconds when you turn the ignition switch to the ON (II) position.
If it comes on while driving, it indicates that one or more of your vehicle's tires are significantly low on pressure.

If this happens, pull to the side of the road when it is safe, check which tire has lost the pressure, and determine the cause. If it is because of a flat tire, replace the flat tire with the compact spare (see page 282), and have the flat tire repaired as soon as possible. If two or more tires are underinflated, call a professional towing service (see page 303). For more information, see page 227.

TPMS Tire Pressure Monitoring System (TPMS) Indicator

This indicator normally comes on for a few seconds when you turn the ignition switch to the ON (II) position.

If this indicator comes on and stays on at any other time, or if it does not come on when you turn the ignition switch to the ON (II) position, there is a problem with the TPMS; the system that monitors tire pressure. With this indicator on, the low tire pressure indicator will not come on when a tire loses pressure. Take the vehicle to your dealer to have the system checked.

Gauges

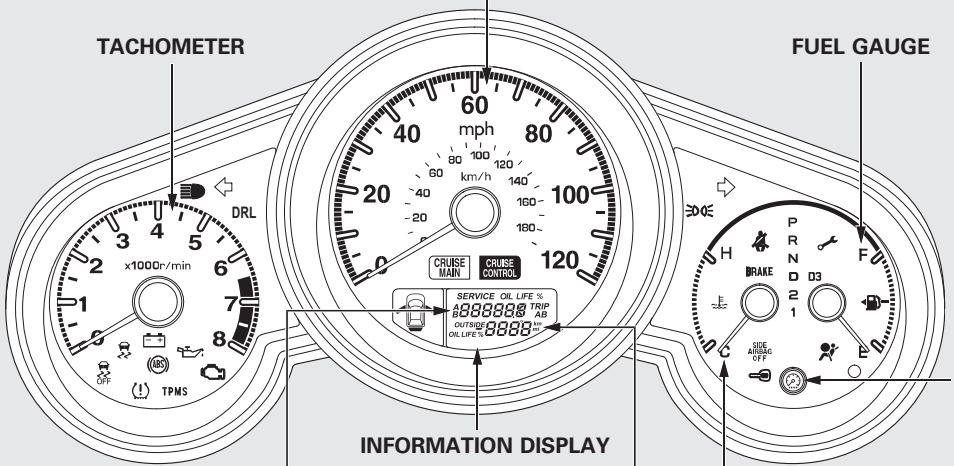

U.S. model is shown.

*: If equipped.

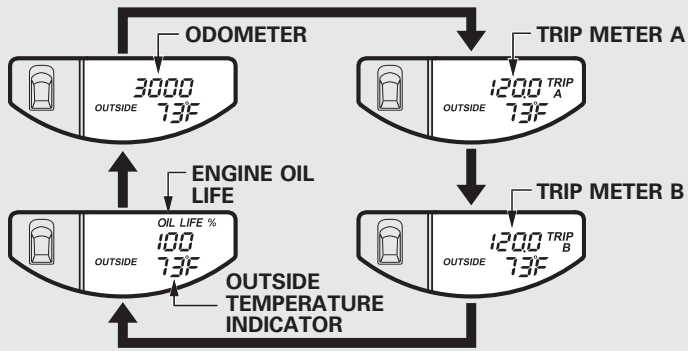

U.S. model with outside temperature indicator is shown.

Information Display
The information display shows the odometer, trip meter, engine oil life, outside temperature (if equipped), and maintenance item code(s).

To switch the display, press and release the select/reset knob repeatedly. When you turn the ignition switch to the ON (II) position, your last selection is displayed.

Odometer
The odometer shows the total distance your vehicle has been driven. It measures miles in U.S. models and kilometers in Canadian models. It is illegal under U.S. federal law and Canadian provincial and territorial regulations to disconnect, reset, or alter the odometer with the intent to change the number of miles or kilometers indicated.

Trip Meter
This shows the number of miles (U.S.) or kilometers (Canada) driven since you last reset it.

There are two trip meters: Trip A and Trip B. Switch between these displays by pressing the select/reset knob repeatedly.

Each trip meter works independently, so you can keep track of two different distances.

When you turn the ignition switch to the ON (II) position, the last selection is displayed.

To reset a trip meter, display it, and then press and hold the select/reset knob until the number resets to “0.0”.

Fuel Gauge
This shows how much fuel you have. It may show slightly more or less than the actual amount. The needle returns to the bottom after you turn off the ignition.

NOTICE

Avoid driving with an extremely low fuel level. Running out of fuel could cause the engine to misfire, damaging the catalytic converter.

Check Fuel Cap Message
Your vehicle's onboard diagnostic system will detect a loose or missing fuel fill cap as an evaporative system leak. The first time a leak is detected a “CHECK FUEL CAP” message appears on the information display.

Turn the engine off, and confirm the fuel fill cap is installed. If it is, loosen it, then retighten it until it clicks at least once. The message should go off after several days of normal driving once you tighten or replace the fuel fill cap. To scroll to another display, press the select/reset knob.

The “CHECK FUEL CAP” message will appear each time you restart the engine until the system turns the message off.

If the system still detects a leak in your vehicle's evaporative emissions system, the malfunction indicator lamp (MIL) comes on. If the fuel fill cap was not already tightened, turn the engine off, and check or retighten the fuel fill cap until it clicks at least once. The MIL should go off after several days of normal driving once the cap is tightened or replaced. If the MIL does not go off, have your vehicle inspected by a dealer. For more information, see page 296.

Temperature Gauge

This shows the temperature of the engine's coolant. During normal operation, the pointer should rise to about the middle of the gauge. In severe driving conditions, the pointer may rise to the upper zone. If it reaches the red (hot) mark, pull safely to the side of the road. Turn to page 293 for instructions and precautions on checking the engine's cooling system.

Maintenance Minder

The information display in the instrument panel shows you the engine oil life and maintenance service items when the ignition switch is in the ON (II) position. This information helps to keep you aware of the periodic maintenance your vehicle needs for continued trouble-free driving. Refer to page 243 for more information.

Outside Temperature Indicator
On EX and SC models
This indicator displays the outside temperature in Fahrenheit (U.S. models) or Celsius (Canadian models).

The temperature sensor is in the front bumper. The temperature reading can be affected by heat reflection from the road surface, engine heat, and the exhaust from surrounding traffic. This can cause an incorrect temperature reading when your vehicle speed is under 19 mph (30 km/h). When you start your trip, the sensor is not fully acclimatized, therefore it may take several minutes until the proper temperature is displayed.

In certain weather conditions, temperature readings near freezing (32°F, 0°C) could mean that ice is forming on the road surface.

If the outside temperature is incorrectly displayed, you can adjust it up to ±5°F in U.S. models (±3°C in Canadian models) warmer or cooler.

NOTE: The temperature must be stabilized before doing this procedure.

To adjust the outside temperature indicator, make sure the odometer is shown in the display, then press and hold the select/reset knob for 10 seconds. The following sequence will appear for 1 second each: 0, 1, 2, 3, 4, 5, −5, −4, −3, −2, −1, 0 (U.S.) or 0, 1, 2, 3, −3, −2, −1, 0 (Canada).

When the temperature reaches the desired value, release the select/reset knob. You should see the new outside temperature displayed.

Controls Near the Steering Wheel

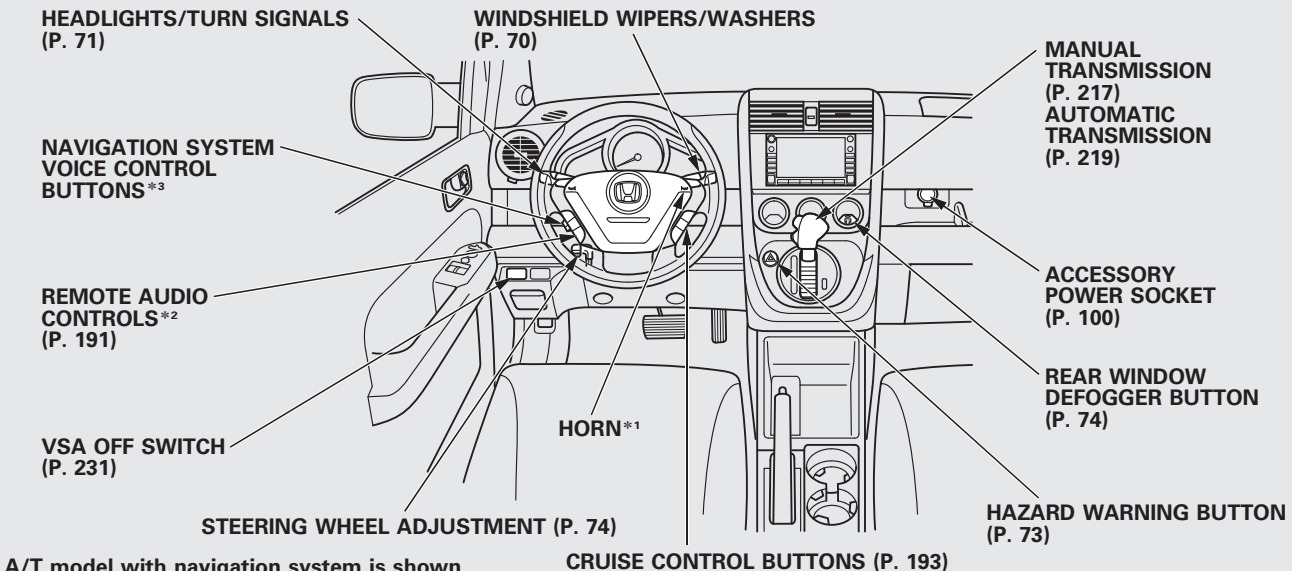

A/T model with navigation system is shown.

*1: To use the horn, press the center pad of the steering wheel.
*2: If equipped
*3: Only on vehicles equipped with navigation system. Refer to the navigation system manual.

Windshield Wipers and Washers

Windshield Wiper

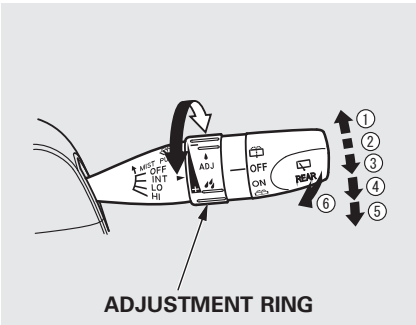

1. MIST
2. OFF
3. INT – Intermittent
3. LO – Low speed
5. HI – High speed
6. Windshield washers

Push the right lever up or down to select a position.

MIST – The wipers run at high speed until you release the lever.

OFF – The wipers are not activated.

INT – The length of the wipe interval is varied automatically according to vehicle's speed.

Vary the delay by turning the adjustment ring. If you turn it to the shortest delay (position), the wipers change to low speed operation when the vehicle speed exceeds 12 mph (20 km/h).

LO – The wipers run at low speed.

HI – The wipers run at high speed.

Windshield Washer – Pull the wiper control lever toward you, and hold it. The washers spray until you release the lever. The wipers run at low speed, then complete one more sweep after you release the lever.

Rear Window Wiper and Washer

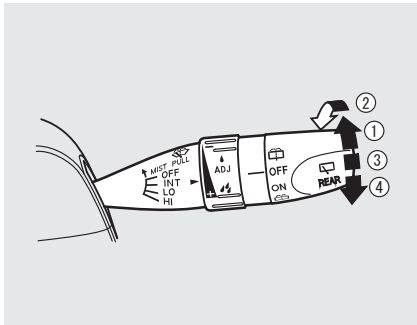

1. Rotate the switch clockwise to turn the rear window wiper ON.
2. Hold past ON to turn the window wiper on and the window washer on.
3. OFF
4. Rotate the switch counterclockwise and hold to spray the window washer and operate the wiper.

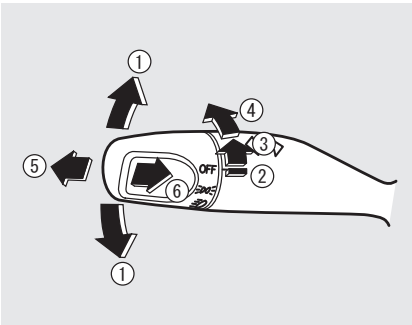

1. Turn signal
2. Off
3. Parking and instrument panel lights
4. Headlights on
5. High beams
6. Flash high beams

Turn Signal – Push down on the lever to signal a left turn and up to signal a right turn. To signal a lane change, push lightly on the lever, and hold it. The lever will return to center when you release it or complete a turn.

Headlights – Turning the switch to the " " position turns on the parking lights, taillights, instrument panel lights, side-marker lights, and rear license plate lights.

Turning the switch to the " " position turns on the headlights.

When the light switch is in the " " or " " position, the lights on indicator comes on as a reminder. This indicator stays on if you leave the light switch on and turn the ignition switch to the ACCESSORY (I) or the LOCK (0) position.

If you leave the lights on with the key removed from the ignition switch, you will hear a reminder chime when you open the driver's door.

CONTINUED

Turn Signals and Headlights, Instrument Panel Brightness

High Beams – Push the lever back until you hear a click to turn on the high beams. The blue high beam indicator will come on (see page 61). Pull the lever back again to low beams.

To flash the high beams, pull the lever back lightly, then release it. The high beams will stay on as long as you hold the lever back.

Daytime Running Lights
With the headlight switch off, the daytime running lights come on when you turn the ignition switch to the ON (II) position and release the parking brake. They remain on until you turn the ignition switch off, even if you set the parking brake.

When the headlights are on, the daytime running lights are off.

Instrument Panel Brightness

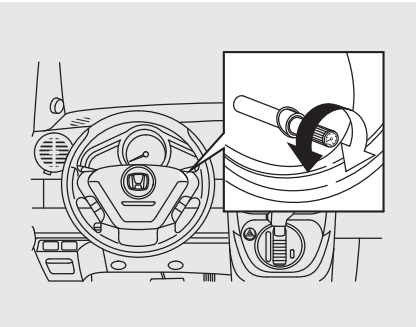

The select/reset knob on the instrument panel controls the brightness of the instrument panel lights. Turn the knob to adjust the brightness.

Separate adjustments can be made when the headlights are on and off.

Instrument Panel Brightness, Hazard Warning Button

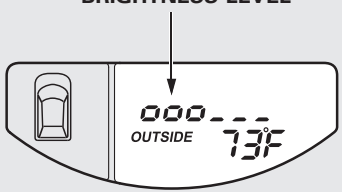

U.S. model is shown.

The level of brightness is shown on the information display while you adjust it. It goes out about 5 seconds after you finish adjusting.

To reduce glare at night, the instrument panel illumination dims when you turn the light switch to ⊱DOE or ≣D. Turning the select/reset knob to the right until you hear a beep will cancel the reduced brightness.

The instrument panel will illuminate with reduced brightness when you unlock and open the driver's door. The brightness will increase slightly when you insert the key in the ignition switch, then go to normal brightness when you turn the ignition switch to the ON (II) position.

If you do not insert the key in the ignition switch after opening the driver's door, the illumination turns off about 30 seconds after you close the door.

If you insert the key but do not turn the ignition switch to the ON (II) position, the illumination turns off in about 10 seconds.

Hazard Warning Button

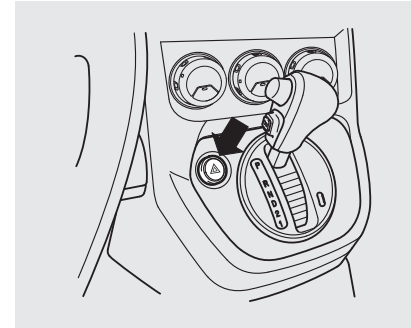

Push the button next to the shift lever to turn on the hazard warning lights (four-way flashers). This causes all four outside turn signals and both turn indicators in the instrument panel to flash. Use the hazard warning lights if you need to park in a dangerous area near heavy traffic, or if your vehicle is disabled.

Rear Window Defogger, Steering Wheel Adjustment

Rear Window Defogger

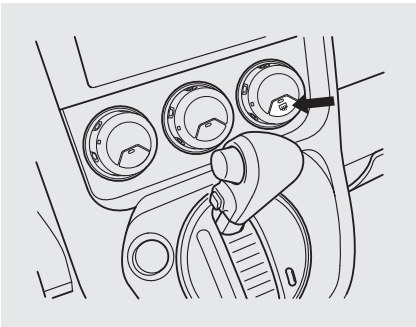

The rear window defogger will clear fog, frost, and thin ice from the window. Push the defogger button to turn it on and off. The indicator in the button comes on to show the defogger is on. If you do not turn it off, the defogger will shut itself off after about 15 minutes. It also shuts off when you turn off the ignition switch. You have to turn the defogger on again when you restart the vehicle.

Make sure the rear window is clear and you have good visibility before starting to drive.

The defogger wires on the inside of the rear window can be accidentally damaged. When cleaning the glass, always wipe side-to-side.

Steering Wheel Adjustment

Make any steering wheel adjustment before you start driving.

⚠ WARNING

Adjusting the steering wheel position while driving may cause you to lose control of the vehicle and be seriously injured in a crash.

Adjust the steering wheel only when the vehicle is stopped.

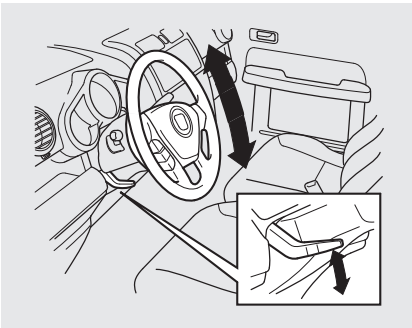

To adjust the steering wheel upward or downward:

1. Push the lever under the left side of the steering column all the way down.
2. Move the steering wheel up or down to the desired position. Make sure you can see the instrument panel gauges and the indicators.
3. Push the lever up to lock the steering wheel in that position.
4. Make sure you have securely locked the steering wheel in place by trying to move it up and down.

Keys and Locks

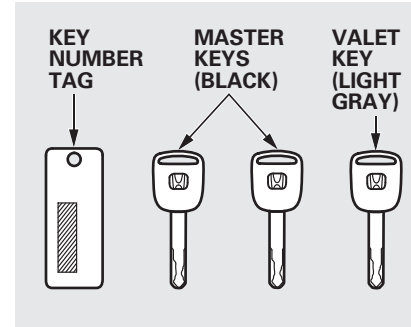

The master key fits all the locks on your vehicle. The valet key works only in the ignition and the door locks. You can keep the glove box and hatch locked when you leave your vehicle and the valet key at a parking facility.

CONTINUED

Keys and Locks, Immobilizer System

You should have received a key number tag with your set of keys. You will need this key number if you ever have to get a key replaced. Use only Honda-approved key blanks.

These keys contain electronic circuits that are activated by the immobilizer system. They will not work to start the engine if the circuits are damaged.

- Protect the keys from direct sunlight, high temperature, and high humidity.
- Do not drop the keys or set heavy objects on them.
- Keep the keys away from liquids. If they get wet, dry them immediately with a soft cloth.

The keys do not contain batteries. Do not try to take them apart.

See page 77 for an explanation of the remote transmitter's operation.

Immobilizer System

The immobilizer system protects your vehicle from theft. If an improperly coded key (or other device) is used, the engine's fuel system is disabled.

When you turn the ignition switch to the ON (II) position, the immobilizer system indicator should come on for a few seconds, then go off. If the indicator starts to blink, it means the system does not recognize the coding of the key. Turn the ignition switch to the LOCK (0) position, remove the key, reinsert it, and turn the ignition switch to the ON (II) position again.

The system may not recognize your key's coding if another immobilizer key or other metal object (i.e. key chain) is near the ignition switch when you insert the key.

If the system repeatedly does not recognize the coding of your key, contact your dealer.

Do not attempt to alter this system or add other devices to it. Electrical problems could result that may make your vehicle inoperable.

If you have lost your key and cannot start the engine, contact your dealer.

NOTICE

Always take the ignition key with you whenever you leave the vehicle alone.

As required by the FCC:
This device complies with Part 15 of the FCC rules. Operation is subject to the following two conditions: (1) This device may not cause harmful interference, and (2) this device must accept any interference received, including interference that may cause undesired operation.

Changes or modifications not expressly approved by the party responsible for compliance could void the user's authority to operate the equipment.

This device complies with Industry Canada Standard RSS-210.
Operation is subject to the following two conditions: (1) this device may not cause interference, and (2) this device must accept any interference that may cause undesired operation of the device.

Remote Transmitter

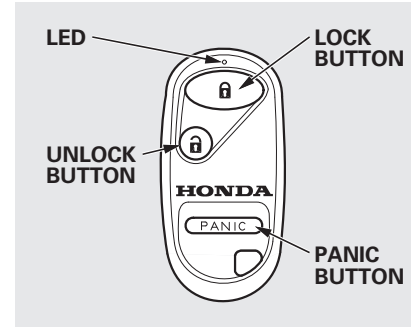

LOCK – Press this button once to lock both doors and hatch. Some exterior lights will flash. When you push LOCK twice within 5 seconds, you will hear a horn to verify that the doors are locked. You cannot lock it if any door is not fully closed or key is in the ignition switch.

CONTINUED

UNLOCK – Press this button once to unlock the driver's door. Push it twice to unlock the passenger's door and the hatch. Some exterior lights will flash twice each time you press the button. If you do not open either door or the hatch within 30 seconds, they will automatically relock.

PANIC – Press this button for about 1 second to attract attention; the horn will sound and the exterior lights will flash for about 30 seconds. To cancel panic mode, press any other button on the remote transmitter, or turn the ignition switch to the ON (II) position.

Remote Transmitter Care

- Avoid dropping or throwing the transmitter.
- Protect the transmitter from extreme temperature.
- Do not immerse the transmitter in any liquid.
- If you lose a transmitter, the replacement needs to be reprogrammed by your dealer.

Replacing the Transmitter Battery

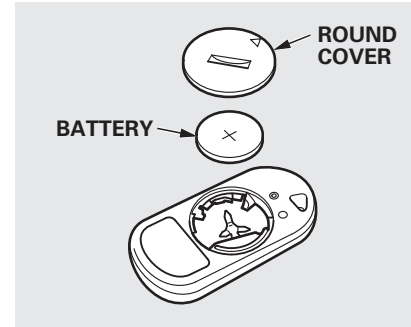

If it takes several pushes on the button to lock or unlock the doors and the hatch, replace the battery as soon as possible.

Battery type: CR2025

To replace the battery, remove the round cover on the back of the transmitter by turning it counterclockwise with a coin. Insert a new battery with the + side facing up, and reinstall the cushion ring. Align the ▽ mark on the cover with the ◎ mark on the transmitter. Set the cover in place and turn it clockwise.

As required by the FCC:
This device complies with Part 15 of the FCC rules. Operation is subject to the following two conditions: (1) This device may not cause harmful interference, and (2) this device must accept any interference received, including interference that may cause undesired operation.

Changes or modifications not expressly approved by the party responsible for compliance could void the user's authority to operate the equipment.

This device complies with Industry Canada Standard RSS-210.
Operation is subject to the following two conditions: (1) this device may not cause interference, and (2) this device must accept any interference that may cause undesired operation of the device.

Ignition Switch

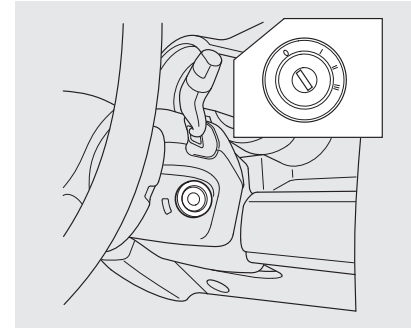

The ignition switch has four positions: LOCK (0), ACCESSORY (I), ON (II), and START (III).

LOCK (0) – You can insert or remove the key only in this position. To turn the key, push it in slightly. If your vehicle has an automatic transmission, the shift lever must also be in Park.

CONTINUED

If the front wheels are turned, the anti-theft lock may make it difficult to turn the key. Firmly turn the steering wheel to the left or right as you turn the key.

ACCESSORY (I) – You can operate the audio system and the accessory power sockets in this position.

ON (II) – This is the normal key position when driving. Several of the indicators on the instrument panel come on as a test when you turn the ignition switch from the ACCESSORY (I) to the ON (II) position.

START (III) – Use this position only to start the engine. The switch returns to the ON (II) position when you let go of the key.

You will hear a reminder beeper if you leave the key in the LOCK (0) or the ACCESSORY (I) position and open the driver's door. Remove the key to turn off the beeper.

If your vehicle has an automatic transmission, the shift lever must be in Park before you can remove the key from the ignition switch.

⚠WARNING

Removing the key from the ignition switch while driving locks the steering. This can cause you to lose control of the vehicle.

Remove the key from the ignition switch only when parked.

Power Door Locks

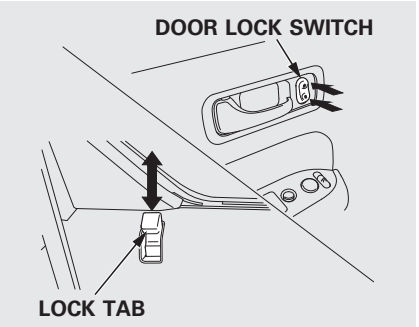

To lock all of the doors and hatch, press the door lock switch on the driver's door, or press the lock tab down on the driver's door, or use the key on the outside lock. Pressing up on the door lock switch will unlock all of the doors and the hatch.

The lock tab on the passenger's door locks and unlocks only that door. Pulling up on the driver's door lock tab only unlocks the driver's door.

To lock the driver's door, remove the key from the ignition switch, push the lock tab down or push the door lock switch down, then close the door.

To unlock the driver's door from the outside, turn the key and release it.

Lockout Prevention
With the driver's door open and the key in the ignition switch, the master door lock switch is disabled. It is not disabled if the driver's door is closed. If you try to lock the open driver's door with the key in the ignition switch by pushing in the lock tab, the tabs on all doors pop up when you close the door.

Rear Doors

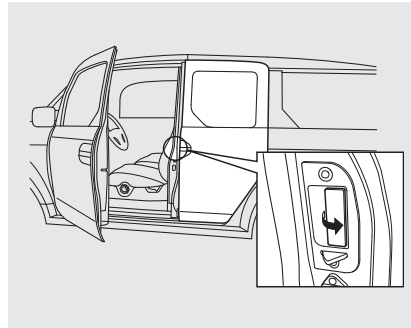

To open the rear door, pull the rear door handle located in the rear door edge. The rear door can be opened only when the front door is open.

To close the doors, close the rear door first, then the front door. The front door cannot be latched without first closing the rear door. Closing the rear door on the front door will damage both doors.

Hatch

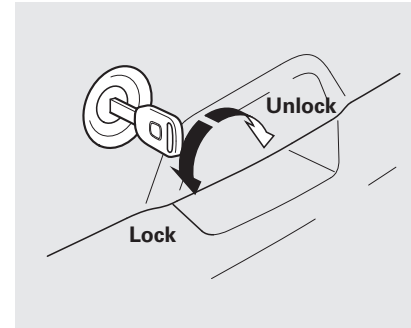

To lock or unlock the hatch.

- Use your master key to lock and unlock the hatch. Turn the key counterclockwise to lock the hatch, and clockwise to unlock it.

CONTINUED

- Lock the hatch by pushing down the lock tab on the driver's door (see page 80), or by using the master key in the driver's door lock.
- Lock or unlock the hatch with the master door lock switch.

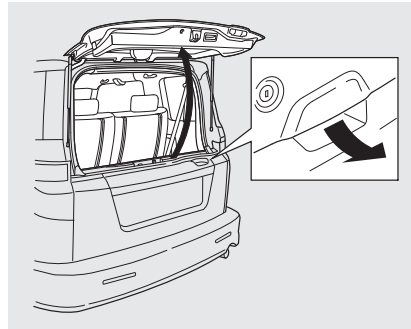

With the hatch unlocked, open it by pulling the handle and lifting up. To close the hatch, lower it, then press down on the back edge.

When both the hatch and tailgate are open, the hatch cannot be latched without first closing the tailgate.

Tailgate

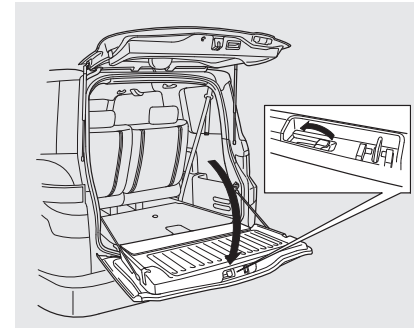

You can open the tailgate only when the hatch is open. To open the tailgate, slide the lock lever to the left and swing down the tailgate. To close the tailgate, lift it up and push it firmly until it latches.

Before closing the tailgate, make sure the hatch is raised. Closing the tailgate on the lowered hatch can damage the hatch and the tailgate.

See page 210 for information on cargo loading. Keep the tailgate and the hatch closed at all times while driving to avoid damaging them, and to prevent exhaust gas from getting into the interior. See **Carbon Monoxide Hazard** on page 52.

Seat Adjustments

See pages 11 – 13 for important safety information and warnings about how to properly position seats and seat-backs.

Make all seat adjustments before you start driving.

Front Seat

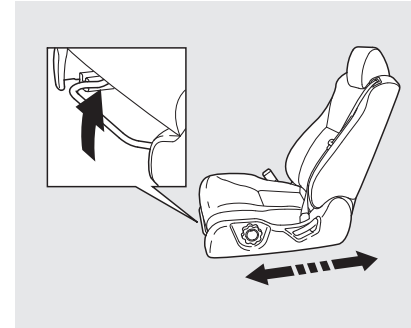

To adjust the seat forward and backward, pull up on the bar under the seat cushion's front edge. Try to move the seat to make sure it is locked in position.

CONTINUED

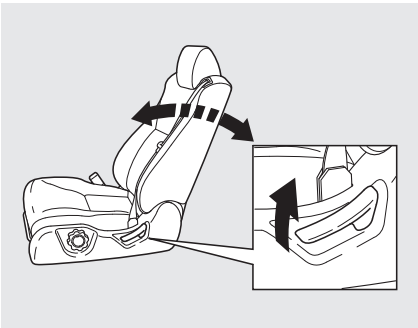

To change the seat-back angle of the front seat, pull up on the lever on the outside of the seat bottom. Adjust the seat-back and make sure it locks into position.

Rear Seat

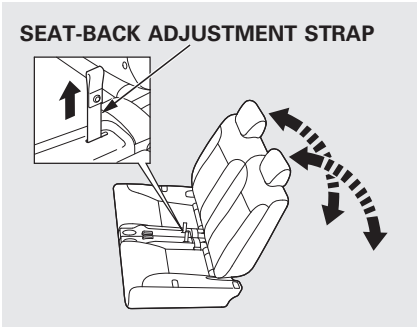

To change the angle of the rear seat-back, pull the strap at the inside edge of the seat cushion, make sure the seat-back locks into position.

Driver's Seat Height Adjustment

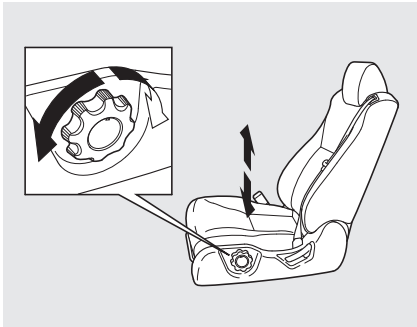

To adjust the height of the driver's seat, turn the dial on the outside of the seat bottom.

Front Seat Armrests

On EX model

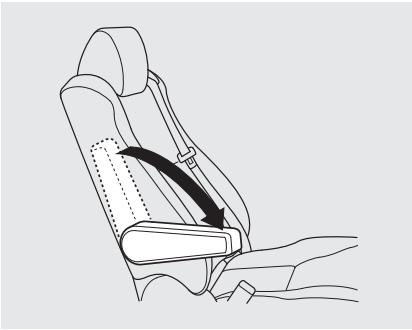

Each front seat has an armrest on the side of the seat-back. To use it, pivot it down.

Head Restraints

See page 13 for important safety information and a warning about improperly positioning head restraints.

Your vehicle is equipped with head restraints in all seating positions to help protect you and your passengers from whiplash and other injuries.

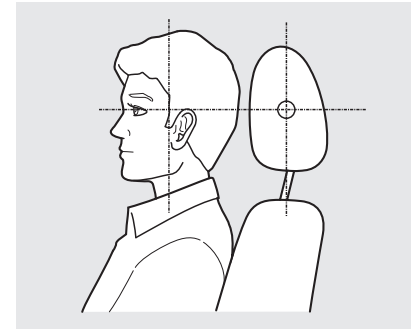

They are most effective when you adjust them so the center of the back of the occupant's head rests against the center of the restraint.

CONTINUED

Adjusting the Head Restraint

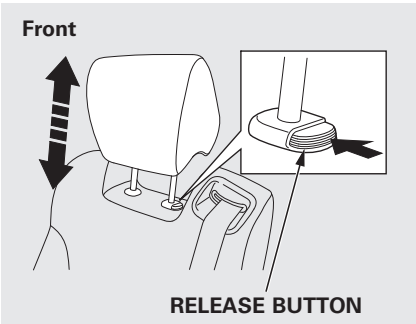

The head restraints in the front and rear seating positions adjust for height. You need both hands to adjust the restraint. To raise it, pull upward. To lower the restraint, push the release button sideways and push the restraint down.

Removing the Head Restraint

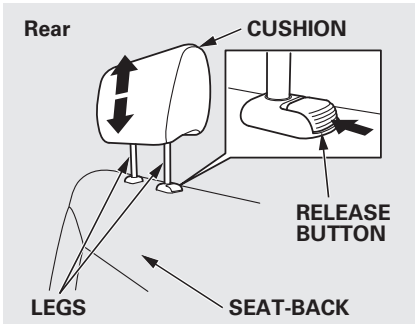

To remove a head restraint for cleaning or repair, pull it up as far as it will go. Push the release button, then pull the restraint out of the seat-back.

⚠ WARNING

Failure to reinstall the head restraints can result in severe injury during a crash.

Always replace the head restraints before driving.

When reinstalling a head restraint, put the legs back in place. Then adjust it to the appropriate height while pressing the release button.

Make sure the head restraint locks in position when you reinstall it.

Reclining the Front Seats

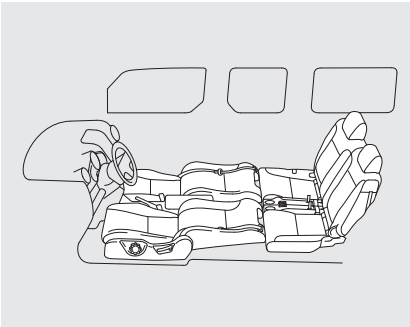

You can recline the seat-backs on the front seats so they are level with the rear seat cushions, making a large cushioned area. To do this:

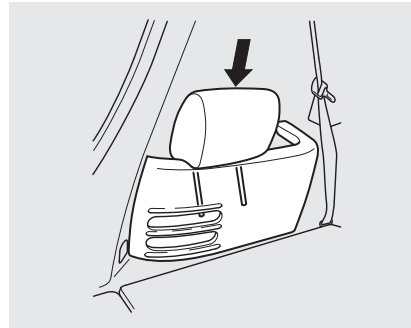

1. Remove the head restraints from the front seats (see page 85), and store them in the side pockets of the cargo area.
2. Adjust the front seats forward as far as possible. Pull up the seat-back angle adjustment lever and pivot the seat-back backward until it is level with the rear seat cushion.
3. Move the front seat backward until it touches the rear seat.
4. Adjust the rear seat-back to the desired position.

Reverse this procedure to return the front and rear seats to the upright position. Make sure you install the head restraints and the seats are locked securely before driving.

When you return the seat-back to its upright position, hold the seat-back to keep it from going up too quickly.

Folding the Rear Seats

To create more cargo space, you can fold up each rear seat to each side wall separately.

1. Lower the head restraint to its lowest position.

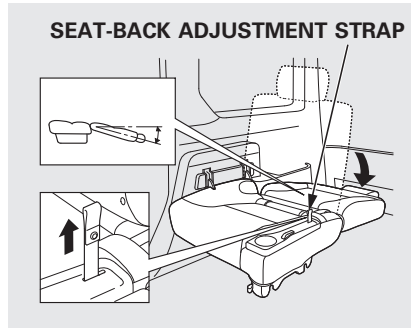

2. Pull the seat-back adjustment strap at the inside edge of the seat cushion and push the seat-back backward as far as it will go.

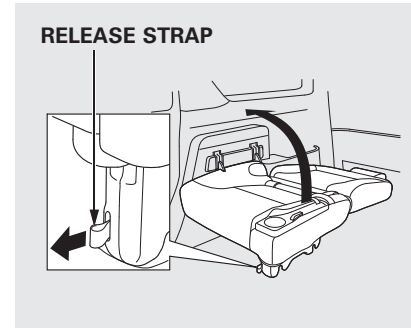

3. Pull the release strap on the seat support, and pivot the seat toward the vehicle's side wall.

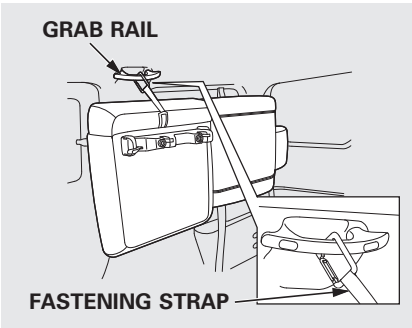

4. A fastening strap is attached to the inside of the seat cushion. While pushing the seat up and toward the side wall, hook the fastening strap to the grab rail.

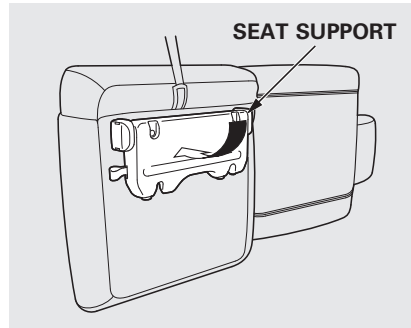

5. Fold down the seat support.

Reverse this procedure to return the rear seat to the upright position. When not in use, store the fastening strap hook in the fabric pocket on the bottom of the seat cushion. Make sure the seat is locked securely.

Removing the Rear Seats

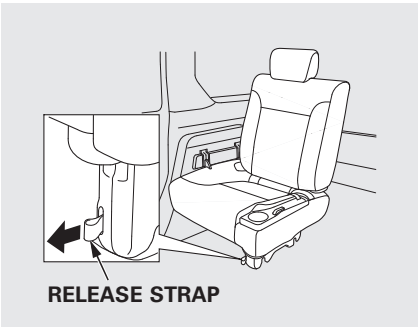

Both seats can be removed to give more cargo capacity. To remove a seat:

1. Pull the release strap on the seat support to unlock the seat support.

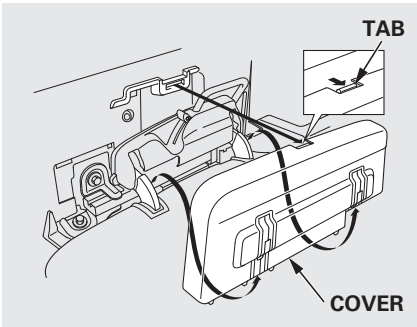

2. Remove the cover between the seat cushion and the side wall by pulling the tab and pulling the cover straight up.

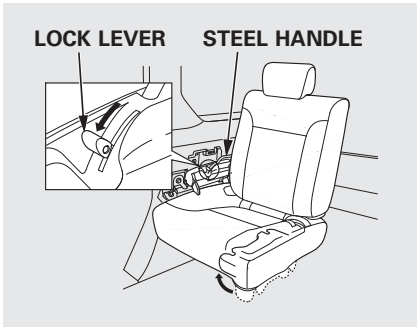

3. Push the lock lever forward to unlock the seat and fold down the seat support.

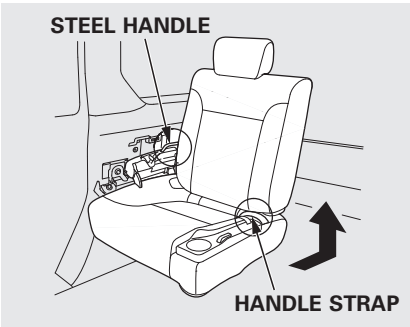

4. Hold the steel handle next to the lock lever and the handle strap at the outside edge of the seat cushion, and remove the entire seat by pulling it up and backward.

Reverse this procedure to reinstall the seat. Make sure the seats are securely locked in place before driving.

Always remove an unsecured seat from the vehicle before driving. A seat that is not locked in place could be thrown about and cause injury in a sudden stop or crash.

Power Windows

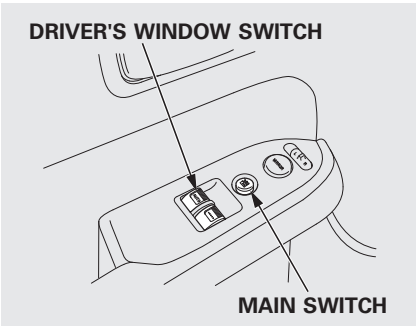

Turn the ignition switch to the ON (II) position to raise or lower either window. To open a window, push the switch down and hold it. Release the switch when you want the window to stop. Pull back on the switch and hold it to close the window.

⚠WARNING

Closing a power window on someone's hands or fingers can cause serious injury.

Make sure your passengers are away from the window before closing them.

AUTO – To open/close the driver's window, push the window switch firmly down or up to the second detent, and release it. The window will automatically go up or down all the way. To stop the window, pull/push on the window switch briefly.

If the MAIN switch is OFF, the passenger's window cannot be raised or lowered. Keep the MAIN switch off when you have children in the vehicle so they do not injure themselves by operating the passenger's window unintentionally.

AUTO REVERSE – If the driver's window senses any obstacle while it is closing automatically, it will reverse direction, and then stop. To close the window, remove the obstacle, then use the window switch again.
If your vehicle's battery is disconnected or goes dead, or the driver's window fuse is removed, the AUTO function may be disabled. If this happens, the power window system will need to be reset after reconnecting the battery or installing the fuse.

1. Start the engine. Push down and hold the driver's window switch until the window is fully open.
2. Pull and hold the driver's window switch to close the window completely, then hold the switch for about 2 seconds.

If the power windows do not operate properly after resetting, have your vehicle checked by your dealer.

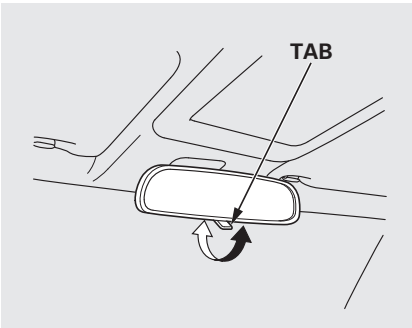

Keep the inside and outside mirrors clean and adjusted for best visibility. Be sure to adjust the mirrors before you start driving.

The inside mirror has day and night positions. The night position reduces glare from headlights behind you. Flip the tab on the bottom edge of the mirror to select the day or night position.

Adjusting the Power Mirrors

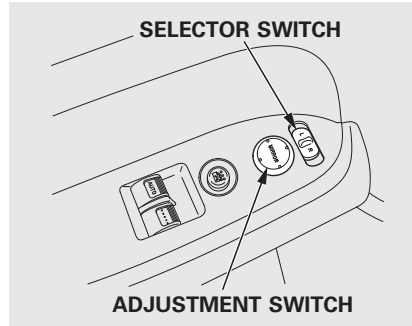

1. Turn the ignition switch to the ON (II) position.
2. Move the selector switch to L (driver's side) or R (passenger's side).
3. Push the appropriate edge of the adjustment switch to move the mirror right, left, up, or down.
4. When you finish, move the selector switch to the center (off) position. This turns the adjustment switch off to keep your settings.

Rear Windows, Parking Brake

Rear Windows

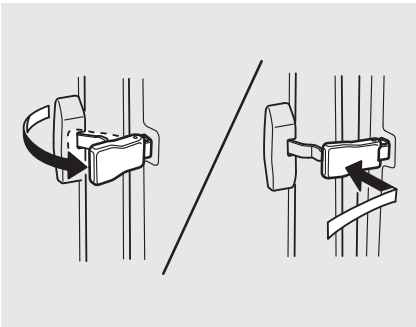

To open a rear window, pull the lever towards you, then push it out until it locks. To close the rear window pull the lever towards you, then push it back. Make sure the window is fully closed and locked.

Parking Brake

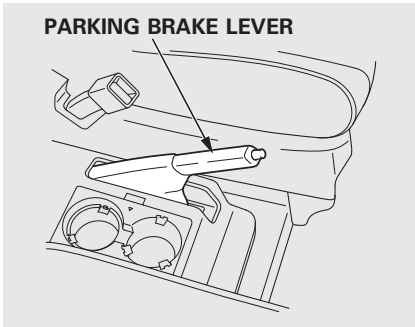

To apply the parking brake, pull the lever up fully. To release it, pull up slightly, push the button, and lower the lever. The parking brake indicator on the instrument panel should go out when the parking brake is fully released (see page 58).

NOTICE

Driving the vehicle with the parking brake applied can damage the rear brakes and axles. A beeper will sound if the vehicle is driven with the parking brake on.

Light Control Switch

On EX and SC models

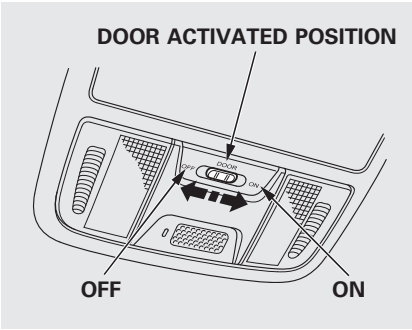

The light control switch has three positions: OFF, Door Activated, and ON.

When the switch is in the OFF position:

- The individual map lights can be turned on and off by pressing the lenses.
- The ceiling light cannot be turned on.

When the switch is in the door activated position:

- The individual map lights come on when any door is opened, or when the remote transmitter is used to unlock the doors (see page 77). When the doors are closed, each light can be turned on and off by pushing the lens.

After all doors are closed tightly, the lights dim slightly, then fade out in about 30 seconds.

With any door left open, the lights stay on about 3 minutes, then go out.

The lights also come on when the key is removed from the ignition switch.

When the light control switch is in the ON position:

- All the individual map lights and ceiling light come on and stay on as long as the switch remains in the ON position.

Individual Map Lights

On EX and SC models

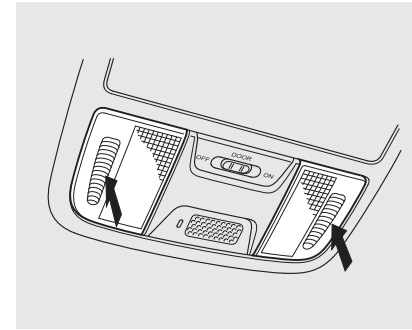

Turn on the individual map lights by pushing the lens. Push the lens again to turn it off.

Interior Lights

Courtesy Light

On vehicles with navigation system

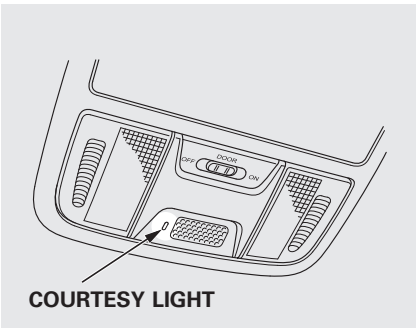

The courtesy light between the map lights comes on when you turn the parking lights on. To adjust its brightness, turn the select/reset knob on the instrument panel (see page 72).

Ceiling Light

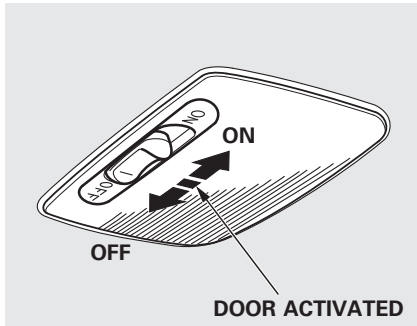

The ceiling light has a three-position switch: ON, Door Activated, and OFF. In the Door Activated (center) position, the light comes on when you:

- Open any door.
- Remove the key from the ignition. If you do not open a door, the light fades out in about 30 seconds.
- Unlock the doors with the key or remote transmitter.

Cargo Area Light

The cargo area light has a three-position switch. In the center position, the light comes on when you open the hatch.

Ignition Switch Light

The ignition switch light comes on when you unlock the driver's door, and fades out about 30 seconds after you close the door.

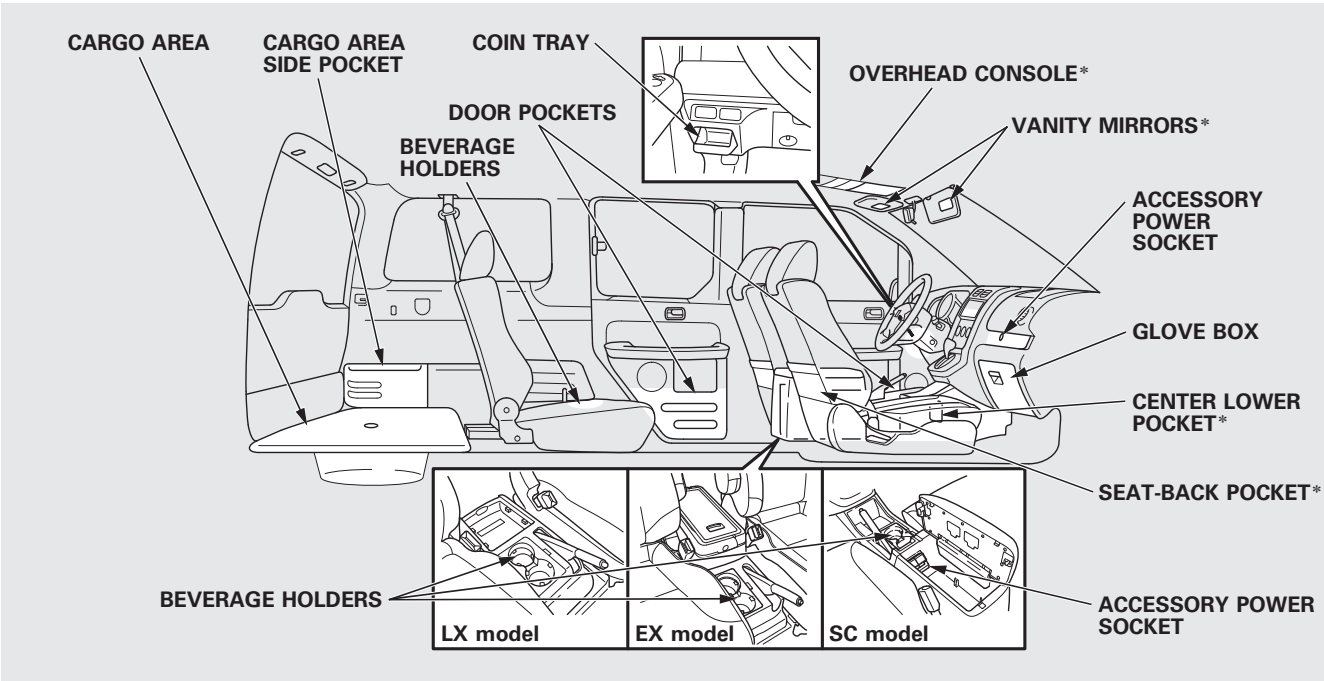
CARGO AREA
CARGO AREA SIDE POCKET
COIN TRAY
DOOR POCKETS
BEVERAGE HOLDERS
OVERHEAD CONSOLE*
VANITY MIRRORS*
ACCESSORY POWER SOCKET
GLOVE BOX
CENTER LOWER POCKET*
SEAT-BACK POCKET*
BEVERAGE HOLDERS
ACCESSORY POWER SOCKET
LX model
EX model
SC model

*: If equipped.

Cooler Box
On EX model

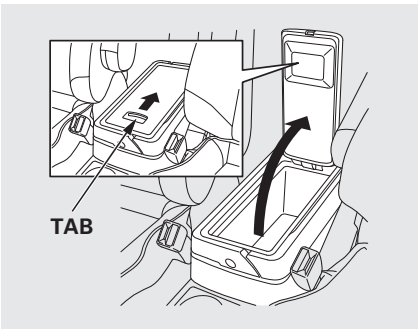

There is a cooler box between the driver's and passenger's seats.

To open the cooler box, slide the tab backward, and pull up the lid.

The lid has a breakaway feature. If the lid is rotated back too far it will break away from the box without damage.

To reinstall the lid, vertically set the rear lid hinge to the pins on the box and push down. The lid must be vertical as shown in the illustration.

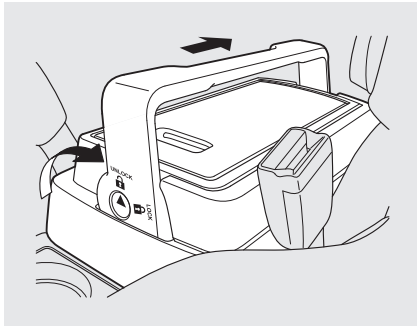

To remove the cooler box, rotate the handle up to the unlocked position.

Slide the console towards the rear of the vehicle then lift the console.

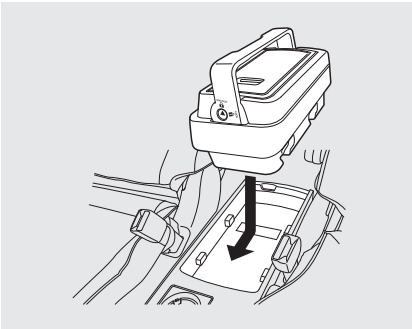

To reinstall the cooler box, set the cooler box into the floor base, then slide the cooler box forward.

Rotate the handle down to the locked position.

Make sure the cooler box is securely locked in place. A cooler box that is not locked in place could become a projectile and cause injury in a sudden stop or crash.

If you take the cooler box out, put it in a safe place outside the vehicle.

NOTE: The cooler box must be locked to floor base while driving.

Beverage Holders

Be careful when you are using the beverage holders. A spilled liquid that is very hot can scald you or your passengers. Spilled liquids can also damage the upholstery, and electrical components in the interior.

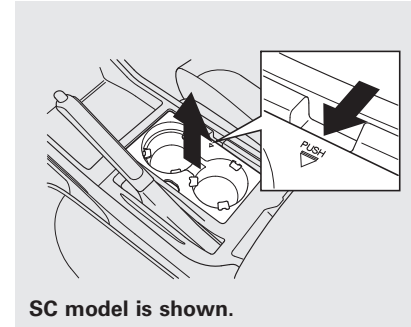

SC model is shown.

The front beverage holder is removable. To remove it, push the tab and pull it up.

Accessory Power Sockets

Your vehicle has one, two, or three accessory power sockets, depending on the model. All models have a front accessory power socket on the dashboard above the glove box.

EX and SC models have an accessory power socket in the cargo area on the passenger's side.

The SC model has one additional socket in the center console.

These sockets are intended to supply power for 12 volt DC accessories that are rated 120 watts or less (10 amps). None of the sockets will power an automotive type cigarette lighter element. When more than one socket is being used, the combined power rating of the accessories should be 120 watts or less (10 amps).

Glove Box

Open the glove box by pulling the bottom of the handle. Close it with a firm push. Lock or unlock the glove box with the master key.

⚠ WARNING

An open glove box can cause serious injury to your passenger in a crash, even if the passenger is wearing the seat belt.

Always keep the glove box closed while driving.

Sun Visor

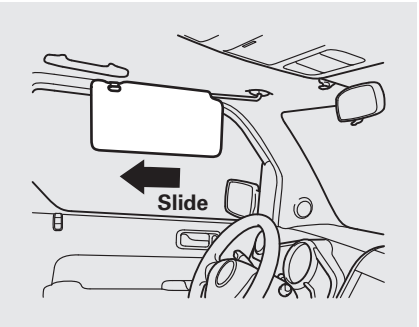

To use the sun visor, pull it down. When using the sun visor for the side window, remove the support rod from the clip, and swing it out.

In this position, the sun visor can be adjusted by moving it on its slider. Do not use the extended sun visor over the inside mirror.

Make sure you put the sun visor back in place when you are getting into or out of the vehicle.

Vanity Mirror

On EX and SC models

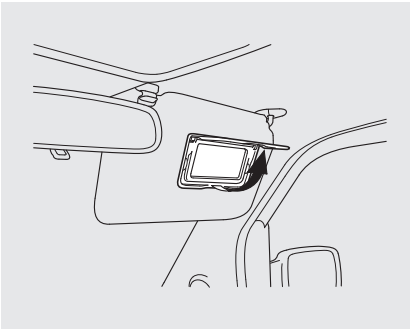

To use the vanity mirror on the back of the sun visor, pull up the cover.

Overhead Console

On EX and SC models

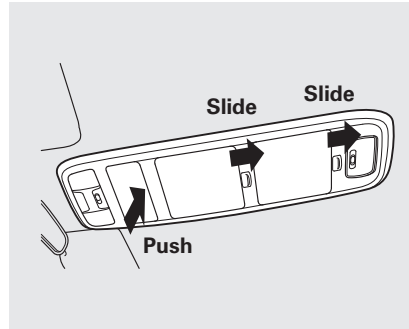

To open the overhead console, push on the rear edge or slide the tab as shown in the illustration. It will unlatch and swing down. To close it, push it until it latches. Make sure the holder is closed while you are driving.

You may also store small items in this holder. Make sure they are small enough to let the holder close and latch, and that they are not heavy enough to cause the holder to pop open while driving.

The heating and air conditioning system in your vehicle provides a comfortable driving environment in all weather conditions.

The standard audio system has many features. This section describes those features and how to use them. (If you have an optional audio system, refer to the operating instructions that came with it.)

On EX and SC models
Your vehicle has an anti-theft audio system that requires a code number to enable it.

Vents, Heating, and A/C 104
Air Flow Controls..... 105
Ventilation 106
Using the Heater 106
Using the A/C 106
Dehumidify the Interior 107
To Defog and Defrost 107
To Remove Exterior Frost or Ice From the Windows 108
To Turn Everything Off..... 108
Audio System 109
Playing the FM/AM Radio (Models without navigation system)..... 110
Playing the XM® Radio (Models without navigation system) 113
Playing a Disc (Models without navigation system)..... 119
Disc Player Error Messages (Models without navigation system)..... 125
Disc Changer Error Messages (Models without navigation system)..... 126
Playing the FM/AM Radio (Models with navigation system)..... 127
Playing the XM® Radio (Models with navigation system) 132
Playing a Disc (Models with navigation system)..... 140
Disc Player Error Messages (Models with navigation system)..... 148
Playing a PC Card (Models with navigation system)..... 149
PC Card Error Messages (Models with navigation system) 161
Playing an iPod® (Models with navigation system)..... 162
iPod® Error Messages (Models with navigation system) 172
Playing a USB Flash Memory Device (Models with navigation system)..... 173
USB Flash Memory Device Error Messages (Models with navigation system) 182
Protecting Your Discs 183
FM/AM Radio Reception 186
Radio Theft Protection 188
Setting the Clock 189
Remote Audio Controls 191
Auxiliary Input Jack 192
Cruise Control 193
Rearview Camera and Monitor 196

Vents, Heating, and A/C

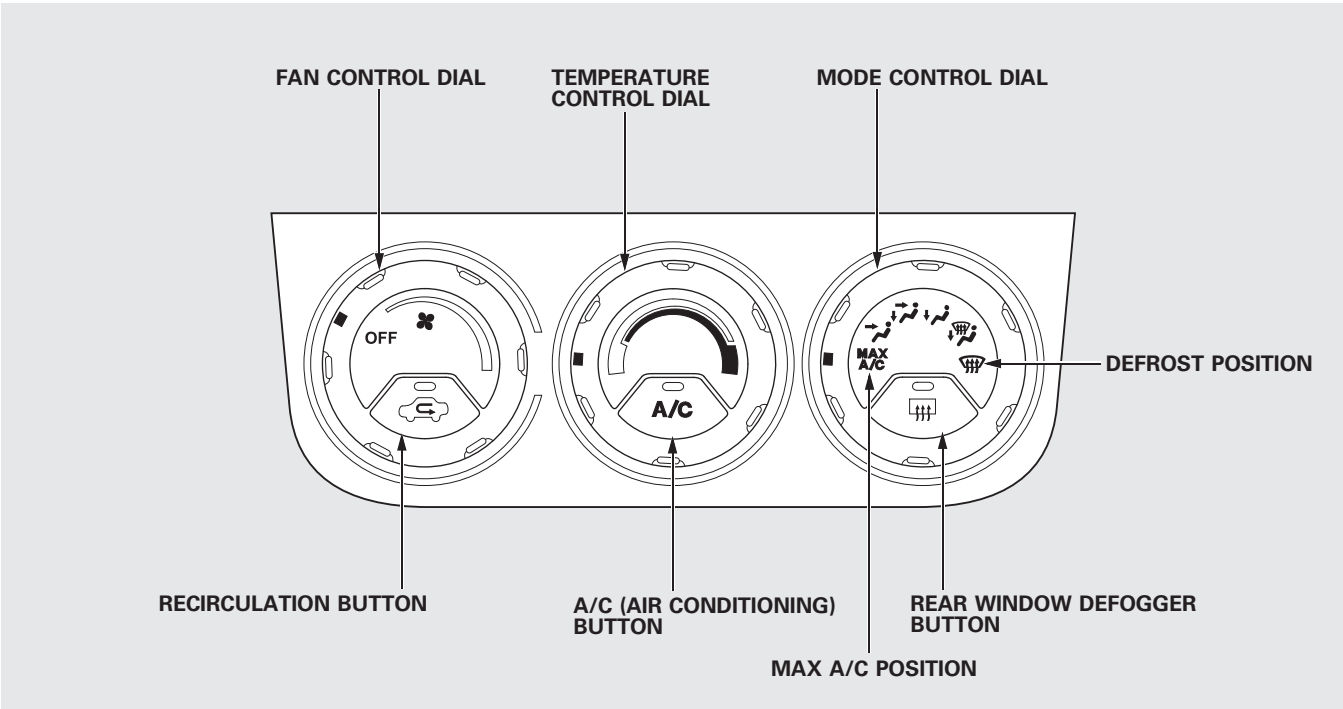

Air Flow Controls

Fan Control Dial
Turn this dial clockwise to increase the fan speed and airflow.

Temperature Control Dial
Turning this dial clockwise increases the temperature of the airflow.

Air Conditioning (A/C) Button
This button turns the air conditioning on and off. The indicator in the button is on when the A/C is on.

Recirculation Button
When the recirculation indicator is on, air from the vehicle's interior is sent throughout the system again. When the indicator is off, air is brought in from the outside of the vehicle (fresh air mode).

The outside air intakes for the heating and cooling system are at the base of the windshield. Keep this area clear of leaves and other debris.

The system should be left in fresh air mode under almost all conditions. Keeping the system in recirculation mode, particularly with the A/C off, can cause the windows to fog up.

Switch to recirculation mode when driving through dusty or smoky conditions, then return to fresh air mode.

Rear Window Defogger Button
This button turns the rear window defogger on and off (see page 74).

Mode Control Dial
Use the mode control dial to select the vents the air flows from. Some air will flow from the dashboard vents in all modes.

MAX A/C The system automatically turns on the A/C and switches to recirculation mode. Air flows from the center and side vents in the dashboard (see page 106).

Air flows from the center and corner vents in the dashboard.

Airflow is divided between the vents in the dashboard and the floor vents.

Air flows from the floor vents. When you select , the system automatically switches to fresh air mode.

Airflow is divided between the floor vents and the defroster vents at the base of the windshield.

CONTINUED

Air flows from the defroster vents at the base of the windshield.

When you select or , the system automatically switches to fresh air mode and turns on the A/C. The A/C indicator does not come on.

Ventilation
The flow-through ventilation system draws in outside air, circulates it through the interior, then discharges it through vents near the tailgate.

1. Set the temperature to the lower limit.
2. Make sure the A/C is off.
3. Select and fresh air mode.
4. Set the fan to the desired speed.

Using the Heater
The heater uses engine coolant to warm the air. If the engine is cold, it will be several minutes before you feel warm air coming from the system.

1. Select and fresh air mode.
2. Set the fan to the desired speed.
3. Adjust the warmth of the air with the temperature control dial.

Using the A/C
Air conditioning places an extra load on the engine. Watch the engine coolant temperature gauge (see page 67). If it moves near the red zone, turn off the A/C until the gauge reading returns to normal.

1. Turn on the A/C by pressing the button. The indicator in the button comes on when a fan speed is selected.
2. Set the temperature to the lower limit.
3. Select .
4. If the outside air is humid, select recirculation mode. If the outside air is dry, select fresh air mode.
5. Set the fan to the desired speed.

If the interior is very warm, you can cool it down more rapidly by partially opening the windows, turning on the A/C, and setting the fan to maximum speed in fresh air mode.

To cool the interior with MAX A/C:

1. Set the mode control dial to MAX A/C.
   The system automatically turns on the A/C, selects and switches to recirculation mode.
2. Set the temperature to the lower limit.
3. Set the fan to the desired speed.

Dehumidify the Interior
Air conditioning, as it cools, removes moisture from the air. When used in combination with the heater, it makes the interior warm and dry and can prevent the windows from fogging up.

1. Turn the fan on.
2. Turn on the air conditioning.
3. Select and fresh air mode.
4. Adjust the temperature to your preference.

This setting is suitable for all driving conditions whenever the outside temperature is above 32°F (0°C).

To Defog and Defrost
To remove fog from the inside of the windows:

1. Set the fan to the desired speed, or high for faster defrosting.
2. Select . The system automatically switches to fresh air mode and turns on the A/C. The A/C indicator will not come on if it was off to start with.
3. Adjust the temperature control dial so the airflow feels warm.
4. Select to help clear the rear window.
5. To increase airflow to the windshield, close the corner vents.

When you select or , the system automatically turns on the A/C. This helps to dehumidify the air and to defog the windshield. In either mode, you cannot turn off the A/C. When you switch to another mode, the A/C returns to its original setting, either on or off.

To Remove Exterior Frost or Ice From the Windows

1. Select . The system automatically switches to fresh air mode and turns on the A/C. The A/C indicator does not come on if the A/C was off to start with.
2. Select .
3. Set the fan and temperature controls to maximum level.
4. Select to help clear the rear window.

To clear the windows faster, you can close the dashboard corner vents by rotating the tab below each vent. This sends more warm air to the windshield defroster vents. Once the windshield is clear, select fresh air mode to avoid fogging the windows.

For your safety, make sure you have a clear view through all the windows before driving.

To Turn Everything Off

Turning the fan speed control dial all the way to the left shuts the system off.

- Keep the system off for short periods only.
- To keep stale air and mustiness from collecting, you should have the fan running at all times.

An audio system is standard on all models. Read the appropriate pages (as shown below) to use your vehicle's audio system.

For vehicles without navigation system, see pages 110 through 126.

For vehicles with navigation system, see pages 127 through 182.

LX model

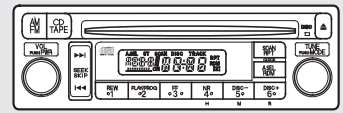

EX and SC models

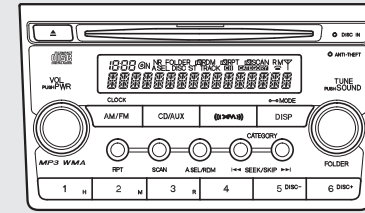

U.S. EX and SC models with navigation system

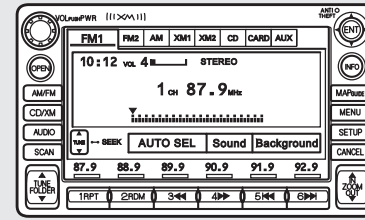

Playing the FM/AM Radio (Models without navigation system)

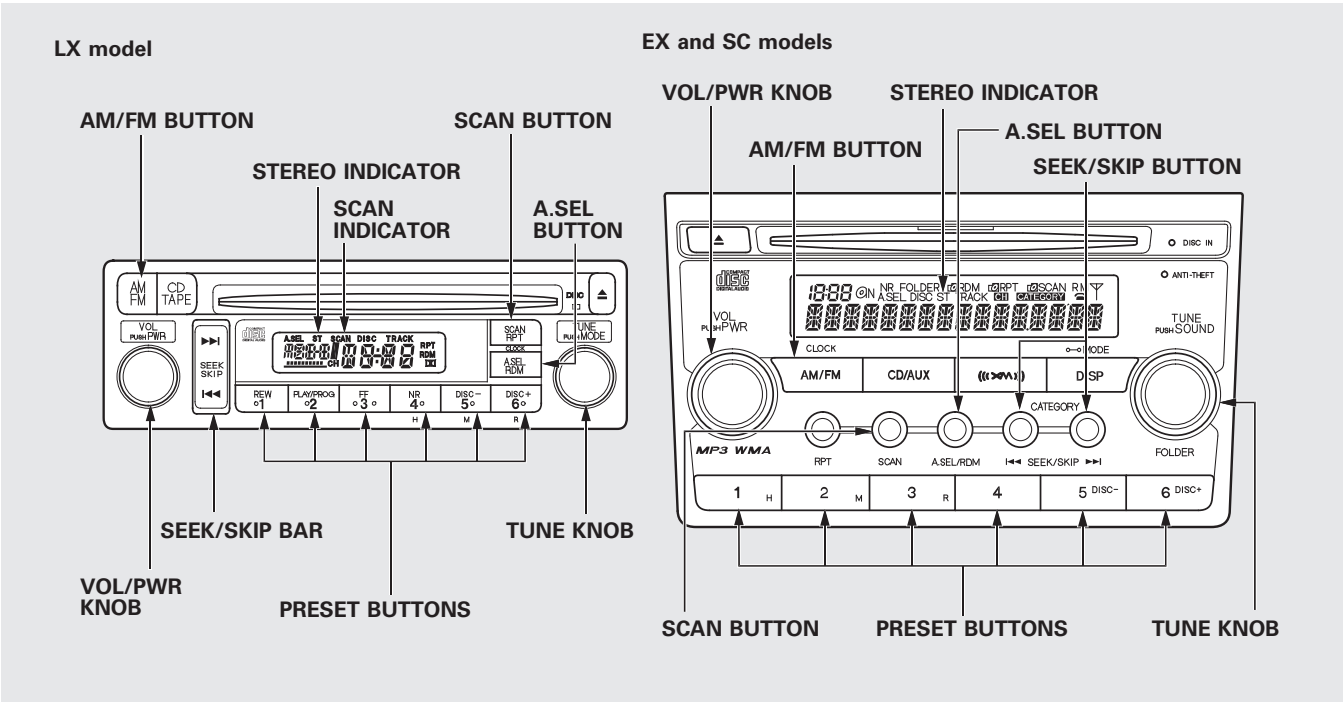

To Play the Radio
The ignition switch must be in the ACCESSORY (I) or the ON (II) position. Turn the system on by pushing the VOL/PWR knob or the AM/FM button. Adjust the volume by turning the same knob.

The band and frequency that the radio was last tuned to is displayed. To change bands, press the AM/FM button. On the FM band, ST will be displayed if the station is broadcasting in stereo. Stereo reproduction in AM is not available.

To Select a Station
You can use any of five methods to find radio stations on the selected band: tune, seek, scan, the preset buttons, and auto select.

TUNE – Use the TUNE knob to tune the radio to a desired frequency. Turn the knob right to tune to a higher frequency, or left to tune to a lower frequency.

SEEK – The seek function searches up and down from the current frequency to find a station with a strong signal. To activate it, press either (⏮ or ⏭), then release it.

SCAN – The scan function samples all stations with strong signals on the selected band. To activate it, press the SCAN button, then release it. You will see SCAN in the display. The system will scan for a station with a strong signal. When it finds one, it will stop and play that station for about 5 seconds (LX model) or 10 seconds (EX and SC models).

If you do nothing, the system will then scan for the next strong station and play it for 5 seconds (LX model) or 10 seconds (EX and SC models). When it plays a station you want to listen to, press the SCAN button again.

Preset – Each preset button can store one frequency on AM and two frequencies on FM.

1. Select the desired band, AM or FM. FM1 and FM2 let you store six stations each.
2. Use the tune, seek, or scan function to tune the radio to a desired station.
3. Pick a preset number (1 – 6), and hold it until you hear a beep.
4. Repeat steps 1 through 3 to store a total of six stations on AM and twelve stations on FM.

CONTINUED

Playing the FM/AM Radio (Models without navigation system)

AUTO SELECT – If you are traveling and can no longer receive your preset stations, you can use the auto select feature to find stations in the local area.

Press the A.SEL button. “A.SEL” flashes in the display, and the system goes into scan mode for several seconds. It stores the frequencies of six AM and twelve FM stations in the preset buttons.

You will see a “0” displayed after pressing a preset button if auto select cannot find a strong station for every preset button.

If you do not like the stations auto select has stored, you can store other frequencies on the preset buttons as previously described.

To turn off auto select, press the A.SEL button. This restores the presets you originally set.

For information on FM/AM radio frequencies and reception, see page 186.

Adjusting the Sound
Press the MODE or SOUND knob repeatedly to display the bass (BAS), treble (TRE), balance (BAL), fader (FAD), and sub-woofer (SUB-W)* settings.
*: If equipped

Each mode is shown in the display as it changes. Turn the MODE or SOUND knob to adjust the setting to your liking. When the level reaches the center, you will see “C” in the display. The system will automatically return the display to the selected audio mode about 5 seconds after you stop adjusting a mode.

Balance/Fader – These two modes adjust the strength of the sound coming from each speaker. BAL adjusts the side-to-side strength, while FAD adjusts the front-to-back strength.

Treble/Bass/Sub-Woofer – Use the TRE/BAS/SUB-W modes to adjust the tone to your liking.

XM® Radio

On EX and SC models

Your vehicle is capable of receiving XM® Radio anywhere in the United States, and Canada except Hawaii, Alaska and Puerto Rico. XM is a registered trademark of Sirius XM Radio®, Inc. and XM CANADA® is a registered business name of Canadian Satellite Radio Inc.

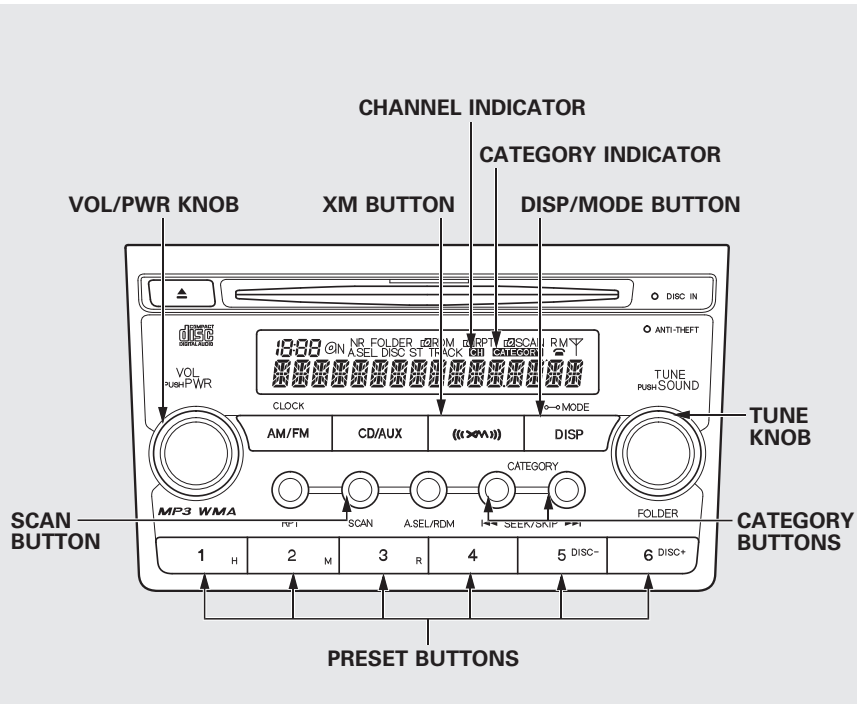

CONTINUED

Playing the XM® Radio (Models without navigation system)

XM Radio receives signals from two satellites to produce clear, high-quality digital reception. It offers many channels in several categories. Along with a large selection of different types of music, XM Radio allows you to view channel and category selections in the display.

Operating the XM Radio
To listen to the XM Radio, turn the ignition switch to the ACCESSORY (I) or ON (II) position. Push the VOL/PWR knob to turn on the audio system, and press the XM button. Adjust the volume by turning the VOL/PWR knob. The last channel you listened to will show in the display.

MODE – To switch between channel mode and category mode, press and hold the DISP/MODE button until the mode changes.

In the channel mode, you can select all of the available channels. In the category mode, such as Jazz, Rock, Classical, etc., you can select all of the channels within that category.

Each time you press and release the DISP/MODE button, the display changes in the following sequence: channel name, channel number, category, artist name, and music title.

You may experience periods when XM Radio does not transmit the artist's name and song title information. If this happens, there is nothing wrong with your system.

TUNE – Turn the TUNE knob left or right to select channels. In the category mode, you can only select channels within that category.

CATEGORY (⏮ or ⏭) – Press either button to select another category.

SCAN – The scan function gives you sampling of all channels while in the channel mode. In the category mode, only the stations within that category are scanned. To activate scan, press the SCAN button. The system plays each channel in numerical order for a few seconds, then selects the next channel. When you hear a channel you want to continue listening to, press the button.

Preset – You can store up to 12 preset channels using the six preset buttons. Each button stores one channel from the XM1 band and one channel from the XM2 band.

To store a channel:

1. Press the XM button. Either XM1 or XM2 will show in the display.
2. Use the TUNE knob, the CATEGORY buttons, or the SCAN buttons to tune to a desired channel.
   In category mode, only channels within that category can be selected. In channel mode, all channels can be selected.
3. Pick the preset button you want for that channel. Press and hold the button until you hear a beep.
4. Repeat steps 2 and 3 to store the first six channels.
5. Press the XM button again. The other XM band will show. Store the next six channels using steps 2 and 3.

Once a channel is stored, press and release the proper preset button to tune to it.

CONTINUED

XM Radio Display Messages

"LOADING" – XM is loading the audio or program information.

"OFF AIR" – The channel currently selected is no longer broadcasting.

"UPDATING" – The encryption code is being updated. Wait until the encryption code is fully updated. Channels 0 and 1 should still work normally.

"NO SIGNAL" – The signal is currently too weak. Move the vehicle to an area away from tall buildings, and with an unobstructed view of the southern horizon.

"- - - -" – The selected channel number does not exist, is not part of your subscription, or this channel has no artist or title information at this time.

"ANTENNA" – There is a problem with the XM antenna. Please consult your dealer.

Playing the XM® Radio (Models without navigation system)

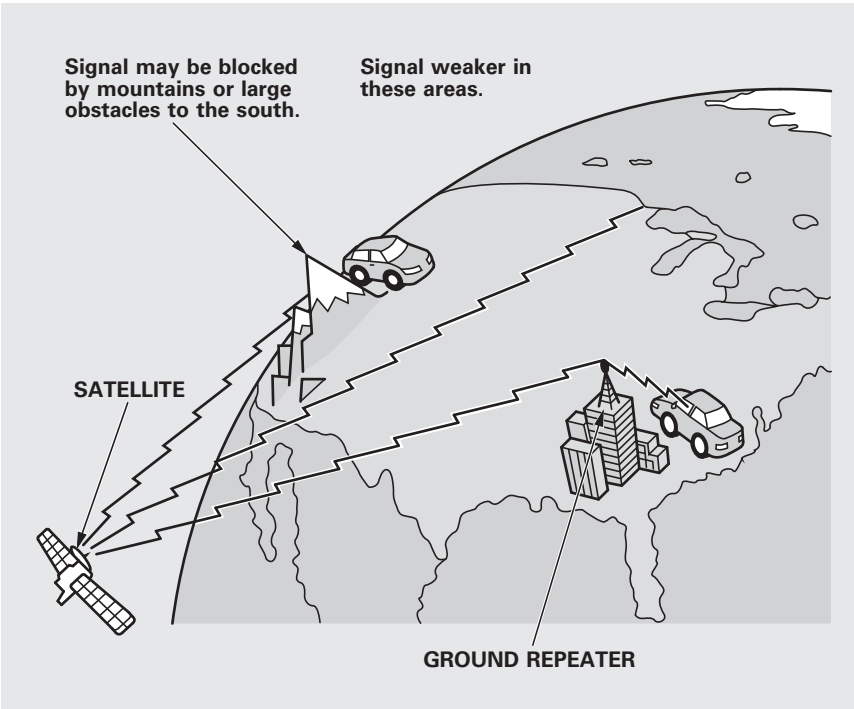

The XM satellites are in orbit over the equator; therefore, objects south of the vehicle may cause satellite reception interruptions. To help compensate for this, ground-based repeaters are placed in major metropolitan areas.

Satellite signals are more likely to be blocked by tall buildings and mountains the farther north you travel from the equator. Carrying large items on a roof rack can also block the signal.

CONTINUED

Playing the XM® Radio (Models without navigation system)

Depending on where you drive, you may experience reception problems. Interference can be caused by any of these conditions:

- Driving on the north side of an east/west mountain road.
- Driving on the north side of a large commercial truck on an east/west road.
- Driving in tunnels.
- Driving on a road beside a vertical wall, steep cliff, or hill to the south of you.
- Driving on the lower level of a multi-tiered road.
- Driving on a single lane road alongside dense trees taller than 50 ft. (15 m) to the south of you.
- Large items carried on a roof rack.

There may be other geographic situations that could affect XM Radio reception.

As required by the FCC: Changes or modifications not expressly approved by the party responsible for compliance could void the user's authority to operate the equipment.

Receiving XM Radio Service
If your XM Radio service has expired or you purchased your vehicle from a previous owner, you can listen to a sampling of the broadcasts available on XM Radio. With the ignition switch in the ACCESSORY (I) or ON (II) position, push the VOL/PWR knob to turn on the audio system and press the XM button. A variety of music types and styles will play.

If you decide to purchase XM Radio service, contact XM Radio at *www.xmradio.com,* or at 1-800-852-9696. In Canada, contact XM CANADA at *www.xmradio.ca*, or at 1-877-209-0079. You will need to give them your radio I. D. number and your credit card number. To get your radio I.D. number, turn the TUNE knob until “0” appears in the display. Your I.D. will appear in the display.

After you've registered with XM Radio, keep your audio system in the XM Radio mode while you wait for activation. This should take about 30 minutes.

While waiting for activation, make sure your vehicle remains in an open area with good reception. Once your audio system is activated, you'll be able to listen to XM Radio broadcasts. XM Radio will continue to send an activation signal to your vehicle for at least 12 hours from the activation request. If the service has not been activated after 36 hours, contact XM Radio. In Canada, contact XM CANADA.

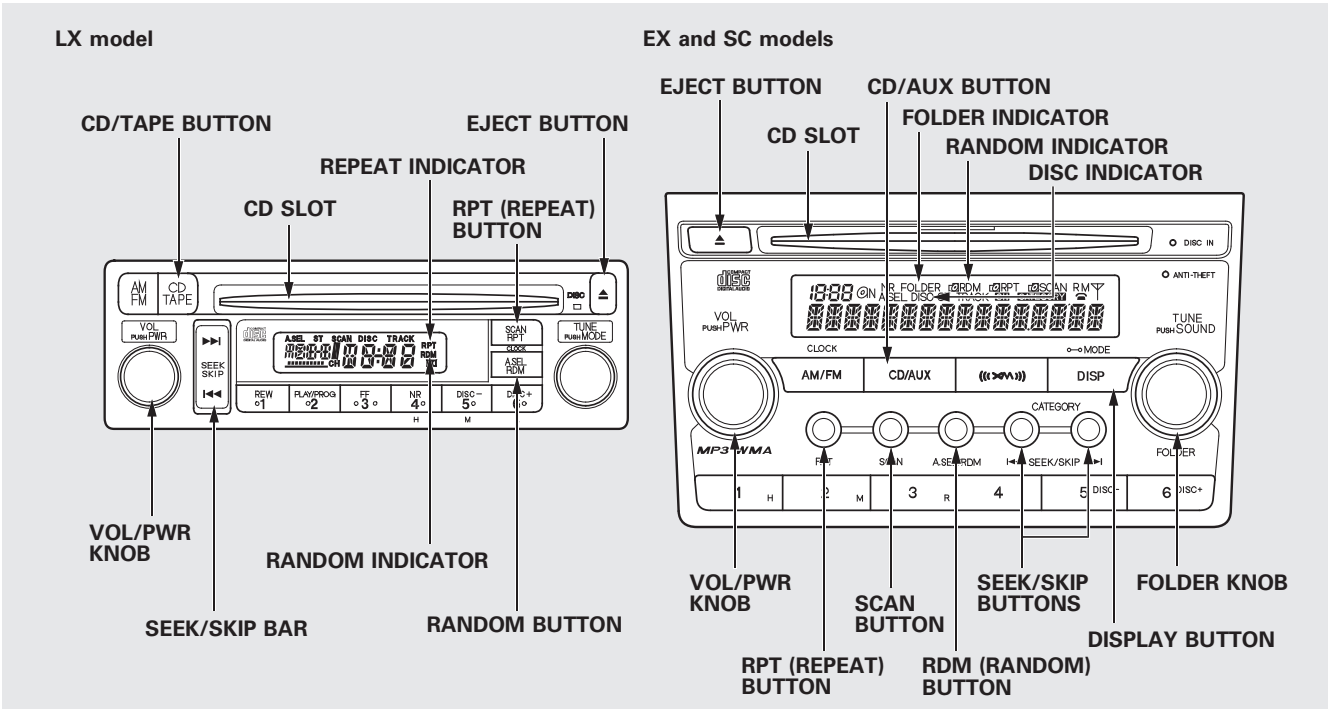
LX model
CD/TAPE BUTTON
EJECT BUTTON
REPEAT INDICATOR
CD SLOT
RPT (REPEAT) BUTTON
VOL/PWR KNOB
RANDOM INDICATOR
SEEK/SKIP BAR
RANDOM BUTTON
EX and SC models
EJECT BUTTON
CD/AUX BUTTON
FOLDER INDICATOR
CD SLOT
RANDOM INDICATOR
DISC INDICATOR
VOL/PWR KNOB
SCAN BUTTON
SEEK/SKIP BUTTONS
FOLDER KNOB
DISPLAY BUTTON
RPT (REPEAT) BUTTON
RDM (RANDOM) BUTTON

CONTINUED

Playing a Disc (Models without navigation system)

To Play a Disc
To load or play discs, the ignition switch must be in the ACCESSORY (I) or ON (II) position.

NOTICE

Do not use discs with adhesive labels. The label can curl up and cause the disc to jam in the unit.

You operate the disc player with the same controls used for the radio. To select the disc player, press the CD/TAPE or the CD/AUX button. You will see "CD" in the display. The number of the track playing is shown in the display. The system will continuously play a disc until you change modes.

Video CDs and DVDs do not work in this unit.

On EX and SC models
The disc player can also play CD-Rs and CD-RWs compressed in MP3 or WMA formats.

When playing a disc in MP3, you will see "MP3" in the display. The folder and track numbers are displayed. Each disc can hold up to 400 playable files within 8 folder layers. A disc can support a maximum number of 100 folders, and each folder can hold 255 playable files.

The specifications for compatible MP3 file are:

- Sampling frequency:
  32/44.1/48 kHz (MPEG1)
  16/22.05/24 kHz (MPEG2)
- Bitrate:
  8/16/24/32/40/48/56/64/80/96/112/128/160/192/224/256/320 kbps
- Compatible with variable bitrate and multi-session

When playing a disc in WMA, you will see "WMA" in the display. The folder and track numbers are displayed. Each disc can hold up to 200 files within 16 subdirectories, 8 folder layers. A disc can support a maximum number of 100 folders, and each folder can hold 255 playable files.

The specifications for compatible WMA file are:

- Sampling frequency:
  32/44.1/48 kHz
- Bitrate:
  48/64/80/96/128/160/192 kbps
- Compatible with variable bitrate and multi-session

NOTE: If a file on an MP3 or WMA disc is protected by digital rights management (DRM), the audio unit displays FORMAT, and then skips to the next file.

Insert the disc about halfway into the disc slot. The drive will pull the disc in the rest of the way and begin to play it. When the system reaches the end of the disc, it will return to the beginning and play the disc again.

To play the radio when a disc is playing, press the AM/FM button. Press the CD/TAPE or CD/AUX button again to switch back to the CD player.

If you turn the system off while a disc is playing, either with the VOL/PWR knob or by turning off the ignition switch, the disc will stay in the drive. When you turn the system back on, the disc will begin playing where it left off.

On EX and SC models
If you press the DISP/MODE button while playing a disc, additional information (track, album, artist, etc.) may be displayed.

To Change or Select Tracks/Files
On EX and SC models
Use the SEEK/SKIP button while a disc is playing to select passages and change tracks (files in MP3/WMA mode).

In MP3/WMA mode, use the FOLDER knob to select folders in the disc, and use the SEEK/SKIP button to change files.

SEEK/SKIP – Each time you press and release the ►►I, the player skips forward to the beginning of the next track (files in MP3/WMA mode). Press and release the I◄◄ to skip backward to the beginning of the current track. Press it again to skip to the beginning of the previous track.

To move rapidly within a track, press and hold ►►I or I◄◄.

On LX models
You will see CUE or REW in the display while moving within a track.

CONTINUED

Playing a Disc (Models without navigation system)

REPEAT (TRACK/FILE REPEAT) – To continuously replay a track (files in MP3/WMA mode), press and release the RPT button. You will see RPT in the display. Press the RPT button again to turn it off.

On EX and SC models
In MP3/WMA mode
FOLDER SELECTION – To select a different folder, use the FOLDER knob to move to the beginning of the next folder. Turn the knob right to move to the beginning of the current folder. Turn the knob left to skip to the beginning of the previous folder.

On EX and SC models
In MP3/WMA mode
FOLDER-REPEAT – This feature, when activated, replays all the files on the selected folder in the order they are compressed in MP3/WMA. To activate folder repeat, press and hold the RPT button for 2 seconds. You will see RPT in the display. The system continuously replays the current folder. Press and hold the RPT button for 2 seconds to turn it off.

RANDOM (Random within a Disc) – This feature plays the tracks (all files in each folder in MP3/WMA mode) within a disc in random order. To activate random play, press and release the RDM button. You will see RDM in the display. Press the RDM button again to return to normal play.

On EX and SC models
In MP3/WMA mode
FOLDER-RANDOM – This feature, when activated, plays the files within a folder in random order, rather than in the order they are compressed in MP3/WMA. To activate folder random play, press and hold the RDM button. You will see RDM in the display. The system will then select and play files randomly. This continues until you deactivate folder random play by pressing the RDM button again or selecting a different folder with the FOLDER knob.

On EX and SC models
SCAN – The scan function samples all tracks/files on the disc in the order they are recorded. To activate scan, press and hold the SCAN button until you hear a beep. You will see SCAN in the display. You will get a 10 second sampling of each track/file on the disc. Press the SCAN button again to exit scan and play the last track/file sampled.

Pressing either side of the SEEK/SKIP button also turns off scan.

On EX and SC models
In MP3/WMA mode
FOLDER SCAN – This feature, when activated, samples all files on the selected folder in order. To activate folder scan, press and hold the SCAN button until you hear a beep. You will see SCAN in the display. The system will then play the first file for about 10 seconds. If you do nothing, the system will then play the first file in each folder for 10 seconds. When it plays a file you want to continue listening to, press the SCAN button again.

Pressing either side of the SEEK/SKIP button or selecting a different folder with the FOLDER knob also turns off folder scan.

To Stop Playing a Disc
Press the eject button (⏏) to remove the disc. If you eject the disc, but do not remove it from the slot, the system will automatically reload the disc after 10 seconds (EX and SC models) or 15 seconds (LX model) and put it in pause mode. To begin playing, press the CD/TAPE or CD/AUX button.

Press the AM/FM button to switch to the radio while a disc is playing. To play the disc, press the CD/TAPE or CD/AUX button.

If you turn the system off while a disc is playing, either with the VOL/PWR knob or by turning off the ignition switch, the disc will stay in the drive. When you turn the system back on, the disc will begin playing where it left off.

CONTINUED

Playing a Disc (Models without navigation system)

Audio System Malfunction
See pages 125 and 126 for information on error messages.

Protecting Discs
For information on how to handle and protect discs, see page 183.

Operating the Optional Disc Changer
On LX model
An optional six disc changer is available for your vehicle. This disc changer uses the same controls used for the in-dash disc player or the radio.

Load the desired discs in the magazine, and load the magazine in the changer according to the instructions that came with the unit.

To select the disc changer, press the CD/TAPE button. The disc and track numbers will be displayed. To select a different disc, use the preset 5 (DISC −) or the preset 6 (DISC +) button. To select the previous disc, press the preset 5 (DISC −), or the preset 6 (DISC +) to select the next disc in sequence.

If you select an empty slot in the magazine, the changer will search for the next available disc to load and play.

Disc Player Error Messages (Models without navigation system)

The chart on the right explains the error messages you may see in the display while playing a disc.

If you see an error message in the display while playing a disc, press the eject button. After ejecting the disc, check it for damage or deformation. If there is no damage, insert the disc again.
For additional information on damaged discs, see page 184.

The audio system will try to play the disc. If there is still a problem, the error message will reappear. Press the eject button, and pull out the disc.
Insert a different disc. If the new disc plays, there is a problem with the first disc. If the error message cycle repeats and you cannot clear it, take your vehicle to a dealer.

	Error Message	Cause	Solution
①	HEAT ERROR	High temperature	Will disappear when the temperature returns to normal.
②	HOT		
①	FORMAT	Track/File format not supported	Current track will be skipped. The next supported track or file plays automatically.
②	DISC	FOCUS error	Press the EJECT button, and pull out the disc. Check if it is inserted correctly in the disc player. Make sure the disc is not scratched or damaged. For more information, see page 184.
①	BAD DISC PLEASE CHECK OWNER'S MANUAL PUSH EJECT	Mechanical error	Press the EJECT button, and pull out the disc. Check the disc for serious damage, signs of deformation, excessive scratches, and/or dirt see page 184. Insert the disc again. If the code does not disappear, or the disc cannot be removed, consult your dealer. Do not try to force the disc out of the player.
②	ERR		
①	BAD DISC PLEASE CHECK OWNER'S MANUAL	Servo error	

①: EX and SC models
②: LX model

Disc Changer Error Messages (Models without navigation system)

If you see an error message in the display while playing a disc, find the cause in the chart to the right. If you cannot clear the error message, take your vehicle to your dealer.

Error Message	Cause	Solution
DISC	FOCUS error	Press the EJECT button, and pull out the disc. Check if it is inserted correctly in the disc player. Make sure the disc is not scratched or damaged. For more information, see page 184.
NO	No disc in the magazine	Insert disc.
ERR	Mechanical error	Press the EJECT button, and pull out the disc. Check the disc for damage or deformation. For more information, see page 184. If the disc cannot be pulled out, or the error message does not disappear after the disc is ejected, see your dealer.
HOT	High temperature	Will disappear when the temperature returns to normal.
EJEC	No magazine in the changer	Insert magazine.

Voice Control System

In addition to the standard audio controls, the audio system in your vehicle can be operated using the voice control system. See the navigation system manual for complete details.

Playing the FM/AM Radio

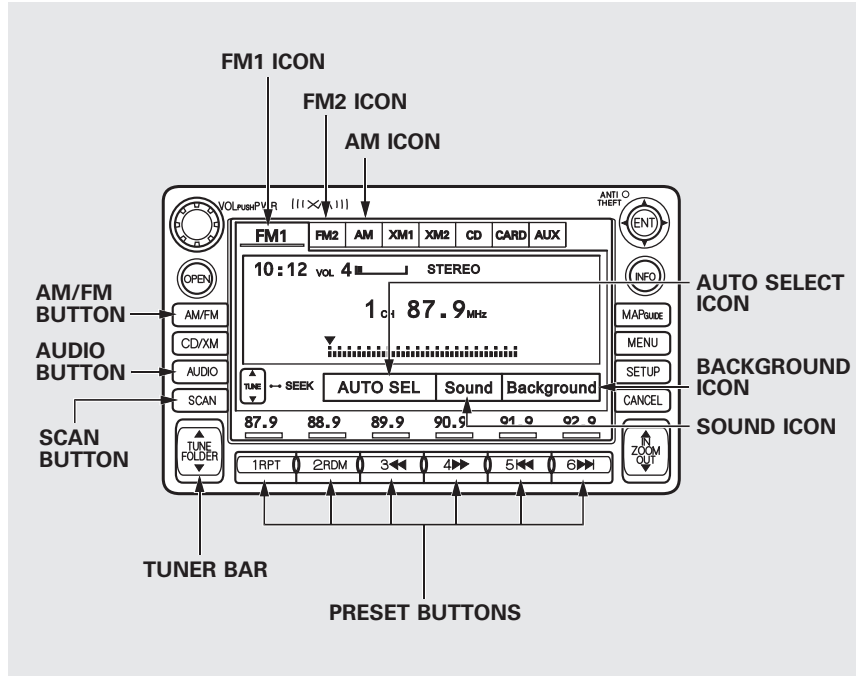

CONTINUED

Playing the FM/AM Radio (Models with navigation system)

To Play the FM/AM Radio
The ignition switch must be in the ACCESSORY (I) or ON (II) position. Turn the system on by pushing the power/volume knob or the AM/FM button. Adjust the volume by turning the power/volume knob.

Pushing the AUDIO button will also turn on the system.

You can also operate the audio system without using the control icons on the audio screen. Use the control buttons on the left side of the screen. The status bar appears on the bottom of the screen each time you operate any of the control buttons. On the navigation screen, you can also see audio information by touching the AUDIO INFO icon on the lower of the screen.

The band and frequency that the radio was last tuned to are displayed. To change bands, press the AM/FM button, or touch the desired band icon (FM1, FM2, AM, XM1, or XM2). On the FM band, STEREO will be displayed if the station is broadcasting in stereo. Stereo reproduction on AM is not available.

For information on XM Radio, see page 132.

To Select a Station
You can use any of five methods to find radio stations on the selected band: tune, seek, scan, the preset buttons, and auto select.

TUNE – Use the TUNE bar to tune the radio to a desired frequency. Press the ▲ side of the bar to tune to a higher frequency, and press the ▼ side to tune to a lower frequency.

Press and hold the ▲ or ▼ side of the TUNE bar until you hear two beeps to change the frequency rapidly. Release the bar when the display reaches the desired frequency.

SEEK – The seek function searches up and down from the current frequency to find a station with a strong signal. To activate it, press and hold the ▲ or ▼ side of the TUNE bar until you hear a beep, then release it.

SCAN – The scan function samples all stations with strong signals on the selected band. To activate it, press the SCAN button, then release it. You will see SCAN in the display. The system will scan for a station with a strong signal. When it finds one, it will stop and play that station for about 10 seconds.

If you do nothing, the system will then scan for the next strong station and play it for 10 seconds. When it plays a station you want to listen to, press the SCAN button again.

Preset – Each preset button can store one frequency on AM and two frequencies on FM.

1. Select the desired band, AM or FM. FM1 and FM2 let you store six stations each.
2. Use the tune, seek, or scan function to tune the radio to a desired station.
3. Pick a preset button, and hold it until you hear a beep.
4. Repeat steps 1 through 3 to store a total of six stations on AM and twelve stations on FM.

Each preset button's frequency is shown on the bottom of the audio display.

AUTO SELECT – If you are traveling and can no longer receive your preset stations, you can use the auto select feature to find stations in the local area.

Press the AUDIO button to view the audio control icons, then press the AUTO SEL icon. You will see AUTO SEL flashing in the display, and the system goes into scan mode for several seconds. It stores the frequencies of six AM, and twelve FM stations in the preset buttons.

CONTINUED

Playing the FM/AM Radio (Models with navigation system)

You will see a “0” displayed after pressing a preset button if auto select cannot find a strong station for every preset button.

If you do not like the stations auto select has stored, you can store other frequencies on the preset buttons as previously described.

To turn off auto select, press the AUTO SEL icon. This restores the presets you originally set.

For information on FM/AM radio frequencies and reception, see page 186.

Adjusting the Sound

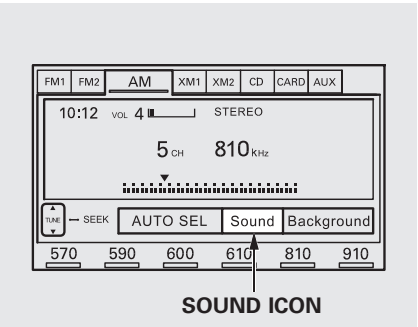

You can adjust the sound on the navigation screen. To adjust the sound, push the AUDIO button, then enter the sound grid by touching the SOUND icon on the display.

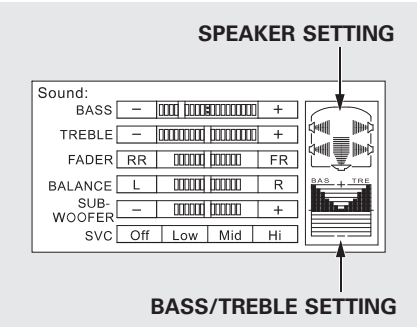

BASS – Adjusts the bass.

TREBLE – Adjusts the treble. To adjust the treble and bass, touch + or – on each side of the treble or bass adjustment bar. The adjustment bar on the right lower display shows you the current setting.

FADER – Adjusts the front-to-back strength of the sound. To adjust the front/rear fader, touch the FR or RR icon.

BALANCE – Adjusts the side-to-side strength of the sound.
To adjust the left/right balance, touch the L or R icon.

SUBWOOFER – Adjusts the strength of sound from the subwoofer speaker. To adjust the sound strength, touch [+] or [–] on each side of the adjustment bar.

The right upper display shows you the current setting of the sound strength coming from each speaker.

SVC (speed-sensitive volume compensation) – The SVC mode controls the volume based on vehicle speed. The faster you go, the louder the audio volume becomes. As you slow down, the audio volume decreases. Touch the appropriate icon (Low, Mid, Hi, Off) to select the mode.

This function is set to Mid as the default setting when the vehicle leaves the factory. If you feel the sound is too loud, choose low. If you feel the sound is too quiet, choose Hi.

You can also select the icon with the joystick. Move it up and down to move the highlighting and scroll through lists. Select the icon, then move the joystick left or right to change the setting.

The system will return to the audio display about 10 seconds after you stop adjusting a mode.

Screen Mode
You can select the background screen to display the sound level. There are three screen modes: level (the sound level is shown with the vertical bars), spectrum analysis (the sound level appears as ripples of water), and off. Each time you touch the background icon, the display changes.

Audio System Lighting
You can use the instrument panel brightness control knob to adjust the illumination of the audio system (see page 72). The audio system illuminates when the parking lights are on, even if the radio is off.

Playing the XM® Radio (Models with navigation system)

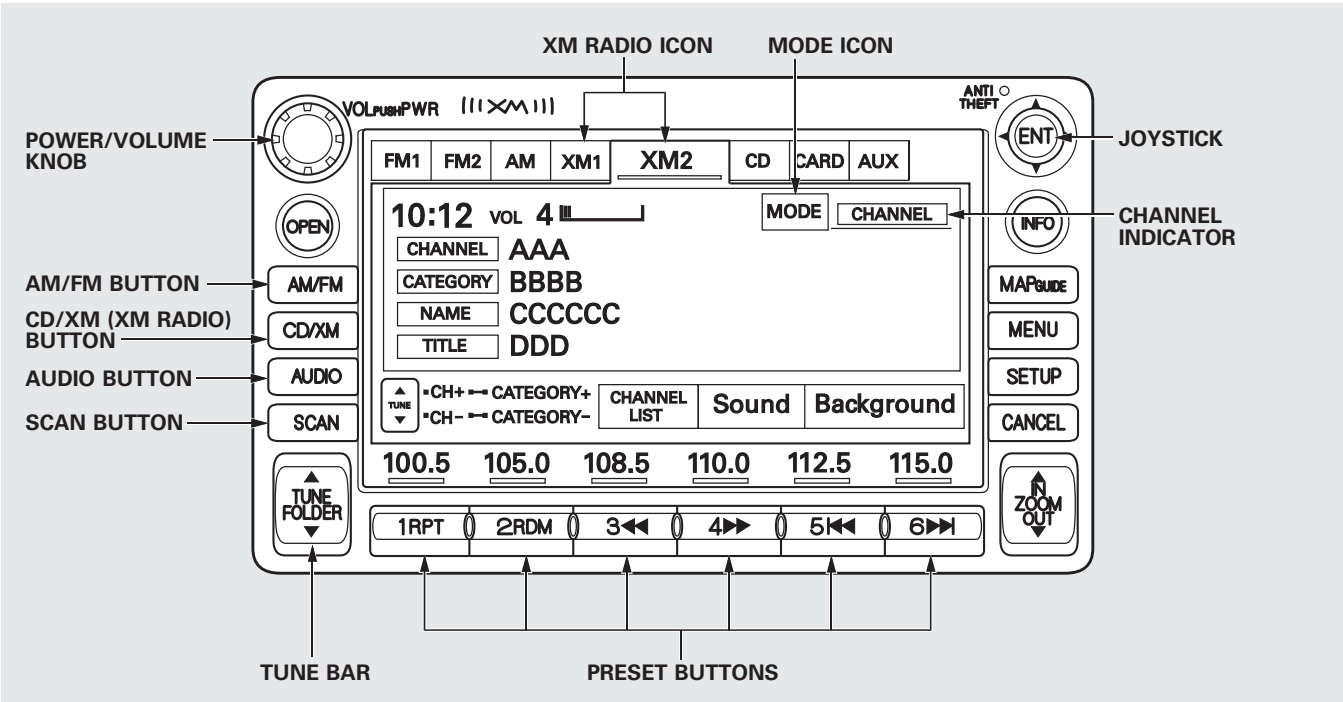

Playing the XM® Radio (Models with navigation system)

Your vehicle is capable of receiving XM® Radio anywhere in the United States, and Canada except Hawaii, Alaska and Puerto Rico. XM is a registered trademark of Sirius XM Radio®, Inc. and XM CANADA® is a registered business name of Canadian Satellite Radio Inc.

XM Radio receives signals from two satellites to produce clear, high-quality digital reception. It offers many channels in several categories. Along with a large selection of different types of music, XM Radio allows you to view channel and category selections in the display.

When you press and hold the AUDIO button, the display also shows all XM information.

Operating the XM Radio
To listen to XM Radio, turn the ignition switch to the ACCESSORY (I) or the ON (II) position. Press the CD/XM button to select XM Radio. Adjust the volume by turning the knob. The last channel you listened to will show in the display.

You can also change to the XM Radio while you are listening to an FM station, AM station, disc, PC card, etc., by touching the XM1 or XM2 icon on the audio display.

You can also operate the radio using the control buttons on the left side of the screen. The status bar appears on the bottom of the screen each time you press any of the control buttons. On the navigation screen, you can also see the audio information by touching the AUDIO INFO icon on the lower of the screen.

MODE – To switch between channel mode and category mode, touch the MODE icon. In channel mode, you can select all of the available channels. In category mode, such as Jazz, Rock, Classical, etc., you can select all of the channels within that category. Each time you touch and release the MODE icon, the display changes between the channel mode and the category mode.

CONTINUED

Playing the XM® Radio (Models with navigation system)

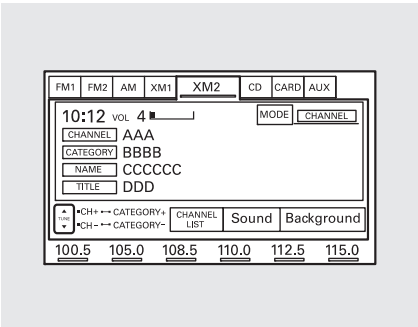

On the audio display, you will see the selected CHANNEL (number), CATEGORY, NAME (artist name), and TITLE (music title).

You may experience periods when XM Radio does not transmit the artist's name and song title information. If this happens, there is nothing wrong with your system.

TUNE – Press the TUNE bar to change channel selections. Press ▲ for higher numbered channels and ▼ for lower numbered channels. In the category mode, you can only select channels within that category.

CATEGORY – Press and hold either side of the TUNE bar (|◄◄ or ►►|) until you hear a beep to select another category.

SCAN – The scan function gives you a sampling of all channels while in the channel mode. In the category mode, only the channels within that category are scanned. To activate scan, press the SCAN button or touch the SCAN icon on the screen. The system plays each channel in numerical order for a few seconds, then selects the next channel. When you hear a channel you want to listen to, press the button or touch the icon again.

Preset – You can store up to 12 preset channels using each preset button or preset icons on the screen. Each preset button or icon stores one channel from the XM1 band and one channel from the XM2 band.

To store a channel:

1. Press the CD/XM button. Either XM1 or XM2 will show in the display.
2. Use the tune, seek, or scan function to tune to a desired channel.

In category mode, only channels within that category can be selected. In channel mode, all channels can be selected.

3. Pick the preset button (icon) you want for that channel. Press and hold the button (icon) until you hear a beep.

4. Repeat steps 2 and 3 to store the first six channels.
5. Press the XM button again or touch the other XM icon (XM1 or XM2) on the audio display. Store the next six channels using steps 2 and 3.

Once a channel is stored, press and release the proper preset button (icon) to tune to it. Each preset button's channel is shown on the bottom of the audio display.

To Select a Channel from List

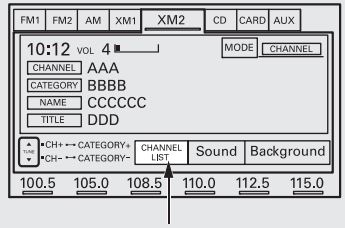

CHANNEL LIST ICON

You can also select a desired channel from the list shown on the screen. Press the AUDIO button to show the audio control display on the navigation screen.

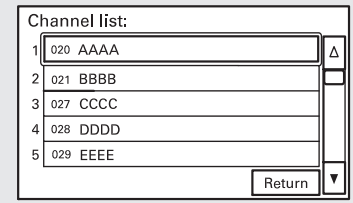

Touch the CHANNEL LIST icon to switch the display to the channel list which shows all channels in all categories. Select and touch a desired channel.

To scroll through the display, touch the ▲ or ▼ icon on the side of the screen. To go back to the previous display, touch the Return icon on the screen.

CONTINUED

Playing the XM® Radio (Models with navigation system)

To select a desired icon with the joystick, move it in the appropriate direction, then press ENT.

XM Radio Display Messages

"LOADING" – XM is loading the audio or program information.

"OFF AIR" – The channel currently selected is no longer broadcasting.

"UPDATING" – The encryption code is being updated. Wait until the encryption code is fully updated. Channels 0 and 1 should still work normally.

"NO SIGNAL" – The signal is currently too weak. Move the vehicle to an area away from tall buildings, and with an unobstructed view of the southern horizon.

"- - - - -" – The selected channel number does not exist or is not part of your subscription.

"NO INFO" – This channel has no artist or title information at this time.

"ANTENNA" – There is a problem with the XM antenna. Please consult your dealer.

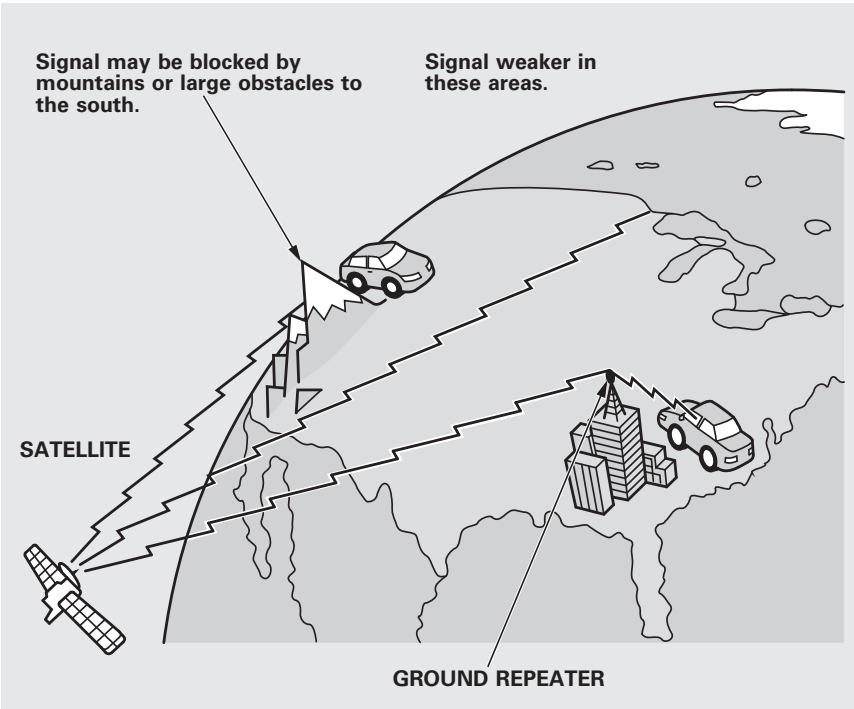

The XM satellites are in orbit over the equator; therefore, objects south of the vehicle may cause satellite reception interruptions. To help compensate for this, ground-based repeaters are placed in major metropolitan areas.

Satellite signals are more likely to be blocked by tall buildings and mountains the farther north you travel from the equator. Carrying large items on a roof rack can also block the signal.

CONTINUED

Playing the XM® Radio (Models with navigation system)

Depending on where you drive, you may experience reception problems. Interference can be caused by any of these conditions:

- Driving on the north side of an east/west mountain road.
- Driving on the north side of a large commercial truck on an east/west road.
- Driving in tunnels.
- Driving on a road beside a vertical wall, steep cliff, or hill to the south of you.
- Driving on the lower level of a multi-tiered road.
- Driving on a single lane road alongside dense trees taller than 50 ft. (15 m) to the south of you.
- Large items carried on a roof rack.

There may be other geographic situations that could affect XM Radio reception.

As required by the FCC:
Changes or modifications not expressly approved by the party responsible for compliance could void the user's authority to operate the equipment.

Receiving XM Radio Service

If your XM Radio service has expired or you purchased your vehicle from a previous owner, you can listen to a sampling of the broadcasts available on XM Radio. With the ignition switch in the ACCESSORY (I) or ON (II) position, push the power/volume knob to turn on the audio system and press the CD/XM button. A variety of music types and styles will play.

If you decide to purchase XM Radio service, contact XM Radio at *www.xmradio.com,* or at 1-800-852-9696. In Canada, contact XM CANADA at *www.xmradio.ca,* or at 1-877-209-0079. You will need to give them your radio I.D. number and your credit card number. To get your radio I.D. number, press the TUNE bar until “0” appears in the display. Your I.D. will appear in the display.

After you've registered with XM Radio, keep your audio system in the XM Radio mode while you wait for activation. This should take about 30 minutes.

While waiting for activation, make sure your vehicle remains in an open area with good reception. Once your audio system is activated, you'll be able to listen to XM Radio broadcasts. XM Radio will continue to send an activation signal to your vehicle for at least 12 hours from the activation request. If the service has not been activated after 36 hours, contact XM Radio. In Canada, contact XM CANADA.

Playing a Disc (Models with navigation system)

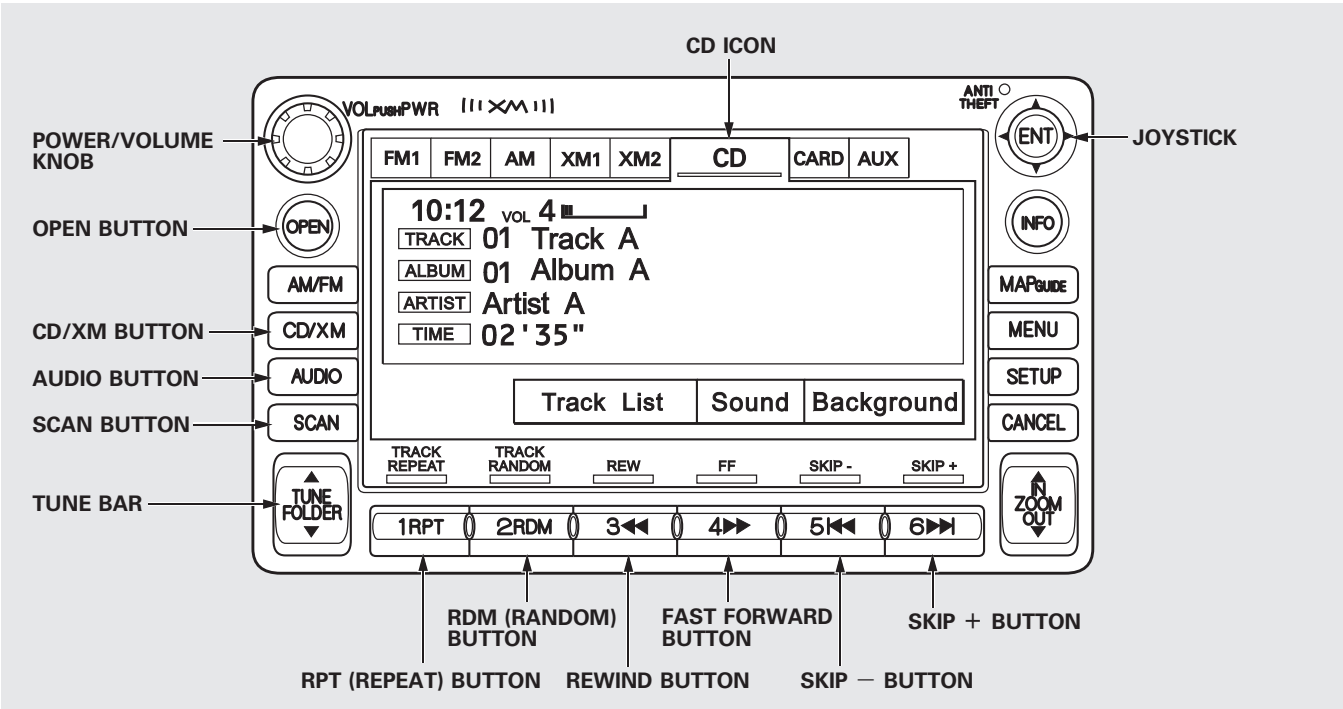

To Play a Disc
You operate the disc player with the same controls used for the radio. To load or play discs, the ignition switch must be in the ACCESSORY (I) or ON (II) position.

NOTICE

Do not use discs with adhesive labels. The label can curl up and cause the disc to jam in the unit.

This audio system can also play CD-Rs and CD-RWs compressed in MP3 or WMA formats. When playing a disc in MP3, you will see “MP3” on the screen. In WMA format, “WMA” will appear on the screen. You can select up to 99 folders and play up to 999 tracks. If the disc has a complex structure, it takes a while to read the disc before the system begins to play it.

If you have a disc that is a combination of CD-DA tracks and MP3/WMA files, you can choose the format to listen by pressing and holding CD/XM button until you hear a beep.

Video CDs and DVDs do not work in this unit.

The specifications for compatible MP3 files are:

- Sampling frequency:
  32/44.1/48 kHz (MPEG1)
  16/22.05/24 kHz (MPEG2)
- Bitrate:
  32/40/48/56/64/80/96/112/128/160/192/224/256/320 kbps (MPEG1)
  8/16/24/32/40/48/56/64/80/96/112/128/160 kbps (MPEG2)
- Compatible with variable bitrate and multi-session
- Maximum layers
  (including ROOT): 8 layers

The specifications for compatible WMA files are:

- Sampling frequency:
  22.05/32/44.1/48 kHz
- Bitrate:
  32/40/48/64/80/96/128/160/192 kbps
- Compatible with variable bit rate and multi-session
- Maximum layers
  (including ROOT): 8 layers

NOTE:
If a file on an MP3 or WMA disc is protected by digital rights management (DRM), the audio unit displays CD FORMAT, and then skips to the next file.

CONTINUED

Playing a Disc (Models with navigation system)

To Load a Disc

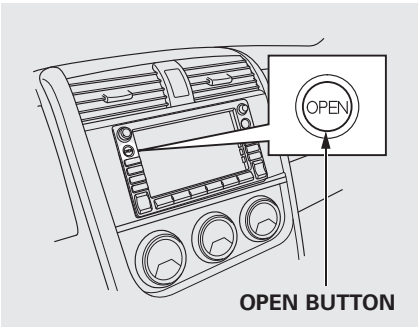

The disc player is behind the navigation screen. To use the disc player, press the OPEN button beside the screen. The screen folds back, and the disc player appears.

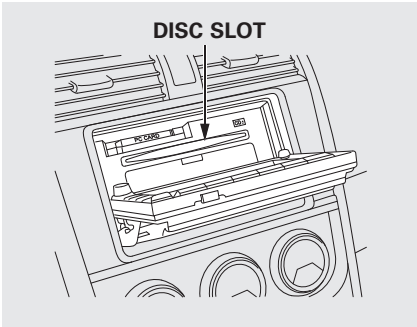

Insert a disc about halfway into the disc slot. The drive will pull the disc in the rest of the way and begin to play it.

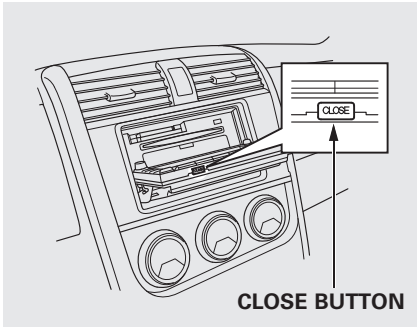

To return the screen to the upright position, press the CLOSE button on the edge of the screen panel. Do not use the folded screen as a tray. If you put a cup, for example, on the screen, the liquid inside the cup may spill on the screen when you go over a bump.

Push the AUDIO button beside the screen to show the audio display and operate the disc player.

You can also operate the audio system without using the control icons on the audio screen. Press the CD/XM button. The status bar appears on the bottom of the screen. On the navigation screen, you can see the audio information whenever you touch the AUDIO INFO icon on the lower portion of the screen.

When playing a CD recorded with text data, the track, album, and artist name are shown on the audio display. When playing a disc in MP3 or WMA, the folder number and name, the file number and name, the artist name, and the elapsed time are shown. The system will continuously play a disc until you change modes. If the disc was not recorded with text data, it will not be displayed.

To Change or Select Tracks/Files

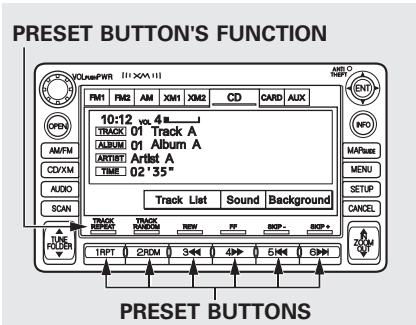

You can use the preset buttons while a disc is playing to select passages and change tracks (files in MP3 or WMA mode). Each preset button's function is shown on the bottom of the screen.

You can also select an icon with the joystick. Move it to left, right, up, or down to change the highlighting and scroll through lists. Then press the ENT on the top of the joystick to select the icon.

SKIP – Each time you press and release ►►I (preset 6), the player skips forward to the beginning of the next track (file in MP3 or WMA mode). Press and release I◄◄ (preset 5) to skip backward to the beginning of the current track. Press it again to skip to the beginning of the previous track.

FF/REW – To move rapidly within a track/file, press and hold ►► (preset 4) or ◄◄ (preset 3).

CONTINUED

Playing a Disc (Models with navigation system)

In MP3 or WMA mode
FOLDER SELECTION – To select a different folder, press either side of the TUNE bar to move to the beginning of the next folder. Press the ▲ side of the TUNE bar to skip to the next folder, and the ▼ side to move to the beginning of the previous folder.

TRACK REPEAT (FILE REPEAT) – To continuously replay a track (file in MP3 or WMA mode), press and release the RPT button (preset 1). You will see TRACK REPEAT in the display. Press the RPT button again to turn it off.

In MP3 or WMA mode
FOLDER REPEAT – This feature, when activated, replays all files on the selected folder in the order they are compressed. To activate folder repeat, press and hold the RPT button (preset 1). You will see FOLDER REPEAT in the display. The system continuously replays the current folder. Press the RPT button again to turn it off. Pressing the RDM button or selecting a different folder with the TUNE bar also turns off folder repeat.

TRACK RANDOM (Random within a disc/folder) – This feature plays the tracks within a disc (the files within a folder) in random order. To activate track random, press and release the RDM button (preset 2). You will see TRACK RANDOM in the display. Press the RDM button again to return to normal play.

In MP3 or WMA mode
FOLDER RANDOM – This feature, when activated, plays all files in each folder in random order, rather than in the order they are compressed. To activate folder random, press and hold the RDM button (preset 2). You will see FOLDER RANDOM in the display. The system then selects and plays files randomly. This continues until you deactivate folder random by pressing the RDM button again, or if you select a different folder with the TUNE bar.

SCAN (TRACK/FILE SCAN) – The scan function samples all tracks (files in MP3 or WMA) in the order they were recorded. To activate scan, press and release the SCAN button. You will see TRACK SCAN in the display. You will get a 10 second sampling of each track/file on the disc. Press the SCAN button again to get out of scan mode and play the last track/file sampled.

Pressing either SKIP button (preset 5 or 6) also turns off scan.

In MP3 or WMA mode

FOLDER SCAN – This feature, when activated, samples all the first files in each folder on the disc in order. To activate folder scan, press and hold the SCAN button. You will see FOLDER SCAN in the display.

The system plays the first file in each folder for about 10 seconds. If you do nothing, the system then plays the first file in each folder for 10 seconds each. After playing the first file of the last folder, the system goes to normal playing.

Pressing either SKIP button (preset 5 or 6), or selecting a different folder with the TUNE bar, or pressing the SCAN button, also turns off folder scan.

Using a Track List

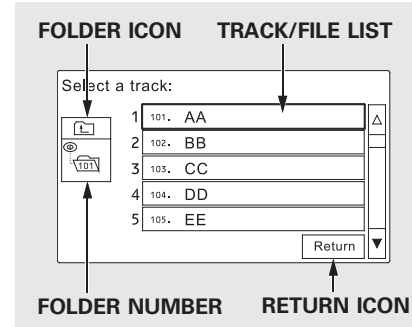

You can also select a track/file directly from the folder and file lists on the audio display. Press the AUDIO button to show the audio display.

CONTINUED

Playing a Disc (Models with navigation system)

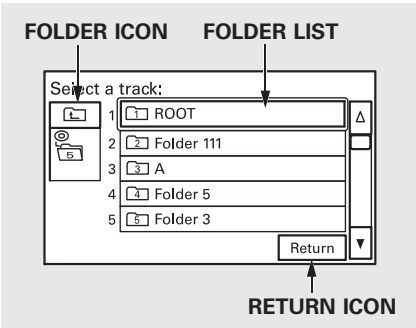

Touch the Track List icon to switch the display to the folder list, then select and touch a desired folder.

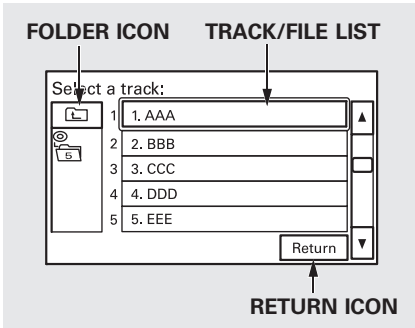

The display changes to the file list. Then, select and touch a desired file.

Touch the folder icon on the upper left of the screen to move to the parent folder.

To scroll through the display, touch the ▲ or ▼ icon on the side of the screen. To go back to the previous display, touch the Return icon.

To select a desired icon with the joystick, move it in the appropriate direction, then press ENT.

Press the AUDIO button to go back to the normal audio playing display. Pressing the CANCEL button goes back to the previous screen, and pressing the MAP button cancels the audio control display on the screen.

When playing a CD recorded with text data, each track name is shown on the audio display. With a disc recorded in MP3 or WMA, the folder number is also displayed.

If the disc was not recorded with text data, only the track number is shown.

To Stop Playing a Disc
To play the radio when a disc is playing, press the AM/FM button or touch the FM1, FM2, AM, XM1, or XM2 icon. If a PC card is in the audio unit, touch the CARD icon to play the PC card. Press the CD/XM button again or touch the CD icon to switch back to the disc player.

To play an audio unit connected to the auxiliary input jack or the USB adapter cable when a disc is playing, touch the AUX icon.

If you turn the system off while a disc is playing, either with the power/volume knob or by turning off the ignition switch, the disc will stay in the drive. When you turn the system back on, the disc will begin playing where it left off.

Removing a Disc
To remove a disc from the audio unit, fold back the screen by pressing the OPEN button (see page 142). Press the disc eject button (⏏) to remove the disc. If you eject the disc, but do not remove it from the slot, the system will automatically reload it after 10 seconds and put it in pause mode. To begin playing, press the CD/XM button.

To return the screen to the upright position, press the CLOSE button.

You cannot close the screen if a disc is partially inserted into its slot.

You can also eject the disc when the ignition switch is off.

Protecting Discs
For information on how to handle and protect discs, see page 183.

Disc Player Error Messages (Models with navigation system)

The chart on the right explains the error messages you may see in the display while playing a disc.

If you see an error message in the display while playing a disc, press the eject button. After ejecting the disc, check it for damage or deformation. If there is no damage, insert the disc again.
For additional information on damaged discs, see page 184.

If there is still a problem, the error message will appear again. Press the eject button, and pull out the disc.

Insert a different disc. If the new disc plays, there is a problem with the first disc. If the error message cycle repeats and you cannot clear it, take your vehicle to a dealer.

Error Message	Cause	Solution
CD DISC ERROR	FOCUS Error	Press the eject button, and pull out the disc. Check if it is inserted correctly in the disc player. Make sure the disc is not scratched or damaged (see page 184).
CD MECH ERROR	Mechanical Error	Press the eject button, and pull out the disc. Check the disc for damage or deformation (see page 184). If the disc cannot be pulled out, or the error message does not disappear after the disc is ejected, see your dealer.
CD DISC	TOC Error	Press the eject button, and pull out the disc. Check the disc for damage or deformation (see page 184).
CD HEAT ERROR	High Temperature	Will disappear when the temperature returns to normal.

Playing a PC Card (Models with navigation system)

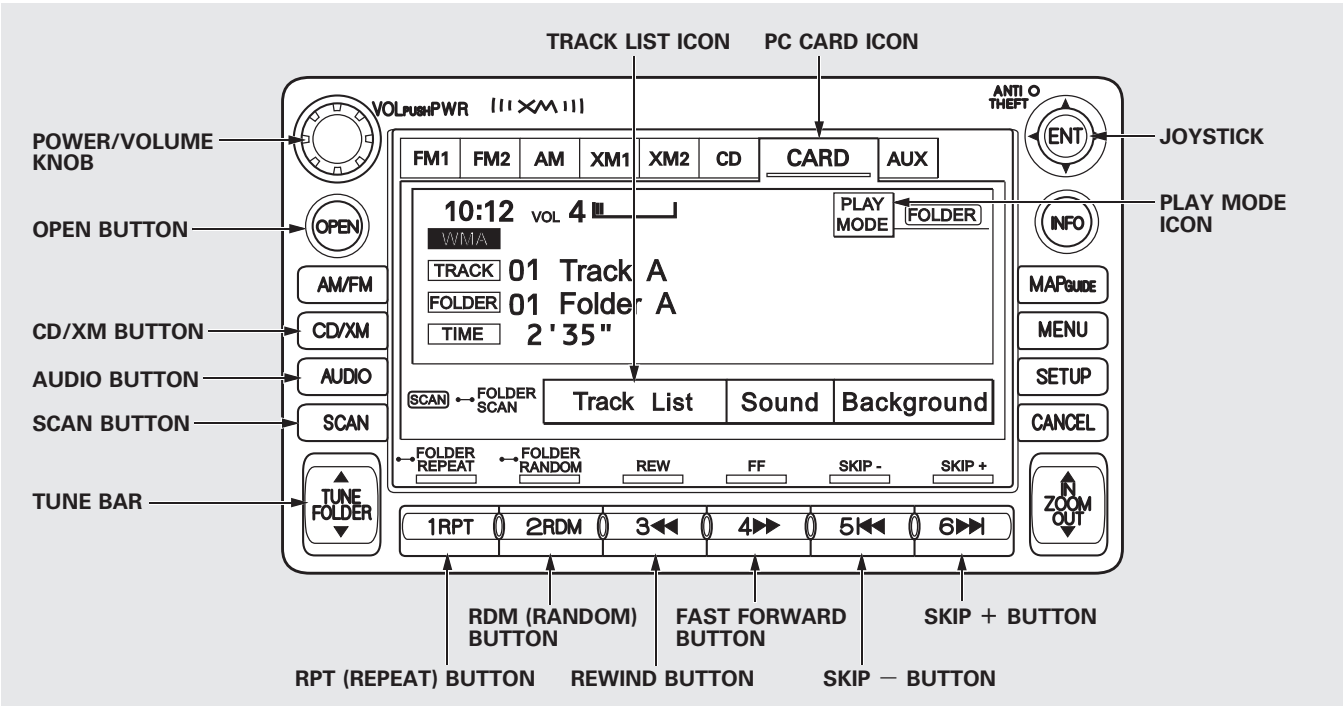

CONTINUED

Playing a PC Card (Models with navigation system)

To Play a PC Card
You operate the PC card player with the same controls used for the radio and the disc player. To load or play a card, the ignition switch must be in the ACCESSORY (I) or ON (II) position.

The PC card player reads and plays cards in MP3 or WMA formats. Depending on the format, the screen will indicate “MP3” or “WMA” when a card is playing. The card limit of the player is 99 folders and 999 tracks. If the card has a complex structure, it takes some time for the system to begin playing it.

Based on PCMCIA 2.1/JEIDA 4.2, the recommended PC cards for the PC card reader are:

CompactFlash
Flash ATA
SD memory card

Always use the recommended memory card with the appropriate adapter (if an adapter is needed). Some memory cards will not work in this unit.

NOTE:

- When you insert a PC card into the slot, make sure you put it in straight. If you cannot insert it, remove it, and insert again.
- Do not keep PC cards in the vehicle. Direct sunlight and high heat will damage them.
- To avoid damaging the card reader, do not insert hard disc drive cards into the PC card slot.
- You cannot close the screen (move it to the upright position) until the PC card is inserted all the way into its slot or removed.
- Never insert foreign objects into the PC card slot.

The specifications for compatible MP3 files are:

– Sampling frequency:
32/44.1/48 kHz (MPEG1)
16/22.05/24 kHz (MPEG2)

– Bitrate:
32/40/48/56/64/80/96/112/128/160/192/224/256/320 kbps (MPEG1)
8/16/24/32/40/48/56/64/80/96/112/128/160 kbps (MPEG2)

– Compatible with variable bitrate and multi-session

– Maximum layers (including ROOT): 8 layers

The specifications for compatible WMA files are:

- Sampling frequency: 32/44.1/48 kHz
- Bitrate: 48/64/80/96/128/160/192 kbps
- Compatible with variable bitrate and multi-session
- Maximum layers (including ROOT): 8 layers

In WMA format, DRM (digital rights management) files cannot be played. If the system finds a DRM file, it skips that file and plays the next available folder or file.

Loading a PC Card

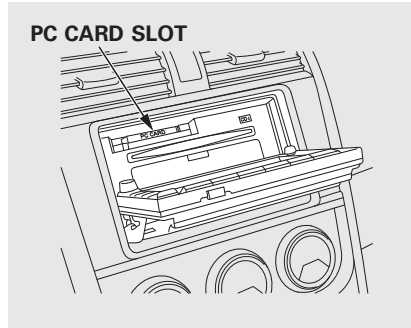

The PC card slot is behind the navigation screen. To use the PC card player, press the OPEN button beside the screen. The screen folds back, and the PC card slot appears.

Insert a PC card straight into the slot. The drive will read the PC card and begin to play it.

Return the screen to the upright position by pressing the CLOSE button on the edge of the screen panel.

Push the AUDIO button beside the screen to show the audio display and operate the PC card player.

You can also operate the audio system without using the control icons on the audio screen. Press any of the appropriate control buttons. The status bar appears on the bottom of the screen. On the navigation screen, you can see the audio information whenever you touch the AUDIO INFO icon on the screen.

CONTINUED

Playing a PC Card (Models with navigation system)

There are three play modes: Folder, Artist, and Album. Touch the PLAY MODE icon, then choose one of the modes by touching its icon. When a mode is selected, it is highlighted in blue.

- Folder mode plays tracks in the order they were added to the card.
- Artist mode plays tracks in alphabetical order, by artist and song title.
- Album mode plays albums (folders) in alphabetical order.

If play mode information was not included in the tracks when they were added to the card, it will not be displayed on the screen.

To Select a Play Mode

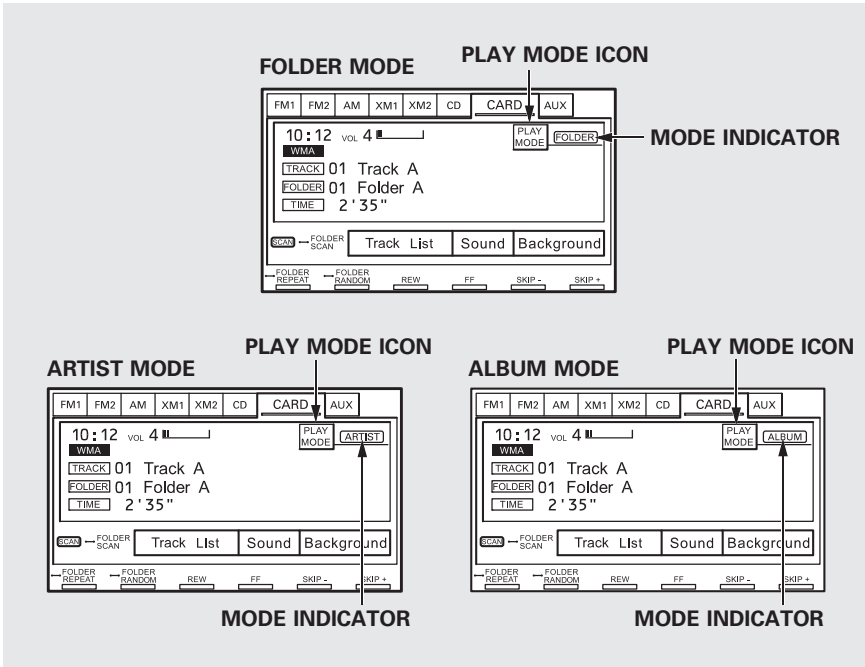

Playing a PC Card (Models with navigation system)

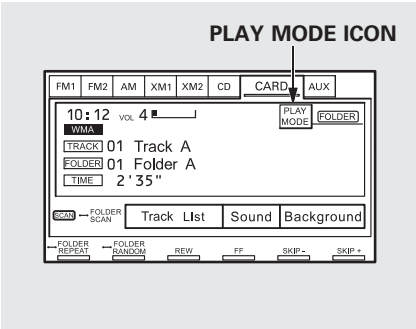

To select a play mode, push the AUDIO button to show the audio display, then touch the PLAY MODE icon on the display.

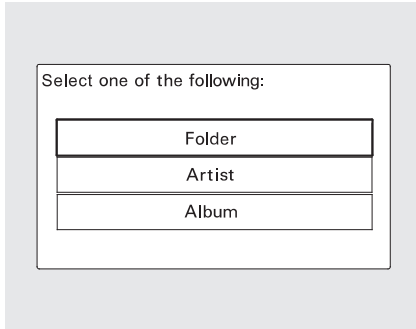

Select the desired mode by touching the appropriate icon, or move the joystick, then press the ENT.

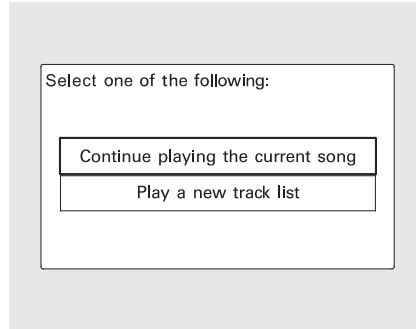

After you select the play mode, the display changes to the selectable playing menu. If you select “Continue playing the current song,” the system goes into the selected play mode after playing the current file.

CONTINUED

Playing a PC Card (Models with navigation system)

If you select “Play a new track list,” the system goes into the selected play mode immediately and begins to play the files in order to the new list.

To go back to the previous screen, press the CANCEL button on the right side of the screen. To exit the play mode screens, press the AUDIO button.

To Change or Select Tracks/Files

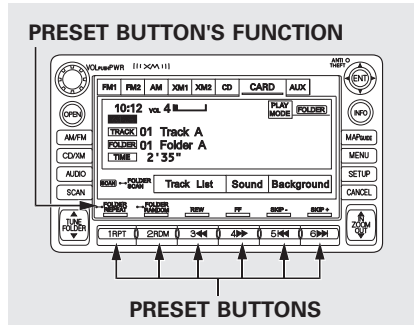

You can use the preset buttons while a card is playing to select or change files. Each preset button's function is shown on the bottom of the screen.

Icons on the screen can also be selected with the joystick. Move the joystick left or right and up or down until the icon is highlighted, then press the ENT on the top of the joystick to select the icon.

SKIP – Each time you press and release ►►I (preset 6), the player skips forward to the beginning of the next file. Press and release I◄◄ (preset 5), to skip backward to the beginning of the current file. Press it again to skip to the beginning of the previous file.

FF/REW – To move rapidly within a file, press and hold ►► (preset 4) or ◄◄ (preset 3).

FOLDER SELECTION – To select a different folder, press either side of the TUNE bar to move to the beginning of the next folder. Press the ▲ side of the TUNE bar to skip to the next folder, and the ▼ side to move to the beginning of the previous folder.

TRACK REPEAT (FILE REPEAT) – To continuously replay a file, press and release the RPT button (preset 1). You will see TRACK REPEAT in the display. Press the RPT button again to turn it off.

FOLDER/ARTIST/ALBUM REPEAT – This feature, when activated, replays all the files in the selected folder/artist/album in the order they are recorded or listed. To activate each repeat mode, press and hold the RPT button (preset 1) for 2 seconds. You will see FOLDER REPEAT, ARTIST REPEAT or ALBUM REPEAT in the display. The system continuously replays the current folder/artist/album. Press and hold the RPT button for 2 seconds again to turn it off. Pressing the RDM button, or selecting a different folder/artist/album with the TUNE bar also turns off the repeat feature.

TRACK RANDOM (Random within a folder) – This feature plays the files within a folder in random order. To activate track random, press and release the RDM button (preset 2). You will see TRACK RANDOM in the display. Press the RDM button again to return to normal play.

FOLDER/ARTIST/ALBUM RANDOM – This feature, when activated, plays all files in each folder/artist/album in random order, rather than in the order they are recorded or listed. To activate each random play, press and hold the RDM button (preset 2) for 2 seconds. You will see FOLDER RANDOM, ARTIST RANDOM or ALBUM RANDOM in the display.

The system then selects and plays files randomly. This continues until you deactivate each random play by pressing the RDM button again, or you select a different folder with the TUNE bar (in FOLDER RANDOM mode).

SCAN – The scan function samples all files on the PC card in the order they are recorded. To activate scan, press and release the SCAN button. You will see TRACK SCAN in the display. You will get a 10 second sampling of each file on the PC card. Press the SCAN button again to get out of scan mode and play the last file sampled.

Pressing either of the SKIP buttons (preset 5 or 6) also turns off the scan feature.

CONTINUED

Playing a PC Card (Models with navigation system)

FOLDER/ARTIST/ALBUM SCAN – This feature, when activated, samples the first file in each folder/artist/album on the PC card in order. To activate each scan feature, press and hold the SCAN button until you hear a beep. You will see FOLDER SCAN, ARTIST SCAN or ALBUM SCAN in the display.

The system plays the first file in the folder for about 10 seconds. If you do nothing, the system plays the first file in each folder, in order, for 10 seconds each. After playing the first file of the last folder/artist/album, the system returns to normal play.

Pressing either of the SKIP buttons (preset 5 or 6), selecting a different folder with the TUNE bar (in FOLDER RANDOM mode), or pressing the SCAN button, also turns off the scan feature.

Using a Track List

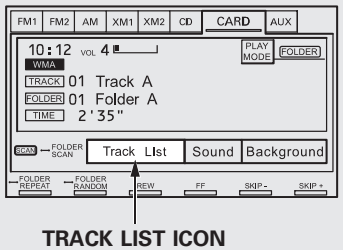

You can also select a file directly from a track list on the audio display. Press the AUDIO button to show the audio display, then touch the Track List icon. The track list menu appears on the display.

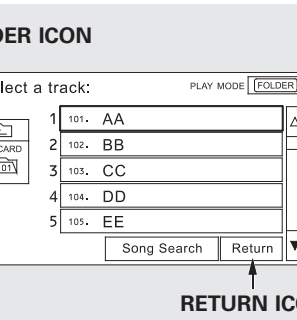

To scroll through the display, touch the ▲ or ▼ icon on the side of the screen. To go back to the previous display, touch the Return icon.

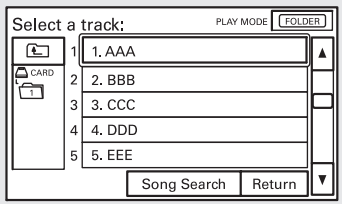

To select a folder, touch its icon on the screen. The display changes to the file list, then select a file. In folder mode, touch the folder icon on the upper left of the screen to move to the parent folder. The current folder is highlighted in blue.

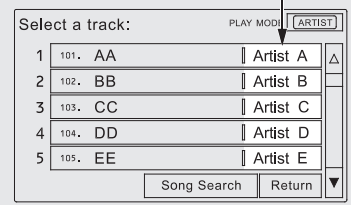

In artist mode, the artist name is also displayed on the right side of each selectable icon. Select the desired file.

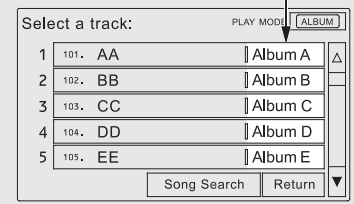

In album mode, the album name is also displayed on the right side of each selectable icon. Select the desired file.

To select a desired icon with the joystick, move it to an appropriate direction, then press ENT.

CONTINUED

Playing a PC Card (Models with navigation system)

To go back to the normal playing display, press the AUDIO button. Pressing the CANCEL button goes back to the previous screen and pressing the MAP button cancels the audio mode display.

Song Search Function

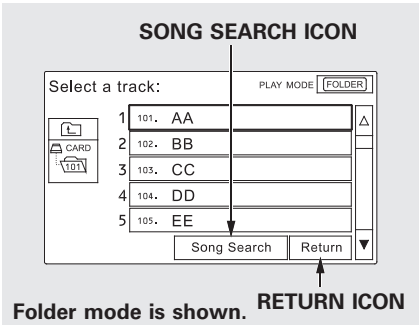

Folder mode is shown.

When you select “Song Search” from the track list display, the song search menu appears.

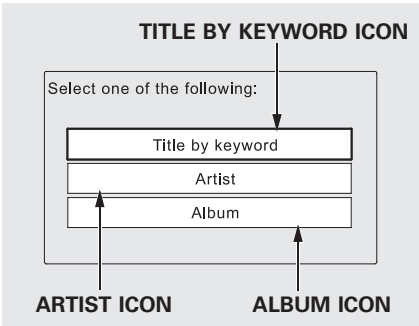

You can then select any of three modes to search a file: Title by Keyword, Artist, and Album.

Searching for a Song Title by Keyword

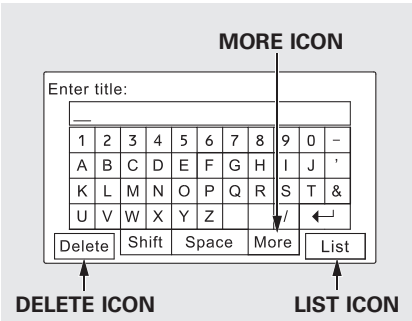

In Title by Keyword mode, enter the title name, or any keyword, by touching the letter icons on the screen. Press the List icon to begin the song search. If you press the CANCEL button on the screen, the display returns to the mode menu without doing a search.

To cancel the selected letter, select the letter and touch the Delete icon. To select more characters, touch the More icon. The other character list will be shown.

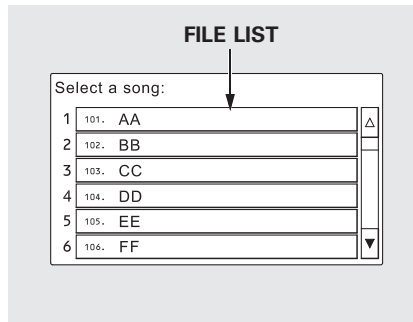

After the system searches for a song, a file list is displayed. To scroll through the list, touch the ▲ or ▼ icon on the side of the screen. Select the desired file by touching the appropriate icon, or moving the joystick and pressing the ENT.

Searching for a Song by Artist Name

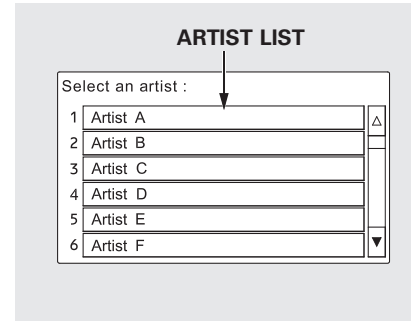

Select the Artist icon, and the artist list appears. Select the desired artist, and the artist's file list is displayed.

CONTINUED

Playing a PC Card (Models with navigation system)

Searching for a Song by Album Name

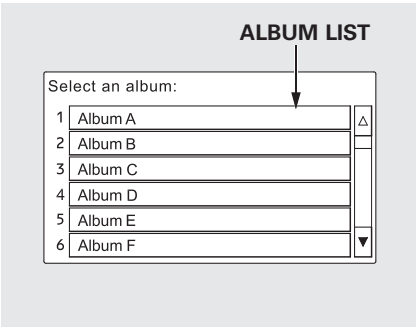

Select the Album icon, and the album list appears. Select the desired album, and its song list is displayed. You can then select the desired song from the list.

To Stop Playing a PC Card

To play the radio when a PC card is playing, press the AM/FM button or touch the FM1, FM2, AM, XM1, or XM2 icon. If a disc is in the audio unit, press the CD/XM button or touch the CD icon to play the disc. Touch the CARD icon to switch back to the PC card player.

To play an audio unit connected to the auxiliary input jack or the USB adapter cable when a PC card is playing, touch the AUX icon.

If you turn the system off while a PC card is playing, either with the power/volume knob or by turning off the ignition switch, the card will stay in the drive. When you turn the system back on, the card will begin playing where it left off.

When you leave the vehicle, always remove the PC card from the audio unit.

Removing a PC Card

To remove a PC card from the audio unit, fold back the screen by pressing the OPEN button (see page 151). Press the eject button (⏏) to remove the card. If you do not remove it from the slot, you cannot return the screen to the upright position.

To return the screen to the upright position, press the CLOSE button.

You can also eject a card when the ignition switch is off.

PC Card Error Messages (Models with navigation system)

If you see an error message in the display while playing a PC card, find the solution in the chart to the right. If you cannot clear the error message, take your vehicle to your dealer.

Error Message	Solution
FILE ERROR	The system cannot read the file(s). Check the files in the disc. There is a possibility that the files have been damaged
NO MUSIC	It appears when the PC card is empty or there are no MP3 or WMA files in the PC card. Save the MP3 or WMA files in the PC card.
MEDIA ERROR	It appears when an unsupported PC card is inserted. The system supports CompactFlash card, Flash ATA card, and SanDisk memory Card Adapter.

Playing an iPod® (Models with navigation system)

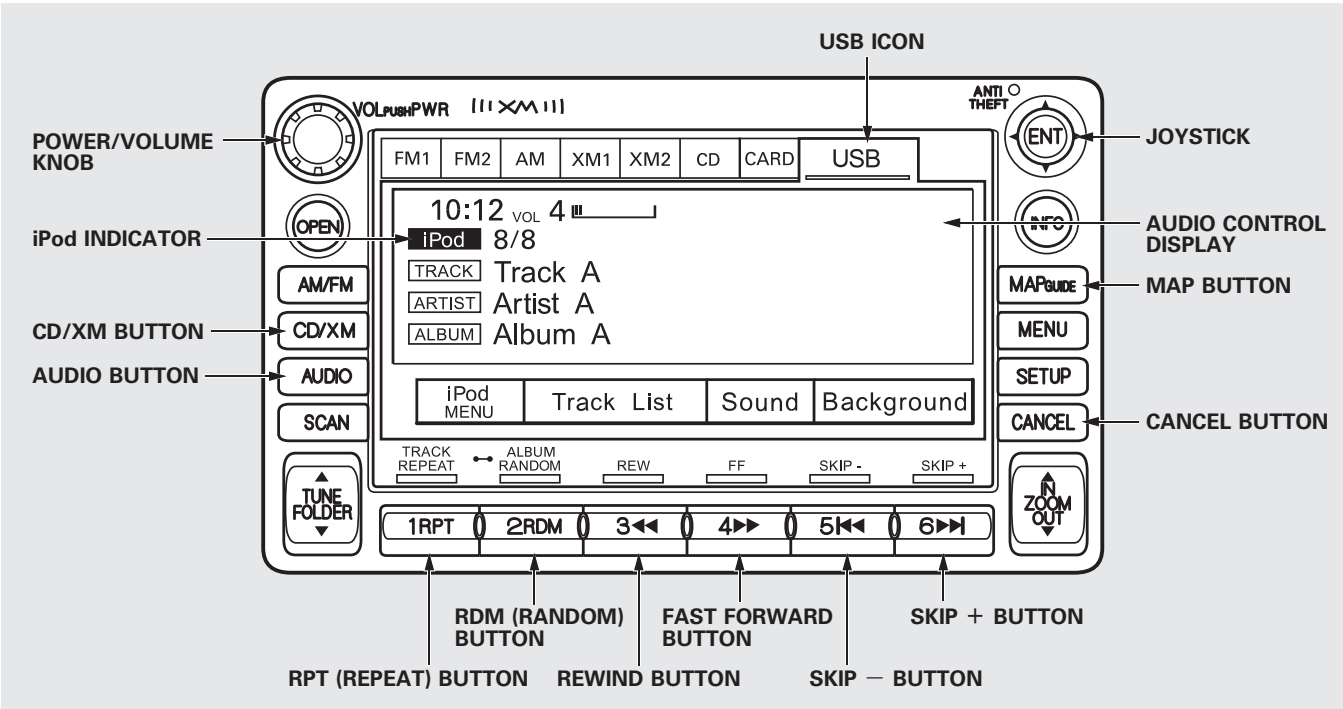

To Play an iPod®

This audio system can select and play the audio files on the iPod® with the same controls used for the in-dash disc player. To play an iPod, connect it to the USB adapter cable in the glove box by using your dock connector. Press the AUDIO button beside the screen to show the audio display and touch the AUX icon. The ignition switch must be in the ACCESSORY (I) or ON (II) position. The iPod will also be recharged with the ignition switch in these positions.

You can also select an icon by moving the joystick. Move it to left, right, up, or down to change the highlighting and scroll through lists, then press ENT on the top of the joystick to set your selection.

To select the USB mode without using the icon, press the CD/XM button repeatedly. The status bar appears on the bottom of the screen.

The audio system reads and plays sound files to be playable on the iPod. The system cannot operate an iPod as a mass storage device. The system will only play songs stored on the iPod with iTunes.

iPod and iTunes are registered trademarks owned by Apple Inc.

Voice Control System

You can select the AUX mode by using the navigation system voice control buttons, but cannot operate the play mode functions.

iPods compatible with your audio system using the USB adapter cable are:

Model	Software
iPod classic	Ver. 1.0 or more
iPod with video (iPod 5th generation)	Ver. 1.2 or more
iPod nano	Ver. 1.2 or more
iPod nano 2nd generation	Ver. 1.1.2 or more
iPod nano 3rd generation	Ver. 1.0 or more
iPod nano 4th generation	Ver. 1.0.2 or more
iPod touch	Ver. 1.1.1 or more
iPod touch 2nd generation	Ver. 2.1.1 or more

CONTINUED

Playing an iPod® (Models with navigation system)

Use only compatible iPods with the latest software. iPods that are not compatible will not work in this audio unit.

NOTE:

- Do not connect your iPod using a HUB.
- Do not keep the iPod in the vehicle. Direct sunlight and high heat will damage it.
- Do not use an extension cable between the USB adapter cable equipped with your vehicle and your dock connector.
- We recommend backing up your data before playing it.
- Some devices cannot be powered or charged via the USB adapter. If this is the case, use the accessory adapter to supply power to your device.

In AAC format, DRM (digital rights management) files cannot be played. If the system finds a DRM file, the audio unit displays UNPLAYABLE, and then skips to the next file.

Connecting an iPod

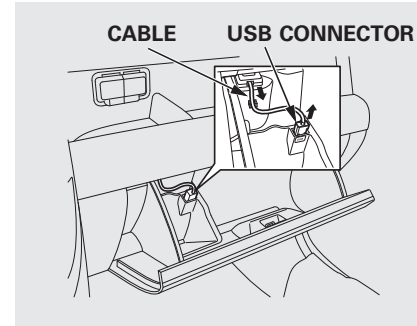

1. Pull out the USB connector from the holder and remove the cable from the clip in the glove box.

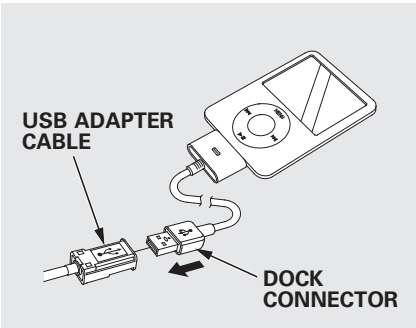

2. Connect your dock connector to the iPod correctly and securely.
3. Install the dock connector to the USB adapter cable securely.

If the iPod indicator does not appear in the audio display, check the connections, and try to reconnect the iPod a few times.

If the audio system still does not recognize the iPod, the iPod may need to be reset. Follow the instructions that came with your iPod, or you can find reset instructions online at *www.apple.com/ipod*.

When the iPod is connected and the audio display is selected on the screen by pressing the AUDIO button, the AUX icon switches to the USB icon. The display also shows the current file number and total of the selected playable files, the artist, album and track (file) names on the navigation screen.

CONTINUED

Playing an iPod® (Models with navigation system)

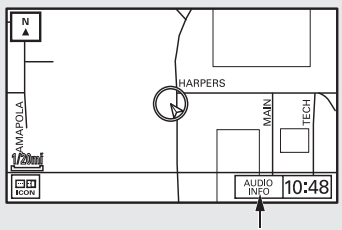

On the map screen, you can see the audio information whenever you touch the AUDIO INFO icon on the lower part of the screen.

To Change or Select Files

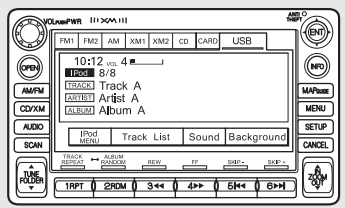

Use the preset buttons while an iPod is playing to select passages and change files. Each preset button's function is shown on the bottom of the screen.

SKIP – Each time you press and release ►►I (preset 6), the player skips forward to the beginning of the next file. Press and release I◄◄ (preset 5), to skip backward to the beginning of the current file. Press it again to skip to the beginning of the previous file.

FF/REW – To move rapidly within a file, press and hold ►► (preset 4) or ◄◄ (preset 3).

Using a Track List

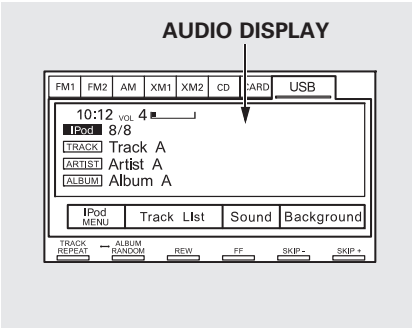

You can also select a file directly from a track list on the audio display. Press the AUDIO button to show the audio display, then touch the Track List icon. The track list menu appears on the display.

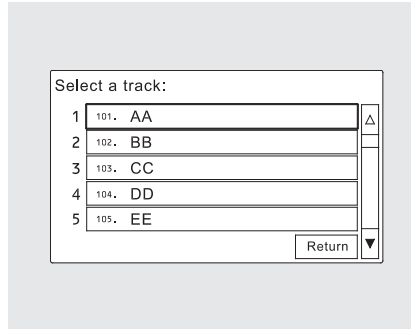

To scroll through the display, touch the ▲ or ▼ icon on the side of the screen. To go back to the previous display, touch the Return icon.

To select a desired icon with the joystick, move it in the appropriate direction, then press ENT.

To Select a File from iPod Menu

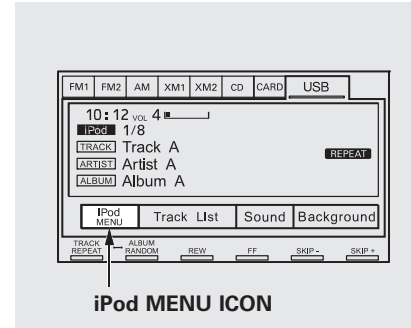

You can also select a file from the iPod menu: playlists, artists, albums and songs. Press the AUDIO button to display the audio display on the navigation screen. Touch the iPod MENU icon to display the iPod menu.

CONTINUED

Playing an iPod® (Models with navigation system)

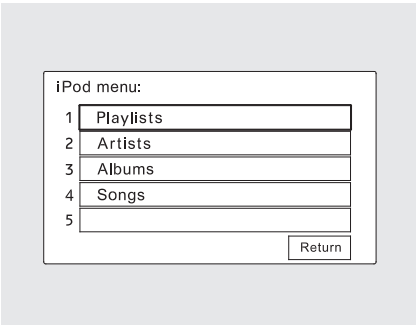

Select a desired list by touching the appropriate icon.

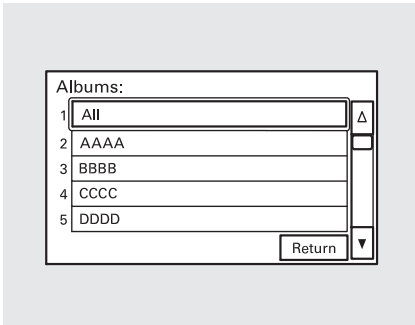

The display shows the items on that list. Touch a desired file.

To scroll through the display, touch the ▲ or ▼ icon on the side of the screen. To go back to the previous display, touch the Return icon.

To select a desired icon with the joystick, move it in the appropriate direction, then press ENT.

If you select “ALL” on either the artists or albums list, all available files on the selected list are played.

Press the AUDIO button to go back to the normal audio playing display. Pressing the CANCEL button goes back to the previous screen, and pressing the MAP button cancels the audio display on the screen.

To Select Repeat or Random Mode:
You can select any type of repeat and random modes with the RPT and RDM buttons. To confirm the selected mode, press the AUDIO button to show the audio display on the navigation screen.

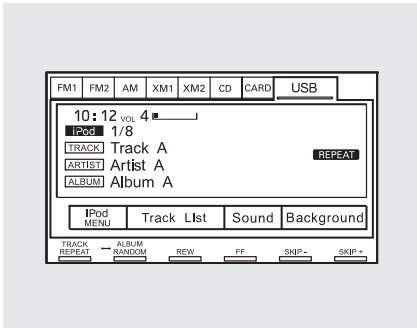

TRACK REPEAT – This feature continuously plays a track/file. To activate track repeat, press and release the RPT button (preset 1). You will see REPEAT in the display. To turn it off, press and release the RPT button again.

Each time you press and release the RPT button, the mode changes between track repeat and normal play.

Pressing either SKIP button changes the file while keeping this feature.

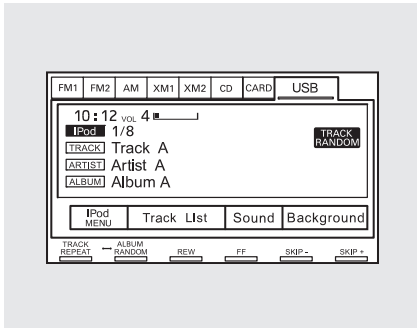

TRACK RANDOM – This feature plays all available tracks/files from the selected items in the iPod menu list (playlists, artists, albums or songs) in random order. To activate track random, press and release the RDM button (preset 2). You will see TRACK RANDOM on the screen.

CONTINUED

Playing an iPod® (Models with navigation system)

ALBUM RANDOM – This feature plays all available albums from the selected item in the iPod menu list (playlists, artists, albums or songs) in random order. The tracks/files in each album are played in the recorded order. To activate album random, press and release the RDM button (preset 2) repeatedly until you see ALBUM RANDOM on the screen.

Press and hold the button until you hear a beep to turn off either random mode.

You can also select another list from the iPod menu while keeping the random function.

NOTE:
Available operating functions vary on models or versions. Some functions may not be available on the vehicle's audio system.

To Stop Playing Your iPod
To play the radio when an iPod is playing, press the AM/FM button or touch the FM1, FM2, AM, XM1, or XM2 icon. If a disc is in the audio unit, press the CD/XM button or touch the CD icon to play the disc. If a PC card is in the audio unit, Press the CD/XM button or touch the CARD icon to play a PC card.

Press the CD/XM button again or touch the AUX icon to switch back to the iPod.

Disconnecting an iPod
You can disconnect the iPod at any time when you see the “OK to disconnect” message* in the iPod display. Always make sure you see the “OK to disconnect” message in the iPod display before you disconnect it. Make sure to follow the iPod's instructions on how to disconnect the dock connector from the USB adapter cable.

*: The displayed message may vary on models or versions. On some models, there is no message to disconnect.

When you disconnect the iPod while it is playing, the audio screen (if selected) shows NO DATA.

If you reconnect the same iPod, the system may begin playing where it left off, depending on what mode the iPod is in when it is reconnected.

iPod Error Messages
If you see an error message in the screen, see page 172.

iPod® Error Messages (Models with navigation system)

If you see an error message on the screen while playing an iPod, find the solution in the chart to the right. If you cannot clear the error message, take your vehicle to your dealer.

Error Message	Solution
UNSUPPORTED	Appears when an unsupported iPod is inserted.
NO SONG	There is no music information.

Playing a USB Flash Memory Device (Models with navigation system)

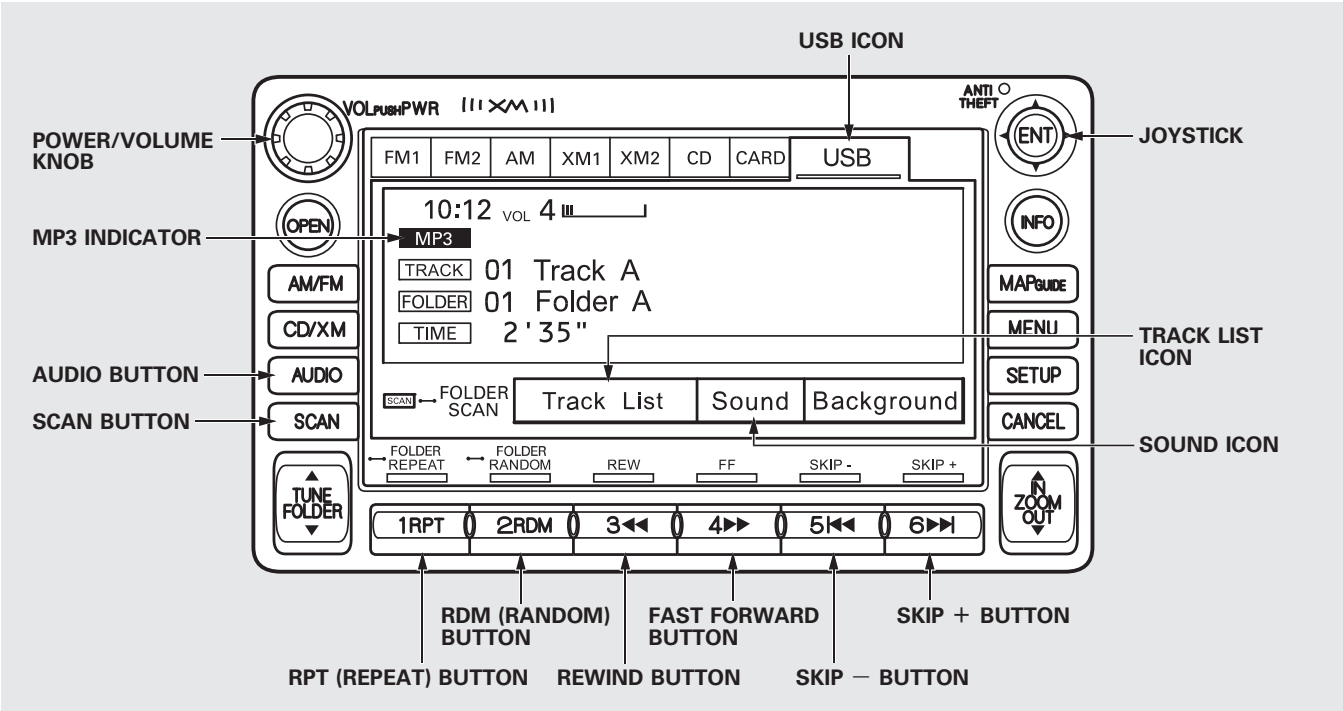

CONTINUED

Playing a USB Flash Memory Device (Models with navigation system)

To Play a USB Flash Memory Device

This audio system can select and play the audio files from a USB flash memory device with the same controls used for the in-dash disc player. To play a USB flash memory device, connect it to the USB adapter cable in the glove box. The ignition switch must be in the ACCESSORY (I) or ON (II) position. Press the AUDIO button beside the screen to show the audio display and touch the AUX icon.

You can also select an icon by moving the joystick. Move it to left, right, up, or down to change the highlighting and scroll through lists, then press ENT on the top of the joystick to set your selection.

To select the USB mode without using the icon, press the CD/XM button repeatedly. The status bar appears on the bottom of the screen.

The audio system reads and plays the audio files on the USB flash memory device in MP3, WMA or AAC* formats. Depending on the format, the display shows MP3, WMA or AAC when a USB flash memory device is playing. The USB flash memory device limit is up to 700 folders or up to 65535 files.

*: Only AAC format files recorded with iTunes are playable on this audio unit.

The recommended USB flash memory devices are 256 MB or higher and formatted with the FAT file system. Some digital audio players may be compatible as well.

Some USB flash memory devices (such as devices with security lock-out features, etc.) will not work in this audio unit.

NOTE:

- Do not use a device such as a card reader or hard drive as the device or your files may be damaged.
- Do not connect your USB flash memory device using a HUB.
- Do not use an extension cable to the USB adapter cable equipped with your vehicle.
- Do not keep the USB flash memory device in the vehicle. Direct sunlight and high heat will damage it.
- We recommend backing up your data before playing a USB flash memory device.
- Some devices cannot be powered or charged via the USB adapter. If this is the case, use the accessory adapter to supply power to your device.
- Depending on the type and number of files, it may take some time before they begin to play.
- Depending on the software the files were made with, it may not be possible to play some files, or display some text data.

Voice Control System

You can select the AUX mode by using the navigation system voice control buttons, but cannot operate the play mode functions.

The specifications for compatible MP3 files are:

– Sampling frequency:
32/44.1/48 kHz (MPEG1)
16/22.05/24 kHz (MPEG2)

– Bitrate:
32/40/48/56/64/80/96/112/128/160/192/224/256/320/VBR kbps (MPEG1)

– Supported standards:
MPEG1 Audio Layer3
MPEG2 Audio Layer3

– Partition: Top partition only

– Maximum layers: 8

CONTINUED

Playing a USB Flash Memory Device (Models with navigation system)

The specifications for compatible WMA files are:

- Sampling frequency: 32/44.1/48 kHz
- Bitrate: 48 – 320/VBR kbps (Max 384)
- Supported standards: WMA version 7/8/9
- Partition: Top partition only
- Maximum layers: 8

The specifications for compatible AAC files are:

- Sampling frequency: 8/11.025/12/16/22.05/24/32/44.1/48 kHz
- Bitrate: 48 – 320 kbps
- Supported standards: MPEG4/AAC LC MPEG2/AAC LC
- Partition: Top partition only
- Maximum layers: 8

Even if recorded in MP3, WMA or AAC format, a file with an unsupported version cannot be played. If the system finds an unsupported file, the screen displays UNSUPPORTED, and then skips to the next file.

In WMA or AAC format, DRM (digital rights management) files cannot be played. If the system finds a DRM file, the screen displays UNPLAYABLE FILE, and then skips to the next file.

Playing a USB Flash Memory Device (Models with navigation system)

Connecting a USB Flash Memory Device

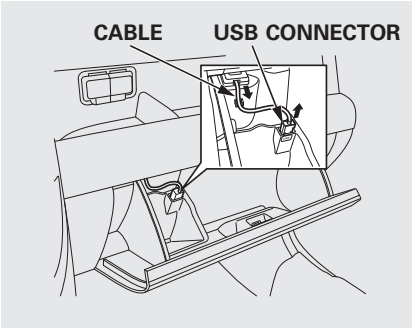

1. Pull out the USB connector from the holder and remove the cable from the clip in the glove box.

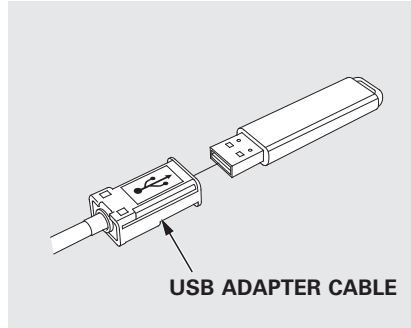

2. Connect the USB flash memory device to the USB adapter cable correctly and securely.

When the USB device is connected and the audio display is selected on the screen by pressing the AUDIO button, the AUX icon switches to the USB icon. The display also shows the folder and file numbers, and the elapsed time.

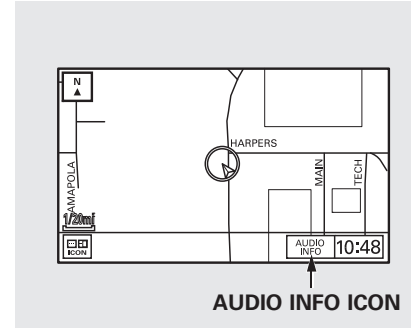

On the map screen, you can see the audio information whenever you touch the AUDIO INFO icon on the lower part of the screen.

CONTINUED

Playing a USB Flash Memory Device (Models with navigation system)

To Change or Select Files

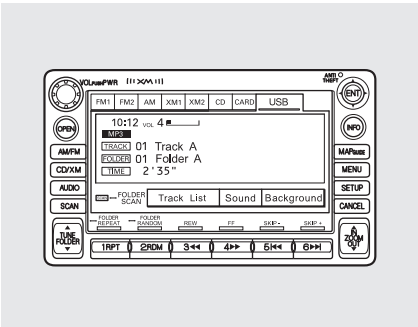

Use the preset buttons while a USB flash memory device is playing to select passages and change files. Each preset button's function is shown on the bottom of the screen.

SKIP – Each time you press and release ►►I (preset 6), the system skips forward to the beginning of the next file. Press and release I◄◄ (preset 5) to skip backward to the beginning of the current file. Press it again to skip to the beginning of the previous file.

FF/REW – To move rapidly within a file, press and hold ►► (preset 4) or ◄◄ (preset 3).

FOLDER SELECTION – To select a different folder, press and release either side of the TUNE bar. Press the ▲ side to skip to the next folder, and press the ▼ side to skip to the beginning of the previous folder.

To Select a File from Folder and File Lists

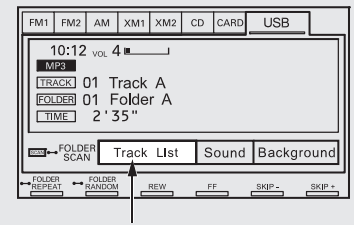

TRACK LIST ICON

You can also select a folder and file from the lists shown on the screen. Press the AUDIO button to show the audio display on the navigation screen.

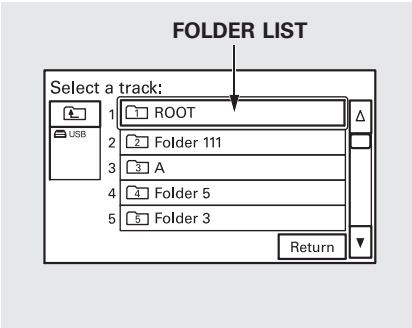

Touch the Track List icon to switch the display to the folder list, then select and touch a desired folder.

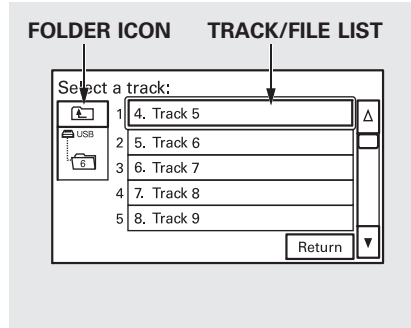

The display changes to the file list. Then, select and touch a desired file.

Touch the folder icon on the upper left of the screen to move to the parent folder.

To scroll through the display, touch the ▲ or ▼ icon on the side of the screen. To go back to the previous display, touch the Return icon.

To select a desired icon with the joystick, move it in the appropriate direction, then press ENT.

Press the AUDIO button to go back to the normal audio playing display. Pressing the CANCEL button goes back to the previous screen, and pressing the MAP button cancels the audio display on the screen.

CONTINUED

Playing a USB Flash Memory Device (Models with navigation system)

To Select Repeat, Random or Scan Mode:
You can select any type of repeat, random and scan modes with the RPT, RDM and SCAN buttons. To confirm the selected mode, press the AUDIO button to show the audio display on the navigation screen.

TRACK REPEAT – This feature continuously plays a track/file. To activate track repeat, press and release the RPT button (preset 1). You will see TRACK REPEAT in the display.

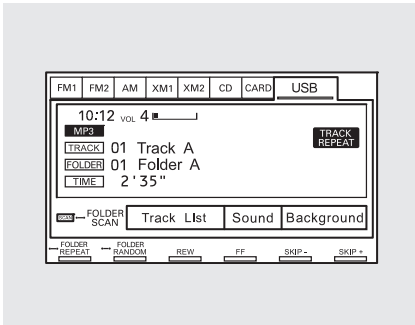

FOLDER REPEAT – This feature replays all the tracks/files in the selected folder in the order they are stored. To activate folder repeat, press and hold the RPT button (preset 1) until you see FOLDER REPEAT in the display.

Press and release the button to turn off either repeat mode. Pressing either side of the TUNE bar also turns off this feature.

TRACK RANDOM – This feature plays all the tracks/files in random order. To activate track random, press and release the RDM button (preset 2). You will see TRACK RANDOM in the display.

FOLDER RANDOM – This feature plays the tracks/files in the selected folder in random order. To activate folder random, press and hold the RDM button (preset 2) until you see FOLDER RANDOM in the display.

Press and release the button to turn off either random mode.

TRACK SCAN – This feature samples all tracks/files in the selected folder in the order they are stored. To activate track scan, press and release the SCAN button. You will see TRACK SCAN in the display. You will get a 10 second sampling of each track/file in the folder.

FOLDER-SCAN – This feature samples the first track/file in each folder in the order they are stored. To activate folder scan, press and hold the SCAN button. You will see FOLDER SCAN in the display. You will get a 10 second sampling of each first track/file in the folder(s).

Press and release the button to turn off either scan mode. Pressing either SKIP button also turns off this feature.

To Stop Playing a USB Flash Memory Device

To play the radio when an USB flash memory device is playing, press the AM/FM button or touch the FM1, FM2, AM, XM1, or XM2 icon. If a disc is in the audio unit, press the CD/XM button or touch the CD icon to play the disc. If a PC card is in the audio unit, Press the CD/XM button or touch the CARD icon to play a PC card.

Press the CD/XM button again or touch the AUX icon to switch back to the USB flash memory device.

Disconnecting a USB Flash Memory Device

You can disconnect the USB flash memory device at any time even if the USB mode is selected on the audio system. Make sure to follow the USB flash memory device's instructions when you remove it.

When you disconnect the USB flash memory device while it is playing, the audio display (if selected) shows NO DATA.

If you reconnect the same USB flash memory device, the system will begin playing where it left off.

USB Flash Memory Device Error Messages

If you see an error message in the screen, see page 182.

USB Flash Memory Device Error Messages (Models with navigation system)

If you see an error message on the screen while playing a USB flash memory device, find the solution in the chart to the right. If you cannot clear the error message, take your vehicle to your dealer.

Error Message	Solution
UNPLAYABLE FILE	The system cannot read the file(s). Check the files in the USB flash memory device. There is a possibility that the files have been damaged.
UNSUPPORTED	Appears when an unsupported USB flash memory device is inserted.
NO SONG	There is no music information.

General Information

- When using CD-R or CD-RW discs, use only high quality CDs labeled for audio use.
- When recording a CD-R or CD-RW, the recording must be closed for it to be used by the system.
- Play only standard round discs. Odd-shaped discs may jam in the drive or cause other problems.
- Handle your discs properly to prevent damage and skipping.

NOTICE

Do not use discs with adhesive labels. The label can curl up and cause the disc to jam in the unit.

Protecting Discs

When a disc is not being played, store it in its case to protect it from dust and other contamination. To prevent warpage, keep discs out of direct sunlight and extreme heat.

To clean a disc, use a clean soft cloth. Wipe across the disc from the center to the outside edge.

A new disc may be rough on the inner and outer edges. The small plastic pieces causing this roughness can flake off and fall on the recorded surface of the disc, causing skipping or other problems. Remove these pieces by rubbing the inner and outer edges with the side of a pencil or pen.

Never try to insert foreign objects in the CD player or the magazine.

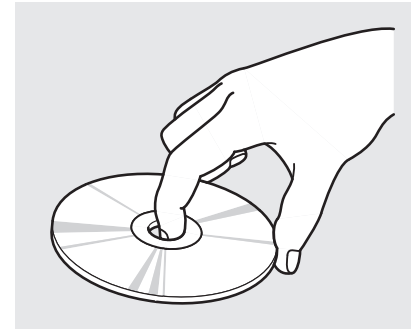

Handle a disc by its edges; never touch either surface. Do not place stabilizer rings or labels on the disc. These, along with contamination from finger prints, liquids, and felt-tip pens, can cause the disc to not play properly, or possibly jam in the drive.

CONTINUED

Protecting Your Discs

Additional Information on Recommended Discs
The disc player/changer has a sophisticated and delicate mechanism. If you insert a damaged disc as indicated below, it may become stuck inside and damage the audio unit.

Examples of these discs are shown to the right:

1. Bubbled, wrinkled, labeled, and excessively thick discs

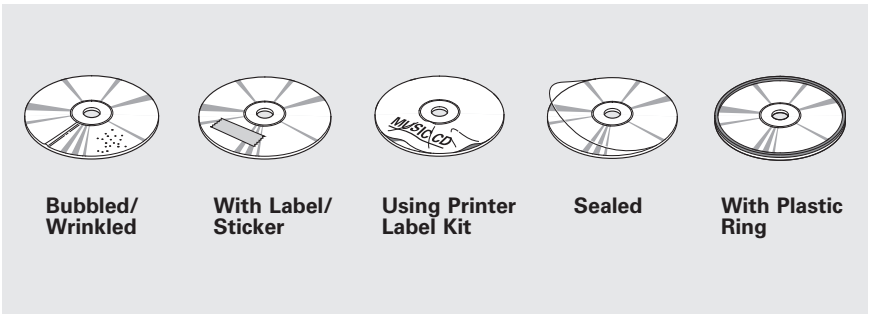

2. Damaged discs

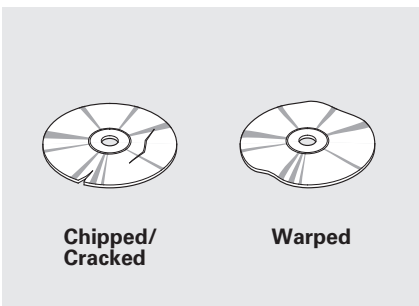

3. Poor quality discs

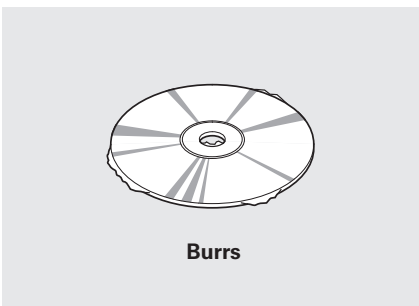

4. Small, irregular shaped discs

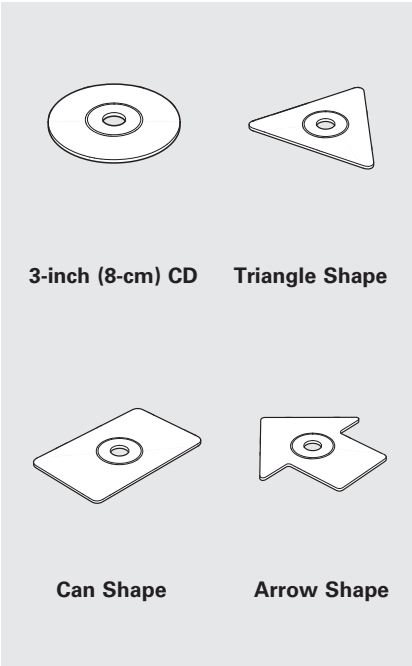

5. Discs with scratches, dirty discs

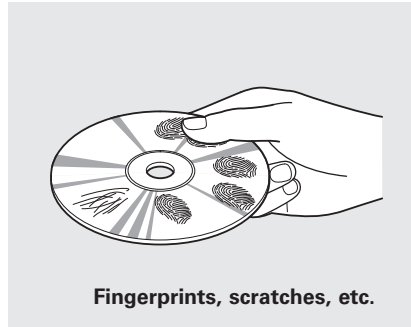

- CD-R or CD-RW may not play due to the recording conditions.
- Scratches and fingerprints on the discs may cause the sound to skip.

- Recommended discs are printed with the following logo.

- Audio unit may not play the following formats.

- This audio unit cannot play a Dual-disc®.

FM/AM Radio Reception

Radio Frequencies
The radio can receive the complete AM and FM bands.
Those bands cover these frequencies:

AM band: 530 to 1,710 kHz
FM band: 87.7 to 107.9 MHz

Radio stations on the AM band are assigned frequencies at least 10 kHz apart (530, 540, 550). Stations on the FM band are assigned frequencies at least 0.2 MHz apart (87.9, 88.1, 88.3).

Stations must use these exact frequencies. It is fairly common for stations to round-off the frequency in their advertising, so your radio could display a frequency of 100.9 even though the announcer may identify the station as “FM101.”

Radio Reception
How well the radio receives stations is dependent on many factors, such as the distance from the station's transmitter, nearby large objects, and atmospheric conditions.

A radio station's signal gets weaker as you get farther away from its transmitter. If you are listening to an AM station, you will notice the sound volume becoming weaker, and the station drifting in and out. If you are listening to an FM station, you will see the stereo indicator flickering off and on as the signal weakens. Eventually, the stereo indicator will go off and the sound will fade completely as you get out of range of the station's signal.

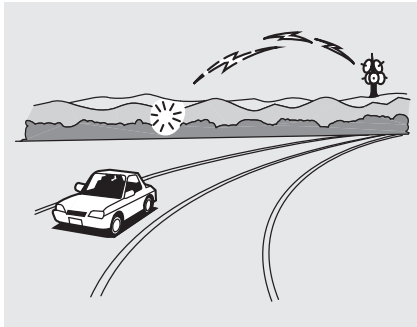

Driving very near the transmitter of a station that is broadcasting on a frequency close to the frequency of the station you are listening to can also affect your radio's reception. You may temporarily hear both stations, or hear only the station you are close to.

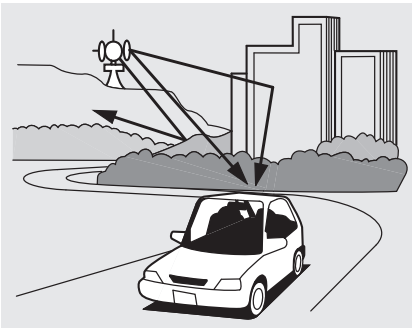

Radio signals, especially on the FM band, are deflected by large objects such as buildings and hills. Your radio then receives both the direct signal from the station's transmitter, and the deflected signal. This causes the sound to distort or flutter. This is a main cause of poor radio reception in city driving.

Radio reception can be affected by atmospheric conditions such as thunderstorms, high humidity, and even sunspots. You may be able to receive a distant radio station one day and not receive it the next day because of a change in conditions.

Electrical interference from passing vehicles and stationary sources can cause temporary reception problems.

As required by the FCC:
Changes or modifications not expressly approved by the party responsible for compliance could void the user's authority to operate the equipment.

Radio Theft Protection

On EX and SC models
Your vehicle's audio system will disable itself if it is disconnected from electrical power for any reason. To make it work again, you must enter a specific code in the preset buttons (icon on vehicle's with navigation system). Because there are hundreds of number combinations possible from specific digits, making the system work without knowing the exact code is nearly impossible.

You should have received a radio code card that lists your audio system's code and serial numbers. It is best to store this card in a safe place at home. In addition, you should write the audio system's serial number in this owner's manual.

If you lose the card, you must obtain the code number from a dealer. To do this, you will need the system's serial number.

If your vehicle's battery is disconnected or goes dead, or the radio fuse is removed, the audio system will disable itself. If this happens, you will see “ENTER CODE” in the frequency display the next time you turn on the system. Use the preset buttons (icons on vehicles with navigation system) to enter the code. The code is on the radio code card included in your owner's manual kit. When it is entered correctly, the radio will start playing.

If you make a mistake entering the code, do not start over; complete the sequence, then enter the correct code. You have 10 tries to enter the correct code. If you are unsuccessful in 10 attempts, you must then leave the system on for 1 hour before trying again.

On vehicles without navigation system
If your vehicle's battery is disconnected or goes dead, you may need to set the clock.

On LX model
To set the hour, press the H button while pressing the CLOCK (SCAN/RPT) button until the hour advances to the desired time. Change the minute by pressing the M button while pressing the CLOCK (SCAN/RPT) button until the minute advances to the desired time.

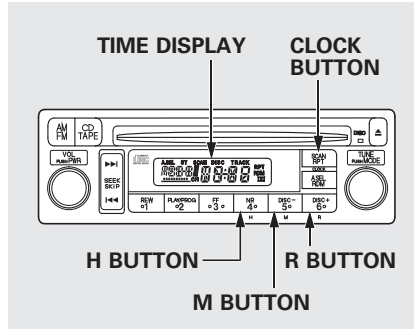

You can use the R button to quickly set the time to the nearest hour. Press the R button while pressing the CLOCK button. If the displayed time is before the half hour, pressing R sets the clock back to the previous hour. If the displayed time is after the half hour, pressing R sets the clock forward to the beginning of the next hour.
For example:
1:06 will reset to 1:00
1:53 will reset to 2:00

On EX and SC models

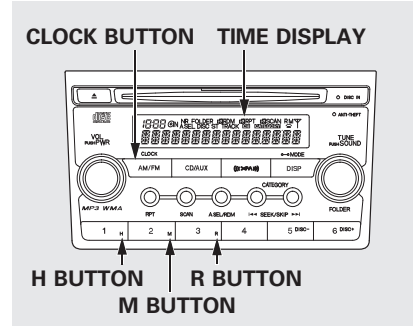

Press and hold the CLOCK button until the numbers flash and you hear a beep. Change the hour by pressing the H button until the numbers advance to the desired time. Change the minute by pressing the M button until the numbers advance to the desired time.

CONTINUED

Setting the Clock

You can quickly set the time to the nearest hour. If the displayed time is before the half hour, press the R (RESET) button to set the clock back to the previous hour. If the displayed time is after the half hour, pressing R sets the clock forward to the beginning of the next hour.

For example:
1:06 will reset to 1:00
1:53 will reset to 2:00

When you are finished, press the CLOCK button again.

On vehicles with navigation system
The navigation system receives signals from the global positioning system (GPS), and the displayed time is updated automatically by the GPS. Refer to the navigation system manual for how to adjust the time.

On EX and SC models

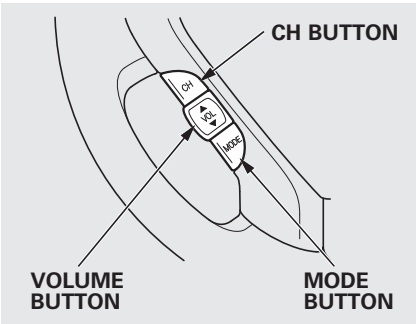

Three controls for the audio system are mounted in the steering wheel hub. These let you control basic functions without removing your hand from the wheel.

The middle button adjusts the volume up (▲) or down (▼). Press the top or bottom of the button and hold it until the desired volume is reached, then release it.

The MODE button changes the mode.

On vehicles with navigation system
Pressing the MODE button repeatedly cycles through all possible media sources whether they are present or not.

On vehicles without navigation system
Pressing the MODE button repeatedly cycles through all present, connected media sources. Media sources that are not present or connected will not appear when cycling with the MODE button.

The CH button has two functions, depending on whether you are listening to the radio, or playing a disc.

If you are listening to the radio, use the CH button to change stations. Each time you press this button, the system advances to the next preset station on the band you are listening to. You will see the number of the selected Preset button in the display. To change bands, or to change from FM1 to FM2 or XM1 to XM2, press the MODE button.

If you are playing a disc, the system skips to the beginning of the next track (file in MP3 or WMA format) each time you press the CH button.

You will see the track/file number and the elapsed time. If has text data or the disc is compressed in MP3 or WMA, you can also see any other information (track title, file name, folder name, etc.).

CONTINUED

Remote Audio Controls, Auxiliary Input Jack

In MP3 or WMA mode, you can use the seek function to select folders. Press and hold the CH button until you hear a beep, to skip forward to the first file of the next folder.

On vehicles with navigation system
If you are playing a PC card, press the CH button to advance to the next file.

If you are playing a USB flash memory device or iPod with the USB adapter cable (if equipped), press and release the CH button to skip forward to the beginning of the next file.

Auxiliary Input Jack

On EX and SC models

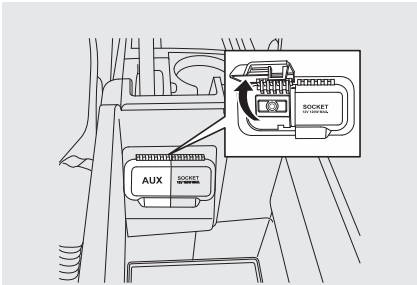

SC model

Your vehicle has the auxiliary input jack on the front panel, or in the console compartment, depending on models. The system will accept auxiliary input from standard audio accessories.

When a compatible audio unit is connected to the jack, press the CD/AUX button (AUX icon on models with navigation system) to select it.

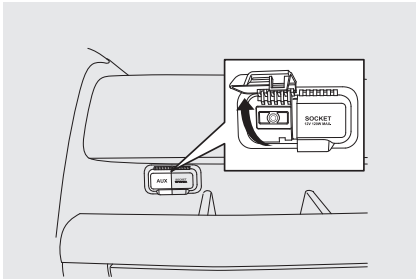

EX model

Cruise control allows you to maintain a set speed above 25 mph (40 km/h) without keeping your foot on the accelerator pedal. It should be used for cruising on straight, open highways. It is not recommended for city driving, winding roads, slippery roads, heavy rain, or bad weather.

⚠ WARNING

Improper use of the cruise control can lead to a crash.

Use the cruise control only when traveling on open highways in good weather.

Using Cruise Control

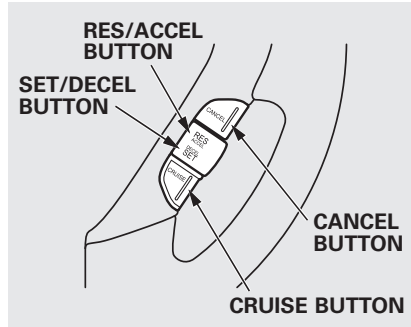

1. Push the CRUISE button on the steering wheel. The CRUISE MAIN indicator on the instrument panel comes on.

The cruise control system can be left on, even when it is not in use.

2. Accelerate to the desired cruising speed above 25 mph (40 km/h).
3. Press and release the SET/DECEL button on the steering wheel. The CRUISE CONTROL indicator on the instrument panel comes on to show the system is now activated.

CONTINUED

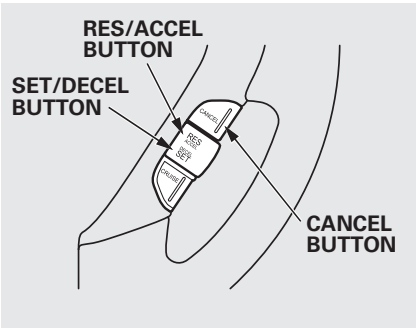

Cruise control may not hold the set speed when you are going up and down hills. If your speed increases going down a hill, use the brakes to slow down. This will cancel cruise control. To resume the set speed, press the RES/ACCEL button. The CRUISE CONTROL indicator on the instrument panel will come back on.

When climbing a steep hill, the automatic transmission may downshift to hold the set speed.

Changing the Set Speed

You can increase the set cruising speed in any of these ways:

- Press and hold the RES/ACCEL button. When you reach the desired cruising speed, release the button.
- To increase your speed in very small amounts, tap the RES/ACCEL button. Each time you do this, the vehicle will speed up about 1 mph (1.6 km/h).
- Push on the accelerator pedal. Accelerate to the desired cruising speed, then press the SET/DECEL button.

You can decrease the set cruising speed in any of these ways:

NOTE: If you need to decrease your speed quickly, use the brakes as you normally would.

- Press and hold the SET/DECEL button. Release the button when you reach the desired speed.
- To slow down in very small amounts, tap the SET/DECEL button. Each time you do this, your vehicle will slow down about 1 mph (1.6 km/h).
- Tap the brake or clutch pedal lightly with your foot. The CRUISE CONTROL indicator on the instrument panel will go out. When the vehicle slows to the desired speed, press the SET/DECEL button.

Even with the cruise control turned on, you can still use the accelerator pedal to speed up for passing. After completing the pass, take your foot off the accelerator pedal. The vehicle will return to the set cruising speed.

Resting your foot on the brake or clutch pedal causes the cruise control to cancel.

Canceling Cruise Control

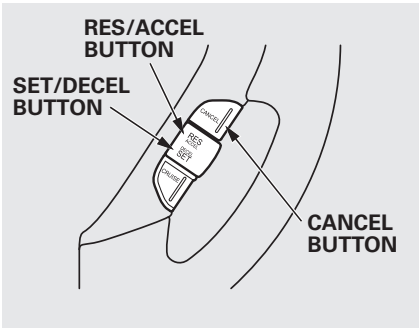

You can cancel cruise control in any of these ways:

- Tap the brake or clutch pedal.
- Push the CANCEL button on the steering wheel.
- Push the CRUISE button on the steering wheel.

Resuming the Set Speed

When you push the CANCEL button, or tap the brake or clutch pedal, the system will remember the previously set cruising speed. To return to that speed, accelerate to above 25 mph (40 km/h) then press and release the RES/ACCEL button. The CRUISE CONTROL indicator will come on. The vehicle will accelerate to the same cruising speed as before.

Pressing the CRUISE button turns the system completely off and erases the previous cruising speed.

Rearview Camera and Monitor

On vehicles with navigation system

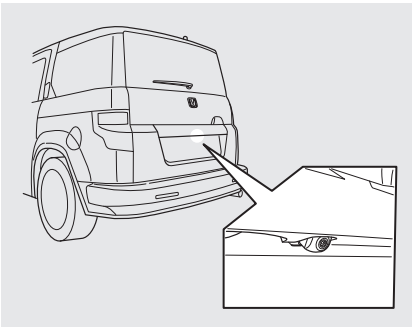

Whenever you shift to reverse (R) with the ignition switch in the ON (II) position, the rear view is shown on the navigation system screen.

For the best picture, always keep the rearview camera clean, and do not cover the camera lens. To avoid scratching the lens when you clean it, use a moist, soft cloth.

When in reverse, the touch screen and navigation system "hard" buttons are locked out, except the "ZOOM" button. Touching the "▼" or "▲" button allows you to adjust the brightness of the rearview camera image.

NOTICE

The camera brightness cannot be adjusted by voice control.

Since the rearview camera display area is limited, you should always back up slowly and carefully, and look behind you for obstacles.

Before you begin driving your vehicle, you should know what gasoline to use and how to check the levels of important fluids. You also need to know how to properly store luggage or packages. The information in this section will help you. If you plan to add any accessories to your vehicle, please read the information in this section first.

Break-in Period 198
Fuel Recommendation 198
Service Station Procedures 199
Refueling..... 199
Opening and Closing the Hood 200
Oil Check..... 201
Engine Coolant Check 201
Fuel Economy..... 202
Accessories and Modifications 205
Carrying Cargo 207

Break-in Period, Fuel Recommendation

Break-in Period
Help assure your vehicle's future reliability and performance by paying extra attention to how you drive during the first 600 miles (1,000 km). During this period:

- Avoid full-throttle starts and rapid acceleration.
- Do not change the oil until the scheduled maintenance time.
- Avoid hard braking for the first 200 miles (300 km).
- Do not tow a trailer.

You should also follow these recommendations with an overhauled or exchanged engine, or when the brakes are replaced.

Fuel Recommendation
Your vehicle is designed to operate on unleaded gasoline with a pump octane number of 87 or higher. Use of a lower octane gasoline can cause a persistent, heavy metallic rapping noise that can lead to engine damage.

On vehicles with manual transmission
You may hear a knocking noise from the engine if you drive the vehicle at low engine speed (below about 1,000 rpm) in a higher gear. To stop this, raise the engine speed by shifting to a lower gear.

We recommend using quality gasoline containing detergent additives that help prevent fuel system and engine deposits.

In addition, in order to maintain good performance, fuel economy, and emissions control, we strongly recommend, in areas where it is available, the use of gasoline that does NOT contain manganese-based fuel additives such as MMT.

Use of gasoline with these additives may adversely affect performance, and cause the malfunction indicator lamp on your instrument panel to come on. If this happens, contact your authorized dealer for service.

Some gasoline today is blended with oxygenates such as ethanol or MTBE. Your vehicle is designed to operate on oxygenated gasoline containing up to 10% ethanol by volume and up to 15% MTBE by volume. Do not use gasoline containing methanol.

If you notice any undesirable operating symptoms, try another service station or switch to another brand of gasoline.

For further important fuel-related information for your vehicle, or information on gasoline that does not contain MMT, visit Owner Link at *owners.honda.com*. In Canada, visit *www.honda.ca* for additional information on gasoline.

Refueling

1. Park with the driver's side closest to the service station pump.
2. Outside of the vehicle, open the fuel fill door by pulling its notched edge.

⚠WARNING

Gasoline is highly flammable and explosive. You can be burned or seriously injured when handling fuel.

- Stop the engine and keep heat, sparks, and flame away.
- Handle fuel only outdoors.
- Wipe up spills immediately.

3. Remove the fuel fill cap slowly. You may hear a hissing sound as pressure inside the tank escapes. Place the cap in the holder on the fuel fill door.
4. Stop filling the tank after the fuel nozzle automatically clicks off. Do not try to “top off” the tank. This leaves some room in the fuel tank for the fuel to expand with temperature changes.

   If the fuel nozzle keeps clicking off even though the tank is not full, there may be a problem with your vehicle's fuel vapor recovery system. The system helps keep fuel vapor from going into the atmosphere. Try filling at another pump. If this does not fix the problem, consult your dealer.
5. Screw the fuel fill cap back on until it clicks at least once. If you do not properly tighten the cap, the malfunction indicator lamp may come on (see page 296). You will also see a “CHECK FUEL CAP” message on the information display.
6. Close the fuel fill door.

Opening and Closing the Hood

1. Park the vehicle, and set the parking brake. Pull the hood release handle located under the lower left corner of the dashboard. The hood will pop up slightly.

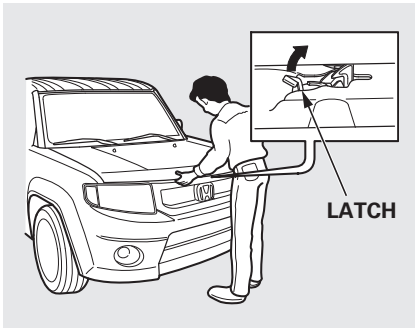

2. Put your fingers under the front edge of the hood near the center. The hood latch handle is above the "H" logo. Push this handle up to release it. Lift up the hood.

   If the hood latch handle moves stiffly, or if you can open the hood without lifting the handle, the mechanism should be cleaned and lubricated.

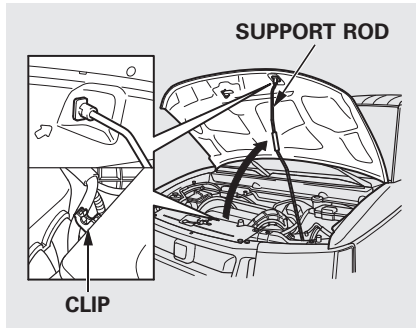

3. Pull the support rod out of its clip and insert the end into the designated hole in the hood.

To close the hood, lift it up slightly to remove the support rod from the hole. Put the support rod back into its holding clip. Lower the hood to about a foot (30 cm) above the fender, then let it drop. Make sure it is securely latched.

Oil Check

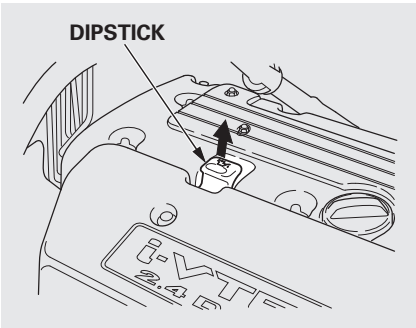

Wait a few minutes after turning the engine off before you check the oil.

1. Remove the dipstick (orange tab).
2. Wipe the dipstick with a clean cloth or paper towel.
3. Insert it all the way back in its tube.

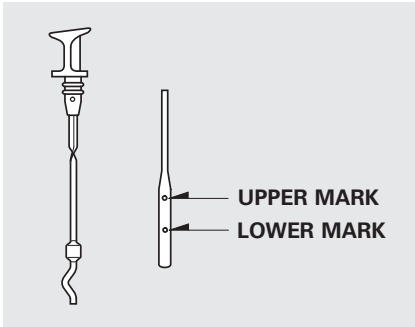

4. Remove the dipstick again, and check the level. It should be between the upper and lower marks.

If it is near or below the lower mark, see **Adding Engine Oil** on page 251.

Engine Coolant Check

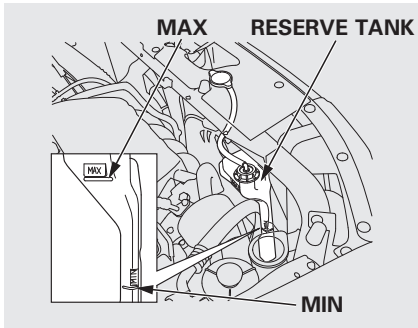

Look at the coolant level in the radiator reserve tank. Make sure it is between the MAX and MIN lines. If it is below the MIN line, see **Adding Engine Coolant** on page 254 for information on adding the proper coolant.

Refer to **Owner's Maintenance Checks** on page 248 for information about checking other items on your vehicle.

Fuel Economy

Actual Mileage and EPA Fuel Economy Estimates Comparison. Fuel economy is not a fixed number. It varies based on driving conditions, driving habits and vehicle condition. Therefore, it is not possible for one set of estimates to predict fuel economy precisely for all drivers in all environments.

The EPA fuel economy estimates shown in the example to the right are a useful tool for comparison when buying a vehicle. EPA estimates include:

City MPG – Represents urban driving in a vehicle in light traffic. A range of miles per gallon achieved is also provided.

Highway MPG – Represents a mixture of rural and interstate driving, in a warmed-up vehicle, typical of longer trips in free-flowing traffic. A range of miles per gallon achieved is also provided.

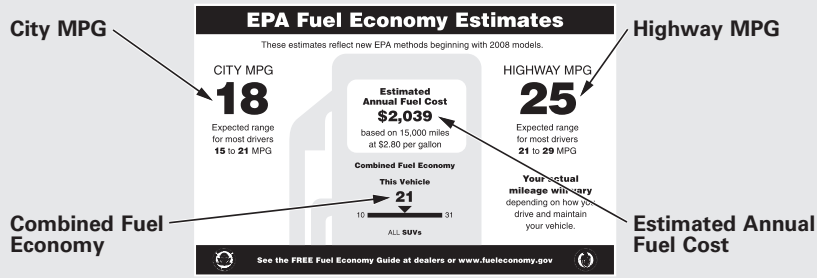

(Sample U.S. EPA label shown)

Combined Fuel Economy – Represents a combination of city and highway driving. The scale represents the range of combined fuel economy for other vehicles in the class.

Estimated Annual Fuel Cost – Provides an estimated annual fuel cost, based on 15,000 miles (20,000 km) per year multiplied by the cost per gallon (based on EPA fuel cost data) divided by the combined fuel economy.

For more information on fuel economy ratings and factors that affect fuel economy, visit *www.fueleconomy.gov* (Canada: Visit *www.vehicles.gc.ca*)

Fuel Economy Factors
The following factors can lower your vehicle's fuel economy:

- Aggressive driving (hard acceleration and braking)
- Excessive idling, accelerating and braking in stop-and-go traffic
- Cold engine operation (engines are more efficient when warmed up)
- Driving with a heavy load or the air conditioner running
- Improperly inflated tires

Improving Fuel Economy

Vehicle Maintenance
A properly maintained vehicle maximizes fuel economy. Poor maintenance can significantly reduce fuel economy. Always maintain your vehicle according to the maintenance messages displayed on the information display (see **Owner's Maintenance Checks** on page 248). For example:

- **Use the recommended viscosity motor oil, displaying the API Certification Seal (see page 251).**
- **Maintain proper tire inflation** – An underinflated tire increases "rolling resistance," which reduces fuel economy.
- **Avoid carrying excess weight in your vehicle** – It puts a heavier load on the engine, increasing fuel consumption.
- **Keep your vehicle clean** – In particular, a build-up of snow or mud on your vehicle's underside adds weight and rolling resistance. Frequent cleaning helps your fuel economy.

Drive Efficiently

- **Drive moderately** – Rapid acceleration, abrupt cornering, and hard braking increase fuel consumption.
- **Observe the speed limit** – Aerodynamic drag has a big effect on fuel economy at speeds above 45 mph (75 km/h). Reduce your speed and you reduce the drag. Trailers, car top carriers, roof racks and bike racks are also big contributors to increased drag.
- **Always drive in the highest gear possible** – If your vehicle has a manual transmission, you can boost your fuel economy by up shifting as early as possible.
- **Avoid excessive idling** – Idling results in 0 miles per gallon (0 kms per liter).

CONTINUED

- **Minimize the use of the air conditioning system** – The A/C puts an extra load on the engine which makes it use more fuel. Use the fresh-air ventilation when possible.
- **Plan and combine trips** – Combine several short trips into one. A warmed-up engine is more fuel efficient than a cold one.

Calculating Fuel Economy

Measuring Techniques

Direct calculation is the recommended source of information about your actual fuel economy. Using frequency of fill-ups or taking fuel gauge readings are NOT accurate measures of fuel economy. Fuel economy may improve over the first several thousand miles.

Checking Your Fuel Economy

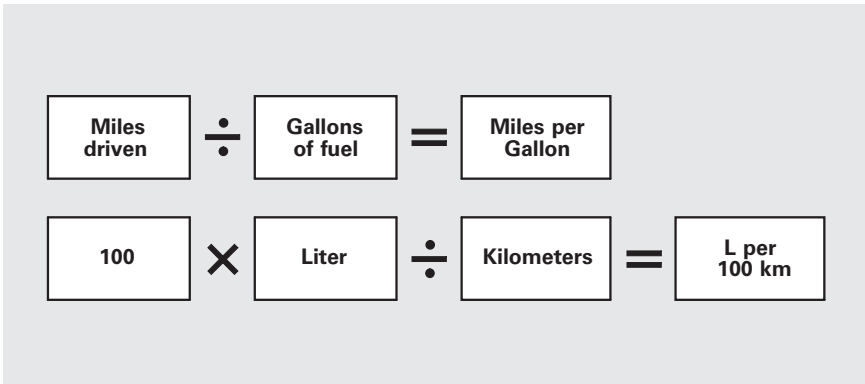

1) Fill the fuel tank until the nozzle automatically clicks off.
2) Reset trip counter to zero.
3) Record the total gallons (liters) needed to refill.
4) Follow one of the simple calculations above.

Modifying your vehicle, or installing some non-Honda accessories, can make it unsafe. Before you make any modifications or add any accessories, be sure to read the following information.

Accessories
Your dealer has Honda accessories that allow you to personalize your vehicle. These accessories have been designed and approved for your vehicle, and are covered by warranty.

Although non-Honda accessories may fit on your vehicle, they may not meet factory specifications, and could adversely affect your vehicle's handling and stability.

⚠WARNING

Improper accessories or modifications can affect your vehicle's handling, stability, and performance, and cause a crash in which you can be hurt or killed.

Follow all instructions in this owner's manual regarding accessories and modifications.

When properly installed, cellular phones, alarms, two-way radios, and low-powered audio systems should not interfere with your vehicle's computer controlled systems, such as your airbags, anti-lock brakes, and tire pressure monitoring system.

Before installing any accessory:

- Make sure the accessory does not obscure any lights, or interfere with proper vehicle operation or performance.
- Be sure electronic accessories do not overload electrical circuits (see page 298) or interfere with the proper operation of your vehicle.
- Before installing any electronic accessory, have the installer contact your dealer for assistance. If possible, have your dealer inspect the final installation.
- Do not install accessories on the side pillars or across the rear windows. Accessories installed in these areas may interfere with proper operation of the side curtain airbags.

CONTINUED

Modifying Your Vehicle
Removing parts from your vehicle, or replacing components with some non-Honda components could seriously affect your vehicle's handling, stability, and reliability.

Some examples are:

- Lowering the vehicle with a non-Honda suspension kit that significantly reduces ground clearance can allow the undercarriage to hit speed bumps or other raised objects, which could cause the airbags to deploy.
- Raising your vehicle with a non-Honda suspension kit can affect the handling and stability.
- Non-Honda wheels, because they are a universal design, can cause excessive stress on suspension components, and are not compatible with the tire pressure monitoring system (TPMS).
- Larger or smaller wheels and tires can interfere with the operation of your vehicle's anti-lock brakes and other systems.
- Modifying your steering wheel or any other part of your vehicle's safety features can make the systems ineffective.

If you plan to modify your vehicle, consult your dealer.

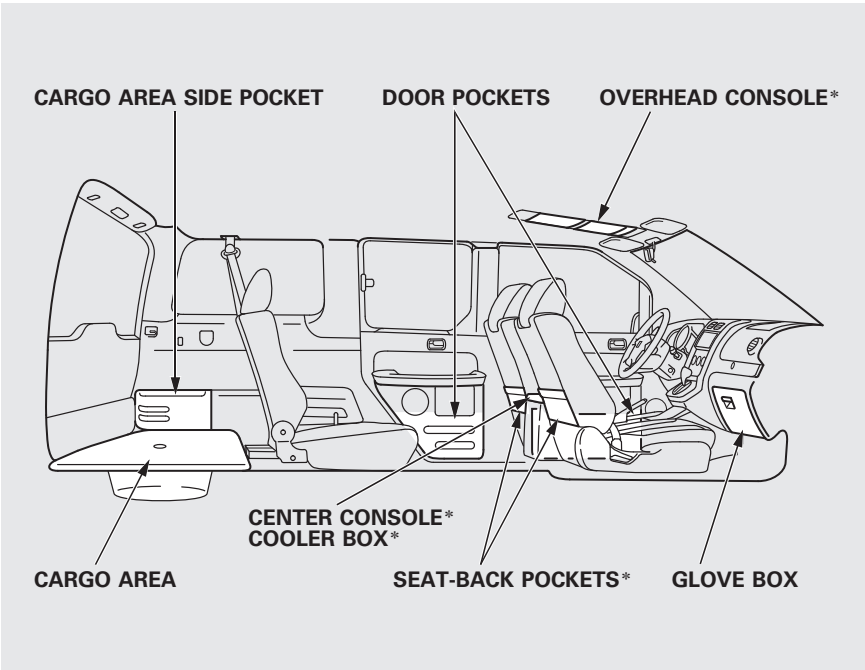

*: If equipped

Your vehicle has several convenient storage areas:

- Cargo area side pockets
- Glove box
- Overhead console (EX and SC models)
- Door pockets
- Seat-back pockets (EX and SC models)
- Cargo area (including rear seats when they are folded down, folded to the side, or removed)
- Seat-back bungees (EX model)
- Roof-rack (if installed)
- Center console (SC model)
- Cooler box (EX model)

CONTINUED

However, carrying too much cargo, or improperly storing it, can affect your vehicle's handling, stability, stopping distance, tires, and make it unsafe. Before carrying any type of cargo, be sure to read the following pages.

Load Limits

The maximum load for your vehicle is 670 lbs (305 kg).

See Tire And Loading Information label attached to the driver's doorjamb.

Label Example

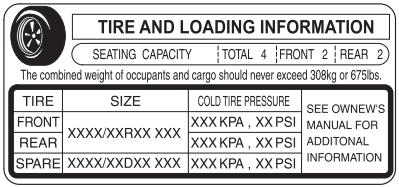

This figure includes the total weight of all occupants, cargo, and accessories, and the tongue load if you are towing a trailer.

⚠ WARNING

Overloading or improper loading can affect handling and stability and cause a crash in which you can be hurt or killed.

Follow all load limits and other loading guidelines in this manual.

Steps for Determining Correct Load Limit –

1. Locate the statement “The combined weight of occupants and cargo should never exceed XXX kg or XXX lbs.” on your vehicle's placard.
2. Determine the combined weight of the driver and passengers that will be riding in your vehicle.
3. Subtract the combined weight of the driver and passengers from XXX kg or XXX lbs.

4. The resulting figure equals the available amount of cargo and luggage load capacity. For example, if the “XXX” amount equals 1,400 lbs. and there will be five 150 lb. passengers in your vehicle, the amount of available cargo and luggage load capacity is 650 lbs.
(1,400 − 750 (5 × 150) = 650 lbs.)
5. Determine the combined weight of luggage and cargo being loaded on the vehicle. That weight may not safely exceed the available cargo and luggage load capacity calculated in Step 4.
6. If your vehicle will be towing a trailer, load from your trailer will be transferred to your vehicle. Consult this manual to determine how this reduces the available cargo and luggage load capacity of your vehicle.

Example 1	Max Load (675 lbs)	≥	Passenger Weight (150 lbs x 2 = 300 lbs)	+	Cargo Weight (375 lbs)
Example 2	Max Load (675 lbs)	≥	Passenger Weight (150 lbs x 3 = 450 lbs)	+	Cargo Weight (225 lbs)
Example 3	Max Load (675 lbs)	≥	Passenger Weight (150 lbs x 4 = 600 lbs)	+	Cargo Weight (75 lbs)

In addition, the total weight of the vehicle, all occupants, accessories, cargo, and trailer tongue load must not exceed the Gross Vehicle Weight Rating (GVWR) or the Gross Axle Weight Rating (GAWR). Both are on a label on the driver's doorjamb.

CONTINUED

Carrying Items in the Passenger Compartment

- Store or secure all items that could be thrown around and hurt someone during a crash.
- Be sure items placed on the floor behind the front seats cannot roll under the seats and interfere with the pedals, the seat operation, or the proper operation of the sensors under the seats.
- Keep the glove box closed while driving. If it is open, a passenger could injure their knees during a crash or sudden stop.
- If you fold the rear seats down or up, or remove them, tie down items that could be thrown about the vehicle during a crash or sudden stop. Also, keep all cargo below the bottom of the windows. If it is higher, it could interfere with the proper operation of the side curtain airbags.

Carrying Cargo in the Cargo Area or on a Roof Rack

- Distribute cargo evenly on the floor of the cargo area, placing the heaviest items on the bottom and as far forward as possible. Tie down items that could be thrown about the vehicle during a crash or sudden stop.
- If you carry large items that prevent you from closing the tailgate or the hatch, exhaust gas can enter the passenger area. To avoid the possibility of **carbon monoxide poisoning,** follow the instructions on page 52.
- If you carry any items on a roof rack, be sure the total weight of the rack and the items does not exceed 75 lbs (34 kg).

  If you use an accessory roof rack, the roof rack weight limit may be lower. Refer to the information that came with your roof rack.

Optional Cargo Net
The cargo net can be used to help hold down light items in the cargo area. The cargo net may not prevent heavy items from being thrown forward in a crash or a sudden stop. Heavy items should be secured to the cargo area floor with the hooks or cinch straps attached to the cargo hooks.

Seat-Back Bungee
On EX model

The driver's seat-back and left rear seat-back are equipped with adjustable bungee cords to hold medium-sized, lightweight objects.

If the cords are not installed, route one cord through the loops as shown. To attach the hooks, press the top of the hook down, and slide to the desired position, then release. Adjust as needed.

CONTINUED

Cargo Hooks

The four hooks on the side panels can be used to install a net for securing items. Each hook is designed to hold up to 50 lbs (23 kg) of weight.

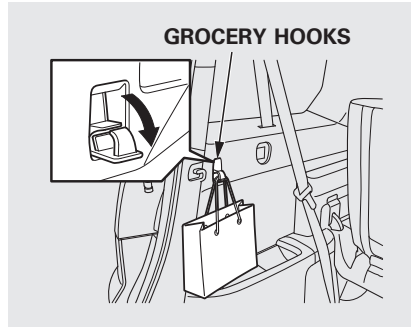

Your vehicle also has a grocery hook on each side panel in the cargo area. They are designed to hold light items. Heavy objects may damage the hook. Make sure any items put on each hook weigh less than 6.5 lbs (3 kg).

This section gives you tips on starting the engine under various conditions, and how to operate the manual and automatic transmissions. It also includes important information on parking your vehicle, the braking system, the vehicle stability assist (VSA®) system, the tire pressure monitoring system (TPMS), and facts you need if you are planning to tow a trailer or drive off-highway.

Driving Guidelines 214
Preparing to Drive 215
Starting the Engine 216
Manual Transmission 217
Automatic Transmission 219
Parking 223
Braking System 224
Anti-lock Brakes (ABS) 225
Tire Pressure Monitoring System (TPMS) 227
Vehicle Stability Assist (VSA®), aka Electronic Stability Control (ESC), System 230
Towing a Trailer 232
Off-Highway Driving Guidelines 238

Driving Guidelines

Your vehicle has a higher ground clearance that allows you to travel over bumps, obstacles, and rough terrain. It also provides good visibility so you can anticipate problems earlier.

Because your vehicle rides higher off the ground, it has a high center of gravity that can cause it to roll over if you make abrupt turns. Utility vehicles have a significantly higher roll over rate than other types of vehicles.

To prevent rollovers or loss of control:

- Take corners at slower speeds than you would with a passenger vehicle.
- Avoid sharp turns and abrupt maneuvers whenever possible.
- Do not modify your vehicle in any way that would raise the center of gravity.
- Do not carry heavy cargo on the roof.

Four-wheel drive models

Your vehicle is equipped with a four-wheel drive (4WD) system. When the system senses a loss of front-wheel traction, it automatically transfers some power to the rear wheels. This gives you better traction and mobility.

You still need to exercise the same care when accelerating, steering, and braking that you would in a two-wheel drive vehicle.

See page 238 for off-highway driving guidelines.

You should do the following checks and adjustments before you drive your vehicle.

1. Make sure all windows, mirrors, and outside lights are clean and unobstructed. Remove frost, snow, or ice.
2. Check that the hood is fully closed.
3. Visually check the tires. If a tire looks low, use a gauge to check its pressure.
4. Check that any items you may be carrying are stored properly or fastened down securely.
5. Check the seat adjustment (see page 83).
6. Check the adjustment of the inside and outside mirrors (see page 93).
7. Check the steering wheel adjustment (see page 74).
8. Make sure the doors, the hatch, and the tailgate are securely closed and locked.
9. Fasten your seat belt. Check that your passengers have fastened their seat belts (see page 14).
10. When you start the engine, check the gauges and indicators in the instrument panel (see page 57).

Starting the Engine

1. Apply the parking brake.
2. In cold weather, turn off all electrical accessories to reduce the drain on the battery.
3. *Manual transmission:*
   Press the clutch pedal down all the way. The START (III) position does not function unless the clutch pedal is pressed.

   Automatic transmission:
   Make sure the shift lever is in Park. Press on the brake pedal.
4. Without touching the accelerator pedal, turn the ignition key to the START (III) position. Do not hold the key in the START (III) position for more than 15 seconds at a time. If the engine does not start right away, pause for at least 10 seconds before trying again.

NOTICE

The immobilizer system protects your vehicle from theft. If an improperly coded key (or other device) is used, the engine's fuel system is disabled. For more information, see page 76.

NOTICE

The engine is harder to start in cold weather. Also, the thinner air found at altitudes above 8,000 feet (2,400 meters) adds to this problem.

U.S. models Only

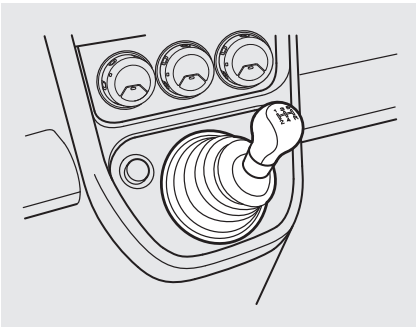

The manual transmission is synchronized in all forward gears for smooth operation. It has a lockout so you cannot shift directly from fifth to reverse. When shifting up or down, make sure you push the clutch pedal down all the way, shift to the next gear, and let the pedal up gradually. When you are not shifting, do not rest your foot on the clutch pedal. This can cause the clutch to wear out faster.

Come to a full stop before you shift into reverse. You can damage the transmission by trying to shift into reverse with the vehicle moving. Push down the clutch pedal, and pause for a few seconds before shifting into reverse, or shift into one of the forward gears for a moment. This stops the gears so they won't “grind.”

When slowing down, you can get extra braking from the engine by shifting to a lower gear. This extra braking can help you maintain a safe speed and prevent your brakes from overheating while going down a steep hill. Before downshifting, make sure the engine speed will not go into the tachometer's red zone in the lower gear.

⚠WARNING

Rapid slowing or speeding up can cause loss of control on slippery surfaces. If you crash, you can be injured.

Use extra care when driving on slippery surfaces.

CONTINUED

Recommended Shift Points
Drive in the highest gear that lets the engine run and accelerate smoothly. This will give you good fuel economy and effective emissions control. The following shift points are recommended:

Shift up	Normal acceleration
1st to 2nd	15 mph (24 km/h)
2nd to 3rd	25 mph (40 km/h)
3rd to 4th	40 mph (64 km/h)
4th to 5th	48 mph (77 km/h)

Engine Speed Limiter
If you exceed the maximum speed for the gear you are in, the engine speed will enter into the tachometer's red zone. If this occurs, you may feel the engine cut in and out. This is caused by a limiter in the engine's computer controls. The engine will run normally when you reduce the rpm below the red zone.

The engine speed limiter only works when you upshift; engine speed is not limited during downshifts. Before downshifting, make sure the engine will not go into the tachometer's red zone.

Shift Lever Position Indicators

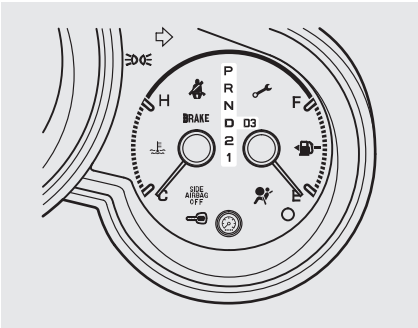

These indicators on the instrument panel show which position the shift lever is in.
The “D” indicator comes on for a few seconds when you turn the ignition switch to the ON (II) position. If it flashes while driving (in any shift position), it indicates a possible problem in the transmission. Avoid rapid acceleration, and have the transmission checked by your dealer as soon as possible.

Shifting

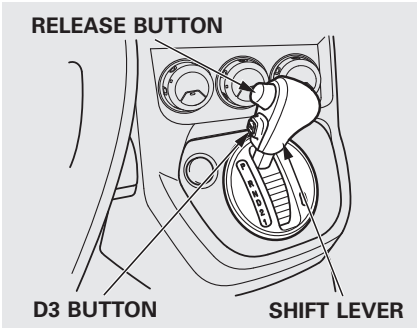

To shift from any position, press firmly on the brake pedal, push the release button, and pull the lever toward you. You cannot shift out of Park when the ignition switch is in the LOCK (0) or ACCESSORY (I) position.

To shift from:	Do this:
P to R	Press the brake pedal, and press the shift lever release button.
R to P N to R D to 2 2 to 1	Press the shift lever release button.
1 to 2 2 to D D to N N to D R to N	Move the shift lever.
D3 to D D to D3	Press the D3 button.

Park (P) – This position mechanically locks the transmission. Use Park whenever you are turning off or starting the engine. To shift out of Park, you must press on the brake pedal and press the release button on the shift lever. Make sure your foot is off the accelerator pedal.

CONTINUED

If you have done all of the above and still cannot move the lever out of Park, see **Shift Lock Release** on page 221.

To avoid transmission damage, come to a complete stop before shifting into Park. You must also press the release button to shift into Park. The shift lever must be in Park before you can remove the key from the ignition switch.

Reverse (R) – Press the brake pedal and press the release button to shift from Park to reverse. To shift from reverse to neutral, come to a complete stop, and then shift.

Neutral (N) – Use neutral if you need to restart a stalled engine, or if it is necessary to stop briefly with the engine idling. Shift to the Park position if you need to leave your vehicle for any reason. Press on the brake pedal when you are moving the shift lever from neutral to another gear.

Drive (D) – Use this position for your normal driving. The transmission automatically selects a suitable gear (1 through 5) for your speed and acceleration. You may notice the transmission shifting up at higher engine speeds when the engine is cold. This helps the engine warm up faster.

Drive (D3) – To use D3, press the D3 button when the shift lever is in the “D” position. This position is similar to D, except only the first three gears are selected instead of all five. Use D3 when towing a trailer in hilly terrain, or to provide engine braking when going down a steep hill. D3 can also keep the transmission from cycling between third and fourth gears in stop-and-go driving.

Second (2) – This position locks the transmission in second gear. It does not downshift to first gear when you come to a stop.

Use second gear:

- For more power when climbing.
- To increase engine braking when going down steep hills.
- For starting out on a slippery surface or in deep snow.
- To help reduce wheel spin.
- When driving downhill with a trailer.

First (1) – This position locks the transmission in first gear. By upshifting and downshifting through 1, 2, D3, and D, you can operate the transmission much like a manual transmission without a clutch pedal.

Engine Speed Limiter
If you exceed the maximum speed for the gear you are in, the engine speed will enter into the tachometer's red zone. If this occurs, you may feel the engine cut in and out. This is caused by a limiter in the engine's computer controls. The engine will run normally when you reduce the rpm below the red zone.

Shift Lock Release
This allows you to move the shift lever out of Park if the normal method of pushing on the brake pedal and pressing the release button does not work.

1. Set the parking brake.
2. Remove the key from the ignition switch.

CONTINUED

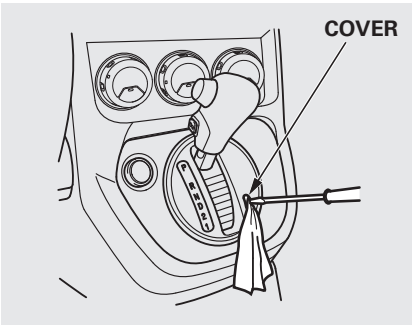

3. Put a cloth on the edge of the shift lock release slot cover next to the shift lever. Using a flat-tip screwdriver, carefully pry on the edge of the cover to remove it.

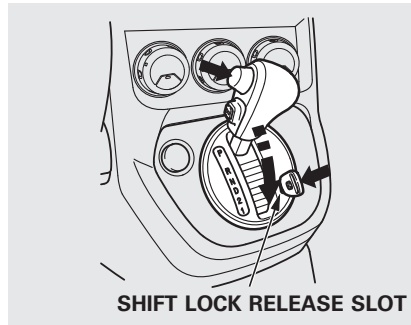

4. Insert the key in the shift lock release slot.
5. Push down on the key while you press the release button on the shift lever and move the shift lever out of Park to neutral.
6. Remove the key from the shift lock release slot, then reinstall the cover. Make sure the notch on the cover is on the right side. Press the brake pedal, and restart the engine.

If you need to use the shift lock release, it means your vehicle is developing a problem. Have it checked by your dealer.

Always use the parking brake when you park your vehicle. Make sure the parking brake is set firmly, or your vehicle may roll if it is parked on an incline.

If your vehicle has an automatic transmission, set the parking brake before you put the transmission in Park. This keeps the vehicle from moving and putting pressure on the parking mechanism in the transmission.

Parking Tips

- Make sure the windows are closed.
- Turn off the lights.
- Place any packages, valuables, etc. in the cargo area or take them with you.
- Lock the doors and the hatch with the key.
- Never park over dry leaves, tall grass, or other flammable materials. The hot three way catalytic converter could cause these materials to catch on fire.
- If the vehicle is facing uphill, turn the front wheels away from the curb. If your vehicle has a manual transmission, put it in first gear.
- If the vehicle is facing downhill, turn the front wheels toward the curb. If your vehicle has a manual transmission, put it in reverse gear.
- Make sure the parking brake is fully released before driving away. Driving with the parking brake partially set can overheat or damage the rear brakes.

Braking System

Your vehicle is equipped with disc brakes at all four wheels. A power assist helps reduce the effort needed on the brake pedal. The emergency brake assist system increases the stopping force when you depress the brake pedal hard in an emergency situation. The anti-lock brake system (ABS) helps you retain steering control when braking very hard.

Resting your foot on the pedal keeps the brakes applied lightly, builds up heat, reduces their effectiveness and reduces brake pad life. In addition, fuel economy can be reduced. It also keeps your brake lights on all the time, confusing drivers behind you.

Constant application of the brakes when going down a long hill builds up heat and reduces their effectiveness. Use the engine to assist the brakes by taking your foot off the accelerator and downshifting to a lower gear.

Check your brakes after driving through deep water. Apply the brakes moderately to see if they feel normal. If not, apply them gently and frequently until they do. Be extra cautious and alert in your driving.

Braking System Design

The hydraulic system that operates the brakes has two separate circuits. Each circuit works diagonally across the vehicle (the left-front brake is connected with the right-rear brake, etc.). If one circuit should develop a problem, you will still have braking at two wheels.

Brake Pad Wear Indicators
If the brake pads need replacing, you will hear a distinctive, metallic screeching sound when you apply the brake pedal. If you do not have the brake pads replaced, they will screech all the time. It is normal for the brakes to occasionally squeal or squeak when you apply them.

Anti-lock Brakes (ABS)
The anti-lock brake system (ABS) helps prevent the wheels from locking up, and helps you retain steering control by pumping the brakes rapidly, much faster than a person can do it.

The electronic brake distribution (EBD) system, which is part of the ABS, also balances the front-to-rear braking distribution according to vehicle loading.

You should never pump the brake pedal. Let the ABS work for you by always keeping firm, steady pressure on the brake pedal. This is sometimes referred to as “stomp and steer.”

You will feel a pulsation in the brake pedal when the ABS activates, and you may hear some noise. This is normal: it is the ABS rapidly pumping the brakes. On dry pavement, you will need to press on the brake pedal very hard before the ABS activates. However, you may feel the ABS activate immediately if you are trying to stop on snow or ice.

CONTINUED

ABS Indicator

If this indicator comes on, the anti-lock function of the braking system has shut down. The brakes still work like a conventional system, but without anti-lock. You should have your dealer inspect your vehicle as soon as possible.

If the indicator comes on while driving, test the brakes as instructed on page 297.

If the ABS indicator and the brake system indicator come on together, and the parking brake is fully released, the EBD system may also be shut down.

Test your brakes as instructed on page 297. If the brakes feel normal, drive slowly and have your vehicle repaired by your dealer as soon as possible. Avoid sudden hard braking which could cause the rear wheels to lock up and possibly lead to a loss of control.

The VSA indicator will come on along with the ABS indicator.

Important Safety Reminders
ABS does not reduce the time or distance it takes to stop the vehicle. It only helps with steering control during braking.

ABS will not prevent a skid that results from changing direction abruptly, such as trying to take a corner too fast or making a sudden lane change. Always drive at a safe speed for the road and weather conditions.

ABS cannot prevent a loss of stability. Always steer moderately when you are braking hard. Severe or sharp steering wheel movement can still cause your vehicle to veer into oncoming traffic or off the road.

A vehicle with ABS may require a longer distance to stop on loose or uneven surfaces, such as gravel or snow, than a vehicle without anti-lock.

Your vehicle is equipped with a tire pressure monitoring system (TPMS) that turns on every time you start the engine and monitors the pressure in your tires while driving.

Each tire has its own pressure sensor (not including the spare tire). If the air pressure of a tire becomes significantly low, the sensor in that tire immediately sends a signal that causes the low tire pressure indicator to come on.

Low Tire Pressure Indicator

When the low tire pressure indicator is on, one or more of your tires is significantly underinflated. You should stop and check your tires as soon as possible, and inflate them to the proper pressure as indicated on the vehicle's tire information placard.

If you think you can safely drive a short distance to a service station, proceed slowly, and inflate the tire to the recommended pressure shown on the driver's doorjamb.

If the tire is flat, or if the tire pressure is too low to continue driving, replace the tire with the compact spare tire (see page 282).

If you cannot make the low tire pressure indicator go out after inflating the tires to the specified values, have your dealer check the system as soon as possible.

Driving on a significantly underinflated tire causes the tire to overheat and can lead to tire failure. Underinflation also reduces fuel efficiency and tire tread life, and may affect the vehicle's handling and stopping ability.

Because tire pressure varies by temperature and other conditions, the low tire pressure indicator may come on unexpectedly.

CONTINUED

For example, if you check and fill your tires in a warm area, then drive in extremely cold weather, the tire pressure will be lower than measured and could be underinflated and cause the low tire pressure indicator to come on. Or, if you check and adjust your tire pressure in cooler conditions, and drive into extremely hot conditions, the tire may become overinflated. However, the low tire pressure indicator will not come on if the tires are overinflated.
Refer to page 271 for tire inflation guidelines.

Although your tire pressure is monitored, you must manually check the tire pressures monthly.

Each tire, including the spare, should be checked monthly when cold and set to the recommended inflation pressure as specified in the vehicle placard and this owner's manual (see page 310).

TPMS Tire Pressure Monitoring System (TPMS) Indicator

This indicator comes on and stays on if there is a problem with the tire pressure monitoring system.

If this happens, the system will shut off and no longer monitor tire pressures. Have the system checked by your dealer as soon as possible.

When you restart the vehicle with the compact spare tire, the TPMS indicator may also come on and stay on after driving several miles (kilometers).

Changing a Tire with TPMS

If you have a flat tire, the low tire pressure indicator will come on. Replace the flat tire with the compact spare tire (see page 282).

Each wheel (except the compact spare tire wheel) is equipped with a tire pressure sensor mounted inside the tire behind the valve stem. You must use TPMS specific wheels. It is recommended that you always have your tires serviced by your dealer or qualified technician.

After you replace the flat tire with the compact spare tire, the low tire pressure indicator stays on. This is normal; the system is not monitoring the spare tire pressure. Manually check the spare tire pressure to be sure it is correct. After several miles (kilometers) driving with the compact spare tire, the TPMS indicator comes on and the low tire pressure indicator goes off.

The low tire pressure indicator or the TPMS indicator will go off, after several miles (kilometers) driving, when you replace the spare tire with the specified regular tire equipped with the tire pressure monitor sensor.

Never use a puncture-repairing agent in a flat tire. If used, you will have to replace the tire pressure sensor. Have the flat tire repaired by your dealer as soon as possible.

As required by the FCC:
This device complies with Part 15 of the FCC rules. Operation is subject to the following two conditions: (1) This device may not cause harmful interference, and (2) this device must accept any interference received, including interference that may cause undesired operation.

Changes or modifications not expressly approved by the party responsible for compliance could void the user's authority to operate the equipment.

This device complies with Industry Canada Standard RSS-210.
Operation is subject to the following two conditions: (1) this device may not cause interference, and (2) this device must accept any interference that may cause undesired operation of the device.

Vehicle Stability Assist (VSA®), aka Electronic Stability Control (ESC), System

The vehicle stability assist (VSA) system helps to stabilize the vehicle during cornering if the vehicle turns more or less than desired. It also assists you in maintaining traction while accelerating on loose or slippery road surfaces. It does this by regulating the engine's output and by selectively applying the brakes.

When VSA activates, you may notice that the engine does not respond to the accelerator in the same way it does at other times. You will also see the VSA system indicator blink.

The VSA system cannot enhance the vehicle's driving stability in all situations and does not control your vehicle's entire braking system. It is still your responsibility to drive and corner at reasonable speeds and to leave a sufficient margin of safety.

VSA OFF Indicator

When VSA is off, the VSA OFF indicator comes on as a reminder.

Vehicle Stability Assist (VSA) System Indicator

When VSA activates, you will see the VSA system indicator blink.

If this indicator comes on while driving, pull to the side of the road when it is safe, and turn off the engine. Reset the system by restarting the engine. If the VSA system indicator stays on or comes back on while driving, have the VSA system inspected by your dealer.

NOTE: The main function of the VSA system is generally known as Electronic Stability Control (ESC). The system also includes a traction control function.

If the indicator does not come on when the ignition switch is turned to the ON (II) position, there may be a problem with the VSA system. Have your dealer inspect your vehicle as soon as possible.

Without VSA, your vehicle will have normal braking and cornering ability, but it will not have VSA traction and stability enhancement.

VSA OFF Switch

In certain unusual conditions when your vehicle gets stuck in shallow mud or fresh snow, it may be easier to free it with the VSA temporarily switched off. When the VSA system is off, the traction control system is also off. You should only attempt to free your vehicle with the VSA off if you are not able to free it when the VSA is on.

Immediately after freeing your vehicle, be sure to switch the VSA on again. We do not recommend driving your vehicle with the VSA and traction control systems switched off.

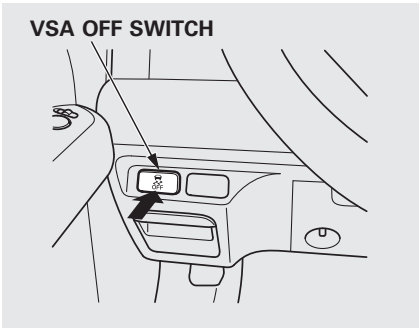

This switch is under the driver's side vent. To turn the VSA system on and off, press and hold it until you hear a beep.

When VSA is off, the VSA OFF indicator comes on as a reminder. Press and hold the switch again. It turns the system back on.

VSA is turned on every time you start the engine, even if you turned it off the last time you drove the vehicle.

VSA and Tire Sizes

Driving with varying tire or wheel sizes may cause the VSA to malfunction. When replacing tires, make sure they are the same size and type as your original tires (see page 275).

If you install winter tires, make sure they are the same size as those that were originally supplied with your vehicle. Exercise the same caution during winter driving as you would if your vehicle was not equipped with VSA.

Towing a Trailer

Your vehicle has been designed primarily to carry passengers and their cargo. You can also use it to tow a trailer if you carefully observe the load limits, use the proper equipment, and follow the guidelines in this section.

Break-In Period
Avoid towing a trailer during your vehicle's first 600 miles (1,000 km) (see page 198).

Be sure to read the **Off-Highway Driving Guidelines** section on page 238 if you plan to tow off paved surfaces.

⚠WARNING

Exceeding any load limit or improperly loading your vehicle and trailer can cause a crash in which you can be seriously hurt or killed.

Check the loading of your vehicle and trailer carefully before starting to drive.

Load Limits

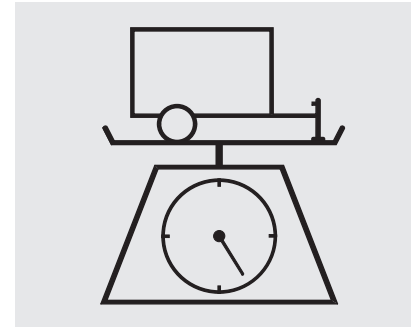

Total Trailer Weight: The maximum allowable weight of the trailer and everything in or on it must not exceed 1,500 lbs (680 kg). Towing a trailer that is too heavy can seriously affect your vehicle's handling and performance. It can also damage the engine and drivetrain.

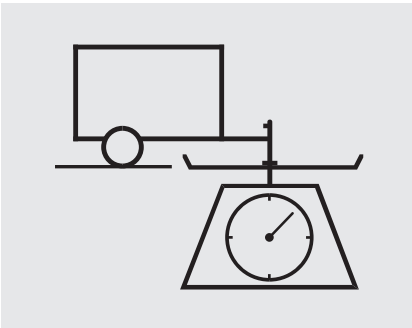

Tongue Load: The weight that the tongue of a fully-loaded trailer puts on the hitch should be approximately 10% of the total trailer weight. Too much tongue load reduces front-tire traction and steering control. Too little tongue load can make the trailer unstable and cause it to sway.

To achieve a proper tongue load, start by loading 60% of the load toward the front of the trailer and 40% toward the rear, then re-adjust the load as needed.

- **Gross Vehicle Weight Rating (GVWR):**
  The maximum allowable weight of the vehicle, all occupants, all accessories, all cargo, and the tongue load is:
  4,450 lbs (2,020 kg)
- **Gross Axle Weight Rating (GAWR):**
  The maximum allowable weight of the vehicle axles is:
  2,300 lbs (1,045 kg)
  on the front axle
  2,205 lbs (1,000 kg)
  on the rear axle

Checking Loads

The best way to confirm that all loads are within limits is to check them at a public scale. For public scales in your area, check your local phone book, or contact your trailer dealer or rental agency for assistance.

If you cannot get to a public scale, you can estimate the total trailer weight by adding the weight of your trailer (as quoted by the manufacturer) with everything in or on the trailer.

If you normally pull the same load each time you tow a trailer, you can use a suitable scale or a special tongue load gauge to check the tongue load the first time you set up a towing combination (a fully loaded vehicle and trailer), then recheck the tongue load whenever the conditions change.

CONTINUED

Towing Equipment and Accessories

Towing can require a variety of equipment, depending on the size of your trailer, how it will be used, how much load you are towing, and where you tow. To ensure the highest quality equipment, purchase Honda equipment whenever possible.

Discuss your needs with your trailer sales or rental agency, and follow the guidelines in the rest of this section. Also make sure that all equipment is properly installed and that it meets federal, state, provincial, territorial and local regulations.

Hitches

Any hitch used on your vehicle must be properly bolted to the underbody.

Safety Chains

Always use safety chains when you tow a trailer. Make sure the chains are secured to the trailer and hitch, and that they cross under the tongue and can catch the trailer if it becomes unhitched. Leave enough slack to allow the trailer to turn corners easily, but do not let the chains drag on the ground.

Trailer Brakes

Honda recommends that any trailer with a total weight of 1,000 lbs (450 kg) or more has its own brake.

There are two common types of trailer brakes; surge and electric. Surge brakes are common for boat trailers, since the brakes will get wet.

If you choose electric brakes, be sure they are electronically actuated. Do not attempt to tap into your vehicle's hydraulic system. No matter how successful it may seem, any attempt to attach trailer brakes to your vehicle's hydraulic system will lower braking effectiveness and create a potential hazard.

See your trailer dealer or rental agency for more information on installing electric brakes.

Trailer Lights

Trailer lights and equipment must comply with federal, state, provincial, territorial, and local regulations. Check with your local trailer dealer or rental agency for the requirements in the area where you plan to tow, and use only equipment designed for your vehicle.

Since lighting and wiring vary by trailer type and brand, you should have a qualified technician install a suitable connector between the vehicle and the trailer. Improper equipment or installation can cause damage to your vehicle's electrical system and affect your vehicle warranty.

Additional Towing Equipment

Many states, Canadian provinces and territories require special outside mirrors when towing a trailer. Even if they don't, you should install special mirrors if you cannot clearly see behind you, or if the trailer creates a blind spot.

Ask your trailer sales or rental agency if any other items are recommended or required for your towing situation.

CONTINUED

Pre-Tow Checklist
When preparing to tow, and before driving away, be sure to check the following:

- The vehicle has been properly serviced, and the tires, brakes, suspension, cooling system, and lights are in good operating condition.
- The trailer has been properly serviced and is in good condition.
- All weights and loads are within limits (see pages 232 and 233).
- The hitch, safety chains, and any other attachments are secure.
- All items in or on the trailer are properly secured and cannot shift while you drive.
- Your vehicle tires and spare are properly inflated (see page 271), and the trailer tires and spare are inflated as recommended by the trailer maker.

Driving Safely With a Trailer
The added weight, length, and height of a trailer will affect your vehicle's handling and performance, so driving with a trailer requires some special driving skills and techniques.

For your safety and the safety of others, take time to practice driving maneuvers before heading for the open road, and follow the guidelines below.

Towing Speeds and Gears
Drive slower than normal in all driving situations, and obey posted speed limits for vehicles with trailers. If you have an automatic transmission, use the D position when towing a trailer on level roads. D3 is the proper shift lever position to use when towing a trailer in hilly terrain. (See "***Driving on Hills***" on the next page for additional gear information.)

Making Turns and Braking
Make turns more slowly and wider than normal. The trailer tracks a smaller arc than your vehicle, and it can hit or run over something the vehicle misses. Allow more time and distance for braking. Do not brake or turn suddenly as this could cause the trailer to jackknife or turn over.

Driving on Hills
When climbing hills, closely watch your temperature gauge. If it nears the red (Hot) mark, turn the air conditioning off, reduce speed and, if necessary, pull to the side of the road to let the engine cool.

If the automatic transmission shifts frequently while going up a hill, shift to D3.

If you must stop when facing uphill, use the foot brake or parking brake. Do not try to hold the vehicle in place by pressing on the accelerator, as this can cause the automatic transmission to overheat.

When driving down hills, reduce your speed, and shift down to second gear. Do not “ride” the brakes, and remember, it will take longer to slow down and stop when towing a trailer.

Handling Crosswinds and Buffeting
Crosswinds and air turbulence caused by passing trucks can disrupt your steering and cause the trailer to sway. When being passed by a large vehicle, keep a constant speed, and steer straight ahead. Do not try to make quick steering or braking corrections.

Backing Up
Always drive slowly and have someone guide you when backing up. Grip the *bottom* of the steering wheel, then turn the wheel to the left to get the trailer to move to the left, and turn the wheel right to move the trailer to the right.

Parking
Follow all normal precautions when parking, including firmly setting the parking brake and putting the transmission in Park (automatic) or in 1st or reverse (manual). Also, place wheel chocks at each of the trailer's tires.

Towing Your Vehicle
Your vehicle is not designed to be towed behind a motor home. If your vehicle needs to be towed in an emergency, see page 303.

Off-Highway Driving Guidelines

General Information

Your vehicle has been designed primarily for use on pavement. But its higher ground clearance allows you to occasionally travel on unpaved roads, such as campgrounds, picnic sites, and similar locations. It is not designed for trail-blazing, mountain climbing, or other challenging off-road activities.

If you decide to drive on unpaved roads, you will find that it requires somewhat different driving skills. Your vehicle will also handle somewhat differently than it does on pavement. So be sure to read this owner's manual, pay special attention to the precautions and tips in this section, and get acquainted with your vehicle before you leave the pavement.

⚠ WARNING

Improperly operating this vehicle on or off pavement can cause a crash or rollover in which you and your passengers could be seriously injured or killed.

- Follow all instructions and guidelines in this owner's manual.
- Keep your speed low, and don't drive faster than conditions permit.

Important Safety Precautions

To avoid loss of control or rollover, be sure to follow all precautions and recommendations.

- Be sure to store cargo properly, and do not exceed your vehicle cargo load limits (see pages 208 and 232).
- Wherever you drive, make sure you and your passengers always wear seat belts.
- Keep your speed low, and never go faster than the conditions allow.
- It's up to you to continually assess the situation and drive within the limits.

Check Out Your Vehicle

Before you leave the pavement, be sure to do all scheduled maintenance and service, and inspect your vehicle for any problems. Pay special attention to the condition of the tires, and check the tire pressures.

After you return to the pavement, carefully inspect your vehicle to make sure there is no damage that could make driving it unsafe. Recheck the condition of the tires and the tire pressures.

Remember

The route presents limits (too steep or bumpy roads). You have limits (driving skill and comfort). And your vehicle has limits (traction, stability, and power).

Driving off-highway can be hazardous if you fail to recognize limits and take the proper precautions.

Accelerating and Braking

For better traction on all surfaces, accelerate slowly and gradually build up speed. If you try to start too fast on wet soil, mud, snow, or ice, you might not have enough traction to get underway, and you may dig yourself a hole. Starting with the shift lever in second (2) gear will help you have a smoother start on snow or ice.

Keep in mind that you will usually need more time and distance to brake to a stop on unpaved surfaces. Avoid hard braking. Do not “pump” the brakes; let the anti-lock braking system pump them for you.

Avoiding Obstacles

Debris on the road can damage your suspension or other components. Because your vehicle has a high center of gravity, driving over a large obstacle, or allowing a wheel to drop into a deep hole can cause your vehicle to tip or roll over.

Driving on Slopes

If you can't clearly see all conditions or obstacles on a slope, walk the slope before you drive on it. If you have any doubt whether or not you can safely drive on the slope, don't do it. Find another route.

If you are driving up a hill and find that you cannot continue, *do not try to turn around.* Your vehicle could roll over. Slowly back down the hill, following the same route you took up the hill.

CONTINUED

Crossing a Stream

Avoid driving through deep water. If you encounter water in your route (a small stream or large puddle, for example), evaluate it carefully before going ahead. Make sure it is shallow, flowing slowly, and has firm ground underneath. If you are not sure of the depth or the ground, turn around and find another route.

Driving through deep water can also damage your vehicle. The water can get into the transmission and differential, diluting the lubricant and causing an eventual failure. It can also wash the grease out of the wheel bearings.

If You Get Stuck

Avoid driving on soft sand, deep mud, or other surfaces where you could get stuck. If you do happen to get stuck because of inclement weather or other conditions, choose a safe and appropriate course of action.

You should never use a jack to try getting unstuck. A jack only works on firm, level ground. Also, your vehicle could easily slip off the jack and hurt you or someone else.

4-Wheel Drive Vehicles

If you spin the wheels excessively trying to get unstuck, you may overheat the components of the 4-wheel drive system. If this happens, the 4-wheel drive system shuts off and only the front wheels receive power. At this point, you must stop and allow everything to cool down. The 4-wheel drive system will work again after its temperature drops.

If you slip the clutch for a long time while trying to get unstuck, you may overheat and damage it.

This section explains why it is important to keep your vehicle well maintained and how to follow basic maintenance safety precautions.
This section also includes instructions on how to read the maintenance minder messages on the information display, and instructions for simple maintenance tasks you may want to take care of yourself.
If you have the skills and tools to perform more complex maintenance tasks on your vehicle, you may want to purchase the service manual. See page 325 for information on how to obtain a copy, or see your dealer.

U.S. Vehicles:
Maintenance, replacement, or repair of emissions control devices and systems may be done by any automotive repair establishment or individual using parts that are "certified" to EPA standards.

Maintenance Safety 242
Maintenance Minder 243
Fluid Locations 250
Adding Engine Oil 251
Changing the Engine Oil and Filter 252
Engine Coolant 254
Windshield Washers 255
Transmission Fluid 256
Automatic Transmission Fluid 256
Manual Transmission Fluid 257
Rear Differential Fluid 258
Brake and Clutch Fluid 258
Power Steering Fluid 260
Cleaning the Body Panels 260
Lights 261
Cleaning the Seat Belts 268
Floor Mats 268
Dust and Pollen Filter 269
Wiper Blades 269
Wheels 271
Tires 271
Checking the Battery 277
Vehicle Storage 278

Maintenance Safety

All service items not detailed in this section should be performed by a certified technician or other qualified mechanic.

Important Safety Precautions
To eliminate potential hazards, read the instructions before you begin, and make sure you have the tools and skills required.

- Make sure your vehicle is parked on level ground, the parking brake is set, and the engine is off.
- To clean parts, use a commercially available degreaser or parts cleaner, not gasoline.
- To reduce the possibility of fire or explosion, keep cigarettes, sparks, and flames away from the battery and all fuel-related parts.
- Wear eye protection and protective clothing when working with the battery or compressed air.

⚠WARNING

Improperly maintaining this vehicle, or failing to correct a problem before driving can cause a crash in which you can be seriously hurt or killed.

Always follow the inspection and maintenance recommendations and schedules in this owner's manual.

Potential Vehicle Hazards

- **Carbon Monoxide poison from engine exhaust.** Be sure there is adequate ventilation whenever you operate the engine.
- **Burns from hot parts.** Let the engine and exhaust system cool down before touching any parts.
- **Injury from moving parts.** Do not run the engine unless instructed to do so.

⚠WARNING

Failure to properly follow maintenance instructions and precautions can cause you to be seriously hurt or killed.

Always follow the procedures and precautions in this owner's manual.

Some of the most important safety precautions are given here. However, we cannot warn you of every conceivable hazard that can arise in performing maintenance. Only you can decide whether or not you should perform a given task.

Your vehicle displays engine oil life and maintenance service items on the information display to show you when you should have your dealer do engine oil replacement and indicated maintenance service.

Based on the engine operating conditions and accumulated engine revolutions, the onboard computer in your vehicle calculates the remaining engine oil life and displays it as a percentage.

Engine Oil Life Display

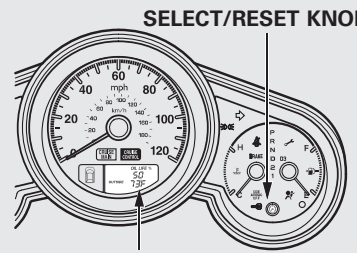

U.S. model is shown.

To see the current engine oil life, turn the ignition switch to the ON (II) position, then press and release the select/reset knob repeatedly until the engine oil life indicator appears.

The remaining engine oil life is shown on the display according to this table:

Calculated Engine Oil Life (%)	Displayed Engine Oil Life (%)
100% – 91%	100%
90% – 81%	90%
80% – 71%	80%
70% – 61%	70%
60% – 51%	60%
50% – 41%	50%
40% – 31%	40%
30% – 21%	30%
20% – 16%	20%
15% – 11%	15%
10% – 6%	10%
5% – 1%	5%
0%	0%

CONTINUED

Maintenance Minder

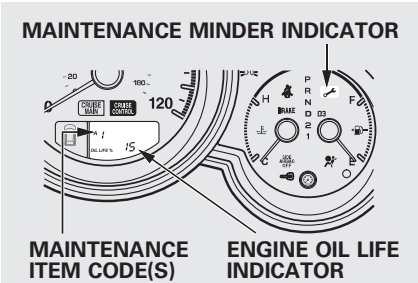

U.S. model is shown.

If the remaining engine oil life is 15 to 6 percent, you will see the engine oil life indicator every time you turn the ignition switch to the ON (II) position. The maintenance minder indicator will also come on, and the maintenance item code(s) for other scheduled maintenance items needing service will be displayed above the “OIL LIFE” message.

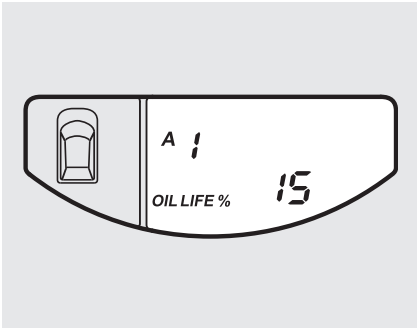

The 15 and 10 percent oil life indicator reminds you that the time is coming soon to take your vehicle in for the required maintenance.

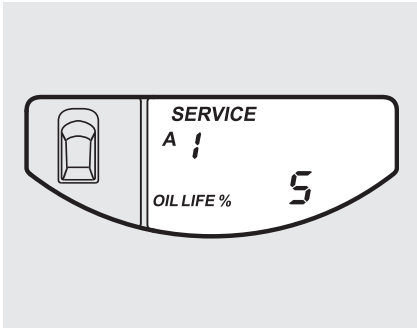

When the remaining engine oil life is 5 to 1 percent, you will see a “SERVICE” message along with the same maintenance item code(s), every time you turn the ignition switch to the ON (II) position.

The maintenance item code or codes indicate the main and sub items required at the time of the oil change (see page 246).

You can switch the information display from the engine oil life display to the odometer or the trip meter. Press and release the select/reset knob on the instrument panel.

When the engine oil life is 15 to 1 percent, the maintenance minder indicator ( ) comes on every time you turn the ignition switch to the ON (II) position, then it goes out if you switch the information display.

When you see this message, have the indicated maintenance performed by your dealer as soon as possible.

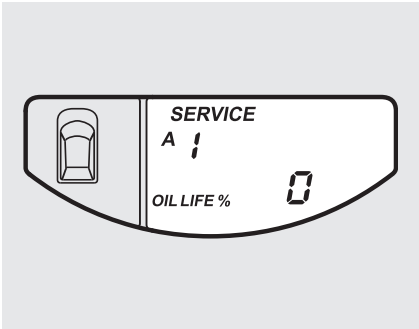

When the remaining engine oil life is 0 percent, the engine oil life indicator will blink. The display comes on every time you turn the ignition switch to the ON (II) position. The maintenance minder indicator ( ) also comes on and remains on in the instrument panel. When you see this message, immediately have the indicated maintenance done by your dealer.

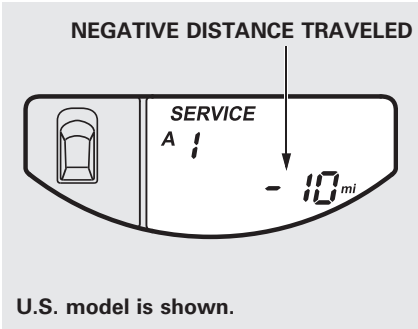

U.S. model is shown.

If you do not perform the indicated maintenance, negative distance traveled is displayed and begins to blink after the vehicle has been driven 10 miles (10 km) or more. Negative distance traveled means your vehicle has passed the maintenance required point. Immediately have the indicated maintenance done by your dealer.

CONTINUED

Maintenance Minder

To change the information display from the engine oil life display to the odometer or the trip meter, press and release the select/reset knob.

When the engine oil life is 0 percent or negative distance traveled, the maintenance minder indicator ( ) remains on even if you change the information display.

Immediately have the service performed, and make sure to reset the display as described as follows.

Maintenance Main Items and Sub Items

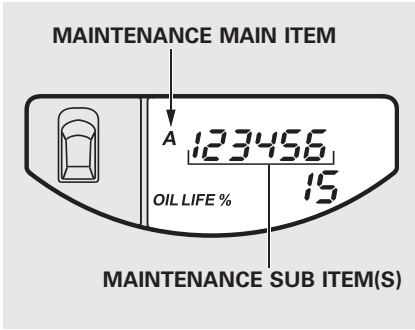

All maintenance items displayed on the information display are in code. For an explanation of these maintenance codes, see page 249.

Resetting the Engine Oil Life Display

Your dealer will reset the display after completing the required maintenance service. You will see “OIL LIFE 100%” on the information display the next time you turn the ignition switch to the ON (II) position.

If maintenance service is done by someone other than your dealer, reset the maintenance minder as follows:

1. Turn the ignition switch to the ON (II) position.
2. Press the select/reset knob repeatedly until the engine oil life is displayed.

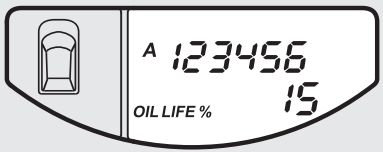

3. Press the select/reset knob for about 10 seconds. The engine oil life and the maintenance item code(s) will blink.

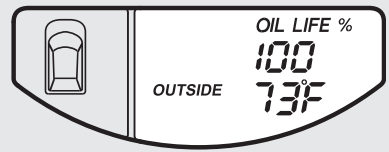

U.S. model is shown.

4. Press the select/reset knob for another 5 seconds. The maintenance item code(s) will disappear, and the engine oil life will reset to “100.”

Important Maintenance Precautions

If you have the required service done but do not reset the display, or reset the display without doing the service, the system will not show the proper maintenance intervals. This can lead to serious mechanical problems because you will no longer have an accurate record of when maintenance is needed.

Your authorized Honda dealer knows your vehicle best and can provide competent, efficient service.

CONTINUED

However, service at a dealer is not mandatory to keep your warranties in effect. Maintenance may be done by any qualified service facility or person who is skilled in this type of automotive service. Make sure to have the service facility or person reset the display as previously described. Keep all receipts as proof of completion, and have the person who does the work fill out your Honda Service History or Canadian Maintenance Log. Check your warranty booklet for more information.

We recommend using Honda parts and fluids whenever you have maintenance done. These are manufactured to the same high quality standards as the original components, so you can be confident of their performance and durability.

U.S. Vehicles:
According to state and federal regulations, failure to perform maintenance on the items marked with # will not void your emissions warranties. However, all maintenance services should be performed in accordance with the intervals indicated by the information display.

Owner's Maintenance Checks
You should check the following items at the specified intervals. If you are unsure of how to perform any check, turn to the appropriate page listed.

- Engine oil level – Check every time you fill the fuel tank. See page 201.
- Engine coolant level – Check the radiator reserve tank every time you fill the fuel tank. See page 201.
- Automatic transmission – Check the fluid level monthly. See page 256.
- Brakes – Check the fluid level monthly. See page 258.
- Tires – Check the tire pressure monthly. Examine the tread for wear and foreign objects. See page 271.
- Lights – Check the operation of the headlights, parking lights, taillights, high-mount brake light, and license plate lights monthly. See page 261.

Symbol	Maintenance Main Items
A	• Replace engine oil*1

B	• Replace engine oil*1 and oil filter
	• Inspect front and rear brakes
	• Check parking brake adjustment
	• Inspect these items:
	  • Tie rod ends, steering gear box, and boots
	  • Suspension components
	  • Driveshaft boots
	  • Brake hoses and lines (including ABS/VSA)
	  • All fluid levels and condition of fluids
	  • Exhaust system#
	  • Fuel lines and connections#

*1: If the message "SERVICE" does not appear more than 12 months after the display is reset, change the engine oil every year.

#: See information on maintenance and emissions warranty on page 248.

NOTE:
- Independent of the maintenance message in the information display, replace the brake fluid every 3 years.
- Inspect idle speed every 160,000 miles (256,000 km).
- Adjust the valves during services A, B, 1, 2, or 3 if they are noisy.

Symbol	Maintenance Sub Items
1	• Rotate tires
2	• Replace air cleaner element If you drive in dusty conditions, replace every 15,000 miles (24,000 km). • Replace dust and pollen filter If you drive primarily in urban areas that have high concentrations of soot in the air from industry and from diesel-powered vehicles, replace every 15,000 miles (24,000 km). • Inspect drive belt
3	• Replace transmission fluid Driving in mountainous areas at very low vehicle speeds or trailer towing results in higher transmission and transfer temperatures. This requires transmission and transfer fluid changes more frequently than recommended by the maintenance minder. If you regularly drive your vehicle under these conditions, have the transmission and transfer fluid changed at 60,000 miles (100,000 km), then every 30,000 miles (48,000 km) (For A/T only).
4	• Replace spark plugs • Inspect valve clearance
5	• Replace engine coolant
6	• Replace rear differential fluid (4WD model only)

Fluid Locations

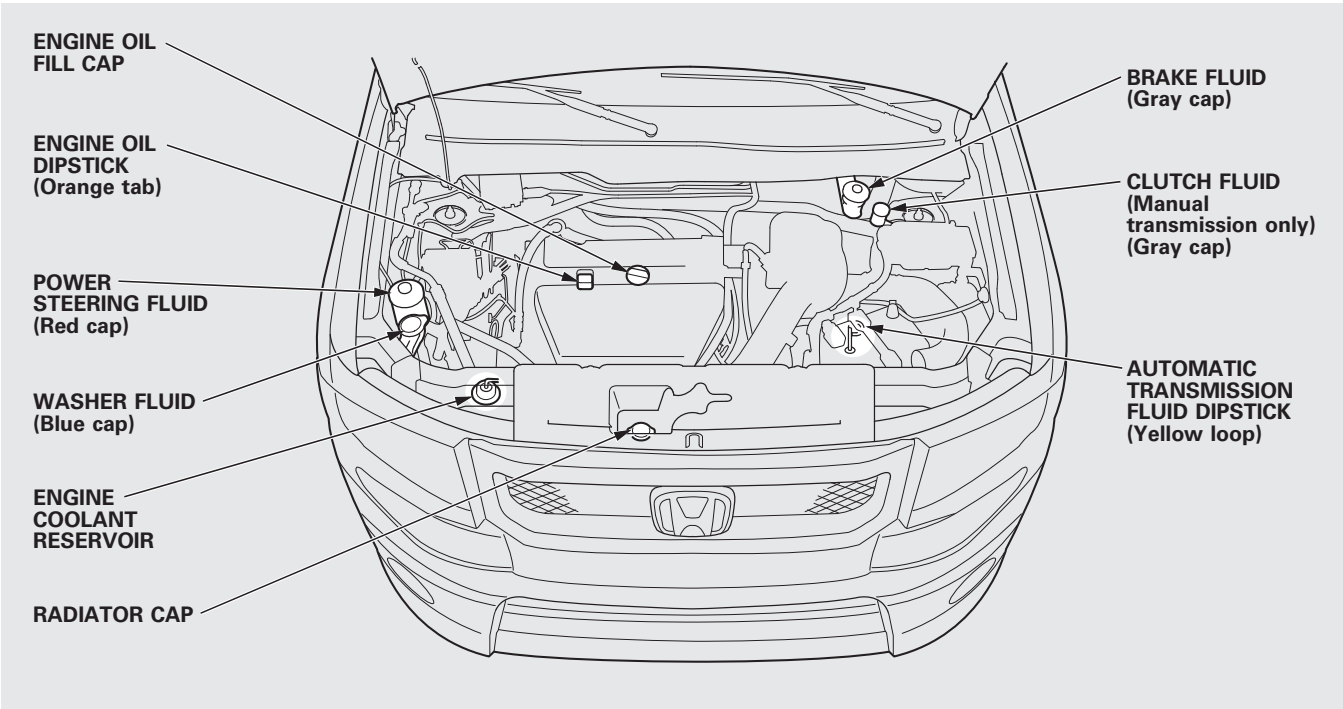

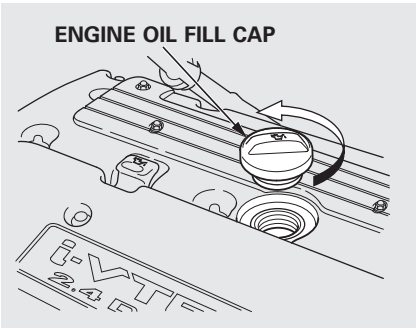

Unscrew and remove the engine oil fill cap on top of the valve cover. Pour in the oil slowly and carefully so you do not spill. Clean up any spills immediately. Spilled oil could damage components in the engine compartment.

Reinstall the engine oil fill cap, and tighten it securely. Wait a few minutes, and recheck the oil level on the engine oil dipstick. Do not fill above the upper mark; you could damage the engine.

Recommended Engine Oil

Oil is a major contributor to your engine's performance and longevity. Always use a premium-grade 5W-20 detergent oil displaying the API Certification Seal. This seal indicates the oil is energy conserving, and that it meets the American Petroleum Institute's latest requirements.

API CERTIFICATION SEAL

Honda motor oil is the preferred 5W-20 lubricant for your vehicle. It is highly recommended that you use Honda motor oil in your vehicle for optimum engine protection. Make sure the API Certification Seal says “For Gasoline Engines.”

The oil viscosity or weight is provided on the container's label. 5W-20 oil is formulated for year-round protection of your vehicle to improve cold weather starting and fuel economy.

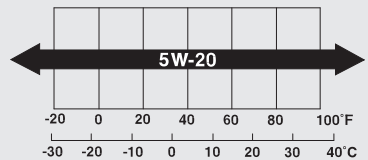

Ambient Temperature

CONTINUED

Adding Engine Oil, Changing the Engine Oil and Filter

Synthetic Oil

You may use a synthetic motor oil if it meets the same requirements given for a conventional motor oil, it displays the API Certification Seal, and it is the proper weight. You must follow the oil and filter change intervals shown on the maintenance minder display.

Engine Oil Additives

Your vehicle does not require any oil additives. Additives may adversely affect the engine or transmission performance and durability.

Changing the Engine Oil and Filter

Always change the oil and filter according to the maintenance messages shown on the information display. The oil and filter collect contaminants that can damage your engine if they are not removed regularly.

Changing the oil and filter requires special tools and access from underneath the vehicle. The vehicle should be raised on a service station-type hydraulic lift for this service. Unless you have the knowledge and proper equipment, you should have this maintenance done by a skilled technician.

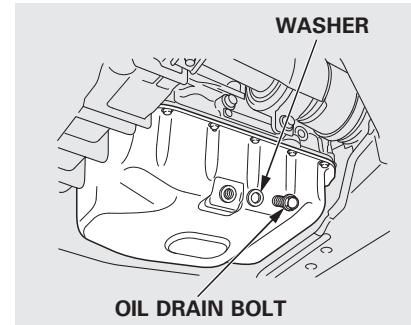

1. Run the engine until it reaches normal operating temperature, then shut it off.
2. Open the hood, and remove the engine oil fill cap. Remove the oil drain bolt and washer from the bottom of the engine. Drain the oil into an appropriate container.

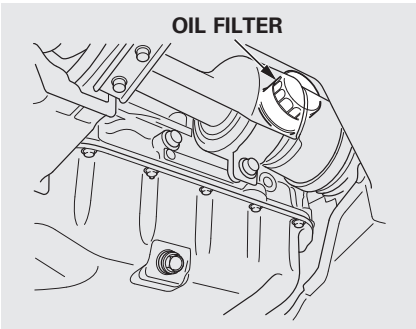

3. Remove the oil filter and let the remaining oil drain. A special wrench (available from your dealer) is required.

   Make sure the oil filter gasket is not stuck to the engine block. If it is, remove it before installing a new oil filter.

4. Install a new oil filter according to the instructions that come with it.

   Make sure to clean off any dirt and dust on the connecting surface of a new oil filter.

5. Put a new washer on the drain bolt, then reinstall the drain bolt. Tighten the drain bolt to:
   33 lbf·ft (45 N·m, 4.5 kgf·m)

6. Refill the engine with the recommended oil.

   Engine oil change capacity (including filter):
   4.4 US qt (4.2 L)

7. Replace the engine oil fill cap. Start the engine. The oil pressure indicator should go out within 5 seconds. If it does not, turn off the engine, and check your work.

8. Let the engine run for several minutes, then check the drain bolt and oil filter for leaks.

9. Turn off the engine and let it sit for several minutes, then check the oil level on the dipstick. If necessary, add more oil.

NOTICE

Improper disposal of engine oil can be harmful to the environment. If you change your own oil, please dispose of the used oil properly. Put it in a sealed container, and take it to a recycling center. Do not discard it in a trash bin or dump it on the ground.

Adding Engine Coolant

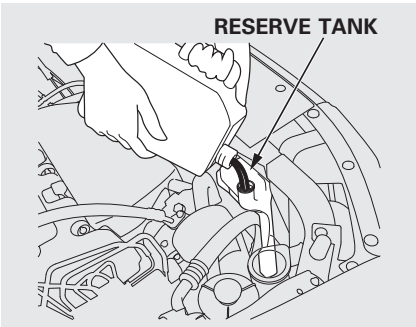

If the coolant level in the reserve tank is at or below the MIN line, add coolant to bring it up to the MAX line. Inspect the cooling system for leaks.

Always use Honda Long-life Antifreeze/Coolant Type 2. This coolant is pre-mixed with 50 percent antifreeze and 50 percent distilled water. Never add straight antifreeze or plain water.

If Honda antifreeze/coolant is not available, you may use another major-brand non-silicate coolant as a temporary replacement. Make sure it is a high-quality coolant recommended for aluminum engines. Continued use of any non-Honda coolant can result in corrosion, causing the cooling system to malfunction or fail. Have the cooling system flushed and refilled with Honda antifreeze/coolant as soon as possible.

If the reserve tank is completely empty, you should also check the coolant level in the radiator.

⚠ WARNING

Removing the radiator cap while the engine is hot can cause the coolant to spray out, seriously scalding you.

Always let the engine and radiator cool down before removing the radiator cap.

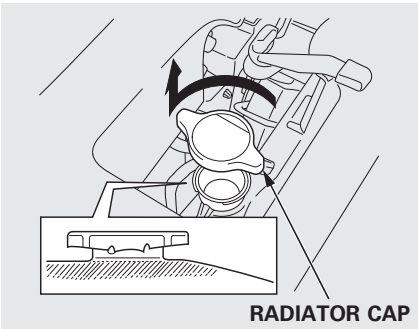

1. Make sure the engine and radiator are cool.
2. Relieve any pressure in the cooling system by turning the radiator cap counterclockwise, without pressing down.
3. Remove the radiator cap by pushing down and turning counterclockwise.
4. The coolant level should be up to the base of the filler neck. Add coolant if it is low.

   Pour the coolant slowly and carefully so you do not spill any. Clean up any spill immediately; it could damage components in the engine compartment.
5. Put the radiator cap back on and tighten it fully.
6. Pour coolant into the reserve tank. Fill it to halfway between the MAX and MIN marks. Put the cap back on the reserve tank.

Do not add any rust inhibitors or other additives to your vehicle's cooling system. They may not be compatible with the coolant or engine components.

Windshield Washers

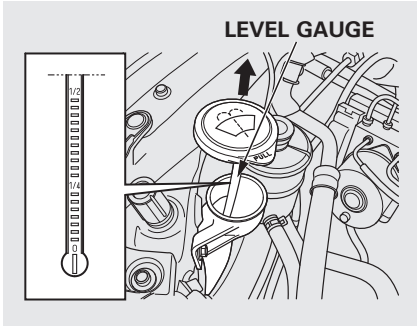

Check the fluid level in the windshield washer reservoir at least monthly during normal use.

On U.S. models: Check the reservoir's fluid level by removing the cap and looking at the level gauge attached to the cap.

CONTINUED

Windshield Washers, Transmission Fluid

On Canadian models: The low washer level indicator comes on when the level is low (see page 61).

Fill the reservoir with a good-quality windshield washer fluid. This increases the cleaning capability and prevents freezing in cold weather.

When you refill the reservoir, clean the edges of the windshield wiper blades with windshield washer fluid on a clean cloth. This will help to condition them.

NOTICE

Do not use engine antifreeze or a vinegar/water solution in the windshield washer reservoir. Antifreeze can damage your vehicle's paint, while a vinegar/water solution can damage the windshield washer pump. Use only commercially-available windshield washer fluid.

Automatic Transmission Fluid

Check the fluid level with the engine at normal operating temperature.

1. Park the vehicle on level ground. Start the engine, let it run until the radiator fan comes on, then shut off the engine. For accurate results, wait about 60 seconds (but no longer than 90 seconds) before doing step 2.

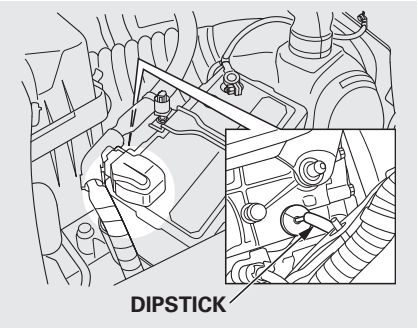

2. Remove the dipstick (yellow loop) from the transmission, and wipe it with a clean cloth.

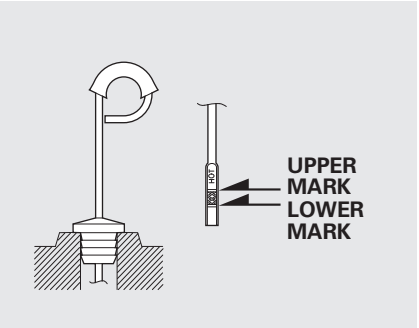

3. Insert the dipstick all the way into the transmission securely as shown in the illustration.
4. Remove the dipstick and check the fluid level. It should be between the upper and lower marks.

5. If the level is below the lower mark, add fluid into the dipstick hole to bring it to the level between the upper and lower marks.
   Pour the fluid slowly and carefully so you do not spill any. Clean up any spill immediately; it could damage components in the engine compartment.
   Always use Honda Genuine ATF-Z1 (automatic transmission fluid).

NOTICE

Use only Honda Genuine ATF-Z1 (automatic transmission fluid). Do not mix with other transmission fluids. Using transmission fluid other than Honda Genuine ATF-Z1 may cause deterioration in transmission operation and durability, and could result in damage to the transmission.
Damage resulting from the use of transmission fluid other than Honda Genuine ATF-Z1 is not covered by the Honda new vehicle warranty.

6. Insert the dipstick all the way back into the transmission securely as shown in the illustration.

The transmission should be drained and refilled with new fluid according to the maintenance minder (see page 243).

If you are not sure how to add fluid, contact your dealer.

Manual Transmission Fluid

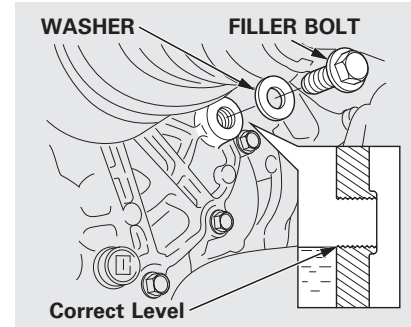

Check the fluid level with the transmission at normal operating temperature and the vehicle on level ground. Remove the transmission filler bolt, and carefully feel inside the bolt hole with your finger. The fluid level should be up to the edge of the bolt hole. If it is not, add Honda Manual Transmission Fluid (MTF) until it starts to run out of the hole.

CONTINUED

Put a new washer on the filler bolt, then reinstall the filler bolt and tighten it securely.

If Honda MTF is not available, you may use an SAE 10W-30 or 10W-40 viscosity motor oil with the API Certification Seal that says “FOR GASOLINE ENGINES” as a temporary replacement. However, motor oil does not contain the proper additives, and continued use can cause stiffer shifting. Replace as soon as it is convenient.

The transmission should be drained and refilled with new fluid according to the maintenance minder (see page 243).

If you are not sure how to check and add fluid, contact your dealer.

Rear Differential Fluid
4WD models only
The rear differential should be drained and refilled with new fluid according to the time and distance recommendations shown on the maintenance minder display. Have your dealer replace the rear differential fluid.

Use Honda Dual Pump Fluid II only. Do not use automatic transmission fluid (ATF).

Brake and Clutch Fluid
Check the fluid level in the reservoirs monthly.
There are up to two reservoirs, depending on the model. They are:

- Brake fluid reservoir (all models)
- Clutch fluid reservoir (manual transmission only)

Replace the brake fluid according to the time recommendation in the maintenance minder schedule.

Always use Honda Heavy Duty Brake Fluid DOT 3. If it is not available, you should use only DOT 3 or DOT 4 fluid, from a sealed container, as a temporary replacement.

Using any non-Honda brake fluid can cause corrosion and decrease the life of the system. Have the brake system flushed and refilled with Honda Heavy Duty Brake Fluid DOT 3 as soon as possible.

Brake fluid marked DOT 5 is not compatible with your vehicle's braking system and can cause extensive damage.

Brake Fluid

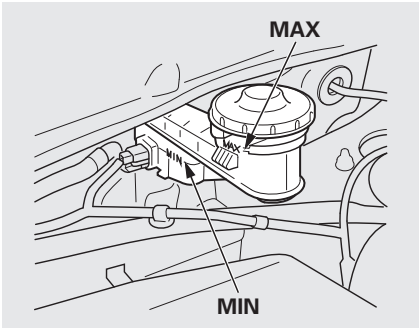

The fluid level should be between the MIN and MAX marks on the side of the reservoir. If the level is at or below the MIN mark, your brake system needs attention. Have the brake system inspected for leaks or worn brake pads.

Clutch Fluid

On vehicles with manual transmission

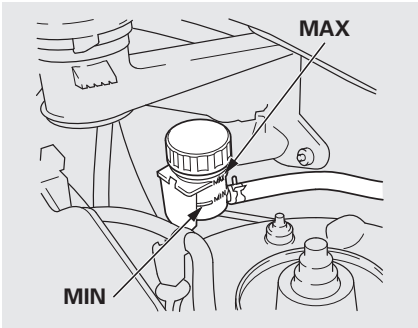

The fluid level should be between the MIN and MAX marks on the side of the reservoir. If it is not, add brake fluid to bring it up to that level. Use the same fluid specified for the brake system.

A low fluid level can indicate a leak in the clutch system. Have this system inspected as soon as possible.

Power Steering Fluid, Cleaning the Body Panels

Power Steering Fluid

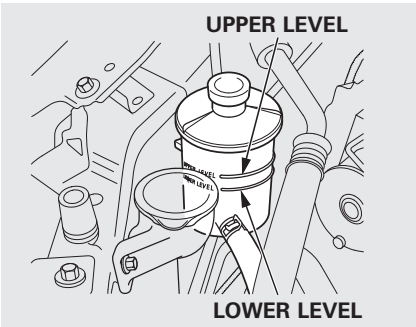

Check the level on the side of the reservoir when the engine is cold. The fluid should be between the UPPER LEVEL and LOWER LEVEL. If not, add power steering fluid to the UPPER LEVEL.

Pour the fluid slowly and carefully so you do not spill any. Clean up any spills immediately; it could damage components in the engine compartment.

Always use Honda Power Steering Fluid. You may use another power steering fluid as an emergency replacement, but have the power steering system flushed and refilled with Honda PSF as soon as possible.

A low power steering fluid level can indicate a leak in the system. Check the fluid level frequently, and have the system inspected as soon as possible.

If you are not sure how to add fluid, contact your dealer.

NOTICE

Turning the steering wheel to full left or right lock and holding it there can damage the power steering pump.

Cleaning the Body Panels

If equipped with body panels

To clean the gray composite body panels, wash them with soap and water only. Do not apply wax to the panels; it will cause discoloration.

Headlight Aiming

The headlights were properly aimed when your vehicle was new. If you regularly carry heavy items in the cargo area or pull a trailer, readjustment may be required. Adjustments should be done by your dealer or another qualified technician.

Replacing a Headlight Bulb

Your vehicle has halogen headlight bulbs. Handle it by its steel base and protect the glass from contact with your skin or hard objects. If you touch the glass, clean it with denatured alcohol and a clean cloth.

NOTICE

Halogen headlight bulbs get very hot when lit. Oil, perspiration, or a scratch on the glass can cause the bulb to overheat and shatter.

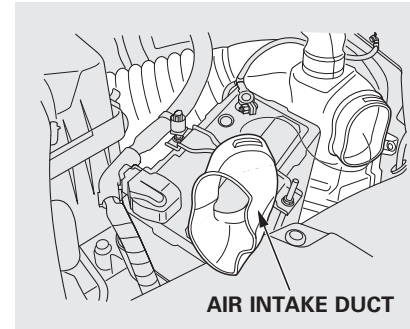

1. Open the hood.

   If you need to change the headlight bulb on the driver's side, remove the front end of the air intake duct by pulling it out.

CONTINUED

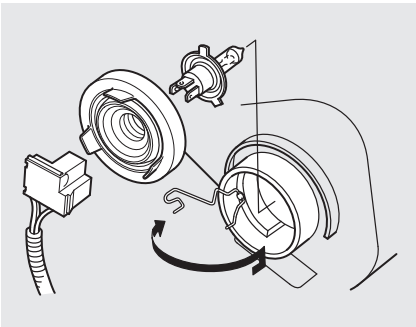

2. Remove the electrical connector from the bulb by pulling the connector straight back.
3. Remove the rubber weather seal by pulling on the tab.
4. Unclip the end of the hold-down wire from its slot. Pivot the wire out of the way, then remove the bulb.
5. Install the new bulb into the hole, making sure the tabs are in their slots. Pivot the hold-down wire back in place, and clip the end into the slot.
6. Install the rubber seal over the back of the headlight assembly. Make sure one of the three arrows on the rubber seal is facing up; it is marked "→".
7. Push the electrical connector onto the new bulb. Make sure it is connected securely. Turn on the headlights to test the new bulb.
8. (Driver's side)
   Install the front end of the air intake duct.

Replacing a Daytime Running Light Bulb

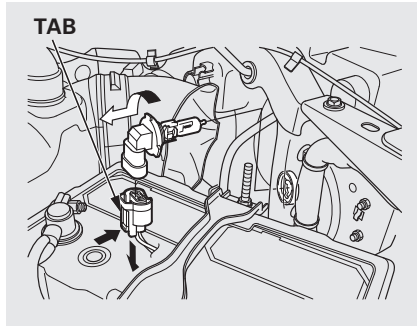

1. Open the hood.
2. Remove the electrical connector from the bulb by pushing on the tab and pulling the connector down.
3. Remove the bulb by turning it one-quarter turn counterclockwise.

4. Insert the new bulb into the hole, and turn it one-quarter turn clockwise to lock it in place.
5. Push the electrical connector back onto the bulb. Make sure it is on all the way.
6. Test the lights to make sure the new bulb is working.

Replacing a Front Parking/Turn Signal Light Bulb

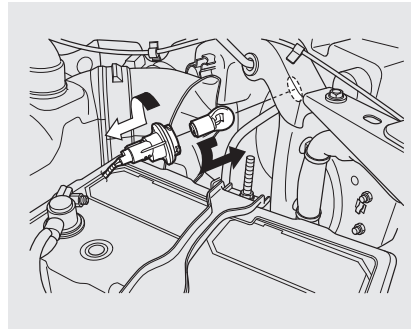

1. Open the hood.
2. Remove the socket from the headlight assembly by turning it one-quarter turn counterclockwise.
3. Remove the bulb from the socket by pushing the bulb in and turning it counterclockwise until it unlocks.
4. Install the new bulb in the socket by pushing the bulb in and turning it clockwise until it locks.
5. Test the lights to make sure the new bulb is working.

CONTINUED

Replacing a Side Turn Signal Bulb

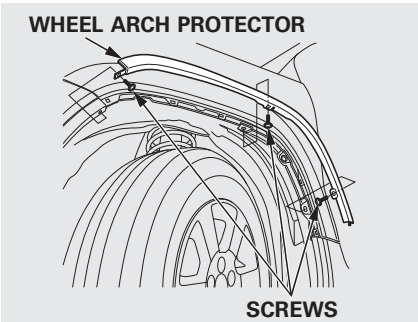

1. If you are changing the bulb on the driver's side, start the engine, turn the steering wheel all the way to the left, and turn off the engine. If you are changing the bulb on the passenger's side, turn the steering wheel to the right.
2. Use a Phillips-head screwdriver to remove the three holding screws, and remove the wheel arch protector from the inner fender.

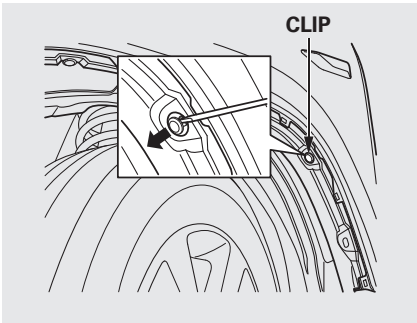

3. Use a flat-tip screwdriver to remove the holding clip from the inner fender.
4. Pull the inner fender cover away from the fender.

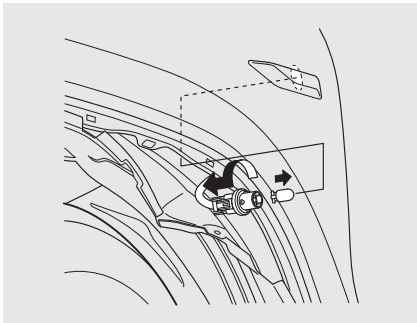

5. Remove the socket from the turn signal assembly by turning it one-quarter turn counterclockwise.
6. Pull the burned out bulb straight out of its socket.
   Push the new bulb straight into the socket until it bottoms.
7. Insert the socket back into the turn signal assembly. Turn it clockwise to lock it in place.
8. Turn on the lights to make sure the new bulb is working.

9. Put the inner fender cover in place.
   Install the holding clip.
   Lock the clip in place by pushing on the center.
   Install the wheel arch protector and tighten the screws securely.

Replacing a Front Side Marker Light Bulb

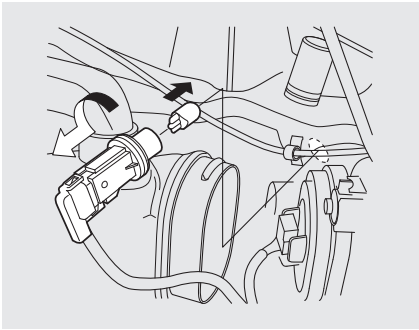

1. Open the hood.

   To change the driver's side, remove the front end of the air intake duct by pulling it out (see page 261).

2. Remove the socket from the light assembly by turning it one-quarter turn counterclockwise.
3. Pull the bulb straight out of its socket. Push the new bulb straight into the socket until it bottoms.
4. Reinstall the socket into the light assembly by turning it clockwise until it locks.
5. Test the lights to make sure the new bulb is working.
6. Install the front end of the air intake duct.

CONTINUED

Replacing Rear Bulbs

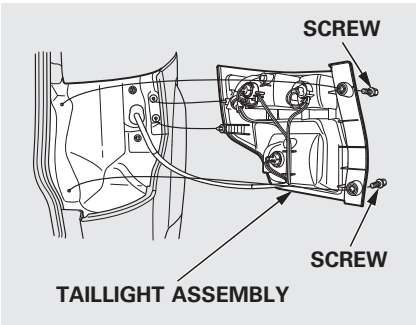

1. Open the hatch and the tailgate. Remove the two mounting screws with a Phillips-head screwdriver, and remove the taillight assembly from the body by pulling it back.
2. Determine which of the four bulbs is burned out: brake/taillight, turn signal light, side marker light, or back-up light.

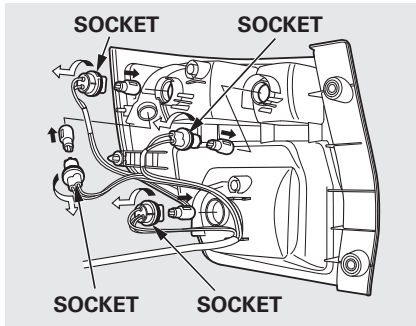

3. Remove the socket by turning it one-quarter turn counterclockwise.
4. Pull the bulb straight out of its socket. Push the new bulb straight into the socket until it bottoms.
5. Reinstall the socket into the light assembly by turning it clockwise until it locks.
6. Test the lights to make sure the new bulb is working.
7. When reinstalling the taillight assembly, first place the two pins in the holes in place. Tighten the two mounting screws.

Replacing a Rear License Plate Bulb

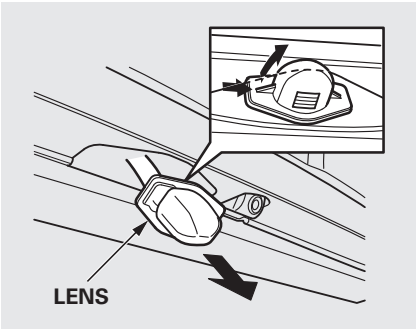

1. Remove the license light assembly by pushing the left edge of the lens toward the right and pulling the assembly out.
2. Pull the bulb straight out of its socket. Push the new bulb in until it bottoms in the socket.

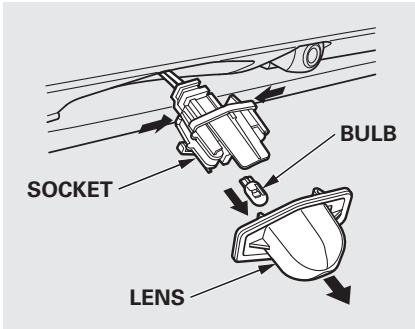

3. Turn on the parking lights and check that the new bulb is working.
4. Put the lens back on the socket until it locks.
5. Slide the right side of the light assembly into the hole. Push on the left side to latch the assembly into place.

Replacing a High-mount Brake Light Bulb

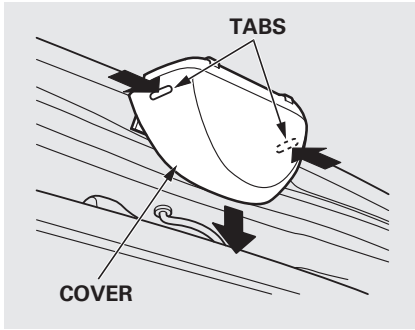

1. Open the hatch. Remove the light assembly cover by pushing in on the tabs on both sides and pulling the cover down.
2. Remove the socket from the light assembly by turning it one-quarter turn counterclockwise.

CONTINUED

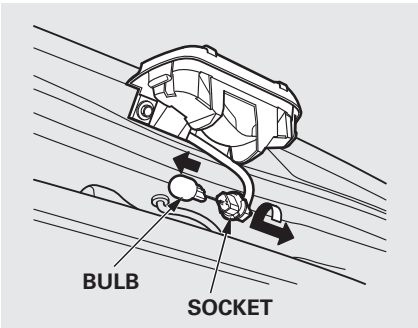

3. Pull the bulb straight out of its socket. Push the new bulb straight into the socket until it bottoms.
4. Press the brake pedal to make sure the new bulb is working.
5. Put the socket back into the light assembly, and turn it clockwise to lock it in place.
6. Put the cover back onto the light assembly. Push it on until it locks in place.

Cleaning the Seat Belts

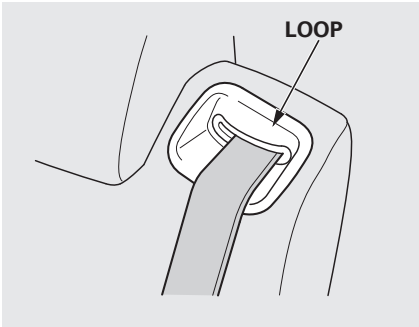

If your seat belts get dirty, use a soft brush with a mixture of mild soap and warm water to clean them. Do not use bleach, dye, or cleaning solvents. Let the belts air-dry before you use the vehicle.
Dirt build-up in the loops of the seat belt anchors can cause the belts to retract slowly. Wipe the insides of the loops with a clean cloth dampened in mild soap and warm water or isopropyl alcohol.

Floor Mats

If equipped

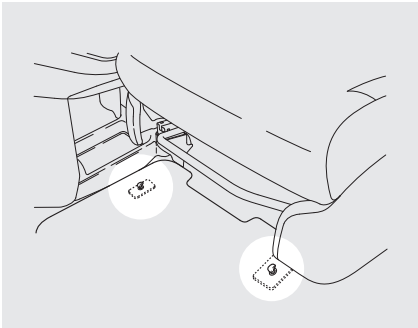

The floor mats that came with your vehicle hook over the floor mat anchors. This keeps the floor mats from sliding forward, possibly interfering with the pedals, or backwards, making the front passenger's weight sensors ineffective.

If you remove the driver's floor mat, make sure to re-anchor it when you put it back in your vehicle.

If you use non-Honda floor mats, make sure they fit properly and that they can be used with the floor mat anchors. Do not put additional floor mats on top of the anchored mats.

Dust and Pollen Filter
This filter removes the dust and pollen that is brought in from the outside through the heating and cooling system.

Have your dealer replace the filter when this service is indicated by a maintenance message on the information display. It should be replaced every 15,000 miles (24,000 km) if you drive primarily in urban areas that have high concentrations of soot in the air, or if the flow from the heating and cooling system becomes less than usual.

Wiper Blades
Check the condition of the wiper blades at least every 6 months. Replace them if you find signs of cracking in the rubber, areas that are getting hard, or if they leave streaks and unwiped areas when used.

1. Front:
   Raise the wiper arm off the windshield.

NOTICE

Do not open the hood when the wiper arms are raised, or you will damage the hood and the arms.

Rear:
Raise the wiper arm off the hatch glass and hold it.

CONTINUED

Wiper Blades

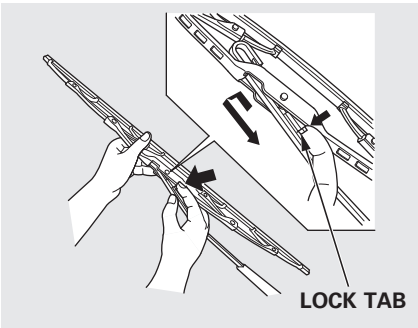

2. Disconnect the blade assembly from the wiper arm by pushing in the lock tab. Hold the lock tab in while you push the blade assembly toward the base of the arm.

   If you are changing the rear wiper blade, go to step 6.

3. Remove the blade from its holder by grabbing the tabbed end of the blade. Pull up firmly until the tabs come out of the holder.

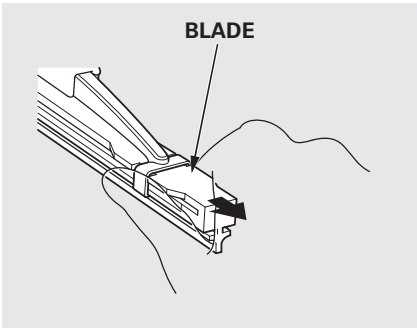

4. Examine the new wiper blades. If they have no plastic or metal reinforcement along the back edge, remove the metal reinforcement strips from the old wiper blade, and install them in the slots along the edge of the new blade.

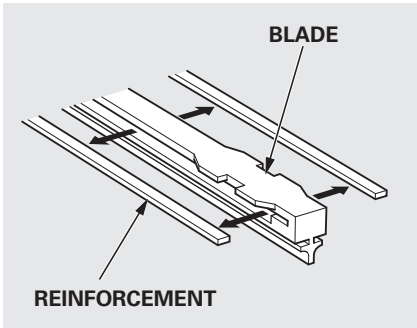

5. Slide the new wiper blade into the holder until the tabs lock.
6. Slide the wiper blade assembly onto the wiper arm. Make sure it locks in place.
7. Lower the wiper arm down against the windshield or the hatch glass.

Wheels

Clean the wheels as you would the rest of the exterior. Wash them with the same solution, and rinse them thoroughly.

If equipped
Aluminum alloy wheels have a protective clear-coat that keeps the aluminum from corroding and tarnishing. Cleaning the wheels with harsh chemicals (including some commercial wheel cleaners) or a stiff brush can damage the clear-coat. To clean the wheels, use a mild detergent and a soft brush or sponge.

Tires

To safely operate your vehicle, your tires must be the proper type and size, in good condition with adequate tread, and correctly inflated.

The following pages give more detailed information on how to take care of your tires and what to do when they need to be replaced.

⚠ WARNING

Using tires that are excessively worn or improperly inflated can cause a crash in which you can be seriously hurt or killed.

Follow all instructions in this owner's manual regarding tire inflation and maintenance.

Inflation Guidelines

Keeping the tires properly inflated provides the best combination of handling, tread life, and riding comfort.

- Underinflated tires wear unevenly, adversely affect handling and fuel economy, and are more likely to fail from being overheated.
- Overinflated tires can make your vehicle ride more harshly, are more prone to damage from road hazards, and wear unevenly.

The tire pressure monitoring system (TPMS) will warn you when a tire pressure is low. See page 227 for more information on the TPMS.

CONTINUED

Tires

Even though your vehicle is equipped with TPMS, we recommend that you visually check your tires every day. If you think a tire might be low, check it immediately with a tire gauge.

Use a gauge to measure the air pressure in each tire at least once a month. Even tires that are in good condition may lose 1 to 2 psi (10 to 20 kPa, 0.1 to 0.2 kgf/cm^2) per month. Remember to check the spare tire at the same time.

Check the air pressures when the tires are cold. This means the vehicle has been parked for at least 3 hours, or driven less than 1 mile (1.6 km). Add or release air, if needed, to match the recommended cold tire pressures.

If you check air pressures when the tires are hot [driven for several miles (kilometers)], you will see readings 4 to 6 psi (30 to 40 kPa, 0.3 to 0.4 kgf/cm^2) higher than the cold readings. This is normal. Do not let air out to match the recommended cold air pressure. The tire will be underinflated.

You should get your own tire pressure gauge and use it whenever you check your tire pressures. This will make it easier for you to tell if a pressure loss is due to a tire problem and not due to a variation between gauges.

While tubeless tires have some ability to self-seal if they are punctured, you should look closely for punctures if a tire starts losing pressure.

Recommended Tire Pressures

The following chart shows the recommended cold tire pressures for most normal and high-speed driving conditions.

On all models except SC

Tire Size	Cold Tire Pressure for Normal Driving
P215/70R16 99S	Front: 33 psi (230 kPa, 2.3 kgf/cm^2) Rear: 35 psi (240 kPa, 2.4 kgf/cm^2)

On SC model

Tire Size	Cold Tire Pressure for Normal Driving
P225/55R18 97H	Front/Rear: 32 psi (220 kPa, 2.2 kgf/cm^2)

The compact spare tire pressure is:
60 psi (420 kPa, 4.2 kgf/cm²)

For convenience, the recommended tire sizes and cold tire pressures are on a label on the driver's doorjamb.

For additional technical information about your tires, see page 311.

Tire Inspection
Every time you check inflation, you should also examine the tires for damage, foreign objects, and wear.

You should look for:

- Bumps or bulges in the tread or side of the tire. Replace the tire if you find either of these conditions.
- Cuts, splits, or cracks in the side of the tire. Replace the tire if you can see fabric or cord.
- Excessive tread wear.

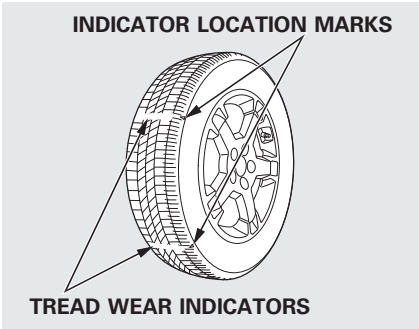

Your tires have wear indicators molded into the tread. When the tread wears down, you will see a 1/2 inch (12.7 mm) wide band across the tread. This shows there is less than 1/16 inch (1.6 mm) of tread left on the tire.

A tire this worn gives very little traction on wet roads. You should replace the tire if you can see three or more tread wear indicators.

Tire Service Life
The service life of your tires is dependent on many factors, including, but not limited to, driving habits, road conditions, vehicle loading, inflation pressure, maintenance history, speed, and environmental conditions (even when the tires are not in use).
In addition to your regular inspections and inflation pressure maintenance, it is recommended that you have annual inspections performed once the tires reach five years old. It is also recommended that all tires, including the spare, be removed from service after 10 years from the date of manufacture, regardless of their condition or state of wear.
The last four digits of the TIN (tire identification number) are found on the sidewall of the tire and indicate the date of manufacture (See **Tire Labeling** on page 313).

CONTINUED

Tire Maintenance

In addition to proper inflation, correct wheel alignment helps to decrease tire wear. If you find a tire is worn unevenly, have your dealer check the wheel alignment.

Have your dealer check the tires if you feel a consistent vibration while driving. A tire should always be rebalanced if it is removed from the wheel. When you have new tires installed, make sure they are balanced. This increases riding comfort and tire life. For best results, have the installer perform a dynamic balance.

NOTICE

On vehicles with aluminum wheels, improper wheel weights can damage your vehicle's aluminum wheels. Use only Honda wheel weights for balancing.

Tire Rotation

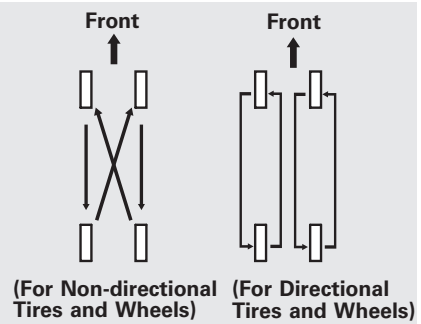

To help increase tire life and distribute wear more evenly, rotate the tires according to the maintenance messages displayed on the information display.
Move the tires to the positions shown in the illustration each time they are rotated. If you purchase directional tires, rotate only front-to-back.

Replacing Tires and Wheels

Replace your tires with radial tires of the same size, load range, speed rating, and maximum cold tire pressure rating (as shown on the tire's sidewall).

Mixing radial and bias-ply tires on your vehicle can reduce braking ability, traction, and steering accuracy. Using tires of a different size or construction can cause the ABS and vehicle stability assist system (VSA) to work inconsistently.

ABS and VSA system work by comparing the speed of the wheels. When replacing tires, use the same size originally supplied with the vehicle. Tire size and construction can affect wheel speed and may cause the ABS or VSA system to activate.

It is best to replace all four tires at the same time. If that is not possible or necessary, replace the two front tires or two rear tires as a pair. Replacing just one tire can seriously affect your vehicle's handling.

If you ever replace a wheel, make sure that the wheel's specifications match those of the original wheels.

Also be sure you use only TPMS specific wheels. If you do not, the tire pressure monitoring system will not work.

Replacement wheels are available at your dealer.

⚠WARNING

Installing improper tires on your vehicle can affect handling and stability. This can cause a crash in which you can be seriously hurt or killed.

Always use the size and type of tires recommended in this owner's manual.

Wheel and Tire Specifications

Wheels:

(On all models except SC)
16 x 6 1/2JJ

(On SC model)
18 x 7JJ

Tires:

(On all models except SC)
P215/70R16 99S

(On SC model)
P225/55R18 97H

See page 311 for DOT tire quality grading information, and page 313 for tire size and labeling information.

Winter Driving

Tires marked “M + S” or “All Season” on the sidewall have an all-weather tread design suitable for most winter driving conditions.
For the best performance in snowy or icy conditions, you should install snow tires or tire chains. They may be required by local laws under certain conditions.

Snow Tires

If you mount snow tires on your vehicle, make sure they are radial tires of the same size and load range as original tires. Mount snow tires on all four wheels. The traction provided by snow tires on dry roads may be lower than your original tires. Check with the tire dealer for maximum speed recommendations.

CONTINUED

Tire Chains

Mount tire chains on your tires when required by driving conditions or local laws. Install them only on the front tires.

On all models except SC

Because your vehicle has limited tire clearance, use only SAE Class “S” cable-type traction devices, with rubber chain tensioners, on the front tires. Use traction devices only when required by driving conditions or local laws. Make sure they are the correct size for your tires. Metal link-type “chains” should not be used.

NOTICE

Traction devices that are the wrong size or improperly installed can damage your vehicle's brake lines, suspension, body, and wheels. Stop driving if they are hitting any part of the vehicle.

On SC model

Because your vehicle has limited tire clearance, Honda strongly recommends using the chains listed below, made by Security Chain Company (SCC).

Cable-type: SCC Super Z6 SZ 139

When installing cables, follow the manufacturer's instructions, and mount them as tight as you can. Make sure they are not contacting the brake lines or suspension. Drive slowly with them installed. If you hear them coming into contact with the body or chassis, stop and investigate. Remove them as soon as you begin driving on cleared roads.

⚠ WARNING

Using the wrong chains, or not properly installing chains, can damage the brake lines and cause a crash in which you can be seriously injured or killed.

Follow all instructions in this owner's manual regarding the selection and use of tire chains.

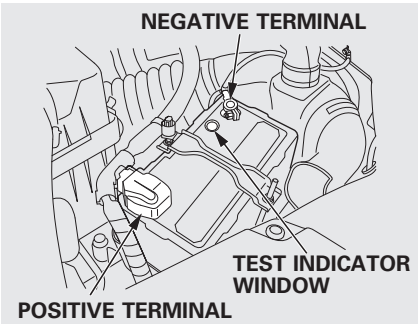

Check the condition of the battery monthly by looking at the test indicator window. The label on the battery explains the test indicator's colors.

Check the terminals for corrosion (a white or yellowish powder). To remove it, cover the terminals with a solution of baking soda and water. It will bubble up and turn brown. When this stops, wash it off with plain water. Dry off the battery with a cloth or paper towel. Coat the terminals with grease to help prevent future corrosion.

If additional battery maintenance is needed, see your dealer or a qualified technician.

WARNING: Battery posts, terminals, and related accessories contain lead and lead compounds. **Wash your hands after handling.**

If you need to connect the battery to a charger, disconnect both cables to prevent damaging your vehicle's electrical system. Always disconnect the negative (−) cable first, and reconnect it last.

If your vehicle's battery is disconnected, or goes dead, the time setting may be lost. To reset the time, see page 189.

⚠WARNING

The battery gives off explosive hydrogen gas during normal operation.

A spark or flame can cause the battery to explode with enough force to kill or seriously hurt you.

Wear protective clothing and a face shield, or have a skilled technician do the battery maintenance.

On EX and SC models
If your vehicle's battery is disconnected or goes dead, the audio system may disable itself. The next time you turn on the radio, you will see “ENTER CODE” in the frequency display. Use the preset buttons to enter the code (see page 188).

CONTINUED

On vehicles with navigation system
The navigation system will also disable itself. The next time you turn on the ignition switch, the system will require you to enter a PIN before it can be used. Refer to the navigation system manual.

Vehicle Storage
If you need to park your vehicle for an extended period (more than 1 month), there are several things you should do to prepare it for storage. Proper preparation helps prevent deterioration and makes it easier to get your vehicle back on the road. If possible, store your vehicle indoors.

- Fill the fuel tank.
- Wash and dry the exterior completely.
- Clean the interior. Make sure the carpeting, floor mats, etc., are completely dry.
- Leave the parking brake off. Put the transmission in reverse (manual) or Park (automatic).
- Block the rear wheels.
- If the vehicle is to be stored for a longer period, it should be supported on jackstands so the tires are off the ground.
- Leave one window open slightly (if the vehicle is being stored indoors).
- Disconnect the battery.
- Support the front and rear wiper blade arms with a folded towel or rag so they do not touch the windshield.
- To minimize sticking, apply a silicone spray lubricant to all door and tailgate seals. Also, apply a vehicle body wax to the painted surfaces that mate with the door and tailgate seals.

- Cover the vehicle with a “breathable” cover, one made from a porous material such as cotton. Non-porous materials, such as plastic sheeting, trap moisture, which can damage the paint.
- If possible, periodically run the engine until it reaches full operating temperature (the cooling fans cycle on and off twice). Preferably, do this once a month.

This section covers the more common problems that motorists experience with their vehicles. It gives you information about how to safely evaluate the problem and what to do to correct it. If the problem has stranded you on the side of the road, you may be able to get going again. If not, you will also find instructions on getting your vehicle towed.

Compact Spare Tire 282
Changing a Flat Tire 283
If the Engine Won't Start..... 289
Jump Starting..... 291
If the Engine Overheats 293
Low Oil Pressure Indicator 295
Charging System Indicator 295
Malfunction Indicator Lamp..... 296
Brake System Indicator..... 297
Fuses 298
Fuse Locations..... 301
Emergency Towing..... 303

Compact Spare Tire

Use the compact spare tire as a temporary replacement only. Get your regular tire repaired or replaced, and put it back on your vehicle as soon as you can.

Check the inflation pressure of the compact spare tire every time you check the other tires. It should be inflated to:
60 psi (420 kPa, 4.2 kgf/cm^2)

Follow these precautions:

- Never exceed 50 mph (80 km/h).
- This tire gives a harsher ride and less traction on some road surfaces. Use greater caution while driving.
- Do not mount snow chains on the compact spare tire.
- Do not use your compact spare tire on another vehicle unless it is the same make and model.
- The low tire pressure indicator comes on and stays on after you replace the flat tire with the compact spare tire. After several miles (kilometers) driving with the compact spare tire, the TPMS indicator comes on and the low tire pressure indicator goes off.

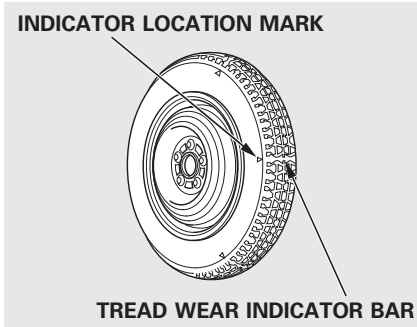

Replace the tire when you can see the tread wear indicator bars. The replacement should be the same size and design tire, mounted on the same wheel. The spare tire is not designed to be mounted on a regular wheel, and the spare wheel is not designed for mounting a regular tire.

If you have a flat tire while driving, stop in a safe place to change it. Drive slowly along the shoulder until you get to an exit or an area to stop that is far away from the traffic lanes.

⚠WARNING

The vehicle can easily roll off the jack, seriously injuring anyone underneath.

Follow the directions for changing a tire exactly, and never get under the vehicle when it is supported only by the jack.

1. Park the vehicle on firm, level, and non-slippery ground. Put the transmission in Park (automatic) or reverse (manual). Apply the parking brake.

   If you are towing a trailer, unhitch the trailer.

2. Turn on the hazard warning lights, and turn the ignition switch to the LOCK (0) position. Have all passengers get out of the vehicle while you change the tire.

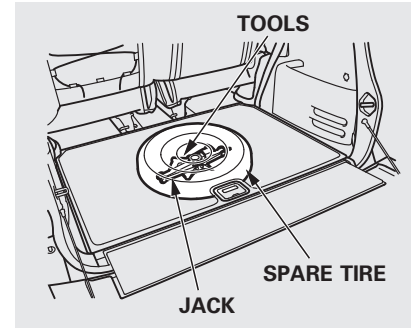

3. Open the hatch and the tailgate.
4. The spare tire, jack, and tools are under the cargo area floor.

CONTINUED

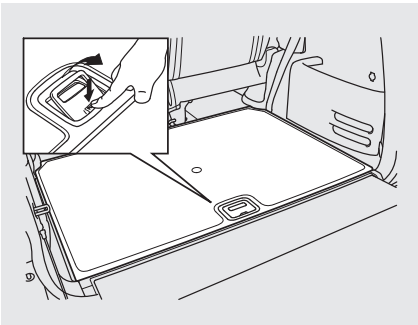

5. Push the rear edge of the handle to raise the handle loop and pull up the loop to raise the cargo area floor.

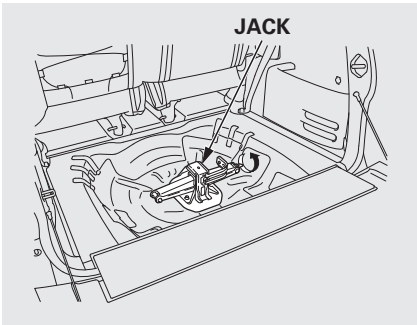

6. Unscrew the wing bolt, and take the spare tire out of the cargo area.
7. Remove the tools and the jack. To remove the jack, turn the jack's end bracket counterclockwise to loosen it.

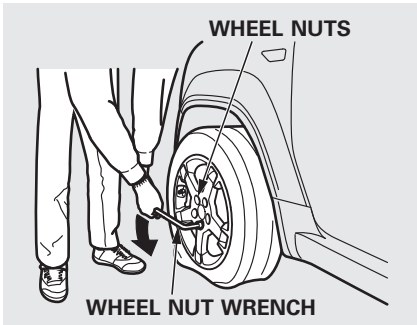

8. Loosen the five wheel nuts 1/2 turn with the wheel nut wrench.

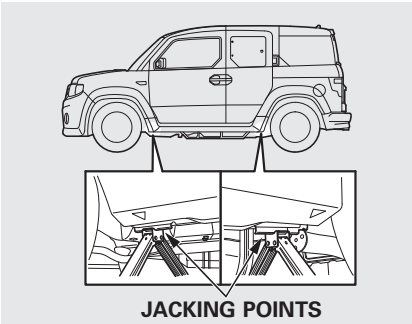

9. Locate the jacking point nearest the tire you need to change. It is pointed to by an arrow molded into the underside of the body. Place the jack under the jacking point. Turn the end bracket clockwise until the top of the jack contacts the jacking point. Make sure the jacking point tab is resting in the jack notch.

10. Use the extension and the wheel nut wrench as shown to raise the vehicle until the flat tire is off the ground.

11. Remove the wheel nuts, then remove the flat tire. Handle the wheel nuts carefully; they may be hot from driving. Place the flat tire on the ground with the outside surface facing up.

CONTINUED

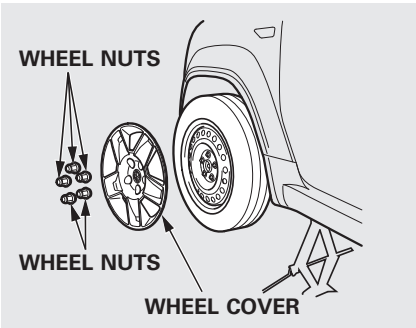

On LX model
Do not attempt to forcibly pry the wheel cover off with a screwdriver or other tool. The wheel cover cannot be removed without first removing the wheel nuts.

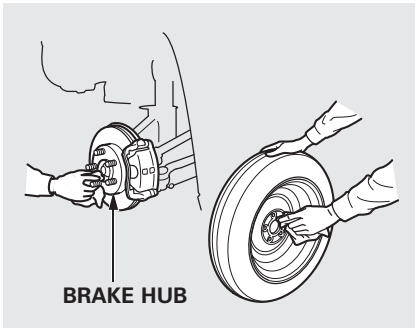

12. Before mounting the spare tire, wipe any dirt off the mounting surface of the wheel and hub with a clean cloth. Wipe the hub carefully; it may be hot from driving.

13. Put on the spare tire. Put the wheel nuts back on finger-tight, then tighten them in a crisscross pattern with the wheel nut wrench until the wheel is firmly against the hub. Do not try to tighten the wheel nuts fully.

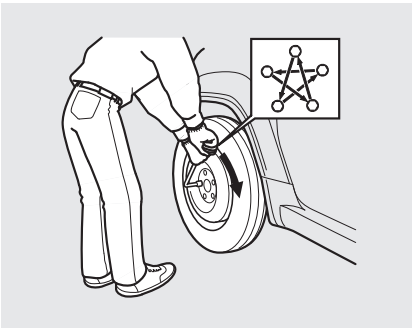

14. Lower the vehicle to the ground, and remove the jack.
15. Tighten the wheel nuts securely in the same crisscross pattern. Have the wheel nut torque checked at the nearest automotive service facility.
    Tighten the wheel nuts to:
    80 lbf·ft (108 N·m, 11 kgf·m)
16. Store the jack in its holder. Turn the jack's end bracket to lock it in place. Store the tools.
17. Remove the center cap (if equipped) from the flat tire, and store it in the spare tire well.

⚠ WARNING

Loose items can fly around the interior in a crash and could seriously injure the occupants.

Store the wheel, jack, and tools securely before driving.

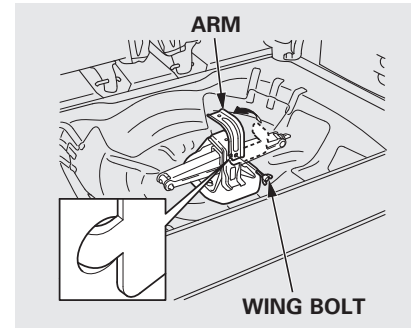

18. Remove the wing bolt on the spare tire mount, and pivot the arm 90° to the upright position. Then tighten the wing bolt securely.

CONTINUED

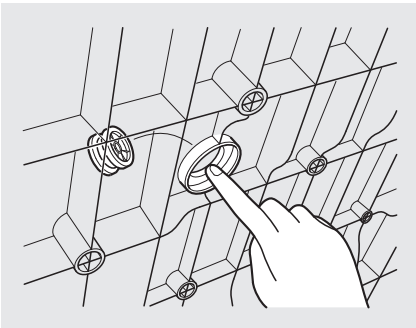

19. Remove the small round plug from the cargo area floor by pushing it from the back side to make a hole. Store the removed plug in a place you can easily remember.

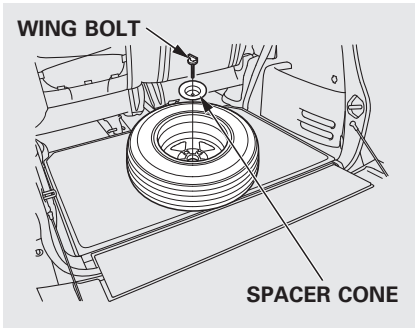

20. Reinstall the cargo area floor. Place the flat tire face down on the cargo area floor.
21. Align the center of the flat tire with the hole in the cargo area floor. Remove the spacer cone from the wing bolt, turn it over, and put it back on the bolt.
22. Secure the flat tire by screwing the wing bolt to the spare tire mount through the hole in the cargo area floor.
23. Your vehicle's original tire has a tire pressure monitoring system sensor. To replace a tire, refer to Changing a Tire with TPMS (see page 228).

Diagnosing why the engine won't start falls into two areas, depending on what you hear when you turn the ignition switch to the START (III) position:

- You hear nothing, or almost nothing. The engine's starter motor does not operate at all, or operates very slowly.
- You can hear the starter motor operating normally, or the starter motor sounds like it is spinning faster than normal, but the engine does not start up and run.

Nothing Happens or the Starter Motor Operates Very Slowly

When you turn the ignition switch to the START (III) position, you do not hear the normal noise of the engine trying to start. You may hear a clicking sound, a series of clicks, or nothing at all.

Check these things:

- Check the transmission interlock. If you have a manual transmission, the clutch pedal must be pushed all the way to the floor or the starter will not operate. With an automatic transmission, the shift lever must be in Park or neutral.
- Turn the ignition switch to the ON (II) position. Turn on the headlights, and check their brightness. If the headlights are very dim or do not come on at all, the battery is discharged (see **Jump Starting** on page 291).
- Turn the ignition switch to the START (III) position. If the headlights do not dim, check the condition of the fuses. If the fuses are OK, there is probably something wrong with the electrical circuit for the ignition switch or starter motor. You will need a qualified technician to determine the problem. See **Emergency Towing** on page 303.

If the headlights dim noticeably or go out when you try to start the engine, either the battery is discharged or the connections are corroded. Check the condition of the battery and terminal connections (see page 277). You can then try jump starting the vehicle from a booster battery (see page 291).

CONTINUED

The Starter Operates Normally
In this case, the starter motor's speed sounds normal, or even faster than normal, when you turn the ignition switch to the START (III) position, but the engine does not run.

- Are you using a properly coded key? An improperly coded key will cause the immobilizer system indicator in the instrument panel to blink rapidly (see page 60).
- Are you using the proper starting procedure? Refer to **Starting the Engine** on page 216.
- Do you have fuel? Check the fuel gauge; the low fuel indicator may not be working.
- There may be an electrical problem, such as no power to the fuel pump. Check all the fuses (see page 298).

If you find nothing wrong, you will need a qualified technician to find the problem (see **Emergency Towing** on page 303).

Although this seems like a simple procedure, you should take several precautions.

⚠WARNING

A battery can explode if you do not follow the correct procedure, seriously injuring anyone nearby.

Keep all sparks, open flames, and smoking materials away from the battery.

You cannot start your vehicle with an automatic transmission by pushing or pulling it.

To Jump Start Your Vehicle:

1. Open the hood, and check the physical condition of the battery. In very cold weather, check the condition of the electrolyte. If it seems slushy or frozen, do not try jump starting until it thaws.

NOTICE

If a battery sits in extreme cold, the electrolyte inside can freeze. Attempting to jump start with a frozen battery can cause it to rupture.

2. Turn off all the electrical accessories: heater, A/C, audio system, lights, etc. Put the transmission in neutral (manual) or Park (automatic), and set the parking brake.

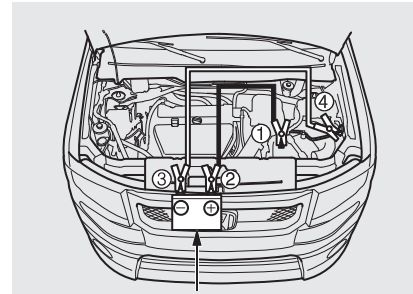

BOOSTER BATTERY

The numbers in the illustration show you the order to connect the jumper cables.

CONTINUED

Jump Starting

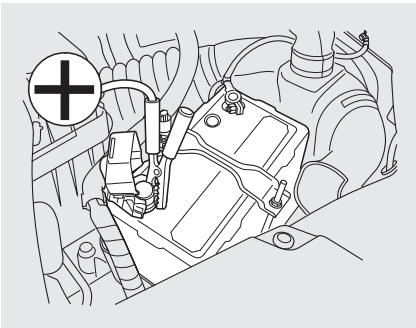

3. Connect one jumper cable to the positive (+) terminal on your battery. Connect the other end to the positive (+) terminal on the booster battery.

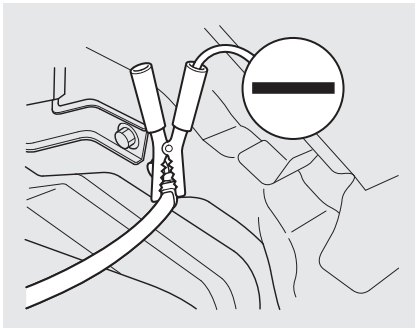

4. Connect the second jumper cable to the negative (−) terminal on the booster battery. Connect the other end to the grounding strap on your vehicle as shown. Do not connect this jumper cable to any other part of the engine.

5. If the booster battery is in another vehicle, have an assistant start that vehicle and run it at a fast idle.
6. Start your vehicle. If the starter motor still operates slowly, check that the jumper cables have good metal-to-metal contact.
7. Once your vehicle is running, disconnect the negative cable from your vehicle, then from the booster battery. Disconnect the positive cable from your vehicle, then from the booster battery.

Keep the ends of the jumper cables away from each other and any metal on the vehicle until everything is disconnected. Otherwise, you may cause an electrical short.

The pointer of the vehicle's temperature gauge should stay in the midrange. If it climbs to the red mark, you should determine the reason (hot day, driving up a steep hill, etc.).

If the vehicle overheats, you should take immediate action. The only indication may be the temperature gauge climbing to or above the red mark. Or you may see steam or spray coming from under the hood.

NOTICE

Driving with the temperature gauge pointer at the red mark can cause serious damage to the engine.

⚠ WARNING

Steam and spray from an overheated engine can seriously scald you.

Do not open the hood if steam is coming out.

1. Safely pull to the side of the road. Put the transmission in neutral (manual) or Park (automatic), and set the parking brake. Turn off all the accessories, and turn on the hazard lights.
2. If you see steam and/or spray coming from under the hood, turn off the engine. Wait until you see no more signs of steam or spray, then open the hood.
3. If you do not see steam or spray, leave the engine running and watch the temperature gauge. If the high heat is due to overloading, the engine should start to cool down almost immediately. If it does, wait until the temperature gauge comes down to the midpoint, then continue driving.
4. If the temperature gauge stays at the red mark, turn off the engine.

CONTINUED

If the Engine Overheats

5. Look for any obvious coolant leaks, such as a split radiator hose. Everything is still extremely hot, so use caution. If you find a leak, it must be repaired before you continue driving (see **Emergency Towing** on page 303).
6. If you don't find an obvious leak, check the coolant level in the radiator reserve tank. Add coolant if the level is below the MIN mark.
7. If there was no coolant in the reserve tank, you may need to add coolant to the radiator. Let the engine cool down until the pointer reaches the middle of the temperature gauge or lower before checking the radiator.

⚠ WARNING

Removing the radiator cap while the engine is hot can cause the coolant to spray out, seriously scalding you.

Always let the engine and radiator cool down before removing the radiator cap.

8. Using gloves or a large heavy cloth, turn the radiator cap counterclockwise, without pushing down, to the first stop. After the pressure releases, push down on the cap, and turn it until it comes off.
9. Start the engine, and set the temperature control dial to maximum heat. Add coolant to the radiator up to the base of the filler neck. If you do not have the proper coolant mixture available, you can add plain water. Remember to have the cooling system drained and refilled with the proper mixture as soon as you can.
10. Put the radiator cap back on tightly. Run the engine, and check the temperature gauge. If it goes back to the red mark, the engine needs repair (see **Emergency Towing** on page 303).
11. If the temperature stays normal, check the coolant level in the radiator reserve tank. If it has gone down, add coolant to the MAX mark. Put the cap back on tightly.

Low Oil Pressure Indicator

This indicator should never come on when the engine is running. If it starts flashing or stays on, the oil pressure has dropped very low or lost pressure. Serious engine damage is possible, and you should take immediate action.

NOTICE

Running the engine with low oil pressure can cause serious mechanical damage almost immediately. Turn off the engine as soon as you can safely get the vehicle stopped.

1. Safely pull off the road, and shut off the engine. Turn on the hazard warning lights.
2. Let the vehicle sit for a minute. Open the hood, and check the oil level (see page 201). An engine very low on oil can lose pressure during cornering and other driving maneuvers.
3. If necessary, add oil to bring the level back to the full mark on the dipstick (see page 251).
4. Start the engine, and watch the oil pressure indicator. If it does not go out within 10 seconds, turn off the engine. There is a mechanical problem that needs to be repaired before you can continue driving (see **Emergency Towing** on page 303).

Charging System Indicator

If the charging system indicator comes on brightly when the engine is running, the battery is not being charged.

Immediately turn off all electrical accessories. Try not to use other electrically operated controls such as the power windows. Keep the engine running; starting the engine will discharge the battery rapidly.

Go to a service station or garage where you can get technical assistance.

Malfunction Indicator Lamp

If this indicator comes on while driving, it means one of the engine's emissions control systems may have a problem. Even though you may feel no difference in your vehicle's performance, it can reduce your fuel economy and cause increased emissions. Continued operation may cause serious damage.

If you have recently refueled your vehicle, the indicator coming on could be due to a loose or missing fuel fill cap. You will also see a "CHECK FUEL CAP" message on the information display. Tighten the cap until it clicks at least once. Tightening the cap will not turn the indicator off immediately; it can take several days of normal driving.

If the indicator comes on repeatedly, even though it may turn off as you continue driving, have your vehicle checked by your dealer as soon as possible.

NOTICE

If you keep driving with the malfunction indicator lamp on, you can damage your vehicle's emissions controls and engine. Those repairs may not be covered by your vehicle's warranties.

If your vehicle has an automatic transmission, the malfunction indicator lamp may also come on with the "D" indicator.

Readiness Codes

Your vehicle has certain "readiness codes" that are part of the on-board diagnostics for the emissions systems. In some states, part of the emissions testing is to make sure these codes are set. If they are not set, the test cannot be completed.

If the battery in your vehicle has been disconnected or gone dead, these codes may be erased. It can take several days of driving under various conditions to set the codes again.

To check if they are set, turn the ignition switch to the ON (II) position, without starting the engine. The malfunction indicator lamp will come on for 20 seconds. If it then goes off, the readiness codes are set. If it blinks five times, the readiness codes are not set. If possible, do not take your vehicle for an emissions test until the readiness codes are set. Refer to **Emissions Testing** for more information (see page 319).

Brake System Indicator (Red)

U.S. Canada

The brake system indicator (red) normally comes on when you turn the ignition switch to the ON (II) position, and as a reminder to check the parking brake. It will stay on if you do not fully release the parking brake.

If the brake system indicator (red) comes on while driving, the brake fluid level is probably low. Press lightly on the brake pedal to see if it feels normal. If it does, check the brake fluid level the next time you stop at a service station (see page 258).

If the fluid level is low, take your vehicle to a dealer, and have the brake system inspected for leaks or worn brake pads.

However, if the brake pedal does not feel normal, you should take immediate action. A problem in one part of the system's dual circuit design will still give you braking at two wheels. You will feel the brake pedal go down much farther before the vehicle begins to slow down, and you will have to press harder on the pedal.

Slow down by shifting to a lower gear, and pull to the side of the road when it is safe. Because of the long distance needed to stop, it is hazardous to drive the vehicle. You should have it towed and repaired as soon as possible (see **Emergency Towing** on page 303).

If you must drive the vehicle a short distance in this condition, drive slowly and carefully.

If the ABS indicator and the VSA system indicator come on with the brake system indicator, have your vehicle inspected by your dealer immediately.

Fuses

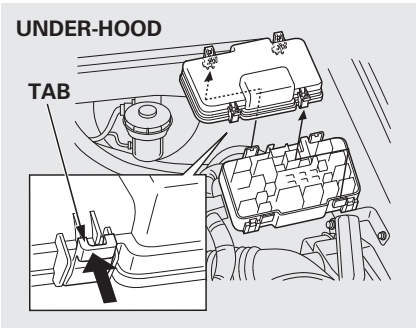

The vehicle's fuses are located in two fuse boxes. The under-hood fuse box is located in the engine compartment on the driver's side. To open it, push the tabs as shown.

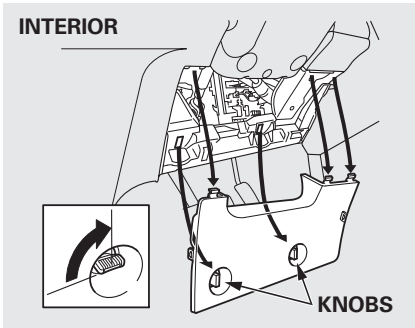

The interior fuse box is underneath the steering column. To remove the fuse box lid, turn the knobs clockwise and pull the lid out of its hinges.

Checking and Replacing Fuses

If something electrical in your vehicle stops working, check for a blown fuse first. Determine from the chart on pages 301 and 302, or the diagram on the fuse box lid, which fuse or fuses control that device. Check those fuses first, but check all the fuses before deciding that a blown fuse is the cause. Replace any blown fuses, and check if the device works.

1. Turn the ignition switch to the LOCK (0) position. Make sure the headlights and all other accessories are off.
2. Remove the cover from the fuse box.

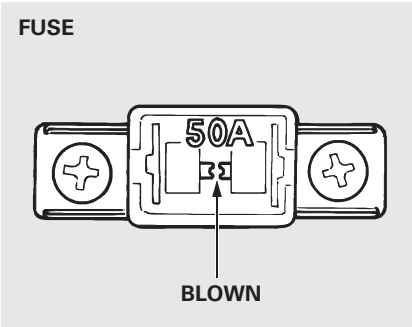

3. Check each of the large fuses in the under-hood fuse boxes by looking through the top at the wire inside. Removing these fuses requires a Phillips-head screwdriver.

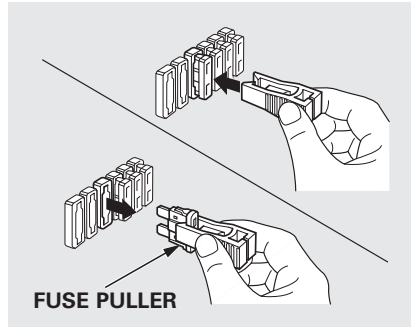

4. Check the smaller fuses in the under-hood fuse box and all the fuses in the interior fuse box by pulling out each one with the fuse puller provided in the under-hood fuse box.

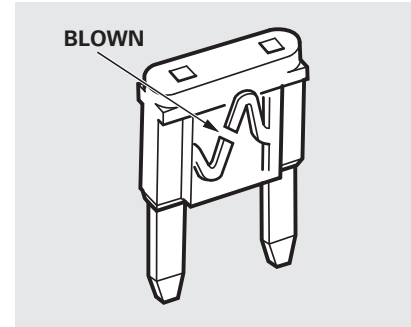

5. Look for a blown wire inside the fuse. If it is blown, replace it with one of the spare fuses of the same rating or lower.

CONTINUED

If you cannot drive the vehicle without fixing the problem, and you do not have a spare fuse, take a fuse of the same rating or a lower rating from one of the other circuits. Make sure you can do without that circuit temporarily (such as the accessory power socket or radio).

If you replace the blown fuse with a spare fuse that has a lower rating, it might blow out again. This does not indicate anything wrong. Replace the fuse with one of the correct rating as soon as you can.

NOTICE

Replacing a fuse with one that has a higher rating greatly increases the chances of damaging the electrical system. If you do not have a replacement fuse with the proper rating for the circuit, install one with a lower rating.

6. If the replacement fuse of the same rating blows in a short time, there is probably a serious electrical problem in your vehicle. Leave the blown fuse in that circuit and have your vehicle checked by a qualified technician.

On EX and SC models
If the radio fuse is removed, the audio system will disable itself. The next time you turn on the radio you will see “ENTER CODE” in the frequency display. Use the preset buttons to enter the specific digit code (see page 188).

On vehicles with navigation system
If the navigation system fuse is removed, the navigation system will disable itself. The next time you turn on the ignition switch, the system will require you to enter a PIN before it can be used. Refer to the navigation system manual.

INTERIOR FUSE BOX

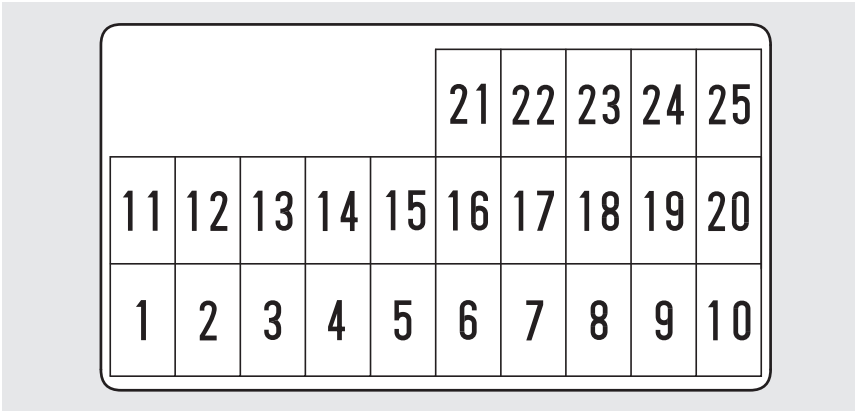

No.	Amps.	Circuits Protected
1	–	Not Used
2	10 A	Rear Accessory Power Socket
3	10 A	Daytime Running Lights/ TPMS
4	10 A	ACG
5	–	Not Used

No.	Amps.	Circuits Protected
6	7.5 A	Power Window Relay
7	20 A	AMP*
8	7.5 A	Accessory, Radio
9	10 A	Rear Wiper
10	7.5 A	Meter
11	–	Not Used

No.	Amps.	Circuits Protected
12	7.5 A	Daytime Running Lights
13	10 A	SRS
14	10 A	Remote Control Mirrors
15	20 A	LAF Heater
16	15 A	Ignition Relay
17	15 A	Fuel Pump
18	15 A	Front Accessory Power Socket
19	7.5 A	Turn Signal Lights
20	20 A	Front Wiper
21	–	Not Used
22	20 A	Passenger's Power Window
23	20 A	Driver's Power Window
24	–	Not Used
25	–	Not Used

*: If equipped

CONTINUED

Fuse Locations

UNDER-HOOD FUSE BOX

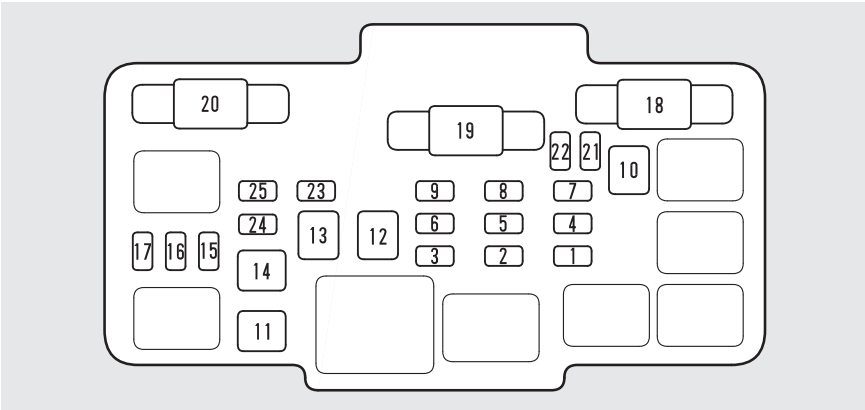

No.	Amps.	Circuits Protected
1	30 A	Condenser Fan
2	15 A	Small Light
3	7.5 A	Interior Light
4	20 A	Cooling Fan Motor
5	15 A	Hazard
6	15 A	FI ECU

No.	Amps.	Circuits Protected
7	15 A	Horn, Stop
8	15 A	DBW
9	10 A	Back Up
10	30 A	VSA Motor
11	20 A	Rear Defroster
12	40 A	Heater Motor

No.	Amps.	Circuits Protected
13	40 A	Power Window Main
14	40 A	Option
15	15 A	Left Headlight
16	15 A	Door Lock
17	15 A	Right Headlight
18	30 A	VSA F/S
19	100 A	Battery
20	50 A	IG1 Main
21 – 25	7.5 A – 30 A	Spare Fuses

If your vehicle needs to be towed, call a professional towing service or organization. Never tow your vehicle with just a rope or chain. It is very dangerous.

The only way you can safely tow your vehicle is with flat-bed equipment. The operator will load your vehicle on the back of a truck. Any other method of towing will damage the drive system. When you contact the towing agency, inform them a flat-bed is required.

4WD models only

NOTICE

Towing with only two tires on the ground will damage parts of the 4WD system. It should be transported on a flat-bed truck or trailer.

The diagrams in this section give you the dimensions and capacities of your vehicle and the locations of the identification numbers. It also includes information you should know about your vehicle's tires and emissions control systems.

Identification Numbers 306
Specifications 308
DOT Tire Quality Grading (U.S. Vehicles) 311
Uniform Tire Quality Grading 311
Treadwear 311
Traction 311
Temperature 312
Tire Labeling 313
Tire Pressure Monitoring System (TPMS) – Required Federal Explanation 314
Emissions Controls 316
The Clean Air Act 316
Crankcase Emissions Control System 316
Evaporative Emissions Control System 316
Onboard Refueling Vapor Recovery 316
Exhaust Emissions Controls 317
Three Way Catalytic Converter 318
Emissions Testing 319

Identification Numbers

Your vehicle has several identifying numbers located in various places.

The vehicle identification number (VIN) is the 17-digit number your dealer uses to register your vehicle for warranty purposes. It is also necessary for licensing and insuring your vehicle. The easiest place to find the VIN is on a plate fastened to the top of the dashboard. You can see it by looking through the windshield on the driver's side. It is also on the certification label attached to the driver's doorjamb (front edge of rear door), and is stamped on the engine compartment bulkhead. The VIN is also provided in bar code on the certification label.

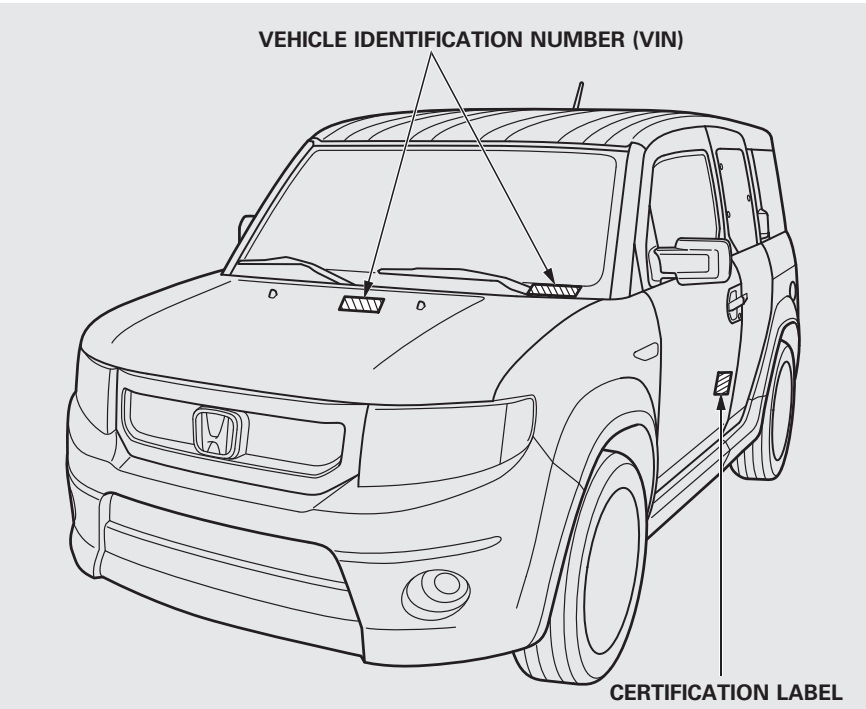

The engine number is stamped into the engine block.

The transmission number is on a label on top of the transmission.

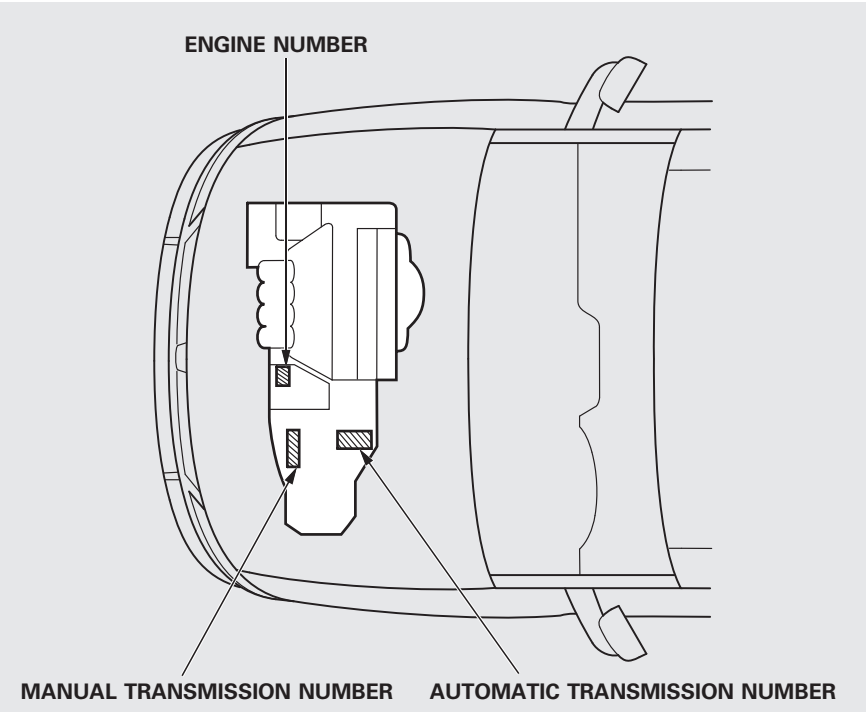

Specifications

Dimensions

Length		169.9 in (4,316 mm)*1*2 170.4 in (4,328 mm)*3
Width		71.6 in (1,819 mm)
Height		70.4 in (1,788 mm)*1,*2 69.6 in (1,768 mm)*3
Wheelbase		101.4 in (2,575 mm)
Track	Front	62.1 in (1,577 mm)*1,*2 62.1 in (1,578 mm)*3
	Rear	62.3 in (1,582 mm)*1,*2 62.5 in (1,587 mm)*3

Weights

Gross vehicle weight rating	See the certification label attached to the driver's doorjamb (front edge of rear door).

Seating Capacities

Total	4
Front	2
Rear	2

Engine

Type	Water cooled 4-stroke DOHC i-VTEC 4-cylinder gasoline engine
Bore x Stroke	3.43 x 3.90 in (87.0 x 99.0 mm)
Displacement	144 cu-in (2,354 cm^3)
Compression ratio	9.7 : 1
Spark plugs	NGK: IZFR6K-11 DENSO: SKJ20DR-M11

*1: LX model
*2: EX model
*3: SC model

Capacities

Fuel tank		Approx. 15.9 US gal (60 L)
Engine oil	Change*1	
	Including filter	4.4 US qt (4.2 L)
	Without filter	4.2 US qt (4.0 L)
	Total	5.6 US qt (5.3 L)

Capacities

Engine coolant	Automatic Transmission	
	Change*2	1.35 US gal (5.1 L)
	Total	1.90 US gal (7.2 L)
	Manual Transmission	
	Change*2	1.37 US gal (5.2 L)
	Total	1.93 US gal (7.3 L)
Automatic transmission fluid	Change	
	4WD	2.6 US qt (2.5 L)
	2WD	2.7 US qt (2.6 L)
	Total	
	4WD	7.6 US qt (7.2 L)
	2WD	7.4 US qt (7.0 L)
Manual transmission fluid	Change	2.0 US qt (1.9 L)
	Total	
	4WD	2.4 US qt (2.3 L)
	2WD	2.3 US qt (2.2 L)
Rear differential fluid (4WD)	Change	1.1 US qt (1.0 L)
	Total	1.3 US qt (1.2 L)
Windshield washer reservoir		4.8 US qt (4.5 L)

*1: Excluding the oil remaining in the engine

*2: Including the coolant in the reserve tank and that remaining in the engine
Reserve tank capacity:
0.15 US gal (0.55 L)

Specifications

Air Conditioning

Refrigerant type	HFC-134a (R-134a)
Charge quantity	17.6—19.4 oz (500—550 g)
Lubricant type	ND-OIL8

Lights

Headlights	12 V — 60/55 W (H4/HB2)
Daytime running lights	12 V — 60 W (HB3)
Front turn signal/parking lights	12 V — 27/8 W (Amber)
Front side marker lights	12 V — 3 CP
Side turn signal lights	12 V — 3 CP
Rear turn signal lights	12 V — 21 W (Amber)
Rear side marker lights	12 V — 3 CP
Brake/Taillights	12 V — 21/5 W
Back-up lights	12 V — 21 CP
License plate lights	12 V — 5 W
Ceiling light	12 V — 8 W*1 12 V — 5 W*2, *3
Spotlights	12 V — 8 W*2, *3
Cargo area light	12 V — 8 W
High-mount brake light	12 V — 21 W

Battery

Capacity	12 V — 47 AH/20 HR
	12 V — 38 AH/5 HR

Fuses

Interior	See page 301 or the fuse label attached to the inside of the fuse box door under the steering column.
Under-hood	See page 302 or the fuse box cover.

Alignment

Toe-in	Front	0.0 in (0 mm)
	Rear	0.08 in (2.0 mm)
Camber	Front	—0°13′*1, *2
		—0°24′*3
	Rear	—1°00′*1, *2
		—1°06′*3
Caster	Front	1°50′

Tires

Size	Front/Rear	P215/70R16 99S*1, *2 P225/55R18 97H*3
Pressure	Front	33 psi (230 kPa, 2.3 kgf/cm²)*1, *2 32 psi (220 kPa, 2.2 kgf/cm²)*3
	Rear	35 psi (240 kPa, 2.4 kgf/cm²)*1, *2 32 psi (220 kPa, 2.2 kgf/cm²)*3
	Spare	60 psi (420 kPa, 4.2 kgf/cm²)

*1: LX model
*2: EX model
*3: SC model

DOT Tire Quality Grading (U.S. Vehicles)

The tires on your vehicle meet all U.S. Federal Safety Requirements. All tires are also graded for treadwear, traction, and temperature performance according to Department of Transportation (DOT) standards. The following explains these gradings.

Uniform Tire Quality Grading
Quality grades can be found where applicable on the tire sidewall between tread shoulder and maximum section width. For example:

Treadwear 200
Traction AA
Temperature A

All passenger car tires must conform to Federal Safety Requirements in addition to these grades.

Treadwear
The treadwear grade is a comparative rating based on the wear rate of the tire when tested under controlled conditions on a specified government test course. For example, a tire graded 150 would wear one and one-half (1 1/2) times as well on the government course as a tire graded 100. The relative performance of tires depends upon the actual conditions of their use, however, and may depart significantly from the norm due to variations in driving habits, service practices and differences in road characteristics and climate.

Traction
The traction grades, from highest to lowest, are AA, A, B, and C. Those grades represent the tire's ability to stop on wet pavement as measured under controlled conditions on specified government test surfaces of asphalt and concrete. A tire marked C may have poor traction performance.

Warning: The traction grade assigned to this tire is based on straight-ahead braking traction tests, and does not include acceleration, cornering, hydroplaning, or peak traction characteristics.

DOT Tire Quality Grading (U.S. Vehicles)

Temperature
The temperature grades are A (the highest), B, and C, representing the tire's resistance to the generation of heat and its ability to dissipate heat when tested under controlled conditions on a specified indoor laboratory test wheel. Sustained high temperature can cause the material of the tire to degenerate and reduce tire life, and excessive temperature can lead to sudden tire failure. The grade C corresponds to a level of performance which all passenger car tires must meet under the Federal Motor Vehicle Safety Standard No. 109. Grades B and A represent higher levels of performance on the laboratory test wheel than the minimum required by law.

Warning: The temperature grade for this tire is established for a tire that is properly inflated and not overloaded. Excessive speed, underinflation, or excessive loading, either separately or in combination, can cause heat buildup and possible tire failure.

Tire Labeling

The tires that came on your vehicle have a number of markings. Those you should be aware of are described below.

TIRE LABELING EXAMPLE

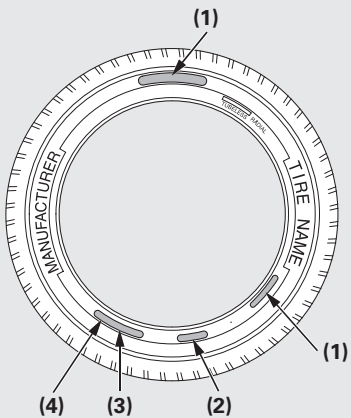

(1) Tire Size
(2) Tire Identification Number (TIN)
(3) Maximum Tire Pressure
(4) Maximum Tire Load

Tire Size

Whenever tires are replaced, they should be replaced with tires of the same size. Following is an example of tire size with an explanation of what each component means.

P215/70R16 99S

P – Vehicle type (P indicates passenger vehicle).

215 – Tire width in millimeters.

70 – Aspect ratio (the tire's section height as a percentage of its width).

R – Tire construction code (R indicates radial).

16 – Rim diameter in inches.

99 – Load index (a numerical code associated with the maximum load the tire can carry).

S – Speed symbol (an alphabetical code indicating the maximum speed rating).

Tire Identification Number (TIN)

The tire identification number (TIN) is a group of numbers and letters that look like the following example. TIN is located on the sidewall of the tire.

DOT B97R FW6X 2202

DOT – This indicates that the tire meets all requirements of the U.S. Department of Transportation.

B97R – Manufacturer's identification mark.

FW6X – Tire type code.

2202 – Date of manufacture.
Year
Week

CONTINUED

Tire Labeling, Tire Pressure Monitoring System (TPMS) – Required Federal Explanation

Glossary of Tire Terminology
Cold Tire Pressure - The tire air pressure when the vehicle has been parked for at least three hours or driven less than 1 mile (1.6km).

Load Rating - Means the maximum load that a tire is rated to carry for a given inflation presure.

Maximum Inflation Pressure - the maximum tire air pressure that the tire can hold.

Maximum Load Rating - Means the load rating for a tire at the maximum permissible inflation pressure for that tire.

Recommended Inflation Pressure - The cold tire inflation pressure recommended by the manufacturer.

Treadwear Indicators (TWI) - Means the projections within the principal grooves designed to give a visual indication of the degrees of wear of the tread.

Tire Pressure Monitoring System (TPMS)
Each tire, including the spare (if provided), should be checked monthly when cold and inflated to the inflation pressure recommended by the vehicle manufacturer on the vehicle placard or tire inflation pressure label.

(If your vehicle has tires of a different size than the size indicated on the vehicle placard or tire inflation pressure label, you should determine the proper tire inflation pressure for those tires.)

As an added safety feature, your vehicle has been equipped with a tire pressure monitoring system (TPMS) that illuminates a low tire pressure telltale

when one or more of your tires is significantly under-inflated.

Accordingly, when the low tire pressure telltale illuminates, you should stop and check your tires as soon as possible, and inflate them to the proper pressure.

Tire Pressure Monitoring System (TPMS) – Required Federal Explanation

Driving on a significantly under-inflated tire causes the tire to overheat and can lead to tire failure. Under-inflation also reduces fuel efficiency and tire tread life, and may affect the vehicle's handling and stopping ability.

Please note that the TPMS is not a substitute for proper tire maintenance, and it is the driver's responsibility to maintain correct tire pressure, even if under-inflation has not reached the level to trigger illumination of the TPMS low tire pressure telltale.

Your vehicle has also been equipped with a TPMS malfunction indicator to indicate when the system is not operating properly. The TPMS malfunction indicator is provided by a separate telltale, which displays the symbol “TPMS” when illuminated.

When the malfunction indicator is illuminated,

TPMS

the system may not be able to detect or signal low tire pressure as intended.

TPMS malfunctions may occur for a variety of reasons, including the installation of replacement or alternate tires or wheels on the vehicle that prevent the TPMS from functioning properly.

Always check the TPMS malfunction telltale after replacing one or more tires or wheels on your vehicle to ensure that the replacement or alternate tires and wheels allow the TPMS to continue to function properly.

Emissions Controls

The burning of gasoline in your vehicle's engine produces several by-products. Some of these are carbon monoxide (CO), oxides of nitrogen (NOx), and hydrocarbons (HC). Gasoline evaporating from the tank also produces hydrocarbons. Controlling the production of NOx, CO, and HC is important to the environment. Under certain conditions of sunlight and climate, NOx and HC react to form photochemical “smog.” Carbon monoxide does not contribute to smog creation, but it is a poisonous gas.

The Clean Air Act

The United States Clean Air Act* sets standards for automobile emissions. It also requires that automobile manufacturers explain to owners how their emissions controls work and what to do to maintain them. This section summarizes how the emissions controls work.

* In Canada, Honda vehicles comply with the Canadian emission requirements, as specified in an agreement with Environment Canada, at the time they are manufactured.

Crankcase Emissions Control System

Your vehicle has a positive crankcase ventilation system. This keeps gasses that build up in the engine's crankcase from going into the atmosphere. The positive crankcase ventilation valve routes them from the crankcase back to the intake manifold. They are then drawn into the engine and burned.

Evaporative Emissions Control System

As gasoline evaporates in the fuel tank, an evaporative emissions control canister filled with charcoal adsorbs the vapor. It is stored in this canister while the engine is off. After the engine is started and warmed up, the vapor is drawn into the engine and burned during driving.

Onboard Refueling Vapor Recovery

The onboard refueling vapor recovery (ORVR) system captures the fuel vapors during refueling. The vapors are adsorbed in a canister filled with activated carbon. While driving, the fuel vapors are drawn into the engine and burned off.

Exhaust Emissions Controls

The exhaust emissions controls include three systems: PGM-FI, ignition timing control, and three way catalytic converter. These three systems work together to control the engine's combustion and minimize the amount of HC, CO, and NOx that comes out the tailpipe. The exhaust emissions control systems are separate from the crankcase and evaporative emissions control systems.

PGM-FI System

The PGM-FI system uses sequential multiport fuel injection. It has three subsystems: air intake, engine control, and fuel control. The powertrain control module (PCM) in automatic transmission vehicles or the engine control module (ECM) in manual transmission vehicles uses various sensors to determine how much air is going into the engine. It then controls how much fuel to inject under all operating conditions.

Ignition Timing Control System

This system constantly adjusts the ignition timing, reducing the amount of HC, CO, and NOx produced.

Three Way Catalytic Converter

The three way catalytic converter is in the exhaust system. Through chemical reactions, it converts HC, CO, and NOx in the engine's exhaust to carbon dioxide (CO_2), nitrogen (N_2), and water vapor.

Replacement Parts

The emissions control systems are designed and certified to work together in reducing emissions to levels that comply with the Clean Air Act. To make sure the emissions remain low, you should use only new Honda replacement parts or their equivalent for repairs. Using lower quality parts may increase the emissions from your vehicle.

The emissions control systems are covered by warranties separate from the rest of your vehicle. Read your warranty manual for more information.

Three Way Catalytic Converter

The three way catalytic converter contains precious metals that serve as catalysts, promoting chemical reactions to convert the exhaust gasses without affecting the metals. The catalytic converter is referred to as a three-way catalyst, since it acts on HC, CO, and NOx. A replacement unit must be an original Honda part or its equivalent.

The three way catalytic converter must operate at a high temperature for the chemical reactions to take place. It can set on fire any combustible materials that come near it. Park your vehicle away from high grass, dry leaves, or other flammables.

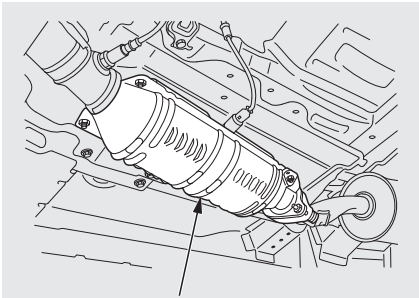

THREE WAY CATALYTIC CONVERTER

A defective three way catalytic converter contributes to air pollution, and can impair your engine's performance. Follow these guidelines to protect your vehicle's three way catalytic converter.

- Always use unleaded gasoline. Even a small amount of leaded gasoline can contaminate the catalyst metals, making the three way catalytic converter ineffective.
- Keep the engine well maintained.
- Have your vehicle diagnosed and repaired if it is misfiring, backfiring, stalling, or otherwise not running properly.

Testing of Readiness Codes
If you take your vehicle for an emissions test shortly after the battery has been disconnected or gone dead, it may not pass the test. This is because of certain “readiness codes” that must be set in the on-board diagnostics for the emissions systems. These codes are erased when the battery is disconnected, and set again only after several days of driving under a variety of conditions.

If the testing facility determines that the readiness codes are not set, you will be requested to return at a later date to complete the test. If you must get the vehicle retested within the next two or three days, you can condition the vehicle for retesting by doing the following.

1. Make sure the fuel tank is nearly, but not completely full (around 3/4).
2. Make sure the vehicle has been parked with the engine off for 6 hours or more.
3. Make sure the ambient temperature is between 40° and 95°F (4° and 35°C).
4. Without touching the accelerator pedal, start the engine, and let it idle for 20 seconds.
5. Keep the vehicle in Park (automatic transmission) or neutral (manual transmission). Increase the engine speed to 2,000 rpm, and hold it there until the temperature gauge rises to at least 1/4 of the scale (about 3 minutes).
6. Without touching the accelerator pedal, let the engine idle for 20 seconds.

CONTINUED

7. Select a nearby lightly traveled major highway where you can maintain a speed of 50 to 60 mph (80 to 97 km/h) for at least 20 minutes. Drive on the highway in D (automatic) or 5th (manual). Do not use cruise control. When traffic allows, drive for 90 seconds without moving the accelerator pedal. (Vehicle speed may vary slightly; this is okay.) If you cannot do this for a continuous 90 seconds because of traffic conditions, drive for at least 30 seconds, then repeat it two more times (for a total of 90 seconds).
8. Then drive in city/suburban traffic for at least 10 minutes. When traffic conditions allow, let the vehicle coast for several seconds without using the accelerator pedal or the brake pedal.
9. Make sure the vehicle has been parked with the engine off for 30 minutes.

If the testing facility determines the readiness codes are still not set, see your dealer.

Warranty and Customer Relations

Customer Service Information 322
Warranty Coverages 323
Reporting Safety Defects (U.S. Vehicles) 324
Authorized Manuals..... 325

Customer Service Information

Honda dealership personnel are trained professionals. They should be able to answer all your questions. If you encounter a problem that your dealership does not solve to your satisfaction, please discuss it with the dealership's management. The service manager or general manager can help. Almost all problems are solved in this way.

If you are dissatisfied with the decision made by the dealership's management, contact Honda Customer Service.

U.S. Owners:
American Honda Motor Co., Inc.
Automobile Customer Service
Mail Stop 500-2N-7A
1919 Torrance Boulevard
Torrance, California 90501-2746

Tel: (800) 999-1009

Canadian Owners:
CUSTOMER RELATIONS

Honda Canada Inc.
715 Milner Avenue
Toronto, ON
M1B 2K8

Tel: 1-888-9-HONDA-9

Fax: Toll-free 1-877-939-0909
Toronto (416) 287-4776

In Puerto Rico and the U.S. Virgin Islands:
Bella International
P.O. Box 190816
San Juan, PR 00919-0816

Tel: (787) 620-7546

When you call or write, please give us this information:

- Vehicle identification number (see page 306)
- Name and address of the dealer who services your vehicle
- Date of purchase
- Odometer reading of your vehicle
- Your name, address, and telephone number
- A detailed description of the problem
- Name of the dealer who sold the vehicle to you

U.S. Owners
Your new vehicle is covered by these warranties:

New Vehicle Limited Warranty – covers your new vehicle, except for the battery, emissions control systems, and accessories, against defects in materials and workmanship.

Emissions Control Systems Defects Warranty and Emissions Performance Warranty – these two warranties cover your vehicle's emissions control systems. Time, mileage, and coverage are conditional. Please read your warranty booklet for exact information.

Original Equipment Battery Limited Warranty – this warranty gives up to 100% credit toward a replacement battery.

Seat Belt Limited Warranty – a seat belt that fails to function properly is covered by a limited warranty. Please read your warranty booklet for details.

Rust Perforation Limited Warranty – all exterior body panels are covered for rust-through from the inside for the specified time period with no mileage limit.

Accessory Limited Warranty – Honda accessories are covered under this warranty. Time and mileage limits depend on the type of accessory and other factors. Please read your warranty booklet for details.

Replacement Parts Limited Warranty – covers all Honda replacement parts against defects in materials and workmanship.

Replacement Battery Limited Warranty – provides prorated coverage for a replacement battery purchased from your dealer.

Replacement Muffler Lifetime Limited Warranty – provides coverage for as long as the purchaser of the muffler owns the vehicle.

Restrictions and exclusions apply to all these warranties. Please read the 2010 Honda warranty information booklet that came with your vehicle for precise information on warranty coverages. Your vehicle's original tires are covered by their manufacturer. Tire warranty information is in a separate booklet.

Canadian Owners
Please refer to the 2010 warranty manual that came with your vehicle.

Reporting Safety Defects (U.S. Vehicles)

If you believe that your vehicle has a defect which could cause a crash or could cause injury or death, you should immediately inform the National Highway Traffic Safety Administration (NHTSA) in addition to notifying American Honda Motor Co., Inc.

If NHTSA receives similar complaints, it may open an investigation, and if it finds that a safety defect exists in a group of vehicles, it may order a recall and remedy campaign. However, NHTSA cannot become involved in individual problems between you, your dealer, or American Honda Motor Co., Inc.

To contact NHTSA, you may call the Vehicle Safety Hotline toll-free at 1-888-327-4236 (TTY: 1-800-424-9153); go to *http://www.safercar.gov;* or write to: Administrator, NHTSA, 1200 New Jersey Avenue, SE., Washington, DC 20590.
You can also obtain other information about motor vehicle safety from *http://www.safercar.gov.*

Purchasing Factory Authorized Manuals (U.S. only)

The publications shown below can be purchased from Helm Incorporated. You can order by phone or online:

- Call Helm Inc. at (800)782-4356 (credit card orders only)
- Go online at *www. helminc. com*

If you are interested in other years or models, contact Helm Inc. at (800) 782-4356.

Publication Form Number	Form Description
61SCV08	2010 Honda Element Service Manual
61SCV08EL	2010 Honda Element Electrical Troubleshooting Manual
61SCV30	2009 Honda Element Body Repair Manual
31SCV670	2010 Honda Element Owner's Manual
31SCV810	2010 Honda Element Navigation System Owner's Manual
31SCVM50	2010 Honda Element Honda Service History
31SCVQ70	2010 Honda Element Technology Reference Guide
HON-R	Order Form for Previous Years- Indicate Year and Model Desired

Service Manual:
Covers maintenance and recommended procedures for repair to engine and chassis components. It is written for the journeyman mechanic, but it is simple enough for most mechanically inclined owners to understand.

Electrical Troubleshooting Manual:
Complements the Service Manual by providing in-depth troubleshooting information for each electrical circuit in your vehicle.

Body Repair Manual:
Describes the procedures involved in the replacement of damaged body parts.

Service Information Summary

Gasoline:
Unleaded gasoline, pump octane number of 87 or higher.

Fuel Tank Capacity:
15.9 US gal (60 L)

Recommended Engine Oil:
API Premium grade 5W-20 detergent oil (see page 251).

Oil change capacity (including filter):
4.4 US qt (4.2 L)

Automatic Transmission Fluid:
Honda Genuine ATF-Z1 (Automatic Transmission Fluid) (see page 256).

Manual Transmission Fluid:
Honda Manual Transmission Fluid preferred, or an SAE 10W-30 or 10W-40 motor oil as a temporary replacement (see page 257).

Capacity (including differential):
2.0 US qt (1.9 L)

4WD models only
Rear Differential Fluid:
Honda Dual Pump Fluid II. Do not use ATF.

Capacity:
1.1 US qt (1.0 L)

Power Steering Fluid:
Honda Power Steering Fluid preferred, or another brand of power steering fluid as a temporary replacement. Do not use ATF (see page 260).

Brake Fluid:
Honda Heavy Duty Brake Fluid DOT 3 preferred, or a DOT 3 or DOT 4 brake fluid as a temporary replacement (see page 258).

Tire Pressure (measured cold):
All models except SC
Front:
33 psi (230 kPa, 2.3 kgf/cm^2)
Rear:
35 psi (240 kPa, 2.4 kgf/cm^2)
SC model
Front/Rear:
32 psi (220 kPa, 2.2 kgf/cm^2)

Spare Tire Pressure:
60 psi (420 kPa, 4.2 kgf/cm^2)