Owner's Manual
for Vehicle

Contents
From A to Z

CarManuals2.com

Online Edition for Part No. 01 41 0 156 441 - © 10/01 BMW AG

BMW recommends Castrol

CarManuals2.com

Z3 roadster 2.5i
Z3 roadster 3.0i
Z3 coupe 3.0i

Online Edition for Part No. 01 41 0 156 441 - © 10/01 BMW AG

Congratulations, and thank you for choosing a BMW.

Thorough familiarity with your vehicle will provide you with enhanced control and security when you drive it. We therefore have this request:

Please take the time to read this Owner's Manual and familiarize yourself with the information that we have compiled for you before starting off in your new BMW. It contains important data and instructions intended to assist you in gaining maximum use and satisfaction from the unique range of technical features on your BMW. The manual also contains information on vehicle maintenance designed to enhance operating safety and contribute to maintaining the value of your vehicle throughout an extended service life.

For more detailed information refer to the supplemental manuals.

This manual is supplemented by a Service and Warranty Information Booklet (US models) or a Warranty and Service Guide Booklet (Canadian models). We recommend that you read this publication thoroughly.

Your BMW is covered by the following warranties:

– New Vehicle Limited Warranty

– Limited Rust Perforation Warranty

– Federal Emissions System Defect Warranty

– Federal Emissions Performance Warranty

– California Emissions Control System Limited Warranty

Detailed information about these warranties is listed in the Service and Warranty Information Booklet (US models) or in the Warranty and Service Guide Booklet (Canadian models).

CarManuals2.com

We wish you an enjoyable driving experience.

BMW AG

Notes on the Owner's Manual

We have made every effort to ensure that you are able to find what you need in this Owner's Manual as quickly as possible. The fastest way to find certain topics is by using the detailed index at the end. If you wish to gain only an initial overview of your vehicle, you will find this in the first chapter. The detailed table of contents is intended to stimulate your interest and encourage you to read the remainder of the manual.

Should you wish to sell your BMW at some time in the future, please remember to pass the Owner's Manual on to the new owner – the manual represents a legally-required element of the vehicle.

If you have additional questions, your BMW center will be glad to advise you.

© 2001 Bayerische Motoren Werke Aktiengesellschaft
Munich, Germany
Reprinting, including excerpts, only with the written consent of BMW AG, Munich.
Order No. 01 41 0 156 441
US English IX/2001
Printed in Germany
Printed on environmentally friendly paper (bleached without chlorine, suitable for recycling).

Symbols used

Indicates precautions that must be followed precisely in order to avoid the possibility of personal injury and serious damage to the vehicle.◀

Contains information that will assist you in gaining the optimum benefit from your vehicle and enable you to care more effectively for your vehicle.◀

Refers to measures that can be taken to help protect the environment.◀

◀ Marks the end of a specific item of information.

* Indicates special equipment, country-specific equipment and optional extras.

Identifies index entries that refer to owner service procedures or topics on vehicle maintenance.

The individual vehicle

On buying your BMW, you have decided in favor of a model with individualized equipment and features. This Owner's Manual describes all models and equipment that BMW offers within the same group.

We hope you will understand that equipment and features are included which you might not have chosen for your vehicle. Any differences can easily be identified, since all optional accessories and special equipment are marked with an asterisk *.

If your BMW features equipment which is not described in this Owner's Manual (a car radio or telephone, for instance), Supplementary Owner's Manuals are enclosed. We ask you to read these manuals as well.

CarManuals2.com

Status at time of printing

BMW pursues a policy of continuous, ongoing development which is conceived to ensure that our vehicles continue to embody the highest quality standards combined with advanced, state-of-the-art technology. For this reason, it is possible that the features described in this Owner's Manual could differ from those on your vehicle. Nor can errors and omissions be entirely ruled out. You are therefore asked to appreciate that no legal claims can be entertained on the basis of the data, illustrations or descriptions in this manual.

CarManuals2.com

For your own safety

Use unleaded gasoline only. Fuels containing up to and including 10% ethanol or other oxygenates with up to 2.8% oxygen by weight (i.e. 15% MTBE or 3% methanol plus an equivalent amount of co-solvent) will not void the applicable warranties respecting defects in materials or workmanship. Field experience has indicated significant differences in fuel quality (i.e. volatility, composition or additives, etc.) among gasolines offered for sale in the United States and Canada. The use of poor-quality fuels may result in driveability, starting and stalling problems especially under certain environmental conditions such as high ambient temperature and high altitude.
Should you encounter driveability problems that you suspect could be related to the fuel you are using, we recommend that you respond by switching to a recognized high-quality brand.
Failure to comply with these recommendations may result in unscheduled maintenance.
Follow the relevant safety rules when you are handling gasoline.◀

Important safety information!

For your own safety, use genuine parts and accessories approved by BMW.
When you purchase accessories tested and approved by BMW and Original BMW Parts, you simultaneously acquire the assurance that they have been thoroughly tested by BMW to ensure optimum performance when installed on your vehicle.
BMW warrants these parts to be free from defects in material and workmanship.
BMW will not accept any liability for damage resulting from installation of parts and accessories not approved by BMW.
BMW cannot test every product made by other manufacturers to verify if it can be used on a BMW safely and without risk to either the vehicle, its operation, or its occupants.
Original BMW Parts, BMW Accessories and other products approved by BMW, together with professional advice on using these items, are available from all BMW centers.

CarManuals2.com

Installation and operation of non-BMW approved accessories such as alarms, radios, amplifiers, radar detectors, wheels, suspension components, brake dust shields, telephones (including operation of any portable cellular phone from within the vehicle without using an externally mounted antenna) or transceiver equipment (such as CB, walkie-talkie, ham radio or similar) may cause extensive damage to the vehicle, compromise its safety, interfere with the vehicle's electrical system or affect the validity of the BMW Limited Warranty. Consult your BMW center for additional information.◀

Maintenance, replacement, or repair of the emission control devices and systems may be performed by any automotive repair establishment or individual using any certified automotive part.◀

Symbol on vehicle parts

Indicates that you should consult the relevant section of this Owner's Manual for information on a particular part or assembly.

CarManuals2.com

The following only applies to vehicles owned and operated in the US.

REPORTING SAFETY DEFECTS

If you believe that your vehicle has a defect which could cause a crash or could cause injury or death, you should immediately inform the National Highway Traffic Safety Administration (NHTSA) in addition to notifying BMW of North America, LLC, P.O. Box 1227, Westwood, New Jersey 07675-1227, Telephone (201) 307-4000.

If NHTSA receives similar complaints, it may open an investigation, and if it finds that a safety defect exists in a group of vehicles, it may order a recall and remedy campaign. However, NHTSA cannot become involved in individual problems between you, your dealer or BMW of North America, LLC.

To contact NHTSA, you may either call the Auto Safety Hotline toll-free at 1-800-424-9393 (or 202-366-0123 in Washington, D.C. area) or write to: NHTSA, U.S. Department of Transportation, Washington, D.C. 20590. You can also obtain other information about motor vehicle safety from the Hotline.

CarManuals2.com

Overview

Controls and features

Operation, maintenance

Owner service procedures

Advanced technology

Technical data

Index

CarManuals2.com

Contents

Overview

Cockpit 16
Instrument cluster 18
Indicator and warning lamps 20
Hazard warning flashers 24
Warning triangle 24
First-aid kit 24
Refueling 25
Fuel specifications 26
Tire inflation pressure 26

Controls and features

Opening and closing:
Keys 30
Electronic vehicle immobilizer 31
Central locking system 32
Opening and closing from the outside 32
With the key 32
With the remote control 33
Opening and closing from the inside 36
Luggage compartment lid 36
Electric power windows 38
Sunroof, coupe 39
Convertible top 40

Adjustments:
Seats 49
Mirrors 50

Safety systems:
Safety belts 52
Airbags 54
Transporting children safely 56

Driving:
Ignition lock 58
Starting the engine 59
Switching off the engine 60
Parking brake 60
Manual transmission 61
Automatic transmission with Steptronic 62

Turn signals/High beams 64
Washer/Wiper system 65
Rear window defroster 66
Cruise Control 67

Everything under control:
Odometer 68
Tachometer 68
Fuel gauge 68
Coolant temperature gauge 69
Service Interval Display 69
Clock 70
Computer 70

Technology for safety and convenience:
Automatic Stability Control plus Traction (ASC+T) 73
Dynamic Stability Control (DSC) 74

Lamps:
Parking lamps/Low beams 76
Fog lamps 76
Interior lamps 77
Reading lamps 78

Controlling the climate for pleasant driving:
Heating and ventilation 80
Heating and ventilation/ Air conditioner 84
Seat heating 89

CarManuals2.com

Controls and features

Cabin convenience:
Glove compartment 90
Storage compartments 90
Storage boxes 90
Beverage holder 91
Ashtray 91
Cigarette lighter 92

Loading and transporting:
coupe:
Roll-up cover 93
Partition net 93
Cargo loading 94
Roof-mounted luggage rack 95

Operation, maintenance

CarManuals2.com

Special operating instructions:
Break-in procedure 98
Driving notes 99
Catalytic converter 100
Antilock Brake System (ABS) 101
Disc brakes 103
Brake system 104
Winter operation 105
Power steering 106
Cellular phone 107
Car radio reception 107
Hardtop – roadster 108

Wheels and tires:
Notes on inflation pressures 110
Tire condition 110
Tire replacement 111
Tire rotation 113
Wheel and tire combinations 114
Special features of winter tires 115
Snow chains 115
Approved wheel and tire specifications 116

In the engine compartment:
Hood 118
Engine compartment 120
Fluids for the washer systems 122
Washer nozzles 122
Engine oil 123
Coolant 125
Brake fluid 126
Vehicle Identification 127

Care and maintenance:
The BMW Maintenance System 128
Airbags 130
Storing your vehicle 130

Laws and regulations:
Technical modifications 132
California Proposition 65 Warning 132
OBD interface socket 133

Contents

Owner service procedures

Replacement procedures:
Onboard tool kit 136
Windshield wiper blades 136
Lamps and bulbs 137
Master key with battery lamp 143
Remote control 144
Wheel change 146
Battery 153
Fuses 156

In case of electrical malfunction:
Power convertible top 157
Fuel filler door 157

Assistance, giving and receiving:
Jump-starting 158
Towing the vehicle 159

Advanced technology

Adaptive Transmission Control (ATC) 164
Airbags 164
Automatic Stability Control plus Traction (ASC+T)/Dynamic Stability Control (DSC) 165
Car radio reception 166
Safety belt tensioner 166

Technical data

Engine specifications 170
Dimensions 171
Weights 172
Capacities 173
Electrical system 174
Drive belts 174

CarManuals2.com

Index

Everything from A to Z 178

CarManuals2.com

CarManuals2.com

Overview

Cockpit 16
Instrument cluster 18
Indicator and warning lamps 20
Hazard warning flashers 24
Warning triangle 24
First-aid kit 24
Refueling 25
Fuel specifications 26
Tire inflation pressures 26

CarManuals2.com

Controls and features

Operation, maintenance

Owner service procedures

Advanced technology

Technical data

Index

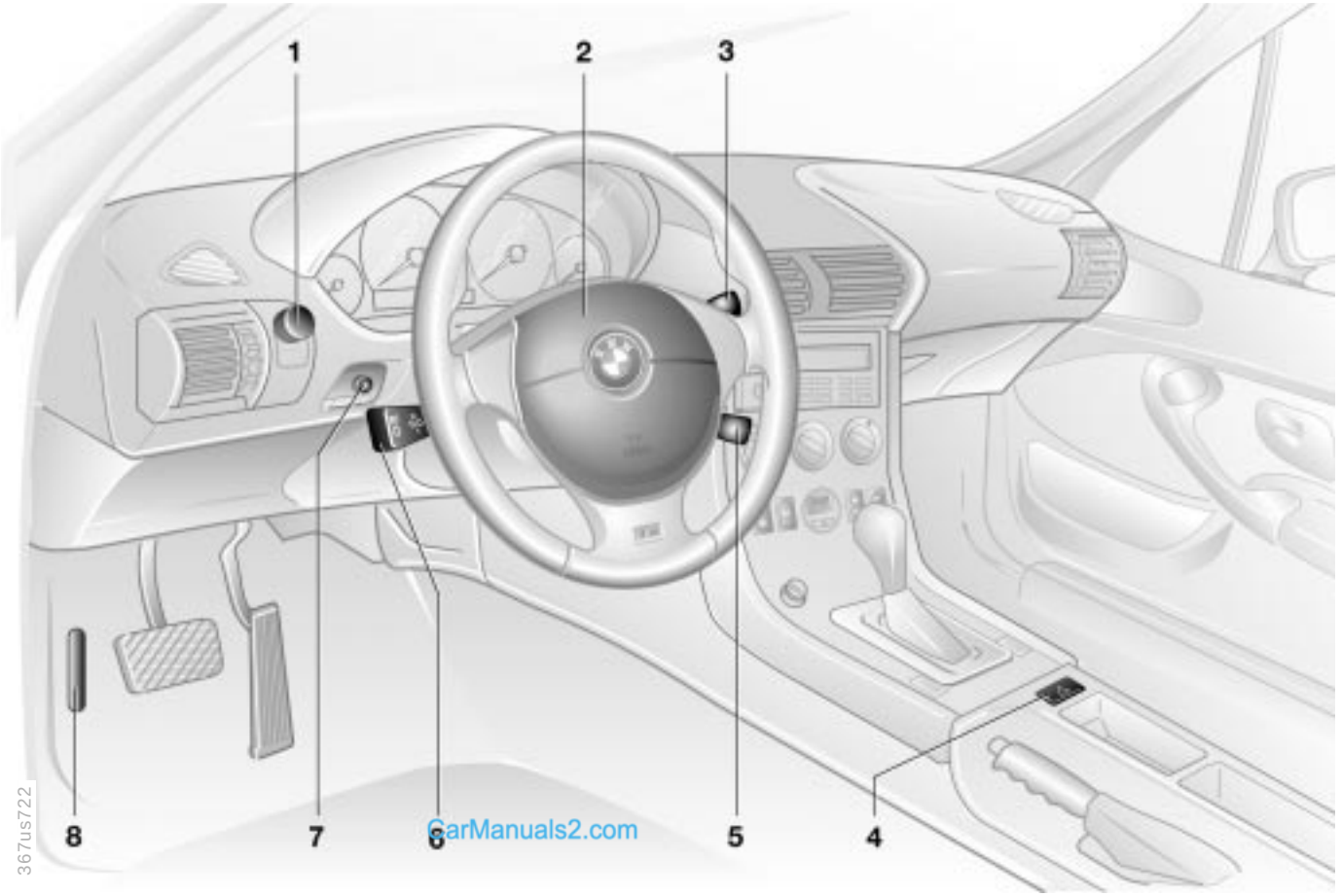
1
2
3
8
7
6
5
4
367us722
CarManuals2.com

Cockpit

1 Parking lamps/Low beams 76

2 Horn

3 Washer/Wiper system 65

4 Hazard warning flashers 24

5 Cruise control* 67

6 ▷ Turn signals 64
▷ High beams 64
▷ Headlamp flasher 64
▷ Computer* 70

7 Fog lamps 76

8 Hood release 118

CarManuals2.com

Instrument cluster

CarManuals2.com

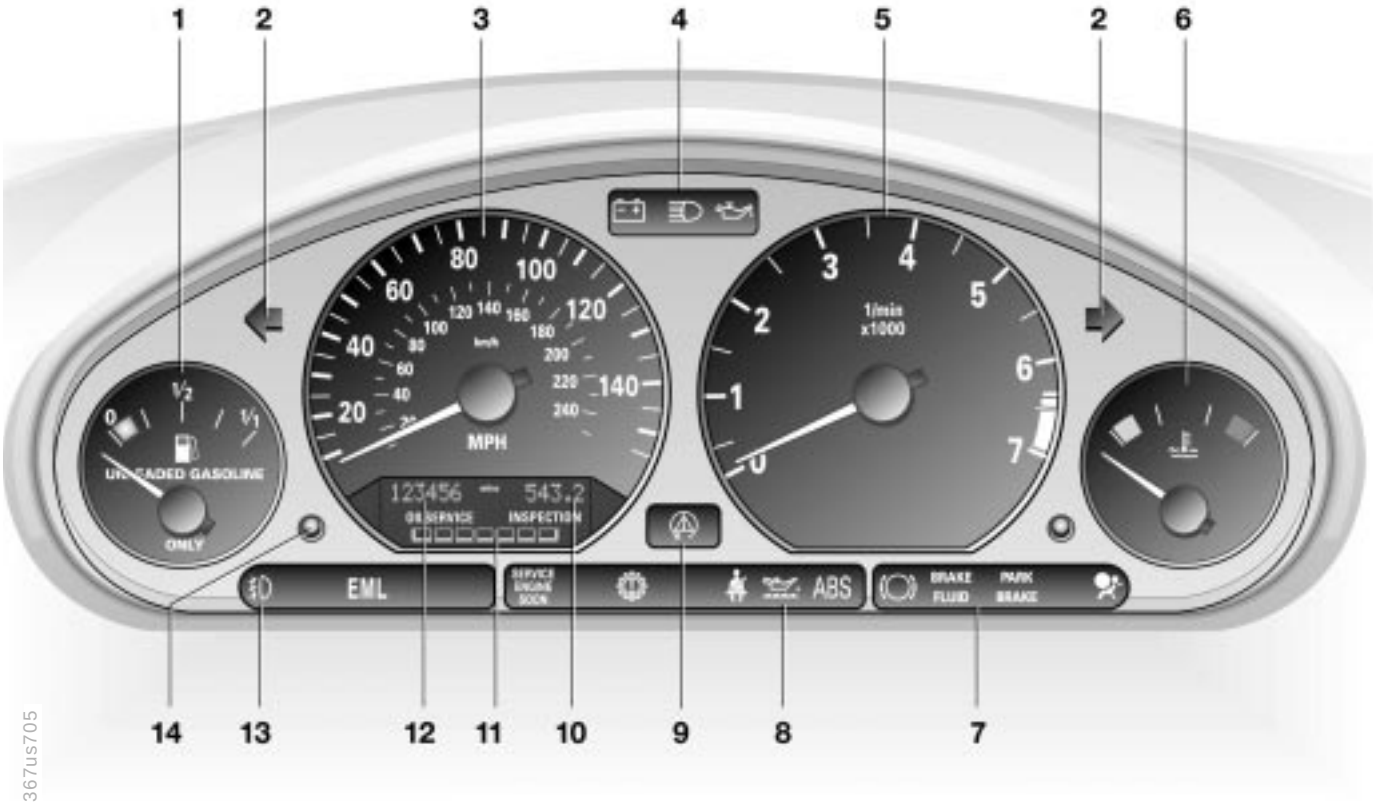

Instrument cluster

1 Fuel gauge with indicator lamp for reserve range 68

2 Indicator lamp for turn signals 23

3 Speedometer

4 Indicator and warning lamps for:
- ▷ Battery charge current 20
- ▷ High beams 23
- ▷ Engine oil pressure 20

5 Tachometer 68

6 Coolant temperature gauge 69

7 Indicator and warning lamps for:
- ▷ Brake pad wear 22
- ▷ Brake hydraulic system 20, 21, 22
- ▷ Parking brake 21
- ▷ Airbags 21

8 Indicator and warning lamps for:
- ▷ Service Engine Soon 22
- ▷ Automatic transmission* 22
- ▷ Safety belts 21
- ▷ Engine oil level 21
- ▷ Antilock Brake System (ABS) 21

9 Indicator lamp for Automatic Stability Control plus Traction (ASC+T)/Dynamic Stability Control (DSC*) 22

10 Trip odometer/Gear indicator for automatic transmission with Steptronic* 68

11 Service Interval Display 69, 128

12 Odometer 68

13 Indicator and warning lamps for:
- ▷ Front fog lamps* 23
- ▷ Engine electronics 22

14 Trip odometer reset button 68

The illustration shows the instrument cluster in the US version. In the Canadian models, some of the indicator and warning lamps have a different appearance, refer to pages 20 to 23.

CarManuals2.com

Technology that monitors itself

Indicator and warning lamps that are identified by "●" are tested for proper functioning whenever the ignition key is turned. They each light up once for different periods of time.

If a fault should occur in one of these systems, the corresponding lamp does not go out after the engine is started or it lights up while the vehicle is moving. You will see how to react to this in the following section.

Red: stop immediately

Battery charge current ●
The battery is no longer being charged. The alternator drive belt is defective or there is a malfunction in the charging circuit of the alternator. Please contact the nearest BMW center.

If the drive belt is defective, stop and switch off the engine immediately to prevent overheating and serious engine damage. If the drive belt is defective, increased steering effort is also required.◀

Engine oil pressure ●
Stop the vehicle immediately and switch off the engine. Check the engine oil level and top off as required. If the oil level is correct, please contact the nearest BMW center.

Do not continue driving, as the engine could sustain serious damage from inadequate lubrication.◀

BRAKE FLUID

Brake hydraulic system ●
The brake fluid level is too low. Before driving further, be sure to read the notes on pages 104 and 126.

Brake hydraulic system warning lamp for Canadian models.

CarManuals2.com

Red and yellow: continue to drive cautiously

The red warning lamp for the brake hydraulic system comes on together with the yellow indicator lamps for ABS, ASC+T/DSC*:
The entire ABS, CBC, ASC+T/DSC* and ADB/DBC control system has failed. Continue driving cautiously and defensively. Avoid hard brake applications. Have the system checked by your BMW center as soon as possible.
For additional information, refer to pages 73, 74 and 102.

Warning lamps for Canadian models.

Red: an important reminder

CarManuals2.com

Parking brake
Comes on when the parking brake is engaged.
For additional information, refer to page 60.

Parking brake warning lamp for Canadian models.

Please fasten your safety belt ●
Together with an acoustic signal. Comes on until the safety belts are fastened.
For additional information on safety belts, refer to page 52.

Airbags ●
Please have the system inspected by your BMW center.
For additional information, refer to pages 54 and 164.

Yellow: check as soon as possible

Antilock Brake System (ABS) ●
Comes on during normal vehicle operation: ABS has been deactivated in response to system malfunction. Conventional braking efficiency is available without limitations. Please have the system inspected by your BMW center.
For additional information, refer to page 101.

Antilock Brake System warning lamp for Canadian models.

Engine oil level
Comes on while driving: the oil level is at the absolute minimum; refill as soon as possible. Do not drive more than approx. 30 miles (50 km) until you do.
For additional information, refer to page 123.

Engine oil level
Comes on after the engine has been switched off: add engine oil at your earliest opportunity (when you stop to refuel).
For additional information, refer to page 123.

Automatic transmission*
Because of a malfunction, the automatic transmission shifts only in the emergency program. Please consult the nearest BMW center.
For additional information, refer to page 64.

Brake pads ●
Have the brake pads checked.
For additional information, refer to page 104.

Automatic Stability Control plus Traction (ASC+T)/Dynamic Stability Control (DSC)* ●
Indicator lamp flashes:
The system is actively regulating drive torque and braking force.
The indicator lamp stays lit:
ASC+T has been switched off with the button or it is defective, or the DSC* has been switched off, ADB is operational.
Please consult the nearest BMW center in case of a malfunction.
For additional information, refer to pages 73, 74.

Indicator lamp for Automatic Stability Control plus Traction (ASC+T)/Dynamic Stability Control (DSC)* and brake hydraulic system warning lamp ●
The indicator lamps remain on:
The DSC* and ADB/DBC have been switched off with the button or there is a system malfunction.
Please consult the nearest BMW center.
For additional information, refer to page 74.

Indicator and warning lamps for Canadian models.

Service Engine Soon ●
If the indicator lamp comes on either continuously or intermittently, this indicates a fault in the emissions-related electronic systems. Although the vehicle remains operational, you should have the systems checked by your BMW center at the earliest possible opportunity.
For additional information, refer to page 133.

"Service Engine Soon" warning lamp for Canadian models.

Engine electronics ●
There is a fault in the engine's electronic control system. You can continue to drive with reduced engine output or engine speed. Please have the system inspected by your BMW center.

CarManuals2.com

Green: for your information

Turn signal indicators
Flashes when the turn signal indicators are in operation.
Rapid flashing indicates a system malfunction.
For additional information, refer to page 64.

Front fog lamps*
Lights up whenever you switch on the front fog lamps.
For additional information, refer to page 76.

Blue: for your information

High beams
CarManuals2.com
Lights up when the high beams are on or the headlamp flasher is actuated.
For additional information, refer to page 64.

Hazard warning flashers

The button flashes rhythmically when the hazard flashers are on.

To help you locate the button in an emergency, the button is also illuminated whenever the vehicle lamps are on.

Warning triangle*

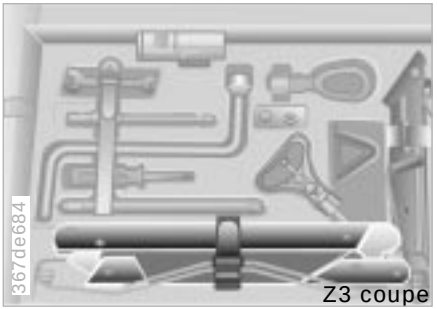

Z3 coupe

The warning triangle is located in the luggage compartment under the floor mat so that it is readily accessible (refer to the illustration).

Grasp the floor mat by the straps on the left and right. Pull it upward and remove it.

Z3 roadster

The warning triangle is located in the luggage compartment in the area of the sill.

Always observe all legal regulations requiring a warning triangle to be carried in the vehicle.◀

CarManuals2.com

First-aid kit*

Z3 coupe

In the luggage compartment at the left rear. Release the Velcro® fasteners.

Z3 roadster

In the luggage compartment on the right in a storage tray.

Some of the articles in the first-aid kit may be used within a limited time only. For this reason, check the expiration dates of each of the items regularly, and replace any whose expiration dates have passed. You can acquire replacements in any drugstore or pharmacy. Always observe all legal regulations requiring a first-aid kit to be carried in the vehicle.◀

Refueling

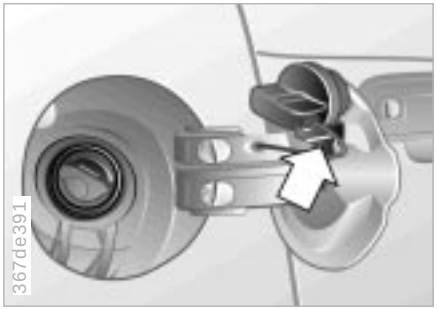

Before filling the tank, switch off the engine, as otherwise fuel cannot flow into the tank and the "Service Engine Soon" warning lamp may come on, refer to page 22.◀

Open the fuel filler cap:
To open the fuel filler door, turn the fuel filler cap counterclockwise and remove the cap. Place the filler cap in the bracket attached to the fuel filler door.

Open the filler cap carefully. If you do not, fuel could spray out.◀

To unlock the fuel filler door manually in the event of an electrical malfunction of the central locking system, refer to page 157.

When refueling, insert the filler nozzle completely into the filler pipe. Pulling the nozzle out of the pipe during refueling

▷ results in premature shutoff
▷ and will reduce the effect of the vapor recovery system.

If the filler nozzle is operated correctly, the fuel tank is full when it shuts off the first time.

Tank capacity, approx. 13.5 gal. (51 liters), incl. a reserve capacity of approx. 2.1 gal. (8 liters).

Close the fuel filler cap:
Position the cap on the neck. Turn the cap clockwise to the stop.

CarManuals2.com

Close the filler cap carefully after refueling until a "click" is heard. While closing, be sure not to squeeze the strap which is fastened to the cap. A loose or missing cap will activate the "Service Engine Soon" lamp.◀

Close the fuel filler door.

When handling fuels, comply with all of the applicable safety precautions and regulations pertaining to fuels.
Never carry spare fuel containers in your vehicle. Whether they are empty or full, these containers can leak, cause an explosion, or lead to fire in the event of a collision.◀

Fuel specifications

The engine uses lead-free gasoline only.

Required fuel:

▷ Premium Unleaded Gasoline, min. 91 AKI.

AKI = Anti Knock Index

⚠ Do not use leaded fuels. The use of leaded fuels will cause permanent damage to the system's oxygen sensor and the catalytic converter.◀

Tire inflation pressures

The inflation pressures are indicated on a label attached to the B-pillar behind the driver's door (visible with door open).

CarManuals2.com

Check tire pressures

All pressure specifications are indicated in psi (kilopascal [kPa]) with the tires at ambient temperature (refer also to the next page).

⚠ Check tire inflation pressures regularly – at least every two weeks and before every extended journey. Incorrect tire pressure can otherwise lead to tire damage and accidents.
Check the inflation pressure of the spare tire as well. Refer to the following table and to page 110.◀

Comply with tire approval specifications

The inflation pressures in the table apply to tires made by BMW-approved manufacturers. Your BMW center is familiar with these pressures. Higher pressures may be specified for tires made by other manufacturers. You will find a list of approved tires beginning on page 116.

Your vehicle is equipped with tires that meet both US standards and European standards. We recommend the exclusive use of BMW-approved tires.

Tire inflation pressures

BMW	Tires All tire pressures are in psi (kilopascals [kPa])		
Z3 roadster 2.5i	225/50 R 16 92 V 225/50 ZR 16	29 (200)	32 (220)
	Front: 225/45 ZR 17 Rear: 245/40 ZR 17	29 (200) –	– 32 (220)
	205/60 R 15 91 Q M+S 205/55 R 16 91 Q M+S 225/50 R 16 92 Q M+S 225/45 R 17 91 Q M+S	32 (220)	35 (240)
	Spare tire: T 115/90 R 16 92 M	61 (420)	61 (420)
Z3 roadster 3.0i Z3 coupe 3.0i	225/50 R 16 92 V 225/50 ZR 16	29 (200)	32 (220)
	Front: 225/45 ZR 17 Rear: 245/40 ZR 17	29 (200) –	– 32 (220)
	205/55 R 16 91 Q M+S 225/50 R 16 92 Q M+S 225/45 R 17 91 Q M+S	32 (220)	35 (240)
	Spare tire: T 115/90 R 16 92 M	61 (420)	61 (420)

CarManuals2.com

CarManuals2.com

Opening and closing:
Keys 30
Electronic vehicle immobilizer 31
Central locking system 32
Opening and closing from the outside 32
Opening and closing from the inside 36
Luggage compartment lid 36
Electric power windows 38
Sunroof, coupe 39
Convertible top 40

Adjustments:
Seats 49
Mirrors 50

Safety systems:
Safety belts 52
Airbags 54
Transporting children safely 56

Driving:
Ignition lock 58
Starting the engine 59
Switching off the engine 60
Parking brake 60
Manual transmission 61
Automatic transmission with Steptronic 62

Turn signals/High beams 64
Washer/Wiper system 65
Rear window defroster 66
Cruise control 67

Everything under control:
Odometer 68
Tachometer 68
Fuel gauge 68
Coolant temperature gauge 69
Service Interval Display 69
Clock 70
Computer 70

Technology for safety and convenience:
Automatic Stability Control plus Traction (ASC+T) 73
Dynamic Stability Control (DSC) 74

Lamps:
Parking lamps/Low beams 76
Fog lamps 76
Interior lamps 77
Reading lamps 78

Controlling the climate for pleasant driving:
Heating and ventilation 80
Heating and ventilation/ Air conditioner 84
Seat heating 89

Cabin convenience:
Glove compartment 90
Storage compartments 90
Storage boxes 90
Beverage holder 91
Ashtray 91
Cigarette lighter 92

Loading and transporting cargo:
coupe:
Roll-up cover 93
Partition net 93
Cargo loading 94
Roof-mounted luggage rack 95

CarManuals2.com

Overview

Controls and features

Operation, maintenance

Owner service procedures

Advanced technology

Technical data

Index

1 Master key with battery-powered lamp (switch on by pressing the BMW symbol)

2 Master key without lamp

3 Spare key for storage in a safe place such as your wallet. This key is not intended for continuous use

4 Door and ignition key
The luggage compartment lid and the storage boxes* cannot be opened with this key – this is useful for valet parking, for instance

Key with remote control unit*

1 Master key with remote control unit

2 Spare key for storage in a safe place, such as in your wallet. This key is not intended for constant use

3 Door and ignition key
The locks for the luggage compartment lid and the storage boxes* cannot be operated with this key – this is useful for valet parking, for instance.

▷ Some symbols on the remote control buttons can differ from those shown in the illustration.◀

Replacement keys

are available exclusively through your BMW center. Your BMW center is obligated to ensure that a person requesting a key is authorized to do so since the keys belong to a security system (refer to "Electronic vehicle immobilizer" on the next page).

▷ If possible, take all master keys that belong to the vehicle with you when you pick up your replacement keys.
Whenever you receive a new replacement key, turn that key to position 2 in the ignition lock once (ignition switched on) and then back. This allows the electronic vehicle immobilizer to "learn" the new key.◀

New master key with remote control, refer to page 144.

The key to security

The electronic vehicle immobilization unit increases the anti-theft protection of your BMW – you do not have to adjust or activate anything. This electronic immobilization system is designed to reduce the susceptibility of the vehicle to theft by making it impossible to start the engine using any means other than the special keys furnished with the vehicle.
Your BMW center can cancel the electronic system authorization for individual keys (in the event a key is lost, for instance). A deactivated key can no longer be used to start the engine.

How the electronics work

At the heart of this system is an electronic chip which is integrated into the key. The lock mechanism itself is actually a dual-function device, simultaneously serving as a communications interface designed to allow the security system to maintain a continuous stream of variable, vehicle-specific signals with the electronic circuitry in the key. The system will not release the ignition, fuel injection and starter unless it recognizes an "authorized" key.

▷ Force applied to the key can damage the integrated electronic circuitry. A damaged key can no longer be used to start the engine.◀

CarManuals2.com

The concept

The central locking system becomes operational when the doors are closed. The system simultaneously engages and releases the locks on the

- ▷ doors
- ▷ luggage compartment
- ▷ fuel filler door.

The central locking system can be operated

- ▷ from outside via the door locks, the luggage compartment lock as well as via the remote control*
- ▷ from inside via the safety lock buttons (locks doors only).

The anti-theft system is automatically activated whenever you activate the central locking system from outside the vehicle. It prevents the doors from being unlocked with the lock buttons or release handles.

The central locking system unlocks automatically in the event of an accident. In addition, the hazard warning flashers and interior lamps come on.

Opening and closing – from the outside

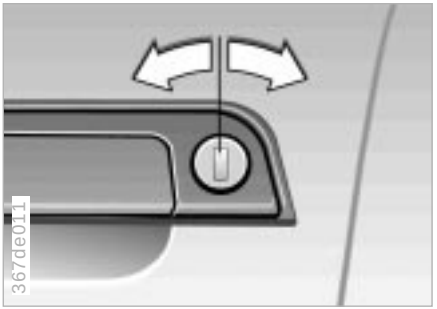

With the key

Never lock the doors when leaving passengers in the vehicle, as they would then be unable to unlock the door from the inside.◀

CarManuals2.com

Convenience locking mode

The electric power windows can also be closed via the door locks:

When the doors are closed, hold the key in the "Lock" position.

Watch the closing process carefully and be sure that no one is trapped by the closing motion. The closing process stops immediately when you release the key.◀

Manual operation

(in the event of electrical malfunction)

Turn the key all the way to the extreme left or right to unlock/lock the driver's door.

With the remote control*

The remote control gives you an exceptionally convenient method for unlocking and locking your vehicle. Furthermore, it provides an additional function which you can only execute via the remote control:

▷ To switch on the interior lamps, refer to page 34.
With this function, you can also "search for" the vehicle, when parked in an underground garage, for instance.

Whenever you unlock (lock) the vehicle, you simultaneously deactivate (activate) the anti-theft system and switch the interior lamps on (off).

Master key

Keys with remote control units are master keys, refer to page 30.

⚠ Since passengers or animals remaining in the vehicle might be able to lock the doors from the inside, always take the vehicle keys with you so that the vehicle can be opened again from the outside at any time.◀

Every transmission is indicated by a light signal. If the signal no longer lights up when a button is pressed and locking with the remote control is no longer possible:
Change the battery, refer to page 144.

▷ To prevent unauthorized use of the remote control, surrender only the door and ignition key 3 or the spare key 2 (refer to page 30) when leaving the vehicle for valet parking, for example.
In the event of a system malfunction, please contact your BMW center. You can also obtain replacement keys there.◀

CarManuals2.com

Opening and closing – from the outside

CarManuals2.com

To unlock

Press button 1.

The interior lamps are activated at the same time.

To lock and secure

Press button 2.

Never use the remote control to lock the doors when leaving passengers in the vehicle, as they would then be unable to unlock the door from the inside.◀

To switch on the interior lamps

With the vehicle locked, press button 3.

External systems

External systems or devices may cause local interference in the functions of the remote control.
Should this occur, you can still open and close the vehicle using the master key in either the door or luggage compartment locks.

For US owners only

The transmitter and receiver units comply with part 15 of the FCC (Federal Communications Commission) regulations. Operation is governed by the following:

FCC ID: LX8EWS
LX8FZVS

Compliance statement:
This device complies with part 15 of the FCC Rules. Operation is subject to the following two conditions:

- ▷ This device may not cause harmful interference, and
- ▷ this device must accept any interference received, including interference that may cause undesired operation.

▷ Any unauthorized modifications to these devices could void the user's authority to operate the equipment.◀

CarManuals2.com

To unlock and open the doors

▷ Pull the release handle of a door twice: the initial pull unlocks the door, and the second opens it.

To lock the doors

When the safety lock button of any door is pressed down, the doors and luggage compartment are locked. The anti-theft system is not activated.
The fuel filler door also remains unlocked to allow refueling.

To avoid being accidentally locked out of the vehicle:

▷ The vehicle cannot be locked with the lock button when the driver's door is open
▷ The lock button on the passenger's door only operates the central locking system if both doors are closed.

⚠ Since passengers or animals remaining in the vehicle might be able to lock the doors from the inside, always take the vehicle keys with you so that the vehicle can be opened again from the outside at any time.◀

CarManuals2.com

Luggage compartment lid

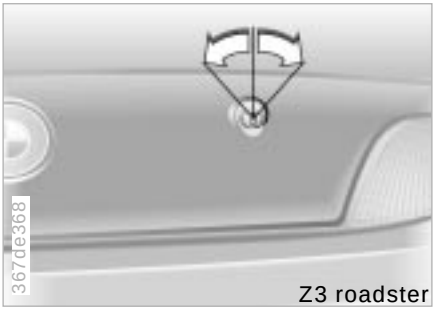

Z3 roadster

The lock

The illustration depicts the luggage compartment lock of the Z3 roadster as an example.

The controls and function for the Z3 coupe are the same as for the Z3 roadster.

Only the master keys (refer to page 30) will fit in the luggage compartment lock.

To lock separately

Turn the master key to the right past the pressure point and then pull it out in the horizontal position

This locks the luggage compartment and disengages it from the central locking system. If you then surrender only the door and ignition key (refer to page 30), access to the vehicle through the luggage compartment is not possible. This is recommended for valet parking, for instance.

Manual operation

(in the event of electrical malfunction)

Turn the master key in the lock of the luggage compartment lid to the left to the stop – the luggage compartment lid opens slightly.

The luggage compartment is locked again as soon as it is closed.

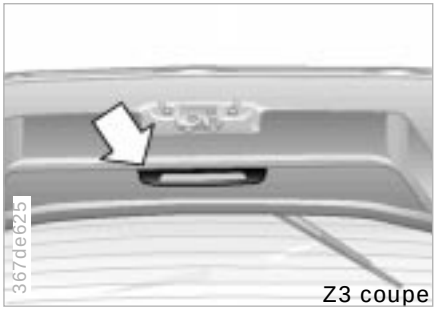

Z3 coupe

To close

The illustration depicts the luggage compartment lid of the Z3 coupe.

The handle recess in the interior trim panel of the luggage compartment lid (arrow) makes it easier to pull the lid down.

On the Z3 roadster, the handle recess is located to the left of the lock mechanism.

To avoid injuries, be sure that the travel path of the luggage compartment lid is clear when it is closed, as with all closing procedures.◀

Operate the vehicle only when the luggage compartment lid is closed, since exhaust fumes could penetrate the interior of the vehicle. Should it be absolutely necessary to operate the vehicle with the luggage compartment lid open (coupe; roadster with closed convertible top):

▷ Close all windows. On the coupe, close the sunroof

▷ Increase the air supply of the heating and ventilation system to a high level. Refer to page 82 or 86.◀

CarManuals2.com

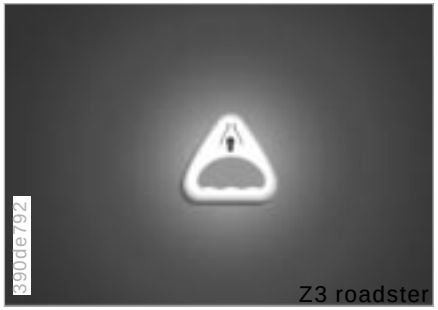

Emergency release – roadster only

This lever releases the luggage compartment lid from the luggage compartment's interior.

Opening and closing windows

From ignition key position 1 and up:

▷ Press the rocker switch up to the pressure point:
The window continues moving for as long as you maintain pressure on the switch

▷ Press the rocker switch beyond the pressure point (one-touch mode):
The window moves automatically. Press the switch a second time to stop the window.

After the ignition has been switched off:

Operation is still possible for up to 15 minutes in ignition key position 0 or if the ignition key has been removed, as long as no doors have been opened.

⚠ Because the power windows are sealed at high pressure to prevent wind noise when closed, a powerful motor is required for efficient closing. When closing the windows, always ensure that they are not obstructed in any way. Unsupervised use of these systems can result in serious personal injury. Remove the ignition key to deactivate the electric power windows whenever you leave the vehicle. Never leave the keys in the vehicle with unsupervised children.
Never place anything that could obstruct the driver's vision on or next to the windows.◀

For convenience closing via the door lock, refer to page 32.

CarManuals2.com

Jam protection

If one of the windows comes into contact with an object between the window and roof frame when it is closing, the closing cycle is interrupted immediately and the window will open again slightly.

You can override this jam protection function (if there is an attempted unauthorized entrance from the outside, for instance) by pressing the switch beyond the resistance point and holding it.◀

CarManuals2.com

Z3 coupe

Lifting – Closing

From ignition key position 1 and up:

To lift: press button 1.

To close: press button 2.

To prevent injuries, exercise care when closing the sunroof. Keep it in your field of vision until it is closed.◀

To avoid pressure or drafts in the passenger compartment when the sunroof is open, keep the air vents in the instrument panel open and increase the air supply if necessary, refer to pages 82 and 86.

Weather protection

The convertible top combines reliable protection from the elements with simple, convenient operation. Here are a few tips to ensure that you have pleasure with your roadster.

It is advisable to close the convertible top when the vehicle is parked. The closed convertible top not only protects the passenger compartment from unforeseeable damage from the weather, it also provides a certain degree of theft protection. In addition, keep valuables only in the locked luggage compartment, even with the convertible top closed.

Never mount a roof-mounted luggage rack on the convertible top. Please contact your BMW center for suitable securing devices and additional accessories.

To prevent damage, do not operate the convertible top at temperatures at the freezing point.

To open

1. With the doors closed, lower the side windows a few inches (centimeters)
2. To release the convertible top: pull the levers outward on the left and the right of the convertible top frame (refer to the illustration)

CarManuals2.com

3. Raise the convertible top approx. 8 in (20 cm) from the convertible top frame on the inside to relieve tension on the top, refer to arrow 1

▷ Be sure that the convertible top folds at the front linkage joints first, refer to arrow 2. If it does not, the convertible top linkage could be bent.◀

4. Continue to raise the top at the front and push it toward the rear into the convertible top compartment.
   In the process, make sure the rear window is laid down evenly and free of creases. To prevent the rear window from being scratched, a soft cloth should be laid in the window fold

5. Fold the release levers against the convertible top frame.

In order to avoid subsequent moisture damage, do not open and store the convertible top when it is wet.◀

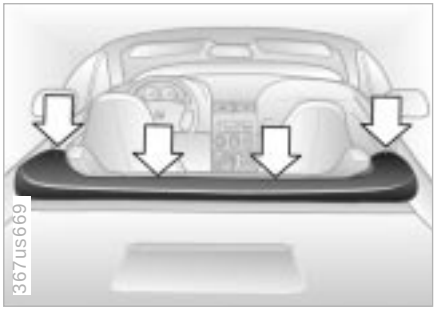

To mount the cover

The illustration depicts a representative schematic of the fasteners for the convertible cover.

To secure, press the outer ring of the cover fastener onto the mating piece on the vehicle (refer to the arrows).

The attachment points of the cover are indicated by the four arrows in the illustration.

1. Position the convertible cover on the convertible top compartment and align the upper portions of the fasteners with the lower portions on the vehicle
2. Lift the cover at the rear, reach underneath it and engage the two middle fasteners
3. Attach the front fasteners

CarManuals2.com

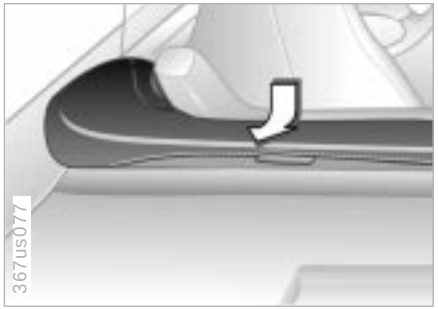

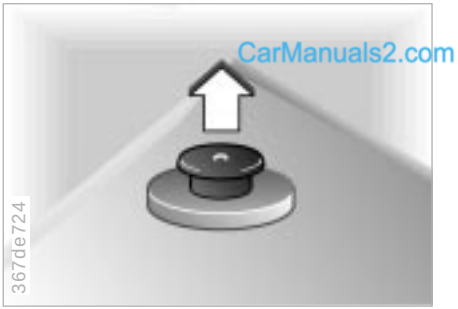

4. Push the peripheral frame of the cover under the edge of the convertible top compartment
5. Check the convertible cover to be sure it is properly secured.

In order to avoid damage and soiling of the inside of the convertible top, always drive with the cover secured in place.◀

Be sure that the cover is secured properly on the vehicle. If it is not firmly secured, the flow of air while driving could loosen the cover at higher speeds.◀

To close

1. To remove the convertible top cover:
   - ▷ Loosen the fasteners. Pull the cap of the latch upward, refer to the arrow
   - ▷ Loosen the front fasteners (outer arrows)
   - ▷ Pull the outer frame of the cover under the edge of the convertible top compartment
   - ▷ Lift the cover from the rear and release the middle fasteners (middle arrows)

▷ To avoid damage, carefully fold the cover and store it in the luggage compartment.

▷ Do not position heavy objects on the cover.
If you store the cover away from the vehicle, the cover should be spread out.◀

2. When the doors are closed, lower the side windows slightly

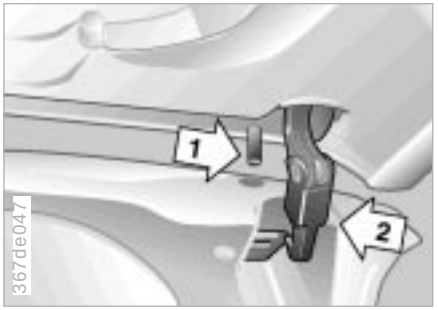

3. Pull the release lever away from the frame as far as possible
4. Holding the convertible top at the front convertible top frame, lift it out of the convertible top compartment and fold it forward

⚠ When folding the convertible top forward, do not grasp it by the side linkage. If you do so, there is a risk of injury to your hands and fingers.◀

5. Insert the pins 1, on the left and the right, into the guides in the windshield frame. Using the handle recess in the center of the convertible top frame, pull the convertible top down. Hold the top in this position and secure both fasteners, refer also to page 109.

CarManuals2.com

⚠ Be sure that the fastener hooks 2 on the left and right are securely engaged in the frame of the windshield. If they are not, the convertible top could open while the vehicle is moving.◀

▷ At higher speeds, it may occur that the lower air pressure which is created in the passenger compartment will cause the top or the rear window to flutter. Increase the air supply via the ventilation controls so that a low pressure draft does not occur in the vehicle.◀

Power convertible top, roadster*

Weather protection

The convertible top combines reliable protection from the elements with simple, convenient operation. Here are a few tips to ensure that you have pleasure with your roadster.

It is advisable to close the convertible top when the vehicle is parked. The closed convertible top not only protects the passenger compartment from unforeseeable damage from the weather, it also provides a certain degree of theft protection. In addition, keep valuables only in the locked luggage compartment, even with the convertible top closed.

Never mount a roof-mounted luggage rack on the convertible top. Please contact your BMW center for suitable securing devices and additional accessories.

To prevent damage, do not operate the convertible top at temperatures at the freezing point.

To conserve the battery, it is advisable to operate the top only with the engine running.

⚠ Operate the convertible top only when the vehicle is stationary.
Do not lay objects on the convertible top, since they would fall off when the convertible top is operated and cause damage or injuries.
Do not reach into the convertible top mechanism during opening and closing.
Keep children away from the moving parts of the convertible top during operation.
The automatic sequence is interrupted immediately if the button for actuating the top (pages 45 and 48) is released. The sequence can be continued in the desired direction by pressing the button.◀

To open

1. With the doors closed, lower the side windows a few inches (centimeters)
2. To release the convertible top: pull the levers outward on the left and the right of the frame of the top (refer to the illustration)

CarManuals2.com

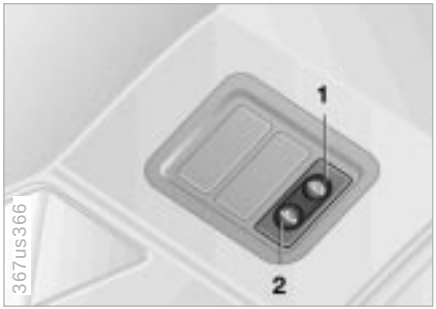

3. Raise the convertible top approx. 8 in (20 cm) from the convertible top frame on the inside to relieve tension on the top, refer to arrow 1

Be sure that the convertible top folds at the front linkage joints first, refer to arrow 2. If it does not, the convertible top linkage could be bent.◀

4. Press the release lever against the frame of the top
5. Hold the footbrake down during the entire opening procedure
6. Lift the convertible top frame. Press and hold the button for convertible top operation in the "open" direction (2) until the opening process is completed and the convertible top is folded into the convertible top compartment.

CarManuals2.com

If the convertible top has not been lifted far enough, or if the foot-brake is not applied, the motor which operates the convertible top will not operate.◀

In order to avoid subsequent moisture damage, do not leave the convertible top open when it is wet.◀

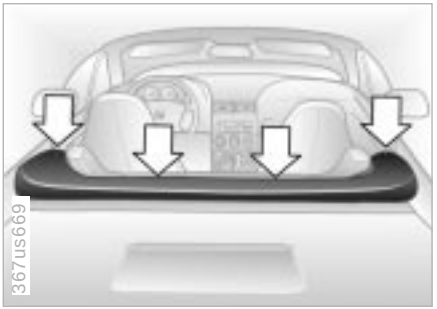

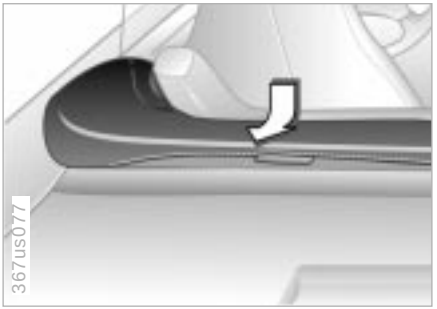

To mount the cover

The illustration depicts a representative schematic of the fasteners for the convertible cover.

To secure, press the outer ring of the cover fastener onto the mating piece on the vehicle (refer to the arrows).

The attachment points of the cover are indicated by the four arrows in the illustration.

1. Position the convertible cover on the convertible top compartment and align the upper portions of the fasteners with the lower portions on the vehicle
2. Lift the cover at the rear, reach underneath it and engage the two middle fasteners
3. Attach the front fasteners
4. Push the peripheral frame of the cover under the edge of the convertible top compartment
5. Check the convertible cover to be sure it is properly secured.

CarManuals2.com

▷ In order to avoid damage and soiling of the inside of the convertible top, always drive with the cover secured in place.◀

⚠ Be sure that the cover is secured properly on the vehicle. If it is not firmly secured, the flow of air while driving could loosen the cover at higher speeds.◀

CarManuals2.com

To close

1. To remove the convertible top cover:
   - ▷ Loosen the fasteners. Pull the cap of the latch upward, refer to the arrow
   - ▷ Release the front fasteners (outer arrows)
   - ▷ Pull the outer frame of the cover under the edge of the convertible top compartment
   - ▷ Lift the cover from the rear and release the middle fasteners (middle arrows)
   - ▷ To avoid damage, carefully fold the cover and store it in the luggage compartment.

▷ Do not position heavy objects on the cover.
The cover should be spread out if you store it away from the vehicle.◀

Power convertible top, roadster*

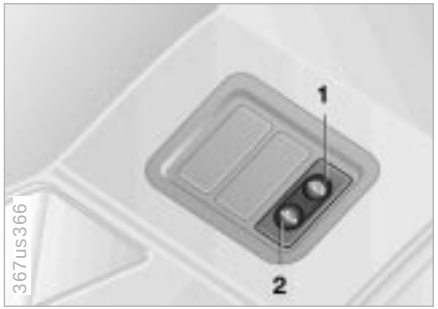

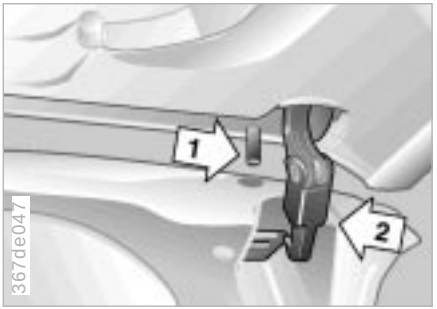

2. When the doors are closed, lower the side windows slightly
3. Pull the release lever away from the frame as far as possible
4. Hold the footbrake down during the entire closing procedure
5. Press and hold the button for convertible top operation in the "Close" direction (1) until the closing process is completed and the convertible top frame has docked against the windshield frame
6. Insert the pins 1, on the left and the right, into the guides in the windshield frame. Using the handle recess in the center of the convertible top frame, pull the convertible top down. Hold the top in this position and secure both fasteners, refer also to page 109.

CarManuals2.com

If the footbrake is not applied, the motor which operates the convertible top will not operate.◀

Be sure that the fastener hooks 2 on the left and right are securely engaged in the frame of the windshield. If they are not, the convertible top could open while the vehicle is moving.◀

At higher speeds, it may occur that the lower air pressure which is created in the passenger compartment will cause the top or the rear window to flutter. Increase the air supply via the ventilation controls so that a low pressure draft does not occur in the vehicle.◀

For maximum safety, please comply with the following:

Never try to adjust your seat while operating the vehicle. The seat could respond with an unexpected movement, and the ensuing loss of vehicle control could result in an accident.
Be sure that the safety belt is fastened firmly against your body at all times. In the event of a frontal impact, a loose lap belt could slide over your hips, leading to abdominal injury. In addition, the safety belt's restraint effectiveness is reduced if the belt is worn loosely.
When adjusting your seat, select a position that provides the maximum distance between you and the steering wheel, instrument panel and door while still allowing comfortable and safe access to all vehicle controls.◀

Correct sitting posture

Carmanuals2.com

To reduce strain on your spinal column, sit all the way back in the seat and rest your back fully against the backrest.
In the ideal sitting posture, your head extends along a straight line from your spine.
For long-distance driving, you may wish to increase the backrest tilt angle slightly to reduce muscular tension.
You should also be able to grasp the highest point of the steering wheel with your arms slightly bent.

After a seat adjustment in the coupe, adjust the height of the safety belt also, refer to page 52.

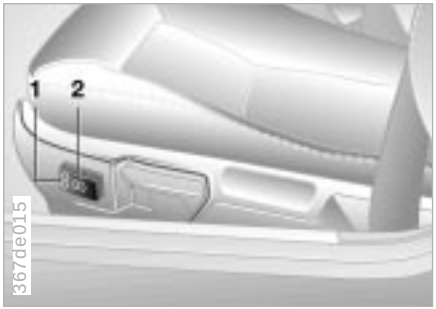

1 Height*

2 Backward/forward adjustment

Backrest angle

Pull the lever and apply or remove weight as required.

Read and comply with the adjustment instructions on page 49. Failure to do so can result in diminished personal safety.◀

Head restraints

The head restraints are integrated into the backrests.
Head restraints reduce the risk of spinal injury in the event of an accident.

CarManuals2.com

Mirrors

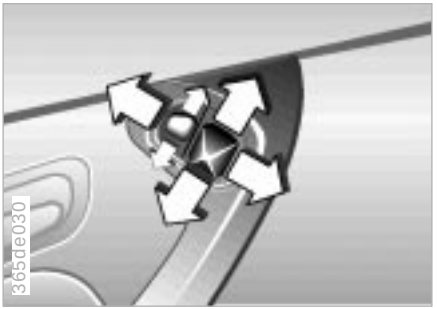

Exterior mirrors

Make adjustments with the large, four-directional mirror switch.

Change to the other rearview mirror with the smaller switch:

▷ Push the switch up – mirror on the driver's side
▷ Push the switch down – mirror on the passenger's side.

You can also adjust the mirrors manually by pressing against the outer edges of their lenses.

The mirror on the passenger's side features a lens with a convex surface. When estimating the distance between yourself and other traffic, bear in mind that the objects reflected in the mirror are closer than they appear. This means that estimates of the distance to following traffic should not be regarded as precise.◀

Electric defrosting*

Both mirrors are defrosted automatically when the ignition key is in position 2.

Interior rearview mirror

To reduce the glare effect from the rear while driving at night, tilt the mirror by moving the small lever.

Vanity mirrors

Fold the sun visors down and push the cover (coupe only) to the side.

CarManuals2.com

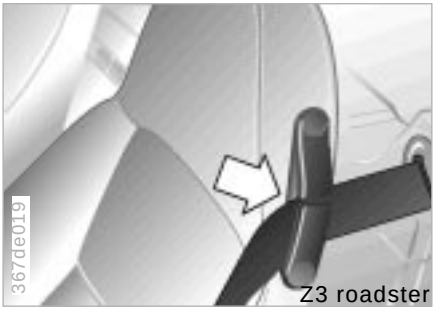

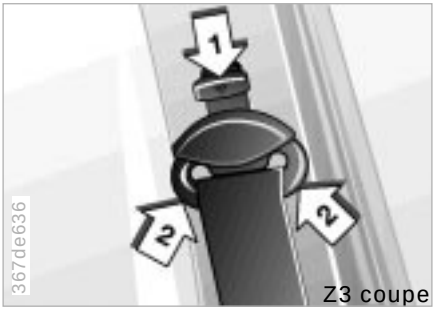

Drive with your safety belt on

Fasten your safety belt before beginning every trip.

To fasten: make sure you hear the catch engage in the belt buckle during the closing process.

To release: press the red button in the buckle. Hold the belt and guide it back to its reel.

The safety belt locks:

- ▷ In an abrupt stop or a collision
- ▷ If it is pulled out very quickly
- ▷ During sudden braking or acceleration
- ▷ When the vehicle is at an extreme angle.

Z3 roadster

Make sure the safety belts are routed through the belt guides on the seat backrests.

Safety belt height adjustment – Z3 coupe

You can adjust the safety belts to fit your own physical dimensions by using the safety belt height adjustment mechanism.

Downward adjustment:
Press the button down (arrow 1).

Upward adjustment:
Grasp the deflection fitting on the sides and slide it upward (arrows 2).

CarManuals2.com

Comply with the following instructions for wearing safety belts. If you do not, maximum personal protection will not be provided and the safety function of the belt is limited. These instructions also apply for vehicle passengers:
Never allow more than one person to wear a single safety belt. Never allow infants or small children to ride in a passenger's lap.
Avoid twisting the belt while routing it firmly across your pelvis and shoulder. Do not route the belt across hard or fragile objects. Do not route the belt across your neck, or run it across sharp edges. Be sure that the belt does not become caught or jammed.
Avoid wearing bulky clothing which will prevent proper belt fit. Pull the safety belt across your shoulders frequently to retension it. In the event of a frontal impact, a loose lap belt could slide over your hips, leading to abdominal injury. In addition, the safety belt's restraint effectiveness is reduced if the belt is worn loosely.

Expectant mothers should also wear their safety belt at all times, taking care to ensure that the lap belt fits against the lower hips and does not exert pressure on the abdominal area.◀

For care and cleaning, refer to the "Caring for your vehicle" manual.

If the safety belt system has been stressed as a result of an accident or if it has been damaged in any other way: have the belt system, including the safety belt tensioner replaced by a BMW center. In addition, have your BMW center inspect the safety belt anchors.
If a child-restraint system was in your vehicle during an accident, consult the manufacturer's instructions regarding replacement.◀

CarManuals2.com

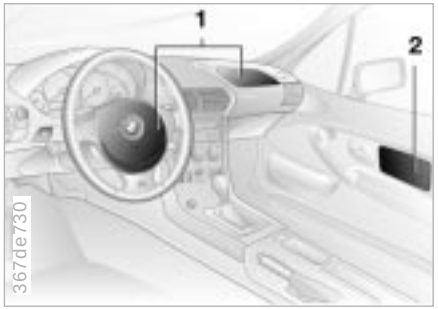

1 Front airbags on the driver and passenger side

2 Side airbags on the driver and passenger side

Protective effect

The front airbags help protect the driver and passenger in the event of a head-on collision where the protection provided by the safety belt alone would not be adequate. The side airbags help provide protection in the event of a side collision. Each side airbag provides support to the side chest area.

The illustration depicts schematically the primary directions of vehicle impact which initiate airbag deployment.

▷ The airbags will not be triggered in the event of a minor accident, a vehicle roll-over, or an impact from the rear.◀

Operational readiness

The indicator lamp in the instrument cluster shows the airbag-system's operational readiness starting with ignition key position 1.

System operational:

▷ The indicator lamp comes on briefly.

System malfunction:

▷ The indicator lamp fails to come on

▷ The indicator lamp comes on briefly before going out and then lighting up again.

A system malfunction could prevent the system from responding to a high-intensity frontal impact occurring within its normal response range.

Please have your BMW center inspect and repair the system as soon as possible.

Online Edition for Part No. 01 41 0 156 441 - © 10/01 BMW AG

Sitting correctly with airbags

For your safety, comply with the following instructions for the airbags. If you do not, the airbags may not be able to provide their maximum protection. All passengers in the vehicle should be aware of and comply with this information:
The airbags are supplemental restraint devices designed to provide extra protection; they are not a substitute for safety belts. Wear your safety belt at all times.
Adjust your seat to a position that is comfortable for you, allowing unrestricted vehicle operation, and is not closer to the steering wheel than necessary.
Always grasp the steering wheel by the steering wheel rim, keeping your hands at the "9-o'clock" and "3-o'clock" positions in order to minimize any risk of injury to hands or arms if the airbag does deploy.
There should not be any other persons, animals or objects between the airbag and the passenger in that seat.
Do not use the cover panel for the front airbag on the passenger side as a storage area.
Do not apply adhesive materials to the cover panels of the airbags, cover them or modify them in any other way.
If you use a child-restraint system, read carefully and comply with the instructions on page 56.
Be sure that child-restraint systems are installed correctly and with the greatest possible distance from the airbag in the side trim panel. Do not allow children to lean out of the child-restraint system in the direction of the side trim panel. Otherwise, serious injuries could occur if the airbag is triggered.◀

Even when you have complied with all of these guidelines, there is still a small residual risk of minor facial, hand and arm injuries from airbag deployment occurring in isolated instances.
The ignition and inflation noise may cause a mild temporary hearing loss in extremely sensitive individuals.

Corresponding airbag safety precautions are provided on both sun visors and the instrument panel (US models).

For additional information concerning the airbag system, refer to pages 130 and 164.

CarManuals2.com

This is the correct way a child should sit in a child restraint when side airbags (arrow) are provided.

This is the correct way a larger child should sit wearing the safety belt when side airbags (arrow) are provided.

Transporting children safely

CarManuals2.com

Before installing any child-restraint system, please read the following:
Never install a rear-facing child-restraint system in the passenger seat of this vehicle.
If the airbag deploys and hits the back-rest of the rear-facing child seat, it is likely that the child sitting in the rear-facing child-restraint system will be seriously injured or killed.
If it is necessary for a child (not an infant) to ride in the vehicle, certain precautions should be taken. First, move the passenger seat as far away from the instrument panel as possible. This important precaution is intended to maximize the distance between the airbag and the child. Older children should be tightly secured with the safety belt. Younger children should be secured in an appropriate forward-facing child-restraint system that has first been secured with a safety belt.

In the interest of the child's safety, please read carefully and comply with the instructions for installation and use provided by the child restraint's manu-facturer whenever you use such a device.
Do not allow children to lean out of a child-restraint system toward the door or instrument panel, as otherwise serious injuries may result if the airbag deploys. Always ensure that all occu-pants (of all ages) remain properly and securely restrained at all times.
Read carefully and comply with the safety precautions covering safety belts on pages 52, 53. If you do not, the protective function of the safety belts will be limited.◀

Child-restraint system installation

The safety belt on the passenger side can be locked for mounting and securing child-restraint systems.

A label with operating instructions is attached to the belt next to the sliding latch plate.

To lock the belt

Carmanuals2.com

Extract the entire length of the belt from the inertia reel mechanism. Allow the reel to retract the belt somewhat and engage the buckle, then tighten the belt against the child-restraint system. The retraction mechanism is now locked. The belt cannot be retracted further. Comply with the installation instructions provided by the manufacturer of the child-restraint system.

To release the belt

Release the buckle, remove the child-restraint system and allow the inertia reel to retract the belt completely.

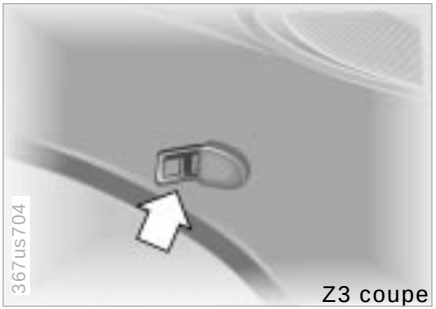

Z3 coupe

For the use of child-restraint systems with a tether strap, an additional mounting point is provided in the coupe at the right rear on the roof frame.

Attach the tether strap hook to the mounting point. Adjust the tether strap according to the child-restraint manufacturer's instructions.

0 Steering locked

This is the only position in which the ignition key can be inserted and removed.

An acoustic warning sounds when you fail to remove the ignition key after opening the driver's door.

After removing the key, turn the steering wheel slightly to the left or right until the lock engages.

▷ Vehicles with automatic transmission*:

CarManuals2.com

Your vehicle is equipped with an interlock. This means that the ignition key cannot be turned to position 0 and removed until the selector lever is in position "P".
Furthermore, the selector lever is locked in position "P" when the ignition key is in position 0 or removed from the ignition lock.
To turn the key back to position 0 or to remove it, first move the selector lever to position "P".◀

1 Steering unlocked

You will often find that it is easier to turn the ignition key from position 0 to 1 if you move the steering wheel slightly to help disengage the detent.
Individual electrical equipment and accessories are available for use.

2 Ignition on

All electrical equipment and accessories are available for use.

3 Starting the engine

Vehicles with manual transmission: When starting, depress the clutch, since a lock otherwise prevents the engine from being started.

Before starting

▷ Engage the parking brake
▷ Be sure that the gearshift lever is in "Neutral" (or the selector lever in "P" if the vehicle is equipped with automatic transmission)
▷ Depress the clutch pedal.

Do not run the engine in enclosed spaces. The exhaust gases contain carbon monoxide, an odorless and colorless, but highly toxic gas. Breathing the exhaust gases poses an extreme health risk, and can lead to unconsciousness and death.
Do not leave the vehicle unattended with the engine running. An unattended vehicle with a running engine represents a potential safety hazard.◀

Starting the engine

▷ Do not press the accelerator pedal while starting the engine.

Do not actuate the starter for too short a time. Do not turn it for more than approx. 20 seconds. Release the ignition key immediately after the engine starts.
Do not allow the engine to warm up by leaving it running while the vehicle remains stationary. Instead, begin to drive immediately at a moderate engine speed.◀

Should the engine fail to start on the first attempt (if it is very hot or cold, for instance):

▷ Press the accelerator pedal halfway down while engaging the starter.

Cold starts at very low temperatures, from approx. +5 °F (–15 °C) and at altitudes above approx. 3,300 ft (1,000 m):

▷ On the first start attempt, engage the starter for a longer period (approx. 10 seconds).

If these temperature conditions are anticipated for a longer period, have the engine oil changed to a special oil, refer to page 124. Please contact your BMW center for additional information.

Usually, it is not necessary to depress the accelerator pedal. However, at high altitudes or in very hot or very cold weather, depress the pedal halfway down when starting the engine.

Engine idle speed is controlled by the engine computer system. Increased speeds at start-up are normal and should decrease as the engine warms up. If engine speed does not decrease, service is required.

To prevent the battery from discharging, always switch off any accessories which are not required. Switch off the ignition when the vehicle is not being driven.

CarManuals2.com

Switching off the engine

Turn the ignition key to position 1 or 0.

Do not remove the ignition key while the vehicle is rolling. The steering locks and it is impossible to steer the vehicle.
Always remove the ignition key and engage the steering lock before leaving the vehicle.
Vehicles with manual transmission:
Always engage the parking brake when parking on slopes and inclined surfaces, since even placing the gear-shift lever in 1st gear or reverse may not provide adequate resistance to rolling.
Vehicles with automatic transmission:
Place the selector lever in "P".◀

Parking brake

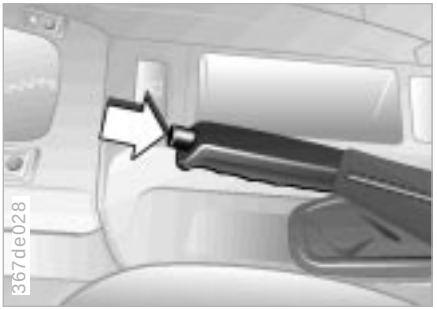

The parking brake is designed primarily to prevent the vehicle from rolling when parked. It operates against the rear wheels.

To engage

The lever engages automatically when you pull it up, and the indicator lamp in the instrument panel comes on when the ignition key is in position 2, refer to page 21.

To release

Pull up slightly on the lever, press the button and lower the lever.

If, in exceptional circumstances, it should be necessary to engage the parking brake while the vehicle is in motion, do not pull it with excessive pressure. Keep your thumb pressed against the release button while carefully pulling up the lever to apply moderate pressure.
Excessive pressure can lead to over-braking and loss of traction at the rear (fishtailing).
The brake lamps do not come on when the parking brake is engaged.
Vehicles with manual transmission:
Always engage the parking brake when parking on slopes and inclined surfaces, since even placing the gear-shift lever in 1st gear or reverse may not provide adequate resistance to rolling.
Vehicles with automatic transmission:
Place the selector lever in "P".◀

To avoid corrosion and one-sided braking, apply the parking brake lightly from time to time when coasting to a standstill (at a traffic signal, for instance), provided that it is safe to do so.

CarManuals2.com

Press the clutch pedal all the way down each time you shift, pressing the gear-shift lever into its proper end position.

Depress the clutch when starting the vehicle, too, otherwise, lockout will prevent the engine from starting.

The gearshift lever's neutral plane is located between 3rd and 4th gear.

When shifting from each gear into "Neutral", the gearshift lever returns automatically to this neutral position because of its spring loading.

Reverse

Select reverse only when the vehicle is stationary. Press the gearshift lever to the left to overcome the resistance.

As you do this, the backup lamps will turn on automatically when the ignition key is in position 2.

Do not hold the vehicle in place on slopes by slipping or "riding" the clutch. Use the parking brake instead, otherwise, the ensuing friction to the clutch plates will cause a great deal of wear and tear on the clutch.◀

CarManuals2.com

Automatic transmission with Steptronic*

You can drive as with a normal automatic transmission. In addition, you can also shift manually.

When you move the selector lever from the "D" position to the left into the M/S range, the performance-oriented shift programs of the automatic transmission are engaged. As soon as you briefly tab the selector lever in the "+" or "–" direction, Steptronic changes the gear. The manual mode is engaged. When you wish to use the automatic transmission mode again, move the selector lever to the right into the "D" position.

The automatic transmission of your BMW is equipped with Adaptive Transmission Control (ATC), a system which reacts with precision to your individual driving style and the driving conditions.

To achieve this, different shift programs are automatically engaged.

For additional details concerning the ATC, please refer to the chapter "Advanced technology" on page 164.

Selector lever positions

P R N D M/S + –

Starting the engine

The engine can only be started in selector lever positions P ("Park") or N ("Neutral").

Range selection

A detent prevents inadvertent shifts to the "Reverse" or "Park" selector lever positions. To disengage the detent, press the button on the front side of the selector lever knob (arrow).

While the vehicle is stationary and before shifting out of "Park" or "Neutral", depress the footbrake in order to disengage the selector lever's lock mechanism (Shiftlock).
Hold the footbrake down until starting off. The vehicle will otherwise "creep" when a drive position is engaged.◀

If you leave the vehicle with the engine running, move the selector lever to the "Park" or "Neutral" position and apply the parking brake. If you fail to do this, the vehicle could move.
Do not leave the vehicle unattended with the engine running. An unattended vehicle with a running engine represents a potential safety hazard.◀

CarManuals2.com

P – Park

Select only when the vehicle is stationary. The transmission locks to prevent the rear wheels from turning.

R – Reverse

Select only when the vehicle is stationary.

N – Neutral

Select only if your journey is interrupted for a longer period.

D – Drive (automatic shift program)

This position is designed for driving under all normal operating conditions. All forward gears are available.

Kickdown

In the kickdown mode, you achieve maximum performance and in position D, you reach maximum speed. Depress the accelerator pedal past the increased resistance point at the full-throttle position.

CarManuals2.com

M/S – manual mode and Sport Program

When you change from D to M/S, the Sport Program is activated. This is indicated by "S" in the gear selection display. The M/S mode is recommended for performance-oriented driving.
With the first brief touch, the automatic transmission shifts from the Sport Program to the manual mode. When you tab the selector lever in the "+" direction, the transmission shifts up. When the lever is tabbed in the "–" direction, the transmission shifts down. M1 to M5 is indicated in the transmission range display.
Upshifts or downshifts will only be carried out by the ATC at appropriate engine speeds and road speeds. If the engine speed is too high, for instance, the downshift will not be executed. The gear selected will appear briefly in the instrument cluster followed by the current gear.

▷ If you are driving in the manual mode and wish to accelerate rapidly – to pass another vehicle, for example – shift down manually or with the "Kickdown" function.◀

You can only change from M/S to selector lever positions "P", "R" and "N" via the "D" position.

In the following situations, the Steptronic "thinks" for you in the manual mode:

- ▷ In order to prevent engine overspeeding, the transmission shifts automatically to the next higher gear shortly before the engine speed cutoff point
- ▷ At low speeds, the transmission shifts down automatically – you do not have to act
- ▷ In the kickdown mode, the transmission shifts down to the lowest possible gear based on the engine speed
- ▷ Depending on the situation – when driving in adverse winter conditions, for example – the transmission may also start out in 2nd or 3rd gear.

Available displays

S M1 M2 M3 M4 M5

Electronic transmission control module

If the indicator lamp comes on there is a fault in the transmission system.

All of the selector lever positions can continue to be used; in the forward drive positions, however, the vehicle will be operating with restricted gear availability.

If this happens, avoid extreme engine loads and consult the nearest BMW center.

Do not work in the engine compartment when a drive gear (forward or reverse) is engaged. If you do so, the vehicle could move.◀

Information on jump-starting, tow-starting and towing, refer to pages 158, 159.

CarManuals2.com

Turn signals/High beams

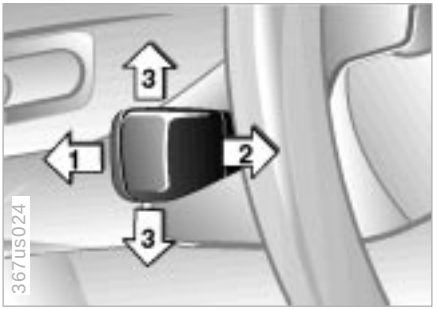

1 High beams (blue indicator lamp)

2 Headlamp flasher (blue indicator lamp)

3 Turn signal indicators (green indicator lamp and rhythmic clicking of the relay)

If the indicator lamp and the clicking from the relay are both faster than normal, one of the turn signal indicators has failed.

To signal briefly

Press the lever up to but not beyond the pressure point. It then returns to the center position when released.

Windshield

0 Wipers retracted

1 Intermittent operation

2 Normal wipe

3 Fast wipe

4 Brief wipe

5 Cleaning the windshield

Rear window – Z3 coupe only

6 Intermittent operation/cleaning the rear window

0 Wipers retracted

The wipers are partially hidden behind the hood. To bring the wipers up into their vertical position (important when changing the blades, or folding up when frost is expected):
Switch on the wipers and switch off the ignition when the wipers are approximately vertical.

CarManuals2.com

⚠ Fold the wipers down onto the windshield before turning on the ignition key. Failure to do this could result in damage to the wiper/washer system and hood.◀

1 Intermittent operation

The length of the interval is varied automatically according to the vehicle's actual road speed.

2 Normal wipe

The wipers automatically revert to intermittent operation when the vehicle is stationary.

3 Fast wipe

When the vehicle is stationary, the system does not switch to a lower wiper speed.

4 Brief wipe

The wipers move once across the windshield.

5 Cleaning the windshield

The system sprays washer fluid against the windshield and activates the wipers for a brief period.

If you only pull the lever briefly, the system sprays washer fluid onto the windshield without activating the wipers.

6 Intermittent operation/ Cleaning the rear window

Press the lever briefly:
The intermittent setting of the rear window wiper is switched on or off.

Press and hold the lever:
The system sprays washer fluid against the rear window and activates the wiper. After the lever is released, the wiper continues to cycle for a few seconds.

To change the wiper blades, refer to page 136.

Cleaning the headlamps*

If the headlamps are on, they will also be cleaned every fifth time you activate the cleaning the windshield 5 mode.

⚠ Do not use the washers if there is any danger that the fluid will freeze on the windshield, otherwise vision could be obscured. For this reason, use an antifreeze agent, refer to page 122. Do not use the washers when the reservoir is empty, otherwise damage to the washer pump could result.◀

Windshield washer nozzles

The windshield washer nozzles are heated automatically* when the ignition key is in position 2.

CarManuals2.com

Rear window defroster

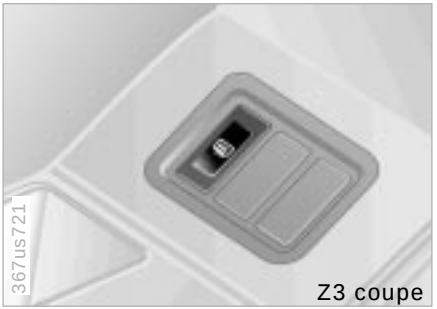

Z3 coupe

The Z3 coupe is equipped with a rear window defroster.

To switch on

Press the button, the indicator lamp comes on.

To switch off

Press the button if the indicator lamp is on.

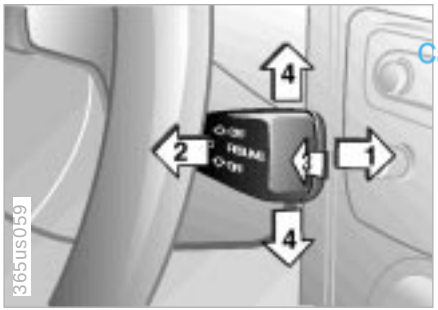

You can maintain and store any desired vehicle speed above approx. 25 mph (40 km/h).

The system is switched off and the stored speed deleted from its memory when you turn the ignition key to position 0.

Do not use the cruise control on winding roads, when high traffic density prevents driving at a constant speed, when the road surface is slick (snow, rain, ice) or when the road surface is loose (rocks or gravel, sand).◀

To maintain and store speed/ to accelerate

CarManuals2.com

Press the lever briefly in direction 1:
The system maintains and stores the current vehicle speed. Every time you briefly press the lever, the speed increases by approx. 0.6 mph (1 km/h).

Hold the lever in position 1:
The vehicle accelerates without pressure on the accelerator pedal. When you release the lever, the system maintains and stores the current speed.

If, on a downhill grade, the engine braking effect is not sufficient, the controlled speed can be exceeded. Speed can drop on uphill grades if the engine output is insufficient.◀

To decelerate

Press the lever briefly in direction 2:
If you are already driving with active cruise control, the speed is decreased by approx. 0.6 mph (1 km/h) every time you briefly touch the lever.

Hold the lever in position 2:
With the cruise control active, the system automatically reduces the throttle opening to slow the vehicle. When you release the lever, the system maintains and stores the current speed.

Call up stored setting (resume)

Press the lever briefly in direction 3:
The vehicle accelerates to and maintains the last speed stored.

To deactivate

Press the lever briefly in direction 4:
The cruise control is deactivated immediately.

In addition, the system is also automatically deactivated in response to the following conditions:

- ▷ When you apply the brakes
- ▷ When you depress the clutch or move the automatic transmission selector lever from "D" to "N"
- ▷ If you exceed or fall below the preset speed for an extended period (by depressing the accelerator, for example).

Odometer

1 Odometer

You can activate the displays shown in the illustration with the ignition key in position 0 by pressing the button in the instrument cluster (arrow).

2 Trip odometer/Gear indicator for automatic transmission with Steptronic*

Trip odometer:

To reset the trip odometer to zero, press the button (arrow) with the ignition key in position 1 or higher.

Gear indicator:

▷ S for Sport Program
▷ M1 to M5 for manual mode.

Tachometer

CarManuals2.com

Never allow the engine to operate with the needle in the red overspeed sector of the gauge.

To protect the engine, the engine-management system automatically interrupts the fuel supply in this range; you will notice a loss of power.

Fuel gauge

When you switch on the ignition, the indicator lamp comes on briefly to confirm that the system is operational.

Once the indicator lamp stays on continuously, there are still approx. 2.1 gallons (8 liters) of fuel in the fuel tank.

Tank capacity: page 173.

If the tilt of the vehicle varies (extended driving in mountainous areas, for example), the needle may fluctuate slightly.

⚠ Please refuel early, since driving to the last drop of fuel can result in damage to the engine and/or catalytic converter.◀

Coolant temperature gauge

Between the blue and red zones

Normal operating range. It is not unusual for the needle to rise as far as the edge of the red zone in response to high outside temperatures or severe operating conditions.

Checking coolant level, refer to page 125.

Blue

The engine is still cold. Drive at moderate engine and vehicle speeds.

Red

When you switch on the ignition, the warning lamp comes on briefly to confirm that the system is operational.

Comes on while driving: the engine is overheated. Switch off the engine immediately and allow it to cool down.

Carmanuals2.com

Service Interval Display

Green lamps

The number of illuminated lamps decreases as the time for your next maintenance visit approaches.

Yellow lamp

This field appears together with OILSERVICE or INSPECTION.

This alerts you that maintenance is due. Please arrange for an appointment with your BMW center.

Red lamp

Maintenance is overdue.

Clock

You can correct the time by pressing the buttons (arrows) with a sharp object such as a ball-point pen.

Set the clock forward by pressing the right button; set the clock back by pressing the left button.

Computer*

CarManuals2.com

Mode selection

You can call up the computer data in the display from ignition switch position 1 with the turn indicator lever. Press the button briefly to select the next display mode.

In addition, you can display the time by pressing the button.

With the button, the calculations for average fuel consumption and speed are reset and begin again.

Time

The display is provided at ignition key position 1 or higher. In ignition key position 0, the time is displayed for approx. 8 seconds by pressing the button.

Following a power loss, the clock automatically switches to the setting mode: the colon flashes. Two dashes are displayed for entering the hour.

Online Edition for Part No. 01 41 0 156 441 - © 10/01 BMW AG

To enter the time

Enter the numbers for hours and minutes by pressing the button.

Enter the hour first. Each time the button is pressed, the hour display increases by one. Pressing and holding the button starts the rapid advance.

Confirm the time set with the button. Now enter the minutes when two zeros appear.

Enter the minutes in the same manner as the hours.

Press the save button : the time is started exactly on the second. The colon stops flashing.

To reset the time

Press and hold the button for approx. 3 seconds: enter the hour when the colon begins to flash.

Enter the numbers by pressing the button in the same manner as when entering the time.

Setting the 12-hour or 24-hour mode

Press and hold the buttons simultaneously for approx. 1 second.

Then press the button. Now, the mode changes from 12 to 24 hours whenever you press the button.

When you select the 12-hour mode, AM or PM will appear on the right-hand side of the display panel.

The last mode selected is adopted when you press or automatically stored approx. 5 seconds after the last setting.

CarManuals2.com

Outside temperature

If the outside temperature drops to approx. +37.5 °F (+3 °C), a warning signal sounds (ice warning). The temperature display appears automatically and flashes for 8 seconds.

The warning is repeated whenever the temperature has reached at least +43 °F (+6 °C) and then drops to +37.5 °F (+3 °C) again.

The ice warning does not alter the fact that surface ice can form at temperatures above +37.5 °F (+3 °C), on bridges or shaded road surfaces, for instance.◀

Average fuel consumption

The calculation is made when the engine is running. Periods when the vehicle is parked and the engine is not running are not included.

New calculation:
When this function has been activated and you press the S/R button, the fuel consumption is recalculated from that point in time.

Estimated cruising range

The computer bases its calculations of the cruising range on the previous driving style and on the remaining fuel.

CarManuals2.com

When three dashes flash in the display, the cruising range is below 9 miles (15 km). You should refuel as soon as possible.

Refueling is registered by the computer with the ignition key in position 1 or higher.

▷ If the vehicle has been parked at an angle, the cruising range cannot be displayed accurately. The display will be corrected while the vehicle is moving.◀

Average speed

Periods when the vehicle is parked and the engine is switched off are not included in the calculation.

At speeds below 100 mph or 100 km/h, the display includes decimals.

New calculation:
When this function has been activated and you press the S/R button, the average speed is recalculated from that point in time.

The concept

This system helps provide additional dynamic stability, particularly when starting off, accelerating and cornering.

ASC+T recognizes the danger present in traction loss and will increase driving stability and traction by reducing the engine's output, and if necessary, by applying the brakes individually to the rear wheels.

ASC+T is available as soon as the engine starts up.

Indicator lamp

The indicator lamp in the instrument cluster goes out shortly after you switch on the ignition, refer to page 22.

The indicator lamp flashes:
ASC+T controls the drive and braking forces.

If the indicator lamp fails to go out after the engine is started, or if it comes on during normal driving and stays on: There is a system malfunction or the system was switched off with the button. Consequently, interventions to increase driving stability (as described in the preceding column) are not available. You can still drive the vehicle normally without ASC+T.
In the event of a malfunction, please consult your BMW center.

Switch off ASC+T

Press the button (arrow); the indicator lamp comes on and stays on.

In the following rare situations, it may be effective to switch off the ASC+T for a brief period:

- ▷ When rocking the vehicle or starting off in deep snow or on loose surfaces
- ▷ When driving with snow chains.

To maintain vehicle stability, drive with the ASC+T switched on whenever possible.◀

CarManuals2.com

Reactivate the ASC+T

Press the button again; the indicator lamp goes out.

The laws of physics cannot be repealed, even with ASC+T. It will always be the driver's responsibility to drive in a manner that matches road conditions. We therefore urge you to avoid using the additional safety margin of the system as an excuse for taking risks.◀

For additional details concerning ASC+T, please refer to the chapter, "Advanced technology," page 165.

Dynamic Stability Control (DSC)*

The concept

DSC maintains vehicle stability, even in critical driving situations.

The system optimizes vehicle stability during acceleration and when starting from a full stop, as well as optimizing traction. In addition, it recognizes unstable vehicle conditions, such as understeering or oversteering, and, as far as is possible within the laws of physics, helps keep the vehicle on a steady course by reducing the engine speed and brake applications to the individual wheels.

The DSC is operational every time you start the engine. DSC includes the functions of ADB and CBC, refer to page 102.

The ADB (Automatic Differential Braking) copies the function of conventional differential and transverse locks through brake intervention, and increases traction whenever conditions merit, e.g. when driving on snow-covered roads.

If the DSC is deactivated the ADB is in ready mode.

Indicator lamp

The indicator lamp in the instrument cluster goes out shortly after you switch on the ignition, refer to page 22.

The indicator lamp flashes:
DSC controls the drive and braking forces.

The indicator lamp stays lit:
DSC has been switched off via the button; ADB is in ready mode.
ADB control intervention is not indicated.

The indicator lamp and the brake warning lamp remain on:
The DSC, ADB and DBC have been switched off via the button or are defective.

BRAKE

The vehicle will remain completely operational, however without DSC. In the event of a fault, please see your BMW center.

Indicator and warning lamps for Canadian models.

CarManuals2.com

Switch off DSC/activate ADB

Press the DSC switch (arrow) – the indicator lamp comes on and remains on.

DSC has been switched off; ADB is in ready mode.

In the following exceptional circumstances, it may be effective to activate the ADB for a short period:

- When rocking the vehicle or starting off in deep snow or on loose surfaces
- When driving on snow-covered grades, in deep snow, or on a snow-covered surface that has been packed down from being driven on
- When driving with snow chains.

Switch off DSC and ADB

Hold the DSC switch down for at least 3 seconds. The indicator lamp and the red warning lamp for the brake hydraulic system remain on.

CarManuals2.com

In this case, no interventions to increase stability and traction for engine and brakes are carried out.

To maintain vehicle stability, drive with the DSC switched on whenever possible.◀

Reactivate DSC and ADB

Press the button again; the indicator lamp or the indicator lamps will go out.

The laws of physics cannot be repealed, even with DSC. It will always be the driver's responsibility to drive in a manner that matches road conditions. We therefore urge you to avoid using the additional safety margin of the system as an excuse for taking risks.
The DSC is deactivated and will not carry out any stabilizing intervention when the ADB is in ready mode.
Do not make any modifications to the DSC system. Allow only authorized technicians to perform service procedures on the DSC.◀

You will find additional details concerning DSC in the chapter "Advanced technology" on page 165.

Parking lamps/Low beams

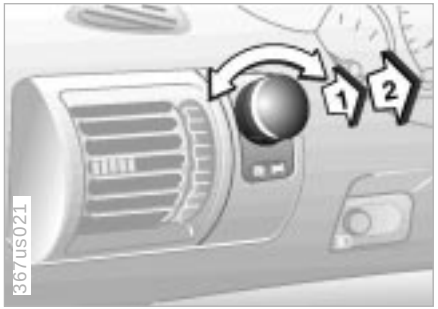

Parking lamps (position lamps/ side marker lamps)

Position 1
With the switch in this position, vehicle lighting on both sides is on.

Low beams

Position 2
When you switch the ignition off while the low beams are still on, only the parking lamps (position lamps/ side marker lamps) remain on.

Instrument panel lighting

In order to adjust the illumination intensity, turn the pulled switch.

LIGHTS ON warning

When you open the driver's door after turning the ignition key to position 0, a warning signal sounds for a few seconds to remind you if the headlamps have not been switched off.

Daytime driving lamps*

The headlamps are automatically switched on for daylight driving at ignition key position 2.

CarManuals2.com

Fog lamps

Front fog lamps*

A green indicator lamp comes on in the instrument cluster to indicate that the front fog lamps are on.

It is not possible to switch on the front fog lamps together with the high beams.

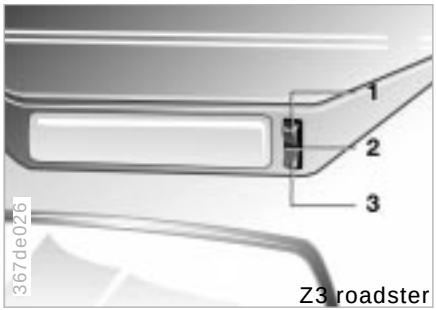

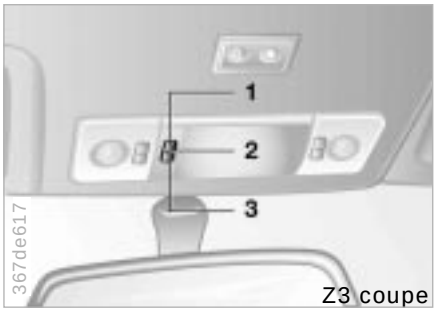

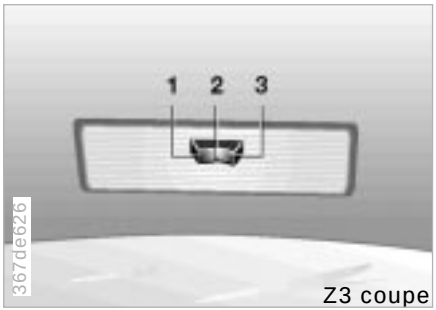

Z3 roadster

1 Continuously off

2 Automatically controlled

3 Continuously on

Z3 coupe – front

1 Continuously on

2 Continuously off

3 Automatically controlled

CarManuals2.com

Z3 coupe – rear

1 Continuously on

2 Continuously off

3 Automatically controlled

Reading lamps

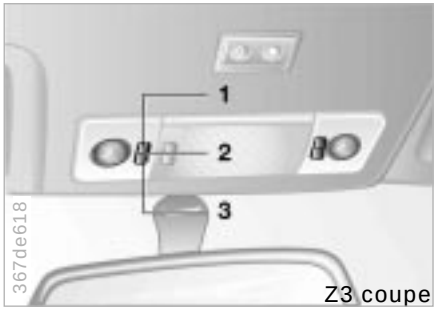

Z3 coupe

The Z3 coupe is equipped with reading lamps:

1 Continuously on

2 Continuously off

3 Automatically controlled

In order to conserve the battery, all of the lamps in the vehicle are switched off about 15 minutes after the ignition key is turned to position 0.◀

CarManuals2.com

CarManuals2.com

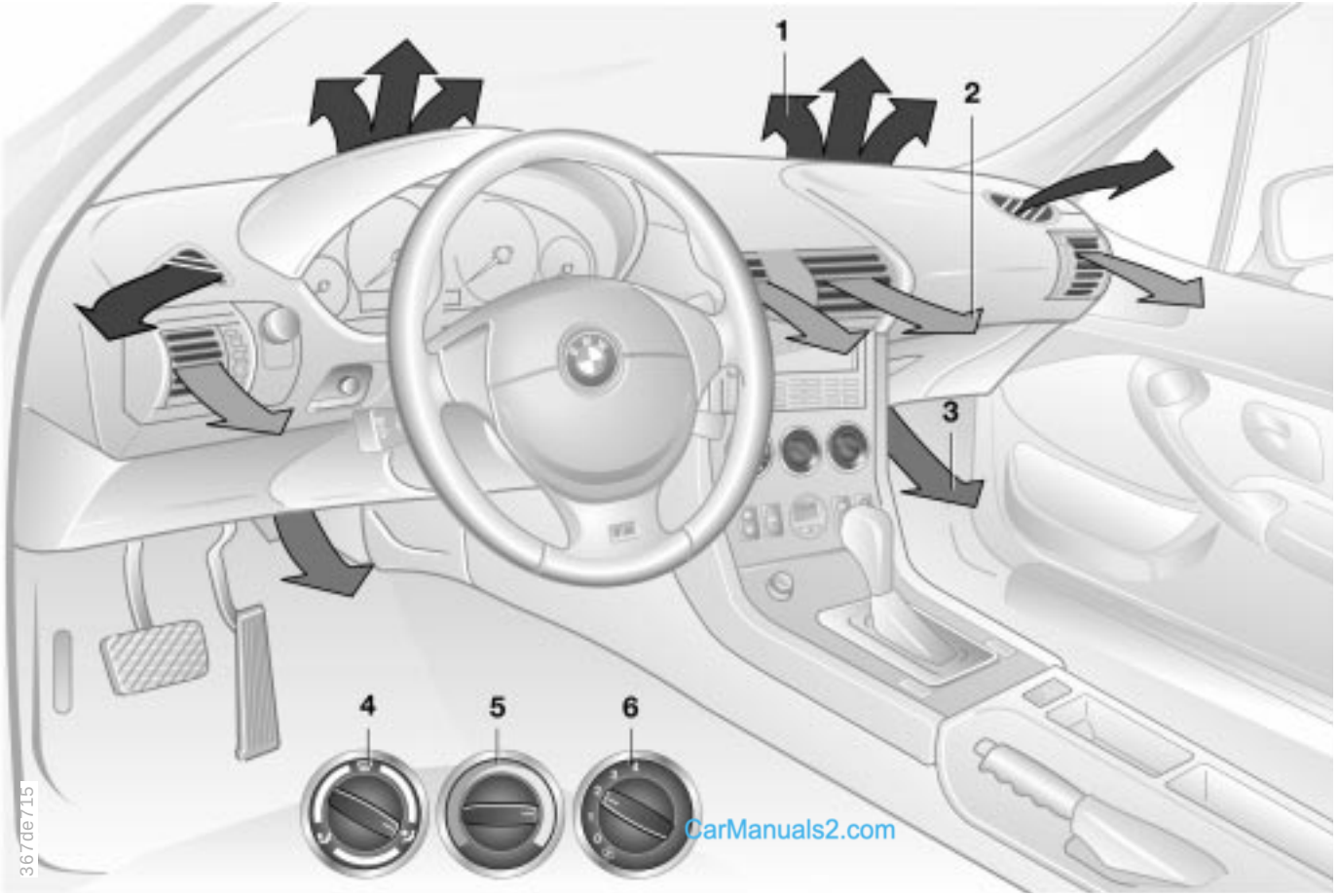

Online Edition for Part No. 01 41 0 156 441 - © 10/01 BMW AG

1 Airflow toward the windshield and side windows

2 Airflow toward upper body
The rotary dials allow infinitely-variable regulation of the air supply. You can change the airflow direction with the lever in the center of the vent or by rotating the vent grille 82

3 Front footwell ventilation

4 Air distribution onto the
▷ windows
▷ upper body
▷ footwell
All intermediate settings are possible 82

5 Temperature 82

6 Air supply
The heating and ventilation are operational beginning with position 1 82

CarManuals2.com

Air distribution

You can direct the airflow onto the windows, toward the upper body and into the foot-well. All intermediate settings are possible. In this position, a small volume of air is directed onto the windows in order to keep them free of condensation.
A "6 o'clock" position is recommended as the normal operating setting.

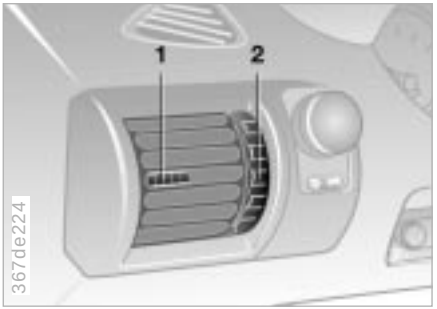

Temperature

In order to increase the temperature of the passenger compartment, turn to the right (red). For rapid heating, turn completely to the right. Then select an interior temperature which is pleasant for you.

Air supply

You can select blower speeds from 1 to 4. Both heating and ventilation become more effective as the air supply rate is increased. In position 0, the blower and the heater are switched off.

Draft-free ventilation

You can adjust the air outlets for the upper body area completely for your personal comfort:

CarManuals2.com

Use the rotary dial 2 to open and close the vent throughout an infinitely-variable range. With the levers 1, you can direct the airflow to the side. Adjust the airflow up or down by rotating the vent grill.

Set the outlets so that the air flows past you and is not directed straight at you.

Rapid ventilation

1. Set the blower speed control for the air supply rate to position 4
2. Turn the rotary temperature control completely to the left (blue). Then select an interior temperature which is pleasant for you
3. Rotary control for air distribution in position
4. Open the outlets for the upper body area.

Rapid heating

1. Set the blower speed control for the air supply rate to position 3
2. Turn the rotary temperature control completely to the right (red). Then select an interior temperature which is pleasant for you
3. Rotary dial for air distribution in position .

Heating

This setting is recommended if the windows are free of ice or condensation:

1. Set the blower speed control for the air supply rate to position 2
2. Use the rotary temperature control to select an interior temperature which is pleasant for you
3. Rotary control for air distribution in position .

To defrost windows and remove condensation

1. Set the blower speed control for the air supply rate to position 4
2. Turn the rotary temperature control completely to the right (red)
3. Rotary control for air distribution in position
4. To defrost the rear window on the coupe, switch on the rear window defroster.

CarManuals2.com

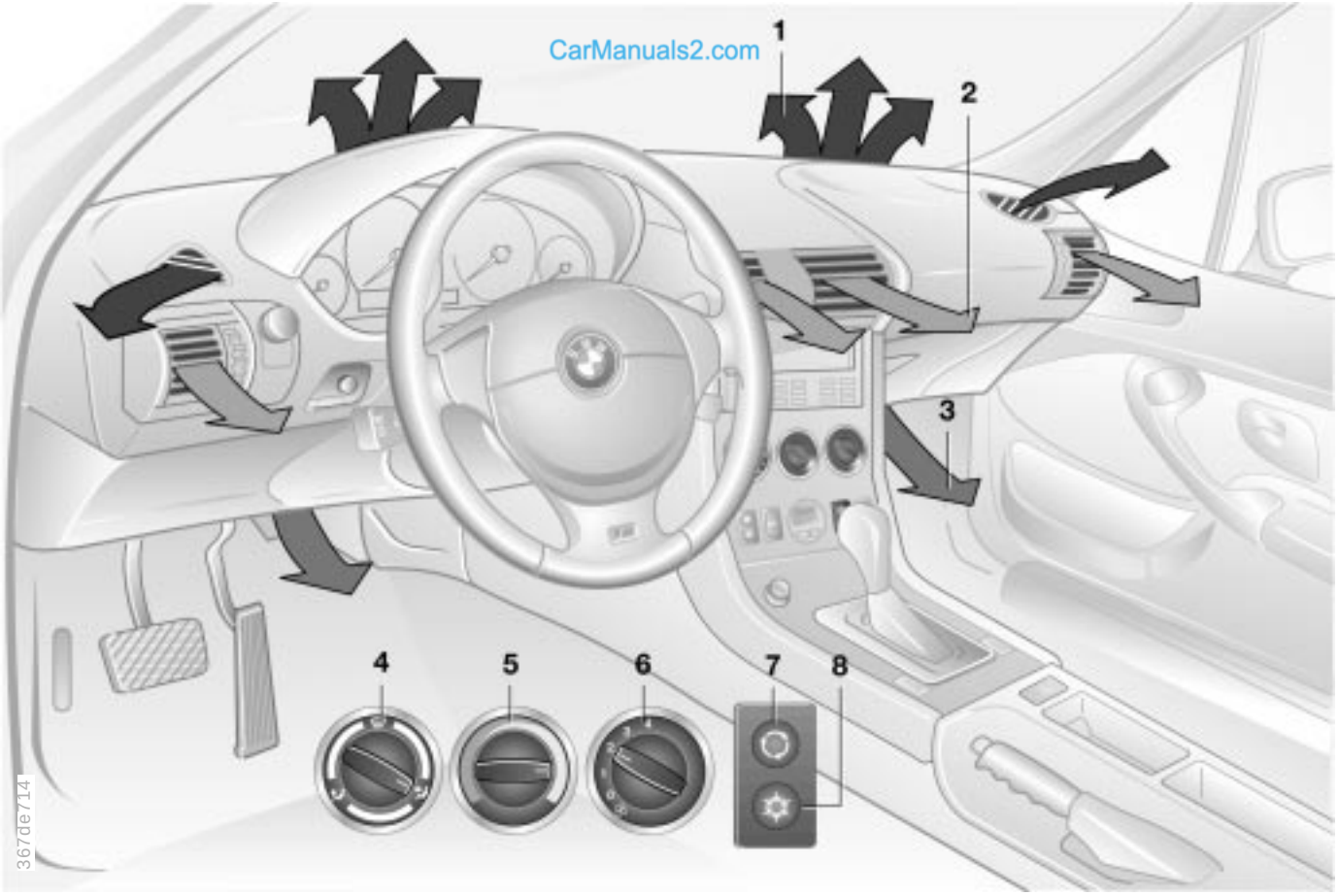
CarManuals2.com
1
2
3
4
5
6
7
8
367de714

Heating and ventilation/Air conditioner*

1 Airflow toward the windshield and side windows

2 Airflow toward upper body
The rotary dials allow infinitely-variable regulation of the air supply. You can change the airflow direction with the lever in the center of the vent or by rotating the vent grille 87

3 Front footwell ventilation

4 Air distribution onto the
▷ windows
▷ upper body
▷ footwell
All intermediate settings are possible 86

5 Temperature 86

6 Air supply
The heating and ventilation are operational beginning with position 1 86

7 Recirculated-air mode 86

8 Air conditioner 86

CarManuals2.com

Air distribution

You can direct the flow of air onto the windows, toward the upper body and into the footwell. All intermediate settings are possible. In position, a small volume of air is directed onto the windows in order to keep them free of condensation.
A "6 o'clock" position is recommended as the normal operating setting.

Temperature

In order to increase the temperature of the passenger compartment, turn to the right (red). For rapid heating, turn completely to the right. Then select an interior temperature which is pleasant for you.

Air supply

You can select blower speeds from 1 to 4. Both heating and ventilation become more effective as the air supply rate is increased. In position 0, the blower and the heater are switched off.

Air conditioner

The air is cooled and dehumidified and – depending on the temperature setting – warmed again when the air conditioner system is switched on. Depending on the weather, the windshield may fog over briefly when the engine is started.
Use the button to switch the air conditioner off at outside temperatures below approx. 41 °F (+5 °C). This will help to prevent condensation from forming on the windows.
If the windows fog over after switching the air conditioner off, switch it back on.

CarManuals2.com

Condensation forms in the air conditioner system during operation, which then exits under the vehicle. Traces of condensed water of this kind are thus normal.◀

Recirculated-air mode

If there are unpleasant odors in the outside air, you can temporarily block the supply of the incoming air. The system then recirculates the air currently within the vehicle.

If the windows fog over in the recirculated-air mode, switch this mode off and increase the air supply as required.◀

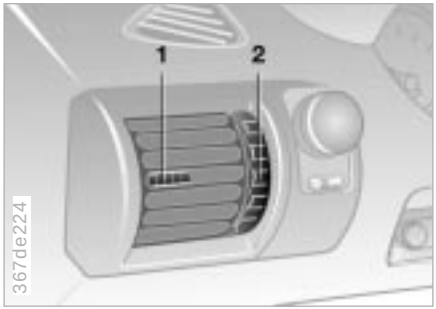

Draft-free ventilation

You can adjust the air outlets for the upper body area completely for your personal comfort:

Use the rotary dial 2 to open and close the vent throughout an infinitely-variable range. With the levers 1 you can direct the airflow to the side, and up or down by rotating the vent grill.

Set the outlets so that the air flows past you and is not directed straight at you.

Rapid ventilation

1. Set the blower speed control for the air supply rate to position 4
2. Switch on the air conditioner*
3. Turn the rotary temperature control completely to the left (blue). Then select an interior temperature which is pleasant for you
4. Rotary control for air distribution in position
5. Open the outlets for the upper body area.

Cooling

1. Set the blower speed control for the air supply rate to position 2
2. Switch on the air conditioner*
3. Use the rotary temperature control to select an interior temperature which is comfortable for you
4. Rotary control for air distribution in position
5. Open the outlets for the upper body area.

CarManuals2.com

Heating

This setting is recommended if the windows are free of ice and condensation:

1. Set the blower speed control for the air supply rate to position 2
2. Use the rotary temperature control to select an interior temperature which is pleasant for you
3. Rotary control for air distribution in position .

Rapid heating

1. Set the blower speed control for the air supply rate to position 3
2. Turn the rotary temperature control completely to the right (red). Then select an interior temperature which is pleasant for you
3. Rotary dial for air distribution in position .

CarManuals2.com

To defrost the windows and remove condensation

1. Set the blower speed control for the air supply rate to position 4
2. Turn the rotary temperature control completely to the right (red)
3. Rotary control for air distribution in position
4. To defrost the rear window on the coupe, switch on the rear window defroster.

Seat heating*

The seat cushion and backrest can be heated at ignition key position 2.

Press the buttons with the heating symbols:

Rapid heating as long as the button comes on brightly. Automatic changeover to regular heating.

Heating as long as the button comes on brightly. Heating switches off automatically.

To switch over while heating: press the section of the button that is dimly lit.

To switch off early: press the section of the button that is brightly lit.

CarManuals2.com

Glove compartment

To open

Pull the handle and push down the door.

To close

Push the door up.

To prevent injury in the event of an accident, close the glove compartment immediately after use.◀

Storage compartments

Storage compartments are located in the center console, in the doors and, on the Z3 coupe, between the backrests (refer to the illustration).

CarManuals2.com

A coin box* is located in the door pocket on the driver's side.

A storage net is mounted on the passenger side of the center console.

Storage boxes*

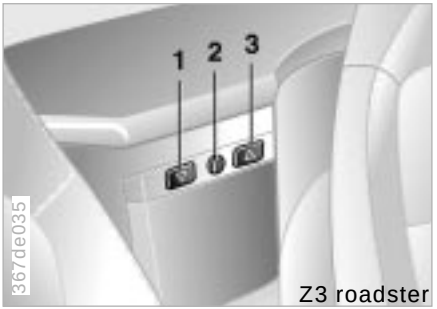

The Z3 roadster has locking storage boxes*:

Small storage box

Press button 1 to open the box.

Large storage box

Press button 3 and lift the lid of the box.

Both of the storage boxes can be locked with the master keys (refer to page 30) at lock 2.

Beverage holder*

The beverage holder is located in the center console next to the parking brake.

You will find a coin box in front of the beverage holders.

Ashtray*

To open

Press down on the left of the lid (arrow).

To extinguish a cigarette, tap off the ash and gently press the tip into the funnel.

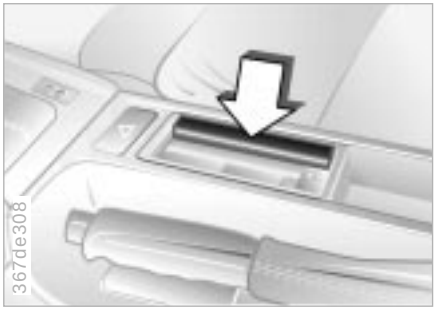

To empty

Open the lid and press down (arrow):

The ashtray insert pops up and can be removed.

CarManuals2.com

Cigarette lighter*

Press in. The lighter can be removed as soon as it pops up.

Hold or touch the hot cigarette lighter by the knob only. Holding or touching it in other areas could result in burns.
The cigarette lighter remains operational when the ignition key has been removed. For this reason, children should never be left in the vehicle unattended.◀

Cigarette lighter socket

This socket can be used for connecting a flashlight, car vacuum cleaner, or other appliances up to approx.
200 watts at 12 volts. Do not damage the socket by inserting plugs of a different shape or size.

CarManuals2.com

Non-smoker's equipment package*

On vehicles with the non-smoker's equipment package, the socket is concealed by a cover.

For access to the socket: lift the cover off.

Roll-up cover

Z3 coupe

Pull out the roll-up cover and hook it into the holders at the rear.

The roll-up cover can carry light items such as articles of clothing.

Do not place heavy or hard objects on the roll-up cover. These objects could endanger vehicle occupants during heavy brake applications and evasive action or in a crash. Do not allow the roll-up cover to snap back when it is retracted. This could damage it.◀

Partition net*

Z3 coupe

Pull out the partition net on the strap and grip the bar firmly with the other hand. Then grasp the bar on both sides, pull it up and position it into the holders. This process will work out best if you do it from inside the passenger compartment.

Do not allow the partition net to snap back when it is retracted. If this is done, there is a risk of personal injury, and the partition net could be damaged.◀

CarManuals2.com

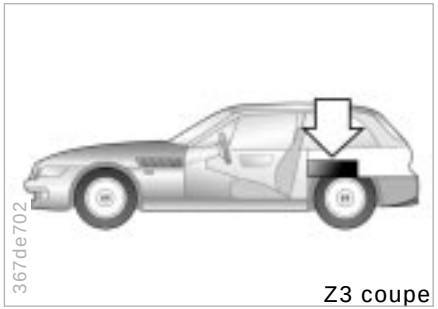

CarManuals2.com

Stowing cargo

If you are transporting cargo in your coupe:

- ▷ Load heavy cargo as far forward as possible – directly behind the luggage compartment partition – and as low as possible
- ▷ Cover sharp edges and corners
- ▷ Do not pile objects higher than the top edge of the backrest
- ▷ Pull the partition net* out (refer to page 93). Be sure that no items are able to penetrate the partition net.

Securing cargo

For securing luggage, you can obtain load-securing devices* from your BMW center. The lashing eyes located in the luggage compartment serve for mounting these load-securing devices.

Comply with the information enclosed with the load-securing devices.

⚠ Always position and secure the cargo correctly. If you do not, it can endanger the passengers during braking or evasive maneuvers, for example.
Do not exceed the approved gross vehicle weight or the specified maximum axle loads (refer to page 172), otherwise the vehicle's operating safety is no longer assured and you are in violation of the law.
Do not carry hard or heavy objects unsecured in the passenger compartment. If you do so, they may be projected through the air during braking and evasive maneuvers, for example, thus endangering vehicle occupants.◀

Roof-mounted luggage rack

A special roof-rack system is available for your coupe as an optional accessory. Please comply with the precautions included with the installation instructions.

Roof-mounted luggage racks raise the center of gravity of the vehicle when they are loaded. For this reason, they have a major effect on the vehicle's handling and steering response.
You should therefore always remember not to exceed the approved roof load capacity, the approved gross vehicle weight or the axle loads when loading the rack. You will find the specifications for this under "Technical Data" on page 172.

Make sure that the load is not too large in size, and distribute it evenly. Always load the heaviest pieces first (on the bottom). Be sure that adequate clearance is maintained for raising the sunroof, and that objects do not project into the opening path of the luggage compartment lid.

Secure the roof luggage correctly and securely to prevent it from shifting or being lost during driving (danger to following traffic).◀

Drive smoothly and avoid sudden acceleration and braking. Do not corner at high speeds.

CarManuals2.com

CarManuals2.com

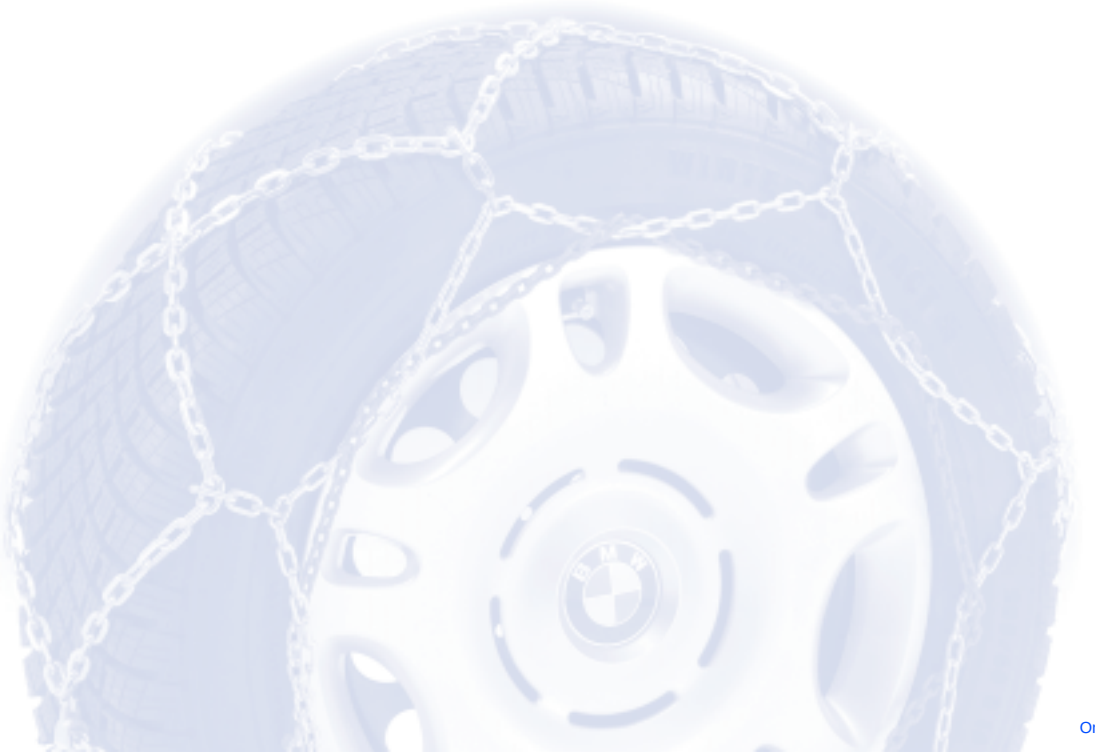

Special operating instructions:
Break-in procedure 98
Driving notes 99
Catalytic converter 100
Antilock Brake System (ABS) 101
Disc brakes 103
Brake system 104
Winter operation 105
Power steering 106
Cellular phone 107
Car radio reception 107
Hardtop – roadster 108

Wheels and tires:
Notes on inflation pressures 110
Tire condition 110
Tire replacement 111
Tire rotation 113
Wheel and tire combinations 114
Special features of winter tires 115
Snow chains 115
Approved wheel and tire specifications 116

In the engine compartment:
Hood 118
Engine compartment 120
Fluids for the washer systems 122
Washer nozzles 122
Engine oil 123
Coolant 125
Brake fluid 126
Vehicle Identification 127

Care and maintenance:
The BMW Maintenance System 128
Airbags 130
Storing your vehicle 130

Laws and regulations:
Technical modifications 132
California Proposition 65 Warning 132
OBD interface socket 133

CarManuals2.com

Break-in procedure

To ensure that your vehicle provides maximum economy throughout a long service life, we request that you observe the following:

Engine and differential

Up to 1,200 miles (2,000 km):
Drive with varying engine and road speeds, but do not exceed 4,500 rpm or 100 mph (150 km/h).

Comply with local and state maximum speed limits.

Refrain from using full throttle and avoid pressing the accelerator beyond the kickdown point.

After you have driven 1,200 miles (2,000 km), you can gradually increase the engine and road speeds.

You should also comply with these break-in procedures if the engine or differential is replaced later in the course of the vehicle's service life.

Tires

CarManuals2.com

Due to technical factors associated with their manufacture, tires do not achieve their full traction potential until an initial break-in period has elapsed. You should therefore drive with extra caution during the initial 200 miles (300 km).

Comply with local and state maximum speed limits.

When the vehicle is operated on wet or slushy roads, a wedge of water may form between the tire and the road surface. This phenomenon is referred to as aquaplaning or hydroplaning, and can lead to partial or complete loss of traction, vehicle control and braking effectiveness. Reduce your speed on wet roads.◀

Brake system

Approx. 300 miles (500 km) must elapse before the brake pads and rotors achieve the optimal surface and wear pattern.

To break-in the separate parking brake drums, apply the parking brake lightly when coasting to a standstill (at a traffic signal, for instance), provided that traffic conditions allow you to do so. To avoid corrosion, repeat this procedure from time to time.

The brake lamps do not light up when the parking brake is applied.

Vacuum for the brake system booster on your BMW is available only when the engine is running. When you move the vehicle with the engine off – for instance, by towing – substantially higher levels of pedal force will be required to brake the vehicle.◀

Clutch

The clutch will reach optimal function after approx. 300 miles (500 km). Shift gears carefully during the break-in period.

Brakes:
Do not drive with your foot resting on the brake pedal. Even light but consistent pedal pressure can lead to high temperatures, brake wear and possibly even brake failure.

Aquaplaning:
When driving on wet or slushy roads, reduce vehicle speed. If you do not, a wedge of water may form between the tires and the road surface. This phenomenon is referred to as aquaplaning or hydroplaning. It is characterized by a partial or complete loss of contact between the tires and the road surface. The ultimate results are loss of steering and braking control.

Driving through water:
When there is water on the roads, do not drive in it if it is deeper than 1 ft (30 cm). If the water is at that depth, drive only at walking speed, otherwise the vehicle can sustain damage to the engine, the electrical systems and the transmission.

Clothes hooks (coupe):
Hang items of clothing on the hooks in such a manner that they do not obstruct the driver's vision. Do not hang heavy objects on the hooks. If you do so, they could cause personal injury during braking or evasive maneuvers.◀

CarManuals2.com

Catalytic converter

The catalytic converter reduces harmful exhaust emissions.

It is designed for use with unleaded fuel only.
Even minute quantities of lead would be enough to permanently damage both the catalytic converter and the system's oxygen sensor.

To ensure efficient, trouble-free engine operation and avoid potential damage:

- ▷ Be sure to comply with the scheduled maintenance requirements
- ▷ Fill the fuel tank well before it is empty
- ▷ If the engine runs roughly, shut it off as soon as possible
- ▷ Tow-start the vehicle only when the engine is cold. Tow-starting when the engine is warm could cause unburned fuel to ignite on the way to the catalytic converter, resulting in significant damage. It is better to start the vehicle with an outside starting aid
- ▷ Avoid any other situations in which the fuel would not be (completely) burned, for instance:
  Frequent or consecutive extended starting attempts or repeated starting attempts when the engine fails to start. (Shutting down and restarting an engine which is running properly does not present a problem.) Never allow the engine to run with any of the spark plug cables disconnected.

CarManuals2.com

⚠ Be sure to comply with the instructions above to prevent unburned fuel from reaching the catalytic converter. Otherwise, the catalytic converter could respond by overheating, leading to serious damage.
Extreme temperatures occur at the catalytic converter on this and every catalyst-equipped vehicle. Heat shields are installed adjacent to some sections of the exhaust system. Never remove these shields; do not apply undercoating to their surfaces.
When driving, standing while the engine is idling, or when parking, be careful to avoid contact between the hot exhaust system and easily-flammable materials (hay, dry grass, leaves, etc.). Such contact could cause a fire, resulting in personal injuries and property damage.◀

The concept

The Antilock Brake System (ABS) keeps the wheels from locking during braking, thereby enhancing active driving safety. The reason: locked wheels are dangerous. When the front wheels slide, the driver loses steering control over the vehicle. Traction loss at the rear wheels can cause the rear end to break into an uncontrolled skid.

The system can achieve the shortest braking distances possible under most conditions (on straight-aways or in curves, on the various road surfaces).

ABS is designed to meet two essential requirements during every brake application:

▷ To help provide vehicle stability
▷ Assured ability to steer and maneuver on the various road surfaces (asphalt, concrete, dirt, wet conditions, snow and ice).

Braking with ABS

CarManuals2.com

The system is operative once the vehicle exceeds a speed of approx. 6 mph (10 km/h). It is inactive once again below approx. 4 mph (6 km/h). Therefore, the wheels could theoretically tend to lock in the final phase of a braking action, but this is insignificant in actual practice.

If you are in a situation which requires full braking, you will exploit the full benefits of the ABS system if you apply maximum brake pressure ("panic stop"). Since the vehicle maintains steering responsiveness, you can avoid possible obstacles with a minimum of steering effort, despite the full brake application.

The ABS closed-loop control circuit cycles in fractions of a second. The pulsation at the brake pedal, together with sounds generated by the hydraulic control system, indicate to you that the vehicle is approaching its maximum braking range. It is a reminder to you that you must adapt the vehicle's road speed to existing road conditions.

On road surfaces that have a loose surface layer on a firm base with good traction (on gravel, deep sand or snow, for example), braking distances may be longer than with locked wheels. This also applies for driving with snow chains. However, ABS continues to provide enhanced vehicle stability and steering response under these conditions.

Information for your safety

Not even ABS can suspend the laws of physics. ABS alone cannot prevent accidents if the brakes are applied without an adequate, safe distance between vehicles or if the speed limit has been exceeded. Nor can it prevent the hazards of aquaplaning. Responsibility for these types of situations remains in the hands (and at the feet) of the driver. You should never allow the added safety of ABS to lull you into a false sense of security, or mislead you into taking increased risks that could affect your own safety and that of others.

Do not make any modifications to the ABS system.
Service procedures on ABS are to be performed by authorized technicians only.◀

Antilock Brake System (ABS)/ Cornering Brake Control (CBC)

CBC is an advanced engineering design of the ABS. When braking while cornering at high speed or braking during high lateral acceleration, or when braking during a lane change, vehicle stability is improved and steering response is enhanced.

In the event of a fault

ABS

The ABS warning lamp comes on, refer to page 21. The brake system then reverts to conventional operation as on vehicles without ABS. However, have the brake system checked by your BMW center as soon as possible. To prevent undetected defects and cumulative faults from adversely affecting the brake system, refer any problems to your BMW center at the earliest opportunity.

BRAKE FLUID

ABS

The red warning lamp for the brake hydraulic system comes on together with the yellow indicator lamps for ABS, ASC+T/DSC and ADB/DBC (refer to page 21), the entire ABS, CBC, ASC+T/DSC and ADB/DBC control system has failed. Continue to drive cautiously and defensively. Avoid full brake applications because the vehicle could become unstable and go out of control. Have the system checked by your BMW center as soon as possible.

Warning lamps for Canadian models.

CarManuals2.com

Dynamic Brake Control (DBC)*

DBC is included in the DSC, refer to information beginning on page 74.

If you step on the brake rapidly, this system automatically produces maximum braking force boost and thus helps to achieve the shortest possible braking distance during "panic stops". All of the benefits of the ABS system are exploited under these circumstances.

Do not reduce the pressure on the brake pedal for the duration of the brake application. When the brake pedal is released, the DBC is deactivated.

In the event of a malfunction, the brake warning lamp lights up yellow. Normal braking efficiency is still fully available. Have the system checked and repaired at your BMW center as soon as possible.

Please observe the section "Information for your safety" concerning the ABS system, which also applies to the DSC system.◀

Disc brakes

Disc brakes furnish optimum deceleration and braking control and greater fade resistance under heavy use.

When the vehicle is driven only occasionally, during extended periods when the vehicle is not used at all, or in operating conditions where brake applications are less frequent, there is an increased tendency for corrosion of the rotors and accumulation of contamination on the brake pads. This occurs because the minimal pressure which must be exerted by the pads to clean the rotors by brake applications is not reached.

If the brake rotors are corroded, they will tend to respond to braking with a pulsating effect which even extended application will fail to cure.

CarManuals2.com

For your own safety: use only brake pads that BMW has approved for your specific vehicle model. BMW cannot evaluate non-approved brake pads to determine if they are suited for use, and therefore cannot ensure the operating safety of the vehicle in the event of their use.◀

Driving notes

While driving in wet conditions and in heavy rain, it is advisable to apply light pressure to the brake pedal every few miles – watch traffic conditions to ensure that this maneuver does not endanger other road users. The heat generated in this process helps dry the pads and rotors.

Maximum braking force is obtained while the wheels continue to rotate, peaking when the wheels remain on the verge of locking without actually doing so. ABS maintains this state automatically. If the ABS fails, you should revert to the staggered braking technique described on page 106.

Extended or steep mountain descents should be driven in the gear in which only minimal periodic brake application is required. This avoids excessive strain on the brakes and possible impairment of the braking effect.

You can increase the engine's braking effect by selecting progressively lower gears, downshifting into first gear, if necessary. You can also downshift into first gear if you are using the manual mode in a vehicle with automatic transmission, refer to page 63.

Disc brakes

Should engine braking prove inadequate, you should still avoid extended, continuous braking. Instead, decelerate the vehicle with increased pressure on the brake pedal (watch for following traffic), release the pedal and then repeat the brake application (staggered braking). This staggered braking technique allows the brakes to cool in the intervals between active braking phases, preventing overheating and ensuring that full braking capacity remains available at all times.

Do not coast with the clutch depressed or with the transmission or selector lever in Neutral. Do not coast with the engine switched off. The engine provides no braking effect when the clutch is depressed and there is no power-assist for braking or steering when the engine is not running.
Never allow floor mats, carpets or any other objects to protrude into the area around the accelerator, clutch and brake pedals and obstruct their movement.◀

CarManuals2.com

Brake system

Brake fluid level

BRAKE FLUID

The warning lamp for the hydraulic brake system comes on:

The brake fluid level is too low in the reservoir (refer to page 126).
If the brake fluid level is too low and brake pedal travel has become noticeably longer, there may be a defect in one of the two brake system's hydraulic circuits.

Proceed to the nearest BMW center. Higher brake application pressure may be necessary under these conditions, and braking distances may be significantly longer. Please remember to adapt your driving style accordingly.◀

Brake pads

The warning lamp for the brake pads comes on:
The brake pads have reached their minimum pad thickness. Proceed to the nearest BMW center as soon as possible to have the pads replaced.

For your own safety: use only brake pads that BMW has approved for your specific vehicle model. BMW cannot evaluate non-approved brake pads to determine if they are suited for use, and therefore cannot ensure the operating safety of the vehicle in the event of their use.◀

The onset of winter is often accompanied by rapid changes in weather. Adaptations in driving style should be accompanied by preparations on the vehicle itself to ensure that your vehicle operation through the winter remains safe and trouble-free.

Coolant

Ensure that the coolant contains the year-round 50:50 ratio of water and antifreeze with corrosion inhibitor. This mixture provides protection against freezing down to approx. –34 °F (–37 °C). Replace the coolant every three years.

Locks

BMW door lock deicer can be used to free the doors if they are frozen. This deicer also contains lubricant.
After using deicer, treatment with BMW lock cylinder grease is recommended.

Rubber seals and components

In order to prevent freezing, apply BMW rubber treatment to weather-stripping on the doors, hood, luggage compartment and to convertible top seals.

A full range of car-care products is available from your BMW center.◀

Snow chains

BMW snow chains* can be mounted on both summer and winter tires. Mount them in pairs on the rear wheels only. Comply with the manufacturer's safety precautions. Do not exceed a speed limit of 30 mph (50 km/h) when driving with chains. As an exception in this situation, we recommend that you switch off the ASC+T/DSC* system when snow chains are mounted. Refer to pages 73, 74.

CarManuals2.com

Starting off

When starting from a full stop or "rocking" free in deep snow, we recommend that you switch off the ASC+T/DSC* system, refer to pages 73, 74.

Driving on low-traction road surfaces

Use smooth, gentle pressure to control the accelerator pedal. Avoid excessive engine speeds and shift to the next higher gear at an early point. Shift down into the next lowest gear when approaching uphill or downhill grades. Maintain an adequate distance between yourself and the vehicle ahead.

Brakes

Winter road conditions substantially reduce the traction available between the tires and the road surface. Remember that – in every situation – braking distances will be significantly longer as a result of this.

ABS is intended to prevent the wheels from locking during brake applications, thus helping to maintain vehicle stability and steering response.

If it should occur that the ABS does not respond in a critical braking situation and the wheels lock: reduce the pressure on the brake pedal until the wheels just start to roll again while still maintaining enough force to continue braking. Following that, increase pedal pressure again. Reduce the pressure as the wheels lock, then reapply pressure. Repeat this process.
This type of staggered braking will shorten the braking distance, and the vehicle still remains responsive to steering.
You can still attempt to steer around hazards once you have reduced the pressure on the brake pedal.

Do not shift down on slick road surfaces. Doing so could cause the rear wheels to lose traction and skid, which could result in the loss of vehicle control.◀

Declutch during hard braking on road surfaces which provide only poor or uneven traction.◀

Skid control

Depress the clutch and release the accelerator pedal, or place the selector lever of the automatic transmission into the "Neutral" position. Countersteer carefully and attempt to regain control of the vehicle.

Parking

Engage 1st or reverse gear. If your vehicle is equipped with an automatic transmission, place the selector lever in "Park". On vehicles with manual transmission, also apply the parking brake when parking on inclined surfaces. In order to prevent the parking brake linings from locking due to frost or corrosion, dry them by gently applying the parking brake as the vehicle is coming to a stop. Make sure that following traffic is not endangered.

The brake lamps do not light up when the parking brake is applied.◀

Power steering

If you notice a change in steering response (high steering effort, for example):
Consult a BMW center to have the system checked.

If the power steering fails, increased effort will be required to steer the vehicle.◀

CarManuals2.com

Cellular phone*

Mobile communications systems (cellular phones, two-way radios, etc.) are approved only up to a power output of 10 watts. Nonetheless, they may cause interference in the operation of your vehicle if they are not specifically designed for use in your vehicle. BMW can neither test nor assume responsibility for every individual product being offered on the market. We recommend that you consult your BMW center before purchasing any device of this kind.

To ensure that your BMW continues to provide reliable and trouble-free operation, refrain from using a cellular phone or other radio device with an antenna located inside the passenger compartment. The antenna should always be fitted on the outside of the vehicle.

▷ Before loading the vehicle on a car-carrier train or driving it through a car wash, remove the antenna.◀

Car radio reception

The reception and sound quality obtained from mobile radios varies according to a variety of factors, including the broadcast range of the transmitter and the directional orientation of the antenna. Interference factors such as high-tension power lines, buildings and natural obstructions can all lead to unavoidable reception interference, regardless of how well the vehicle's sound system is operating. Climatic factors such as intense solar radiation, fog, rain and snow can also interfere with reception.

Cellular phones without official BMW approval can also generate interference during use. This phenomenon assumes the form of a low-pitched hum emanating from the speaker system.

Please refer to the Owner's Manual provided with your sound system for detailed information on its use.

CarManuals2.com

▷ Whenever necessary (when entering a car wash, for instance), remove the rod antenna*. To remove the antenna, grasp the rod at the bottom and unscrew it to the left from the antenna base.◀

You will find additional information concerning car radio reception in the chapter "Advanced technology" on page 166.

The fabric top does not have to be removed even in winter, when the hardtop is normally in constant use. In order to prevent water spots and mildew stains, the fabric top must be completely dry before it is stored in the convertible top compartment.

Two people are necessary for the installation and removal of the hardtop. Work with extreme caution during this operation to avoid paint damage and damage to the body and hardtop.

You may purchase a hardtop lift* from your BMW center. This accessory is especially designed to facilitate installation and removal of the hardtop.

Installation

Hook the protective fabric on the convertible top linkage (arrow).

Open the convertible top and fold it down in the convertible top compartment, refer to pages 40 and 44. When doing this, make sure the rear window is laid down evenly and free of creases. To prevent the rear window from being scratched, position the protective fabric in the window fold.

Do not install the convertible top cover.

Lower the side windows and remove the rod antenna if necessary to avoid damage.

Rotate the cover panel which is located in the right and left trim panels behind the seats in the direction of the arrow until the opening for the hardtop mount is completely free.

Remove the hardtop from the protective cover. Clean any dirt and dust from the contact surfaces between the hardtop and the vehicle body in order to protect against abrasion.

Position the hardtop on the mounts with the assistance of a second person.

CarManuals2.com

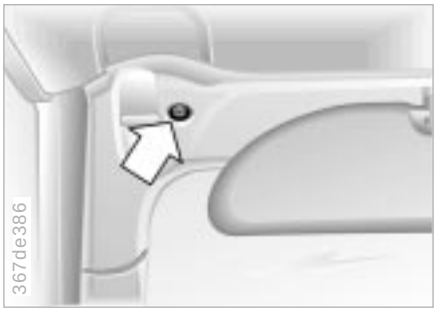

Using the wrench from the onboard tool kit (fastened to the jack with a Velcro® strip), turn the screw (arrow) two to three turns into the windshield frame on the right and left sides.

Turn the right and left locking levers of the rear hardtop mounting fasteners in the direction of the arrow to the stop.

▷ The rear mounting fasteners are locked correctly when the locking levers engage audibly and point to the rear of the vehicle.◀

CarManuals2.com

Finally, tighten the screws in the windshield frame (refer to the left column) and secure the wrench in the onboard tool kit.

▷ After you have driven approx. 30 to 60 miles (50 to 100 km), check the front hardtop fasteners to be sure that they are seated securely.◀

Removal

Reverse the above procedure for removal of the hardtop.

▷ The two screws of the front hardtop fasteners remain permanently in the windshield frame of your vehicle to prevent their loss.◀

Following the initial delivery of the vehicle, or after the hardtop has been in use for an extended period, closing the convertible top requires increased effort. You may find this operation easier with the assistance of a second person. Following that, the convertible top should remain closed for at least 12 hours.

Notes on inflation pressures

Information for your safety

The factory-approved radial tires are matched to the vehicle and have been selected to provide optimum safety and driving comfort on your vehicle.

In a very real sense, both tire life and your own safety are riding on correct tire specifications and inflation pressures, refer to page 26.

Incorrect tire inflation pressure is a frequent cause of tire damage. It also significantly influences the road-holding ability of your BMW. Be sure to check the tire inflation pressures, including the spare tire, on a regular basis, at least twice a month and before doing any extended driving, refer to page 26. If this is not done, incorrect tire pressures can cause driving instability and tire damage, ultimately resulting in accidents.◀

CarManuals2.com

Check the inflation pressure of the spare tire

For checking tire pressures, there is a valve extension (arrow) on the storage tray of the spare wheel which is accessible from outside.

Tire condition

Tire tread – tire damage

Inspect your tires frequently for tread wear, signs of damage and for foreign objects lodged in the tread. Check the tread pattern depth.

Tread depth should not be allowed to go below 0.12 in (3 mm), even though the legally specified minimum tread depth is 0.063 in (1.6 mm). Tread wear indicators (arrow) are embedded in the base of the tire's tread. Their locations are indicated by the legend TWI – Tread Wear Indicator – at various points on the tire's shoulder. When the tread reaches a depth of 0.063 in (1.6 mm), these indicators appear to signal that the tires have worn to the minimum legal level. Below 0.12 in (3 mm) tread depth, there is an increased risk of aquaplaning, even at relatively

moderate speeds and with only small amounts of water on the road.

Never continue driving on a deflated (flat) tire. A flat tire greatly impairs steering and braking response, and can lead to complete loss of control over the vehicle.
Avoid overloading the vehicle so that the permitted load on the tires is not exceeded. Overloading causes overheating and damage inside the tires. The ultimate result can assume the form of a sudden air loss.
Unusual vibrations encountered during normal vehicle operation can indicate a flat tire or some other vehicle malfunction. The type of problem can be caused by contact with curbs, etc. This is also true for irregularities in the vehicle's handling characteristics, such as a pronounced tendency to pull to the left or right. Should this occur, respond by immediately reducing your speed.

Proceed carefully to the nearest BMW center or professional tire center, or have the vehicle towed in to have it, its wheels and tires inspected.
Tire damage (up to and including sudden and complete air loss) can pose an extreme hazard for both vehicle occupants and other road users.◀

CarManuals2.com

To maintain good handling and vehicle response, use only tires of a single tread configuration from a single manufacturer. BMW tests and approves wheel and tire combinations, refer to page 116.

DOT Quality Grades

Tread wear
Traction AA A B C
Temperature A B C

All passenger vehicle tires must conform to Federal Safety Requirements in addition to these grades.◀

Tread wear

The tread wear grade is a comparative rating based on the wear rate of the tire when tested under controlled conditions on a specified government test course.
For example, a tire graded 150 would wear one and one-half (1½) times as well on the government course as a tire graded 100. The relative performance of tires depends upon the actual conditions of their use, however, and may depart significantly from the norm due to variations in driving habits, service practices and differences in road characteristics and climate.

Traction

The traction grades, from highest to lowest, are AA, A, B and C.
Those grades represent the tire's ability to stop on wet pavement as measured under controlled conditions on specified government test surfaces of asphalt and concrete. A tire marked C may have poor traction performance.

The traction grade assigned to this tire is based on straight-ahead braking traction tests, and does not include acceleration, cornering, hydroplaning, or peak traction characteristics.◀

Temperature

The temperature grades are A (the highest), B and C, representing the tire's resistance to the generation of heat and its ability to dissipate heat when tested under controlled conditions on a specified indoor laboratory test wheel.
Sustained high temperature can cause the material of the tire to degenerate and reduce tire life, and excessive temperature can lead to sudden tire failure. The grade C corresponds to a level of performance which all passenger vehicle tires must meet under the Federal Motor Vehicle Safety Standard No. 109. Grades B and A represent higher levels of performance on the laboratory test wheel than the minimum required by law.

CarManuals2.com

The temperature grade for this tire is established for a tire that is properly inflated and not overloaded. Excessive speed, under-inflation, or excessive loading, either separately or in combination, can cause heat buildup and possible tire failure.◀

Uniform Tire Quality Grading

Quality grades can be found where applicable on the tire sidewall between tread shoulder and maximum section width. For example:

Tread wear 200
Traction AA
Temperature A

Do not use retreaded tires as this could negatively affect driving safety. This is due to the possible variations in casing structures and, in some cases, to their extreme age, factors which can lead to a decrease in their durability.◀

Tire age

The date on which the tire was manufactured is indicated by the code on the sidewall:
DOT ... 2501 indicates that the tire was manufactured in week 25 of 2001.

BMW recommends the replacement of all tires when the tires are no more than 6 years old, even if a tire usage of 10 years is possible.

Spare tires over 6 years old should be used only in case of emergency. A tire of this age should be replaced by a new tire immediately, and should not be fitted together with new tires.

Between the axles

Tread wear at the front and rear axle is different and will vary according to individual driving conditions. In the interest of safety and optimal vehicle response, we advise against rotating tires from front to rear and vice versa.

If rotating the tires between the axles is under consideration for economic reasons, the costs for remounting the wheels must be calculated against any savings which might result from the anticipated extension in tire life. Rotation should always be carried out at short intervals, with a maximum of 3,000 miles (5,000 km). Consult your BMW center for more information.

Should you decide to rotate the tires, it is essential to comply with the following:
Rotate wheels on the same side of the vehicle only, otherwise braking efficiency and road grip could be adversely affected.

Following rotation, correct the tire inflation pressure.

If tires with different sizes are mounted on the front and rear axles (refer to the information beginning on page 116), the wheels may not be rotated from one axle to the other.◀

CarManuals2.com

Wheel and tire combinations

The right choice

Use only wheels and tires approved by BMW for the corresponding vehicle model, as otherwise the tires may make contact with the body as the result of tolerances despite the same nominal size being used, resulting in serious accidents. If non-approved wheels and tires are used, BMW cannot evaluate their suitability, and therefore cannot be held liable for driving safety.◀

For wheel and tire specifications approved by BMW, refer to the information beginning on page 116.

The correct wheel and tire combination affects different systems such as ABS and ASC+T/DSC*. The function of these systems is impaired if improper wheel and tire combinations are used.
For this reason, use only tires of the same manufacture and tread configuration. In the event of a flat tire, for example, remount the approved wheel and tire combination as soon as possible.◀

Codes on tires and wheels

CarManuals2.com

The code on the tires has the following meaning.

Codes on radial tires:

Example: 205/60 R 15 91 H

- Nominal width in mm — 205
- Aspect ratio in % — 60
- Belt rating ID code for radial tires — R
- Wheel diameter in inches — 15
- Load rating (not on ZR tires) — 91
- Speed rating (before R on ZR tires) — H

The speed rating indicates the approved maximum speed for the tire.

Summer tires:

S	=	up to 112 mph (180 km/h)
T	=	up to 118 mph (190 km/h)
H	=	up to 130 mph (210 km/h)
V	=	up to 149 mph (240 km/h)
W	=	up to 167 mph (270 km/h)
Y	=	up to 186 mph (300 km/h)
ZR	=	over 149 mph (240 km/h)

All season and winter tires:

Q	M+S	=	up to 100 mph (160 km/h)
T	M+S	=	up to 118 mph (190 km/h)
H	M+S	=	up to 130 mph (210 km/h)

Codes on light-alloy wheels:

Example: 7 J x 15 H 2

- Rim width in inches — 7
- Code letter for flange type — J
- Symbol for full-drop center rim — x
- Rim diameter in inches — 15
- Hump on the 2 rim shoulders — H 2

Protect valve inserts against dirt by using screw-on valve caps. Dirt in the valve inserts frequently causes a slow loss in tire pressure.

Storage

Store tires in a cool, dry place, protecting them against light whenever possible. Protect the tires against contact with oil, grease and fuel.

Special features of winter tires

Choosing the right tire

BMW recommends winter tires (M+S radial tires) for operation under inclement winter driving conditions. While so-called all season tires (M+S designation) provide better winter traction than summer tires with the load ratings H, V, W, Y and ZR, they generally do not achieve the performance of winter tires.

In the interests of sure tracking and safe steering response, mount winter tires which are made by the same manufacturer and which have the same tread configuration at all four wheels.

Comply with recommended speed

Never exceed the maximum speed for which the winter tires are rated.
Unprofessional attempts by laymen to service tires can lead to damage and accidents.
Have this work performed by skilled professionals only. Any BMW center has the required technical knowledge and the proper equipment and will be happy to assist you.◀

Tire condition, tire pressure

CarManuals2.com

Once the tire wears to below 0.16 in (4 mm), winter tires display a perceptible decrease in their ability to cope with winter driving conditions, and should be replaced in the interest of safety.

Comply with the specified tire inflation pressures – and be sure to have the wheel and tire assemblies balanced every time you change the tires.

Snow chains*

BMW narrow-link snow chains are intended for mounting in pairs at the rear wheels only. Comply with all manufacturer's safety precautions when mounting the chains. Do not exceed a speed of 30 mph (50 km/h) while driving with mounted snow chains.

Approved wheel and tire specifications

BMW tests certain tire brands for each tire size, classifies them as road-safe and approves them. Consult your BMW center for more information.
CarManuals2.com
Observe any regulations applicable in the country of use, e.g. requiring entry in the vehicle documents.

Tire specifications	Suitable for snow chains	Steel wheel (rim)	Light-alloy wheel
Z3 roadster 2.5i			
Summer			
225/50 R 16 92 V 225/50 ZR 16	*	–	7Jx16
Front: 225/45 ZR 17 Rear: 245/40 ZR 17	– –	– –	7.5Jx17 8.5Jx17
Winter (M+S)			
205/60 R 15 91 Q/T/H	*	6.5Jx15	7Jx15
205/55 R 16 91 Q/T/H 225/50 R 16 92 Q/T/H	*	7Jx16	7Jx16
225/45 R 17 91 Q/T/H	*	– –	7.5Jx17 8Jx17
Spare tire			
T 115/90 R 16 92 M	–	3.00Bx16	–

Use the spare wheel only for short distances (to reach the nearest BMW center, for instance). Due to the altered handling characteristics, do not exceed a maximum speed of 50 mph (80 km/h). Mounting snow chains on the spare tire is not possible. Be sure that all tires are properly inflated, refer to page 27.

The use of rims and lug bolts that do not meet the specifications of the original factory-installed equipment will affect the safe operation of your vehicle and may cause an accident and personal injury.
Never mix tires of different design, such as steel-belted radials with bias-belted or bias-ply tires etc. Mixing tire types will adversely affect road-holding and can lead to loss of vehicle control.◀

Approved wheel and tire specifications

BMW tests certain tire brands for each tire size, classifies them as road-safe and approves them. Consult your BMW center for more information.
Observe any regulations applicable in the country of use, e.g. requiring entry in the vehicle documents.

Z3 roadster 3.0i, Z3 coupe 3.0i			
Summer			
225/50 R 16 92 V 225/50 ZR 16	*	–	7Jx16
Front: 225/45 ZR 17	–	–	7.5Jx17
Rear: 245/40 ZR 17	–	–	8.5Jx17
Winter (M+S)			
205/55 R 16 91 Q/T/H 225/50 R 16 92 Q/T/H	*	7Jx16	7Jx16
225/45 R 17 91 Q	*	– –	7.5Jx17 8Jx17
Spare tire			
T 115/90 R 16 92 M	–	3.00Bx16	–

Use the spare tire only for short distances (to reach the nearest BMW center, for instance). Due to the altered handling characteristics, do not exceed a maximum speed of 50 mph (80 km/h). Mounting snow chains on the spare tire is not possible. Be sure that all tires are properly inflated, refer to page 27.

The use of rims and lug bolts that do not meet the specifications of the original factory-installed equipment will affect the safe operation of your vehicle and may cause an accident and personal injury.
Never mix tires of different design, such as steel-belted radials with bias-belted or bias-ply tires etc. Mixing tire types will adversely affect road-holding and can lead to loss of vehicle control.◀

CarManuals2.com

Do not work on your vehicle without appropriate skills. Always switch off the engine and allow it to cool down before working in the engine compartment. Always disconnect the battery before working on any electrical systems or equipment, especially when these are located within the engine compartment. Comply with all applicable instructions and warnings. If you are not familiar with all guidelines, have the work performed by your BMW center. Otherwise, safety hazards for vehicle occupants and other road users may occur as a result of improper handling of components and materials.◀

To release

Pull the lever located under the left-hand side of the instrument panel.

CarManuals2.com

To open

Grasp the hood on both sides on the level of the latch (arrow 1); press the latch upward and simultaneously lift the hood with both hands.

To close

Allow the hood to fall from a height of about 12 in (30 cm) so that it audibly engages.

To avoid injuries, be sure that the travel path of the hood is clear when it is closed, as with all closing procedures.
If it is determined that the hood is not completely closed while driving, stop immediately and close it securely.◀

CarManuals2.com

Engine compartment – Z3 roadster 2.5i, 3.0i, Z3 coupe 3.0i

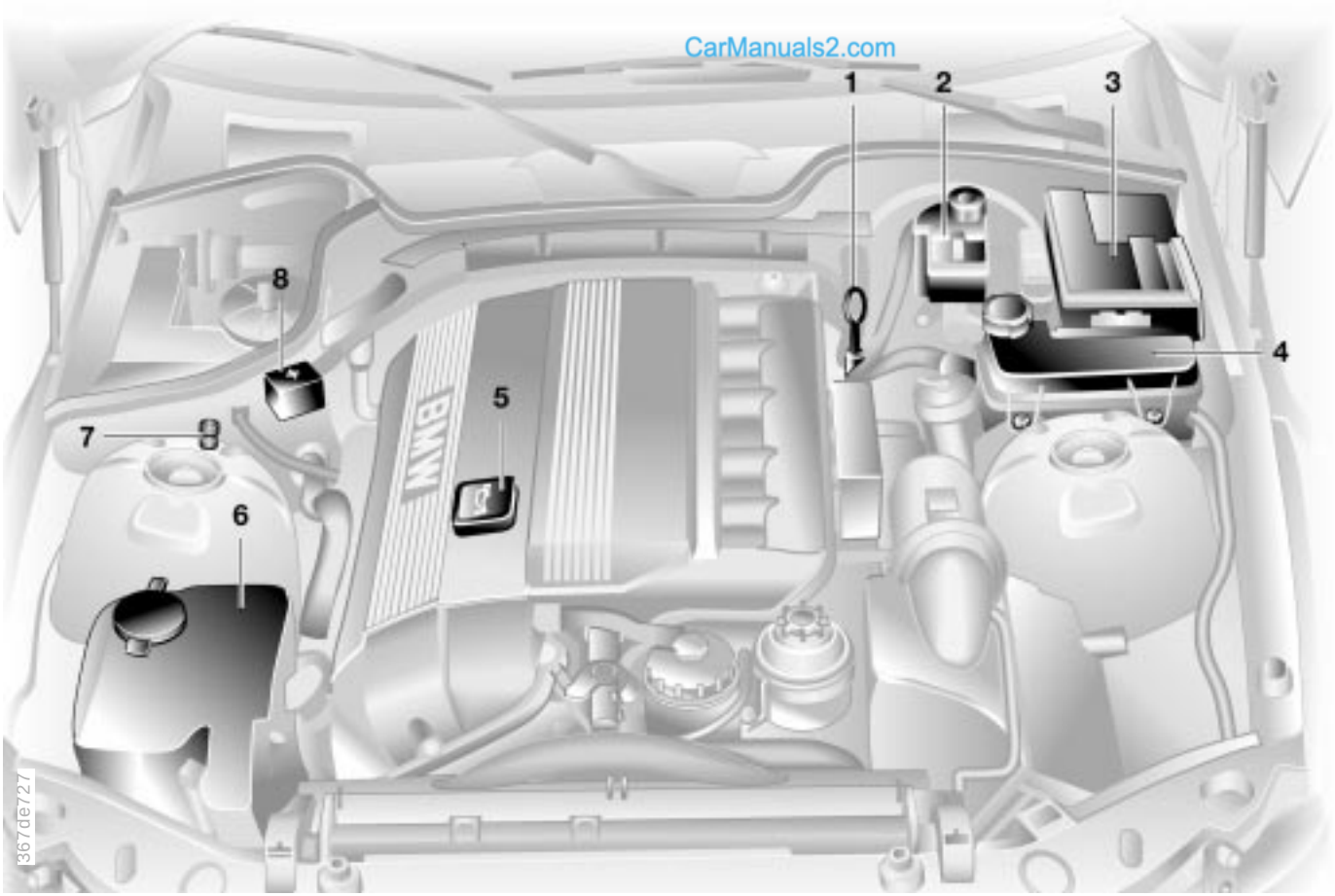

Online Edition for Part No. 01 41 0 156 441 - © 10/01 BMW AG

Engine compartment – Z3 roadster 2.5i, 3.0i, Z3 coupe 3.0i

1 Engine oil dipstick 123

2 Brake fluid reservoir,
the illustration shows the reservoir for
Z3 roadster 3.0i, Z3 coupe 3.0i 126

3 Fuse box 156

4 Coolant expansion tank 125

5 Engine oil filler neck 123

6 Reservoir for windshield and
headlamp* washer fluid 122

7 Auxiliary terminal for jump-starting –
negative terminal 158

8 Auxiliary terminal for jump-starting –
positive terminal 158

CarManuals2.com

Fluids for the washer systems

Headlamp* and windshield washer system

Capacity: approx. 5.3 US quarts (5.0 liters).

Fill with water and – if required – with an antifreeze agent (according to the manufacturer's recommendations).

We recommend that you mix the washer fluid before adding it to the reservoir.◀

Antifreeze agent for the washer systems is flammable. For this reason, keep it away from sources of flame and store it only in its original container. Store it so that it is inaccessible to children. Comply with the instructions on the containers.◀

Washer nozzles

Windshield washer system

Windshield:
The spray from the nozzles should be directed so as to ensure effective cleaning, even at high speeds.
If necessary, correct the adjustment with a needle, or have the adjustment made by your BMW center.

Rear window – Z3 coupe only:
Have this system adjusted by your BMW center as required.

Headlamp washer system*

Have this system adjusted by your BMW center as required.

CarManuals2.com

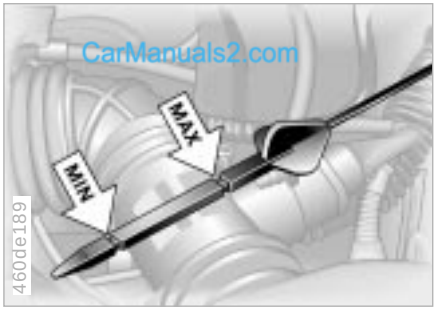

To check oil level

1. Park the vehicle on a level surface
2. Switch the engine off after it has reached normal operating temperature
3. After approx. 5 minutes, pull the dipstick out and wipe it off with a clean lint-free cloth, paper towel, or similar material
4. Push the dipstick carefully all the way into the guide tube and pull it out again
5. The oil level should be between the two marks on the dipstick.

As with fuel economy, oil consumption is directly influenced by your driving style and vehicle operating conditions.

The space between the two marks on the dipstick corresponds to approx. 1.1 US quarts (1 liter). Do not fill beyond the upper mark on the dipstick. Excess oil will damage the engine.

To add oil

While you should wait until the level has dropped to just above the lower mark before adding oil, you should never allow the oil level to fall below this mark.

⚠ BMW engines are designed to operate without oil additives; the use of additives could lead to damage in some cases. This also applies to the manual and automatic transmission, the differential and the power steering system.◀

Specified engine oils

The quality of the engine oil which is selected has critical significance for the operation and service life of an engine. Based on extensive testing, BMW has approved only certain engine oils.

Use only approved "BMW High Performance Synthetic Oil".

If you are unable to obtain "BMW High Performance Synthetic Oil", you can add small amounts of synthetic oil in between oil changes. Only use oils with the API SH specification or higher.

▷ Ask your BMW center for details concerning the specific "BMW High Performance Synthetic Oil" or "synthetic oils" which have been approved.◀

You can also call BMW of North America at 1-800-831-1117 or visit this website: www.bmwusa.com to obtain this information.

Viscosity – ratings

Viscosity is the oilflow rating as established in SAE classes.

The selection of the correct SAE class depends on the climatic conditions in the area where you drive your BMW.

▷ Approved oils are in SAE classes 5W-40 and 5W-30.◀

These oils may be utilized in all ambient temperatures.

CarManuals2.com

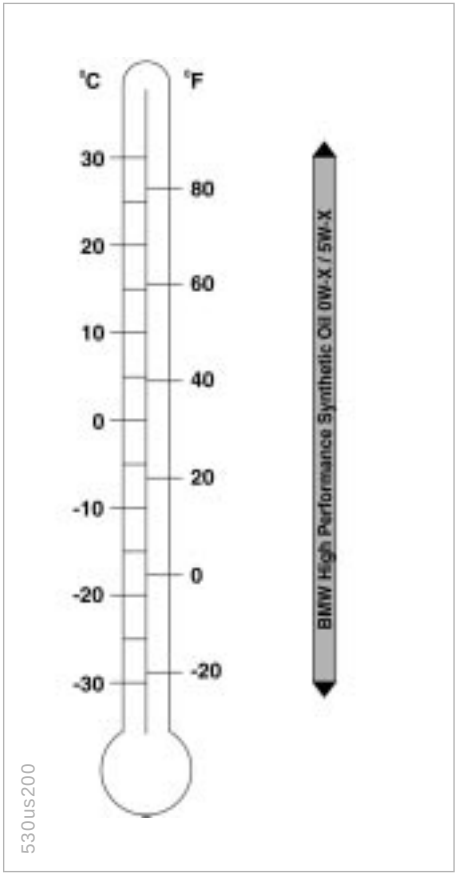

Engine oil

Comply with the applicable environmental laws regulating the disposal of used oil.◀

Recommendation: have the oil changed by your BMW center only.

Continuous exposure to used oil has caused cancer in laboratory testing. Any skin areas that come in contact with oil should thus be thoroughly washed with soap and water. Store oil, grease, etc., out of reach of children. Comply with warning labels and information on containers.
If you use SAE 15W-40 engine oil in low temperatures (below +14 °F/–10 °C), the engine may become difficult to start.
Special engine oils individually approved by BMW are preferred for use in your engine. Please contact your BMW center for details.◀

Coolant

Do not add coolant to the cooling system when the engine is hot. If you do, escaping coolant can cause burns.
To avoid the possibility of damage later on, do not use anything other than factory-approved, nitrite and amino-free extended-duty antifreeze with corrosion inhibitor which can be used with aluminum radiator cores. Your BMW center is familiar with the approved specifications.
Antifreeze and anti-corrosion agents are hazardous to health. Store them in their original containers. Keep the containers tightly closed and out of reach of children.
CarManuals2.com
Extended-duty antifreeze with corrosion inhibitor contains the flammable substance ethylene glycol. For this reason, do not spill extended-duty antifreeze with corrosion inhibitor on hot engine components. If you do, it could be ignited and cause burns.◀

Comply with the applicable environmental laws regulating the disposal of extended-duty antifreeze with corrosion inhibitor.◀

Checking coolant level

Correct coolant level when the engine is cold (approx. +68 °F/+20 °C):

Unscrew the cap from the expansion tank.

The coolant level is correct when the upper end of the red float is at least even with the upper edge of the filler neck (refer to the arrow in the illustration), but no more than 0.8 in (2 cm) above it – that is, up to the second mark on the float (refer also to the schematic diagram next to the filler neck).

Coolant

To add coolant

Wait until the engine cools before removing the cap from the expansion tank. The needle of the coolant gauge in the instrument cluster must be located in the blue field; otherwise, there is a danger of scalding.

1. Turn the cap slightly counterclockwise in order to allow accumulated pressure to escape, then open
2. If the coolant is low, slowly add coolant until the correct level is reached – do not overfill.

The coolant is a mixture of water and extended-duty antifreeze with corrosion inhibitor. Always maintain the prescribed all-season 50:50 mixture ratio for year-round protection against internal corrosion. No other additives are required.

Replace the coolant regularly. Refer to the Service and Warranty Information Booklet (US models) or the Warranty and Service Guide Booklet (Canadian models).

Brake fluid

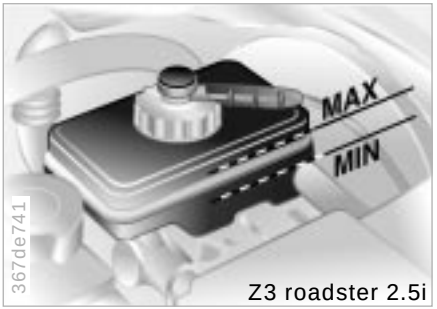

Z3 roadster 2.5i

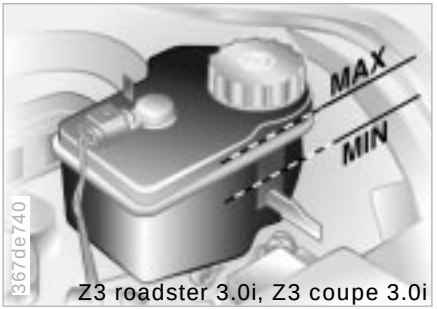

Z3 roadster 3.0i, Z3 coupe 3.0i

If the warning lamp for the brake hydraulic system comes on:
The brake fluid level is too low, refer also to the instructions on page 104.
For adding brake fluid or for determining and correcting the cause of brake fluid loss, consult your BMW center. Your BMW center is familiar with the specifications for factory-approved brake fluids (DOT 4).

CarManuals2.com

Brake fluid loss may result in extended brake pedal travel. If this occurs, refer to the notes on page 104.

Brake fluid is hygroscopic, that is, it absorbs moisture from the air over time.
In order to ensure the operating safety and reliability of the brake system, have the brake fluid changed every two years by a BMW center, refer also to the Service and Warranty Information Booklet (US models) or the Warranty and Service Guide Booklet (Canadian models).

Brake fluid

Brake fluid is hazardous to health and will damage the vehicle's paint. You should always store it in its original container and in a location which is inaccessible to children. Avoid brake fluid spills. Do not fill brake fluid beyond the "MAX" level in the reservoir. The brake fluid could ignite upon contact with hot engine parts and cause serious burns.◀

Comply with the applicable environmental laws regulating the disposal of brake fluid.◀

Vehicle Identification

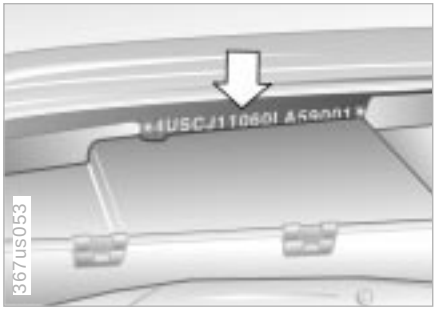

The Vehicle Identification Number is located in the engine compartment below the windshield and on the top of the instrument panel.

CarManuals2.com

The BMW Maintenance System

The BMW Maintenance System has been designed as a reliable means of providing maximum driving and operating safety – and as cost-effectively as possible for you.

Please keep in mind that regular maintenance is not only necessary for the safety of your vehicle, but also plays a significant role in maintaining the resale value of your vehicle.

Service Interval Display

Advanced technology is employed to calculate the optimal maintenance intervals, which are then indicated in the Service Interval Display. While conventional systems rely solely on distance traveled to determine when service is due, the BMW Maintenance System considers the actual conditions under which the vehicle operates.

From the point of view of maintenance, 62,000 miles (100,000 km) accumulated in short-distance urban driving are not the equivalent of the same distance covered at moderate speeds in long-distance highway travel. In response to this fact, the BMW Maintenance System monitors operating conditions as the basis for determining the optimum service intervals for your individual vehicle.

The BMW Maintenance System includes the Engine Oil Service as well as Inspections I and II.

Determining the maintenance intervals according to the actual loads on the vehicle covers every kind of operating situation. However, since oil deteriorates over time regardless of use, even those who drive only short distances – significantly less than 6,200 miles (10,000 km) annually – should have the engine oil changed regularly. Refer to the Service and Warranty Information Booklet (US models) or to the Warranty and Service Guide Booklet (Canadian models).

CarManuals2.com

Service and Warranty Information Booklet (US models)/Warranty and Service Guide Booklet (Canadian models)

For detailed information on required maintenance items and the work involved, please refer to the Service and Warranty Information Booklet (US models) or to the Warranty and Service Guide Booklet (Canadian models).

Depending upon operating conditions, it may be advisable to have the body checked for damage from rocks or gravel as a precaution against rust.

CarManuals2.com

▷ Have your BMW center perform the maintenance and repair.

Your BMW center is always informed on the latest maintenance work and repair techniques and is equipped with the required special tools. In addition, checking parts known from experience to be subject to wear is a permanent part of the maintenance specifications. Be sure that all maintenance work is confirmed in the Service and Warranty Information Booklet (US models) or the Warranty and Service Guide Booklet (Canadian models). These entries will constitute your proof that the vehicle has received regular maintenance. They are also required for warranty claims.◀

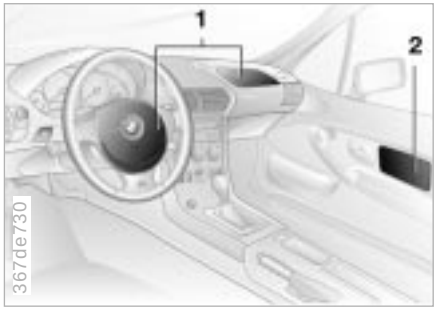

1 Front airbags on the driver and passenger side
2 Side airbags on the driver and passenger side

Important safety notices

Do not attempt to remove the gas generators of the airbag restraint system from the vehicle or to disassemble them.
Have inspection and service procedures performed by specially-trained personnel only.
If the airbag restraint system malfunctions, is deactivated or triggered as a response to an accident, have the system repaired by a BMW center only.

Do not make modifications of any kind to the individual components or system wiring. These include the upholstered covers on the steering wheel hub, in the instrument panel and in the side trim panels of the doors. Never apply adhesive materials to these components or cover or modify them in any way. Do not attempt to disassemble the steering wheel itself.
To ensure compliance with applicable safety regulations, have the airbag generators disposed of by a BMW center only.
Unprofessional attempts to service the system could lead to failure in an emergency or undesired airbag activation, either of which could result in personal injury.◀

CarManuals2.com

Storing your vehicle

If you intend to store the vehicle for longer than three months, have the maintenance operations described on this page performed.◀

Preparation for storage

Have the following operations performed by your BMW center:

1. Clean and apply a rust-proofing agent or other treatment to the engine, engine compartment, undercarriage, axles and major components in accordance with approved repair procedures. Wash the vehicle, clean the interior and treat painted and chromed parts. Clean the rubber seals around the hood, luggage compartment and doors
2. Change the engine oil and oil filter with the engine at operating temperature. As an additional corrosion protection measure, an anticorrosive agent can be added to the engine in accordance with the manufacturer's instructions
3. Check the coolant level and concentration and top up if necessary
4. Check the fluid level of the windshield washer fluid reservoir; top up if necessary

5. Fill the fuel tank completely to prevent the formation of condensation
6. Increase the tire inflation pressure to 51 psi (350 kPa).

Before parking the vehicle for storage

1. Dry the parking brake and footbrake by brake applications to prevent the brake rotors and drums from corroding
2. Park the vehicle in a covered, dry, and well-ventilated room. Place the transmission in 1st gear or set the selector lever to the "P" position. Chock the wheels to prevent the vehicle from rolling if necessary. Do not set the parking brake
3. Remove the battery, charge it completely and store it in a cool (but frost-free) room

Z3 roadster:

4. Remove the hardtop* and store it separately, refer to page 109
5. Close the convertible top.

During storage

Recharge the battery every six months. If it is not recharged, it will not be serviceable. Every time the battery is discharged, especially over extended periods, its service life is reduced.

Removing the vehicle from storage

Recharge the battery if the "Magic Eye" turns black, refer to page 154.

Then have Inspection I performed by your BMW center, including a brake fluid replacement if necessary, refer to the Service Manual.

CarManuals2.com

Technical modifications

Any BMW center will be happy to advise you concerning the advisability, legal implications and factory recommendations for technical modifications to the vehicle. For this purpose, the BMW center will require the Vehicle Identification Number. The engine number is also required in some instances.

Light-emitting diodes (LEDs)

Light-emitting diodes installed behind translucent lenses serve as the light source for many of the controls and displays in your vehicle. These LEDs are similar to conventional laser technology.

Do not remove the protective lens and avoid staring directly at the unfiltered beam for extended periods (several hours), since inflammation of the iris could result.◀

California Proposition 65 Warning

California laws require us to state the following warning:

Engine exhaust, some of its constituents, and certain vehicle components contain or emit chemicals known to the State of California to cause cancer and birth defects or other reproductive harm.◀

CarManuals2.com

OBD interface socket

Access to the interface socket for the Onboard Diagnostic system (OBD): Lift off the side cover in the center console on the passenger's side (arrow).

The purpose of the OBD system is to ensure proper operation of the emission control system throughout the vehicle's lifetime by monitoring emission-related components and systems for deterioration and malfunction.

An illuminated indicator informs you of the need for service, but not of the need to stop the vehicle. However, the systems should be checked by your BMW center at the earliest possible opportunity.

Under certain conditions, the indicator will blink or flash. This indicates a rather severe level of engine misfire. When this occurs, you should reduce speed and consult the nearest BMW center as soon as possible. Severe engine misfire over only a short period of time can seriously damage emission control components, especially the catalytic converter.

"Service Engine Soon" warning lamp for Canadian models.

When the filler cap is not properly tightened, the OBD system can detect the vapor leak and the indicator will light up. If the filler cap is subsequently tightened, the indicator should go out within a few days.◀

CarManuals2.com

CarManuals2.com

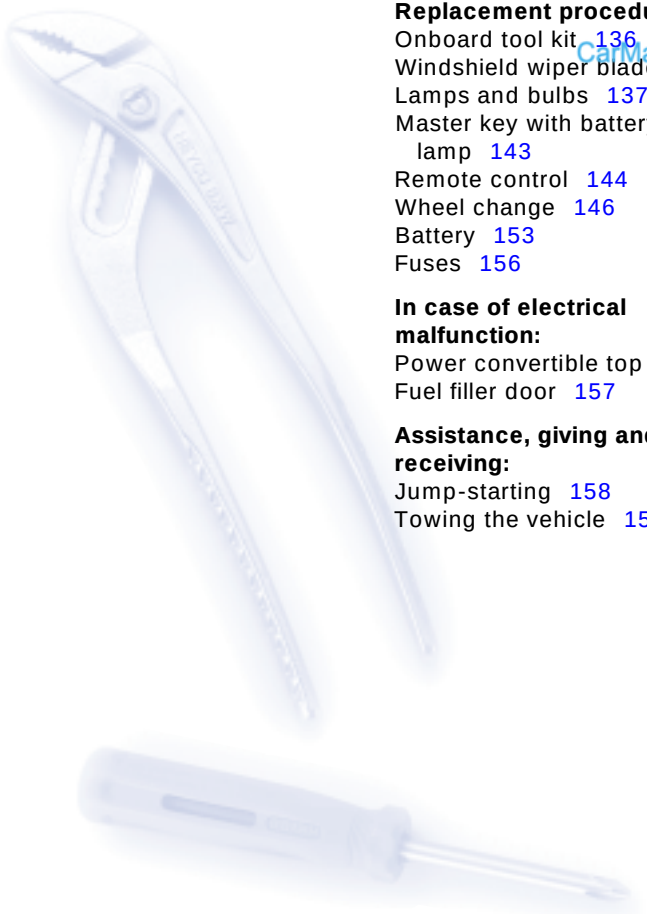

Replacement procedures:
Onboard tool kit 136
Windshield wiper blades 136
Lamps and bulbs 137
Master key with battery lamp 143
Remote control 144
Wheel change 146
Battery 153
Fuses 156

In case of electrical malfunction:
Power convertible top 157
Fuel filler door 157

Assistance, giving and receiving:
Jump-starting 158
Towing the vehicle 159

CarManuals2.com

Onboard tool kit

The onboard tool kit is located in the luggage compartment, under the floor mat.

Z3 coupe:
Grasp the floor mat by the straps on the left and right. Pull it upward and remove it.

Z3 roadster:
Lift the floor mat from the rear by the strap and fold it forward.

Windshield wiper blades

Front

1. Position the wipers vertically. To do this, switch on the wipers and switch off the ignition when the wipers are approximately vertical
2. Raise the wiper arm completely
3. Press the spring retainer (arrow) and extract the blade, pulling toward the wiper arm
4. Insert a new wiper blade and apply pressure until you hear it engage.

Rear window wiper – Z3 coupe

Follow the same procedure as described for changing the front wiper blades, except that the wiper does not have to be positioned vertically.

Fold the wipers back onto the window before you turn the ignition key to position 1 or 2.◀

Use only wiper blades which have been approved by BMW.◀

CarManuals2.com

Lamps and bulbs

The lamps and bulbs make essential contributions to the safety of your vehicle. Therefore, comply fully with the following instructions during bulb replacement. If you are not familiar with any of the procedures, consult your BMW center.

Do not touch the glass portion of a new bulb with your bare hands since even small amounts of impurities burn in to the surface and reduce the service life of the bulb. Use a clean cloth, paper napkin, or a similar material, or hold the bulb by its metallic base.◀

A replacement bulb set is available from your BMW center.

Before working on the electrical system, switch off the electrical accessory you are working on or disconnect the cable from the negative terminal of the battery. Failure to observe this precaution could result in short circuits.
To prevent injuries and damage, comply with any instructions provided by the bulb manufacturer.◀

The illustration depicts the right side of the engine compartment.

1 High beams

HB3 bulb, 65 watts

CarManuals2.com

2 Low beams

HB4 bulb, 55 watts

The bulb is pressurized. Therefore, wear safety glasses and protective gloves. Failure to comply with these precautions could result in physical injury if the bulb breaks.◀

1. Turn the bulb holder with the bulb to the left and remove toward the rear
2. Pull off the plug
3. Push the new bulb holder with the bulb into the plug – ensure proper locking
4. Reinstall in reverse order.

When cleaning the headlamps, please observe the following:

- ▷ Do not wipe dry (this causes scratches) and never use abrasives or strong solvents to clean the covers
- ▷ Remove dirt and contamination (such as insects) by soaking with BMW Car Shampoo and then rinsing with plenty of water
- ▷ Always use a deicer spray to remove accumulated ice and snow – never use a scraper.◀

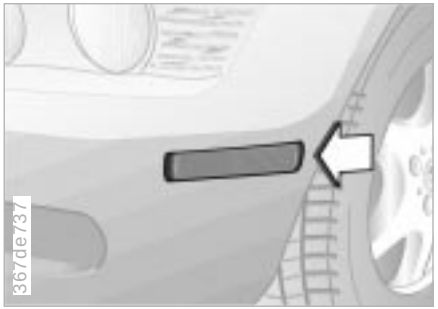

CarManuals2.com

Position lamps

5 watt bulb

1. Using your fingertip, press forward on the rear edge of the lamp (arrow) and remove
2. Turn the bulb holder with the bulb to the right and remove it from the lamp
3. Pull the bulb out of the socket and replace
4. Install in the reverse order.

Front turn signals

21 watt bulb

1. Turn the bulb holder with the bulb to the left and remove toward the rear
2. Applying light pressure, turn the bulb to the left. Remove and exchange the bulb
3. Insert the bulb holder and turn to the right as far as possible.

Side turn signals

5 watt bulb

1. Use finger pressure against the front edge of the lamp (arrow) to press it toward the rear for removal
2. Turn the bulb holder with the bulb to the right and remove it from the lamp
3. Pull the bulb out of the socket and replace
4. Install in the reverse order.

Front fog lamps*

H1 bulb, 55 watts

1. Unclip the plastic cover (on the inside of the lamp) with a screwdriver
2. Loosen two screws, tilt the fog lamp outward and remove it
3. Release the plastic cap on the back of the fog lamp and remove it
4. Remove the plug
5. Detach the wire clamp
6. Replace the bulb
7. Install in the reverse order.

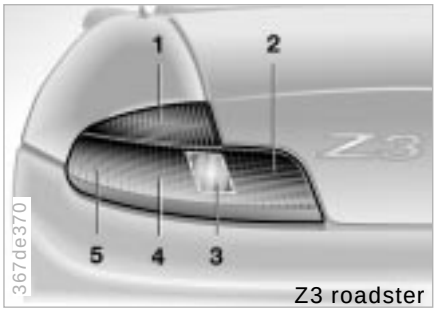

Tail lamp assembly – Z3 roadster

Tail lamp, side marker lamps:
5 watt bulbs
Remaining bulbs: 21 watt

CarManuals2.com

1	Turn signal indicator	yellow or white
2	Brake lamp	red
3	Backup lamp	white
4	Tail lamp, reflector	red
5	Side marker lamp	red

1. Open the quick-release fastener (arrow) and remove the cover
2. Turn the corresponding bulb holder to the left and remove it
3. Press gently while turning the defective bulb to the left. Remove the bulb and replace it
4. Insert the bulb holder and turn to the right as far as possible
5. Secure the cover.

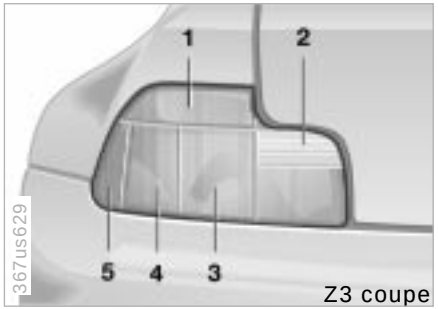

Z3 coupe

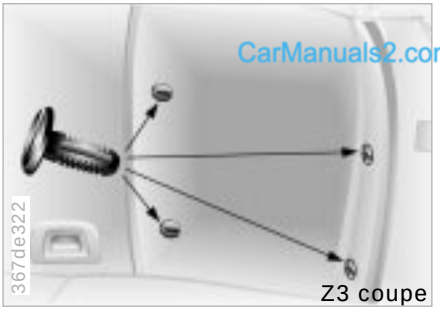

Z3 coupe

Z3 coupe

Tail lamp assembly – Z3 coupe

Tail lamp, side marker lamp:
5 watt bulbs
Remaining bulbs: 21 watt

1	Turn signal indicator	yellow or white
2	Backup lamp	white
3	Tail lamp, reflector	red
4	Brake lamp	red
5	Side marker lamps	red

1. Lift up the luggage compartment floor mat
2. To loosen, turn the mounting clips (arrows) of the right-hand trim panel on the rear wall of the luggage compartment approx. ¼ turn with a coin or screwdriver
3. Pull out the clips and remove the trim panel
4. Turn the corresponding bulb holder to the left (arrow) and remove it
5. Press gently while turning the defective bulb to the left. Remove the bulb and replace it
6. Insert the bulb holder and turn to the right as far as possible

Side marker lamps:
Pull the bulb holder out of the tail lamp assembly toward the front.

7. Reinstall the trim panel in the opposite order:
   Insert the clips and turn them approx. ¼ turn to secure them.

Z3 roadster

Center (high-mount) brake lamp – Z3 roadster

In the event of a malfunction, please consult your BMW center.

Z3 coupe

Center (high-mount) brake lamp – Z3 coupe

In the event of a malfunction, please consult your BMW center.

CarManuals2.com

License plate lamps

5 watt bulb

1. Press the lamp to the left and remove it
2. Turn the bulb holder with the bulb to the left and remove it from the lamp
3. Pull the bulb out of the bulb socket and replace
4. Install in the reverse order.

Interior lamp – Z3 roadster

10 watt bulb

1. Use a screwdriver to press out the lens at the left recess
2. Pull the bulb out of the contact lugs.

When reinstalling the lens, first position it on the left, then snap it into place.◀

Luggage compartment lamp – Z3 roadster

5 watt bulb

The lamp is located above in the luggage compartment.

1. Use a screwdriver to pry out the lamp
2. Pull the bulb out of the contact lugs.

Interior lamps – Z3 coupe

CarManuals2.com

Front:
15 watt bulb

1. Use a screwdriver to press out the lamp at the left recess
2. Press back the plastic tab on the reflector, open the reflector and replace the bulb.

Rear:
10 watt bulb

1. Use a screwdriver to press out the lamp at the side recess
2. Press back the plastic tab on the reflector, open the reflector and replace the bulb.

Reading lamps – Z3 coupe

10 watt bulbs

1. Use a screwdriver to press out the lamp at the left recess
2. Press gently while turning the defective bulb to the left. Remove the bulb and replace it.

If light intensity drops, renew the battery to safeguard against acid escaping.

Battery change

1. Remove the cover on the back of the key with a screwdriver
2. Insert a new battery (refer to the illustration) of the same type (CR 2025) so that it touches the contacts
3. Snap the cover into place and apply uniform pressure to seat it.

Return used batteries to a recycling point or to your BMW center.◀

CarManuals2.com

Changing battery

Renew when the LED no longer lights up when a button is pressed and it is not possible to lock the vehicle using the remote key.

Install only a battery of the specification (CR 2016) indicated in the battery compartment and make sure that the battery is installed in the correct position.

1. Use a screwdriver to lift the cover at the recess (arrow)
2. Loosen the two screws (arrows) and remove the cover.

The battery type and its installation position are stamped into the base of the battery compartment.

CarManuals2.com

Return used batteries to a recycling point or your BMW center.◀

New master key with remote control

If you place a new master key with remote control into service (either a replacement or an additional key), it must be initialized together with all existing master keys (with remote control):

1. Have all existing master keys with remote control as well as the spare- or ignition key present, refer to page 30
2. Enter the vehicle and close the doors
3. Briefly turn the spare key 2 or the ignition key 3 (max. 5 seconds) to position 1 in the steering lock, then return it to position 0

4. Press and hold down button 1 (see illustration). Maintain pressure on button 1 while rapidly pressing button 2 three times in succession within a period of 10 seconds
5. Release button 1. LED 3 flashes slowly for a maximum of 10 seconds
6. The central locking system engages and releases all lock mechanisms in rapid succession to indicate that the initialization procedure has been successfully completed.

If the LED does not flash or if the central locking system fails to respond, the initialization procedure will have to be repeated.

All additional master keys with remote control for your vehicle (up to a maximum of four units) must now be initialized. Make sure that no more than 30 seconds is allowed to elapse between the individual initialization procedures. Repeat steps 4 and 5. The central locking system will respond to each initialization procedure as descriped in step 6.

In the event of a system malfunction, please contact your BMW center, who can also provide you with replacement keys.

▷ Turn each new master key into ignition position 2 (ignition switched on) and back again to allow the electronic vehicle immobilizer (refer to page 31) to recognize the new key. To prevent unauthorized use of the master key, surrender only the door and ignition key 3 or the spare key 2 (refer to page 30) for valet parking, for instance.◀

CarManuals2.com

Safety measures in the event of a flat tire or a wheel change:
Stop the vehicle on a firm, level surface as far as possible from the flow of traffic. Turn on the hazard warning flashers.
Turn the steering wheel to the straight-ahead position and engage the steering lock, engage the parking brake and shift into 1st or reverse gear (selector lever in "Park" with automatic transmission).
All passengers should be outside the vehicle and well away from your immediate working area (for instance, behind the guardrail).
If a warning triangle or portable hazard warning lamp is available, set it up on the roadside at an appropriate distance from the rear of the vehicle. Comply with all safety guidelines and regulations.
Change the wheel only on a level, firm surface which is not slippery. Avoid jacking the vehicle on a soft or slippery support surface (snow, ice, tiles, loose gravel, etc.), since it could slide sideways.

Place the jack on a firm support surface.
CarManuals2.com
Do not place wooden blocks or similar objects under the jack. If this is done, the jack might not be able to reach its full support capacity because of the limited height.
Do not lie under the vehicle or start the engine when the vehicle is supported by the jack. This creates the risk of fatal injury.◀

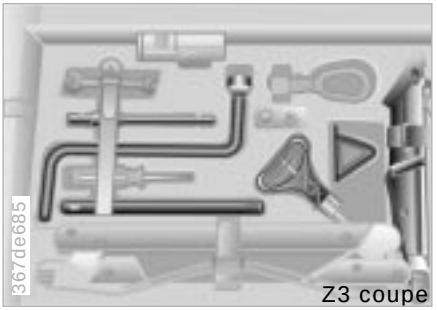

Z3 coupe

What you will need

The illustration depicts an example of the onboard tool kit of the Z3 coupe.

Other than the warning triangle, the same tools are arranged somewhat differently in the storage compartment of the Z3 roadster.

In order to avoid rattling noises later, note the position of the tools when you remove them and return them to their original position when you are through using them.

▷ Jack
Release the Velcro® fastener in the luggage compartment under the floor mat next to the battery.
After use, wind down the jack completely

▷ Wedge (wheel chock)
Next to the jack
▷ Lug wrench, centering pin, spark-plug wrench and lifting handle
In the luggage compartment under the floor mat
▷ Spare wheel
Stored under the luggage compartment on the vehicle floor and protected with a storage tray.

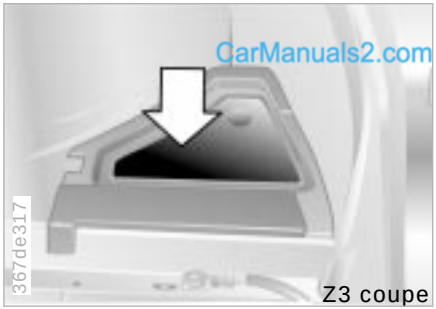

Z3 coupe

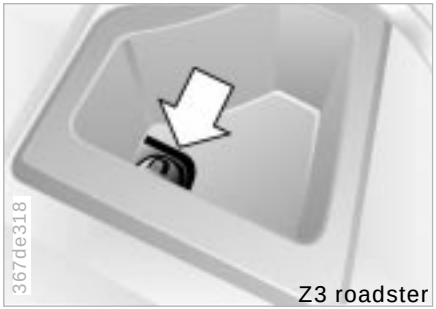

Z3 roadster

Remove the spare wheel

Z3 coupe:
Remove the floor of the storage compartment (arrow) at the right in the luggage compartment.

Release the Velcro® fastener and remove the warning triangle.

Z3 roadster:
Loosen the screw connection on the floor of the storage tray (arrow) at the right in the luggage compartment and remove the compartment.

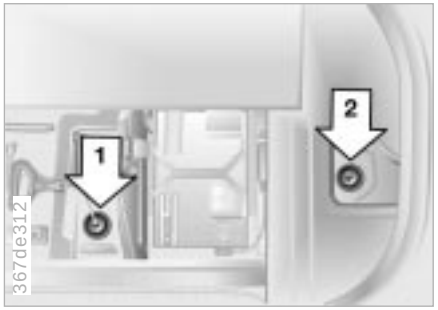

Raise and secure the floor panel in the luggage compartment.

The spare wheel is secured at two mounting points.

Left-hand attachment point – arrow 1.
Right-hand attachment point – arrow 2.

CarManuals2.com

Right-hand attachment point:
Place the spark plug wrench on the hexagon nut and, using the alignment tool to assist you, loosen the hexagon nut. Remove the hexagon nut and the protective cap.

▷ Place the hexagon nut in a secure location.◀

Left-hand attachment point:
Take the lifting handle from the tool kit, lower it on the rope and fit it on the hexagon nut. Hold the rope at the top and unscrew the nut with the lifting handle.

Pull the lifting handle up until the spare wheel tray is lifted slightly. At the same time, compress the locking spring (arrow). This releases the spare wheel (weight: approx. 8.8 lbs/4 kg). The spare wheel must then be held with the lifting handle.

Using the lifting handle, lower the spare wheel bracket with storage tray and spare wheel and place it on the ground.

Do not put your feet beneath the rear of the vehicle because the spare wheel could fall as it is being lowered.◀

Pull the storage tray with the spare wheel completely out of the spare wheel bracket toward the rear.

CarManuals2.com

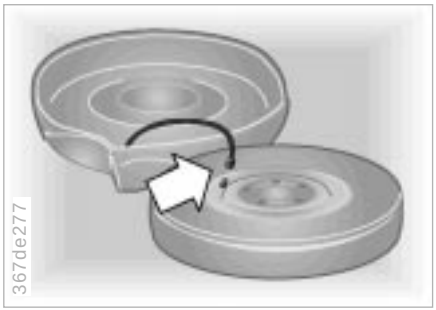

Lift the spare wheel at the front. Lay it down toward the rear next to the storage tray and with the valve facing upward. Quickly unscrew the valve extension from the valve of the spare wheel. Unscrew the valve cap from the storage tray and mount it on the spare wheel.

When the valve extension is screwed onto or off of the spare wheel, you may hear a brief hissing as air escapes.◀

The procedure for removing the spare wheel is also illustrated with pictographs located on the floor mat of the luggage compartment.

The wheel with the flat tire cannot be placed in the spare wheel bracket in the place of the spare wheel.◀

There is a plastic bag in the onboard tool kit. Put the flat tire and the storage tray into this bag.

Do not reposition the storage tray in the spare wheel bracket without the spare wheel.◀

Using the lifting handle, pull the spare wheel bracket upward until the spring retainer catches. Secure the bracket with the hexagon nut – ensure that it is tightened down correctly.

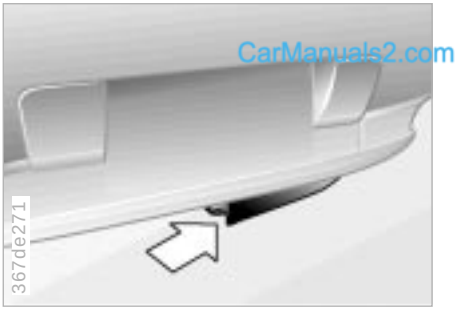

CarManuals2.com

The spare wheel is returned to its original position in the same manner as it is removed, however in the reverse order. When doing so, make sure that:

- ▷ The valve extension is mounted on the spare wheel valve
- ▷ The storage tray is facing toward the rear (see arrow) with the valve extension pointing to the inside left to ensure that it is possible to check the tire inflation pressure.

Mount the spare wheel

1. Secure the vehicle to prevent it from rolling:
   Place the wedge against the rear surface of the front tire on the side opposite the side being raised. If the vehicle is parked on a downward slope, place the wedge securely in front of the tire. If the wheel must be changed on a surface with a more severe slope, take additional precautions to secure the vehicle from rolling
2. Wheels with full wheel covers*: reach into the ventilation openings and pull the cover off
3. For wheels equipped with hub covers*: position a screwdriver in the slot and pry the hub cover off
4. Loosen the lug bolts ½ a turn

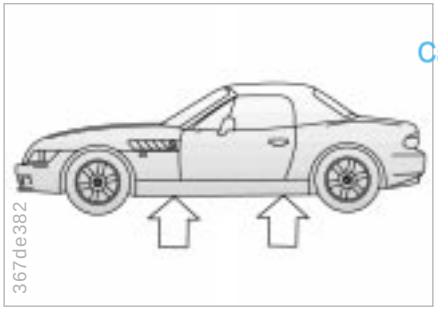

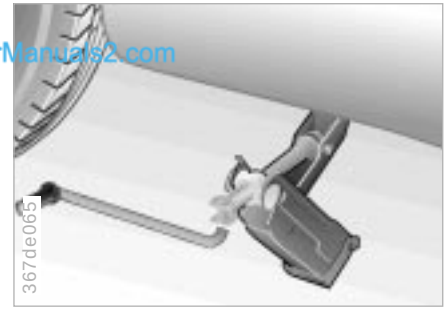

CarManuals2.com

5. Position the jack on the vehicle:
   - ▷ Plastic elements are mounted on the vehicle floorpan for positioning the jack. These positions (refer to the arrows) are located approx.
     16 in (40 cm) from the front wheel opening and
     10 in (25 cm) from the rear wheel opening
   - ▷ If necessary, remove snow, ice or mud from the plastic elements
   - ▷ Screw the jack arm up until the jack just fits under the vehicle
   - ▷ Position the jack at the jacking point closest to the flat tire so that the jack base is vertically below the jacking point and the entire surface of the head of the jack will move squarely into the recess of the plastic element when the jack is cranked
   - ▷ Crank the jack until the wheel you are changing is off of the ground.
6. Unscrew the lug bolts and remove the wheel
7. Remove accumulations of mud or dirt from the mounting surfaces of the wheel and hub. Clean the lug bolts
8. Take the centering pin from the vehicle tool kit. Insert the centering pin together with the plastic cap into one of the bolt sockets
9. Position the spare wheel and screw at least two lug bolts into opposite bolt sockets. Remove the centering pin
10. Screw in the remaining lug bolts. Tighten all the bolts down correctly
11. Lower the jack and remove it from beneath the vehicle
12. Tighten the lug bolts in a diagonal pattern

13. Wheels with full wheel covers: Place the wheel cover with the valve opening over the valve. Use both hands to press the cover securely onto the rim
14. Check and correct the inflation pressure at the earliest opportunity.

Use only the full wheel cover installed by the factory. Other wheel covers may not fit securely. The full wheel cover may not be installed on the spare wheel because the cover could be damaged.◀

The jack is designed for changing wheels only. Do not attempt to lift a different vehicle model or any other type of load with the jack. To do so could lead to property damage or personal injury.
To ensure continued safety, check the tightness of the lug bolts at the earliest opportunity (torque specification: 72 lbs ft [100 Nm]).◀

If light-alloy wheels other than Original BMW light-alloy wheels have been mounted, it may be necessary to use different lug bolts for those wheels.

Replace the defective tire as soon as possible and have the new wheel/tire balanced.

Driving with the spare wheel

Drive cautiously and do not exceed a speed of 50 mph (80 km/h).

Be aware that vehicle handling will be altered. Slower brake response time, longer braking distances and changed steering characteristics may be anticipated when approaching limit conditions.

Only one spare wheel may be mounted at any time. Mount a wheel and tire with the same size and specifications as the others at the earliest possible opportunity. Maintain the specified tire inflation pressures, refer to the table on page 27.◀

CarManuals2.com

Battery posts, terminals and related accessories contain lead and lead compounds. Wash hands after handling.◀

Battery location

The battery is located in the luggage compartment under the floor mat.

Z3 coupe:
Grasp the floor mat by the straps on the left and right. Pull it upward and remove it.

Z3 roadster:
Lift the floor mat from the rear by the strap and fold it forward.

Battery care

The battery is completely maintenance-free. That means that the original electrolyte will normally last for the service life of the battery under moderate climatic conditions.

Symbols

You will find the following symbols on your vehicle battery. To avoid injury, please comply with the corresponding precautions whenever you work with or near the battery.

Please read the following information before working with the battery.

CarManuals2.com

Wear eye protection. Do not allow particles containing battery acid or lead to come into contact with your eyes, your skin, or your clothing.

Battery acid is extremely corrosive. Wear eye protection and protective gloves. Do not tip the battery. Battery acid can leak from the ventilation openings.

Ensure that children keep well away from batteries and battery acid.

Do not allow sparks or open flame near the battery. Do not smoke near the battery. Avoid sparks from electrical cables or electrical equipment. Turn the key to position 0 in the ignition lock when the battery is disconnected or connected. Do not short circuit the battery terminals. This creates a risk of personal injury from high-voltage sparks.

A highly-explosive gas is generated when the battery is charged.

If acid is accidentally splashed into your eyes, rinse them thoroughly for 15 minutes with clear water. Following that, consult a physician immediately. If acid splashes onto your skin or clothing, rinse immediately with ample clean water. If acid is accidentally swallowed, consult a physician immediately.

In order to protect the battery case from ultraviolet radiation, do not place it in direct sunlight. A discharged battery can freeze. Store the battery in areas where temperature remains above freezing.

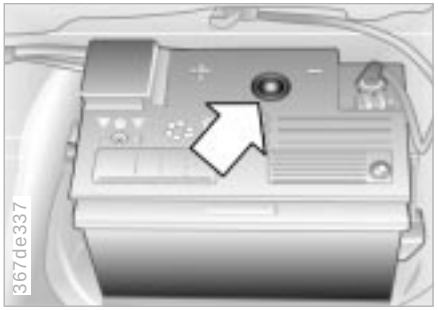

Charge condition

You can read the charge condition of the battery with the "Magic Eye" (hydrometer):

▷ Green: adequate charge
▷ Black: not charged adequately. The battery must be recharged Please contact your BMW center.
▷ Yellow: replace the battery.

▷ The projected service life of the battery can only be reached if the battery is fully-charged at all times. Check the charge condition of the battery frequently if the vehicle is used primarily for driving short distances. ◀

Charging the battery

CarManuals2.com

Charge the battery in the vehicle only when the engine is switched off. Charge the battery using the auxiliary jump-start terminal and a ground in the engine compartment, refer to Jump-starting on page 158.

⚠ Before performing any work on the electrical system, disconnect the cable from the negative terminal. If you do not, short circuits can create the risk of fire or personal injury.◀

If you plan to park the vehicle for longer than 4 weeks, disconnect the battery from the vehicle electrical system by disconnecting the cable at the negative terminal. Then recharge the battery with an appropriate battery charger.

If you intend to store your vehicle for longer than twelve weeks: remove the battery, charge it and store it in a cool (but frost- and dust-free) room. Every three months and before reinstalling the battery, have it recharged. If it is not recharged, it will not be serviceable. Every time the battery is discharged, especially over extended periods, its service life is reduced, refer also to page 131.

♻ Return used batteries to a recycling point or your BMW center. Maintain the battery in an upright position for transport and storage. Secure the battery against tilting when transporting.◀

Removal and installation

Do not disconnect the battery cables when the engine is running. Disconnecting the battery cables when the engine is running will cause a voltage surge which will damage the vehicle's onboard electronics.
Do not make any modifications in the wires leading to the positive terminal. If you do so, the battery safety terminal's safety function will no longer be guaranteed. Repair and disposal must be performed by trained technicians only.◀

When removing the battery, disconnect the negative terminal first, then the positive terminal.

Unscrew the battery retaining clamp.

CarManuals2.com

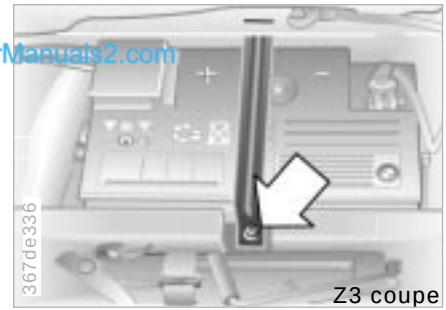

Z3 coupe

Z3 coupe:
Loosen the screw (arrow) on the battery safety bar and remove the bar.

When installing the battery, connect the positive terminal first, then connect the negative terminal.

When installing the battery, be sure that the battery and the safety bar (Z3 coupe) are mounted properly. If this is not done, the battery will not be adequately secured in case of an accident.◀

Fuses

If an electrical accessory should fail, switch it off and check the fuse.

The fuse box (electrical distribution center), which contains spare fuses, relays and plastic tweezers, is located on the left-hand side of the engine compartment, refer to page 120.

1. Press the retaining flap in and lift off the cover
2. Use the plastic tweezers to remove the fuse for the accessory or equipment that has stopped working
3. If the fuse is burned through ("blown"), the metal strip will have melted and separated. Replace the blown fuse with a new fuse of the same ampere rating (color code).

A listing of the fuses, their respective ampere ratings and the equipment in their circuits is provided on the cover of the fuse box.

When you close the fuse box, be sure that the cover is seated securely.

Do not attempt to repair a burned fuse or replace it with a fuse having a different color or ampere rating. To do this could cause a fire in the vehicle resulting from a circuit overload.◀

If a fuse burns through again, have the source of the fault checked and corrected by a BMW center.

Cadmanuals2.com

Power convertible top*

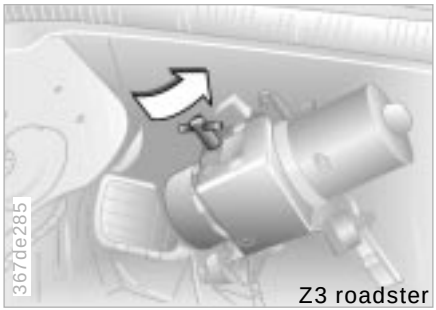

Closing manually

For roadsters with electrical power convertible top*, the convertible top drive unit is located in the luggage compartment behind the left side trim panel.

Turn the clip at the top of the trim panel to the left or right and swing the trim panel to the side.

Turn the T-pin a half turn to the left (refer to the illustration).

The convertible top drive unit is disengaged and the convertible top can be operated manually, refer to page 40.

Please have your BMW center eliminate the defect and reengage the drive.

Fuel filler door

Releasing manually

The illustration shows the example of the Z3 roadster.

Operation and function for the Z3 coupe is the same as for the Z3 roadster.

CarManuals2.com

Pull the button at the right in the luggage compartment sharply (arrow).

Please consult your BMW center to have the defect corrected.

Jump-starting

Never use spray starter fluids to start the engine.

When your battery is discharged you can used two jumper cables to start your vehicle with power from the battery in a second vehicle. You can also use the same method to help start another vehicle. Always use jumper cables with fully insulated handles on the terminal clamps.

Do not touch components carrying high-voltage on a running engine. Contact with components carrying high voltage can cause fatal injury. Carefully observe the following instructions to avoid personal injury and/or damage to one or both vehicles.◀

1. Ensure that the battery in the support vehicle is also rated at 12 volts. This information is provided on the top of the battery casing
2. Do not disconnect the battery from your vehicle's electrical system. Switch off all electrical accessories in both vehicles
3. Make absolutely certain that there is no contact between the bodywork of the two vehicles – short circuit hazard

CarManuals2.com

4. Start the engine on the support vehicle and allow it to run
5. Use the jumper cable (+) to connect the positive terminal of the battery in the support vehicle with the auxiliary positive terminal provided in the engine compartment of your BMW specifically for jump-starting. The cover on this auxiliary terminal is identified by a "+" symbol, refer to the illustration. Pull up to open the cover

6. Then connect the negative terminals. Connect one end of the other jumper cable (–) to either the support vehicle's negative battery terminal or a suitable ground on its engine or bodywork. Connect the other end to the negative battery terminal or a suitable ground on the vehicle being started. There is a special nut on the strut dome of your BMW; refer to the arrow in the illustration

Always adhere to this sequence when connecting jumper cables; failure to observe this procedure can lead to sparks at the battery terminals and pose an injury hazard.◀

7. Start the support vehicle's engine and let it run at an increased idling speed for a few minutes. Start the engine on the vehicle needing the jump-start, and allow it to run as usual. If the first start attempt is not successful, wait a few minutes before another attempt in order to allow the discharged battery to recharge
8. Before disconnecting the jumper cables let the engines run for a few minutes
9. Then disconnect the jumper cables in reverse sequence.

Depending on the cause of the fault, have the battery recharged by your BMW center.

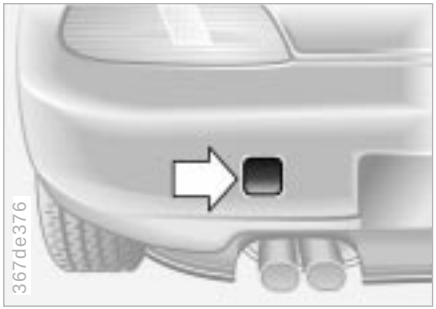

Tow fitting

The screw-in tow fitting is stored in the onboard tool kit; be sure that it remains in the vehicle at all times. This fitting is designed for installation in the tow sockets located at the front and rear of the vehicle, and is intended for towing on paved road surfaces only.
It should not be used to pull a vehicle out of deep snow, mud, sand, etc.
Comply with all applicable towing laws and regulations at all times.

Access to tow sockets

Front:
Use a screwdriver to press the cover out.

CarManuals2.com

Rear:
Use a screwdriver to press the cover out.

⚠ Screw the tow fitting in until it is tight against the stop. If you do not, the threads can be damaged.
Do not tow the vehicle by any components of the running gear, or lash them down in any way. If you do so, the components could be damaged, leading to possible accidents.◀

Use only a nylon towing strap to tow the vehicle, since the inherent resilience of this material helps protect both vehicles from sudden jerking movements.

The towed vehicle should always be the lighter of the two vehicles. If this is not the case, it will not be possible to control vehicle handling.◀

Tow-starting

It is not possible to start the engine of a vehicle with an automatic transmission by towing or pushing the vehicle.

For instructions on jump-starting, refer to page 158.

Never attempt to use your vehicle to push another vehicle. This could result in damage to the energy-absorbing bumpers.

Towing a vehicle with automatic transmission

1. Place the selector lever in position "N"
2. Towing speed: max. 45 mph (70 km/h)
3. Towing distance: max. 95 miles (150 km)
4. Leave the ignition key in position 1 to ensure that brake lamps, turn signal indicators, horn and windshield wipers remain operative, and to prevent the steering lock from engaging
5. Switch on the hazard-warning flashers (observe applicable legal regulations).

Find some means of identifying the vehicle in tow. Place a sign or warning triangle in the rear window, for instance.

Even when the electrical system has failed, make sure that the ignition key remains in position 1 to prevent the steering lock from engaging.
The steering and brakes are without power assist when the engine is off. This means that increased effort is required for steering and braking.◀

CarManuals2.com

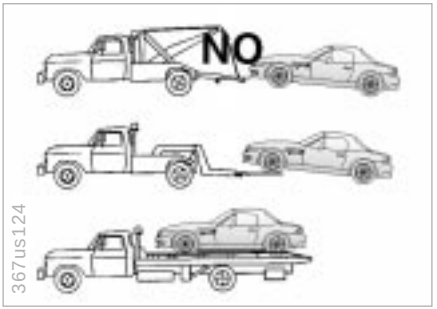

Towing with a commercial tow truck

▷ Do not tow with sling-type equipment
▷ Use a wheel-lift or flatbed equipment
▷ Comply with applicable towing laws.

Never allow passengers to ride in a towed vehicle for any reason.
Never attach tie-down hooks, chains, straps, or tow hooks to tie rods, control arms, or any other part of the vehicle suspension, as severe damage to these components will occur, leading to possible accidents.◀

CarManuals2.com

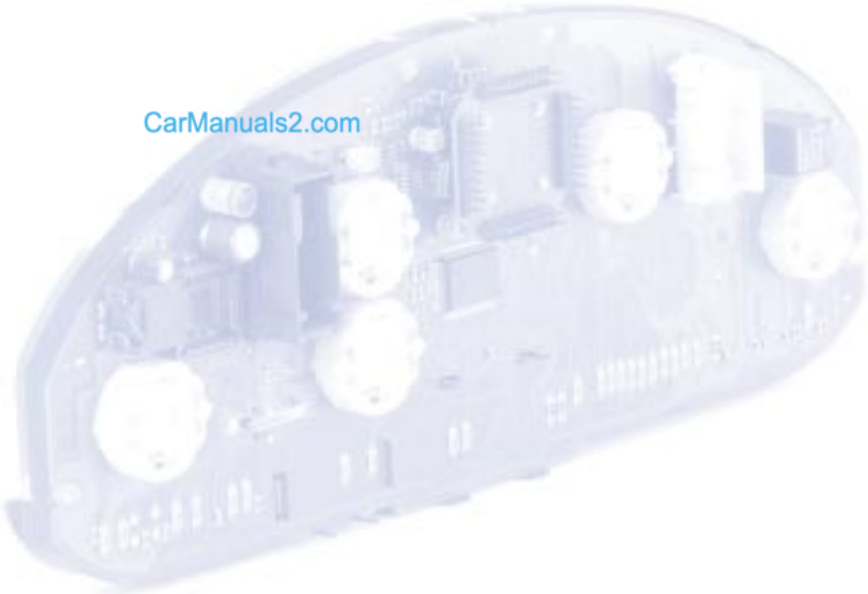

CarManuals2.com

Adaptive Transmission Control (ATC) 164
Airbags 164
Automatic Stability Control plus Traction (ASC+T)/Dynamic Stability Control (DSC) 165
Car radio reception 166
Safety belt tensioner 166

CarManuals2.com

ATC*

For vehicles with automatic transmission, Adaptive Transmission Control (ATC) performs the optimum gear selection based on a number of factors. This system reacts to your individual driving style and the current driving conditions.

The ATC recognizes your individual driving style from the positions and movements of the accelerator pedal, delays during braking, and the vehicle's lateral acceleration when cornering. ATC makes the appropriate selection from different shift characteristics which range from comfort-oriented to performance-oriented.

In order to take driving conditions into account, ATC registers corners and both uphill and downhill gradients. For example, if you maintain speed through a curve, the transmission does not upshift.
On uphill gradients, it shifts only when the engine speed increases in order to make more efficient use of power reserves. On downhill gradients ATC downshifts when the speed of the vehicles increases causing the driver to step on the brakes.

Airbags

Deceleration sensors continuously monitor the physical forces acting upon the vehicle. In the event of a severe frontal impact, the gas generators of the driver and passenger-side front airbags are ignited simultaneously. However, the passenger-side airbag is only triggered if an additional sensor has recognized that the passenger seat is occupied.

If it is necessary during a side impact, a side airbag will be triggered on the side where the collision occurs.

CarManuals2.com

Airbags

The airbags located under the marked covers inflate and unfold in a matter of a few milliseconds. In this process they tear through the designed breaking points of the upholstered covers or press them out.

Because the inflation process must be virtually instantaneous, it is necessarily accompanied by a certain amount of ignition and inflation noise. The gas required to inflate the airbags is not dangerous, and it dissipates together with the associated smoke.

The entire process is completed within fractions of a second.

ASC+T/DSC*

Precision sensors monitor the number of revolutions of the wheels. When equipped with DSC, they also monitor steering angle, lateral acceleration, brake pressure and the movement of the vehicle around its vertical axis.

If differences in the wheel speeds occur, ASC+T recognizes the danger of wheel-spin and reduces the drive torque. If necessary, the system also responds with additional applications of the brakes at the rear wheels.

In addition, DSC permanently monitors the vehicle's current operating condition and compares it with an ideal condition that is calculated from the sensor's signals. If deviations from this occur (understeering or oversteering, for instance), DSC can stabilize the vehicle in fractions of a second by adjusting engine output and with the assistance of braking intervention at individual wheels. Within physically possible limits dangerous skids can be prevented even as they are just beginning.

CarManuals2.com

You may need some time to become accustomed to this system's intervention. However, it provides optimum propulsive force and driving stability.

The braking intervention may be accompanied by a certain degree of noise.

Car radio reception

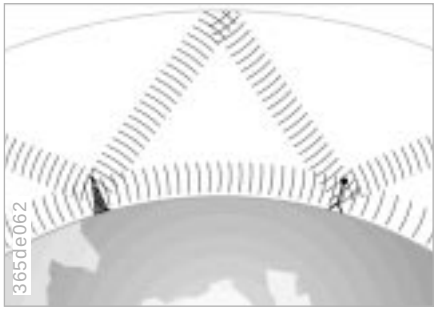

The AM frequency bands (medium-wave, long-wave and short-wave) make it possible to receive stations from a great distance, because the broadcast signals travel not only along the ground as surface waves, but also as atmospheric waves that are reflected from the ionosphere.

Frequency-modulation (FM) provides substantially better sound quality than AM. However, because FM transmissions rely on line-of-sight broadcast waves, their effective reception range is limited.

The limitations which are inherent to radio reception in a moving vehicle have been minimized by the use of innovative systems.

Safety belt tensioner

The safety belt tensioner responds to severe collisions by tightening the belts to ensure that occupants remain firmly positioned in their seats. A gas-pressure system retracts the buckle assembly to tension the shoulder and lap belts within fractions of a second. This tends to further reduce the tendency to slide under the lap belt.

CarManuals2.com

CarManuals2.com

CarManuals2.com

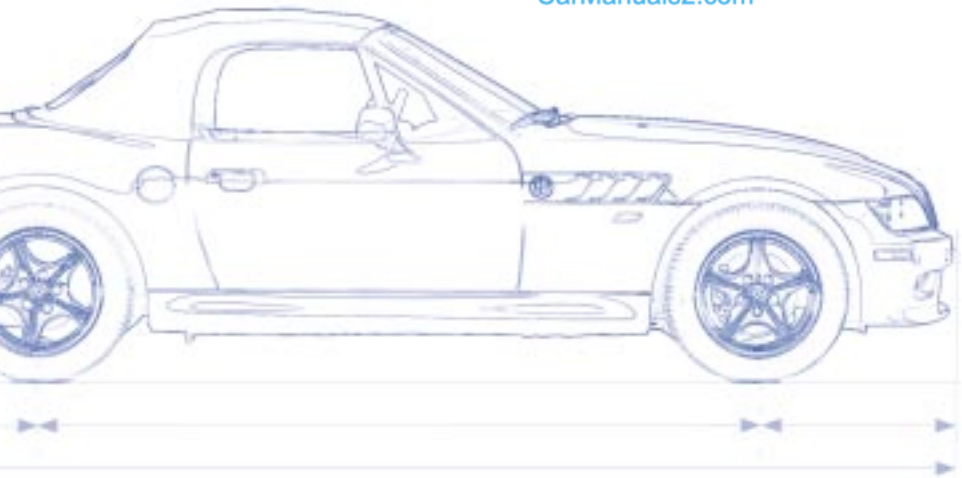

Engine specifications 170
Dimensions 171
Weights 172
Capacities 173
Electrical system 174
Drive belts 174

CarManuals2.com

Engine specifications

		Z3 roadster 2.5i	Z3 roadster 3.0i, Z3 coupe 3.0i
Displacement Number of cylinders	cu. in (cm^3)	152.2 (2,494) 6	181.8 (2,979) 6
Maximum power output at engine speed	hp rpm	184 6,000	225 5,900
Maximum torque at engine speed	lb-ft (Nm) rpm	175 (237) 3,500	214 (290) 3,500
Compression ratio	ε	10.5	10.2
Stroke Bore	in (mm) in (mm)	2.95 (75.0) 3.31 (84.0)	3.53 (89.6) 3.31 (84.0)
Fuel-injection system		Digital electronic engine-management system	

CarManuals2.com

		Z3 roadster 2.5i, 3.0i	Z3 coupe 3.0i
Length	in (mm)	159.4 (4,050)	158.5 (4,025)
Width	in (mm)	68.5 (1,740)	68.5 (1,740)
Height (unloaded)	in (mm)	50.9 (1,293)	51.4 (1,306)
Wheelbase	in (mm)	96.3 (2,446)	96.3 (2,446)
Track, front	in (mm)	55.6 (1,413)	55.6 (1,413)
Track, rear	in (mm)	58.8 (1,494)	58.8 (1,494)
Min. turning circle dia.	ft (m)	32.8 (10.0)	32.8 (10.0)

CarManuals2.com

Weights

		Z3 roadster 2.5i	Z3 roadster 3.0i	Z3 coupé 3.0i
Curb weight (with one person, ready for operation, full tank of fuel, options not included)				
with manual transmission	lbs (kg)	2,899 (1,315)	2,910 (1,320)	2,943 (1,335)
with automatic transmission	lbs (kg)	2,987 (1,355)	2,998 (1,360)	3,031 (1,375)
Approved gross vehicle weight				
with manual transmission	lbs (kg)	3,450 (1,565)	3,461 (1,570)	3,494 (1,585)
with automatic transmission	lbs (kg)	3,538 (1,605)	3,549 (1,610)	3,582 (1,625)
Approved front axle load	lbs (kg)	1,852 (840)	1,852 (840)	1,830 (830)
Approved rear axle load	lbs (kg)	1,918 (870)	1,918 (870)	1,918 (870)
Approved roof load capacity	lbs (kg)	77 (35)	77 (35)	110 (50)
Luggage compartment capacity	cu ft (liters)	5.8 (165)	5.8 (165)	7.2 - 14.3 (205 - 405)

CarManuals2.com

			Notes
Fuel tank reserve	gal. (liters) gal. (liters)	approx. 13.5 (approx. 51) approx. 2.1 (approx. 8.0)	Fuel specification: page 26
Windshield washer system/ Headlamp washer system	quarts (liters)	approx. 5.3 (approx. 5.0)	For details: page 122
Cooling system including heating circuit	quarts (liters)	11.1 (10.5)	For details: page 125
Engine with oil filter renewal	quarts (liters)	6.9 (6.5)	"BMW High Performance Synthetic Oil" For details: page 124
Manual transmission, automatic transmission and differential		–	Lifetime fluid, no fluid change required

CarManuals2.com

Battery

12V, 70 Ah

Spark plugs

NGK BKR 6 EQUP

This spark ignition system meets all requirements of the Canadian Interference-Causing Equipment Regulations (ICES-2).

Drive belts

Generator – Water pump – Power steering
Drive belt 6 PK x 1538

CarManuals2.com

A/C compressor
Drive belt 5 PK x 863

You can obtain Original BMW parts and accessories, as well as professional advice from your BMW center.◀

CarManuals2.com

CarManuals2.com

Everything from A to Z 178

Overview

Controls and features

Operation, maintenance

Owner service procedures

Advanced technology

Technical data

Index

CarManuals2.com

Everything from A to Z

A

ABS (Antilock Brake System) 101
Accessories 6
Adaptive Transmission Control (ATC) 62, 164
ADB (Automatic Differential Braking) 74
Adding
  brake fluid 126
  engine coolant 126
  engine oil 123
  washer fluid 122
Additional storage areas 90
Adjusting
  backrest 50
  mirrors 50, 51
  seat 49
  washer nozzles 122
Air conditioner 84
Air distribution 82, 86
Air outlets 80, 84
  ventilation 85
Air supply 82, 86
Air vents 80, 84
Airbags 21, 54, 164
  important safety notices 130
  sitting correctly 55
Antenna 107
Antifreeze 126
Antifreeze protection, radiator 105, 125
Antilock Brake System (ABS) 101
Anti-theft system 32
Approved gross vehicle weight 172
Approved wheel and tire specifications 116
Aquaplaning 99, 111
ASC+T (Automatic Stability Control plus Traction) 73, 165
Ashtray 91
ATC (Adaptive Transmission Control) 62, 164
Automatic cruise control 67
Automatic Differential Braking (ADB) 74
Automatic rear window washer 65
Automatic Stability Control plus Traction (ASC+T) 73, 165
Automatic transmission with Steptronic 62
  gear indicator 68
Automatic windshield washer 122
Average fuel consumption 72
Average speed 72

B

Backrest, adjusting 50
Backup lamps 61
  bulb replacement 139, 140
Battery 153, 174
  capacity 174
  charge condition 154
  charging 154
  discharged 158
  disposal 154
  removal and installation 155
Battery change, keys 143
Battery charge indicator lamp 20
Battery safety terminal 155
Beverage holder 91
BMW High Performance Synthetic Oil 124
Brake fluid 126
  disposal 127
Brake hydraulic system 20
Brake lamps, bulb replacement 139, 140
Brake pads 22, 104
Brake system 103, 104
  brake fluid 126
  fluid level 104
  winter road conditions 105
Brakes, malfunctions 104
Break-in procedure 98
Bulb replacement 137

C

California Proposition 65 Warning 132
Capacities 173
Car jack 146
Car keys 30
Car radio
  reception 107, 166
  refer also to the separate Owner's Manual
Car wash systems, refer to the "Caring for your vehicle" manual

CarManuals2.com

Care of paintwork, refer to the "Caring for your vehicle" manual
Care of upholstery materials, refer to the "Caring for your vehicle" manual
Cargo loading 94
Caring for the vehicle finish, refer to the "Caring for your vehicle" manual
Catalytic converter 100
CBC (Cornering Brake Control) 102
Cellular phone 107
refer also to the separate Owner's Manual
Center (high-mount) brake lamp 141
Central locking system 32
Changing a wheel 146
Charge condition of the battery 154
Charging the battery 154
Chassis number 127
Checking oil level 123
Checking tire pressure 26, 110
Child seat 56
Child-restraint device 56
Child-restraint system 56
installation 57
Z3 coupe with tether strap 57
Cigarette lighter 92
Cleaning the headlamps 66
Cleaning the rear window 66
Cleaning the windshield 65
Clock 70
Cockpit 16
Coin box 91
Cold start 59
Compartments 90
Computer 70
refer also to the "Owner's Manual for Onboard Computer"
Connecting a car vacuum cleaner 92
Controls, cockpit 16
Convertible top
electrical malfunction 157
manual operation 157
operation 40, 44
weather protection 44
Coolant 105, 126
Coolant temperature 69
Coolant, antifreeze protection 105
Copyright 4
Cornering Brake Control (CBC) 102
Cover, convertible top 41, 46
Cruise control 67
Cruising range 72
Cup holder, refer to beverage holder 91
Curb weight 172

D

Dashboard 16
Data link connector for Onboard Diagnostics 133
Daytime driving lamps 76
DBC (Dynamic Brake Control) 103
Deep water 99
Defrost windows and remove condensation 83, 88
Defrosting
rear window 66
mirrors 51
Difficult steering 106
Digital clock 70
Dimensions 171
Dipstick, engine oil 123
Disc brakes 103
Displacement 170
Display lighting 76
Displays 18
Disposal
batteries 154
brake fluid 127
coolant 125
engine oil 125
Door key 30
Doors
electrical malfunction 32
manual operation 32
operating with the remote control 33
unlocking and locking 32
DOT Quality Grades, tires 111
Drive belts 174
Driving notes 99
Driving through water 99

CarManuals2.com

Everything from A to Z

DSC (Dynamic Stability Control) 74, 165
Dynamic Brake Control (DBC) 103
Dynamic Stability Control (DSC) 74, 165

E

Electric convertible top operation 44
Electric power windows 38
Electrical malfunction
convertible top 157
doors 32
fuel filler door 157
luggage compartment lid 37
power convertible top 157
Electrical system 174
Electronic immobilizer 31
Emergency release of luggage compartment lid from luggage compartment's interior 38
Engine compartment 120, 121
Engine coolant 126
adding 126
Engine oil 123
adding 123
dipstick 123
disposal 125
grades 124
level 21, 123
pressure 20
viscosity 124
Engine output 170
Engine specifications 170
Exterior mirrors 50

F

Failure of an electrical accessory 156
Fan 82, 86
Filler cap cover 25
Filling the washer reservoir 122
First-aid kit 24
Fittings, tow-starting and towing 159
Flasher, headlamp 64
Flat tire 111
Z3 roadster, Z3 coupe 146
Folding top 40
Footbrake 103
Front airbags 54, 130
Front fog lamps 76
bulb replacement 139
Frost protection, radiator 105
Fuel 26
Fuel consumption, average 72
Fuel filler door
electrical malfunction 157
manual operation 157
Fuel gauge 68
Fuel specifications 26
Fuel tank capacity 173
Fuses 156

G

Gasoline 26
Gear indicator 68
Glass sunroof 39
Glove compartment 90
Grilles 80, 84
Gross vehicle weight 172

H

Hardtop 108
Hazard warning flashers 24
Hazard warning system 24
Hazard warning triangle 24
Head restraints 50
Headlamp cleaning system 122
Headlamp cover, care 137
Headlamp flasher 64
Headlamp washers 66
Headlamps, high beam 23, 64
bulb replacement 137
Headlamps, low beam 76
bulb replacement 137

CarManuals2.com

Heated seats 89
Heating and ventilation 80, 84
Heat-up, rapid 83
Height 171
Height adjustment, seats 49
Help with jump starting 158
High beams 23, 64
bulb replacement 137
High Performance Synthetic Oil 124
High-mount brake lamp (center) 141
Hood release 118
Horn 17
Hub cover 150
Hydraulic brake assistant, refer to DBC

I

Ice warning 71
Identification number of the vehicle 127
Identification, tires 114
Ignition key 30
Ignition switch 58
Immobilizer, electronic 31
Immobilizer, vehicle 31
Imprint 4
Indicator lamps 20
Inflation pressures 26, 110
Inflation pressures, tires 26
INSPECTION 69
Instrument panel 16
lighting 76
Instruments 18
Interface socket for onboard diagnostics (OBD) 133
Interior lamps 77
bulb replacement 142
Interlock 58
Intermittent wipe switch 65

J

Jack 146
Jump-starting 158

K

Keys 30
Keys with remote control 30, 33
Key, battery change 143
Kickdown 63

L

Lamp switch 76
Lashing eyes 94
Leather care, refer to the "Caring for your vehicle" manual
Length 171
License plate lamps
bulb replacement 141
Light-alloy wheel 116
LIGHTS ON warning 76
Limited slip differential 166
Load-securing devices 94
Lock buttons 36
Locks, care 105
Low beams 76
bulb replacement 137
Low-fuel indicator lamp 68
Lug bolts 150, 151
Lug wrench 147
Luggage compartment 36
capacity 172
locking separately 37
Luggage compartment lamp
bulb replacement 142
Luggage compartment
lid 36
electrical malfunction 37
emergency release from luggage compartment's interior 38
manual operation 37

M

M + S tires 115
Magic Eye
refer to Battery charge condition 154
Maintenance 69, 128
Malfunction, cellular phone 107
Manual operation
doors 32
fuel filler door 157
luggage compartment 37
luggage compartment lid 37
Manual transmission 61
Master key with battery lamp 143

CarManuals2.com

Master keys 30
changing battery 144
initializing 144
replacements 144
Mirrors 50
adjusting 51
defrosting 51
Mobile phone 107
refer also to the separate Owner's Manual
Modifications, technical 6, 132
Multifunction switch 64
M+S radial tires 115

N

Net 93
Non-smoker's equipment package 92
Notes on driving 99

O

OBD interface socket 133
Odometer 68
Oil
adding 123
additives 123
consumption 123
grades 124
Oil change intervals, refer to the Service and Warranty Information Booklet (US models) or the Warranty and Service Guide Booklet (Canadian models)
Oil dipstick 123
Oil level, checking 123
Oil level, indicator lamp 21
Oil pressure, indicator lamp 20
OILSERVICE 69
Old batteries 154
Onboard computer 70
refer to the "Owner's Manual for Onboard Computer"
Onboard Diagnostics, data link connector 133
Onboard tool kit 136
Opening and closing
from the inside 36
from the outside 32
with the remote control 33
Outside mirrors 50
Outside temperature display 71

P

Parking brake 21, 60
Parking lamps 76
Parking, winter 106
Partition net 93
Phone, mobile 107
refer also to the separate Owner's Manual
Please wear your safety belt warning lamp 21
Position lamps
bulb replacement 138
Power convertible top
electrical malfunction 157
manual operation 157
Power seat adjustment 49
Power steering 106
Pressures, tires 26, 110
Pressure, tires 110

Q

Quality Grades, tires 111

R

Radiator, frost protection 105
Radio reception 166
Radio, refer to the separate Owner's Manual
Rapid heating 83, 88
Reading lamps 78
Rear lamps, bulb replacement 139
Rear window defroster 66
Rear window washer, automatic 65
Rear window wiper 65
blade replacement 136
Rearview mirrors 50
Recirculated air mode 86
refer to spare wheel 147
Refueling 25
Releasing the hood 118
Remote control 33, 144
for computer 70
Remove condensation from windows 83
Replacement keys 30
Replacement, tires 111, 112

CarManuals2.com

Replacing fuses 156
Replacing windshield wiper blades 136
Reporting safety defects 7
Reservoir, washer system 122
Roll-up cover 93
Roof load capacity 172
Roof-mounted luggage rack 95
Rubber seals and components, winter 105

S

Safety belt tensioner 166
Safety belts 52
Safety defects, reporting 7
Seals and components, winter 105
Seat adjustment 49
Seat heating 89
Securing cargo 94
Selector lever, automatic transmission 62
Service and Warranty Information Booklet (US models) 129
Service Interval Display 69, 128
Set temperature 82, 86
Shiftlock 62
Side airbags 54, 130
Side marker lamps, bulb replacement 139
Sitting correctly with airbags 55
Skid control 106
Slippery roads 105
Snow chains 105
Socket 92
  electrical appliances 92
  flashlight 92
  vacuum cleaner 92
Spare keys 30
Spare tire 147
Spare wheel 147
Spark plugs 174
Special features of winter tires 115
Special oils 124
Specifications, engine 170
Speed, average 72
Speed control 67
Starting assistance 158
Starting problems 59, 100, 158
Starting the engine 59
Steel wheel 116
Steering 106
Steering wheel lock 58
Steptronic 62
Storage boxes 90
Storage compartments 90
Storage trays 90
Storing the vehicle 130
Summer tires 114
Sunroof 39
Switching off the engine 60
Symbols 4, 153

T

Tachometer 68
Tail lamp assembly, bulb replacement 139
Tail lamps 139, 140
  bulb replacement 139, 140
Tank capacity 173
Technical Data 169
Technical modifications 6, 132
Telephone
  refer to the separate Owner's Manual
Temperature display
  engine coolant 69
  outside temperature 71
Temperature layering 82, 87
Third brake lamp 141
Tire change, refer to wheel change 146
Tire condition 110
Tire failure, Z3 roadster, Z3 coupe 146
Tire inflation pressures 110
  checking 26
Tire Quality Grading 112
Tire replacement 111, 112
Tire rotation between front and rear 113
Tire size 116
Tire tread 110
Tires, identification 114
Tools 136
Torque 170
Tow fittings 159
Towing the vehicle 159

CarManuals2.com

Track width 171
Traction Control System
refer to ASC+T/DSC
Transmission 61, 62
Tread depth, tires 111
Trip odometer 68
Turn signals 23, 64
bulb replace-
ment 138, 139
Turning circle 171
Two-way radios 107

U

Uniform Tire Quality
Grading 112
Use of antifreeze 126
Used batteries 154

V

Vacuum cleaner,
connecting 92
Valve caps 114
Vanity mirrors 51
Vehicle battery 153, 174
Vehicle Identification
Number 127
Vehicle immobilizer 31
Vehicle jack 146
Vehicle keys 30
Vehicle storage 130
Ventilation 80, 84
outlets 80, 84
Ventilation, draft-free 82, 87
Vents 80, 84
Viscosity 124

W

Warm feet – cool
head 82, 87
Warning lamps 20
Warning triangle 24
Warranty and Service Guide
Booklet (Canadian
models) 129
Washer fluid, adding 122
Washer nozzles,
adjusting 122
Washer reservoir,
filling 122
Washers, headlamp 66
Washing your vehicle, refer
to the "Caring for your
vehicle" manual
Waxing your vehicle, refer to
the "Caring for your
vehicle" manual
Weights 172
Wheel change 146
Wheelbase 171
Wheels and tires 114
Width 171
Windows, convenience
closing mode 32
Windshield washer 122
filling reservoir 122
nozzles 122
Windshield wipers 65
blade replacement 136
Winter driving 105
Winter tires 115
Wiper blade
replacement 136
Wipers 65
Wiper/Washer system 65
Working in the engine
compartment 118

CarManuals2.com

Refueling

BMW recommends Castrol

To ensure that you always have convenient access to all essential information when you stop for fuel, we recommend that you fill out the adjoining chart by entering the data that apply to your vehicle.
Consult the index for individual specifications.

Fuel

Designation	

Please enter your preferred fuel here.

Engine oil

Quality	

The oil volume between the two marks on the oil dipstick corresponds to approx. 1.1 US quarts (1 liter)

CarManuals2.com

Tire inflation pressures	Summer tires		Winter tires	
	Front	Rear	Front	Rear
2 persons				

More about BMW

bmwusa.com

The Ultimate
Driving Machine

01 41 0 156 441 ue

CarManuals2.com

Online Edition for Part No. 01 41 0 156 441 - © 10/01 BMW AG

CarManuals2.com

Online Edition for Part No. 01 41 0 156 441 - © 10/01 BMW AG