Chevrolet Suburban 2000 fuse box diagram

Instrument panel fuse block

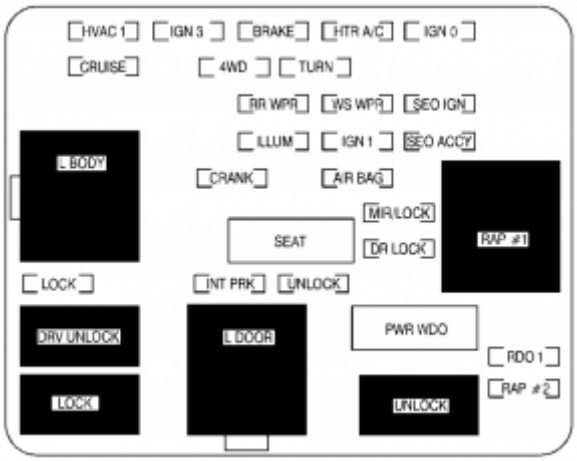

Chevrolet Suburban – fuse box – instrument panel

Name	Circuit protected
L BODY	Retained Accessory Power Relay
LOCK	Power Door Locks
DRV UNLOCK	Power Door Lock Relay
LOCK	Power Door Lock Relay
HVAC 1	Climate Control System
CRUISE	Cruise Control, Instrument Cluster
IGN 3	Ignition, Power Seats
4WD	Four-Wheel Drive System, Auxiliary Battery
CRANK	Starting System
INT PRK	Parking Lamps, Sidemarker Lamps, Interior Lamps
L DOOR	Power Door Lock Relay
BRAKE	Anti-Lock Brake System
RR WIPER	Rear Window Wiper
ILLUM	Interior Lamps
SEAT	Power Seat Circuit Breaker
TURN	Exterior Lamps, Turn Signals, Hazard Lamps
UNLOCK	Power Door Locks
HTR A/C	Climate Control System
WS WPR	Windshield Wipers
IGN 1	Ignition, Instrument Panel
AIR BAG	Air Bag
MIR/LOCK	Power Mirrors, Power Door Locks
DR LOCK	Power Door Locks
PWR WDO	Power Window Circuit Breaker
UNLOCK	Power Door Lock Relay

IGN 0	PRND321 Display, Odometer, VCM/PCM
SEO IGN	Special Equipment Option, Ignition
SEO ACCY	Special Equipment Option Accessory, Cellular Telephone
RAP#1	Retained Accessory Power Relay
RDO 1	Audio System
RAP #2	Rear Power Windows, Sunroof, Radio

Center Instrument Panel Utility Block

The center instrument panel utility block is located underneath the instrument panel, to the left of the steering column.

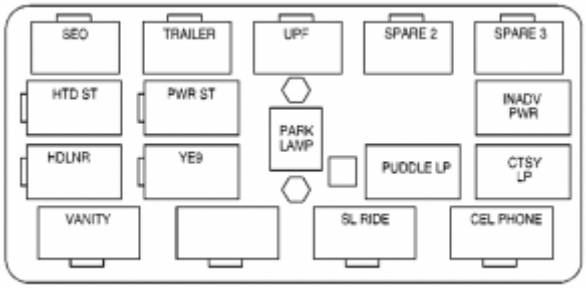

Chevrolet Suburban – fuse box – center instrument panel utility

Relay Name	Circuit protected
SEO	Special Equipment Option
HTD ST	Heated Seats
HDLNR	Headliner
VANITY	Headliner Wiring
TRAILER	Trailer Brake Wiring
PWR ST	Power Seats
Y9	Not Used
UPF	Upfitter
PARK LAMP	Parking Lamps
FRT PRK EXPT	Not Used
SPARE 2	Not Used
PUDDLE LP	Not Used
SL RIDE	Not Used
SPARE 3	Not Used
INADAV PWR	Interior Lights Feed
CTSY LP	Courtesy Lamps
CEL PHONE	Cellular Telephone Wiring

Underhood Electrical Center

The underhood electrical center is located on the driver’s side of the engine compartment near the battery.

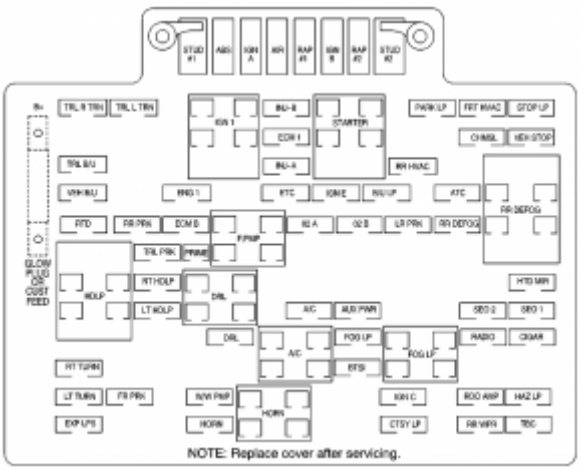

Chevrolet Suburban – fuse box – underhood electrical center

Name	Circuit protected
STUD #1	Accessory Power/Trailer Wiring Feed/Load Leveling
ABS	Anti-Lock Brakes
IGN A	Ignition Switch
AIR	A.I.R. System
RAP #1	Retained Accessory Power, Power Mirrors, Power Door Locks, Power Seat(s)
IGN B	Ignition Switch
RAP #2	Retained Accessory Power/Rear Power Windows, Sunroof, Radio
STUD #2	Accessory Power/Trailer Wiring Brake Feed
TRL R TRN	Right Turn Signal Trailer Wiring
TRL L TRN	Left Turn Signal Trailer Wiring
IGN 1	Ignition, Fuel Controls
INJ B	Ignition, Fuel Controls (Relay)
STARTER	Starter (Relay)
PARK LP	Parking Lamps
FRT HVAC	Climate Control System
STOP LP	Exterior Lamps, Stoplamps
ECM 1	VCM/PCM
CHMSL	Center High Mounted Stoplamp
VEH STOP	Stoplamps, Cruise Control
TRL B/U	Backup Lamps Trailer Wiring
INJ A	Fuel Controls, Ignition
RR HVAC	Rear HVAC
VEH B/U	Vehicle Backup Lamps
ENG 1	Engine Controls, Canister Purge, Fuel System
ETC	Electronic Throttle Control
IGN E	A/C Compressor Relay, Rear Window Defogger, Daytime Running Lamps, A.I.R. System
B/U LP	Backup Lamps, Automatic Transmission Shift Lock Control System
RR DEFOG	Rear Window Defogger, Heated Mirrors (Relay)

RTD	Autoride (Real Time Damping)
RR PRK	Right Rear Parking Lamps
ECM B	VCM/PCM
F/PMP	Fuel Pump (Relay)
O2 A	Oxygen Sensors
O2 B	Oxygen Sensors
LR PRK	Left Rear Parking Lamps
RR DEFOG	Rear Window Defogger, Heated Mirrors
HDLP	Headlamps (Relay)
TRL PRK	Parking Lamps Trailer Wiring
PRIME	Not Used
RT HDLP	Right Headlamps
DRL	Daytime Running Lamps (Relay)
HTD MIR	Heated Mirrors
LT HDLP	Left Headlamps
A/C	Air Conditioning
AUX PWR	Cigarette Lighter, Auxiliary Power Outlets
SEO 2	Special Equipment Option Power, Power Seats, Aux Roof Mnt Lamp
SEO 1	Special Equipment Option Power, Aux Roof Mnt Lamp, Cell Phone
DRL	Daytime Running Lamps
A/C	A/C (Relay)
FOG LP	Fog Lamps
FOG LP	Fog Lamps (Relay)
RADIO	Audio System, Instrument Cluster, Climate Control System
CIGAR	Cigarette Lighter, Auxiliary Power Outlets
RT TURN	Right Turn Signals
BTSI	Automatic Transmission Shift Lock Control System
LT TURN	Left Turn Signals
FR PRK	Front Parking Lamps, Sidemarker Lamps
W/W PMP	Windshield Washer Pump
HORN	Horn (Relay)
IGN C	Ignition Switch, Fuel Pump, PRND321 Display, Crank
RDO AMP	Radio Amplifier
HAZ LP	Exterior Lamps, Hazard Lamps
EXP LPS	Not Used
HORN	Horn
CTSY LP	Interior Lamps
RR WPR	Rear Wipers
TBC	Body Control Module, Remote Keyless Entry, Headlamps