Table of Contents

N63 Engine

Subject **Page**

Introduction 5
Engine Designations 6
Engine Identification and Serial Number 6

Engine Mechanical 7
Engine Housing Components 7
Crankcase 7
Oil Pan 8
Cylinder Head Covers 9
Cylinder Head 9
Engine Internal Components 10
Crankshaft 10
Timing Gear 11
Lubrication System 11
Camshafts 12
Infinitely Variable Double VANOS 14
Lubrication System 16
Advantage of volumetric flow-controlled oil pump 17
Functional principle of volumetric flow-controlled oil pump 17
Pressure Relief Valve 17
Oil Filter 18
Oil Cooling 18
Oil Spray Nozzles 18
Oil spray nozzles for piston crown cooling 18
Oil spray nozzles for timing chain lubrication 18
Chain Tensioner 18
Non-return Valves in Cylinder Head 18
Crankcase Ventilation System 19
Crankcase breather, naturally-aspirated engine operation 19
Crankcase breather, turbocharged operation 21
Oil Separator 23
Belt Drive 25

cardiagn.com

Initial Print Date: 05/08 Revision Date: 03/11

Subject **Page**

Air Intake and Exhaust System 27
Air Intake System 29
Exhaust System 30
Turbocharging 31
Exhaust Turbocharger 31
Principle of Operation 32
Bi-turbocharging 32
Boost Pressure Control 32
Blow-off Control 33
Charge Air Cooling 35
Load Control 37
Controlled Variables 38
Limp-home Mode 38

Fuel Supply 40
High-precision Injection (HPI) 40
Design and function of high pressure pump 42
Hydraulics diagram of fuel system 44
Fuel Injectors 46
Injector adjustment 47
Injection Strategy 48
Operating mode: Catalytic Converter Heating 49
Injector control and adaptation 49
Injector adaptation 49
HPI Limp-home mode 50
HPI System Service 51
Fuel System Safety 51

Cooling System 52
Engine Cooling 53
Auxiliary Coolant Pump for Turbocharger Cooling 55
System Protection 55
Charge Air Cooling 56
Intercoolers 57
Electric Coolant Pump 57
Venting 57

cardiagn.com

Subject	Page

BLANK PAGE

cardiagn.com

N63 Engine

Model: All with N63 Engine

Production: From Start of Production (2008)

OBJECTIVES

After completion of this module you will be able to:

- Understand engine changes on the N63 as compared to the N62TU
- Understand basic engine assembly and disassembly procedures
- Understand basic engine service issues

cardiagn.com

Introduction

As the successor to the N62 engine, the N63 was developed based on the principles of "Efficient Dynamics". Efficient Dynamics combines driving enjoyment with efficiency which, in a new engine, is expressed in increased power output together with reduced fuel consumption.

One of the ways of achieving this objective is through downsizing. This means the same power output is achieved with reduced engine displacement or higher power output at the same engine displacement.

Both objectives apply to the N63 engine. Compared to the N62 engine, the power output has been boosted while decreasing the engine displacement.

In comparison, the N62TU has a displacement of 4.8 liters, while the new N63 engine displaces only 4.4 liters.

This is primarily achieved by technologies that already gave the N54 engine its legendary dynamics and outstanding efficiency: Bi-turbocharging in connection with high precision injection.

The N63 is the first engine world-wide to feature an optimized package, involving the integration of the turbocharger and the main near-engine catalytic converters in the “v-space”.

With the aim of achieving the demanding performance objectives in connection with optimum package and weight, the exhaust turbochargers and the catalytic converters have been placed in the v-space between the cylinder banks resulting in the intake and exhaust ports changing places.

With short pipe lengths and larger cross sections, this arrangement minimizes the pressure losses on the intake and exhaust side.

cardiagn.com

Engine Designations

Officially, the engine designation for the new BMW N63 engine is N63B44O0. The designation is broken down in the following:

Index	Explanation
N	BMW Group “New Generation” engine
6	8-cylinder engine
3	Gasoline, direct-injection
B	Gasoline engine
44	4.4 liter displacement
O	Upper output stage
0	New development

Engine Identification and Serial Number

The engine ID and sequential serial number are located on the passenger side of the engine behind the AC compressor mounting at the front of the crankcase.

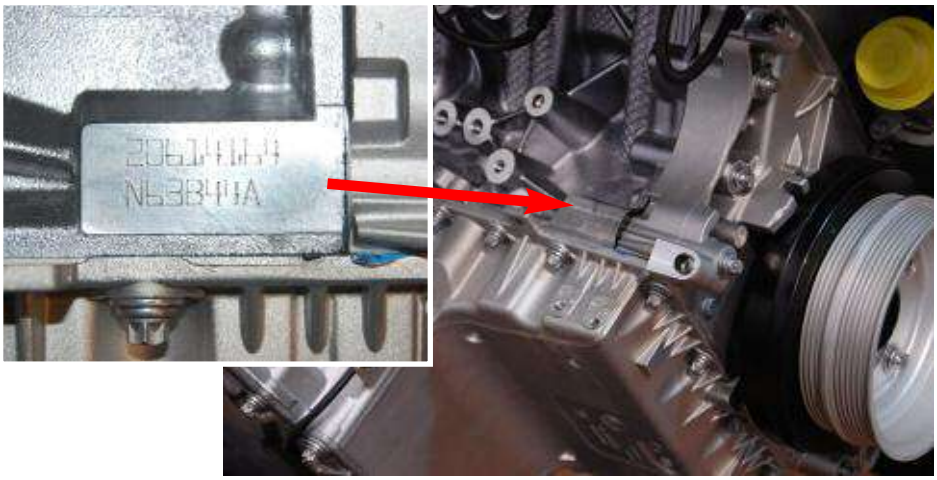

cardiagn.com

Engine Mechanical

Engine Housing Components

Crankcase

The crankcase of the N63 engine is a new design based on the closed-deck principle with lower-set side walls. It is made of an **aluminum alloy (Alusil)** with honed cylinder liners. Similar to the N62 engine, a double main bearing bolting with additional side wall mounting is used. There is now no coolant reservoir in this area due to the new arrangement of the turbochargers in the V-space.

cardiagn.com

Oil Pan

The 2-piece aluminum oil pan accommodates the oil filter housing and the front differential on all wheel drive vehicles. It is also important to note that the engine oil dipstick has been eliminated as on the New Generation 6-cylinder engines. Oil level monitoring is now carried out electronically as in those models.

cardiagn.com

Cylinder Head Covers

The cylinder head covers are made from aluminum alloy. There are accommodations for the ignition coils, camshaft sensors and the mounting for the high pressure fuel pump.

Cyclone separators are contained within the cylinder head covers as removable plastic components. There are no crankcase ventilation valves on the N63 engine, but there are externally mounted check valves similar to the N54.

Cylinder Head

The most distinctive new feature on the cylinder head of the N63 engine is the inverse arrangement of the intake and exhaust ports.

At the same time, optimized cross flow through the coolant jacket from the intake to exhaust side has been achieved.

cardiagn.com

The intake port features a trailing edge for creating more intensive charge movement. The fuel injectors and spark plugs are arranged transversely adjacent to each other in the center of the combustion chamber roof.

There is now only one non-return valve for the oil circuit integrated in the cylinder head. The two non-return valves that were used for VANOS are now integrated in the VANOS units.

Engine Internal Components

Crankshaft

To reduce weight, the diameter of the crankshaft's main bearings have been reduced from 70 mm to 65 mm. The crankshaft is a forged steel unit and contains an integrated sprocket for the oil pump.

The oil pump on the N63 engine is driven by the crankshaft on the flywheel side. The sprocket is built directly into the crankshaft.

cardiagn.com

The oil pump on the N63 engine is driven by the crankshaft on the flywheel side. The sprocket is built directly into the crankshaft.

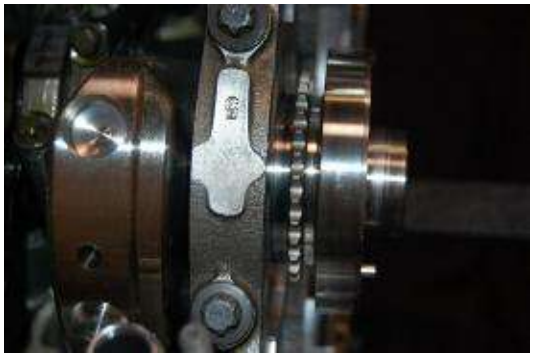

Timing Gear

A newly developed tooth-roller chain is used per cylinder bank to drive the camshafts. This chain combines the advantages of a tooth type chain and a roller chain, i.e. high resistance to wear and low running noise.

The chain tensioners, tensioning and slide rails are common parts for both cylinder banks. The oil spray nozzles are integrated in the chain tensioners.

The N63 engine is no longer locked at ignition TDC of the first cylinder but rather at 150° before ignition TDC of the first cylinder.

To block off the engine, a special tool is placed on the torsional vibration damper thus forming the reference for the plug mandrel to the crankcase.

Lubrication System

The lubrication system utilizes the same volumetric flow-controlled oil pump as seen on the six-cylinder N52/N54 engine. This type of oil pump offers the same reduction in fuel consumption as on past designs. The main difference on the N63 is that the oil pump is chain driven off of the rear of the engine rather than the front as on previous V-8 engines.

cardiagn.com

Camshafts

Recent advancements in engine technology have brought about new camshaft designs. Most modern BMW engines use some form of composite camshafts which are assembled from individual components rather than machined from an solid cast iron blank. This technology not only provides a reduction in manufacturing costs, but also a considerable weight savings.

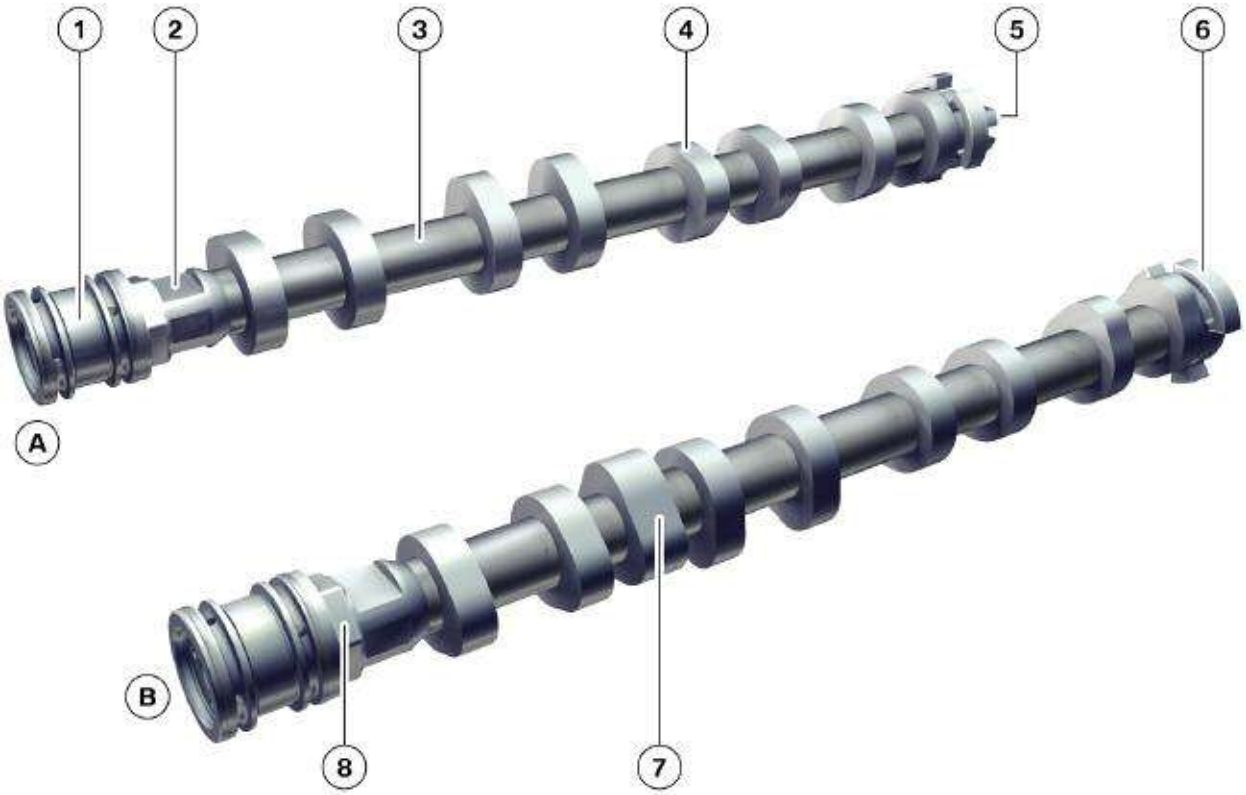

Index	Explanation	Index	Explanation
A	Intake camshaft	4	Cam lobe
B	Exhaust camshaft	5	Output flange for vacuum pump
1	Drive flange	6	Reference for camshaft sensor
2	Flat for special tool	7	3-point lobe for high pressure pump
3	Shaft tube	8	Flats for wrench

cardiagn.com

The N63 engine has **assembled camshafts** of the type as used on the M73 engine. All components are shrink-fitted on to the shaft.

The illustration shows the different components of the camshafts.

The drive flange, the wrench flats and the flats for the special tool are made from one single component. A three-point cam that drives the high pressure pump of the fuel system is additionally mounted on the exhaust camshafts. It is located after the first/fifth cylinder.

Another special feature of the N63 engine is that the exhaust camshafts for cylinders 2, 4, 7 and 8 produce a different valve lift curve than for cylinders 1, 3, 5 and 6. The exhaust valves of cylinders 2, 4, 7 and 8 open later, they have a shorter opening period and a smaller valve lift for even smoother engine operation.

cardiagn.com

Infinitely Variable Double VANOS

The charge cycle in the N63 engine is realized with four valves per cylinder, which are driven by two overhead camshafts.

The engine timing can be variably influenced by means of the two infinitely variable VANOS units.

The VANOS units used here have the following timing angles:

- Intake VANOS unit: 50° crankshaft angle
- Exhaust VANOS unit: 50° crankshaft angle

The VANOS units on the N63 engine differ from the VANOS units on the N62 engine. The function is identical but some components have been omitted and the VANOS unit has been optimized.

On the N63 engine, the individual vanes of the VANOS unit are no longer individual parts but rather they have been further developed to form an oscillating rotor (as on the N52 engine).

The torsion spring integrated in the N62 VANOS unit is now designed as a coil spring accommodated on the front of the N63 VANOS unit protected by a plastic cover.

cardiagn.com

Valve Timing Diagram

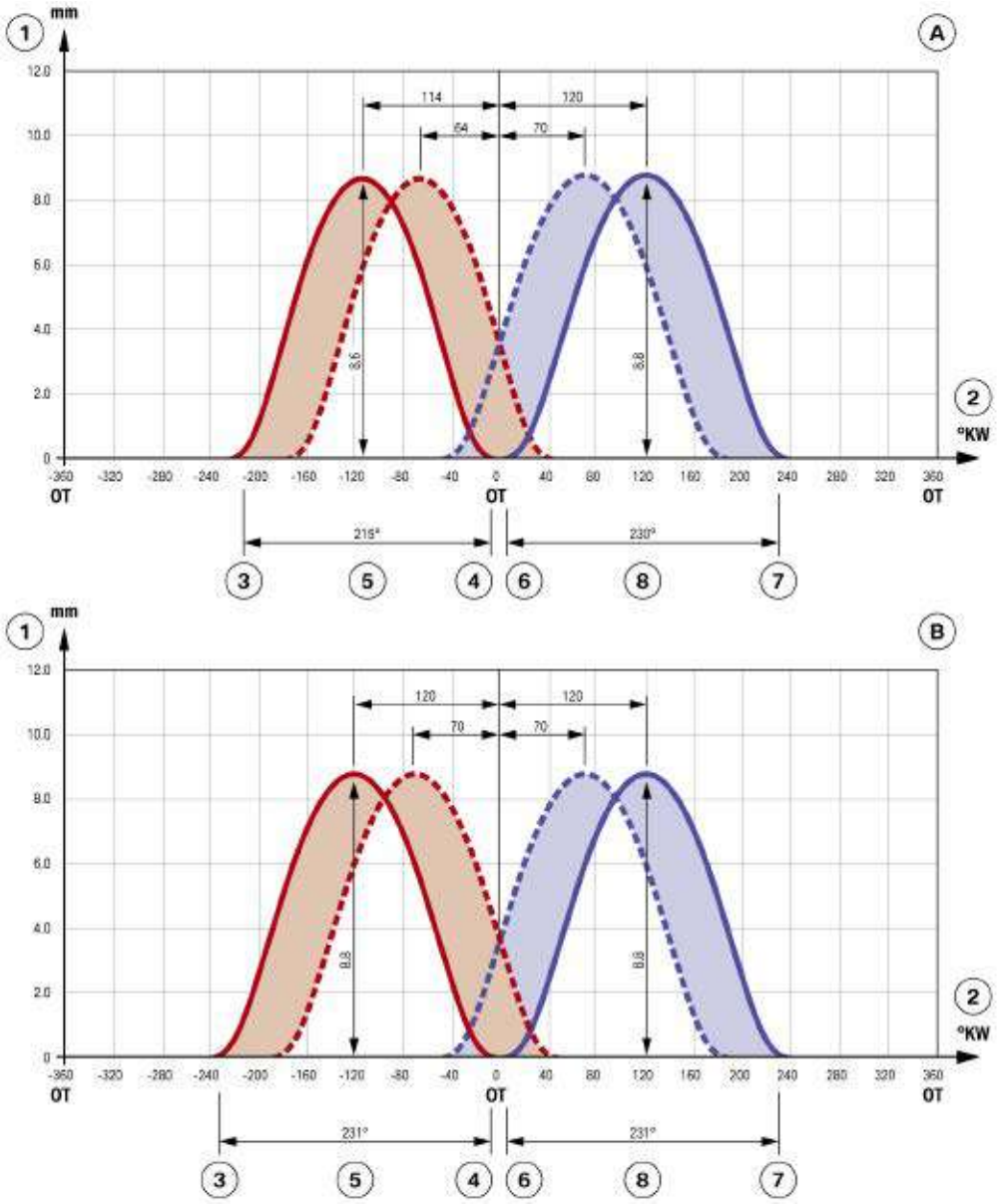

Index	Explanation	Index	Explanation
A	Cylinders 2,4,7 and 8	4	Exhaust valve closes
B	Cylinders 1,3,5 and 6	5	Exhaust valve opening period
1	Valve lift (mm)	6	Intake valve opens
2	Crankshaft angle (degrees)	7	Intake valve closes
3	Exhaust valve opens	8	Intake valve opening period

cardiagn.com

Lubrication System

In the same way as the 6-cylinder engines, the N63 engine is now equipped with a volumetric flow controlled oil pump. It is driven by the crankshaft on the flywheel side.

The oil pump is designed as a sliding-vane positive displacement pump with a control system that also operates in the same way as on the 6- cylinder engines.

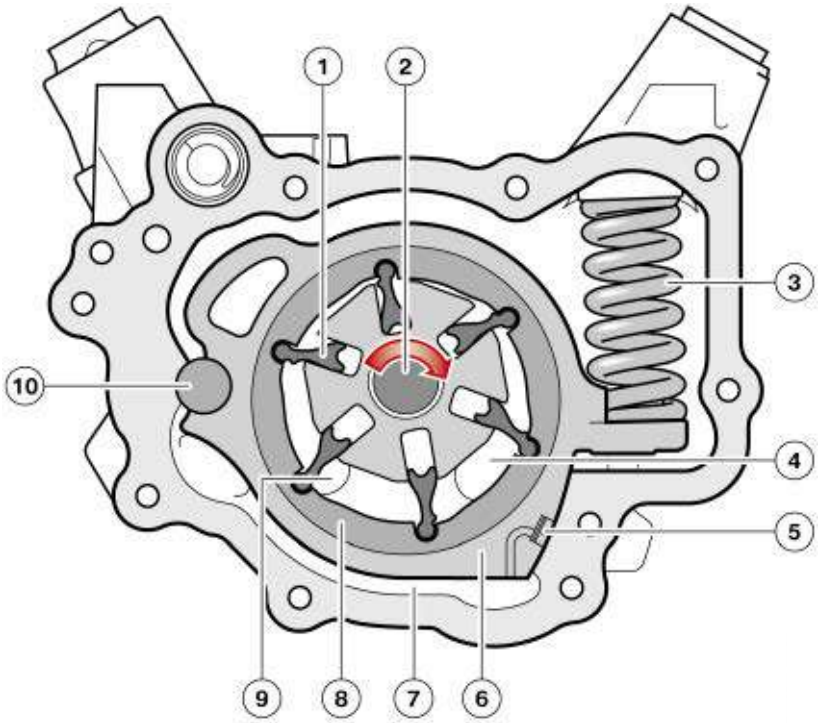

Index	Explanation	Index	Explanation
1	Vane	6	Slide
2	Pump shaft	7	Oil chamber
3	Compression spring	8	Rotor
4	Intake side	9	Pressure side
5	Sealing strip	10	Pivot pin

The difference is that the oil pressure does not act on the control piston but rather directly on the slide. The oil pressure that acts on the slide is tapped off downstream of the oil filter and cooler, i.e. the pressure prevailing in the system.

cardiagn.com

Advantage of volumetric flow-controlled oil pump

The oil pump uses a considerable proportion of the engine power output. VANOS requires a large volume of oil for the purpose of adjusting the camshaft angle. On the other hand, VANOS requires no oil flow for retaining the camshaft angle.

Consequently, the oil requirement depends on the extent of the adjustment operations. Conventional oil pumps produce the oil pressure necessary for the largest possible oil flow rate that can occur in the engine. In many operating situations, this represents unnecessary energy consumption through the oil pump and additional wear of the oil.

The volumetric flow-controlled oil pump delivers only as much oil as is necessary under the respective engine operating conditions. No surplus quantities of oil are delivered in low-load operating ranges, thus reducing fuel consumption and oil wear and tear.

Functional principle of volumetric flow-controlled oil pump

The pump is designed as a sliding-vane positive displacement pump. In delivery mode, the pump shaft is positioned off-center in the housing and the vanes are displaced radially during rotation.

As a result, the vanes form chambers of differing volume. The oil is drawn in as the volume increases and, conversely, expelled into the oil channels as the volume decreases.

The oil pressure in the system (downstream of the oil filter and oil cooler) acts on the slide against the force of a compression spring in the control oil chamber. The slide element can rotate about a pivot pin.

The pressure increases in the system when less oil is required by the lubricating system than the pump delivers. As a result, the pressure in the control chamber also increases thus turning the slide so that the pump shaft is located more in the center of the slide, thus reducing the change in volume and therefore the delivered quantity.

If the oil required by the engine increases, for example, VANOS control intervention, the pressure in the lubricating system drops and is therefore also reduced in the control oil chamber.

The compression spring moves the slide such that the pump shaft is off-center, thus increasing the change in volume and therefore the delivered quantity.

Pressure Relief Valve

The pressure relief valve is integrated in the oil pump. Pressure upstream of the filter is applied to the valve which opens at a pressure of approximately 18 bar. When opened, the valve allows surplus oil to flow directly into the oil pan.

cardiagn.com

Oil Filter

The N63 engine is equipped with the standard full flow oil filter. It is screwed into the oil pan from below. It also features an integrated filter bypass valve. The valve opens when the filter is dirty and ensures that the lubrication points still receive engine oil (albeit unfiltered).

No drain valve is fitted due to its installation position. A drain plug in the oil filter cover makes it possible to drain the oil out of the filter housing before the oil filter cover is opened.

Oil Cooling

The oil is cooled via an oil-to-air heat exchanger. This separate oil cooler is located to the right of the cooling module. A thermostat only allows the oil to flow through the oil cooler when a defined oil temperature has been reached, thus ensuring the engine oil heats up at a rapid rate.

Oil Spray Nozzles

Oil spray nozzles are used at points that cannot be reached by oil channels. On the N63 engine, these are the standard oil spray nozzles for piston crown cooling and the oil spray nozzles for lubricating the timing chain.

Oil spray nozzles for piston crown cooling

The N63 engine has four double oil spray nozzles for cooling the piston crowns. Each oil spray nozzle cools an opposing pair of cylinders.

A piston cooling valve is integrated in the oil spray nozzle. This valve ensures that the oil circuit is not drained via the oil spray nozzles while the engine is not running.

Oil spray nozzles for timing chain lubrication

The oil spray nozzles for lubricating the timing chains are integrated in the chain tensioners of the two cylinder banks. They spray the engine oil directly on to the timing chains. A throttle in the oil spray nozzle limits the oil output.

Chain Tensioner

The N63 engine is equipped with one chain tensioner per cylinder bank. It is a hydraulic chain tensioner that acts on a tensioning rail.

Chain tensioners always act on the no-load side of the chain, i.e. the slack side.

Non-return Valves in Cylinder Head

Non-return valves that prevent the oil channels in the cylinder head draining while the engine is not running are normally installed in the cylinder head.

There is only one non-return valve in the cylinder head of the N63 engine. The nonreturn valves for VANOS units are now directly integrated in the solenoid valves.

cardiagn.com

Crankcase Ventilation System

The crankcase breather on the N63 engine operates in accordance with the same principle as on the N54 engine. In the case of the N63 engine, each cylinder bank has its own crankcase breather.

The crankcase ventilation on the N63 operates in two modes, similar to the N54. One mode is for turbocharged operation and the other is for “naturally aspirated mode” which is usually under deceleration.

Crankcase breather, naturally-aspirated engine operation
Because of its exhaust-gas turbocharging, in the same way as the N54 engine, the N63 engine is equipped with a special crankcase breather.

The standard function can only be utilized while there is a vacuum in the intake manifold, i.e. in naturally-aspirated engine operation.

As soon as the pressure in the intake manifold is increased by turbocharging, the blow-by gasses can no longer be introduced by way of this route. A non-return valve is incorporated in the channel to the intake manifold to prevent the risk of boost pressure being introduced into the crankcase.

There is a risk, under conditions of high vacuum, that oil can be drawn in through the crankcase breather into the intake manifold. So, this area of the crankcase breather must be provided with a pressure limiting facility.

This is realized in the N63 engine with a restrictor, which limits the throughflow and thus also the pressure level in the crankcase breather. As the illustration shows, ventilation takes place during naturally aspirated operation via an external line from the cylinder head cover to the intake manifold.

The throttle for limiting pressure on the N63 is integrated in the non-return valve to the intake manifold.

cardiagn.com

Naturally Aspirated Mode

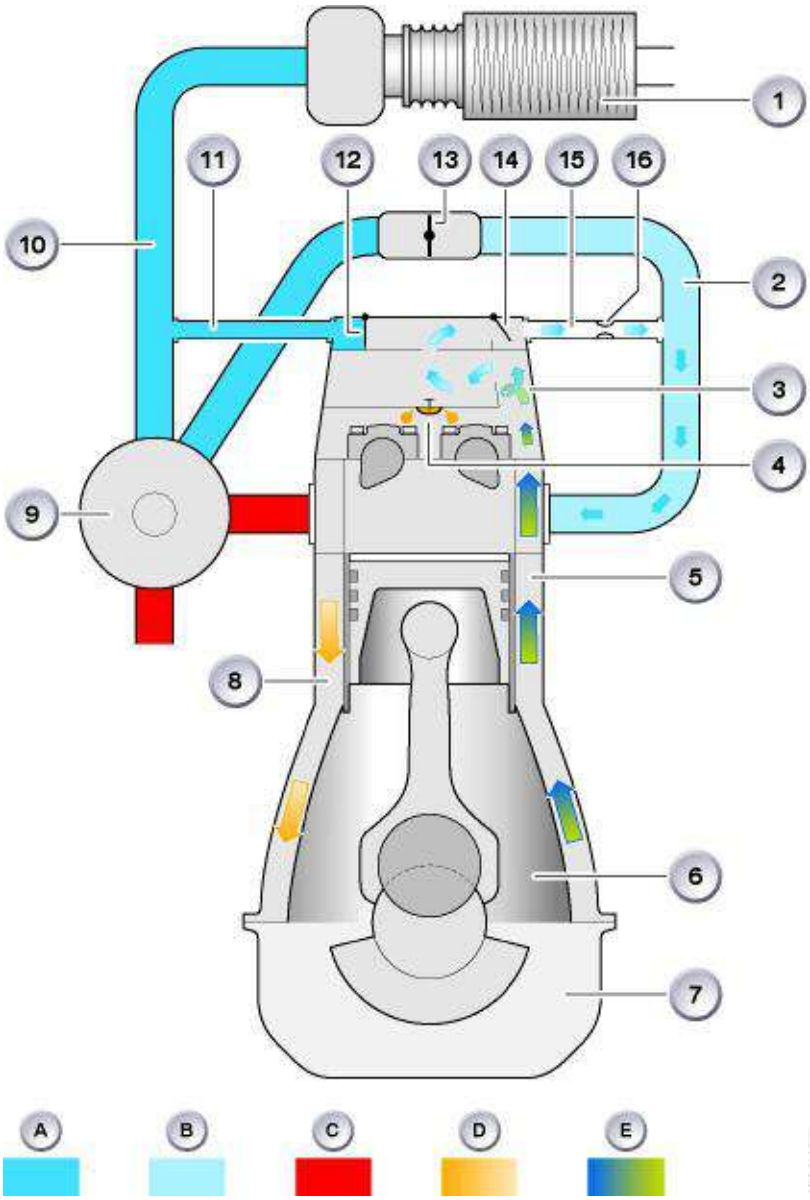

Index	Explanation
A	Overpressure
B	Low Pressure (Vacuum)
C	Exhaust gas
D	Liquid oil
E	Blow-by gases (Crankcase vapors)
1	Air cleaner
2	Intake manifold
3	Oil separators
4	Oil discharge valve
5	Venting channel
6	Crankshaft cavity
7	Oil sump
8	Oil return channel
9	Turbocharger
10	Clean air pipe
11	Line to clean air pipe
12	Check valve (non-return) to intake
13	Throttle valve
14	Check valve to clean air pipe
15	Channel to intake manifold
16	Pressure restrictor

cardiagn.com

Crankcase breather, turbocharged operation

In turbocharged mode, the pressure in the intake manifold increases and thus closes the non-return valve. Because there is a vacuum in the clean-air pipe in this operating range, it opens the non-return valve to the clean-air pipe and the blow-by gasses are directed via the turbocharger compressor and the intercooler into the intake manifold.

Boost Mode

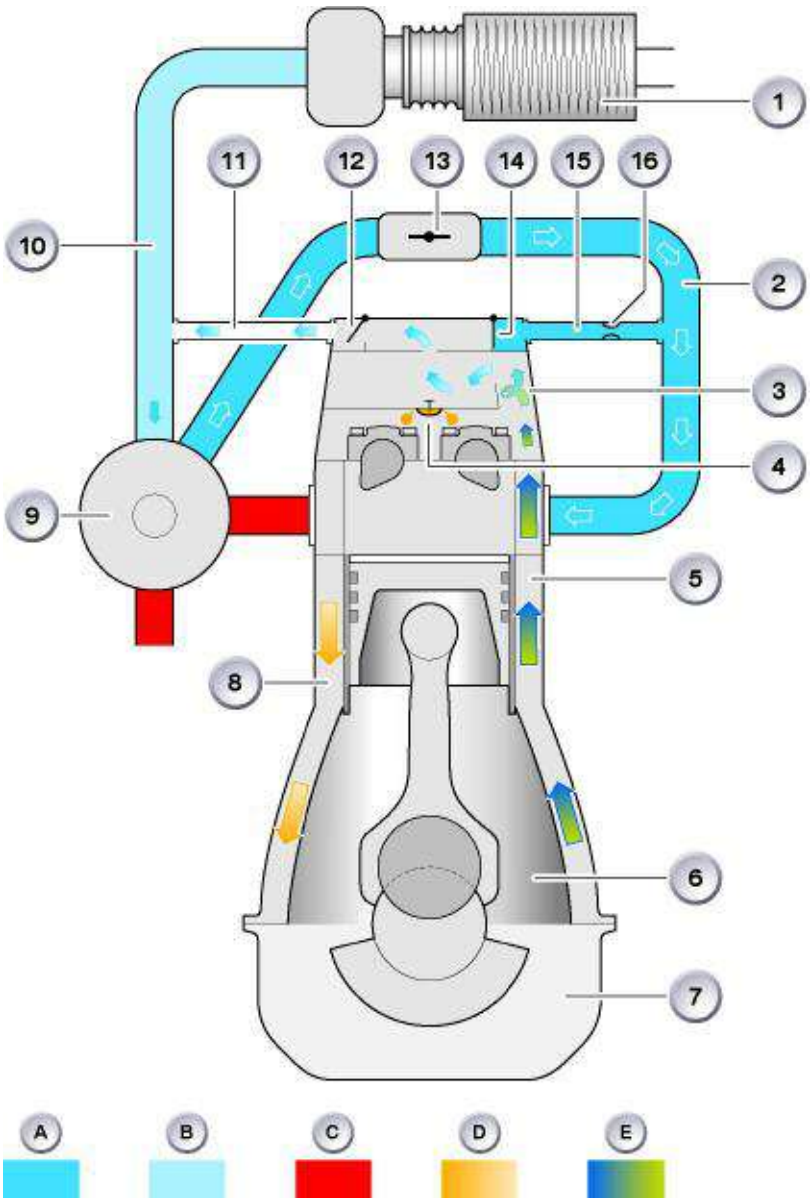

Index	Explanation
A	Overpressure
B	Low Pressure (Vacuum)
C	Exhaust gas
D	Liquid oil
E	Blow-by gases (Crankcase vapors)
1	Air cleaner
2	Intake manifold
3	Oil separators
4	Oil discharge valve
5	Venting channel
6	Crankshaft cavity
7	Oil sump
8	Oil return channel
9	Turbocharger
10	Clean air pipe
11	Line to clean air pipe
12	Check valve (non-return) to intake
13	Throttle valve
14	Check valve to clean air pipe
15	Channel to intake manifold
16	Pressure restrictor

cardiagn.com

Check Valves

Index	Explanation	Index	Explanation
A	Cleaned blow-by gas	2	Intake manifold
B	Ventilation, naturally aspirated operation	3	Clean-air pipe
C	Ventilation, turbocharged operation	4	Check valve to intake
1	Oil separator	5	Check valve to clean air pipe

cardiagn.com

Oil Separator

Labyrinth and cyclone oil separators are used on the N63 engine. One labyrinth separator and four cyclone separators are integrated in the oil separator housing of each cylinder bank, however, only three are used at present.

The fourth is reserved for further developments. The oil mist drawn out of crankcase is routed through the labyrinth. This serves as the first oil separation stage as the oil collects on the walls of the labyrinth and flows off. The further flow of blow-by-gas is made to swirl in the cyclones.

As a result of the centrifugal forces, the heavier oil settles on the cyclone walls and from there drips into the oil drain. The lighter blow-by gas is drawn out from the middle of the cyclone. The cleaned blow-by gas is then fed to the air intake system.

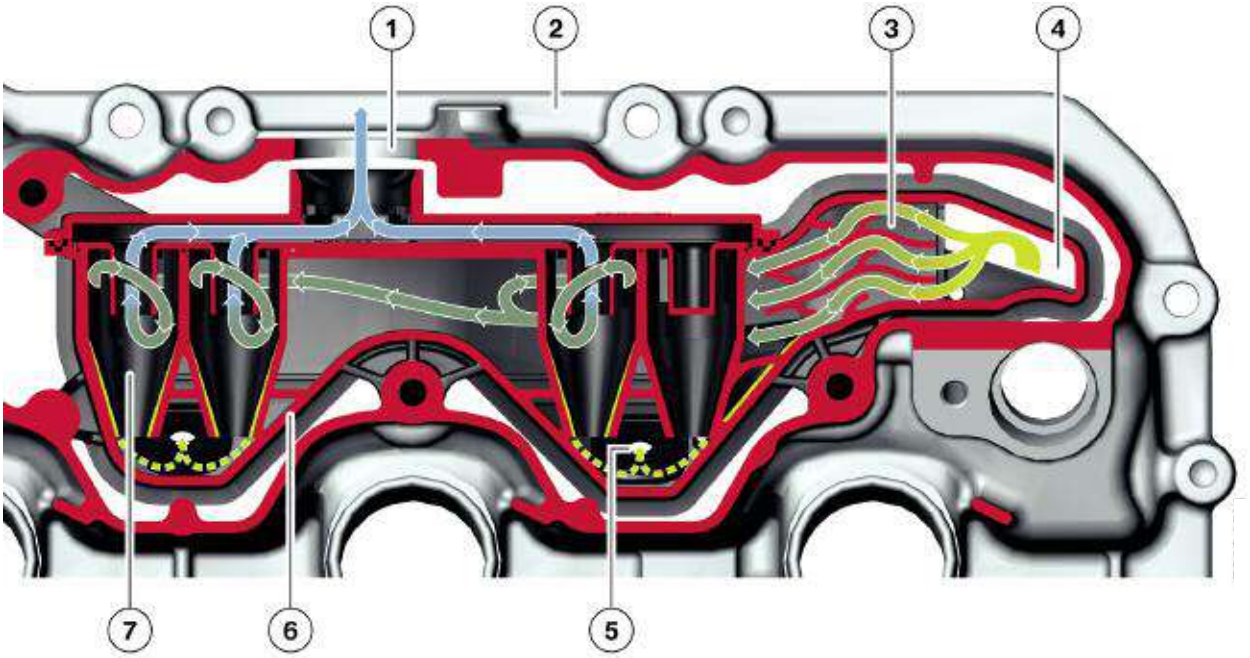

Index	Explanation	Index	Explanation
1	Channel to air intake	5	Oil return
2	Cylinder head cover	6	Oil separator housing
3	Labyrinth	7	Cyclone
4	Ventilation duct from cylinder head		

cardiagn.com

If the exhaust system produces blue smoke, it is necessary to check whether the engine is also drawing oil into the combustion chamber through the crankcase breather, which suggest that there is a fault in the area of the crankcase breather. A clear sign of a problem is an oiled up clean-air pipe.

cardiagn.com

Belt Drive

The N63 engine is equipped as standard with a double belt drive. The main belt drive features a mechanical tensioning pulley that provides the necessary tension in the poly-V-belt.

The A/C compressor is driven by a ELAST drive belt which is mounted and tensioned in a new way.

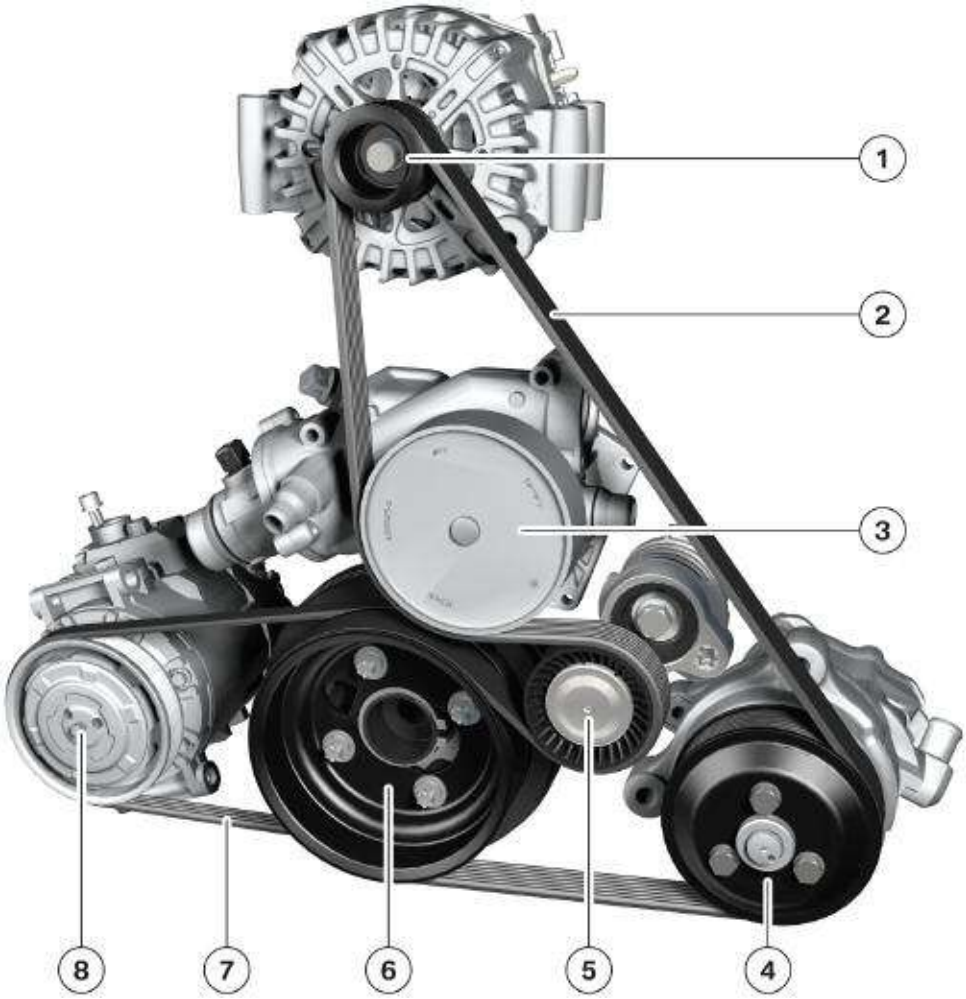

Index	Explanation	Index	Explanation
1	Alternator	5	Tensioning pulley
2	Poly V-belt	6	Torsional vibration damper
3	Coolant pump	7	ELAST belt (AC)
4	Power steering pump	8	A/C Compressor

cardiagn.com

The belt pulley on the torsional vibration damper can be shifted in a defined position in the direction of the A/C compressor. This makes it possible to easily install the ELAST drive belt without the need for special tools.

This is made possible by an eccentric slot in the belt pulley, which allows the crankshaft to be shifted in radial direction after the four mounting screws holding the belt pulley have been removed.

The tension in the ELAST drive belt pulls the belt pulley back into the central position over the crankshaft when the engine is now turned by 180°.

The bolts can then be re-installed to complete the belt change.

Index	Explanation
A	Mounting position for ELAST drive belt
B	Turning torsional vibration damper for tensioning belt
C	Normal position

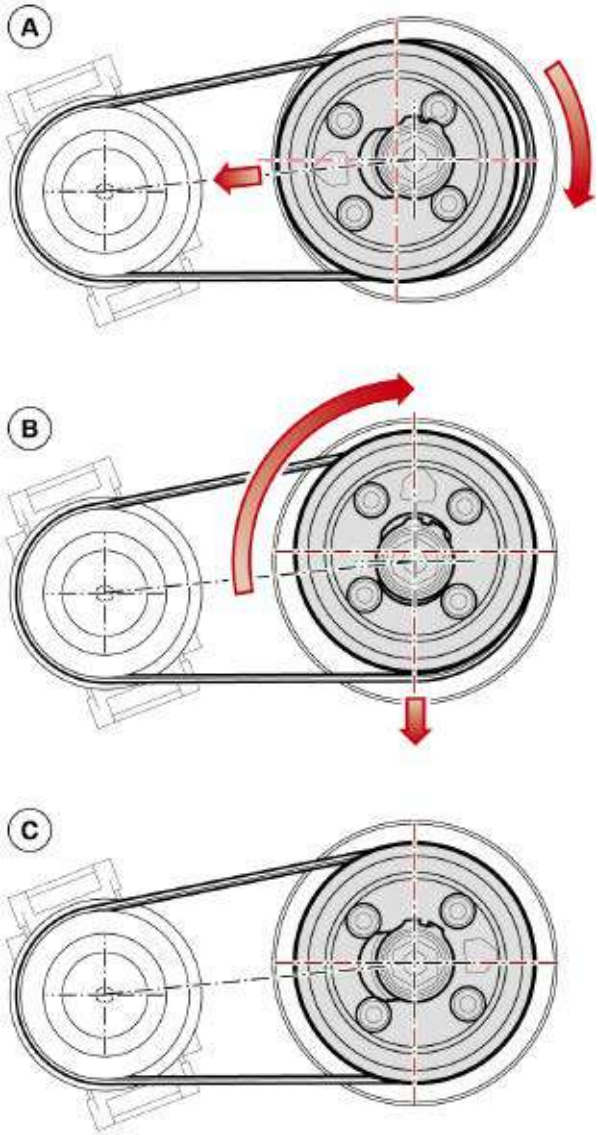

cardiagn.com

Air Intake and Exhaust System

The main change to the air intake and exhaust system of the N63 engine is the interchanged positions of the intake and exhaust sides.

Consequently, the exhaust manifolds and turbochargers as well as the catalytic converters are located in the V-space of the engine.

This arrangement makes the N63 engine very compact despite the turbocharging. Another new feature is indirect charge air cooling with intercoolers mounted on the engine.

cardiagn.com

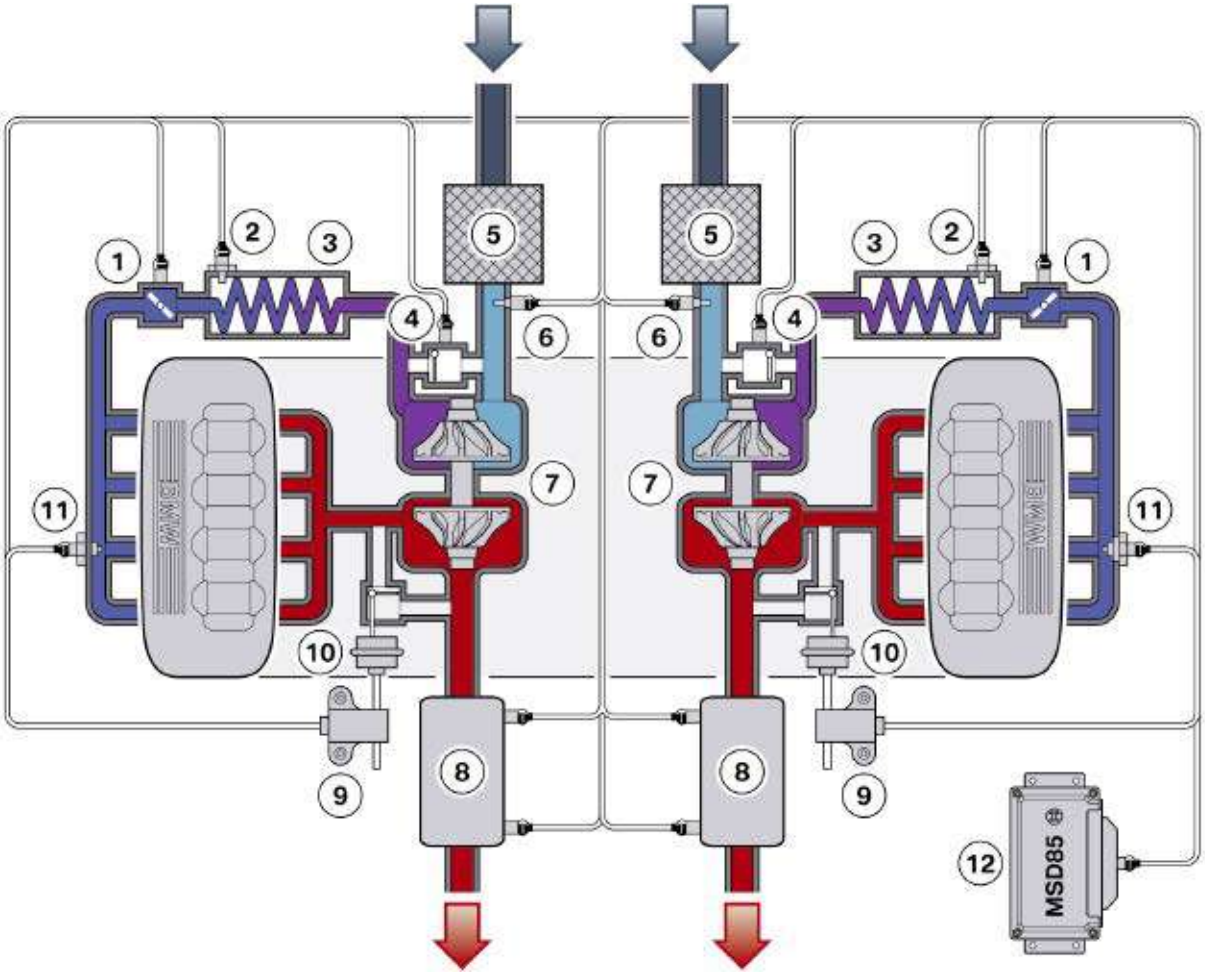

Index	Explanation	Index	Explanation
1	Throttle valve	7	Exhaust turbocharger
2	Charge air temperature and pressure sensor	8	Catalytic converter
3	Intercooler	9	Electro-pneumatic pressure converter (EPDW)
4	Diverter valve	10	Watergate valve
5	Intake silencer	11	Intake manifold pressure sensor
6	Hot-film air mass meter	12	Digital Motor Electronics (DME)

cardiagn.com

Air Intake System

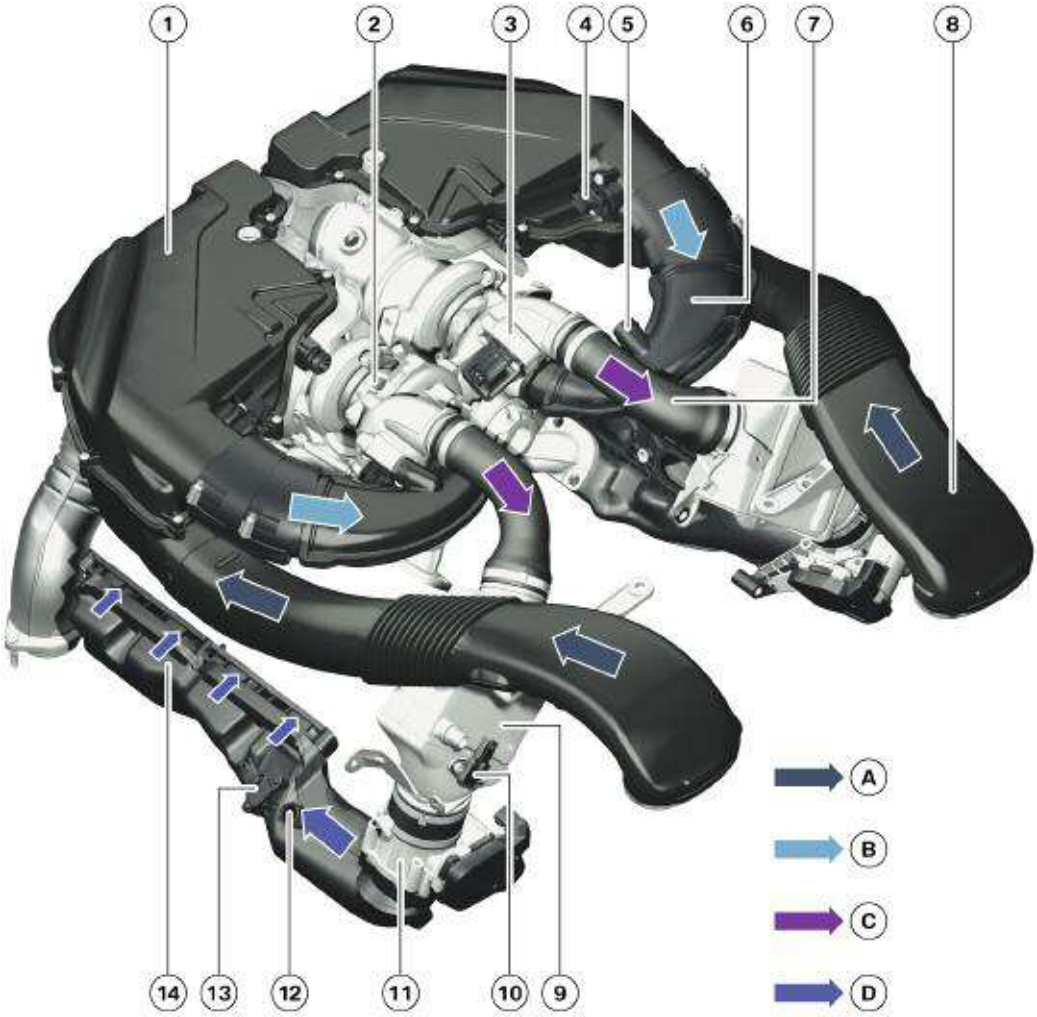

Index	Explanation	Index	Explanation
1	Intake silencer	8	Unfiltered air pipe
2	Exhaust turbocharger	9	Intercooler
3	Diverter valve	10	Charge air temperature and pressure sensor
4	Hot-film air mass meter	11	Throttle valve
5	Crankcase breather connection for turbocharged engine operation	12	Crankcase breather connection for naturally aspirated engine operation
6	Clean air pipe	13	Intake manifold pressure sensor
7	Charge air pipe	14	Intake manifold

cardiagn.com

Exhaust System

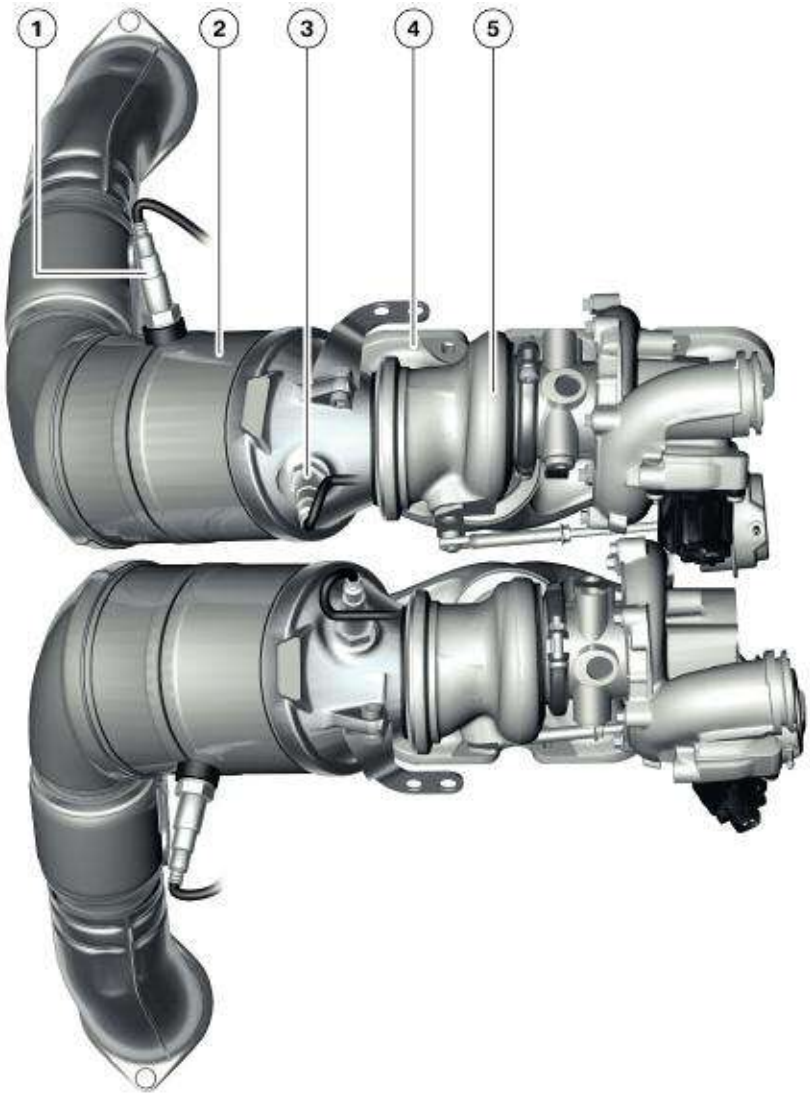

Index	Explanation	Index	Explanation
1	Oxygen sensor (LSF4.2 after catalytic converter)	4	Exhaust manifold
2	Catalytic converter	5	Exhaust turbocharger
3	Oxygen sensor (LSU ADV before catalytic converter)		

cardiagn.com

Turbocharging

The turbocharging principle of the N63 engine is very similar to that of the N54 engine. Two relatively small, parallel-connected exhaust turbochargers ensure rapid response already at low engine speeds.

The boost pressure is controlled by means of wastegate valves. Diverter valves are also used.

Exhaust Turbocharger

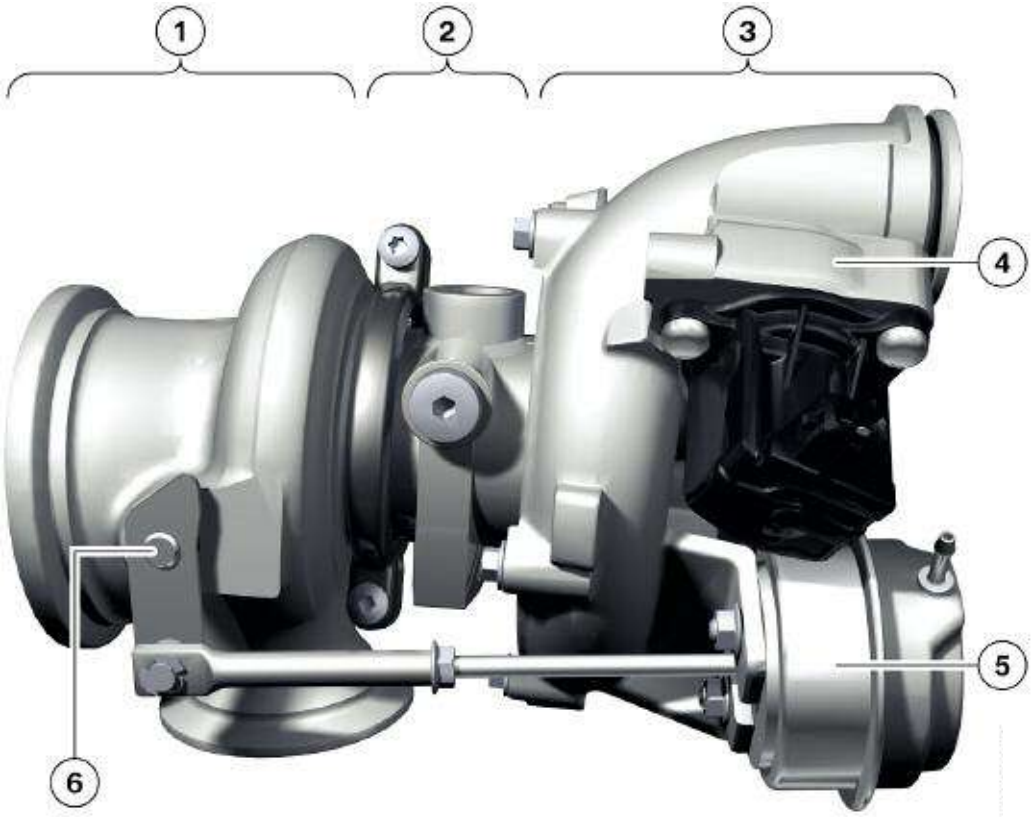

Index	Explanation	Index	Explanation
1	Turbine	4	Diverter valve
2	Bearing Pedestal	5	Vacuum unit
3	Compressor	6	Wastegate valve

cardiagn.com

Principle of Operation

The turbocharger is driven by the engine's exhaust gasses, i.e. exhaust gasses under pressure are routed by the turbocharger
turbine and in this way delivers the motive force to the compressor, which rotates on the same shaft. It is here that the induction air is precompressed in such a way that a higher air mass is admitted into the engine's combustion chamber.

In this way, it is possible to inject and combust a greater quantity of fuel, which increases the engine's power output and torque.
The turbine and the compressor can rotate at speeds of up to 175,000 rpm. The exhaust inlet temperature can reach a maximum of 950°C.

Because of these high temperatures, the turbochargers of the N63 engine are not only connected with the engine oil system but also integrated in the engine coolant circuit.

In connection with the auxiliary electric coolant pump on the N63 engine, even after the engine has been switched off, it is possible to dissipate the residual heat from the turbochargers, thus preventing the lubricating oil in the bearing housing from overheating.

Bi-turbocharging

Great importance is attached to turbocharger response in the N63 engine. A delayed response to the driver's command, i.e. the accelerator-pedal position, is not acceptable.

The driver therefore must not experience any so-called "turbo lag". This requirement is met in the N63 engine with two relatively small turbochargers, which are connected in parallel. Each cylinder bank drives one exhaust turbocharger.

The advantage of smaller turbochargers lies in the fact that, as the turbocharger runs up to speed, the lower moment of inertia of the turbine causes fewer masses to be accelerated, thus allowing the compressor to attain a higher boost pressure in a shorter amount of time.

Boost Pressure Control

The boost pressure of the turbochargers is directly dependent on the flow of exhaust gas which reaches the turbocharger turbines. Both the velocity and the mass of the exhaust gas flow are directly dependent on engine speed and engine load. The engine management system uses wastegate valves to control the boost pressure.

These valves are operated by vacuum units, which are controlled by electropneumatic pressure converters (EPDW) via the engine management system.

The vacuum is generated by the permanently driven vacuum pump and stored in a pressure accumulator. The system is designed to ensure that these loads/consumers do not have a negative influence on the brake boost function.

The flow of exhaust gas to the turbine wheel can be influenced with the wastegate valves. When the boost pressure has reached its desired level, the wastegate valve begins to open and direct part of the exhaust-gas flow past the turbine wheel.

cardiagn.com

This prevents the turbine from further increasing the speed of the compressor. This control option allows the system to respond to various operating situations.

In the idle phase, the wastegate valves of both turbochargers are closed. This enables the full exhaust-gas flow available to be
utilized to speed up the compressor already at these low engine speeds. When power is then demanded from the engine, the compressor can deliver the required boost pressure without any noticeable time lag.

In the full-load situation, the boost pressure is maintained at a consistently high level when the maximum permissible torque is reached by a partial opening of the wastegate valves. In this way, the compressors are only ever induced to rotate at a speed which is called for by the operating situation.

Opening of the wastegate valves takes drive energy from, the turbine thus limiting the charger speed and preventing overspeed. In addition, there is no further increase in boost pressure, thus benefiting fuel consumption.

At full-load the N63 engine operates at an overpressure of up to 0.8 bar in the intake manifold.

Blow-off Control
The diverter valves in the N63 engine reduce unwanted peaks in boost pressure which can occur when the throttle valve closes quickly.

They therefore have an important function with regard to engine acoustics and help to protect the turbocharger components.

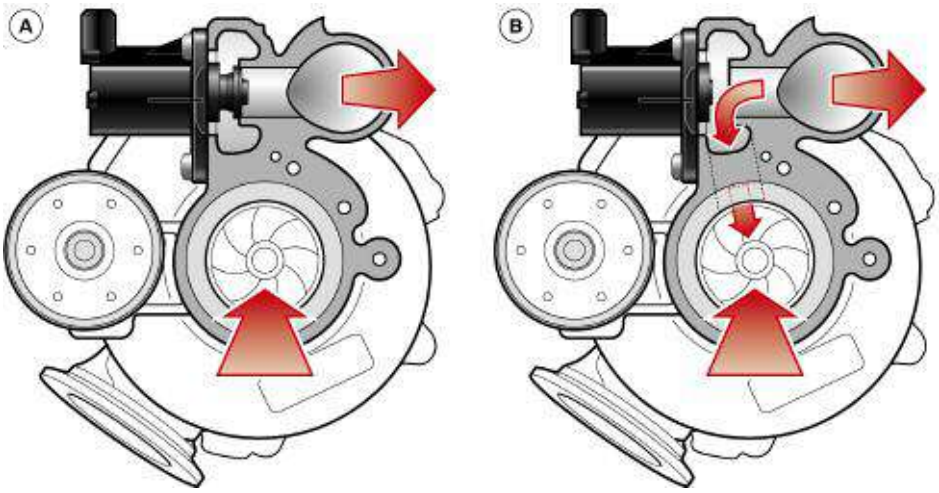

Index	Explanation	Index	Explanation
1	Diverter valve, closed	2	Diverter valve, open

cardiagn.com

A vacuum is generated in the intake manifold when the throttle valve is closed at high engine speeds. This leads to a build-up of high dynamic pressure after the compressor which cannot escape because the route to the intake manifold is blocked.

This leads to a "pumping up" of the turbocharger. This means that

- a clearly noticeable, disruptive pumping noise can be heard,
- and this pumping noise is accompanied by a component-damaging load being exerted on the turbocharger, since high-frequency pressure waves exert axial load on the turbocharger bearings.

The diverter valves are electrically operated valves. When the throttle valve closes, the boost pressure (upstream of the throttle valve) and its increase are compared with stored target values.

The diverter valves are opened if the actual values exceed the target by a certain value. As a result, the boost pressure is diverted to the intake side of the compressor.

This procedure prevents the disruptive and component-damaging pumping effect from occurring.

Diverter valve

cardiagn.com

Charge Air Cooling

Indirect charge air cooling is used for the first time on the N63 engine. The charge air is not routed directly to an air-to-air heat exchanger.

The charge air is cooled by means of an air-to-coolant heat exchanger. The N63 engine therefore features a separate self contained low-temperature coolant circuit.

Cooling the charge air serves to increase power output as well as reduce fuel consumption. The charge air heated in the turbocharger by its component temperature and by compression is cooled in the intercooler by up to 80°C.

This increases the density of the charge air, which in turn improves the charge in the combustion chamber. This results in a lower level of required boost pressure. The risk of knock is also reduced and the engine operates with improved efficiency.

Indirect charge air cooling has the advantage of requiring little space as the system can be mounted directly on the engine. Due to the near-engine installation position, the distinctly shorter pipe length required for charge air routing also have a positive effect.

cardiagn.com

In this way, pressure loss has been substantially reduced, thus improving power yield and engine response.

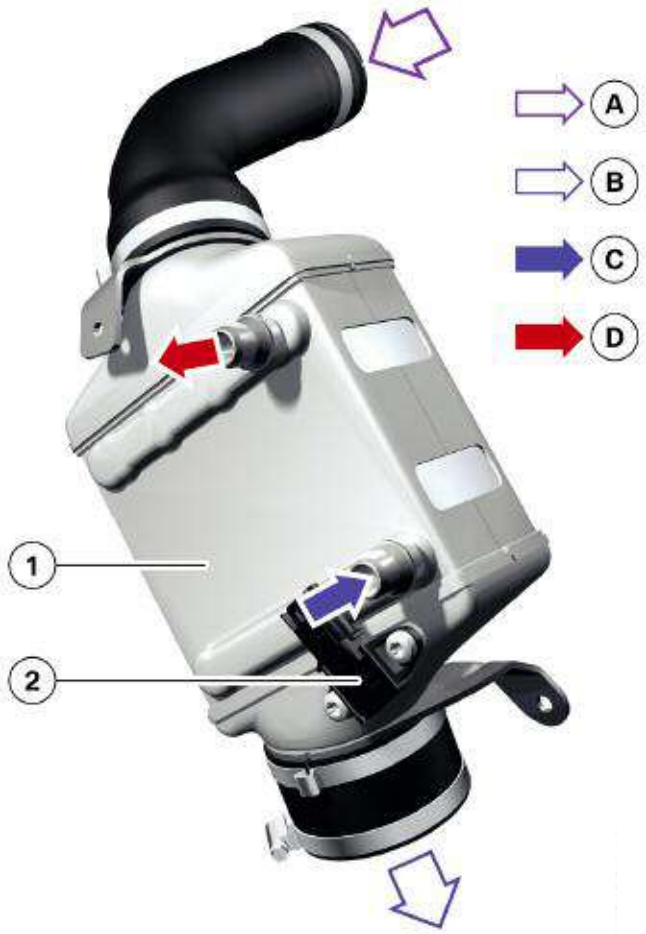

Index	Explanation	Index	Explanation
A	Hot charge air	D	Hot coolant
B	Cooled charge air	1	Intercooler
C	Cooled coolant	2	Charge air pressure/temperature sensor

cardiagn.com

Load Control

Load control of the N63 engine is realized by means of the throttle valve and the wastegate valves.

The throttle valve is the primary component in this process. The wastegate valves are actuated to bring about a fine tuning of the boost pressure. At full load the throttle valve is completely open and load control is undertaken by the wastegate valves.

The load control graphic shows that the wastegate valves are integrated in load control in all operating situations of the N63 engine on the basis of characteristic map control.

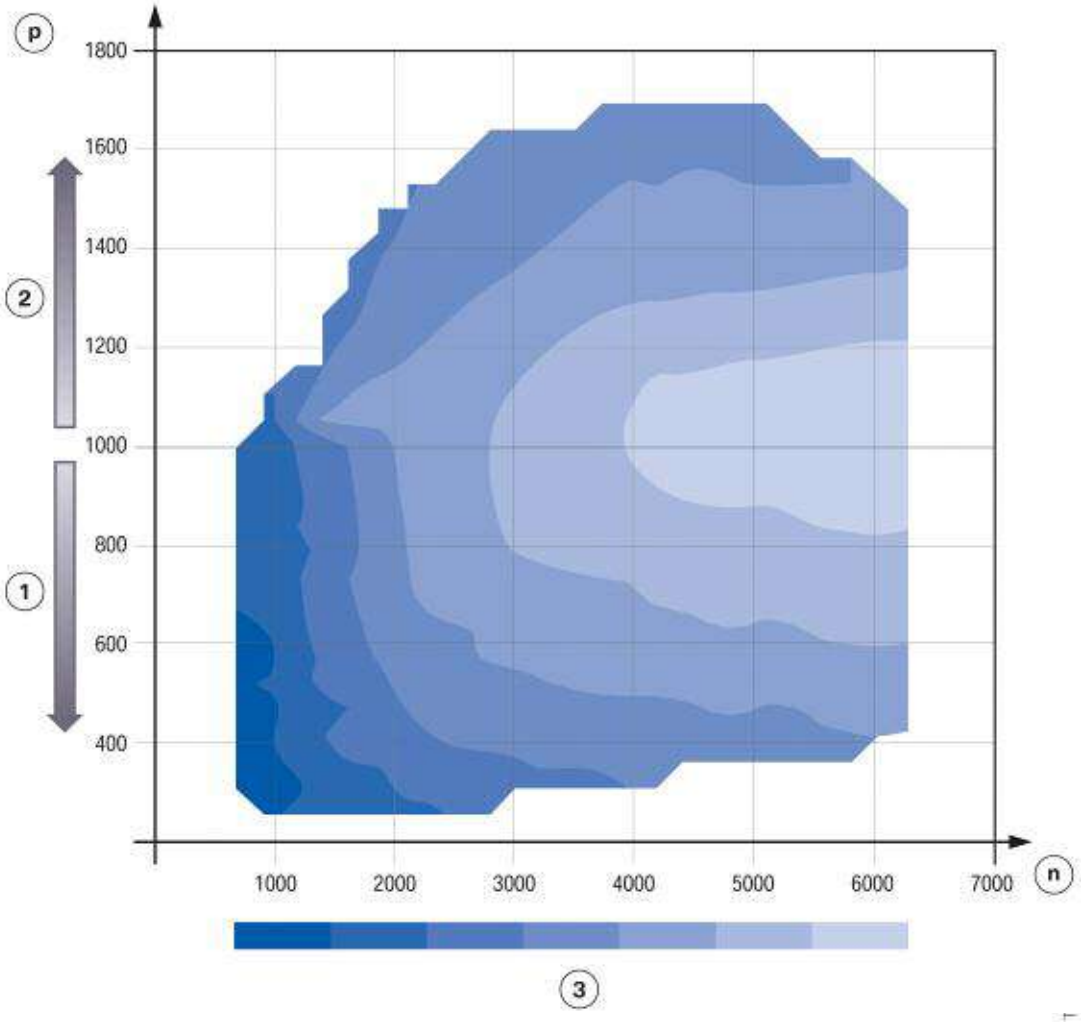

Index	Explanation	Index	Explanation
n	Engine speed in RPM	2	Turbocharged operation
p	Absolute pressure in intake manifold (mbar)	3	Dark = wastegate closed Light = wastegate open
1	Naturally aspirated operation		

cardiagn.com

Controlled Variables

Among other things, the following variables influence boost pressure control in the N63 engine:

- Intake-air temperature
- Engine speed
- Throttle-valve position
- Ambient pressure
- Intake-manifold pressure
- Pressure before the throttle valve (reference variable)

The electropneumatic pressure transducers are activated by the engine control unit on the basis of these variables.

The result of this activation can be checked from the boost pressure achieved, which is measured before the throttle valve.

There follows a comparison of the boost pressure achieved with the setpoint data from the characteristic map, which can, if necessary, give rise to an activation correction.

The system therefore controls and monitors itself during operation.

Limp-home Mode

In the event during operation of malfunctions, implausible values or failure of any of the sensors involved in turbocharger control, activation of the wastegate valves is shut down and the valve flaps are thus fully opened. Turbocharging ceases at this point.

The list below sets out those components or functional groups of the N63 engine in which a failure, a malfunction or implausible values result in boost pressure control being deactivated.

The driver is alerted to a fault of this type by the emission warning lamp.

- High pressure fuel system
- Inlet VANOS
- Exhaust VANOS
- Crankshaft sensor
- Camshaft sensor
- Boost-pressure sensor
- Knock sensors
- Intake-air temperature sensor

cardiagn.com

One principle of vehicle repair is particularly important in this respect:

When diagnosing any fault, particularly with a turbocharged engine, it is important to focus on causes rather than the effects.

With regard to the diagnosis and subsequent repair of turbocharging components, it is important to ensure that they are also actually identified as defective components with the diagnostic technology available. It is always vital to ensure that the cause of the fault is determined and rectified and that if necessary work is not carried out on symptoms of fault consequences.

Thus, for instance, a leaking flange on the intercooler can have far-reaching consequences.

The N63 engine also is governed by three golden rules of procedure:

1. It is important to not immediately blame the turbocharger for all power related complaints. Turbochargers are frequently mis-diagnosed and unnecessarily replaced. If blue smoke emerges from the exhaust system, check whether the air cleaner is contaminated or the engine is consuming too much oil because of wear. If the turbocharger is running too loud, inspect all the connections on the turbocharger pressure side. If black smoke or a loss of power is detected, in this case check the engine and the connecting pipes first.
2. Main causes of turbocharger damage:
   - Insufficient lubrication and consequently bearing failure.
   - Foreign bodies damage the turbine and impeller. The resulting imbalance will reduce efficiency and may cause rotor damage.
   - Contaminated lube oil causes scoring on shaft journals and bearings. Elements entering the turbocharger system from the out side such as sand, dirt, screws and the like will be trapped by a filter before the compressor.

   Service the filters at regular intervals (service intervals).
3. Do not make any alterations to the turbocharger.

   Never attempt to tamper with or alter the boost-pressure control linkage. If the turbocharger operates at higher boost pressures than permitted by the engine manufacturer, the engine may run hot and pistons, cylinder heads or engine bearings may fail, or the safety function of the engine electronics may respond and activate the engine's limp-home program.

cardiagn.com

Fuel Supply

High-precision Injection (HPI)

The fuel is delivered from the fuel tank by the electric fuel pump via the feed line at an admission pressure of 5 bar to the high pressure pump.

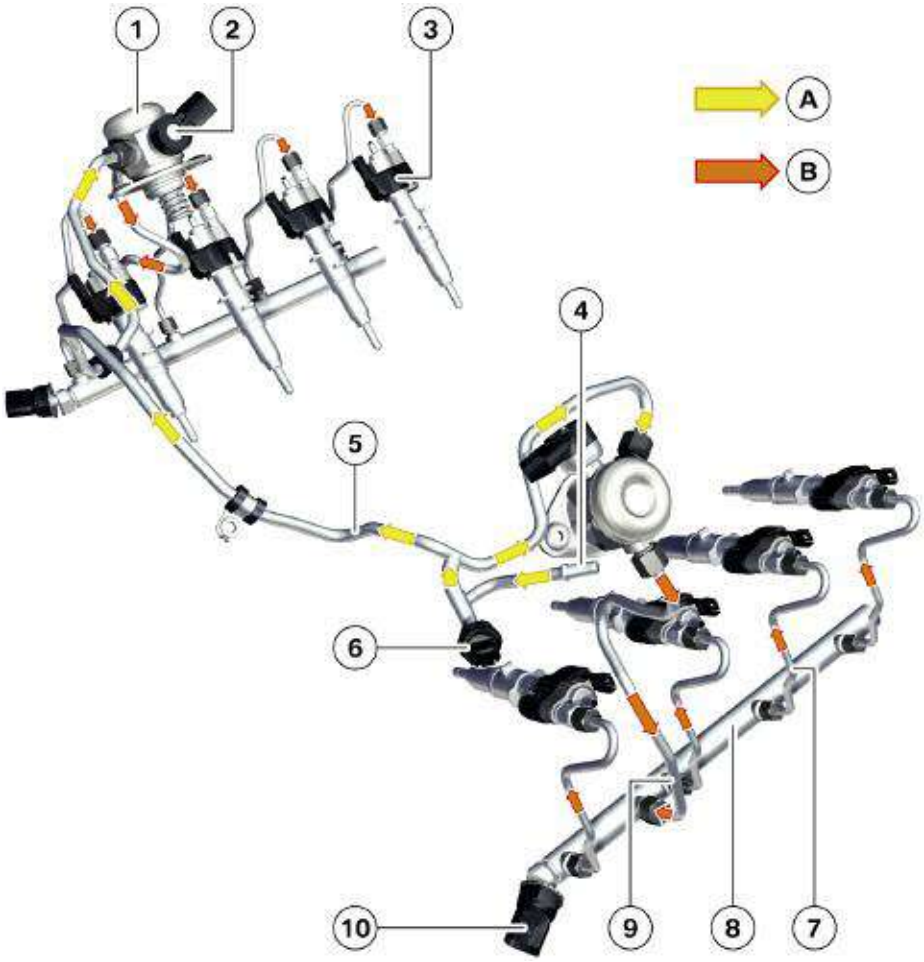

Index	Explanation	Index	Explanation
1	High pressure pump (2 x)	6	Low pressure sensor
2	Volume control valve	7	High pressure fuel line
3	Piezo-injector	8	Fuel rail
4	Low-pressure feed from fuel pump	9	High pressure fuel line (pump to rail)
5	Low pressure feed line	10	Rail pressure sensor (2 x)

cardiagn.com

The admission pressure is monitored by the low pressure sensor. The fuel is delivered by the electric fuel pump in line with demand. If this sensor fails, the electric fuel pump continues to run at 100% delivery with terminal 15 ON.

The fuel is compressed in the permanently driven single-piston high pressure pump and delivered through the high pressure line to the rail.

The fuel accumulated under pressure in the rail in this way is distributed via the high pressure lines to the piezo-injectors.

The required fuel delivery pressure is determined by the engine-management system as a function of engine load and engine speed. The pressure level reached is recorded by the rail pressure sensor and communicated to the engine control unit.

Control takes place by means of the volume control valve based on setpoint/actual value adjustment of the rail pressure.

Configuration of the pressure is geared towards best possible consumption and smooth running of the N63 engine. 200 bar is required only at high load and low engine speed.

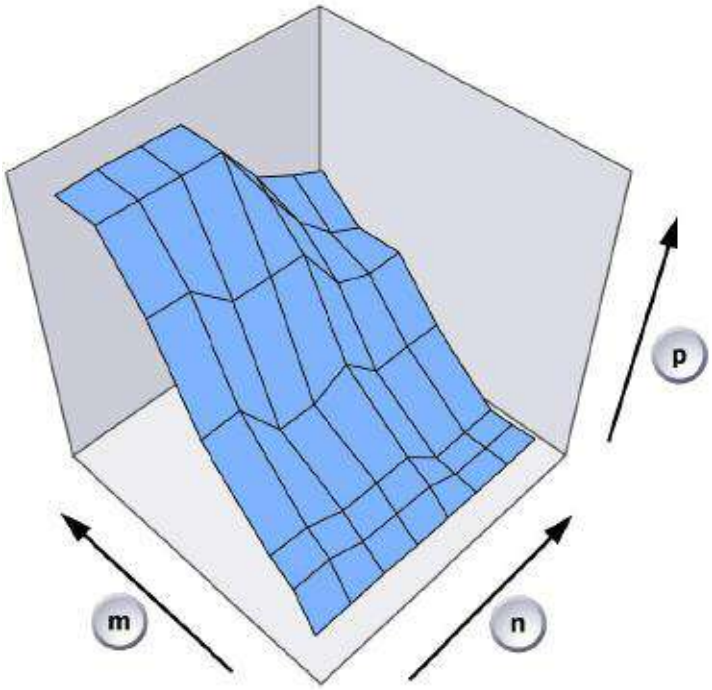

Index	Explanation
p	pressure
m	Engine load
n	Engine speed

cardiagn.com

Design and function of high pressure pump

The fuel is delivered via the supply passage at the admission pressure generated by the electric fuel pump to the high pressure pump.

From there, the fuel is directed via the volume control valve and the low pressure non-return valve into the fuel chamber of the plunger and-barrel assembly.

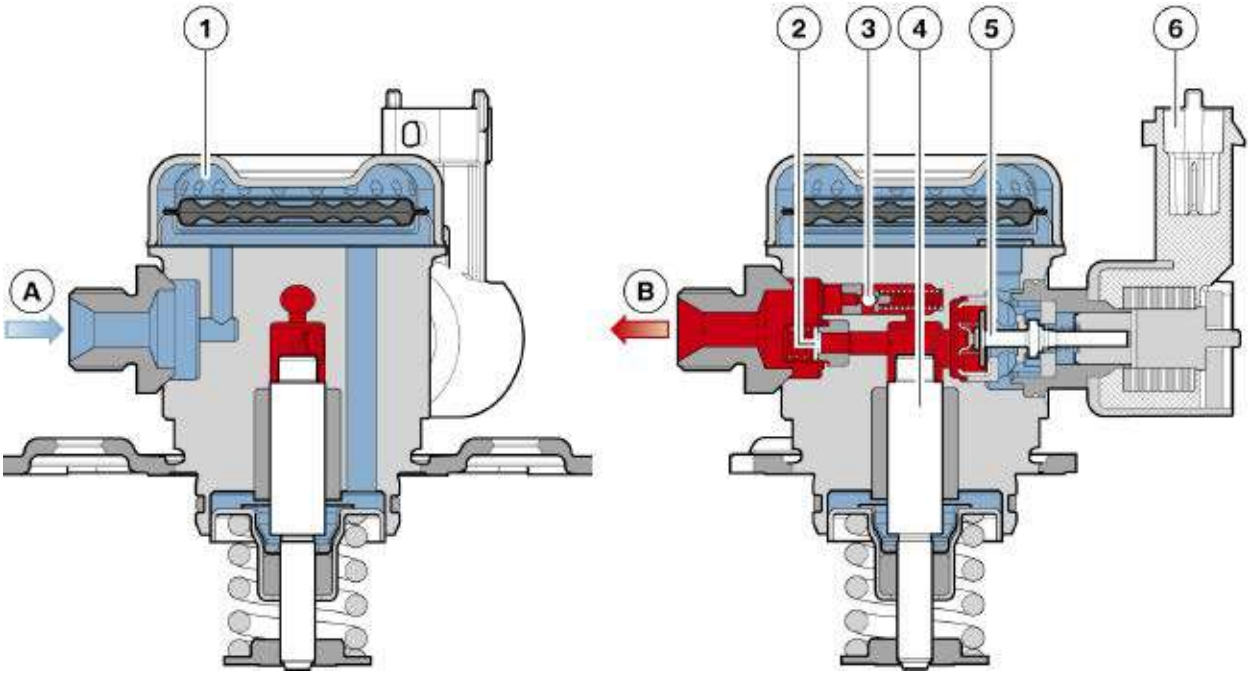

Index	Explanation	Index	Explanation
A	Low pressure connection	3	Pressure relief valve
B	High pressure connection	4	Piston
1	Equalization chamber	5	Volume control valve
2	High pressure non-return valve	6	Electrical connection for the volume control valve

cardiagn.com

The fuel is placed under pressure by a piston in this plunger-and-barrel assembly and delivered via the high pressure non-return valve to the high pressure port. The high pressure pump is bolted to the cylinder head and is driven by a three-point cam on the camshaft.

This means the piston is permanently moved by the three-point cam as soon as the engine is running. Fuel therefore continues to be pressurized for as long as new fuel is supplied to the high pressure pump via the volume control valve.

The volume control valve is activated by means of the engine management connection and determines the delivered quantity of fuel.

The pressure is controlled by the volume control valve opening and closing in the direction from the plunger and barrel assembly to the fuel inlet.

The fuel drawn in by the piston is largely forced back into the pressure inlet when the volume control valve is opened.

The maximum pressure in the high pressure area is limited to 245 bar. If excessive pressure is encountered, the high pressure circuit is relieved by a pressure relief valve via the ports leading to the low pressure area.

cardiagn.com

This is possible without any problems because of the incompressibility of the fuel, i.e. the fuel does not change in volume in response to a change in pressure.

The pressure peak created is compensated for by the liquid volume in the low pressure area. The equalization chamber is incorporated in the feed to the high pressure pump. It has the task of reducing the pressure peaks produced by piston movement in the low pressure system.

When the piston generates pressure, fuel passes between the piston and its guide. This is intentional for lubrication purposes.

A higher pressure is produced at the rear of the piston as it moves downwards. This could give rise to the danger of fuel being forced through the seal of the piston out of the pump and into the engine oil system. The connection to the equalization chamber ensures that there is never a pressure higher than the fuel feed behind the piston.

When opened, the volume control valve prevents pressure fluctuations being transmitted into the low pressure system as changes in volume before and after the piston are equalized.

Hydraulics diagram of fuel system

The volume control valve controls the fuel pressure in the rail. It is activated by the engine management system via a pulse-width modulated (PWM) signal.

Depending on the activation signal, a restrictor cross-section of varying size is opened and the fuel-mass flow required for the respective load point is set.

The pressure relief valve additionally provides the option of reducing the pressure in the fuel rail by directing the fuel out of the high pressure system back into the pump element.

cardiagn.com

Hydraulics diagram of fuel system

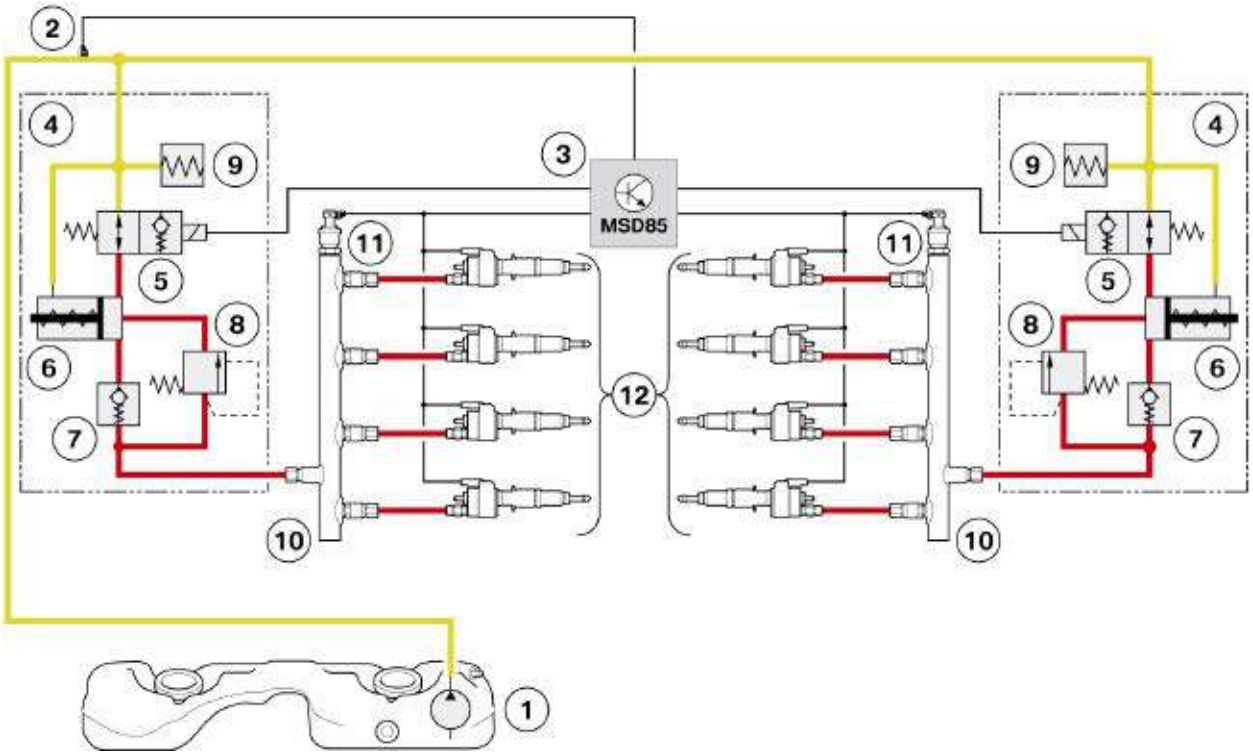

Index	Explanation	Index	Explanation
1	Electric fuel pump	7	High pressure non-return valve
2	Low pressure sensor	8	Pressure relief valve
3	Engine control module	9	Rail
4	High pressure pump	10	Rail pressure sensor
5	Volume control valve	11	Piezo-injectors
6	High pressure pump element		

cardiagn.com

Fuel Injectors

The fuel injectors on the N63 are the familiar piezo-electric design carried over from the N54.

The outward opening, piezo injectors are an integral part of the spray-guided injection strategy used on the HPI injection system.

This type of piezo-injector ensures that the injected fuel spray cone remains stable, even under the prevailing influences of pressure and temperature in the combustion chamber.

This injector design permits injection pressures of up to 200 bar and extremely quick opening of the nozzle needle. In this way, it is possible to inject fuel into the combustion chamber under conditions released from the power cycles limited by the valve opening times.

The piezo-injector is integrated together with the spark plug centrally between the inlet and exhaust valves in the cylinder head. This installation position prevents the cylinder walls or the piston crown from being wetted with injected fuel.

cardiagn.com

A uniform formation of the homogeneous air/fuel mixture is obtained with the aid of the gas movement in the combustion chamber and a stable fuel spray cone.

The gas movement is influenced on the one hand by the geometry of the intake passages and on the other hand by the shape of the piston crown. The injected fuel is swirled in the combustion
chamber with the boost air until a homogeneous mixture is available throughout the compression space at the point of ignition.

Injector adjustment

As with the piezo injectors from the N54, the injector adjustment must be carried out when the injectors are replaced.

When the injectors are manufactured, a multitude of measurement data is recorded at specific points in the factory. In this way, the
tolerance ranges for injector-quantity adjustment are determined and specified in a six-digit number combination.

Information on the lift performance of the injector is also added for injector voltage adjustment. Injector adjustment is required because of the individual voltage demand of each piezo-actuator.

An allocation is made to a voltage demand category, which is included in the number combination on the injector. These data are transmitted to the control unit.

During engine operation, these values are used to compensate for deviations in the metering and switching performance.

When replacing an injector, it is absolutely essentially to carry out an injector adjustment.

cardiagn.com

Injection Strategy

Injection of the fuel mass required for the operating situation can take place in up to three individual injections. Which option is used in the relevant operating situation is dependent on engine load and speed.

Here the actual time resulting from the engine speed available for metering the fuel is an important framework quantity.

The following graphic shows the fuel injection strategy for an engine at operating temperature.

A special situation during the operation of any engine is the range in which a high load occurs at low engine speed, so-called "Low End Torque" operation. In this operating situation, the required fuel mass is metered to the engine in three individual injections.

This results in a highly effective mixture formation which in the final analysis has the effect of both increasing power output and saving fuel.

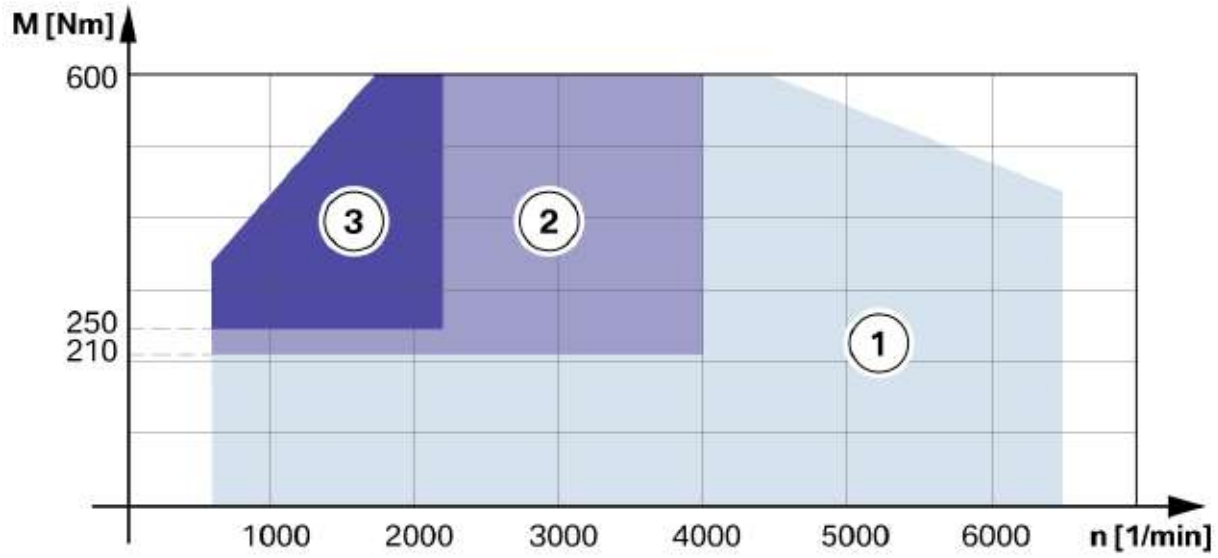

Index	Explanation	Index	Explanation
n	Engine speed	2	Two-time injection
m	Torque	3	Three-time injection
1	One-time injection		

cardiagn.com

Operating mode: Catalytic Converter Heating

In order to bring the catalytic converters up to operating temperature as quickly as possible, the N63 engine has a catalytic converter heating mode for when the engine is started from cold.

In this mode, combustion heat is intentionally introduced into the exhaust train and not used first and foremost to develop power output. The point of ignition is moved to 30° crankshaft angle after TDC.

The main quantity of the required fuel is injected before TDC and mixed with the boost air. The piston is situated after TDC in its downward travel such that the air/fuel mixture is already expanding again, which reduces the ignitability of the mixture.

In order to ignite the mixture reliably, a small residual quantity of fuel is injected 25° crankshaft angle after TDC and this guarantees an ignitable mixture at the spark plug.

This small fuel quantity therefore provides for ignition of the residual charge in the combustion chamber. This operating mode is set by the engine-management system after a maximum period of 60 seconds from engine starting but is terminated if the catalytic converter response temperature is reached earlier.

Injector control and adaptation

The fuel mass required for the operating situation is injected by the piezo-injector into the combustion chamber. This mass can be influenced by three correcting variables:

- the rail pressure
- the injector opening time
- and the injector opening lift

The injector opening time and the injector opening lift are activated directly at the piezo injector. The opening time is controlled via the signal ti and the opening lift via the energy quantity in the activation of the piezo-injector.

Injector adaptation

The fuel masses and injection cycles determined from the load/speed map are included in a pilot-control program map. Here, while further framework parameters are taken into consideration, the energy quantities and injector opening times required to activate the injectors are determined. The N63 engine can be safely and reliably operated with these characteristic map values.

For optimization of:

- Emission values
- Smooth running
- Fuel consumption
- Power output

cardiagn.com

The controlled variables of energy quantities and injector opening times are continuously monitored. This occurs on a cylinder-selective basis by way of lambda closed-loop control.

The residual oxygen in the exhaust gas is measured in each case for cylinder bank 1 and cylinder bank 2. The new oxygen sensors permit allocation to the individual cylinders.

This measurement result is compared with the values expected from the set correcting variables. The result of a deviation is that the injector opening signal is adapted. This adaptation is stored in the control unit and is therefore available for subsequent engine operation.

However, these stored values are lost when the system is flashed and must be relearned. A further adaptation of the injector activation takes place depending on time and use. This cylinder-selective adaptation involves a check of the residual oxygen content with a conclusion as to the cylinder causing the situation.

To this end, it is necessary for part of the exhaust gas flow not to be swirled in the turbocharger. For this reason, the flap of the wastegate valve must be fully opened, i.e. swung out of the exhaust-gas flow. This wastegate flap position extends beyond its normal opening position in engine operation.

Based on the result of this cylinder-selective monitoring, the energy quantity is adapted if necessary to activate the injectors.

Furthermore, the cylinder-selective adaptation includes if necessary an adaptation of the injector opening signal based on smooth running monitoring of the N63 engine.

Overall adaptation of the injectors is limited to a 15% additional quantity.

HPI Limp-home mode

If a fault is diagnosed in the system, such as e.g. failure of the rail pressure sensor, the volume control valve is de-energized; the fuel then flows via a so-called bypass into the rail.

In the event of HPI limp-home mode, turbocharging is deactivated by an opening of the wastegate valves.

Causes of HPI limp-home mode may be:

- Implausible rail pressure sensor values
- Failure of volume control valve
- Leakage in high pressure system
- Failure of high pressure pump
- Failure of rail pressure sensor

cardiagn.com

HPI System Service

Fuel System Safety

- Working on this fuel system is only permitted after the engine has cooled down. The coolant temperature must not exceed 40°C. This must be observed without fail, otherwise there is a danger of fuel sprayback on account of the residual pressure in the high pressure system.
- When working on the high pressure fuel system, take particular care to ensure conditions of absolute cleanliness and follow the work sequences described in the repair instructions. Even the tiniest contaminants and damage to the screw connections on the high pressure lines can cause leaks.
- When working on the fuel system of the N63 engine, it is important to ensure that the ignition coils are not fouled by fuel. The resistance of the silicone material is significantly reduced by heavy fuel contact. This can cause sparkover at the spark-plug head and cause misfires.
- Before making modifications to the fuel system, remove the ignition coils without fail and protect the spark-plug slot against the ingress of fuel with a cloth.
- Before refitting the piezo-injector, remove the ignition coils and ensure conditions of absolute cleanliness.
- Ignition coils heavily fouled by fuel must be replaced.

Do not open fuel lines until the coolant temperature has cooled to below 40 degrees Celsius (104 degrees Fahrenheit).

ACHTUNG!	Öffnen des Kraftstoffsystems bei Kühlmitteltemperatur über 40 °C nicht zulässig. Gefahr von Körperverletzung. Reparaturanleitung beachten.
CAUTION!	Do not open the fuel system if the coolant temperature is above 40 °C/104 °F – risk of injury! Consult the repair manual.
ATTENTION !	Il est interdit d'ouvrir le système d'alimentation en carburant lorsque la température du liquide de refroidissement est supérieure à 40 °C. Risque de blessure. Respecter les instructions du Manuel de réparation.
¡ATENCIÓN!	Prohibido abrir el sistema de combustible cuando la temperatura del líquido refrigerante supere los 40 °C. Peligro de lesiones. Consultar el manual de reparaciones.
注意！	冷却液温度高于40摄氏度时禁止打开燃油系统。存在身体伤害的危险。注意维修说明。

7567417

cardiagn.com

Cooling System

Due to the exhaust turbocharging system and the compact arrangement of the turbochargers in the V-space, the heat output of the N63 engine is very high. Correspondingly, great significance is attached to the cooling system. In addition, an indirect charge air cooling system has been developed for the first time where the charge air is cooled by an air-to-coolant heat exchanger. There are two separate cooling circuits for engine and charge air cooling.

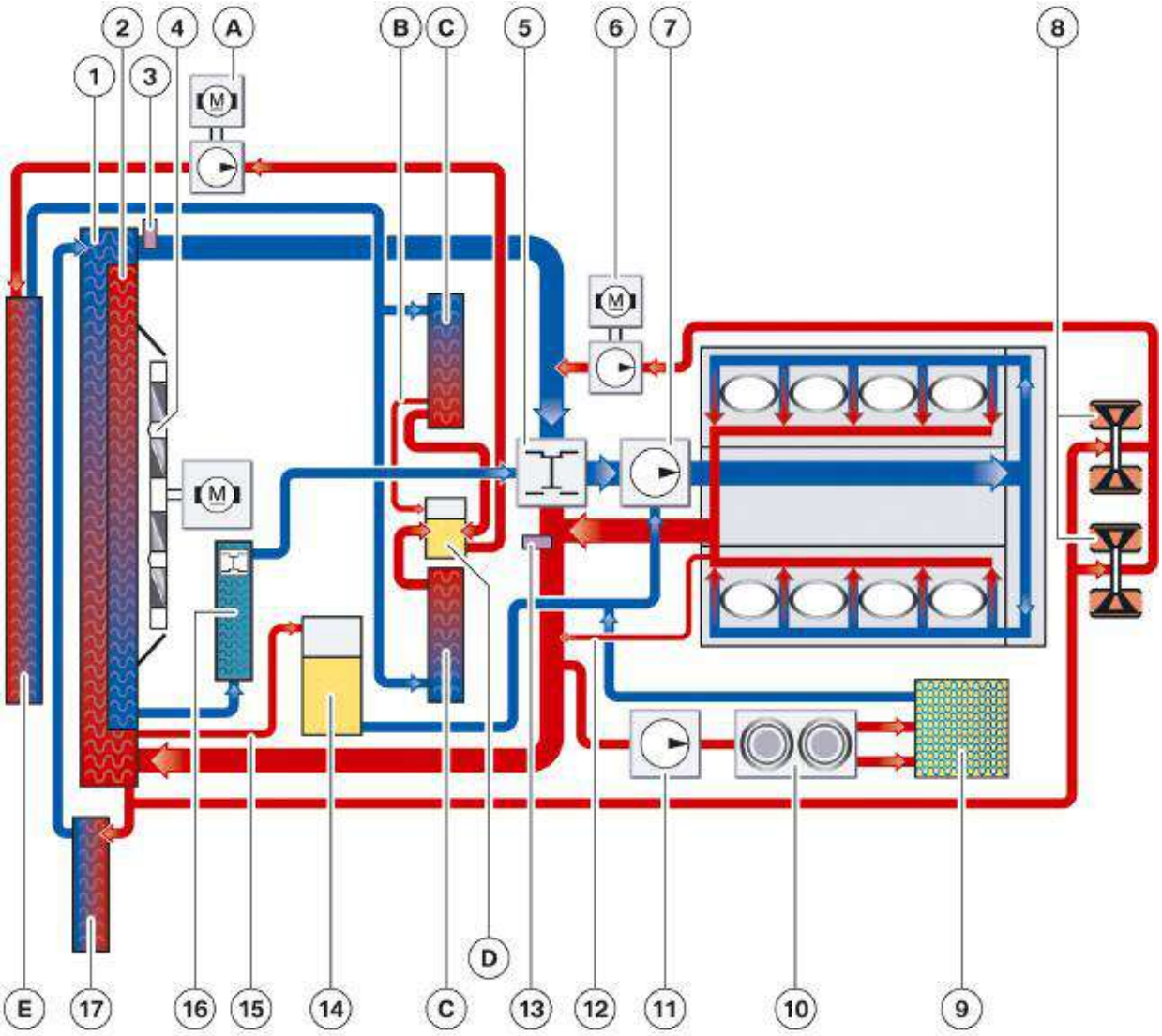

cardiagn.com

Index	Explanation	Index	Explanation
1	Radiator	12	Vent line
2	Radiator for transmission cooling	13	Coolant temperature sensor at engine outlet
3	Coolant temperature sensor at radiator outlet	14	Expansion tank
4	Electric fan	15	Vent line
5	Characteristic map thermostat	16	Transmission fluid-to-coolant heat exchanger
6	Electric auxiliary coolant pump for turbocharger cooling	17	Auxiliary coolant radiator
7	Coolant pump	A	Electric coolant pump for charge air cooling
8	Exhaust turbocharger	B	Vent line
9	Heating heat exchanger	C	Intercooler
10	Duo-valve	D	Expansion tank for charge air cooling
11	Electric auxiliary coolant pump for vehicle heating	E	Radiator for charge air cooling

Engine Cooling

The engine cooling system undertakes the classic task of carrying heat away from the engine and maintaining a defined operating temperature as constant as possible. As on the N54 engine, the two turbochargers are also cooled.

The N63 engine features a conventional coolant pump that is driven by the belt drive. This pump cannot be used to continue cooling the turbochargers after the engine has been shut down.

cardiagn.com

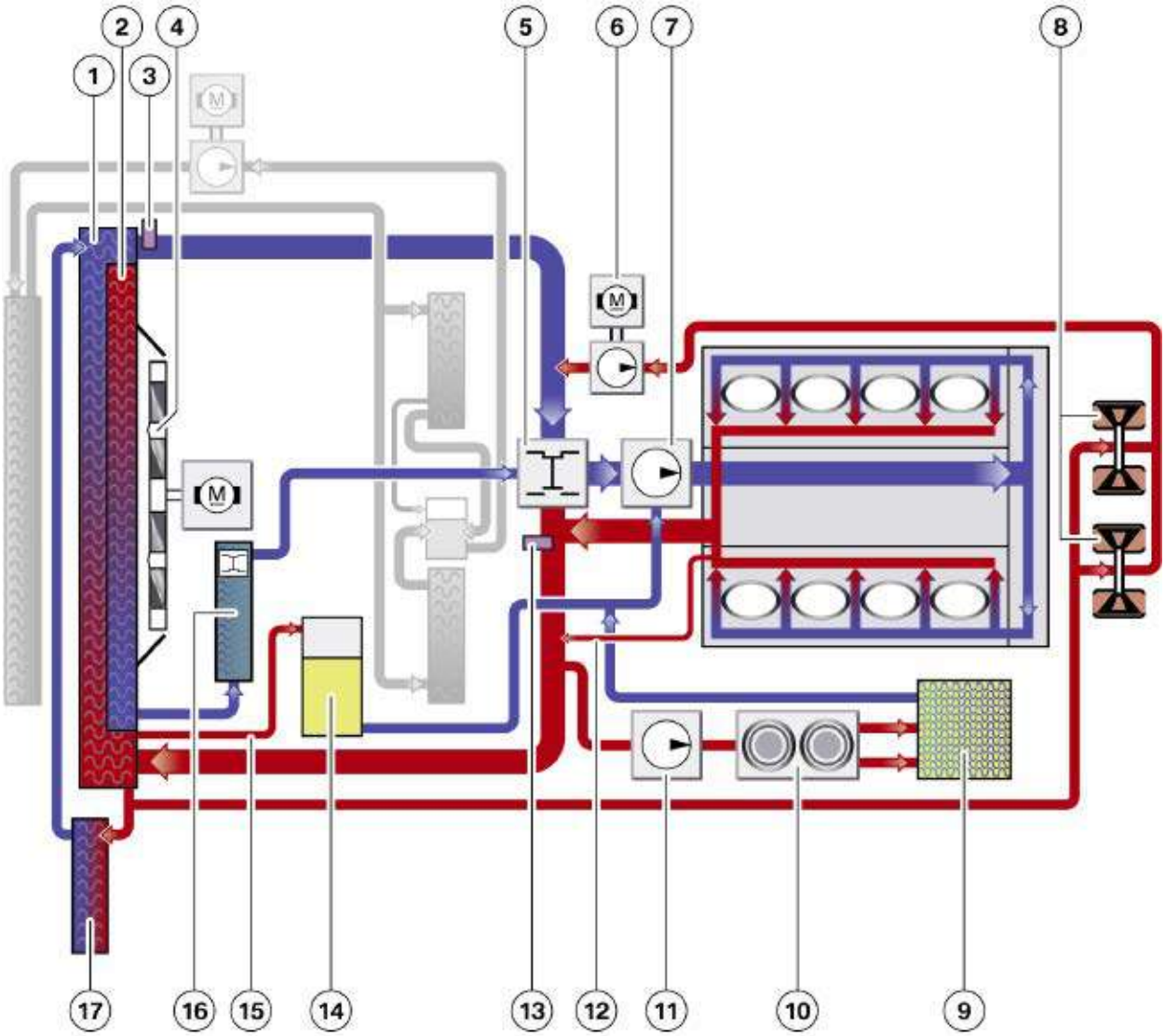

Index	Explanation	Index	Explanation
1	Radiator	10	Duo-valve
2	Radiator for transmission cooling	11	Electric auxiliary coolant pump for vehicle heating
3	Coolant-temperature sensor at radiator outlet	12	Vent line
4	Electric fan	13	Coolant-temperature sensor at engine outlet
5	Characteristic map thermostat	14	Expansion tank
6	Electric auxiliary coolant pump for turbocharger cooling	15	Vent line
7	Coolant pump	16	Transmission fluid-to-coolant heat exchanger
8	Exhaust turbocharger	17	Auxiliary coolant radiator
9	Heating heat exchanger		

cardiagn.com

Auxiliary Coolant Pump for Turbocharger Cooling

The electric coolant pump on the N54 engine features an after-running function to carry away the heat build-up from the turbochargers after the engine has been shut down.

For this function, the N63 engine is equipped with an additional electrically operated coolant pump with an output of 20 W. This pump is also used during engine operation to assist turbocharger cooling.

The auxiliary electric coolant pump cuts in, taking the following factors into consideration:

- Coolant temperature at engine outlet
- Engine oil temperature
- Injected fuel quantity

The heat input into the engine is calculated based on the injected fuel quantity. This function is similar to the heat management function on 6-cylinder engines.

The after-running period of the auxiliary electric coolant pump can extend up to 30 minutes. The electric fan also cuts in to improve the cooling effect.

As in previous systems, the electric fan runs for a maximum of 11 minutes, however, it now operates more frequently.

System Protection

As on the N54 engine, in the event of the coolant or engine oil being subject to excessive temperatures, certain functions in the vehicle are influenced in such a way that more energy is made available to the engine cooling system, i.e. temperature increasing loads are avoided.

cardiagn.com

Charge Air Cooling

With the introduction of the N63 engine, indirect charge air cooling is used for the first time at BMW. Heat is taken from the charge air by means of an air-to-coolant heat exchanger. This heat is then given off via a coolant-to-air heat exchanger into the ambient air. For this purpose, the charge air cooling system has its own low temperature cooling circuit, which is independent of the engine cooling circuit.

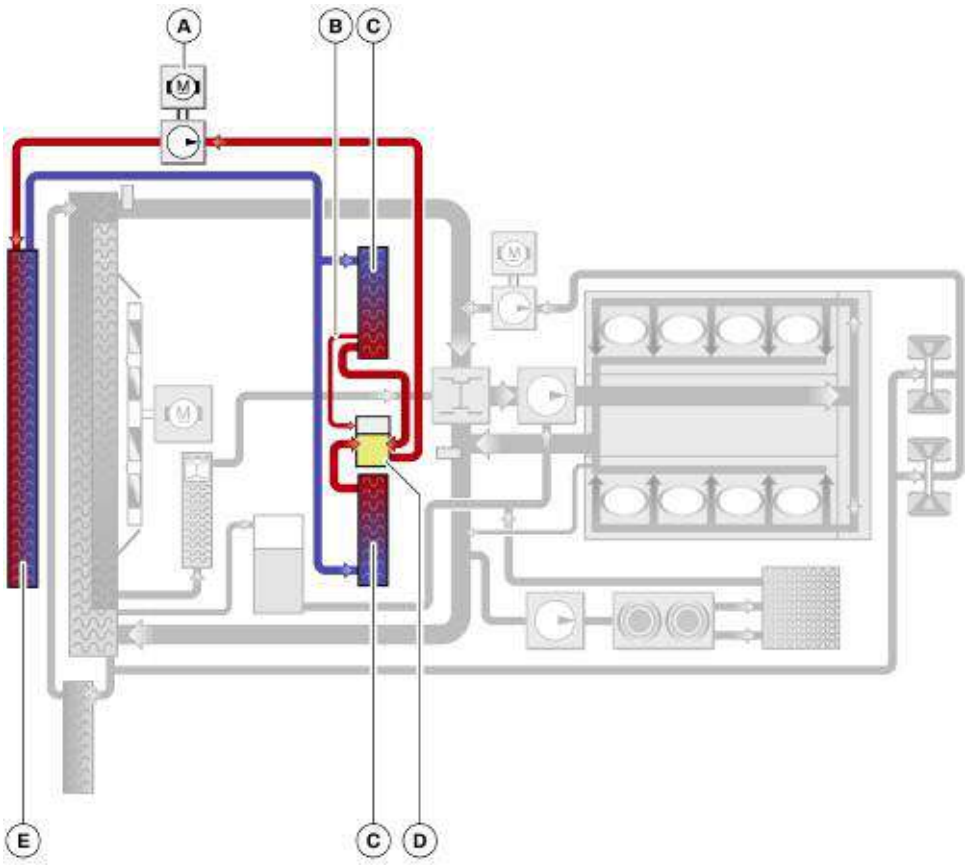

Index	Explanation	Index	Explanation
A	Electric coolant pump for charge air cooling	D	Expansion tank for charge air cooling
B	Vent line	E	Radiator for charge air cooling
C	Intercooler		

cardiagn.com

Intercoolers
The intercoolers are installed on the end faces of the cylinder heads. They operate in accordance with the counterflow principle and cool the charge air by up to 80°C.

Electric Coolant Pump
The coolant circuit for charge air coolant is operated with a 50 W pump. This pump does not run automatically when the engine is turned on.

Pump actuation depends on the following values:

- Outside temperature
- Difference between charge air temperature and outside temperature

Venting
A separate venting routine is provided for the purpose of venting the low-temperature circuit of the charge air cooling system. This venting is initiated in the same way as for the cooling circuit on 6-cylinder engines.

The venting test module can be found in the “Service Functions” section of the diagnostic program.

cardiagn.com

Review Questions - N63 Engine

1. What type of pump is used for the high pressure fuel pump?

   A. Vane pump

   B. Piston pump

   C. Gear pump

   D. None of the above

2. When the N63 is at a low engine speed under high load, the fuel pressure is about:

   A. 150 bar

   B. 200 bar

   C. 225 bar

   D. 245 bar

3. The diverter valves for “blow off” control are:

   A. Vacuum actuated

   B. Mechanically actuated

   C. Electrically actuated

   D. None of the above

4. The boost pressure of the N63 engine, under full load, is:

   A. 0.6 bar

   B. 0.8 bar

   C. 0.9 bar

   D. 1.1 bar

5. The pre-catalyst O2 sensors are:

   A. LSF 4.2

   B. LSU ADV

   C. LSU4.9

   D. LSH25

cardiagn.com

6. The new catalytic converter is ready for operation:

   A. in 60 seconds
   B. in less than 2 minutes
   C. in 30 seconds
   D. in less than 5 seconds

7. The engine identification plate is located:

   A. Behind the starter
   B. Behind the AC compressor
   C. Under the alternator
   D. On the bank 1 cylinder head

8. The new N63 engine uses _____ technology for the HPI system.

   A. Wall guided
   B. Spray guided
   C. Lean running
   D. Stratified

9. In order to heat the catalytic converters, the HPI injection system will inject additional fuel:

   A. 25 degrees ATDC
   B. 30 degrees BTDC
   C. 150 degrees BTDC
   D. 5 degrees BTDC

10. When servicing the fuel system on the N63 engine, the fuel lines must not be opened until the coolant temperature is:

   A. Below 200 degrees C
   B. Below 100 degrees C
   C. Below 104 degrees F
   D. Below 72 degrees F

cardiagn.com

Note: Please reference the BMW Engines Introduction module for questions 11, 12, 13, 14:

11. The E71 (N63), is a able to achieve _____ horsepower at 5500 RPM.

    A. 360

    B. 375

    C. 400

    D. 425

12. The impressive torque output of the N63 engine (610 Nm) is available at _____ RPM.

    A. 1250

    B. 1750

    C. 2250

    D. 2500

13. The new engine management system for the N63 is designated"

    A. MSV70

    B. MSD85

    C. MSD80

    D. MSVN63

14. To reduce weight, the crankshaft main journal diameter has been reduced:

    A. from 80 mm to 75 mm

    B. from 75 mm to 70 mm

    C. from 70 mm to 65 mm

    D. from 65 mm to 60 mm

cardiagn.com

15. Which of the following statements **BEST** describes the construction of the N63 crankcase?

    A. The crankcase is made from aluminum and uses a “closed deck” design with “Alusil” cylinder bores

    B. The crankcase is made from magnesium and uses a “closed deck” design with “cast iron” cylinder liners

    C. The crankcase is made from aluminum and uses a “open deck” design with “Alusil” cylinder bores

    D. The crankcase is made from aluminum and uses a “closed deck” design with “cast iron” cylinder liners

16. Which of the following statements **BEST** describes the oil pump drive method on the N63?

    A. The oil pump is driven by a gear to gear connection by a gear at the rear of the crankshaft

    B. The oil pump is chain driven off the front of the engine by a sprocket which is integrally cast into the crankshaft

    C. The oil pump is driven by the exhaust camshaft on bank 1

    D. The oil pump is chain driven off the rear of the engine by a sprocket which is integrally cast into the crankshaft

17. The displacement of the N63 is:

    A. 4.0 liters B. 4.4 liters C. 4.8 liters D. 5.0 liters

18. Which of the following **BEST** describes the camshaft manufacturing process?

    A. Presta process

    B. Hydroforming

    C. Cast Iron

    D. None of the above

cardiagn.com

19. The crankcase ventilation system on the N63 engine uses cyclone separators which are located:

    A. In the intake manifold

    B. In the cylinder head covers

    C. In the fresh air intake to the turbocharger

    D. None of the above

20. What special tool is needed to install the ELAST drive belt on the N63?

    A. 11 1 280

    B. 11 2 450

    C. 11 3 560

    D. None of the above

21. The high pressure fuel pumps for the N63 are driven:

    A. by a tandem connection to the vacuum pump

    B. by a lobe on the exhaust camshafts

    C. by a chain connection to the intake camshafts

    D. None of the above

22. When removing the intake manifolds, which of the following components must be removed to access the attaching bolts?

    A. the turbochargers

    B. the fuel rails

    C. the engine mounts

    D. the cylinder head covers

23. The intercoolers on the N63 engine each have a sensor. What does this sensor monitor?

    A. Coolant temperature for the intercoolers

    B. Air charge pressure and temperature

    C. Air charge temp only

    D. Air charge pressure only

cardiagn.com