THEFT DETERRENT SYSTEM

PARTS LOCATION

HATCHBACK:

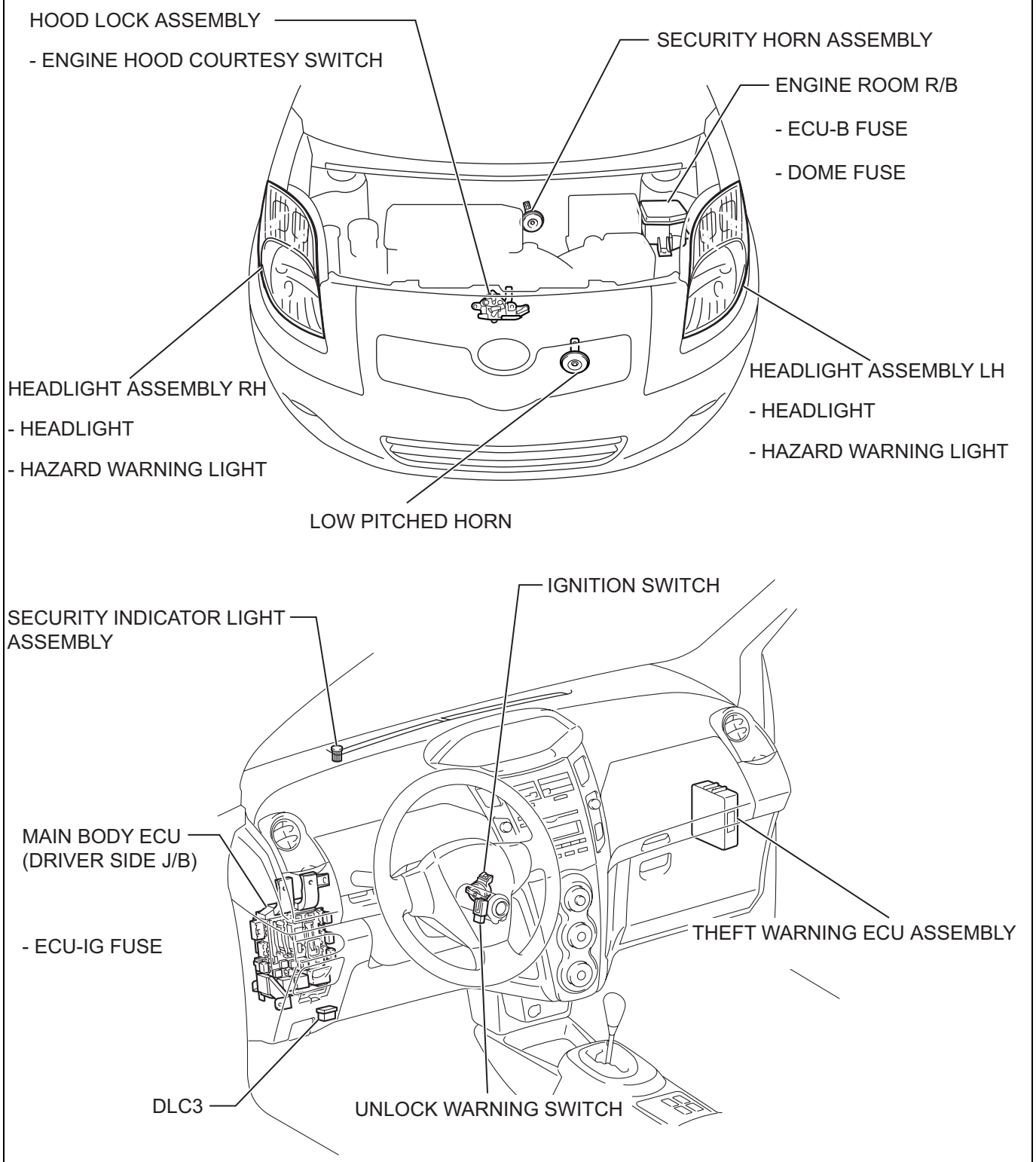

TD

TD

SEDAN:

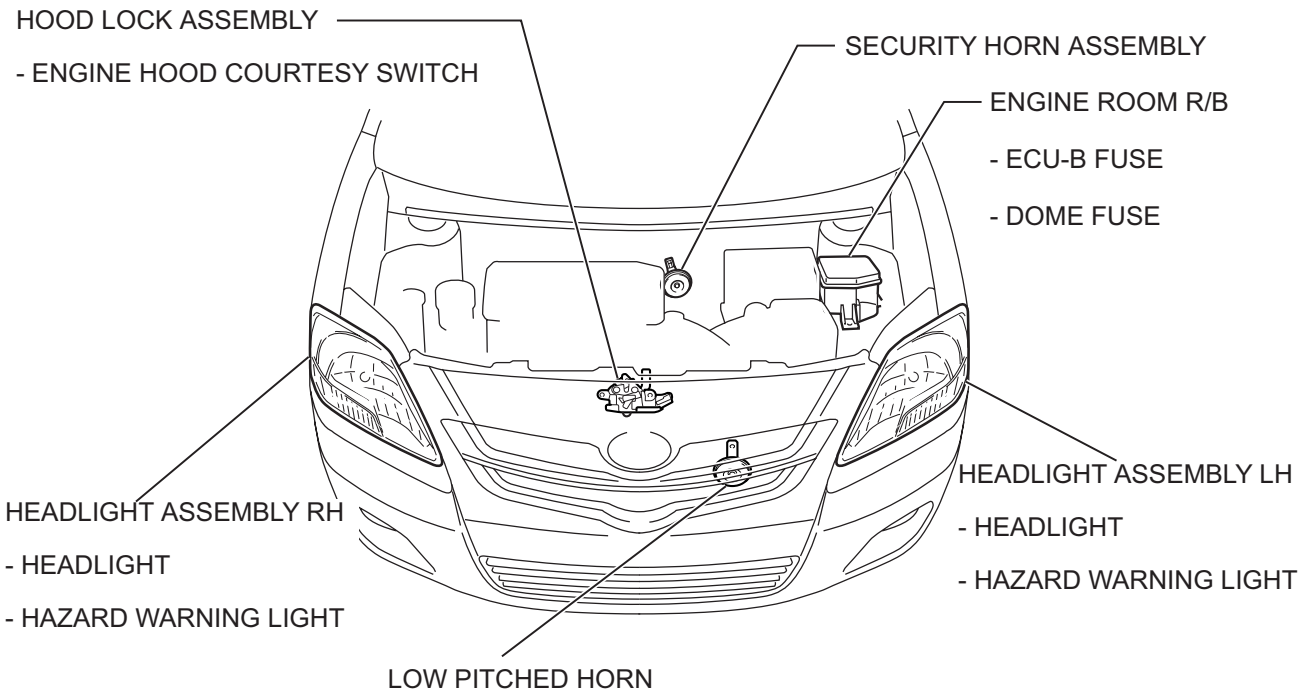

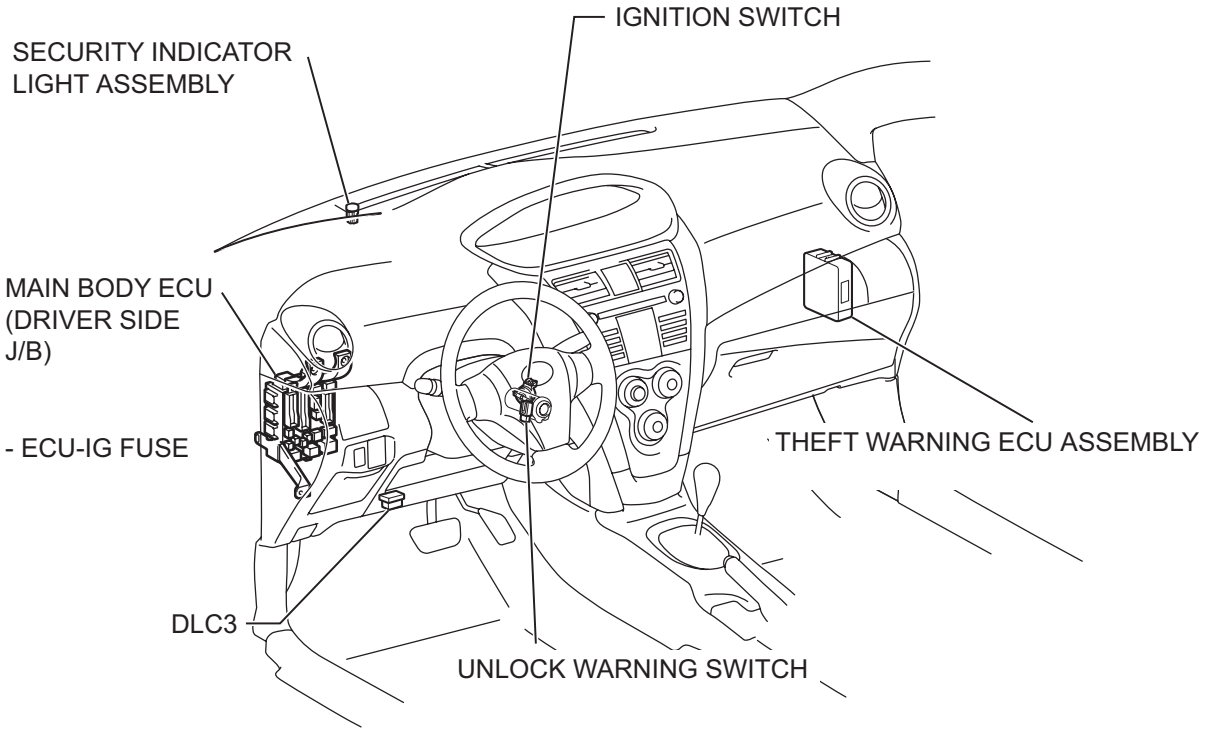

Y

B143227E01

HATCHBACK:

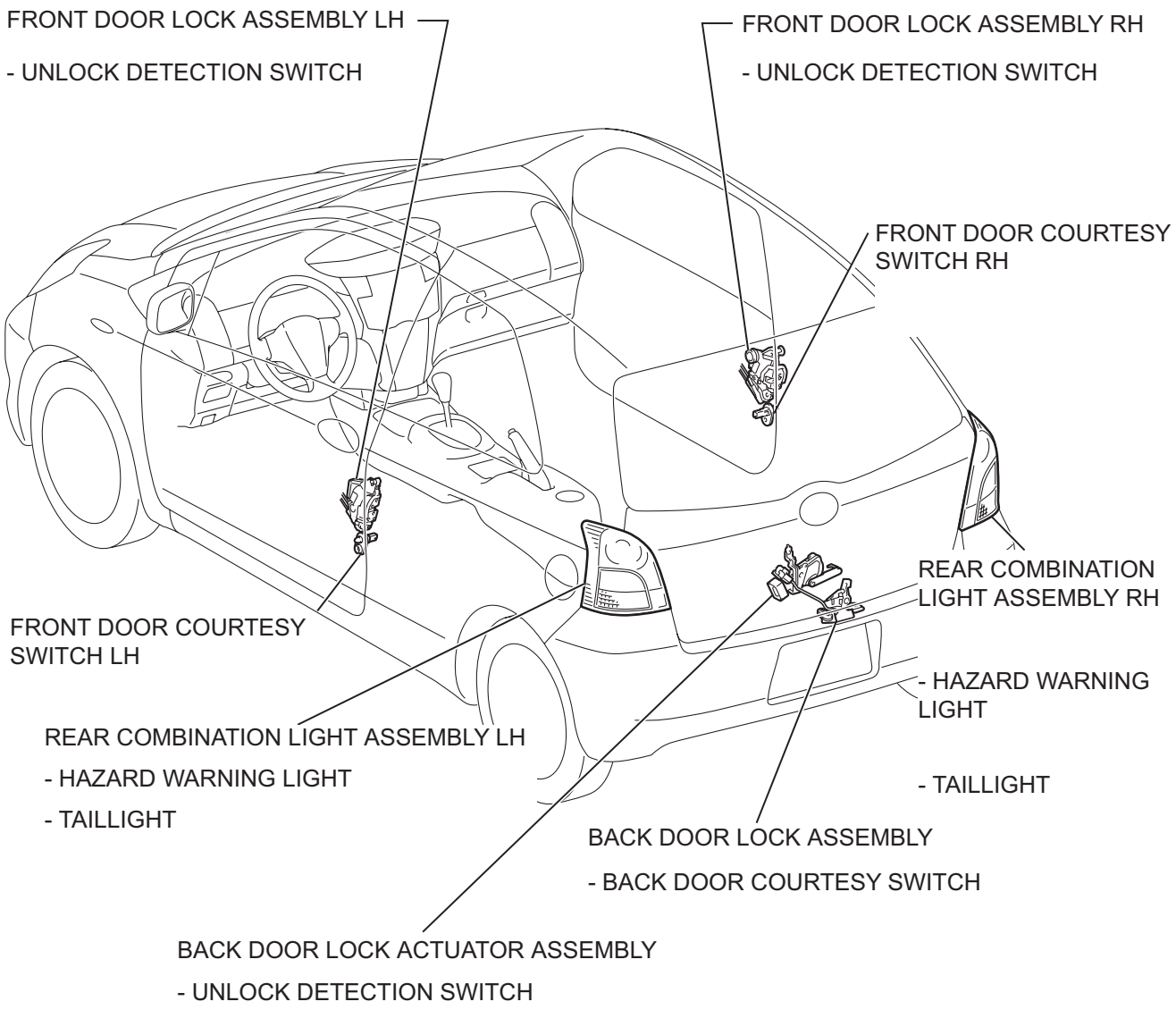

Y

B121321E03

TD

SEDAN:

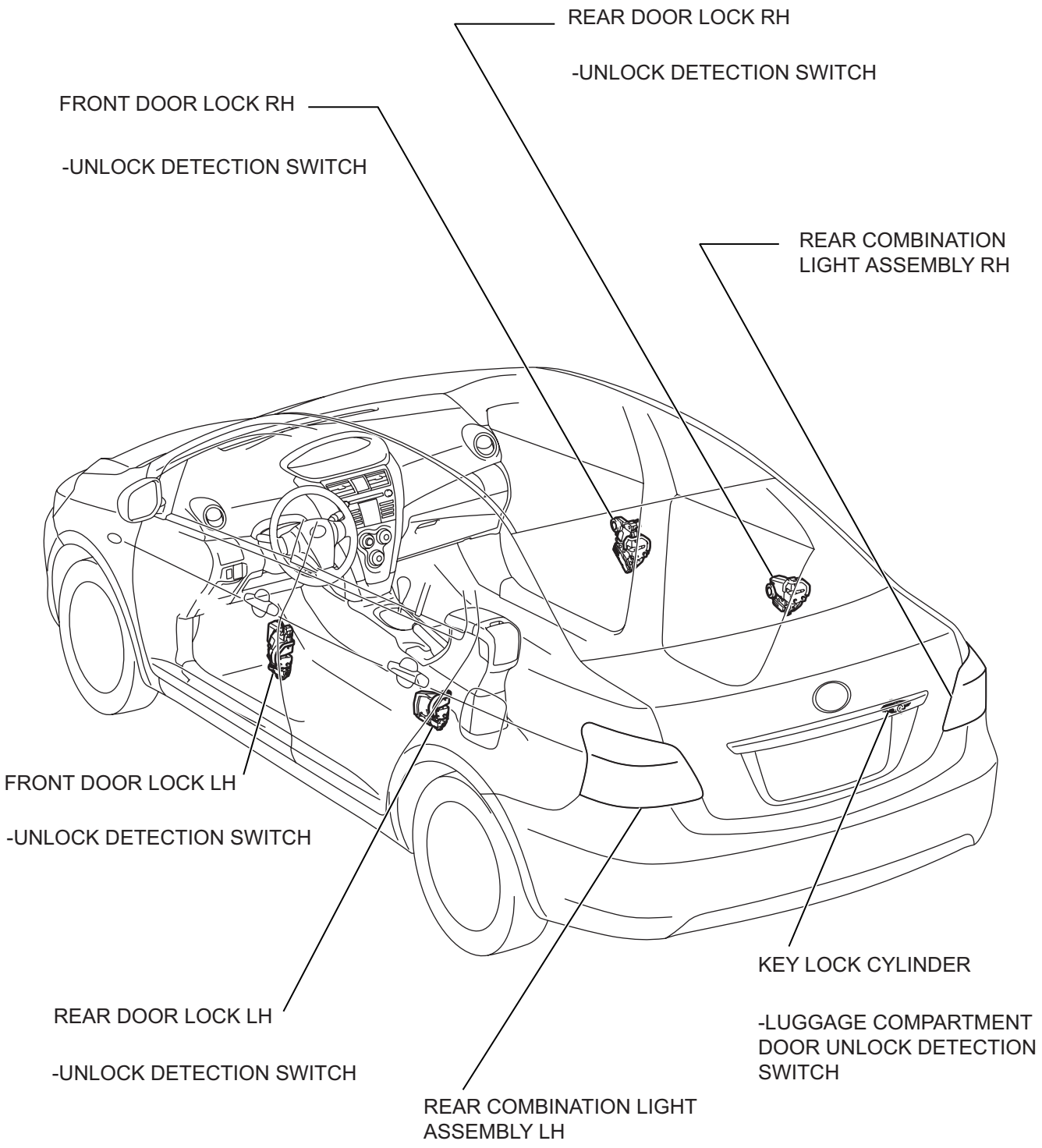

B144441E01

SEDAN:

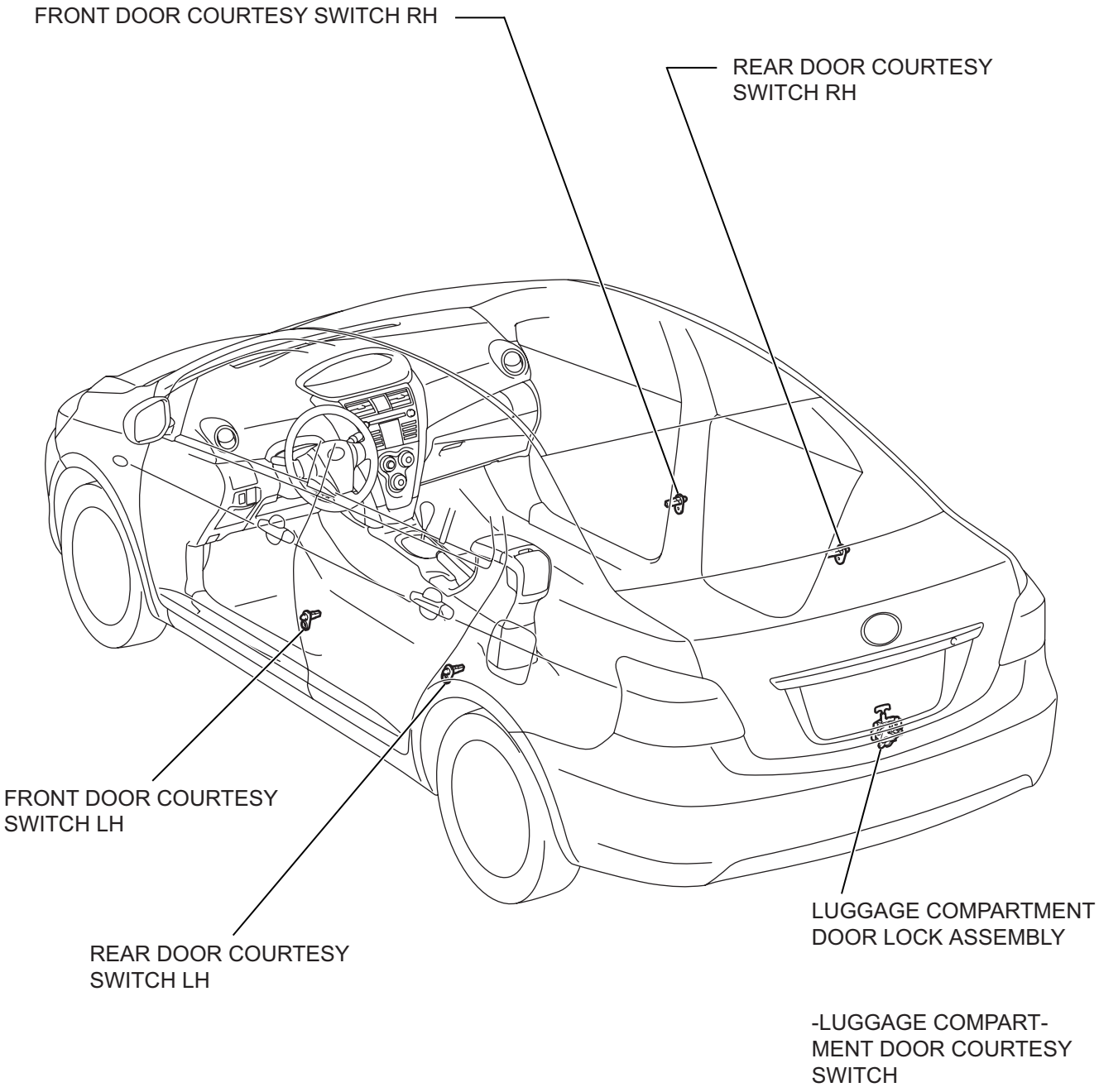

H

B144442E01

TD

SYSTEM DIAGRAM

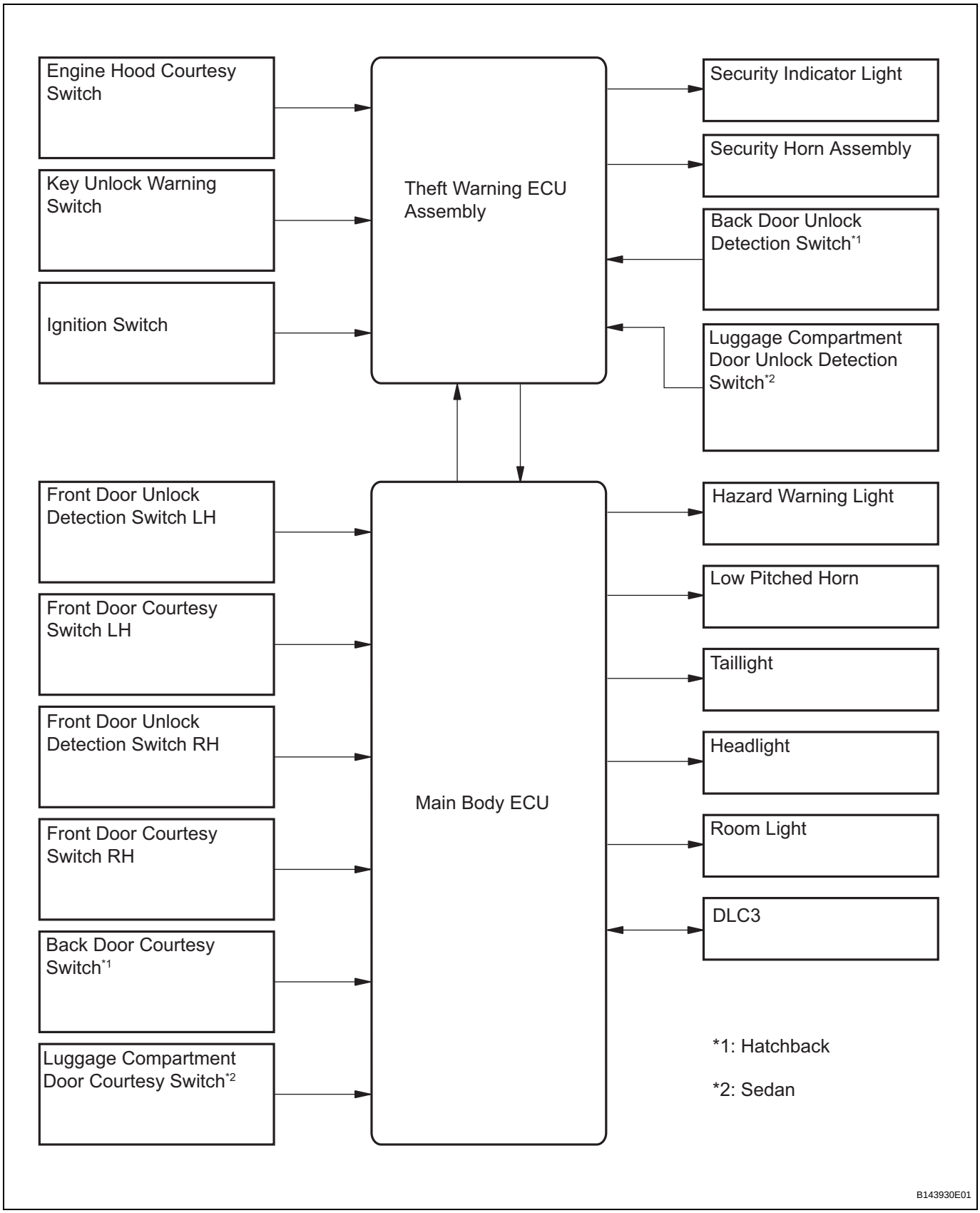

SYSTEM DESCRIPTION

1. OUTLINE OF THEFT DETERRENT SYSTEM

(a) When any attempt is made to forcibly enter the vehicle, open the engine hood or unlock any door without using a key, or when the battery terminals are disconnected and then reconnected, this system causes the vehicle horn and security horn to sound, the interior light to light up, and the hazard warning lights, taillights and headlights to flash, in order to deter break-in and theft.

(b) The theft deterrent system has two arming modes; Active and Passive. Active arming mode allows the theft deterrent system to activate normally. Passive arming mode is used for the servicing. The intelligent tester allows the theft deterrent system to switch between Active and Passive.
(See page TD-16)

(c) Each mode has 4 states; a disarmed state, an arming preparation state, an armed state and an alarm sounding state.

(1) Disarmed state:
- The alarm function is not operating.
- The theft deterrent system is not operating.

(2) Arming preparation state:
- The state before the system goes into the armed state.
- The theft deterrent system is not operating.

(3) Armed state:
- The theft deterrent system is operating.

(4) Alarm sounding state:
- The alarm function is operating.
  Alarm time:
  Approximately 57 seconds.

Alarm form manifestation and duration:

Alarm Form	Headlight	Blinks (approximately 0.4 seconds cycles)
	Taillight	Blinks (approximately 0.4 seconds cycles)
	Hazard Warning Light	Blinks (Cycle of flasher relay)
	Interior Light	Illuminates
	Vehicle Horn	Sounds (approximately 0.4 seconds cycles)
	Security Horn	Sounds (approximately 0.4 seconds cycles)
Alarm Duration	Approximately 57 seconds	

2. ACTIVE ARMING MODE

HINT:
- Active arming mode starts the alarm control immediately after the doors are locked.
- This system activates as described in the diagram below when one item for each condition is met.

(a) Active arming mode

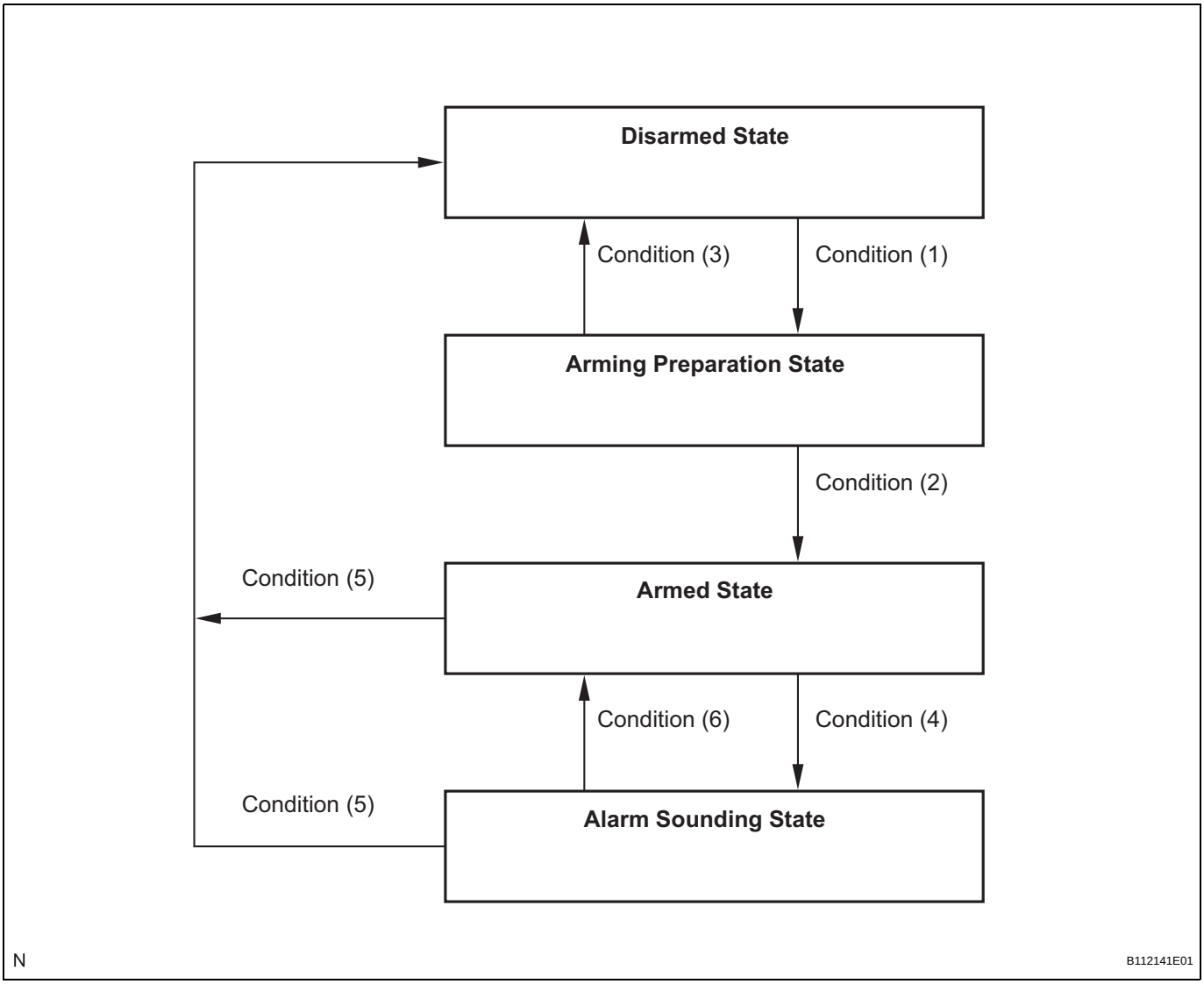

Hatchback:

Condition	Item
Condition (1)	(No key in ignition key cylinder) 1. All doors locked using key* when all doors and engine hood closed. 2. Any open door closed and locked when all other doors locked and engine hood closed.
Condition (2)	1. After condition (1) met, 30 seconds allowed to enter armed state.
Condition (3)	One of following operations performed within 30 seconds of entering arming preparation state: 1. Any door unlocked. 2. Any door opened. 3. Engine hood opened. 4. Key inserted into ignition key cylinder. 5. Battery reconnected.
Condition (4)	One of following operations performed in armed state: 1. Any door opened. 2. Engine hood opened. 3. Battery reconnected. 4. Any door unlocked without using key.
Condition (5)	One of following operations performed in alarm sounding state or armed state: 1. Any door unlocked using key. 2. Key inserted into ignition key cylinder and 2 seconds elapse since engine start.
Condition (6)	1. After approximately 57 seconds, alarm stops sounding and system returns to armed state.

HINT:
*: When the driver door or passenger door key cylinder is turned to the lock position using a key with all the doors locked and the engine hood closed, the system enters the arming preparation state. However, the system does not enter the arming preparation state when the back door lock key cylinder is turned to the lock position.

Sedan:

Condition	Item
Condition (1)	(No key in ignition key cylinder) 1. All doors locked using key when all doors, engine hood and luggage compartment door closed. 2. Any open door closed and locked when all other doors locked, and engine hood and luggage compartment door closed. 3. All doors locked by using transmitter LOCK switch*.
Condition (2)	1. After condition (1) met, 30 seconds allowed to enter armed state.
Condition (3)	One of following operations performed within 30 seconds of entering arming preparation state: 1. Any door unlocked. 2. Any door opened. 3. Engine hood opened. 4. Luggage compartment door opened. 5. Key inserted into ignition key cylinder. 6. Battery reconnected.
Condition (4)	One of following operations performed in armed state: 1. Any door opened. 2. Any door unlocked without using key or transmitter*. 3. Engine hood opened. 4. Luggage compartment door opened without using key. 5. Battery reconnected. 6. Ignition switch turned on without using key.
Condition (5)	One of following operations performed in alarm sounding state or armed state: 1. Any door unlocked or luggage compartment door opened using key. 2. Key inserted into ignition key cylinder and 2 seconds elapse since engine start. 3. All doors unlocked by wireless operation*.
Condition (6)	1. After approximately 57 seconds, alarm stops sounding and system returns to armed state.

*: Only for vehicles with transmitter.

3. PASSIVE ARMING MODE

Passive arming mode can be switched ON and OFF using the specified method. The theft deterrent system is initially set to active arming mode when vehicles are shipped from factories.

HINT:

- Passive arming mode starts the alarm control after the key is removed from the ignition key cylinder and the doors are closed.
- During passive arming mode, the theft deterrent system goes into the armed state even if the doors are not locked.
- Even if the theft deterrent system detects that a door is opened during passive arming mode, the system does not go into the alarm sounding state immediately because an entry delay time is set.
- If either of the following conditions is met during passive arming mode, the theft deterrent system switches to active arming mode.
  - With all the doors and the engine hood closed, all the doors are locked by the key operation.

– With the engine hood closed and all the doors locked with any door still open, the open door is closed.

- This system activates as described in the diagram below when one item for each condition is met.

(a) Passive arming mode

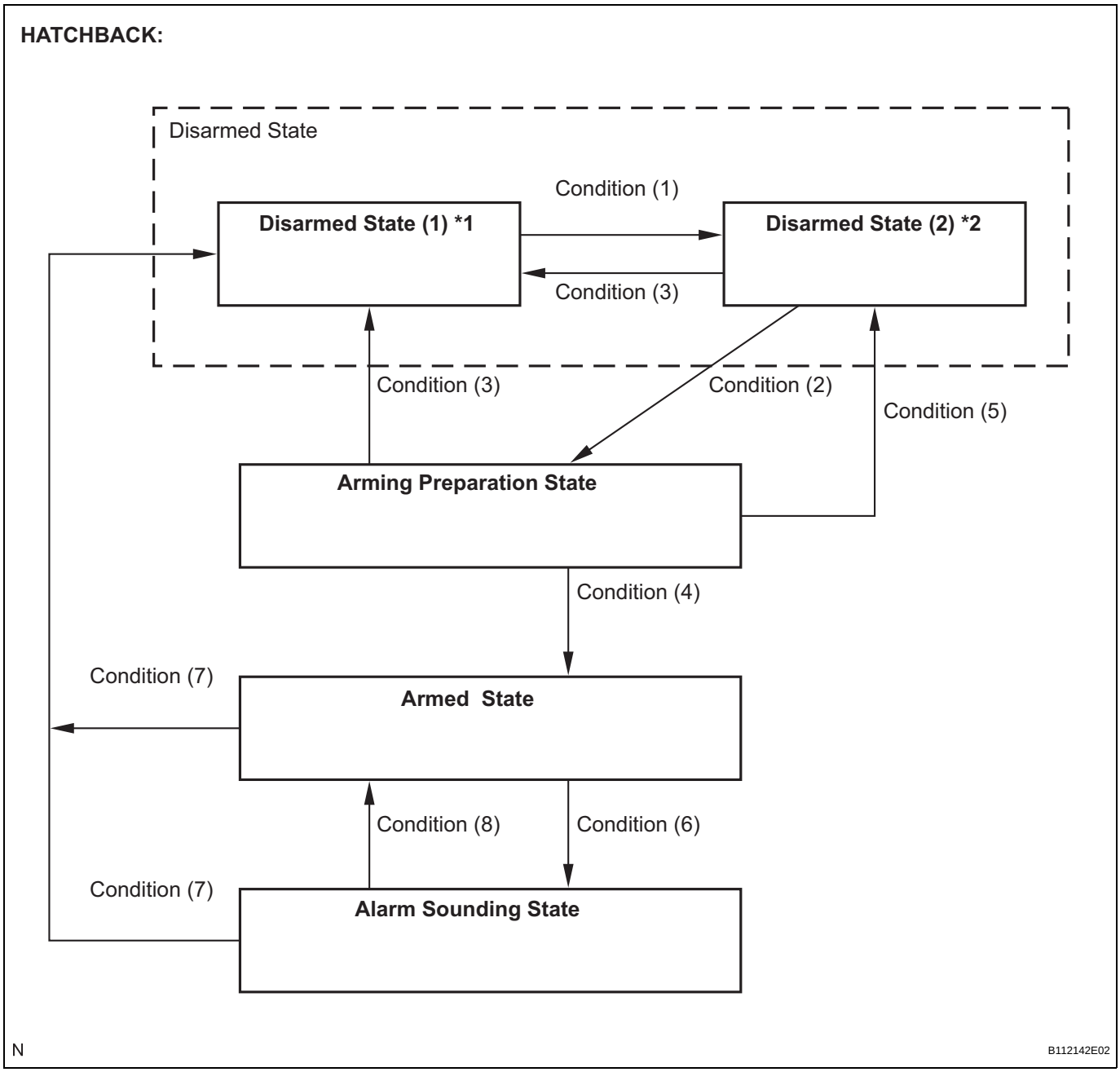

- *1: Disarmed state (1) is the normal disarmed state.
- *2: Disarmed state (2) is set from either the disarmed state (1) or the arming preparation state.

HINT:
The terms "all doors", "any door" and "door" below include the back door.

Hatchback:

Condition	Item
Condition (1)	1. With ignition switch OFF, any door opened and key removed from ignition key cylinder.
Condition (2)	1. Engine hood and all doors closed.
Condition (3)	One of following operations performed in arming preparation state or disarmed state (2): 1. Key inserted into ignition key cylinder. 2. Battery reconnected. 3. Any door unlocked using key.
Condition (4)	1. Approximately 30 seconds allowed to elapse in arming preparation state.
Condition (5)	1. Any door or engine hood opened.
Condition (6)	One of following operations performed in armed state: 1. Any door opened and entry delay time (see Entry Delay Function) allowed to elapse. 2. Engine hood opened. 3. Battery reconnected. 4. Ignition switch turned on without using key.
Condition (7)	One of following operations performed in armed state or alarm sounding state: 1. Driver door or passenger door unlocked using key*. 2. Key inserted into ignition key cylinder and 2 seconds elapse since engine start.
Condition (8)	1. After approximately 57 seconds, alarm stops sounding and system returns to armed state.

HINT:
*: System does not return to disarmed state if the back door key cylinder is turned to the unlock position using a key.

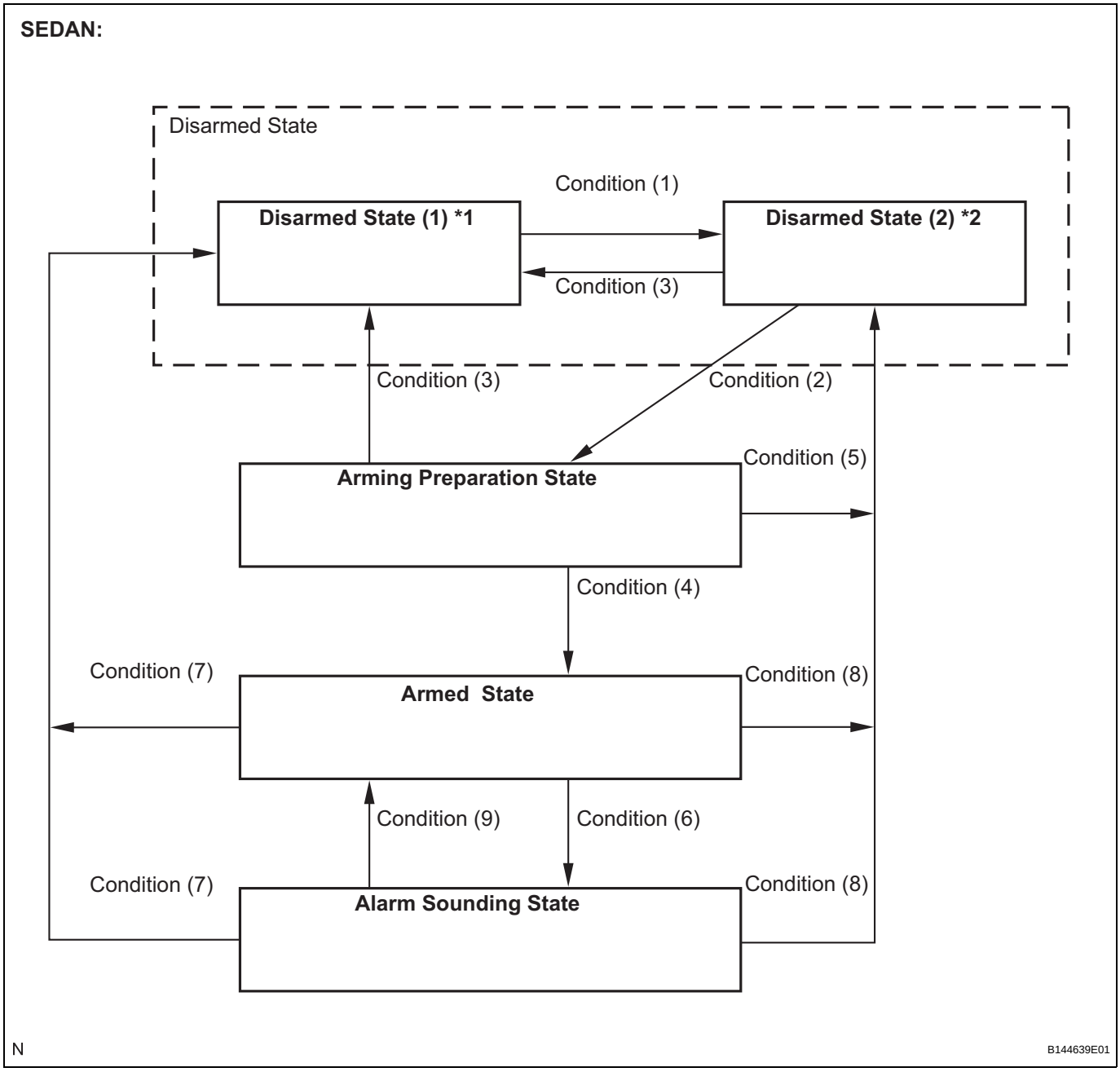

- *1: Disarmed state (1) is the normal disarmed state.
- *2: Disarmed state (2) is set from either the disarmed state (1) or the arming preparation state.

SEDAN:

Condition	Item
Condition (1)	1. With ignition switch OFF, any door opened and key removed from ignition key cylinder.
Condition (2)	1. Engine hood, all doors and luggage compartment door closed.
Condition (3)	One of following operations performed in arming preparation state or disarmed state (2): 1. Key inserted into ignition key cylinder. 2. Battery reconnected. 3. Any door unlocked using key. 4. All doors unlocked using transmitter UNLOCK switch*1.
Condition (4)	1. Approximately 30 seconds allowed to elapse in arming preparation state.
Condition (5)	1. Any door, engine hood or luggage compartment door opened.

Condition	Item
Condition (6)	One of following operations performed in armed state: 1. Any door opened and entry delay time (see Entry Delay Function) allowed to elapse. 2. Engine hood opened. 3. Luggage compartment door opened without using key. 4. Battery reconnected. 5. Ignition switch turned on without using key.
Condition (7)	One of following operations performed in armed state or alarm sounding state: 1. All doors unlocked using transmitter UNLOCK switch*1. 2. Driver door or passenger door unlocked using key*2. 3. Key inserted into ignition key cylinder and 2 seconds elapse since engine start.
Condition (8)	1. Luggage compartment door opened using key.
Condition (9)	1. After approximately 57 seconds, alarm stops sounding and system returns to armed state.

*1: Only for vehicles with transmitter.
*2: System does not return to disarmed state if the luggage compartment door key cylinder is turned to the unlock position using a key.

4. ALARM MEMORY FUNCTION

(a) If the alarm is set off (tampering is detected) while the theft deterrent system is armed, the alarm memory function records it. Whenever the theft deterrent system is canceled, the alarm memory function causes the taillights to light up for 2 seconds in order to indicate that the alarm has been set off.

(1) Conditions of the alarm memory function that cause the taillights to light up:
When the theft deterrent system has entered the alarm sounding state (tampering has been detected), the taillights light up for 2 seconds if either of the following conditions is met.
- Switched to the disarmed state from the armed state during active arming mode.
- Switched to the disarmed state (1) from the armed state during passive arming mode.

HINT:
Active arming mode: See ACTIVE ARMING MODE.
Passive arming mode: See PASSIVE ARMING MODE.

5. SECURITY INDICATOR OUTPUT

(a) The theft warning ECU outputs a signal to light up the security indicator, according to the state of the theft deterrent system. However, some of the actual lighting conditions of the security indicator are different from the output signals of the theft warning ECU.

Output:

Theft Deterrent System Condition*	Security Indicator	
	Output Signals from Theft Warning ECU	Actual Lighting Condition
Disarmed state (1), (2)	OFF	OFF (immobiliser system unset) BLINKING (immobiliser system set)
Arming preparation state	ON	ON
Armed state (During entry delay time)	BLINKING (ON)	BLINKING (ON)

Alarm sounding state	ON	ON

Blinking cycle:

Time	Security Indicator
0.2 seconds	ON
1.8 seconds	OFF

HINT:
- *: The above condition is common to both active arming mode and passive arming mode.
- When the immobiliser system is set, the security indicator blinks in both the disarmed state and the armed state, due to the output signals from the immobiliser system.

6. ENTRY DELAY FUNCTION

(a) When any door is opened while all the doors are closed during passive arming mode, the entry delay time starts. If the switch condition (7) or (8) (see PASSIVE ARMING MODE) is met during the entry delay time, the theft deterrent system will not set off the alarm. However, if the switch condition (7) or (8) is not met, the theft deterrent system will recognize it as a theft and set off the alarm.

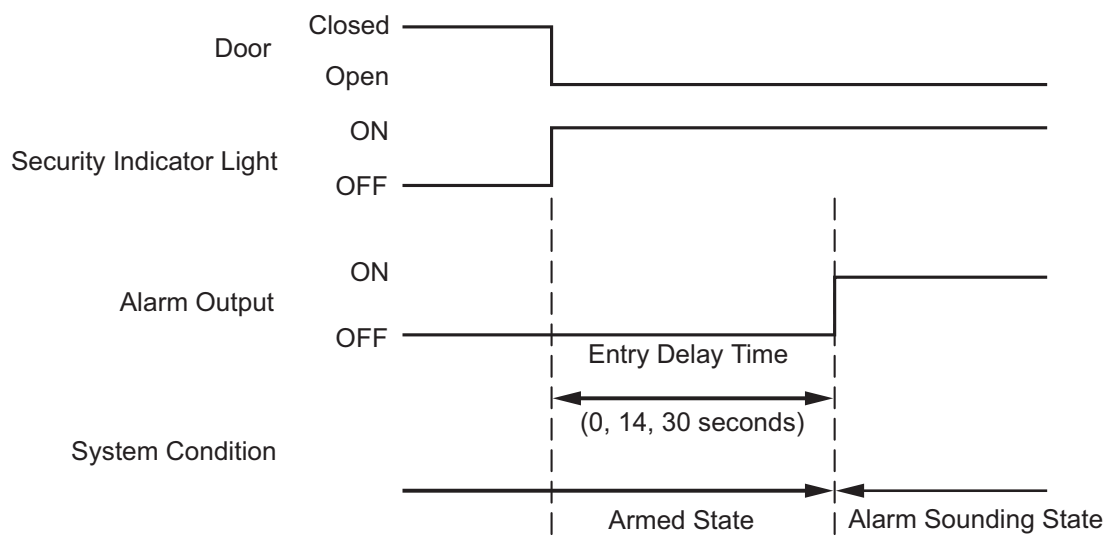

N B110522E02

HINT:
The entry delay time can be selected from among 0, 14, 30 seconds by customizing the setting.

HOW TO PROCEED WITH TROUBLESHOOTING

HINT:
- Use this procedure to troubleshoot the theft deterrent system.
- The intelligent tester should be used in steps 3 and 5.

1 VEHICLE BROUGHT TO WORKSHOP

NEXT

2 INSPECT BATTERY VOLTAGE

Standard voltage:
11 to 14 V

HINT:
If the voltage is below 11 V, recharge or replace the battery before proceeding.

NEXT

3 CHECK FOR DTC

(a) Check for DTCs and note any codes that are output.
(b) Delete the DTCs.
(c) Check whether the same DTCs recur by simulating the conditions indicated by the DTCs noted in step (a) above.
  (1) If no DTCs recur, proceed to A.
  (2) If the same DTCs recur, proceed to B.

B → **Go to step 6**

A

4 PROBLEM SYMPTOMS TABLE

(a) If the fault is not listed in the problem symptoms table, proceed to A.
(b) If the fault is listed in the problem symptoms table, proceed to B.

B → **Go to step 6**

A

5 OVERALL ANALYSIS AND TROUBLESHOOTING

(a) Data list/Active test (See page TD-20)
(b) Terminals of ECU (See page TD-17)
(c) System Description (See page TD-7)

NEXT

6	ADJUST, REPAIR OR REPLACE

NEXT

7	CONFIRMATION TEST

NEXT

END

CUSTOMIZE PARAMETERS

HINT:
The following items can be customized.

NOTICE:

- **After confirming whether the items requested by the customer are applicable or not for customization, perform customizing operations.**
- **Be sure to record the current settings before customization.**
- **When troubleshooting, make sure that the item in question is not set to OFF due to customization. (For example, when the problem is that the wireless function is inoperative, first check whether the wireless function has been set to OFF before troubleshooting.)**

Theft Deterrent System:

Display (Item)	Default	Function	Setting
PASSIVE MODE (Passive Arming Mode)	OFF	In passive arming mode, theft deterrent system switched from arming preparation state to armed state 30 seconds after both of following operations performed. – Key removed from ignition key cylinder – All doors closed (not locked) In passive arming mode, if following operations are not performed within 14 seconds of door being opened while in armed state, theft deterrent system determines that condition as theft and switches to alarm sounding state. – Battery reconnected – Key inserted into ignition key cylinder and ignition switch turned from OFF to ON – Any door unlocked using key	ON/OFF
WARNING (HORN) (Warning horn)	ON	Allows vehicle horn and security horn to be used as warning devices	ON/OFF
ENTRY DELAY (Entry delay time)	14 seconds	Changes entry delay time (time before warning starts) for passive arming mode	0 /14 /30 (seconds)

PROBLEM SYMPTOMS TABLE

HINT:
Use the table below to help determine the cause of the problem symptom. The potential causes of the symptoms are listed in order of probability in the "Suspected Area" column of the table. Check each symptom by checking the suspected areas in the order they are listed. Replace parts as necessary.

TD

Theft Deterrent System

Symptom	Suspected area	See page
Theft deterrent system cannot be set.	Engine hood courtesy switch circuit	TD-25
	Security indicator light circuit	TD-35
	ECU power source circuit	TD-44
	Unlock warning switch circuit	TD-46
	Back door UNLOCK detection switch circuit*1	TD-38
	Luggage compartment door key cylinder switch circuit*2	-
	Theft warning ECU assembly	-
Security indicator light does not blink when theft deterrent system is set.	Security indicator light circuit	TD-35
	Theft warning ECU assembly	-
Theft deterrent system can be set, but does not operate when engine hood is opened.	Engine hood courtesy switch circuit	TD-25
	Theft warning ECU assembly	-
Theft deterrent system can be set, but is not canceled when ignition switch is turned to ACC or ON position.	Ignition switch circuit	TD-32
	Theft warning ECU assembly	-
Theft deterrent system can be set, but still operates when back door is opened with key.	Back door UNLOCK detection switch circuit	TD-38
	Theft warning ECU assembly	-
Theft deterrent system can be set, but still operates when luggage compartment door is opened with key*2.	Luggage compartment door key cylinder switch circuit	TD-41
	Theft warning ECU assembly	-
While theft deterrent system is in warning operation, horns do not sound.	Security horn circuit	TD-28
	Theft warning ECU assembly	-
Horns sound even when theft deterrent system is not set.	Security horn circuit	TD-28
	Theft warning ECU assembly	-

*1: Hatchback
*2: Sedan

TERMINALS OF ECU

1. CHECK THEFT WARNING ECU ASSEMBLY (THEFT DETERRENT ECU)

Theft Warning ECU (Theft Deterrent ECU):

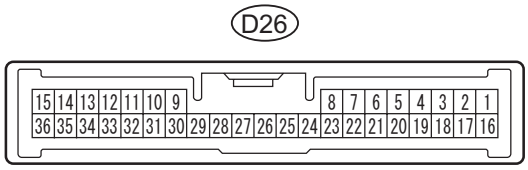

B121323E01

(a) Disconnect the D26 ECU connector.
(b) Check the voltage or resistance of each terminal of the wire harness side connector.

Standard:

Symbols (Terminal No.)	Wiring Color	Terminal Description	Condition	Specified Condition
+B1 (D26-11) - Body ground	B - Body ground	Battery	Always	11 to 14 V
+B2 (D26-13) - Body ground	L*1 - Body ground	Battery	Always	11 to 14 V
	BR*2 - Body ground			
IG (D26-9) - E (D26-16)	GR - W-B	Ignition switch signal	Ignition switch OFF → ON	Below 1 V → 11 to 14 V
LSR (D26-6)*1 - Body ground	O - Body ground	Back door unlock detection switch signal	Back door LOCK → UNLOCK	10 kΩ or higher → Below 1 Ω
LUG (D26-6)*2 - Body ground	P - Body ground	Luggage compartment door unlock detection switch signal	Luggage compartment door LOCK → UNLOCK	10 kΩ or higher → Below 1 Ω
E (D26-16) - Body ground	W-B - Body ground	Ground	Always	Below 1 Ω

*1: Hatchback
*2: Sedan
If the result is not as specified, there may be a malfunction on the wire harness side.

(c) Reconnect the D26 ECU connector.
(d) Check the voltages of each terminal of the connector.

Standard voltage:

Symbols (Terminal No.)	Wiring Color	Terminal Description	Condition	Specified Condition
BRK+ (D26-24) - Body ground	P - Body ground	Alarm BERKES Communication	Theft deterrent system is in alarm sounding state.	Pulse generation (1.5 V ← → Below 1.2 V)
BRK- (D26-25) - Body ground	O - Body ground	Alarm BERKES Communication	All doors are locked using key (Theft deterrent system is in arming preparation state).	Pulse generation (1.5 V ← → Below 1.2 V)
SH- (D26-15) - Body ground	O - Body ground	Security horn	Security horn is sounding (Theft deterrent system is in alarm sounding state).	Pulse generation (11 to 14 V ← → Below 1 V)
+B1 (D26-11) - E (D26-16)	B - W-B	+B power supply	Always	11 to 14 V
KSW (D26-7) - E (D26-16)	Y - W-B	Key unlock warning switch input	Key unlock warning switch ON (Key inserted) → OFF (Key removed from ignition key cylinder)	Below 1 V → 11 to 14 V

Symbols (Terminal No.)	Wiring Color	Terminal Description	Condition	Specified Condition
IND (D26-29) - E (D26-16)	LG*1 - W-B	Security indicator	Security indicator lights up (illuminates for 30 seconds in alarm sounding state, flashes when immobiliser system is operating).	5 V or more
	G*2 - W-B			
DSWH (D26-4) - E (D26-16)	W - W-B	Engine hood courtesy switch input	Engine hood courtesy switch OFF (Closed) → ON (Open)	11 to 14 V → Below 1 V

*1: Hatchback
*2: Sedan
If the result is not as specified, the theft warning ECU assembly may be malfunctioning.

DIAGNOSIS SYSTEM

1. DESCRIPTION

(a) The theft warning ECU controls the functions of the theft deterrent system on the vehicle. Theft deterrent system data can be read through the Data Link Connector 3 (DLC3) of the vehicle. When the system seems to be malfunctioning, use the intelligent tester to check for malfunctions and perform repairs.

2. CHECK DLC3

(a) The ECU uses ISO 15765-4 for communication. The terminal arrangement of the DLC3 complies with SAE J1962 and matches the ISO 15765-4 format.

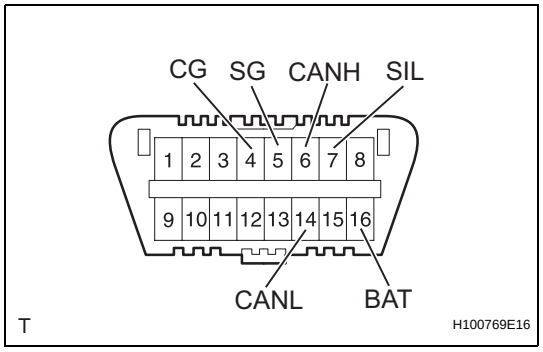

Symbols (Terminal No.)	Terminal Description	Condition	Specified Condition
SIL (7) - SG (5)	Bus "+" line	During transmission	Pulse generation
CG (4) - Body ground	Chassis ground	Always	Below 1 Ω
SG (5) - Body ground	Signal ground	Always	Below 1 Ω
BAT (16) - Body ground	Battery positive	Always	11 to 14 V
CANH (6) - CANL (14)	CAN bus line	Ignition switch OFF*	54 to 69 Ω
CANH (6) - CG (4)	HIGH-level CAN bus line	Ignition switch OFF*	200 Ω or higher
CANL (14) - CG (4)	LOW-level CAN bus line	Ignition switch OFF*	200 Ω or higher
CANH (6) - BAT (16)	HIGH-level CAN bus line	Ignition switch OFF*	6 kΩ or higher
CANL (14) - BAT (16)	LOW-level CAN bus line	Ignition switch OFF*	6 kΩ or higher

NOTICE:
***: Before measuring the resistance, leave the vehicle as is for at least 1 minute and do not operate the ignition switch, any other switches or the doors.**
If the result is not as specified, the DLC3 may have a malfunction. Repair or replace the harness and connector.

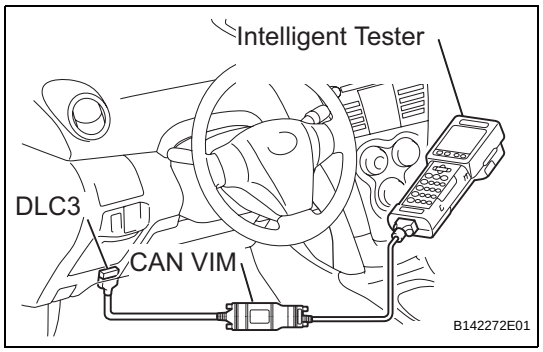

(b) Intelligent tester
HINT:
Connect the cable of the intelligent tester to the CAN VIM, connect the CAN VIM to the DLC3, turn the ignition switch ON and attempt to use the tester. If the display indicates that a communication error has occurred, there is a problem either with the vehicle or with the tester.

- If communication is normal when the tester is connected to another vehicle, inspect the DLC3 of the original vehicle.

- If communication is still not possible when the tester is connected to another vehicle, the problem may be in the tester itself. Consult the Service Department listed in the tester's instruction manual.

3. INSPECT BATTERY VOLTAGE

Standard voltage:

11 to 14 V

If the voltage is below 11 V, recharge or replace the battery before proceeding.

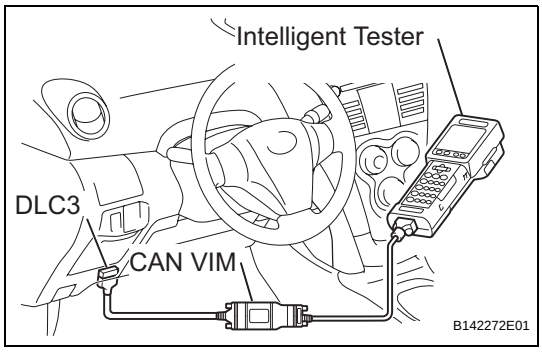

DTC CHECK / CLEAR

1. DTC CHECK

(a) Connect the intelligent tester with CAN VIM to the DLC3.

(b) Turn the ignition switch ON.

(c) Read the DTCs by following the prompts on the tester's screen.

HINT:

Refer to the intelligent tester operator's manual for further details.

2. DTC CLEAR

(a) Connect the intelligent tester with CAN VIM to the DLC3.

(b) Turn the ignition switch ON.

(c) Erase the DTCs by following the prompts on the tester's screen.

HINT:

Refer to the intelligent tester operator's manual for further details.

DATA LIST / ACTIVE TEST

1. DATA LIST

HINT:
Using the intelligent tester DATA LIST allows switch, sensor, actuator and other item values to be read without removing any parts. Reading the DATA LIST early in troubleshooting is one way to shorten labor time.

(a) Connect the intelligent tester with CAN VIM to the DLC3.
(b) Turn the ignition switch ON.
(c) Read the DATA LIST according to the display on the tester.

Theft Warning ECU:

Item	Measurement Item/Display (Range)	Normal Condition	Diagnostic Note
TRUNK KEY UNLK*2	Luggage compartment door unlock detection switch signal/ON or OFF	ON: Luggage compartment door is unlocked OFF: Luggage compartment door is locked	-
HOOD COURTSY SW	Engine hood courtesy switch signal/ON or OFF	ON: Engine hood is open OFF: Engine hood is closed	-
BACK DOOR LOCK*1	Back door unlock detection switch signal/ON or OFF	ON: Back door is locked OFF: Back door is unlocked	-
BACK DOOR UNLOCK*1	Back door unlock detection switch signal/ON or OFF	ON: Back door is unlocked OFF: Back door is locked	-
IG SW	Ignition switch signal/ON or OFF	ON: Key is in ON or START position OFF: Key is in LOCK or ACC position	-
KEY UNLK WRN SW	Unlock warning switch signal/ON or OFF	ON: Key is inserted into ignition key cylinder OFF: Key is removed from ignition key cylinder	-
ALARM TRIGGER	Alarm Trigger	D CRTSY: Alarms are caused by door courtesy light switch D POS: Alarms are caused by door position switch H CRTSY: Alarms are caused by hood courtesy switch L CRTSY: Alarms are caused by back door or luggage compartment door courtesy switch IG SW: Alarms are caused by ignition switch OPEN: Alarms are caused by open circuit NO SIG: No signals	-
PASSIVE MODE	Passive mode/ON or OFF	ON: When switched from active mode OFF: When switched to active mode	-
WARNING(HORN)	Warning by horn/ON or OFF	ON: When switched from armed state to alarm sounding state OFF: When switched from alarm sounding state to armed state or disarmed state	-
ENTRY DELAY	Entry delay time during passive mode	0s: Entry delay time is 0 sec. 14s: Entry delay time is 14 sec. 30s: Entry delay time is 30 sec.	-

*1: Hatchback
*2: Sedan

Main Body ECU:

Item	Measurement Item/Display (Range)	Normal Condition	Diagnostic Note
D DOR CTY SW	Driver side door courtesy switch signal / ON or OFF	ON: Driver side door is open OFF: Driver side door is closed	-
D LOCK POS SW	Driver side door unlock detection switch signal / ON or OFF	ON: Driver side door is unlocked OFF: Driver side door is locked	-
P DOR CTY SW	Passenger side door courtesy switch signal / ON or OFF	ON: Passenger side door is open OFF: Passenger side door is closed	-
P LOCK POS SW	Passenger side door unlock detection switch signal / ON or OFF	ON: Passenger side door is unlocked OFF: Passenger side door is locked	-
BK DOR CTY SW*1	Back door courtesy switch/ON or OFF	ON: Back door is open OFF: Back door is closed	-

Item	Measurement Item/Display (Range)	Normal Condition	Diagnostic Note
LUGG COURTSY SW*2	Luggage compartment door courtesy switch/ON or OFF	ON: Luggage compartment door is open OFF: Luggage compartment door is closed	
ACC SW	ACC switch signal/ON or OFF	ON: Key is in ACC position OFF: Key is in LOCK position	-

*1: Hatchback
*2: Sedan

2. ACTIVE TEST

HINT:
Performing the intelligent tester ACTIVE TEST allows a relay, VSV, actuator and other items to be operated without removing any parts. Performing the ACTIVE TEST early in troubleshooting is one way to shorten the labor time. The DATA LIST can be displayed during the ACTIVE TEST.

(a) Connect the intelligent tester with CAN VIM to the DLC3.
(b) Turn the ignition switch ON.
(c) Perform the ACTIVE TEST according to the instructions on the tester.

Theft Warning ECU:

Item	Test Detail	Diagnostic Note
SECURITY INDIC	Security indicator ON/OFF	-
SECURITY HORN	Security horn ON/OFF	-

Main Body ECU:

Item	Test Detail	Diagnostic Note
HAZARD	Hazard warning light ON/OFF	-
VEHICLE HORN	Vehicle horn ON/OFF	-
TAIL LIGHT	Taillight relay ON/OFF	-
HEAD LIGHT	Headlight relay ON/OFF	-

DIAGNOSTIC TROUBLE CODE CHART

If a malfunction code is displayed during the DTC check, check the circuit listed for that code in the table below and then proceed to the page given for that circuit.

MAIN BODY ECU DIAGNOSTIC TROUBLE CODE CHART

DTC No.	Detection Item	Trouble Area	See page
B1269	Theft Deterrent ECU Communication Stop	1. Wire harness and connector 2. Theft warning ECU assembly	TD-23

DTC	B1269	Theft Deterrent ECU Communication Stop

DESCRIPTION

DTC B1269 is output when the communication between the theft warning ECU (theft deterrent ECU) and the main body ECU stops for more than 10 seconds.

DTC No.	DTC Detection Condition	Trouble Area
B1269	No communication from theft warning ECU for more than 10 seconds.	• Theft warning ECU assembly • Wire harness and connector

TD

WIRING DIAGRAM

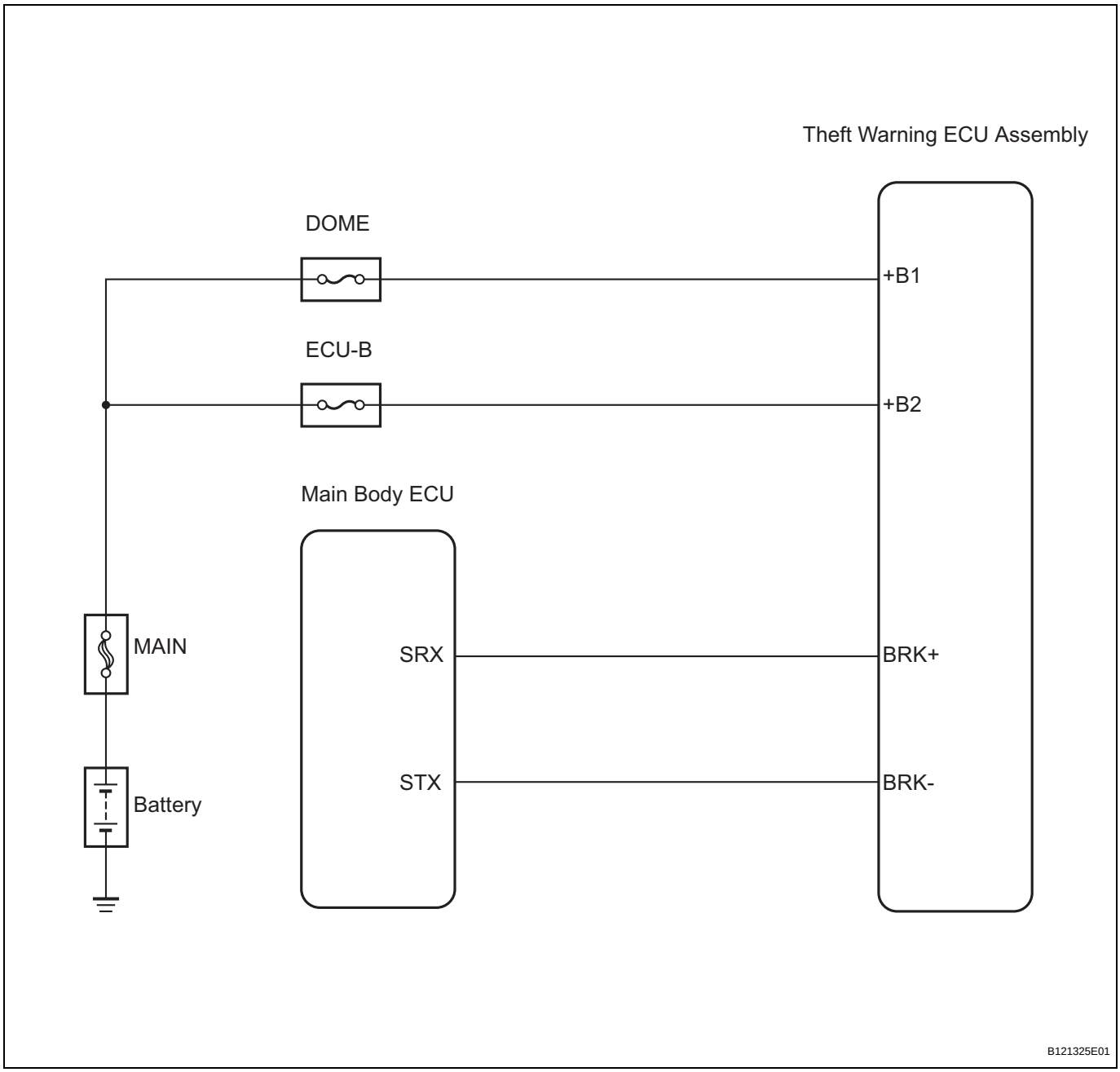

INSPECTION PROCEDURE

1 CHECK HARNESS AND CONNECTOR (THEFT WARNING ECU ASSEMBLY - MAIN BODY ECU)

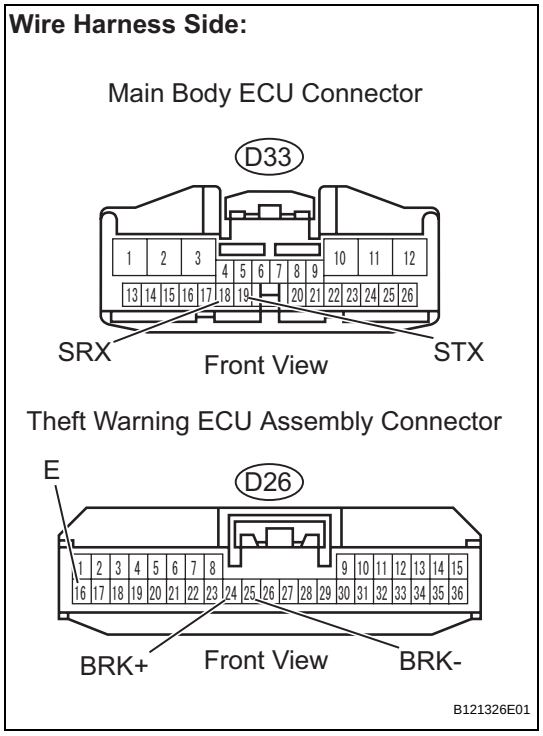

(a) Disconnect the D26 theft warning ECU and D33 main body ECU connectors.

(b) Measure the resistance of the wire harness side connectors.

Standard resistance

Tester Connection	Specified Condition
D26-24 (BRK+) - D33-18 (SRX)	Below 1 Ω
D26-25 (BRK-) - D33-19 (STX)	Below 1 Ω
D26-24 (BRK+) or D33-18 (SRX) - Body ground	10 kΩ or higher
D26-25 (BRK-) or D33-19 (STX) - Body ground	10 kΩ or higher
D26-16 (E) - Body ground	Below 1 Ω

(c) Reconnect the theft warning ECU and main body ECU connectors.

NG → **REPAIR OR REPLACE HARNESS AND CONNECTOR**

OK

2 CHECK HARNESS AND CONNECTOR (BATTERY VOLTAGE)

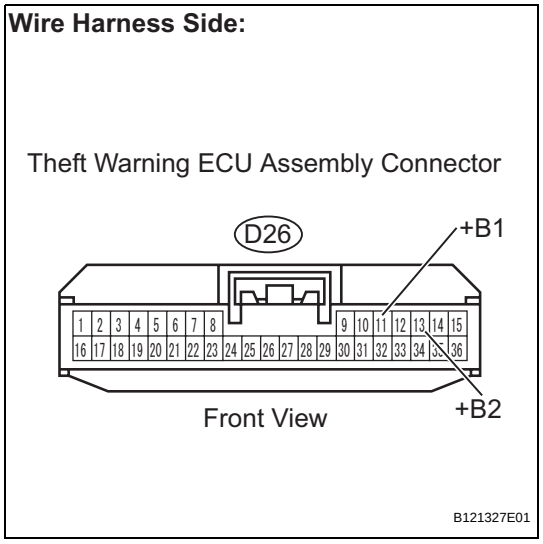

(a) Disconnect the D26 theft warning ECU connector.

(b) Check the voltage between the wire harness side connector and body ground.

Standard voltage

Tester Connection	Specified Condition
D26-11 (+B1) - Body ground	11 to 14 V
D26-13 (+B2) - Body ground	11 to 14 V

(c) Reconnect the theft warning ECU connector.

NG → **REPAIR OR REPLACE HARNESS AND CONNECTOR**

OK

REPLACE THEFT WARNING ECU ASSEMBLY

Engine Hood Courtesy Switch Circuit

DESCRIPTION

The engine hood courtesy switch is built into the engine hood lock assembly. The switch turns on when the engine hood is opened and turns off when the engine hood is closed.

WIRING DIAGRAM

TD

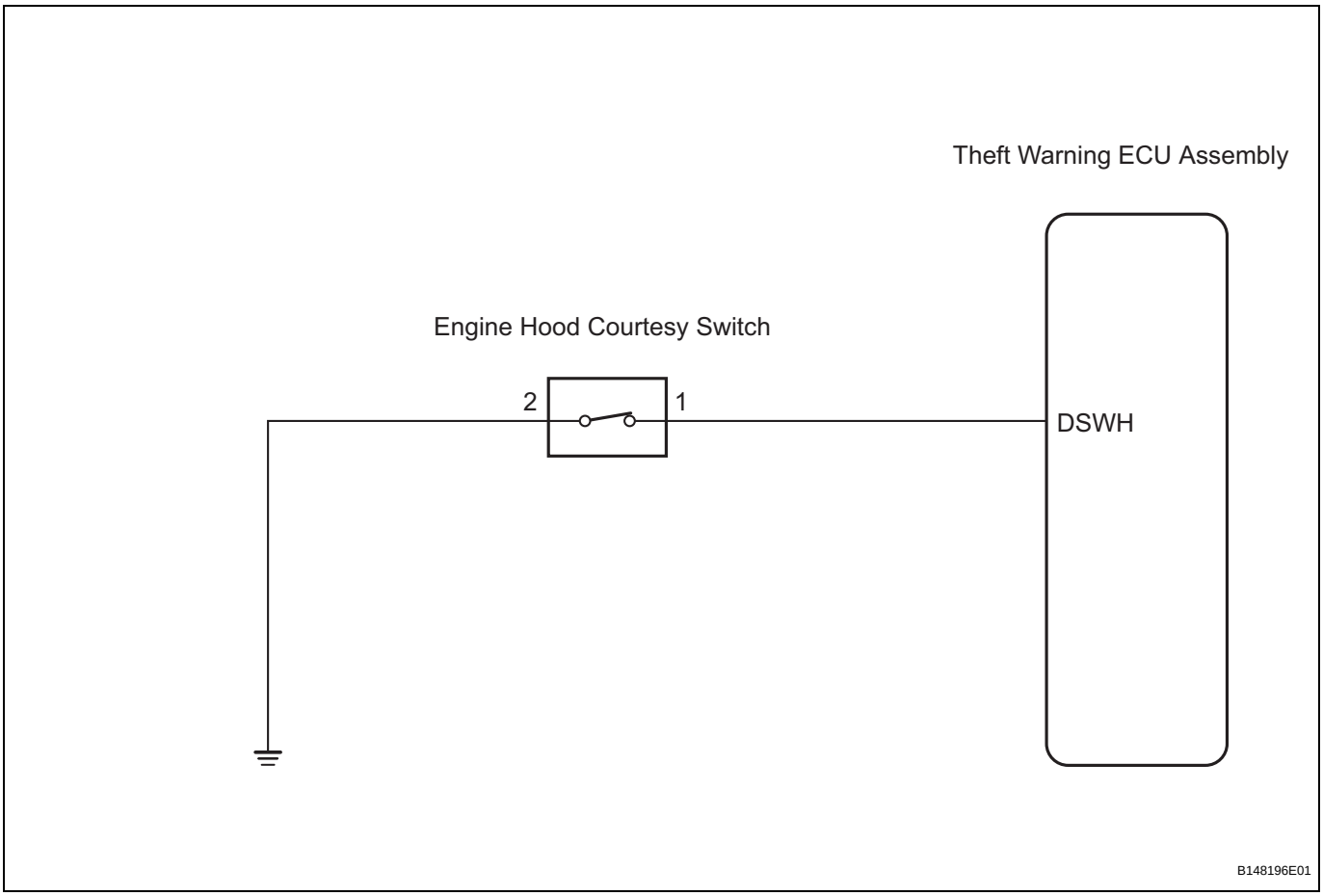

INSPECTION PROCEDURE

1	READ VALUE USING INTELLIGENT TESTER (ENGINE HOOD COURTESY SWITCH)

(a) Connect the intelligent tester with CAN VIM to the DLC3.
(b) Turn the ignition switch ON.
(c) Turn the intelligent tester main switch ON.
(d) Select the item below in the DATA LIST and read the display on the tester.

Theft Warning ECU

Item	Measurement Item/Display (Range)	Normal Condition	Diagnostic Note
HOOD COURTSY SW	Engine hood courtesy switch signal/ON or OFF	ON: Engine hood is OPEN OFF: Engine hood is CLOSED	-

NG → **Go to step 2**

OK

PROCEED TO NEXT CIRCUIT INSPECTION SHOWN IN PROBLEM SYMPTOMS TABLE

2 INSPECT HOOD LOCK ASSEMBLY (ENGINE HOOD COURTESY SWITCH)

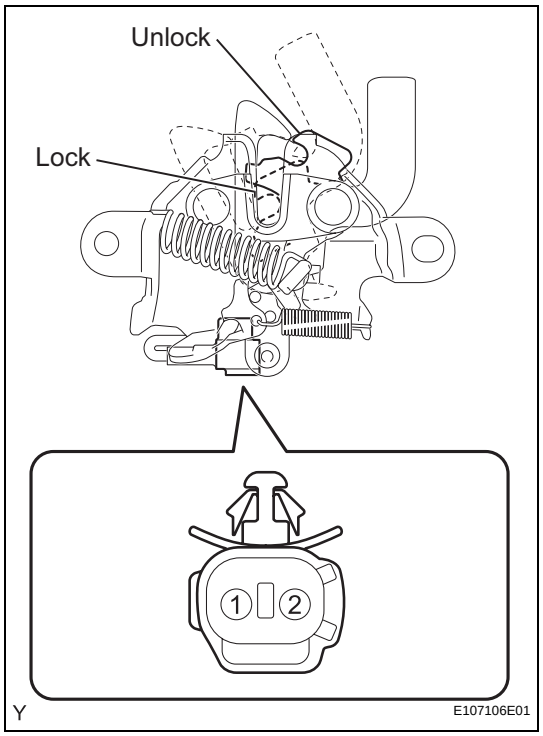

(a) Disconnect the A18 courtesy switch connector.

(b) Check the resistance of the engine hood courtesy switch.

Standard resistance

Tester Connection	Condition	Specified Condition
1 - 2	Lock (OFF)	10 kΩ or higher
1 - 2	Unlock (ON)	Below 1 Ω

(c) Reconnect the courtesy switch connector.

NG → **REPLACE HOOD LOCK ASSEMBLY**

OK

TD

TD

3	CHECK HARNESS AND CONNECTOR (THEFT WARNING ECU ASSEMBLY - ENGINE HOOD COURTESY SWITCH)

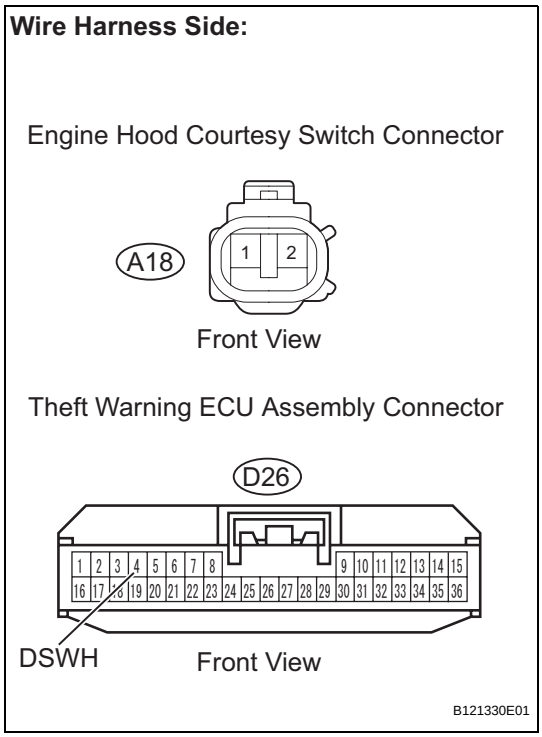

(a) Disconnect the D26 theft warning ECU and A18 engine hood courtesy switch connectors.

(b) Measure the resistance.

Standard resistance

Tester Connection	Specified Condition
D26-4 (DSWH) - A18-1	Below 1 Ω
D26-4 (DSWH) - Body ground	10 kΩ or higher

(c) Reconnect the theft warning ECU and engine hood courtesy switch connectors.

NG → **REPAIR OR REPLACE HARNESS OR CONNECTOR**

OK

4	CHECK HARNESS AND CONNECTOR (ENGINE HOOD COURTESY SWITCH - BODY GROUND)

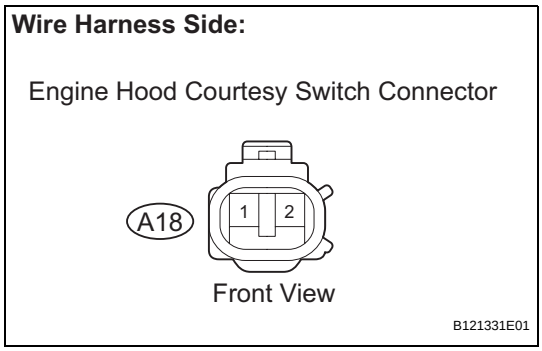

(a) Disconnect the A18 engine hood courtesy switch connector.

(b) Measure the resistance.

Standard resistance

Tester Connection	Specified Condition
A18-2 - Body ground	Below 1 Ω

(c) Reconnect the engine hood courtesy switch connector.

NG → **REPAIR OR REPLACE HARNESS OR CONNECTOR**

OK

REPLACE THEFT WARNING ECU ASSEMBLY

Security Horn Circuit

DESCRIPTION

When the theft deterrent system is changed from the armed state to the alarm sounding state, the theft warning ECU can sound the security horn. The horn cycles between ON and OFF at intervals of approximately 0.4 seconds.

WIRING DIAGRAM

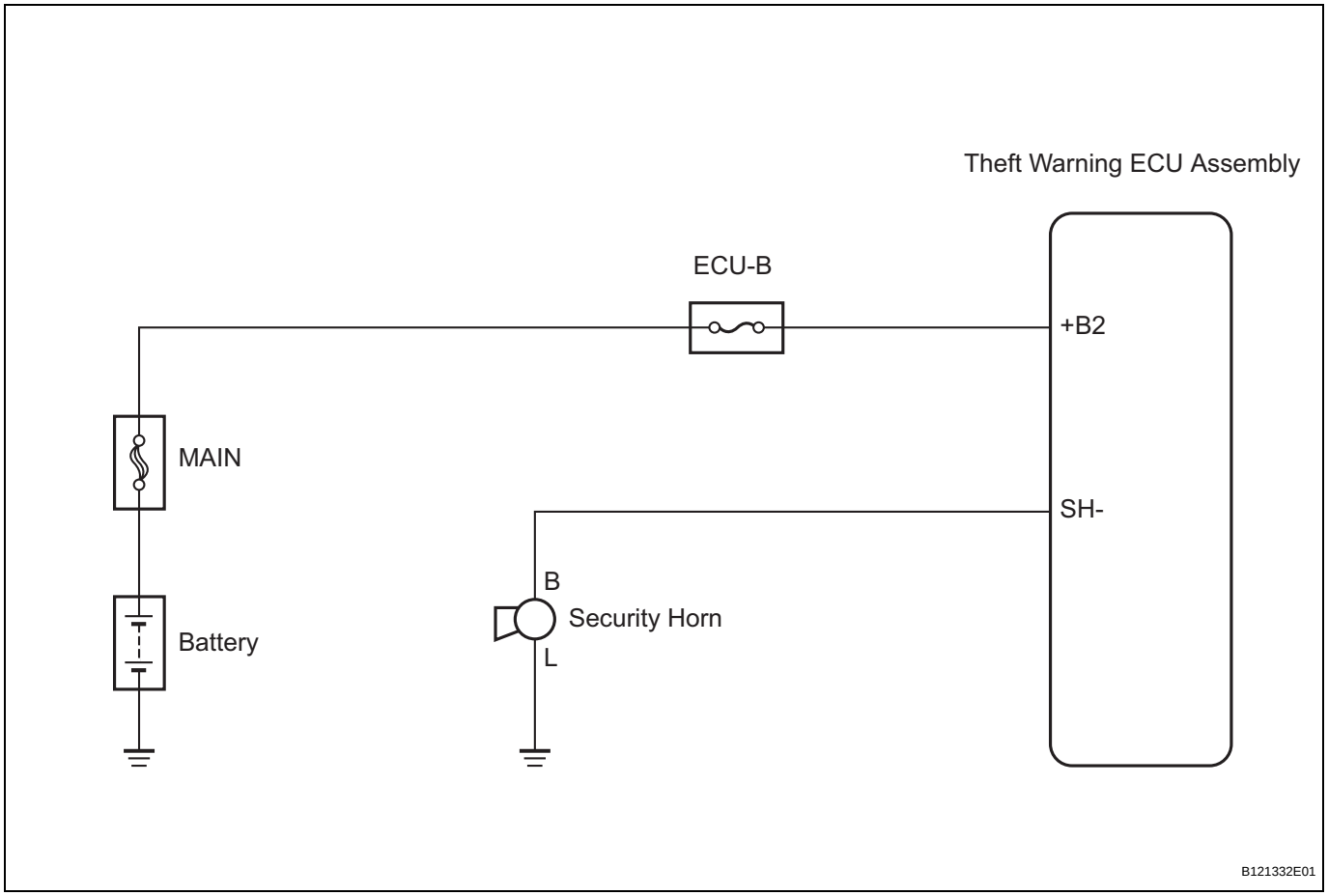

INSPECTION PROCEDURE

1	PERFORM ACTIVE TEST USING INTELLIGENT TESTER (SECURITY HORN)

(a) Connect the intelligent tester with CAN VIM to the DLC3.
(b) Turn the ignition switch ON.
(c) Turn the intelligent tester main switch ON.
(d) Select the item below in the ACTIVE TEST and then check that the horn operates.

Theft Warning ECU

Item	Test Details	Diagnostic Note
SECURITY HORN	Security horn ON/OFF	-

OK:
Security horn operates normally.

NG → **Go to step 2**

OK

PROCEED TO NEXT CIRCUIT INSPECTION SHOWN IN PROBLEM SYMPTOMS TABLE

TD

2 INSPECT FUSE (ECU-B)

Engine Room R/B:

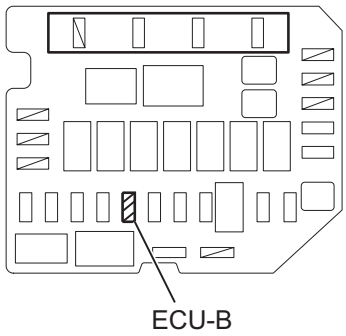

B122728E01

(a) Remove the ECU-B fuse from the engine room R/B.
(b) Measure the resistance.
Standard resistance:
Below 1 Ω
(c) Reinstall the ECU-B fuse.

NG → **REPLACE FUSE**

OK

3 CHECK HARNESS AND CONNECTOR (THEFT WARNING ECU ASSEMBLY- BODY GROUND)

Wire Harness Side:

Theft Warning ECU Assembly Connector

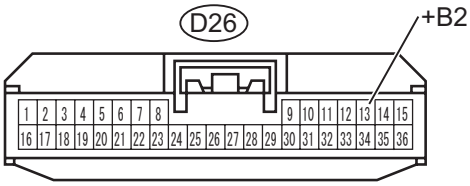

Front View

B121327E10

(a) Disconnect the D26 theft warning ECU connector.
(b) Measure the voltage.
Standard voltage

Tester Connection	Specified Condition
D26-13 (+B2) - Body ground	11 to 14 V

(c) Reconnect the theft warning ECU connector.

NG → **REPAIR OR REPLACE HARNESS OR CONNECTOR**

OK

4 INSPECT SECURITY HORN ASSEMBLY

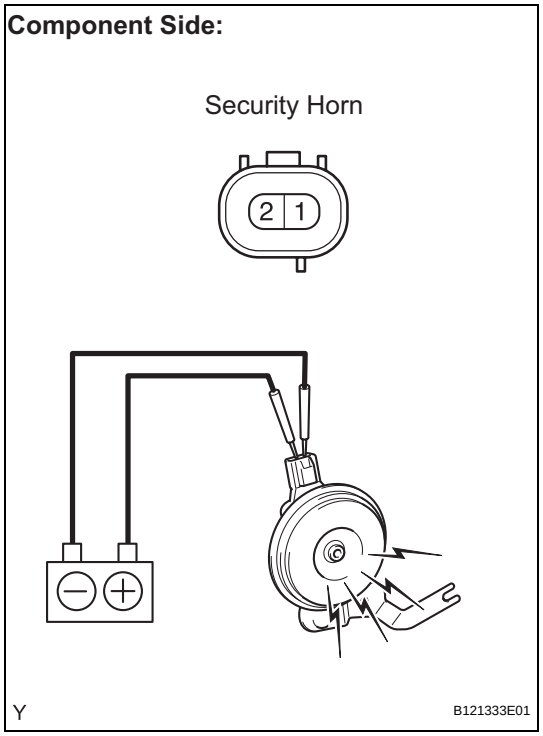

(a) Disconnect the A23 security horn connector.
(b) Check the operation of the security horn.
Standard

Measurement Condition	Specified Condition
Battery positive (+) → Terminal 1 Battery negative (-) → Terminal 2	Security horn sounds

(c) Reconnect the security horn connector.

NG → **REPLACE SECURITY HORN ASSEMBLY**

OK

5 CHECK HARNESS AND CONNECTOR (THEFT WARNING ECU ASSEMBLY - SECURITY HORN ASSEMBLY)

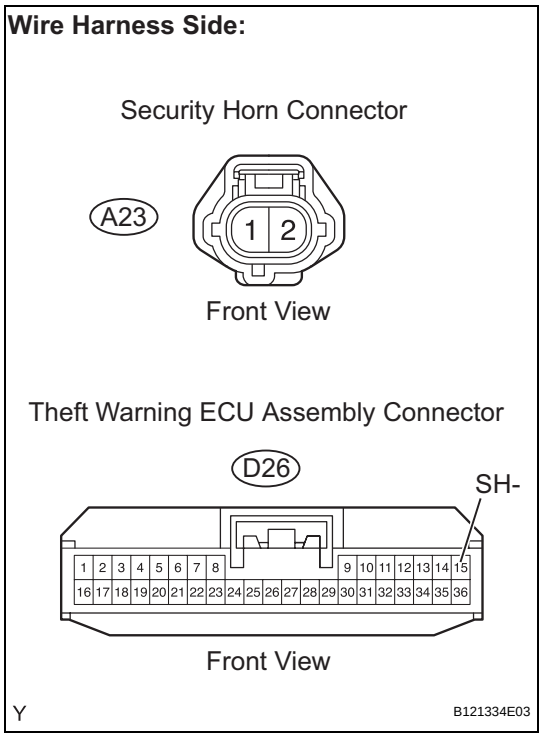

(a) Disconnect the D26 theft warning ECU and the A23 security horn connectors.
(b) Measure the resistance.
Standard resistance

Tester Connection	Specified Condition
D26-15 (SH-) - A23-1	Below 1 Ω
A23-2 - Body ground	Below 1 Ω
D26-15 (SH-) or (A23-1) - Body ground	10 kΩ or higher

(c) Reconnect the theft warning ECU and the security horn connectors.

NG → **REPAIR OR REPLACE HARNESS OR CONNECTOR**

TD

OK

REPLACE THEFT WARNING ECU ASSEMBLY

Ignition Switch Circuit

DESCRIPTION

When the ignition switch is turned to the ON position, the battery positive voltage is applied to terminal IG of the theft warning ECU. When the battery positive voltage is applied to terminal IG of the ECU while the theft deterrent system is operating, the warning stops. Furthermore, the power supplied from terminal IG of the ECU is used as the power for the door courtesy switch and position switch, etc.

WIRING DIAGRAM

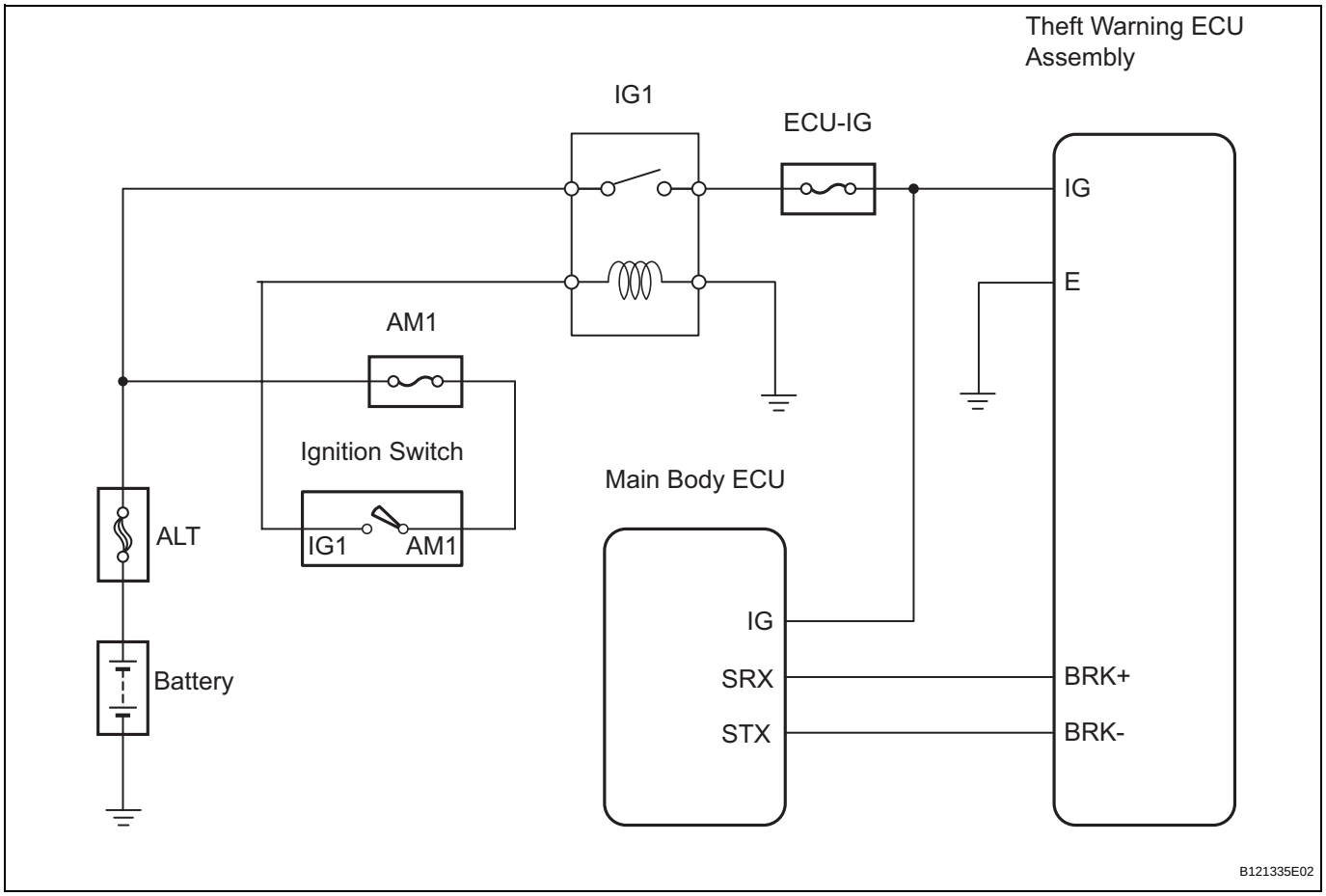

INSPECTION PROCEDURE

1	CHECK FOR DTC

(a) Connect the intelligent tester with CAN VIM to the DLC3.
(b) Turn the ignition switch ON and turn the tester ON.
(c) Clear the DTCs.
(d) Check whether DTC B1269 recurs 10 seconds or more after the ignition switch is turned on.
OK:
No DTC is output.

NG	GO TO DTC CHART

OK

2	READ VALUE USING INTELLIGENT TESTER (IGNITION SWITCH)

(a) Connect the intelligent tester with CAN VIM to the DLC3.
(b) Turn the ignition switch ON.
(c) Turn the intelligent tester main switch ON.
(d) Select the item below in the DATA LIST and read the display on the tester.

TD

Theft Warning ECU

Item	Measurement Item/Display (Range)	Normal Condition	Diagnostic Note
IG SW	Ignition switch signal ON/OFF	ON: Key is in ON or START position OFF: Key is in LOCK or ACC position	-

NG → **Go to step 3**

OK

PROCEED TO NEXT CIRCUIT INSPECTION SHOWN IN PROBLEM SYMPTOMS TABLE

3	INSPECT FUSE (ECU-IG)

Main Body ECU:

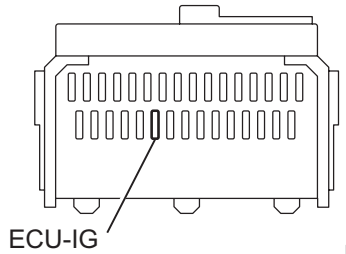

(a) Remove the ECU-IG fuse from the main body ECU.
(b) Measure the resistance.
Standard resistance:
Below 1 Ω
(c) Reinstall the ECU-IG fuse.

NG → **REPLACE FUSE**

OK

4	CHECK HARNESS OR CONNECTOR (IG POWER SOURCE)

Wire Harness Side:

Theft Warning ECU Assembly Connector

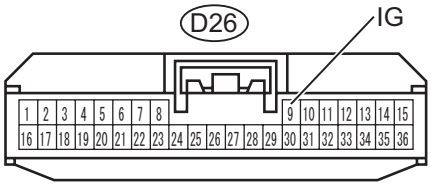

Front View

B121327E03

(a) Disconnect the D26 theft warning ECU connector.
(b) Turn the ignition switch ON.
(c) Measure the voltage.
Standard voltage

Tester Connection	Specified Condition
D26-9 (IG) - Body ground	11 to 14 V

(d) Reconnect the theft warning ECU connector.

NG → **REPAIR OR REPLACE HARNESS OR CONNECTOR**

OK

REPLACE THEFT WARNING ECU ASSEMBLY

TD

Security Indicator Light Circuit

DESCRIPTION

While the theft deterrent system is preparing itself to be set, this circuit lights up the security indicator light. When the system is set, it continuously turns the indicator light on for 0.2 seconds and then turns it off for 1.8 seconds, thus the indicator light blinks.

WIRING DIAGRAM

TD

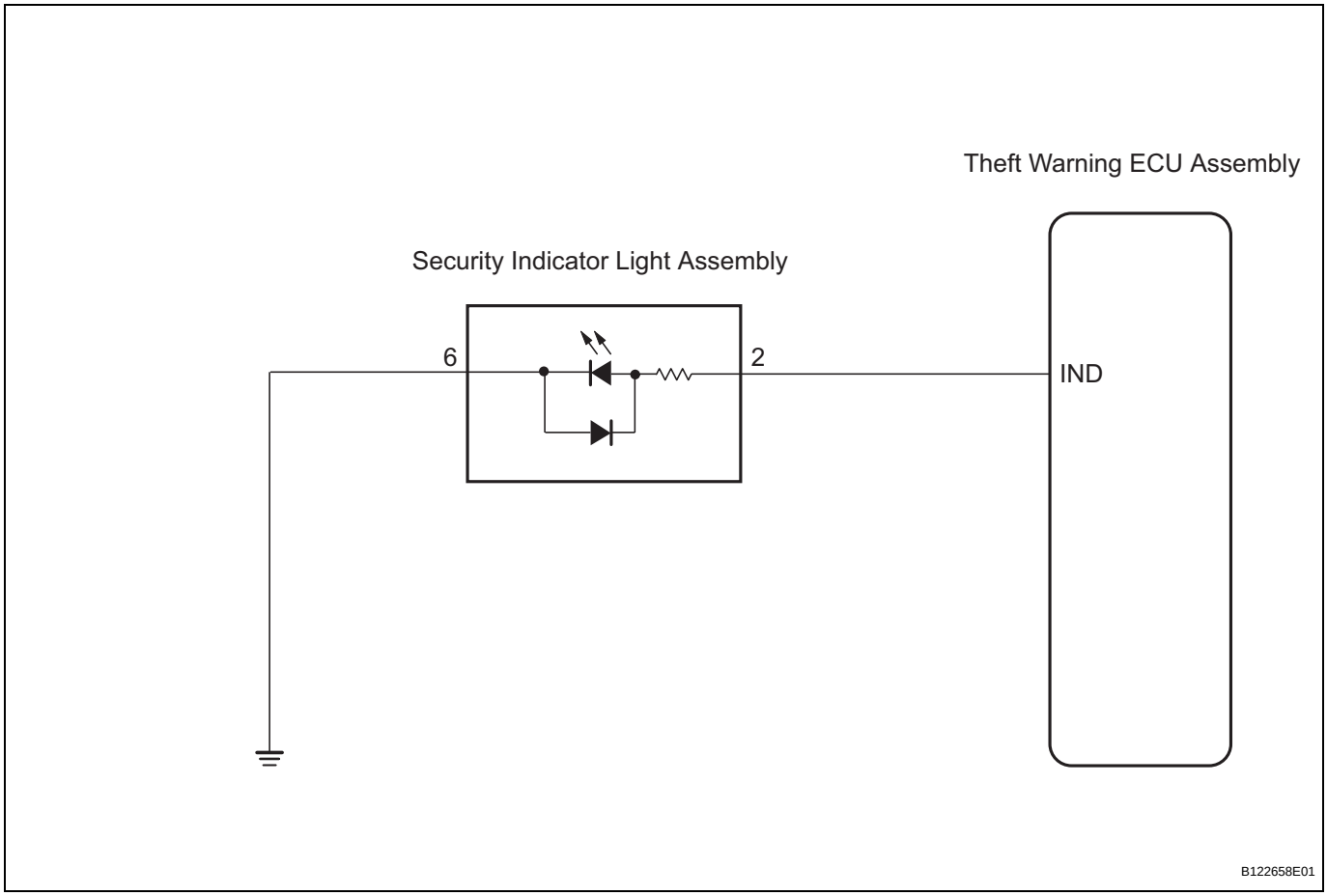

INSPECTION PROCEDURE

1	PERFORM ACTIVE TEST USING INTELLIGENT TESTER (SECURITY INDICATOR LIGHT)

(a) Connect the intelligent tester with CAN VIM to the DLC3.
(b) Turn the ignition switch ON.
(c) Turn the intelligent tester main switch ON.
(d) Select the item below in the ACTIVE TEST and then check that the security indicator operates.

Theft Warning ECU

Item	Test Details	Diagnostic Note
SECURITY INDIC	Security indicator light ON/OFF	-

OK:
The security indicator light turns on and off correctly when it is operated through the intelligent tester.

NG → **Go to step 2**

OK

PROCEED TO NEXT CIRCUIT INSPECTION SHOWN IN PROBLEM SYMPTOMS TABLE

TD

2 CHECK SECURITY INDICATOR LIGHT ASSEMBLY

Component Side:

Security Indicator Light Assembly

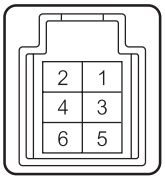

E108193E04

(a) Disconnect the D25 security indicator light connector.
(b) Apply battery voltage to the terminals of the security indicator and check the lighting condition.
Standard

Measurement Condition	Specified Operation
Battery positive (+) - Terminal 2 Battery negative (-) - Terminal 6	Indicator light comes on.

(c) Reconnect the indicator light connector.

NG → **REPLACE SECURITY INDICATOR LIGHT ASSEMBLY**

OK

3 CHECK HARNESS AND CONNECTOR (THEFT WARNING ECU - SECURITY INDICATOR LIGHT ASSEMBLY)

Wire Harness Side:

Security Indicator Light Assembly Connector

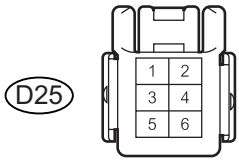

Front View

Theft Warning ECU Assembly Connector

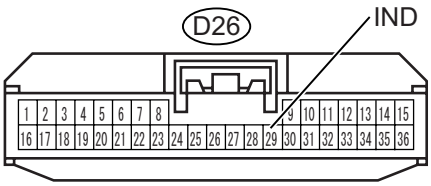

Front View

B122659E01

(a) Disconnect the D26 theft warning ECU and the D25 security indicator light connectors.
(b) Measure the resistance.
Standard resistance

Tester Connection	Specified Condition
D26-29 (IND) - D25-2	Below 1 Ω
D26-29 (IND) - Body ground	10 kΩ or higher

(c) Reconnect the theft warning ECU and the security indicator light connectors.

NG → **REPAIR OR REPLACE HARNESS OR CONNECTOR**

OK

4	CHECK HARNESS AND CONNECTOR (SECURITY INDICATOR LIGHT ASSEMBLY - BODY GROUND)

Wire Harness Side:

Security Indicator Light Assembly Connector

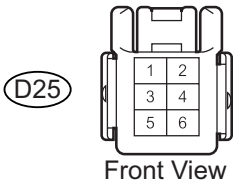

B122660E01

(a) Disconnect the D25 security indicator light connector.
(b) Measure the resistance.
Standard resistance

Tester Connection	Specified Condition
D25-6 - Body ground	Below 1 Ω

(c) Reconnect the security indicator light connector.

NG → **REPAIR OR REPLACE HARNESS OR CONNECTOR**

OK

REPLACE THEFT WARNING ECU ASSEMBLY

Back Door UNLOCK Detection Switch Circuit

DESCRIPTION

The back door unlock detection switch comes on when the back door key cylinder is turned to the unlock position with the key.

WIRING DIAGRAM

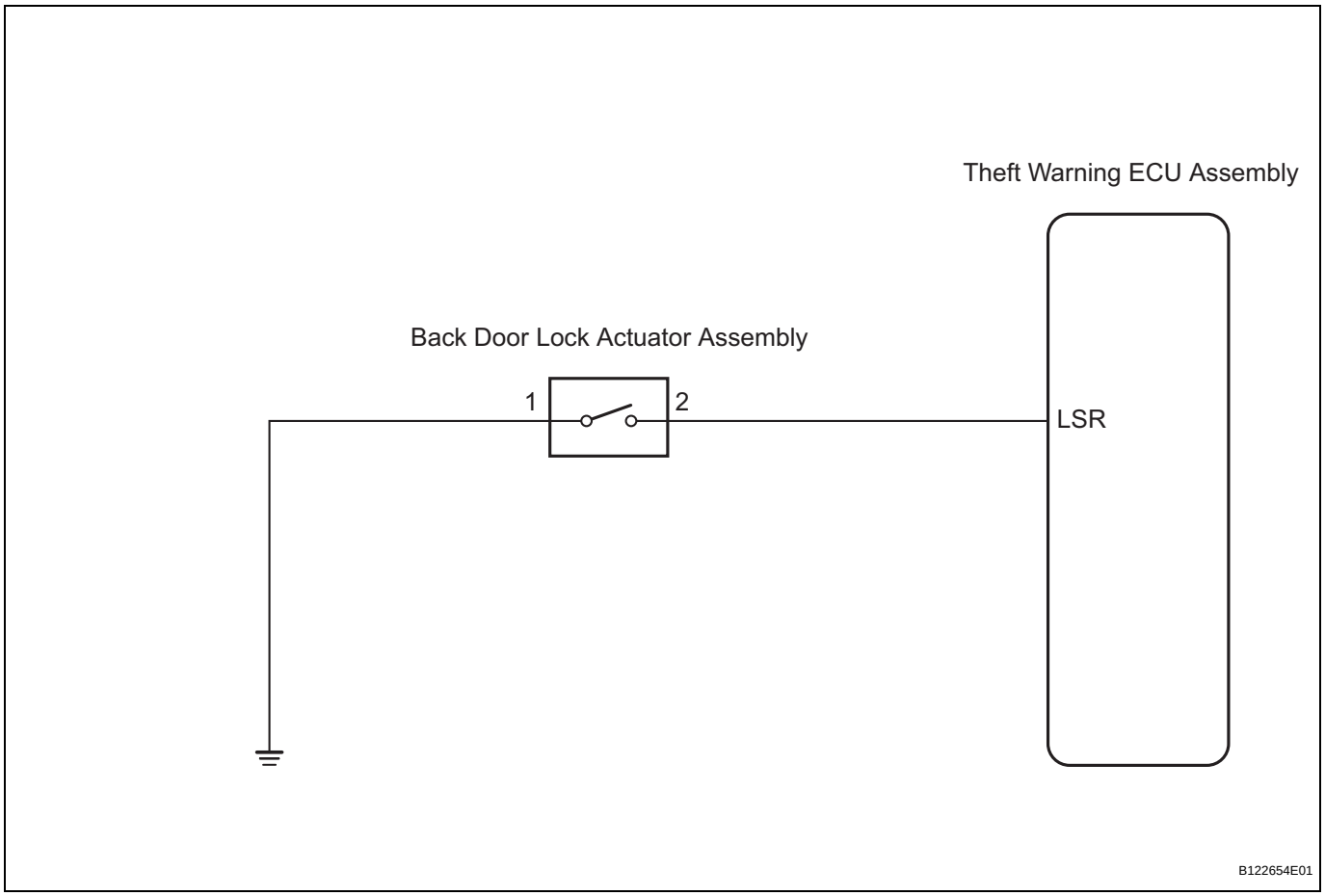

INSPECTION PROCEDURE

1	READ VALUE USING INTELLIGENT TESTER (BACK DOOR UNLOCK DETECTION SWITCH)

(a) Connect the intelligent tester with CAN VIM to the DLC3.
(b) Turn the ignition switch ON.
(c) Turn the intelligent tester main switch on.
(d) Select the item below in the DATA LIST and then read the display on the tester.

Theft Warning ECU

Item	Test Details	Diagnostic Note
BACK DOOR LOCK	Back door unlock detection switch signal OFF	-

OK:

When the back door is locked, "ON" appears on the screen.

TD

Theft Warning ECU

Item	Test Details	Diagnostic Note
BACK DOOR UNLOCK	Back door unlock detection switch signal ON	-

OK:
When the back door is unlocked, "ON" appears on the screen.

HINT:
The theft warning ECU detects the back door lock condition using signals from the back door unlock detection switch. The condition can be displayed as BACK DOOR LOCK or BACK DOOR UNLOCK on an intelligent tester by the theft warning ECU.

NG → **Go to step 2**

OK

PROCEED TO NEXT CIRCUIT INSPECTION SHOWN IN PROBLEM SYMPTOMS TABLE

2 INSPECT BACK DOOR LOCK ACTUATOR ASSEMBLY (UNLOCK DETECTION SWITCH)

Component Side:

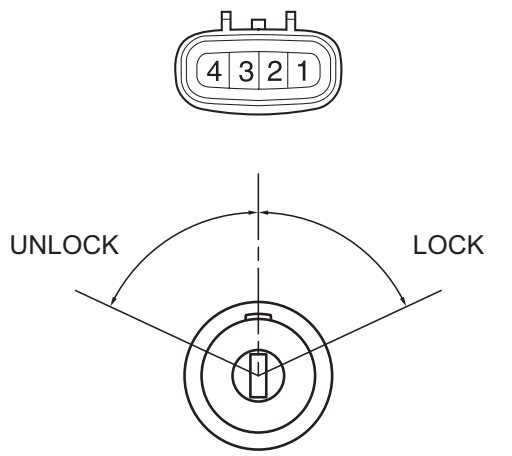

(a) Disconnect the N4 unlock detection switch connector.
(b) Measure the resistance.

Standard resistance

Tester Connection	Condition	Specified Condition
1 - 2	The back door is locked	10 kΩ or higher
1 - 2	The back door is unlocked	Below 1 Ω

(c) Reconnect the unlock detection switch connector.

NG → **REPLACE BACK DOOR LOCK ACTUATOR ASSEMBLY**

OK

3	CHECK HARNESS AND CONNECTOR (THEFT WARNING ECU ASSEMBLY - BACK DOOR LOCK ACTUATOR ASSY)

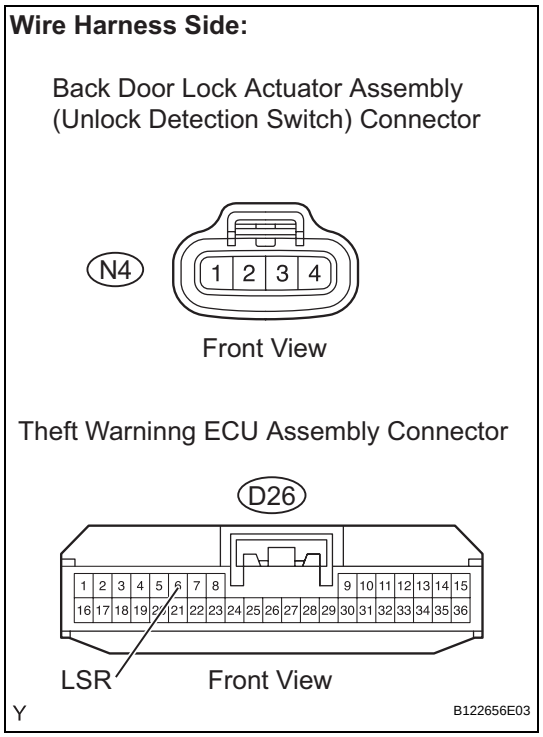

(a) Disconnect the D26 theft warning ECU and the N4 unlock detection switch connectors.
(b) Measure the resistance.

Standard resistance

Tester Connection	Specified Condition
D26-6 (LSR) - N4-2	Below 1 Ω
N4-2 - Body ground	10 kΩ or higher

(c) Reconnect the theft warning ECU and the unlock detection switch connectors.

NG → **REPAIR OR REPLACE HARNESS OR CONNECTOR**

OK

4	CHECK HARNESS AND CONNECTOR (BACK DOOR LOCK ACTUATOR ASSEMBLY - BODY GROUND)

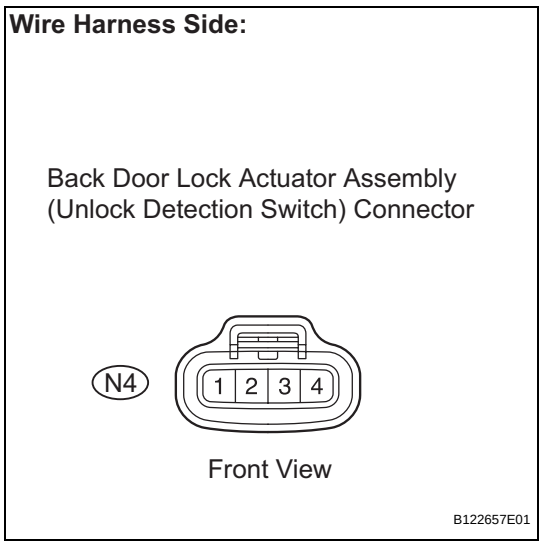

(a) Disconnect the N4 unlock detection switch connector.
(b) Measure the resistance.

Standard resistance

Tester Connection	Specified Condition
N4-1 - Body ground	Below 1 Ω

(c) Reconnect the unlock detection switch connector.

NG → **REPAIR OR REPLACE HARNESS OR CONNECTOR**

OK

REPLACE THEFT WARNING ECU ASSEMBLY

TD

Luggage Compartment Door Key Cylinder Switch Circuit

DESCRIPTION

The luggage compartment door unlock detection switch comes on when the luggage compartment door key cylinder is turned to the unlock position with the key.

WIRING DIAGRAM

TD

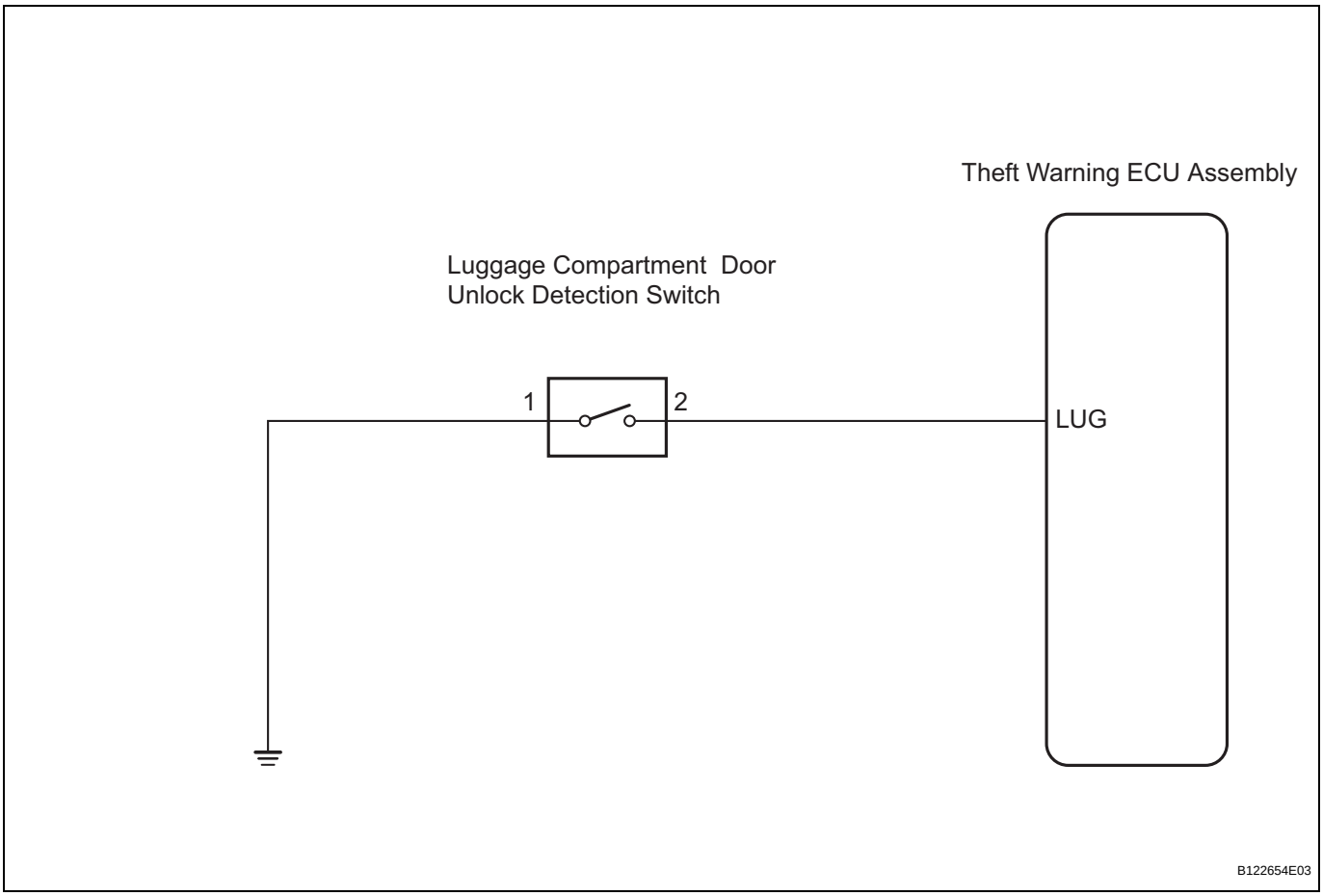

INSPECTION PROCEDURE

1	READ VALUE USING INTELLIGENT TESTER (LUGGAGE COMPARTMENT DOOR UNLOCK DETECTION SWITCH)

(a) Connect the intelligent tester with CAN VIM to the DLC3.
(b) Turn the ignition switch ON.
(c) Turn the intelligent tester main switch ON.
(d) Select the item below in the DATA LIST and then read the display on the tester.

Theft Warning ECU

Item	Test Details	Diagnostic Note
TRUNK KEY UNLK	Luggage compartment door unlock detection switch signal ON	-

OK:
When the luggage compartment door is unlocked, "ON" appears on the screen.

HINT:
The theft warning ECU detects the luggage compartment door lock condition using signals from the luggage compartment door unlock detection switch.

NG → **Go to step 2**

OK

PROCEED TO NEXT CIRCUIT INSPECTION SHOWN IN PROBLEM SYMPTOMS TABLE

TD

2 INSPECT LUGGAGE COMPARTMENT DOOR UNLOCK DETECTION SWITCH

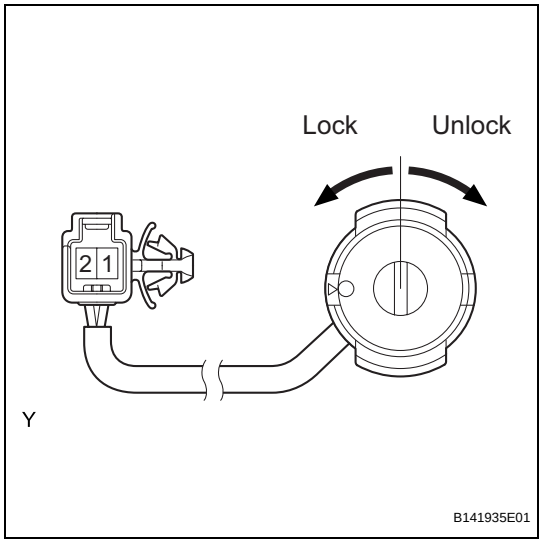

(a) Disconnect the J43 unlock detection switch connector.
(b) Measure the resistance.
Standard resistance

Tester Connection	Condition	Specified Condition
1 - 2	The luggage compartment door is locked	10 kΩ or higher
1 - 2	The luggage compartment door is unlocked	Below 1 Ω

(c) Reconnect the unlock detection switch connector.

NG → **REPLACE LUGGAGE COMPARTMENT DOOR UNLOCK DETECTION SWITCH**

OK

TD

3 CHECK HARNESS AND CONNECTOR (THEFT WARNING ECU - UNLOCK DETECTION SWITCH)

Wire Harness Side:

Luggage Compartment Door Unlock Detection Switch Connector

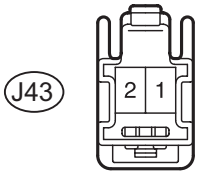

Front View

Theft Warninng ECU Assembly Connector

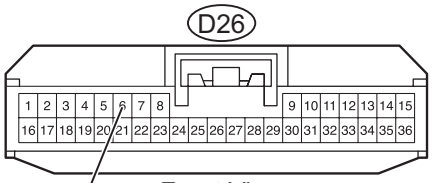

Front View

B144487E01

(a) Disconnect the D26 theft warning ECU and the J43 unlock detection switch connectors.
(b) Measure the resistance.
Standard resistance

Tester Connection	Specified Condition
D26-6 (LUG) - J43-2	Below 1 Ω
D26-6 (LUG) or J43-2 - Body ground	10 kΩ or higher

(c) Reconnect the theft warning ECU and the unlock detection switch connectors.

NG → **REPAIR OR REPLACE HARNESS OR CONNECTOR**

OK

4 CHECK HARNESS AND CONNECTOR (UNLOCK DETECTION SWITCH - BODY GROUND)

Wire Harness Side:

Luggage Compartment Door Unlock Detection Switch Connector

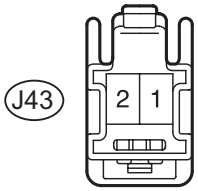

Front View

P

B144427E01

(a) Disconnect the J43 unlock detection switch connector.
(b) Measure the resistance.
Standard resistance

Tester Connection	Specified Condition
J43-1 - Body ground	Below 1 Ω

(c) Reconnect the unlock detection switch connector.

NG → **REPAIR OR REPLACE HARNESS OR CONNECTOR**

OK

REPLACE THEFT WARNING ECU ASSEMBLY

ECU Power Source Circuit

DESCRIPTION

This circuit provides power to operate the theft warning ECU.

WIRING DIAGRAM

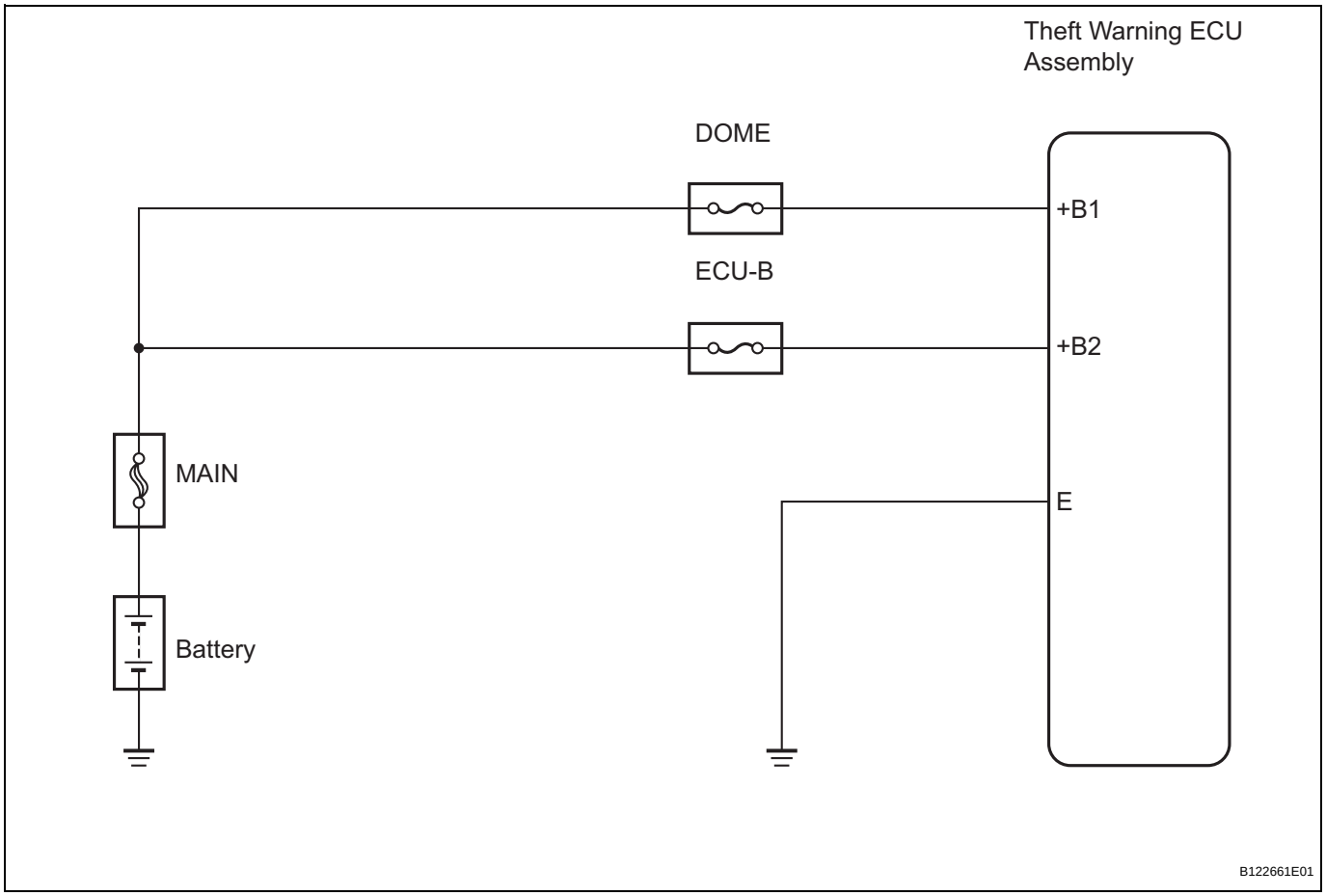

INSPECTION PROCEDURE

1	INSPECT FUSE (ECU-B, DOME)

(a) Remove the ECU-B fuse and DOME fuse from the engine room R/B.
(b) Measure the resistance.
Standard resistance:
Below 1 Ω
(c) Reinstall the fuses.

NG → **REPLACE FUSE**

OK

TD

2 INSPECT THEFT WARNING ECU ASSEMBLY

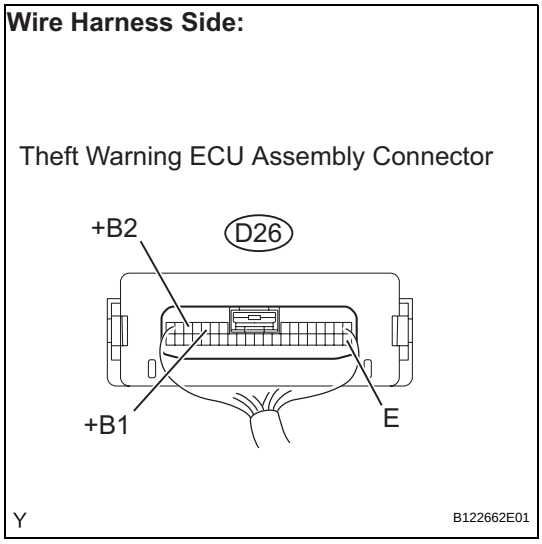

(a) Remove the theft warning ECU assembly without disconnecting the D26 connector.
(b) Measure the voltage.
Standard voltage

Tester Connection	Specified Condition
D26-11 (+B1) - D26-16 (E)	11 to 14 V
D26-13 (+B2) - D26-16 (E)	11 to 14 V

OK → **PROCEED TO NEXT CIRCUIT INSPECTION SHOWN IN PROBLEM SYMPTOMS TABLE**

NG

3 CHECK HARNESS AND CONNECTOR (POWER SOURCE)

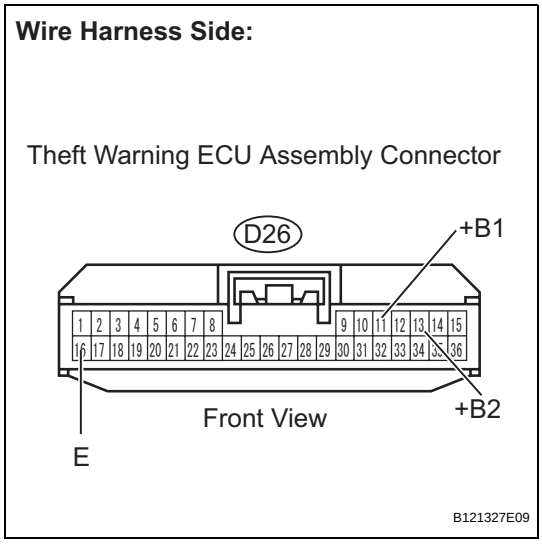

(a) Disconnect the D26 theft warning ECU connector.
(b) Measure the voltage.
Standard voltage

Tester Connection	Specified Condition
D26-11 (+B1) - Body ground	11 to 14 V
D26-13 (+B2) - Body ground	11 to 14 V

(c) Measure the resistance.
Standard resistance

Tester Connection	Specified Condition
D26-16 (E) - Body ground	Below 1 Ω

(d) Reconnect the theft warning ECU connector.

NG → **REPAIR OR REPLACE HARNESS OR CONNECTOR**

OK

REPLACE THEFT WARNING ECU ASSEMBLY

Unlock Warning Switch Circuit

DESCRIPTION

The key unlock warning switch comes on when the ignition key is inserted into the ignition key cylinder and goes off when the ignition key is removed.
The theft warning ECU operates the key confinement prevention function while the key unlock warning switch is on.

WIRING DIAGRAM

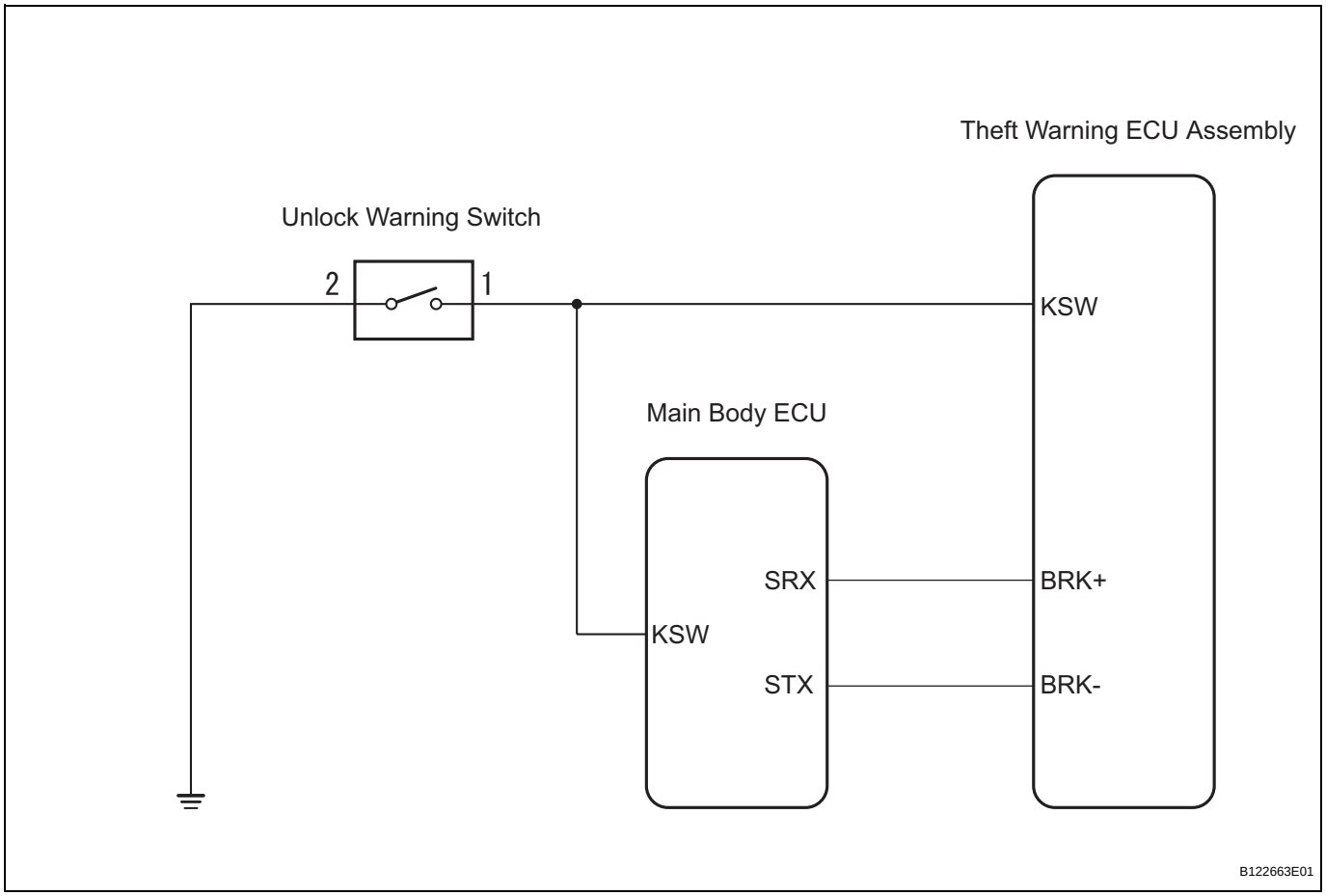

INSPECTION PROCEDURE

1	CHECK FOR DTC

(a) Connect the intelligent tester with CAN VIM to the DLC3.
(b) Turn the ignition switch ON and turn the tester ON.
(c) Clear the DTCs.
(d) Check whether DTC B1269 recurs 10 seconds or more after the ignition switch is turned ON.
OK:
No DTC is output.

NG	GO TO DTC CHART

OK

2	READ VALUE USING INTELLIGENT TESTER (UNLOCK WARNING SWITCH)

(a) Connect the intelligent tester with CAN VIM to the DLC3.
(b) Turn the ignition switch ON.
(c) Turn the intelligent tester main switch ON.
(d) Select the item below in the DATA LIST and then read the display on the tester.

TD

Theft Warning ECU

Item	Measurement Item/Display (Range)	Normal Condition	Diagnostic Note
KEY UNLK WRN SW	Unlock warning switch signal ON/OFF	ON: Key is inserted into ignition key cylinder OFF: Key is removed from ignition key cylinder	-

OK:
When the key is in the ignition key cylinder, "ON" appears on the screen.

NG → **Go to step 3**

OK

PROCEED TO NEXT CIRCUIT INSPECTION SHOWN IN PROBLEM SYMPTOMS TABLE

3	INSPECT UNLOCK WARNING SWITCH ASSEMBLY

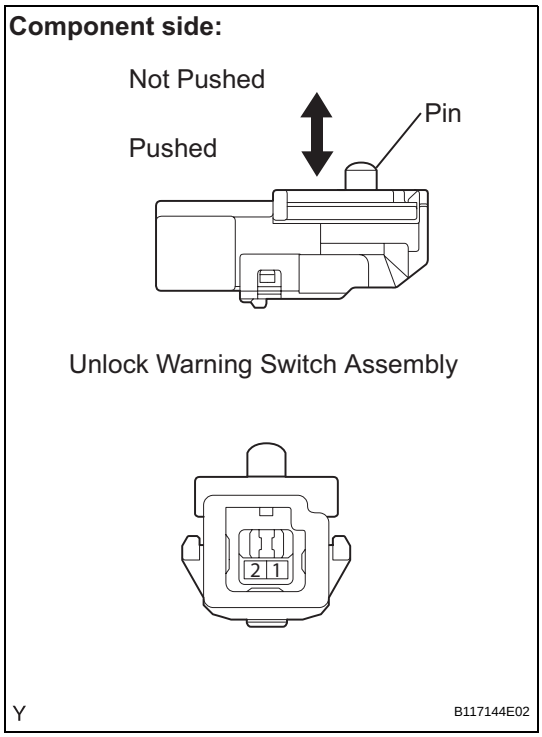

(a) Remove the unlock warning switch assembly.
(b) Measure the resistance.
Standard resistance

Tester Connection	Condition	Specified Condition
1 - 2	Pushed (ON (Key inserted))	Below 1 Ω
1 - 2	Not pushed (OFF (Key removed))	10 kΩ or higher

(c) Reinstall the unlock warning switch assembly.

NG → **REPLACE UNLOCK WARNING SWITCH ASSEMBLY**

OK

4	CHECK HARNESS AND CONNECTOR (THEFT WARNING ECU ASSEMBLY - UNLOCK WARNING SWITCH ASSEMBLY)

Wire Harness Side:

Unlock Warning Switch Assembly Connector

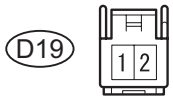

Front View

Theft Warning ECU Assembly Connector

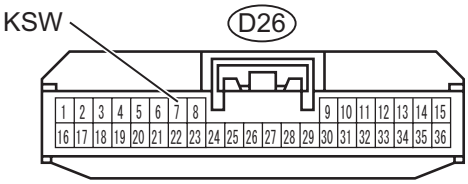

Front View

B122664E01

(a) Disconnect the D26 theft warning ECU and the D19 unlock warning switch connectors.
(b) Measure the resistance.
Standard resistance

Tester Connection	Specified Condition
D26-7 (KSW) - (D19-1)	Below 1 Ω
D26-7 (KSW) - Body ground	10 kΩ or higher

(c) Reconnect the theft warning ECU and the unlock warning switch connectors.

NG → **REPAIR OR REPLACE HARNESS OR CONNECTOR**

OK

5	CHECK HARNESS AND CONNECTOR (UNLOCK WARNING SWITCH ASSEMBLY - BODY GROUND)

Wire Harness Side:

Unlock Warning Switch Assembly Connector

Front View

B122665E01

(a) Disconnect the D19 unlock warning switch connector.
(b) Measure the resistance.
Standard resistance

Tester Connection	Specified Condition
D19-2 - Body ground	Below 1 Ω

(c) Reconnect the unlock warning switch connector.

NG → **REPAIR OR REPLACE HARNESS OR CONNECTOR**

OK

REPLACE THEFT WARNING ECU ASSEMBLY

TD

ENGINE HOOD COURTESY SWITCH (for Sedan)

COMPONENTS

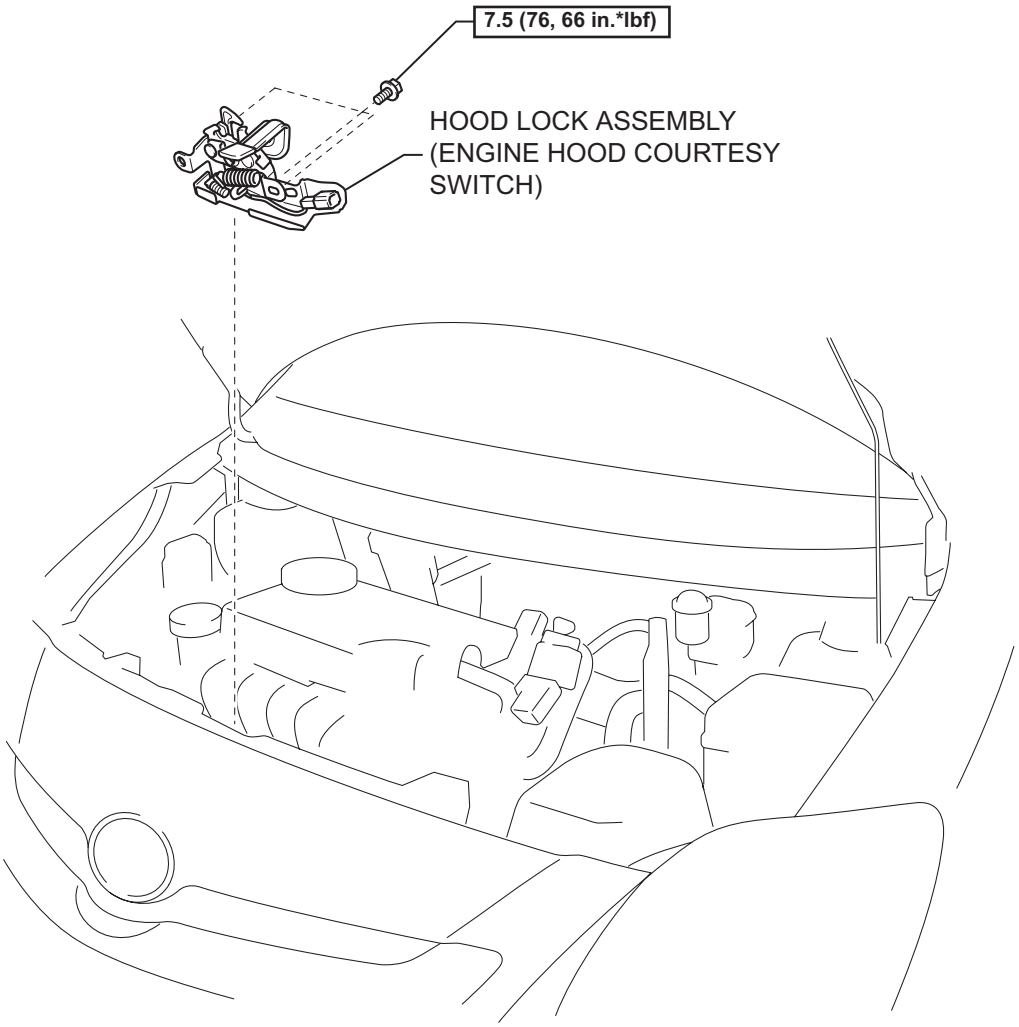

N*m (kgf*cm, ft*lbf) : Specified torque

Y

B141931E01

TD

REMOVAL

1. DISCONNECT CABLE FROM NEGATIVE BATTERY TERMINAL

2. REMOVE HOOD LOCK ASSEMBLY

(a) Disconnect the connector and the harness clamp.

(b) Remove the 3 bolts.

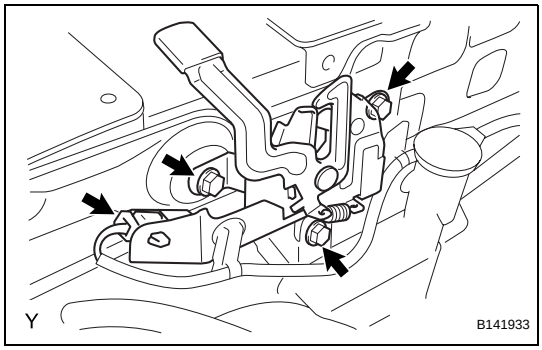

(c) Disconnect the hood lock control cable, then remove the hood lock.

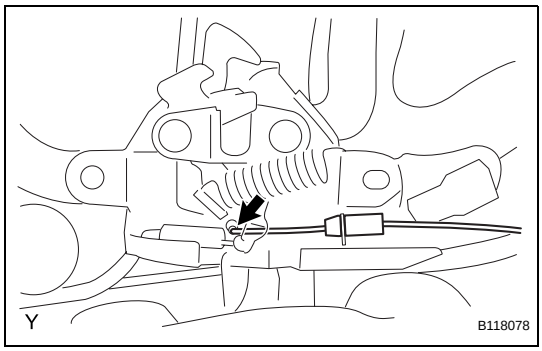

INSPECTION

1. INSPECT HOOD LOCK ASSEMBLY

(a) Check the resistance of the engine hood courtesy switch.

(1) Using an ohmmeter, measure the resistance and check the results in accordance with the value(s) in the table below.

Standard Resistance

Tester Connection	Condition	Specified Condition
1 - 2	Lock	10 kΩ or higher
1 - 2	Unlock	Below 1 Ω

If the results is not as specified, replace the hood lock.

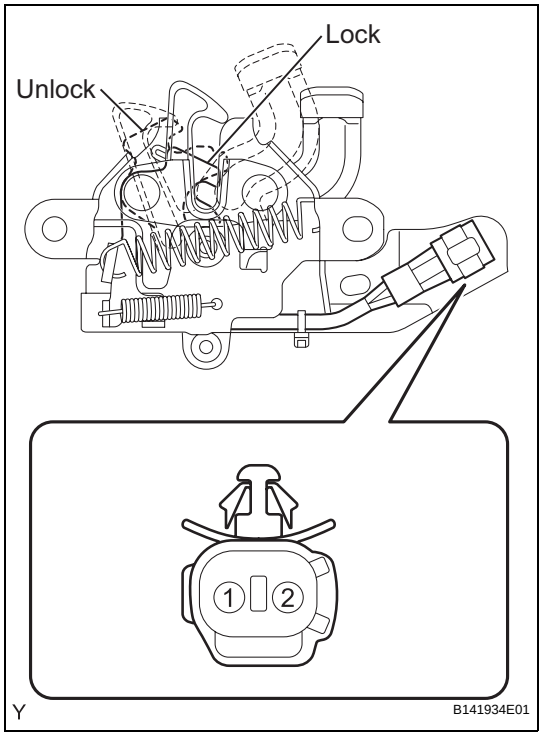

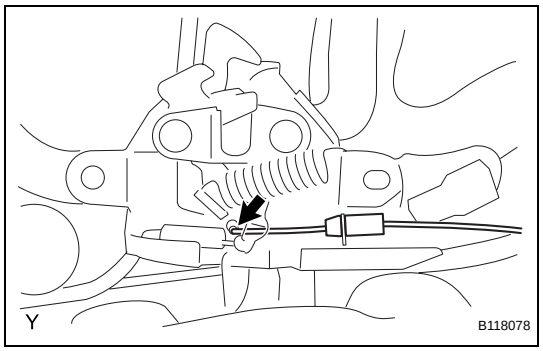

INSTALLATION

1. INSTALL HOOD LOCK ASSEMBLY

(a) Connect the hood lock control cable.

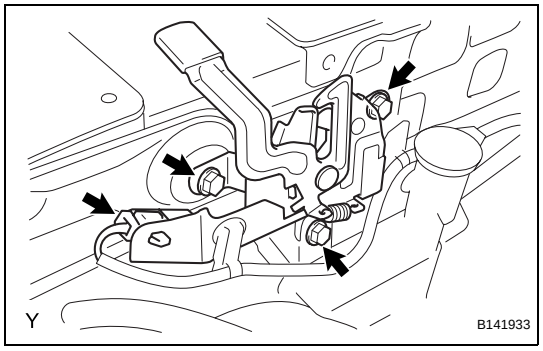

(b) Install the hood lock with the 3 bolts.
Torque: 7.5 N*m (76 kgf*cm, 66 in.*lbf)

(c) Connect the connector and the harness clamp.

2. CONNECT CABLE TO NEGATIVE BATTERY TERMINAL
Torque: 5.4 N*m (55 kgf*cm, 48 in.*lbf)

ENGINE HOOD COURTESY SWITCH (for Hatchback)

COMPONENTS

TD

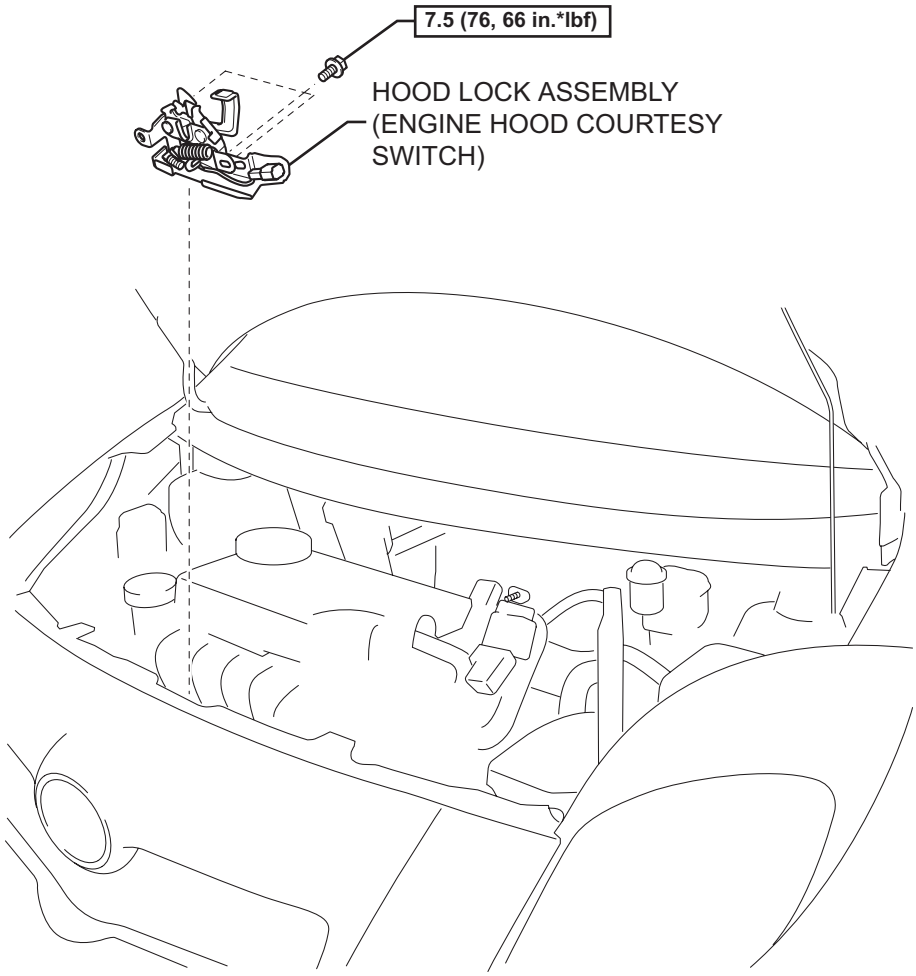

N*m (kgf*cm, ft*lbf) : Specified torque

Y

B118087E01

REMOVAL

1. DISCONNECT CABLE FROM NEGATIVE BATTERY TERMINAL

2. REMOVE HOOD LOCK ASSEMBLY

(a) Disconnect the connector and the harness clamp.

(b) Remove the 3 bolts.

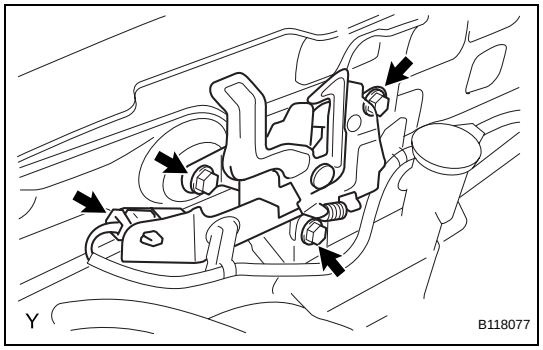

(c) Disconnect the hood lock control cable, then remove the hood lock.

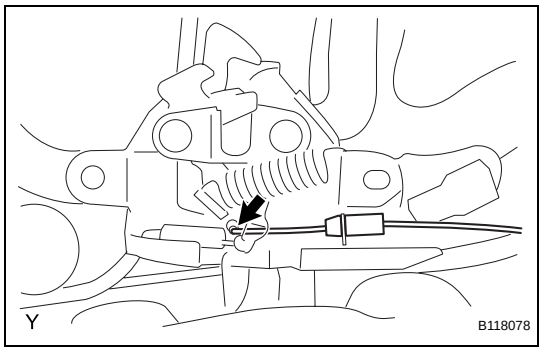

INSPECTION

1. INSPECT HOOD LOCK ASSEMBLY

(a) Check the resistance of the engine hood courtesy switch.

(1) Using an ohmmeter, measure the resistance and check the results in accordance with the value(s) in the table below.

Standard Resistance

Tester Connection	Condition	Specified Condition
1 - 2	Lock	10 kΩ or higher
1 - 2	Unlock	Below 1 Ω

If the results is not as specified, replace the hood lock.

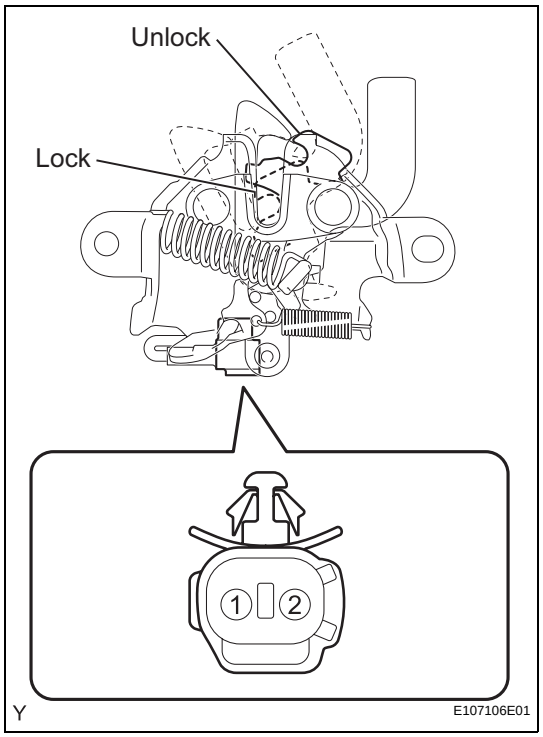

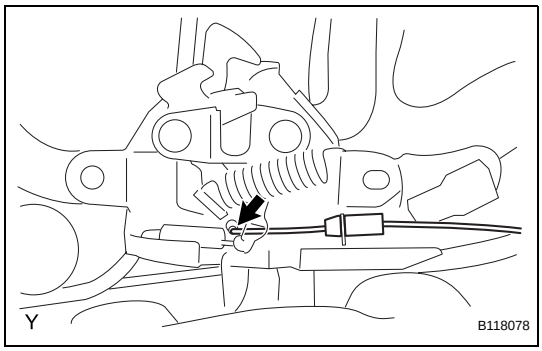

INSTALLATION

1. INSTALL HOOD LOCK ASSEMBLY

(a) Connect the hood lock control cable.

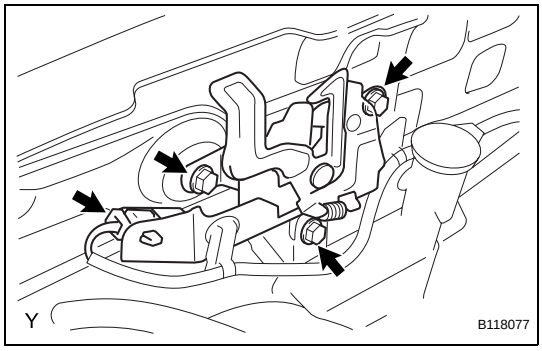

(b) Install the hood lock with the 3 bolts.
Torque: 7.5 N*m (76 kgf*cm, 66 in.*lbf)

(c) Connect the connector and the harness clamp.

2. CONNECT CABLE TO NEGATIVE BATTERY TERMINAL
Torque: 5.4 N*m (55 kgf*cm, 48 in.*lbf)

DOOR UNLOCK SWITCH (for Sedan)

COMPONENTS

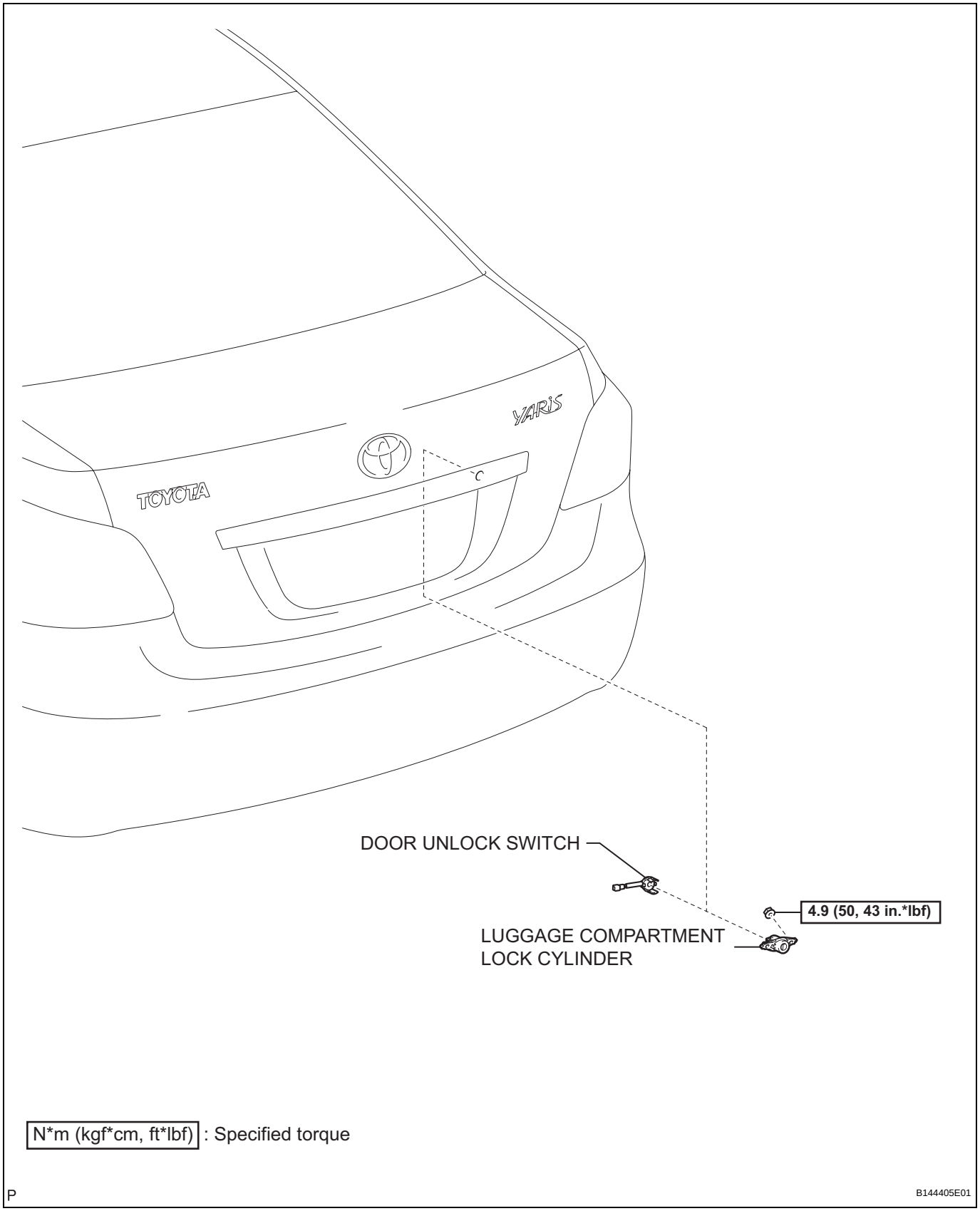

TD

REMOVAL

1. DISCONNECT CABLE FROM NEGATIVE BATTERY TERMINAL

2. REMOVE LUGGAGE COMPARTMENT LOCK CYLINDER

(a) Disconnect the connector.

(b) Disconnect the luggage compartment door lock link, remove the 2 nuts and remove the luggage compartment lock cylinder.

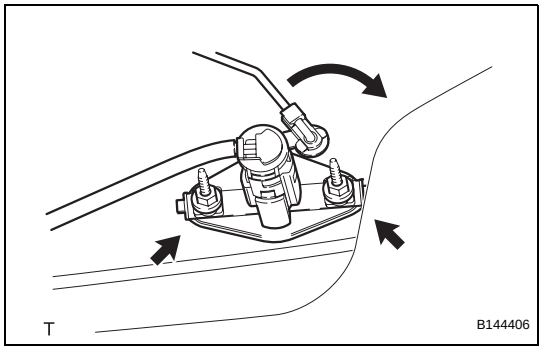

3. REMOVE DOOR UNLOCK SWITCH

(a) Disengage the 2 claws and remove the door unlock switch.

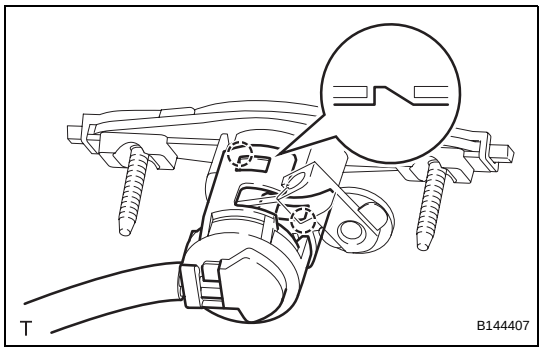

INSPECTION

1. INSPECT DOOR UNLOCK SWITCH

(a) Check the resistance.

(1) Using an ohmmeter, measure the resistance and check the results in accordance with the value(s) in the table below.

Standard Resistance

Tester Connection	Condition	Specified Condition
1 - 2	Locked	10 kΩ or higher
1 - 2	Unlocked	Below 1 Ω

If the result is not as specified, replace the door unlock switch.

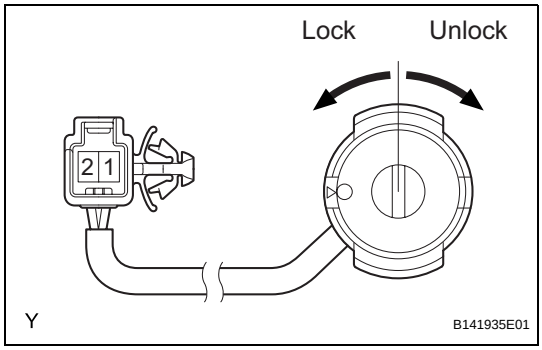

INSTALLATION

1. INSTALL DOOR UNLOCK SWITCH

(a) Engage the 2 claws and install the door unlock switch.

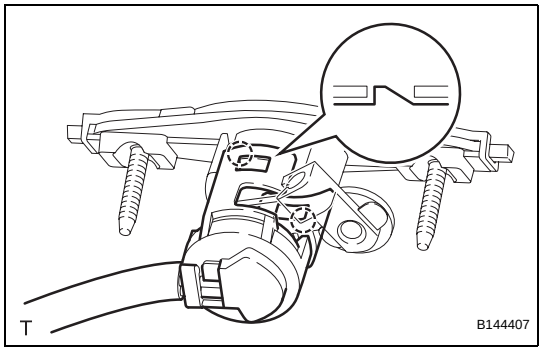

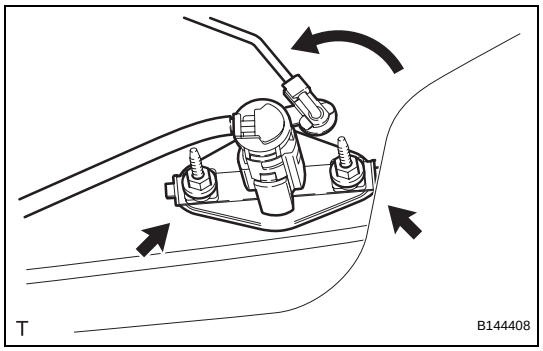

2. INSTALL LUGGAGE COMPARTMENT LOCK CYLINDER

(a) Install the luggage compartment lock cylinder with the 2 nuts.
Torque: 4.9 N*m (50 kgf*cm, 43 in.*lbf)

(b) Connect the luggage compartment door lock link and connector.

3. CONNECT CABLE TO NEGATIVE BATTERY TERMINAL
Torque: 5.4 N*m (55 kgf*cm, 48 in.*lbf)

SECURITY HORN ASSEMBLY (for Sedan)

COMPONENTS

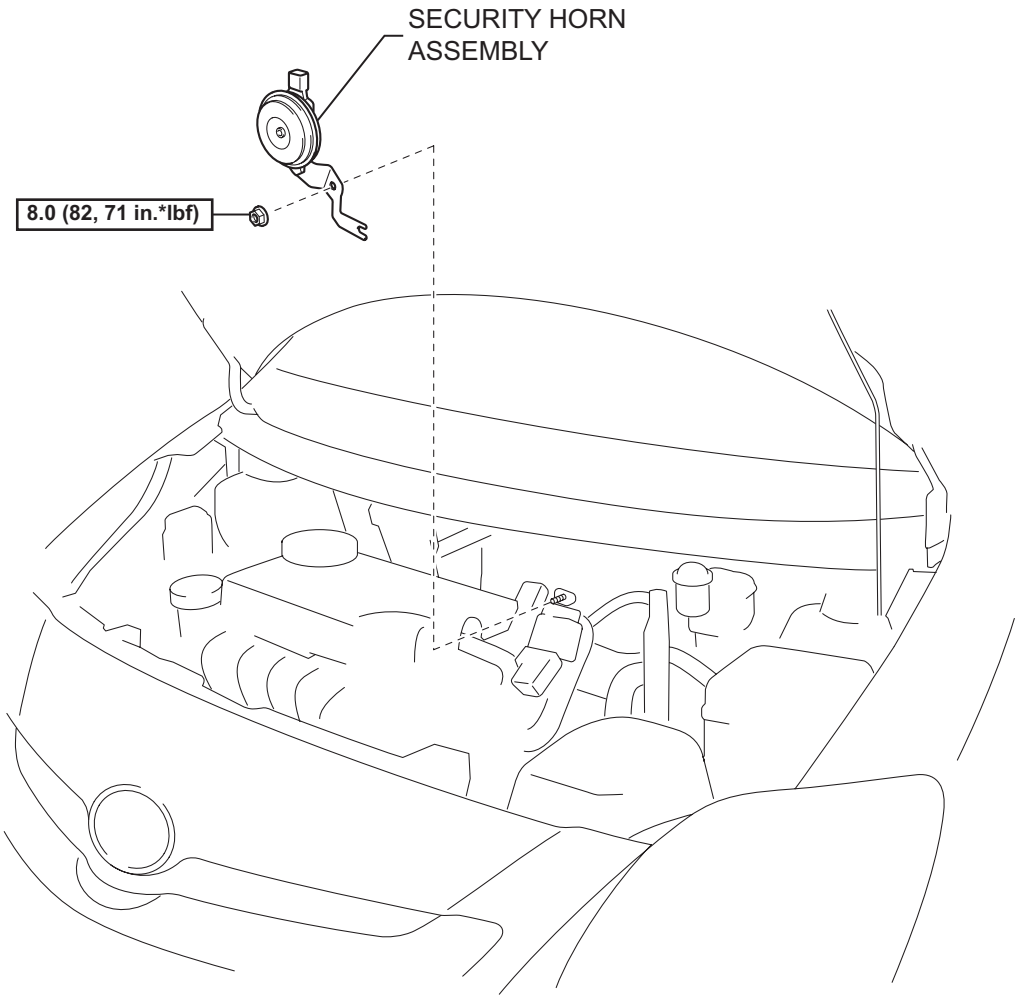

N*m (kgf*cm, ft*lbf) : Specified torque

Y

B141932E01

REMOVAL

1. DISCONNECT CABLE FROM NEGATIVE BATTERY TERMINAL

2. REMOVE SECURITY HORN ASSEMBLY

(a) Disconnect the connector.

(b) Remove the nut and the security horn.

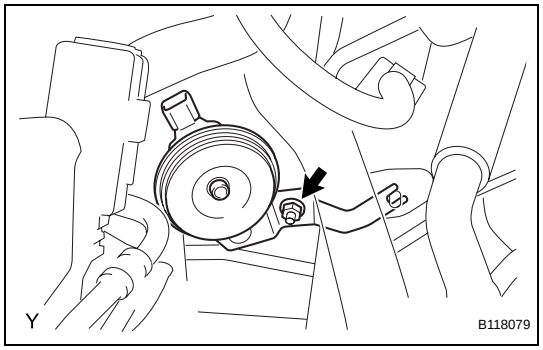

INSPECTION

1. INSPECT SECURITY HORN ASSEMBLY

(a) Check the operation.

(1) Apply battery voltage and check the horn.

Standard

Condition	Specified Operation
Battery positive (+) - Terminal 1 Battery negative (-) - Terminal 2	Horn sounds

If the result is not as specified, replace the horn.

Component Side:

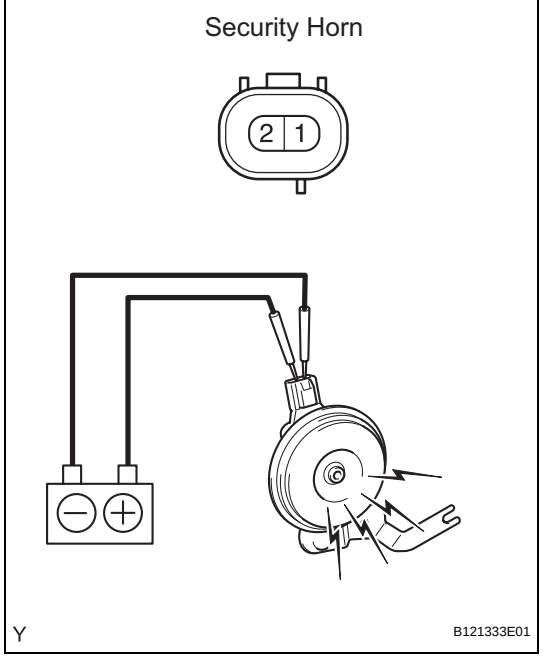

INSTALLATION

1. INSTALL SECURITY HORN ASSEMBLY

(a) Install the security horn with the nut.

Torque: 8.0 N*m (82 kgf*cm, 71 in.*lbf)

(b) Connect the connector.

2. CONNECT CABLE TO NEGATIVE BATTERY TERMINAL

Torque: 5.4 N*m (55 kgf*cm, 48 in.*lbf)

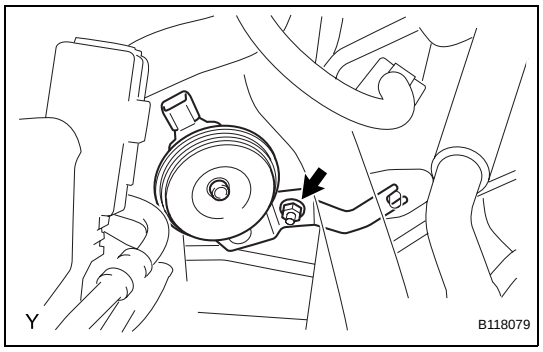

SECURITY HORN ASSEMBLY (for Hatchback)

COMPONENTS

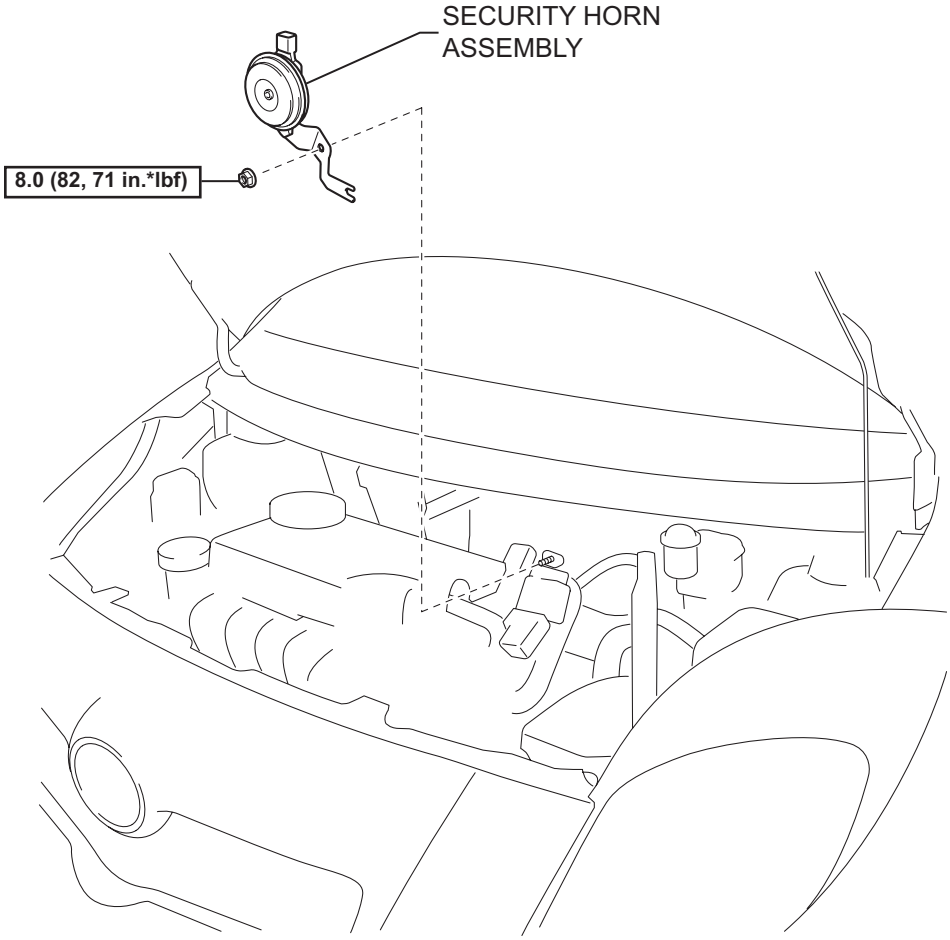

N*m (kgf*cm, ft*lbf) : Specified torque

Y

B118088E01

REMOVAL

1. DISCONNECT CABLE FROM NEGATIVE BATTERY TERMINAL

2. REMOVE SECURITY HORN ASSEMBLY

(a) Disconnect the connector.

(b) Remove the nut and the security horn.

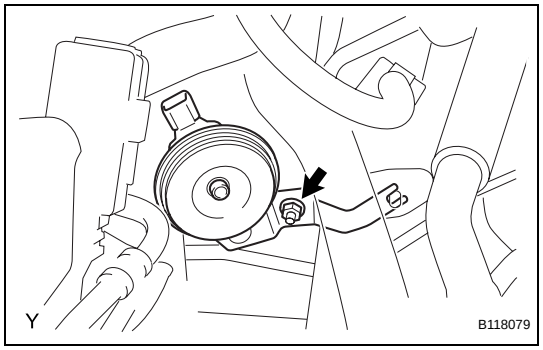

INSPECTION

1. INSPECT SECURITY HORN ASSEMBLY

(a) Check the operation.

(1) Apply battery voltage and check the horn.

Standard

Condition	Specified Operation
Battery positive (+) - Terminal 1 **Battery negative (-) - Terminal 2**	**Horn sounds**

If the result is not as specified, replace the horn.

Component Side:

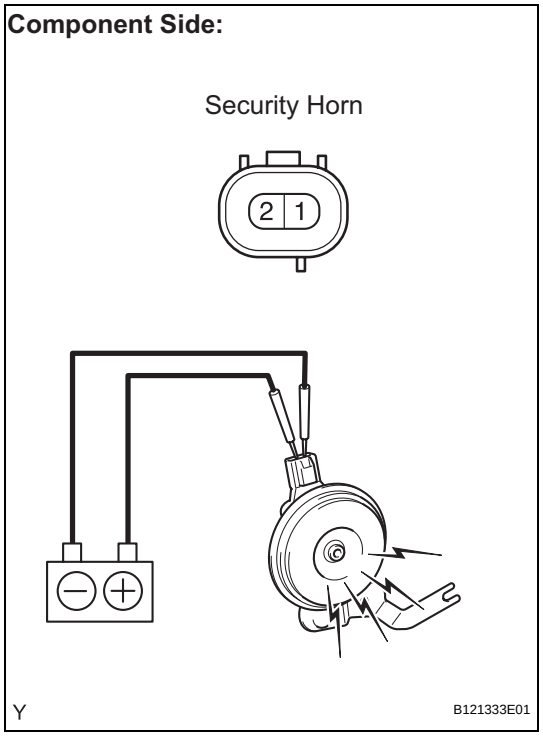

INSTALLATION

1. INSTALL SECURITY HORN ASSEMBLY

(a) Install the security horn with the nut.

Torque: 8.0 N*m (82 kgf*cm, 71 in.*lbf)

(b) Connect the connector.

2. CONNECT CABLE TO NEGATIVE BATTERY TERMINAL
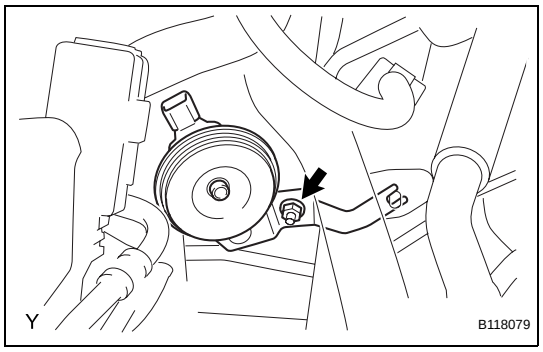
Torque: 5.4 N*m (55 kgf*cm, 48 in.*lbf)