Chevrolet Tahoe 2011 fuse box diagram

Instrument panel fuse block

The instrument panel fuse block access door is located on the driver's side edge of the instrument panel.

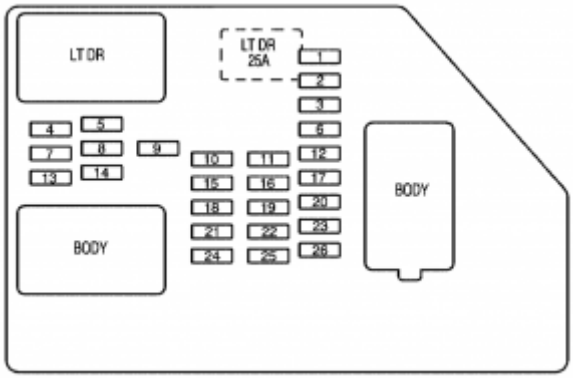

Chevrolet Tahoe – fuse box – instrument panel

Fuses	Usage
1	Rear Seats
2	Rear Accessory Power Outlet
3	Steering Wheel Controls Backlight
4	Driver Door Module
5	Dome Lamps, Driver's Side Turn Signal
6	Driver's Side Turn Signal, Stoplamp
7	Instrument Panel Back Lighting
8	Passenger's Side Turn Signal, Stoplamp
9	Passenger Door Module, Driver Unlock
10	Power Door Lock 2 (Unlock Feature)
11	Power Door Lock 2 (Lock Feature)
12	Stoplamps, Center-High Mounted Stoplamp
13	Rear Climate Controls
14	Power Mirror
15	Body Control Module (BCM)
16	Accessory Power Outlets
17	Interior Lamps
18	Power Door Lock 1 (Unlock Feature)
19	Rear Seat Entertainment
20	Ultrasonic Rear Parking Assist, Power Liftgate
21	Power Door Lock 1 (Lock Feature)
22	Driver Information Center (DIC)
23	Rear Wiper
24	Cooled Seats

25	Driver Seat Module, Remote Keyless Entry System
26	Driver Power Done Lock (Unlock Feature)

Circuit Breaker	Usage
LT DR	Driver Side Power Window Circuit Braker
Harness Connector	Usage
LT DR	Driver's Door Harness Connection
BODY	Harness Connector
BODY	Harness Connector

Center Instrument Panel Utility Block

The center instrument panel fuse block is located underneath the instrument panel, to the left of the steering column.

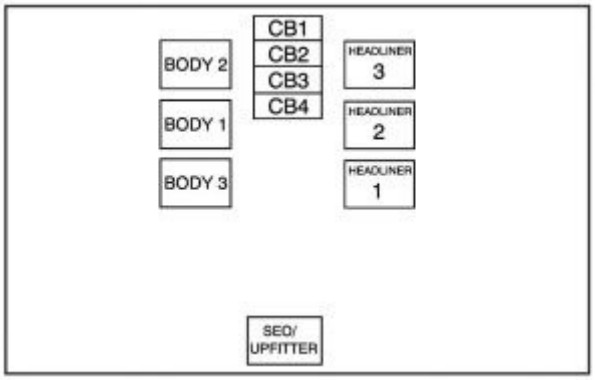

Chevrolet Tahoe – fuse box – center instrument panel fuse block

Harness Connector	Usage
BODY 2	Body Harness Connector 2
BODY 1	Body Harness Connector 1
BODY 3	Body Harness Connector 3
HEADLINER 3	Headliner Harness Connector 3
HEADLINER 2	Headliner Harness Connector 2
HEADLINER 1	Headliner Harness Connector 1
BRAKE CLUTCH	Brake Clutch Harness Connector
SEO/UPFITTER	Special Equipment Option Upfitter Harness Connector
Circuit Breaker	Usage
CB1	Passenger's Side Power Window Circuit Breaker
CB2	Passenger's Seat Circuit Breaker
CB3	Driver's Seat Circuit Breaker
CB4	Rear Sliding Window

Underhood Fuse Block

The underhood fuse block is located in the engine compartment, on the driver's side of the vehicle.

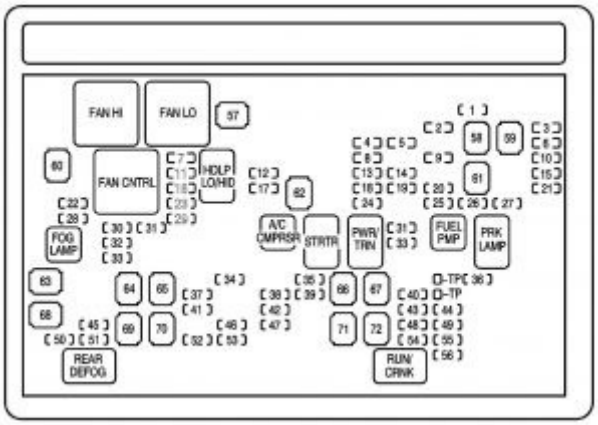

Chevrolet Tahoe – fuse box – engine compartment

Fuses	Usage
1	Right Trailer Stop/Turn Lamp
2	Electronic Stability Suspension Control, Automatic Level Control Exhaust
3	Left Trailer Stop/Turn Lamp
4	Engine Controls
5	Engine Control Module, Throttle Control
6	Trailer Brake Controller
7	Front Washer
8	Oxygen Sensors
9	Anti-lock Brakes System 2
10	Trailer Back-up Lamps
11	Driver’s Side Low-Beam Headlamp
12	Engine Control Module (Battery)
13	Fuel Injectors, Ignition Coils (Right Side)
14	Transmission Control Module (Battery)
15	Vehicle Back-up Lamps
16	Passenger’s Side Low-Beam Headlamp
17	Air Conditioning Compressor
18	Oxygen Sensors
19	Transmission Controls (Ignition)
20	Fuel Pump
21	Fuel System Control Module
22	Headlamp Washer
23	Rear Windshield Washer
24	Fuel Injectors, Ignition Coils (Left Side)
25	Trailer Park Lamps
26	Driver’s Side Park Lamps
27	Passenger’s Side Park Lamps
28	Fog Lamps
29	Horn
30	Passenger’s Side High-Beam Headlamp
31	Daytime Running Lamps (DRL)
32	Driver’s Side High-Beam Headlamp
33	Daytime Running Lamps 2

34	Sunroof
35	Key Ignition System, Theft Deterrent System
36	Windshield Wiper
37	SEO B2 Upfitter Usage (Battery)
38	Electric Adjustable Pedals
39	Climate Controls (Battery)
40	Airbag System (Ignition)
41	Amplifier
42	Audio System
43	Miscellaneous (Ignition), Cruise Control
44	Liftgate Release
45	Airbag System (Battery)
46	Instrument Panel Cluster
47	Not Used
48	Auxiliary Climate Control (Ignition)
49	Center High-Mounted Stoplamp (CHMSL)
50	Rear Defogger
51	Heated Mirrors
52	SEO B1 Upfitter Usage (Battery)
53	Cigarette Lighter, Auxiliary Power Outlet
54	Automatic Level Control Compressor Relay
55	Climate Controls (Ignition)
56	Engine Control Module, Secondary Fuel Pump (Ignition)

J-Case Fuse	Usage
57	Cooling Fan 1
58	Automatic Level Control Compressor
59	Heavy Duty Antilock Breaking System
60	Cooling Fan 2
61	Antilock Brake System 1
62	Starter
63	Stud 2 (Trailer Brakes)
64	Left Bussed Electrical Center 1
65	Electric Running Boards
66	Heated Windshield Washer System
67	Transfer Casse
68	Stud 1 (Trailer Connector Battery Power)
69	Mid-Bussed Electrical Center 1
70	Climate Control Blower
71	Power Liftgate Module
72	Left Bussed Electrical Center 2

Relays	Usage
FAN HI	Cooling Fan High Speed
FAN LO	Cooling Fan Low Speed
FAN CNTRL	Cooling Fan Control
HDLP LO/HID	Low-Beam Headlamp

FOG LAMP	Air Conditioning Compressor
STRTR	Starter
PWR/TRN	Powertrain
FUEL PMP	Fuel Pump
PRK LAMP	Parking Lamps
REAR DEFOG	Rear Defogger
RUN/CRANK	Switched Power

Hybrid Auxiliary Engine Compartment Fuse Block

The hybrid auxiliary engine compartment fuse block is located in the engine compartment near the front of the vehicle.

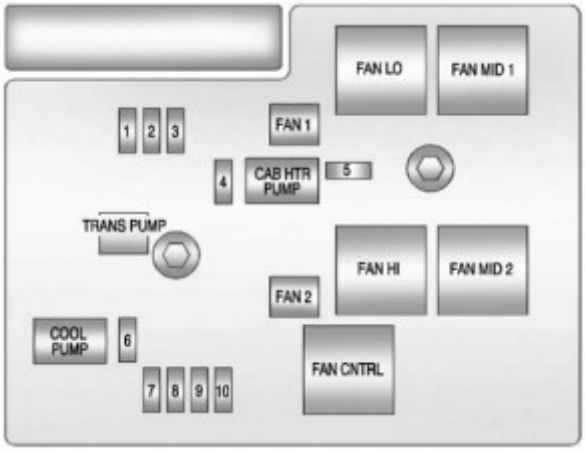

Chevrolet Tahoe – fuse box – engine compartment (hybrid auxiliary box)

Fuses	Usage
1	ACPO (SUV Only)
2	BECM FAN
3	ACCM
4	CAB HTR PMP
5	EMPTY
6	COOL PUMP
7	EPS
8	Drive Motor/Generator Control Module 1
9	Drive Motor/Generator Control Module 2
10	BECM

J-Case	Usage
FAN 1	Cooling Fan 1
TRANS PUMP	Auxiliary Transmission Fluid Pump
FAN 2	Cooling Fan 2
CAB HTR PMP	Cab Heater Pump

Relays	Usage

CAB HTR PUMP	Cabin Heater Pump
COOL PUMP	Coolant Pump
FAN LOW	Cooling Fan Low Speed Relay
FAN MID 1	Cooling Fan Mid 1
FAN HI	Cooling Fan High Speed Relay
FAN MID 2	Cooling Fan Mid 2
FAN CNTRL	Cooling Fan Contro