■ STEERING LOCK SYSTEM

According with the use of the smart entry & start system, the steering lock system uses a lock/unlock motor to lock and unlock the steering wheel.
This system mainly consists of the steering lock assembly, Power Source Control ECU, Certification ECU and ID Code Box.

- The steering lock assembly is integrated in the Steering Lock ECU, and the ECU controls the lock bar operation in the steering lock assembly through the control of lock/unlock motor.
- The Steering Lock ECU detects the position (lock/unlock) of the lock bar and transmits this information to the Power Source Control ECU and Certification ECU.
- In this system, the Certification ECU determines whether to lock or unlock the steering based on communication with the Power Source Control ECU. Then, the Certification ECU sends lock or unlock command signals to the Steering Lock ECU through the ID Code Box. Upon receiving the signals, the Steering Lock ECU operates the lock/unlock motor to lock or unlock the steering. For details, see page BE-157.

▶ System Diagram ◀

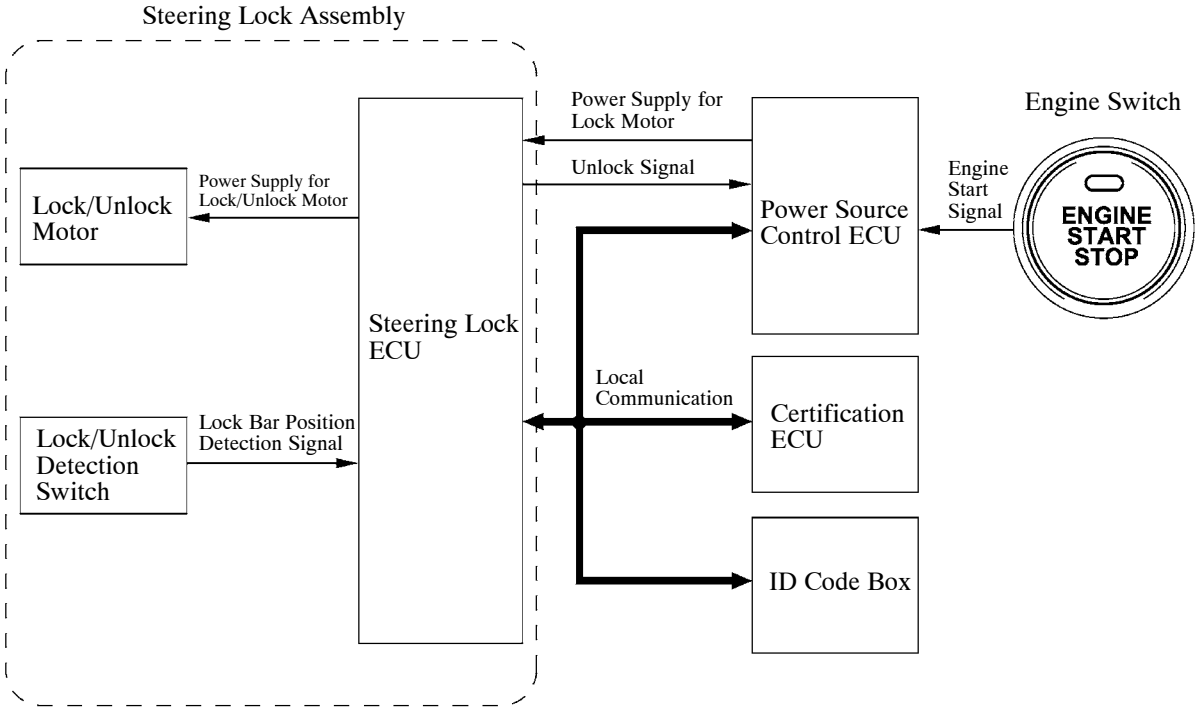

285CH45

Service Tip

It is not possible to replace only the Steering Lock ECU in the steering lock assembly. Therefore, if the ECU malfunctions, the entire steering lock assembly must be replaced.