Toyota A-540E, A-540H & A-541E Overhaul

APPLICATION

NOTE: **1999 Lexus ES300 is equipped with a U140E automatic transaxle. For diagnosis of this transaxle, see LEXUS U140E & U140F OVERHAUL article or LEXUS U140E & U140F ELECTRONIC CONTROLS article.**

TRANSMISSION APPLICATIONS

Vehicle Application	Transmission Model
Lexus	
ES300	A-541E
Toyota	
Avalon	A-541E
Camry (V6) LE, SE & XLE	A-541E
Camry Solara (V6) SE & SLE	A-541E
RAV4 4WD	A-540H
Sienna	A-540E

NOTE: **RAV4 is equipped with a transfer case. For transfer case overhaul procedures, see appropriate TRANSFER CASES article in AXLE SHAFTS & TRANSFER CASES.**

CAUTION: **All models are equipped with a Supplemental Restraint System (SRS). When servicing vehicle, use care to avoid accidental air bag deployment. All SRS electrical connections and wiring harness are covered by Yellow insulation. SRS-related components are located in steering column, center console, instrument panel and lower panel on instrument panel. DO NOT use electrical test equipment on these circuits. If necessary, deactivate SRS before servicing components. See AIR BAG DEACTIVATION PROCEDURES article in GENERAL INFORMATION.**

IDENTIFICATION

Vehicle Identification Number (VIN) is used for correct application of component parts and assemblies. VIN is stamped on vehicle identification number plate, located at top left corner of dash and on certification label, located on driver's door jam.

GEAR RATIOS

GEAR RATIOS

Gear	Ratio
1st	2.810
2nd	1.549
3rd	1.000
OD	.734
Reverse	2.296

DESCRIPTION

The A-540H 4WD transaxle has a center differential and electronic transfer case attached. Transaxle internal components are the same or similar to the A-540E and A-541E transaxles. Transaxle has 4 shift solenoids in the valve body to control engagement speed and throttle pressure for shift feel. Torque is distributed to front and rear wheels at all times to maximize traction of 4WD vehicle.

The A-540E and A-541E transaxles feature a torque converter with lock-up clutch, 4-speed planetary gear unit, differential, hydraulic control system, shift solenoids and electronic control system. The A-541E transaxle has an additional shift solenoid in the valve body to control engagement speed and throttle pressure for shift feel. A shift lock mechanism is used to minimize possibility of incorrect operation of transaxle.

LUBRICATION

On all models except RAV4 4WD, transaxle uses D-II or DEXRON-III transmission fluid. On RAV4 4WD, transaxle uses type "T" or type "T"-IV transmission fluid. For transaxle refill capacities, see **TRANSAXLE CAPACITIES** table.

TRANSAXLE CAPACITIES

TRANSAXLE CAPACITIES

Application	Qts. (L)
Lexus ES300	
Drain & Refill	
1997	3.7 (3.5)
1998	4.1 (3.9)
Dry Refill	7.1 (6.8)
Toyota	
Avalon & Camry	
Drain & Refill	
1997	3.7 (3.5)
1998-99	4.1 (3.9)
Dry Refill	7.1 (6.8)
Camry Solara	
Drain & Refill	5.0 (4.8)
Dry Refill	7.1 (6.8)

RAV4	
Drain & Refill	3.5 (3.3)
Dry Refill	7.4 (7.0)
Sienna	
Drain & Refill	3.7 (3.5)
Dry Refill	6.9 (6.5)

ON-VEHICLE SERVICE

PARK/NEUTRAL POSITION (PNP) SWITCH

Removal & Installation

1. Disconnect park/neutral position (PNP) switch connector. Remove nut and disconnect shift control cable. Remove nut, washer and manual shaft lever. Pry back locking tab on manual shaft washer and remove nut. Remove 2 bolts and remove park/neutral position (PNP) switch.
2. Install PNP switch to manual shaft. Install 2 bolts finger tight. Install NEW locking plate. Install nut and tighten to 61 INCH lbs. (6.9 N.m). Stake nut with locking plate. Install manual shaft lever, washer and nut. Tighten nut to 115 INCH lbs. (13 N.m). Install shift control cable and nut. Tighten nut to 11 ft. lbs. (15 N.m). Adjust switch by aligning groove and neutral basic line. Tighten 2 bolts to 48 INCH lbs. (5.4 N.m). Ensure engine starts in Park and Neutral.

THROTTLE CABLE

See appropriate AUTOMATIC TRANSMISSION SERVICING article in TRANSMISSION SERVICING.

VALVE BODY ASSEMBLY

CAUTION: Note bolt length and location during disassembly. Proper length bolts must be installed to prevent case damage.

Removal

1. Clean exterior of transaxle. Remove oil pan plug. Drain transaxle. Remove oil pan and gasket. Discard gasket. Remove oil strainer. Note location of magnets in oil pan. Remove magnets. Examine particles in pan. Steel (magnetic) particles indicate bearing, gear, or plate wear. Brass (non-magnetic) particles indicate bushing wear.
2. Remove tube bracket. Note location of oil tubes, and remove oil tubes. Disconnect solenoid wiring harness connector(s). Remove manual detent spring. Remove manual valve. Disconnect throttle cable from cam. Remove valve body assembly. Remove 2nd brake apply gasket.

Installation

1. Install NEW 2nd brake apply gasket. While holding cam down, slip cable end into slot. DO NOT tangle

solenoid wire. Install valve body assembly. Hand tighten valve body assembly retaining bolts. See **Fig. 1** and **Fig. 2** . Tighten all retaining bolts to specification. See **TORQUE SPECIFICATIONS** . Connect solenoid wiring connector(s).

2. Align manual valve with pin on manual shaft lever. Lower manual valve body into position. Install 5 bolts finger tight. See **Fig. 3** . Install detent spring. Ensure manual valve lever is in contact with center of roller at tip of detent spring. Install 2 bolts finger tight. Tap oil tubes into position. DO NOT bend or damage tubes during installation. Install oil tube bracket.
3. Install oil strainer. Install magnets in oil pan. Ensure magnets do not interfere with oil tubes. Install oil pan and new gasket. Install drain plug with NEW washer gasket. Fill transaxle with ATF.

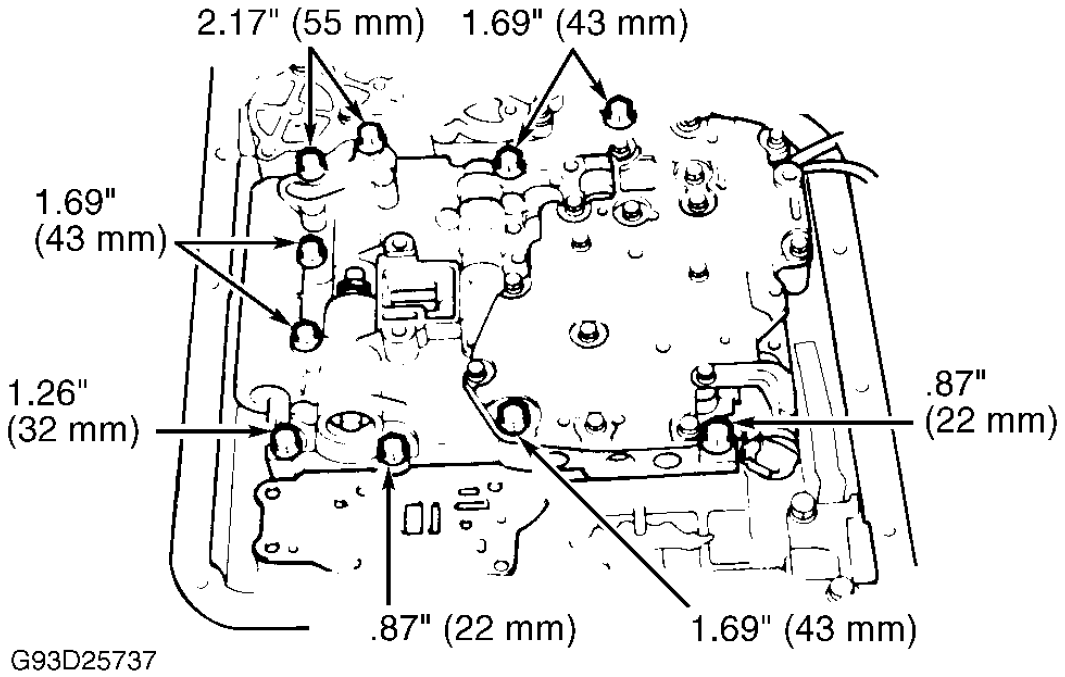

Fig. 1: Locating Valve Body Assembly Bolts (A-540E & A-540H)
Courtesy of TOYOTA MOTOR SALES, U.S.A., INC.

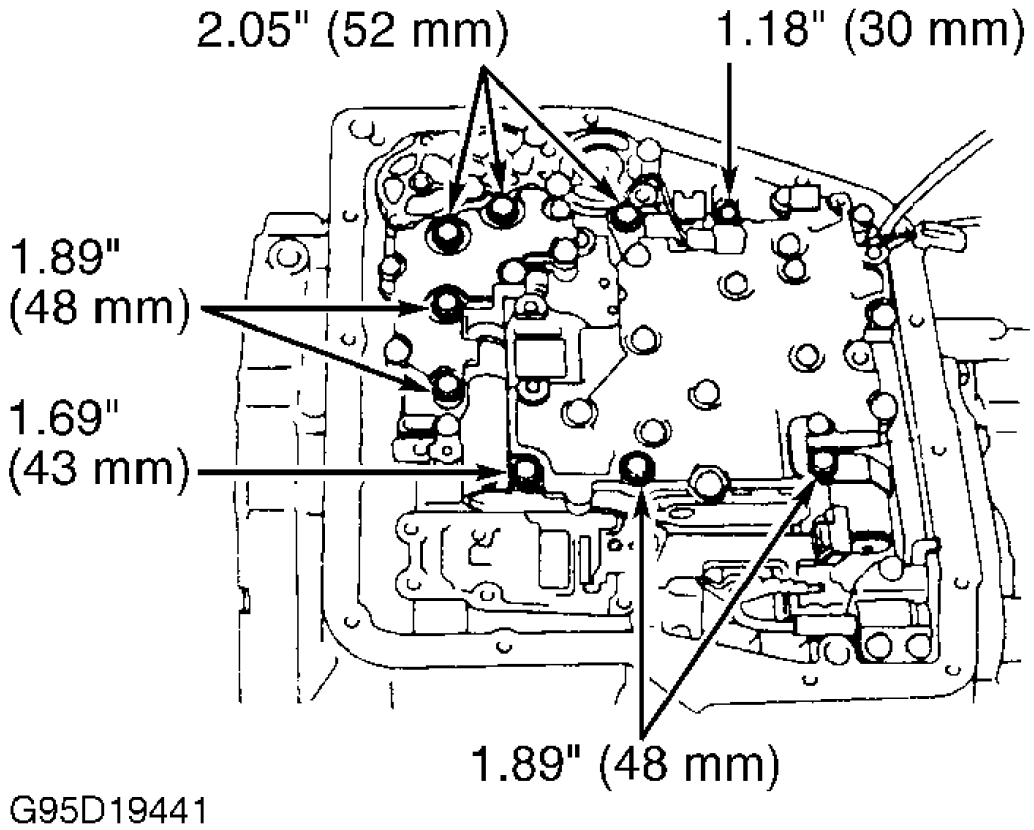

Fig. 2: Locating Valve Body Assembly Bolts (A-541E)
Courtesy of TOYOTA MOTOR SALES, U.S.A., INC.

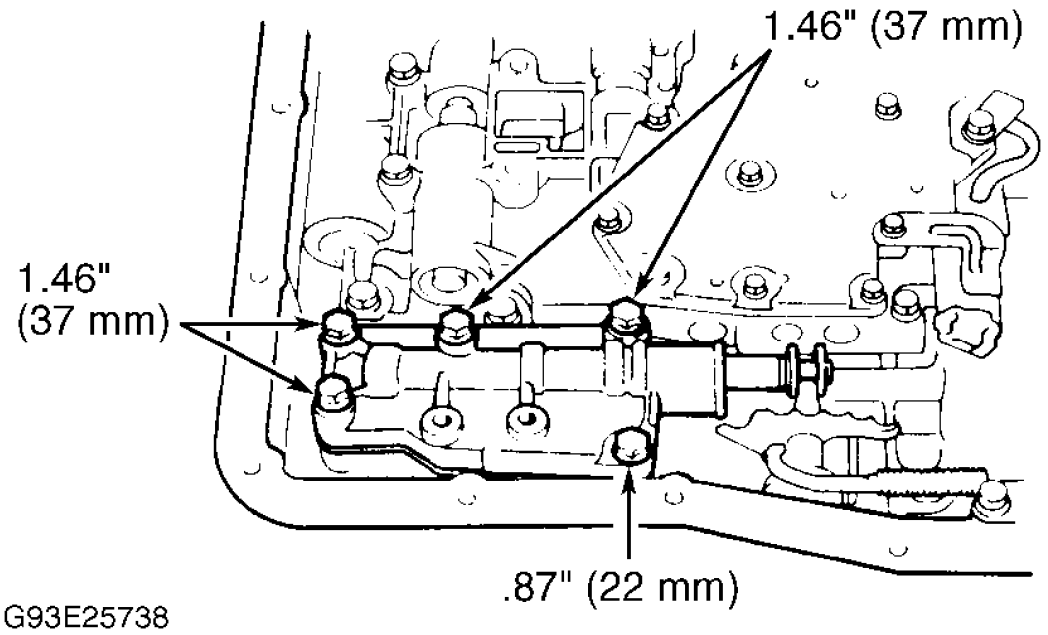

Fig. 3: Locating Manual Valve Body Bolts
Courtesy of TOYOTA MOTOR SALES, U.S.A., INC.

TROUBLE SHOOTING

NOTE: **For electronic diagnosis and component testing of A-540E, A-540H and A-541E transaxles, see appropriate TOYOTA ELECTRONIC CONTROLS article. For diagnosis and testing of shift lock system, See TOYOTA & LEXUS SHIFT LOCK SYSTEM article. For transaxle component locations, see Fig. 4 .**

SYMPTOM DIAGNOSIS

Fluid Discolored Or Smells Burnt

Fluid contaminated. Torque converter faulty. Transaxle faulty.

Vehicle Does Not Move In Any Forward Gear Or Reverse

Check manual valve, parking lock pawl, primary regulator valve, overdrive (OD) one-way clutch, OD direct clutch, OD brake, front planetary gear, rear planetary gear and OD planetary gear.

Vehicle Does Not Move In Any Forward Gear

Check forward clutch, No. 2 one-way clutch, 1st and reverse brake, 2nd coast brake, 2nd brake and direct

clutch.

Vehicle Does Not Move In Reverse ("R")

Check 1-2 shift valve, 2-3 shift valve, 2nd coast brake, front planetary gear, rear planetary gear, direct clutch, OD direct clutch and 1st and reverse brake.

No 1-2 &/Or 2-3 Upshift

Check Throttle Position (TP) sensor circuit, No. 1 and No. 2 shift solenoid circuit, Vehicle Speed Sensor (VSS) circuit, Electronic Control Transmission Electronic Control Module (ECT ECM), 1-2 shift valve, 2-3 shift valve, 2nd brake, direct clutch and No. 1 one-way clutch.

No 3-O/D Upshift

Check OD switch and OD OFF indicator switch circuit, OD cancel signal circuit, No. 1 and No. 2 shift solenoid circuit, VSS, Engine Coolant Temperature (ECT) circuit, ECT ECM, 3-4 shift valve and OD brake.

No O/D-3 Downshift

Check No. 1 and No. 2 shift solenoid valve, VSS circuit, OD cancel signal circuit, ECT ECM and 3-4 shift valve.

No 3-2 &/Or 2-1 Downshift

Check No. 1 and No. 2 shift solenoid valve, VSS circuit, TP sensor circuit, ECT ECM, 2-3 shift valve, 1-2 shift valve and 2nd coast brake.

No Torque Converter Lock-Up

Check shift solenoid valve SL circuit, TP sensor circuit, VSS circuit, OD cancel circuit, brakelight circuit, ECT circuit, ECT ECM, lock-up relay valve and torque converter clutch.

Torque Converter Lock-Up Will Not Release

Check shift solenoid valve SL circuit, TP sensor circuit, brakelight circuit, ECT ECM circuit, lock-up relay valve and torque converter clutch.

Shift Speeds Too High Or Too Low

Check TP sensor circuit, VSS circuit, shift solenoid valve SL circuit, OD cancel signal circuit, pattern select switch circuit and ECT ECM.

Harsh Engagement Neutral To Reverse

Check direct clutch accumulator, direct clutch, throttle valve and 1st and reverse brake.

Harsh Engagement Neutral To Drive

Check forward clutch accumulator, throttle valve and forward clutch.

No Engine Braking In Low

Check low coast modulator valve and 1st and reverse brake.

No Engine Braking In 2nd

Check 2nd coast modulator valve and 2nd coast brake.

CLUTCH & BRAKE APPLICATION

Selector Lever Position	Elements In Use
"D" (Drive)	
1st Gear	Forward Clutch, OD Direct Clutch, OD One-Way Clutch & No. 2 One-Way Clutch
2nd Gear	Forward Clutch, OD Direct Clutch, OD One-Way Clutch, No. 1 One-Way Clutch & 2nd Brake
3rd Gear	Forward Clutch, Direct Clutch, OD Direct Clutch, OD One-Way Clutch & 2nd Brake
Overdrive	Direct Clutch, Forward Clutch, OD Brake & 2nd Brake
"2" (Second)	
1st Gear	Forward Clutch, OD One-Way Clutch, OD Direct Clutch & No. 2 One-Way Clutch
2nd Gear	Forward Clutch, OD Direct Clutch, OD One-Way Clutch, 2nd Brake, 2nd Coast Brake & No. 1 One-Way Clutch
3rd Gear (1)	Forward Clutch, Direct Clutch, Direct Clutch, OD One-Way Clutch & 2nd Brake
"L" (Low)	
1st Gear	Forward Clutch, OD Direct Clutch, OD One-Way Clutch, & 1st & Reverse Brake & No. 2 One-Way Clutch
2nd Gear (2)	Forward Clutch, OD Direct Clutch, OD One-Way Clutch, No. 1 One-Way Clutch, 2nd Brake & 2nd Coast Brake
"R" (Reverse)	Direct Clutch, OD Direct Clutch & 1st & Reverse Brake
"N" (Neutral)	OD Direct Clutch
"P" (Park)	OD Direct Clutch

(1) Downshift only in 3rd gear for "2" position.

(2) Downshift only in 2nd gear for "L" position. Upshift does not occur.

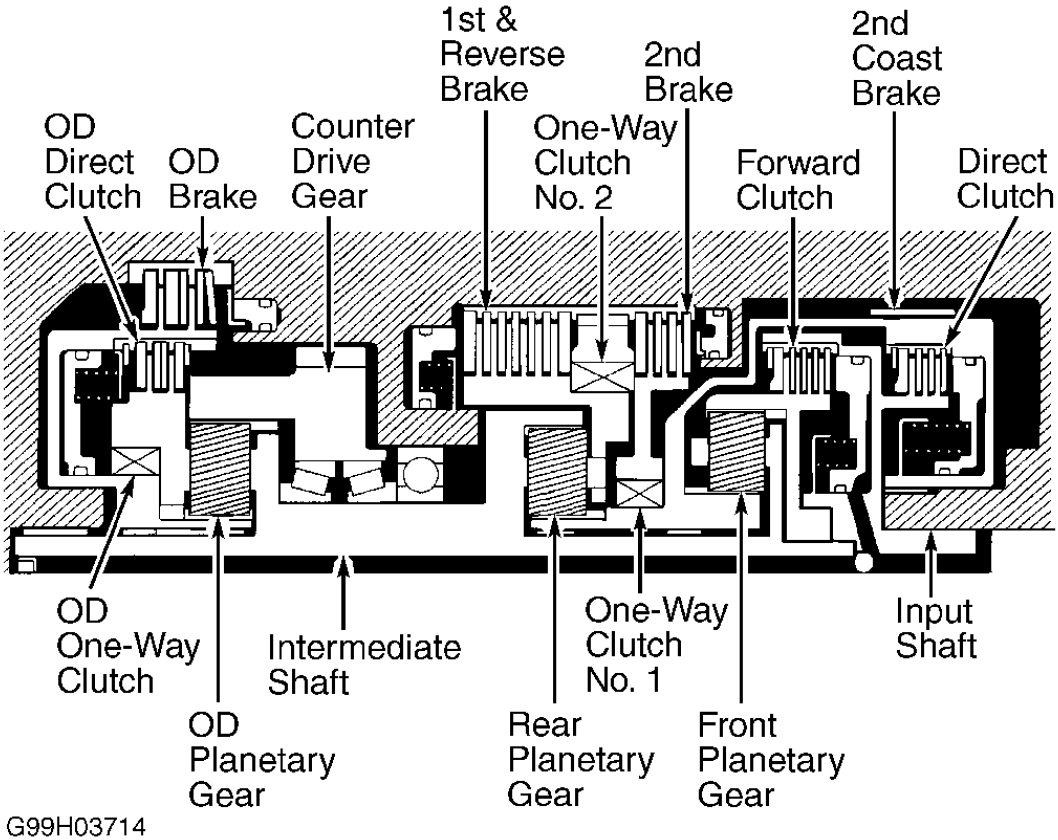

Fig. 4: Identifying Transaxle Component Locations
Courtesy of TOYOTA MOTOR SALES, U.S.A., INC.

TESTING

PRELIMINARY CHECK

Ensure a thorough explanation of when and how transaxle malfunction occurs is received from customer. Check fluid level and condition. Retrieve Diagnostic Trouble Codes (DTC's). See appropriate ELECTRONIC CONTROLS article. Proceed as necessary. If no codes are present, proceed with symptom diagnosis. See **TROUBLE SHOOTING** . Check throttle cable adjustment. See **ON-VEHICLE SERVICE** . Perform STALL SPEED, TIME LAG and HYDRAULIC PRESSURE TESTS as needed. After repairs are completed, perform ROAD TEST to confirm repairs.

TIME LAG TEST

CAUTION: Perform this test at normal operating fluid temperature of 122-176°F (50-80°C). Allow a one minute interval between tests. Record 3 measurements and average results.

1. If shift lever is actuated with engine idling, a time lag will be noted before shock can be felt. This test is used for checking condition of OD direct clutch, forward clutch, direct clutch, and 1st and reverse brake.
2. Apply parking brake. Start engine. On RAV4, ensure idle speed is 700-800 RPM. On all other models, ensure idle speed is 650-750 RPM. Shift transaxle from "N" into "D" range. Use a stop watch to measure elapsed time between shifting of lever until shock is felt. Standard time lag is less than 1.2 seconds.
3. Repeat procedure outlined in step 2) to measure time lag for "N" to "R". Standard lag time is less than 1.5 seconds.
4. If "N" to "D" time lag is longer than specification, line pressure is too low, forward clutch may be worn, or OD one-way clutch is not operating properly.
5. If "N" to "R" time lag is longer than specified, direct clutch may be worn, 1st and reverse brake may be worn, line pressure is too low or OD one-way clutch is not operating properly.

ROAD TEST

NOTE: Perform test at normal operating fluid temperature of 122-176°F (50-80°C).

"D" Range Test In NORM & PWR Pattern Ranges

1. Shift into "D" range. Hold accelerator pedal constant at full throttle. Place shift mode button in NORM or PWR position. Check 1-2, 2-3, and 3-OD lock-up and upshift points. See appropriate table under **SHIFT SPEED SPECIFICATIONS** .

   NOTE: There is no overdrive upshift when coolant temperature is below 140°F (60°C). There is no lock-up when vehicle speed is 6 MPH less than the set cruise control speed.

   - If no 1-2 upshift occurs, check 1-2 shift valve or solenoid.
   - If no 2-3 upshift occurs, check 2-3 shift valve or solenoid.
   - If no 3-OD upshift occurs, check 3-OD shift valve.
   - If all shift points are incorrect, check throttle valve, 1-2 shift valve, 2-3 shift valve and 3-OD shift valve.
   - If all lock-up points are incorrect, check lock-up relay valve or shift solenoid valve SL.
2. Use procedure outlined in step **1)** to check for shock and slip between 1-2, 2-3, and 3-OD upshifts. If shock is harsh, line pressure may be too high. Check accumulator or check ball.
3. Run vehicle in "D" range lock-up or overdrive gear. Check for abnormal noise and vibration.

   NOTE: Check for cause of abnormal noise and vibration must be made with extreme care as problem could be due to an unbalanced drive shaft, differential, tire, torque converter, etc.

4. While running in "D" range, confirm correct kickdown vehicle speed limits for 2-1, 3-2, OD-3 shift points. Check for abnormal shock and slip at kickdown.
5. Check lock-up function. Drive vehicle in OD gear of "D" range with lock-up on. Hold vehicle speed

steady at 43 MPH for 1997 Avalon, 47 MPH for RAV4 and 37 MPH for all other models. Lightly depress accelerator pedal. Ensure engine RPM does not change abruptly. Large increase in engine RPM indicates lock-up function is faulty.

"2" Range Test

1. Shift into "2" range and fully depress accelerator pedal to full throttle. Ensure 1-2 upshift takes place and shift point conforms to specifications. See appropriate table under **SHIFT SPEED SPECIFICATIONS** .
2. While driving in "2" range, 2nd gear, release accelerator pedal and check engine braking effect. If there is no engine braking effect, 2nd coast brake is faulty. Check for abnormal noise and shock at acceleration and deceleration.

"L" Range Test

While running in "L" range, ensure there is no upshift to 2nd gear. While running in "L" range, release accelerator pedal. If there is no engine braking effect, 1st and reverse brake is faulty. Check for abnormal noise at acceleration and deceleration.

"R" Range Test

Shift into "R" range. Accelerate vehicle from a stop at full throttle. Ensure slipping does not occur.

"P" Range Test

Stop vehicle on 5 degree or more gradient. Shift transaxle into "P" range. Release parking brake. Ensure parking pawl holds vehicle.

SHIFT SPEED SPECIFICATIONS

AVALON A-541E SHIFT SPEED SPECIFICATIONS

Application (1)	**MPH**
"D" Range (NORM or PWR)	
1st-2nd	41-44
2nd-3rd	76-81
3rd-OD	117-123
3rd-OD (2)	24-27
OD-3rd (2)	12-15
OD-3rd	113-118
3rd-2nd	70-75
2nd-1st	34-37
"2" Range (NORM or PWR)	
1st-2nd	41-44
3rd-2nd	83-88
2nd-1st	34-37

"L" Range (NORM or PWR)	
3rd-2nd	72-77
2nd-1st	37-39

(1) Wide open throttle.

(2) Fully closed throttle.

AVALON A-541E LOCK-UP SPEEDS

Application (1)	**MPH**
"D" Range (NORM or PWR) (2)	
1997	
Lock-Up ON In 3rd (3)	40-43
Lock-Up OFF In 3rd (3)	36-39
Lock-Up ON In OD	40-43
Lock-Up OFF In OD	36-39
1998	
Lock-Up ON In 3rd (3)	37-40
Lock-Up OFF In 3rd (3)	33-36
Lock-Up ON In OD	37-40
Lock-Up OFF In OD	33-36

(1) Throttle valve opening 5 percent.

(2) There is no lock-up in "L" or "2" ranges.

(3) With OD switch off.

CAMRY & CAMRY SOLARA (V6) A-541E SHIFT SPEED SPECIFICATIONS

Application (1)	**MPH**
"D" Range	
1st-2nd	37-41
2nd-3rd	70-75
3rd-OD	108-113
3rd-OD (2)	22-24
OD-3rd (2)	12-15
OD-3rd	104-109
3rd-2nd	65-70
2nd-1st	31-34
"2" Range	
1st-2nd	37-41
3rd-2nd	76-81

2nd-1st	31-34
"L" Range	
3rd-2nd	66-71
2nd-1st	34-37

(1) Wide open throttle.

(2) Fully closed throttle.

CAMRY & CAMRY SOLARA (V6) A-541E LOCK-UP SPEEDS

Application (1)	**MPH**
"D" Range (2)	
Lock-Up ON In 3rd (3)	37-40
Lock-Up OFF In 3rd (3)	33-35
Lock-Up ON In OD	37-40
Lock-Up OFF In OD	33-35

(1) Throttle valve opening 5 percent.

(2) There is no lock-up in "L" or "2" ranges.

(3) With OD switch off.

LEXUS ES300 A-541E SHIFT SPEED SPECIFICATIONS

Application (1)	**MPH**
"D" Range	
1st-2nd	37-41
2nd-3rd	70-75
3rd-OD	108-113
3rd-OD (2)	22-24
OD-3rd (2)	12-15
OD-3rd	104-109
3rd-2nd	65-70
2nd-1st	31-34
"2" Range	
1st-2nd	37-41
3rd-2nd	76-81
2nd-1st	31-34
"L" Range	
3rd-2nd	66-71
2nd-1st	34-37

(1) Wide open throttle.

(2) Fully closed throttle.

LEXUS ES300 A-541E LOCK-UP SPEEDS

Application (1)	MPH
"D" Range (2)	
Lock-Up ON In 3rd (3)	37-40
Lock-Up OFF In 3rd (3)	33-35
Lock-Up ON In OD	37-40
Lock-Up OFF In OD	33-35

(1) Throttle valve opening 5 percent.

(2) There is no lock-up in "L" or "2" ranges.

(3) With OD switch off.

RAV4 A-540H SHIFT SPEED SPECIFICATIONS

Application (1)	MPH
"D" Range (NORM or PWR)	
1st-2nd	35-39
2nd-3rd	64-70
3rd-OD	101-108
3rd-OD (2)	19-22
OD-3rd (2)	10-12
OD-3rd	90-96
3rd-2nd	58-64
2nd-1st	27-30
"2" Range (NORM or PWR)	
1st-2nd	35-39
2nd-1st	27-30
"L" Range (NORM or PWR)	
3rd-2nd	62-68
2nd-1st	27-30

(1) Wide open throttle.

(2) Fully closed throttle.

RAV4 A-540H LOCK-UP SPEEDS

Application (1)	MPH
"D" Range (2)	
NORM	

Lock-Up ON In 3rd (3)	39-43
Lock-Up OFF In 3rd (3)	35-38
Lock-Up ON In OD	37-40
Lock-Up OFF In OD	30-33
PWR	
Lock-Up ON In 3rd (3)	48-51
Lock-Up OFF In 3rd (3)	37-40
Lock-Up ON In OD	41-44
Lock-Up OFF In OD	34-37

(1) Throttle valve opening 5 percent.

(2) There is no lock-up in "L" or "2" ranges.

(3) With OD switch off.

SIENNA A-540E SHIFT SPEED SPECIFICATIONS

Application (1)	**MPH**
"D" Range	
1st-2nd	37-41
2nd-3rd	68-76
3rd-OD	106-115
3rd-OD (2)	23-27
OD-3rd (2)	13-16
OD-3rd	103-110
3rd-2nd	67-71
2nd-1st	31-34
"2" Range	
1st-2nd	37-41
3rd-2nd	75-82
2nd-1st	31-34
"L" Range	
3rd-2nd	65-71
2nd-1st	33-37

(1) Wide open throttle.

(2) Fully closed throttle.

SIENNA A-540E LOCK-UP SPEEDS

Application (1)	**MPH**
"D" Range (2)	

Lock-Up ON In 3rd (3)	36-40
Lock-Up OFF In 3rd (3)	32-36
Lock-Up ON In OD	36-40
Lock-Up OFF In OD	32-36

(1) Throttle valve opening 5 percent.

(2) There is no lock-up in "L" or "2" ranges.

(3) With OD switch off.

STALL SPEED TEST

CAUTION: Perform test at normal operating fluid temperature of 122-176°F (50-80°C). DO NOT maintain stall speed RPM for more than 5 seconds. Allow vehicle to idle in Neutral or Park for at least 5 minutes before performing next test.

1. Object of test is to check overall performance of transaxle and engine by measuring maximum stall speeds in "D" and "R" ranges.
2. Block front and rear wheels. Connect scan tool to DLC3, located under instrument panel. Apply parking and service brakes. Start engine. Position transmission in "D" range. Fully depress accelerator pedal. Immediately note highest engine RPM. DO NOT perform test longer than 5 seconds. Repeat test in "R" range. See **STALL SPEED SPECIFICATIONS** table.

STALL SPEED SPECIFICATIONS

Applications	RPM
A-540E	2300-2750
A-540H	2250-2550
A-541E	
1998-99 Avalon	2250-2550
Except 1998-99 Avalon	2450-2750

3. If stall speed is same for both ranges, but lower than specified RPM, engine output may be insufficient or stator one-way clutch is not operating properly.

NOTE: If stall speed RPM is more than 600 RPM below specified value, torque converter may be faulty.

4. If stall speed in "D" range is higher than specifications, forward clutch may be slipping, No. 2 one-way clutch and OD one-way clutch are not operating properly, or line pressure is too low.
5. If stall speed in "R" range is higher than specifications, direct clutch is slipping, 1st and reverse brake is slipping, OD direct clutch is slipping or line pressure is too low.
6. If stall speed in "R" and "D" ranges is higher than specifications, line pressure is too low, fluid level is incorrect or OD one-way clutch is not operating properly.

HYDRAULIC PRESSURE TEST

CAUTION: Hydraulic pressure test should be performed with transmission fluid temperature of 122-176°F (50-80°C).

Line Pressure Test

1. Ensure transmission fluid is at operating temperature. Raise and support vehicle. Remove transaxle case test plug and install pressure gauge. See **Fig. 5** . Lower vehicle and block all wheels.
2. Fully apply parking brake. Start engine. Apply brakes. Shift into "D" range. On A-540H transaxle, apply battery voltage between ground and terminal No. 1 of shift solenoid valve ST connector. See **Fig. 6** . On all transaxles, measure line pressure at idle. Accelerate to full throttle. Measure line pressure at stall speed. See appropriate LINE PRESSURE SPECIFICATIONS table.
3. On all models, repeat test in "R" range. DO NOT ground shift solenoid valve ST in "R" range.
4. If pressures exceed specifications in all ranges, regulator valve or throttle valve is faulty or throttle cable is out of adjustment.
5. If pressures in all ranges are lower than specifications, oil pump, regulator valve, throttle valve or OD direct clutch is faulty or throttle cable is out of adjustment.
6. If pressure is lower than specifications in "D" range only, forward clutch is faulty or "D" range circuit has a fluid leak.
7. If pressure is lower than specifications in "R" range only, direct clutch is faulty, 1st and reverse brake is faulty or "R" range circuit has a fluid leak.

LINE PRESSURE SPECIFICATIONS (A-540E)

Selector Position	Pressure - psi (kg/cm^2)
"D" Position	
Idle Speed	51-60 (3.6-4.2)
Stall Speed	127-148 (8.9-10.4)
"R" Position	
Idle Speed	93-108 (6.5-7.6)
Stall Speed	230-268 (16.1-18.8)

LINE PRESSURE SPECIFICATIONS (A-540H) 1997(1)

Selector Position	Pressure - psi (kg/cm^2)
"D" Position	
Idle Speed	
With Solenoid Valve ST On	76-102 (5.4-7.2)
With Solenoid Valve ST Off	53-61 (3.7-4.3)
Stall Speed	
With Solenoid Valve ST On	192-225 (13.5-15.8)
With Solenoid Valve ST Off	106-125 (7.5-8.8)

"R" Position	
Idle Speed	76-102 (5.4-7.2)
Stall Speed	192-225 (13.5-15.8)
(1) See **Fig. 6** for shift solenoid valve ST activation location.	

LINE PRESSURE SPECIFICATIONS (A-540H) 1998-99(1)

Selector Position	**Pressure - psi (kg/cm^2)**
"D" Position	
Idle Speed	
With Solenoid Valve ST On	76-102 (5.4-7.2)
With Solenoid Valve ST Off	53-61 (3.7-4.3)
Stall Speed	
With Solenoid Valve ST On	165-179 (11.6-12.6)
With Solenoid Valve ST Off	249-269 (17.5-18.9)
"R" Position	
Idle Speed	76-102 (5.4-7.2)
Stall Speed	192-225 (13.5-15.8)
(1) See **Fig. 6** for shift solenoid valve ST activation location.	

LINE PRESSURE SPECIFICATIONS (A-541E)

Selector Position	**Pressure - psi (kg/cm^2)**
"D" Position	
Idle Speed	58-66 (4.1-4.7)
Stall Speed	165-179 (11.6-12.6)
"R" Position	
Idle Speed	117-128 (8.2-9.0)
Stall Speed	249-269 (17.5-18.9)

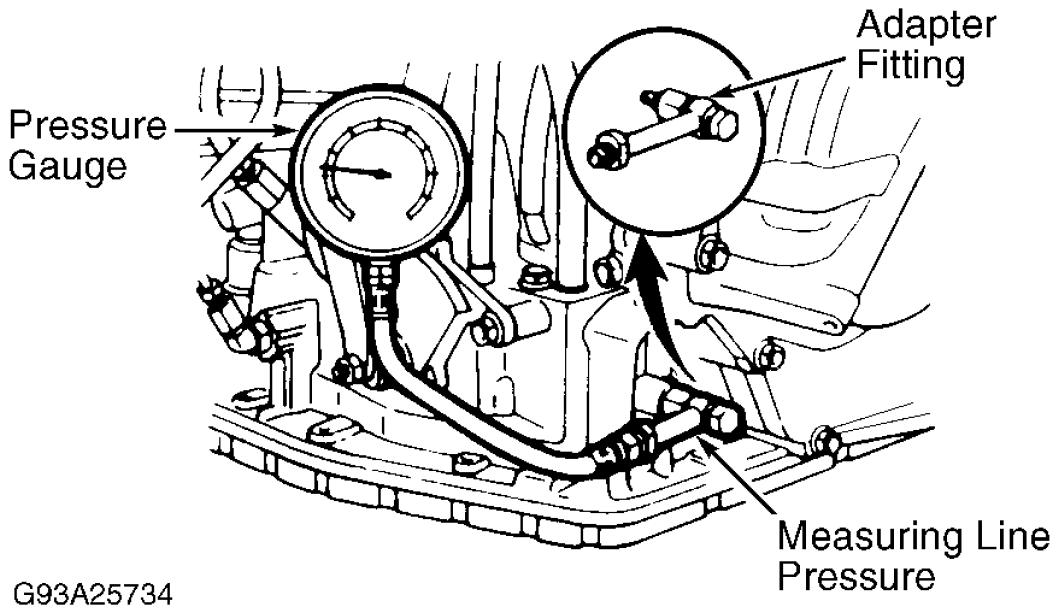

Fig. 5: Checking Hydraulic Pressure
Courtesy of TOYOTA MOTOR SALES, U.S.A., INC.

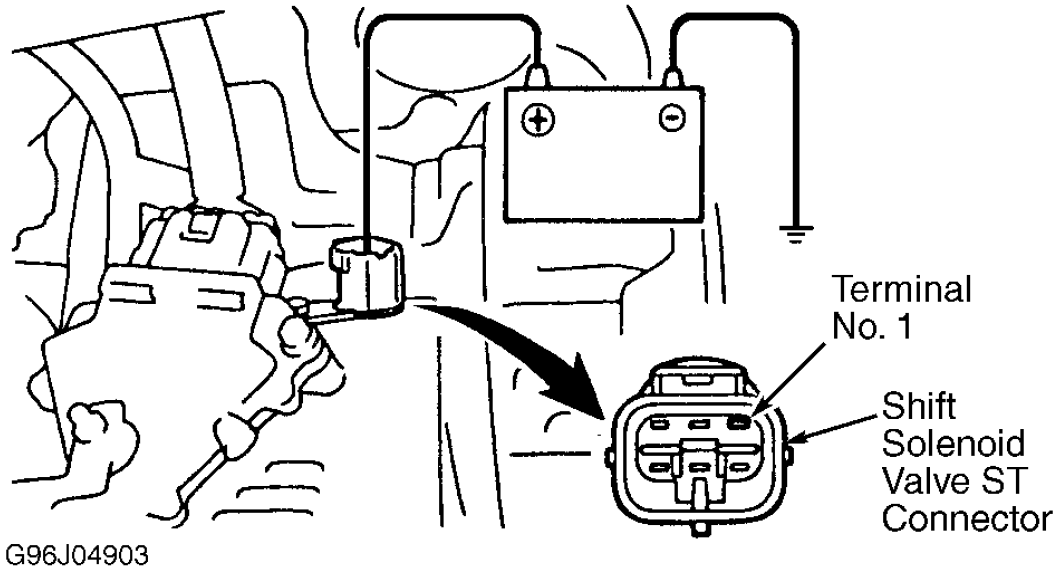

Fig. 6: Activating Shift Solenoid Valve ST
Courtesy of TOYOTA MOTOR SALES, U.S.A., INC.

TORQUE CONVERTER

NOTE: **Torque converter is a sealed unit and must be serviced as complete assembly. Perform following tests to check converter condition. Torque converter and oil cooler lines must be thoroughly cleaned and flushed if transaxle fluid is contaminated.**

ONE-WAY CLUTCH TEST

1. Insert a turning tool into inner race of one-way clutch. Install Tester (09350-32014) so that it fits in notch of converter hub and other race of one-way clutch.
2. With torque converter in normal operating position, clutch should lock when turned counterclockwise and should rotate freely and smoothly when turned clockwise. See **Fig. 7** . If one-way clutch fails test in either direction, clean converter. Retest clutch. If clutch fails test, replace converter.

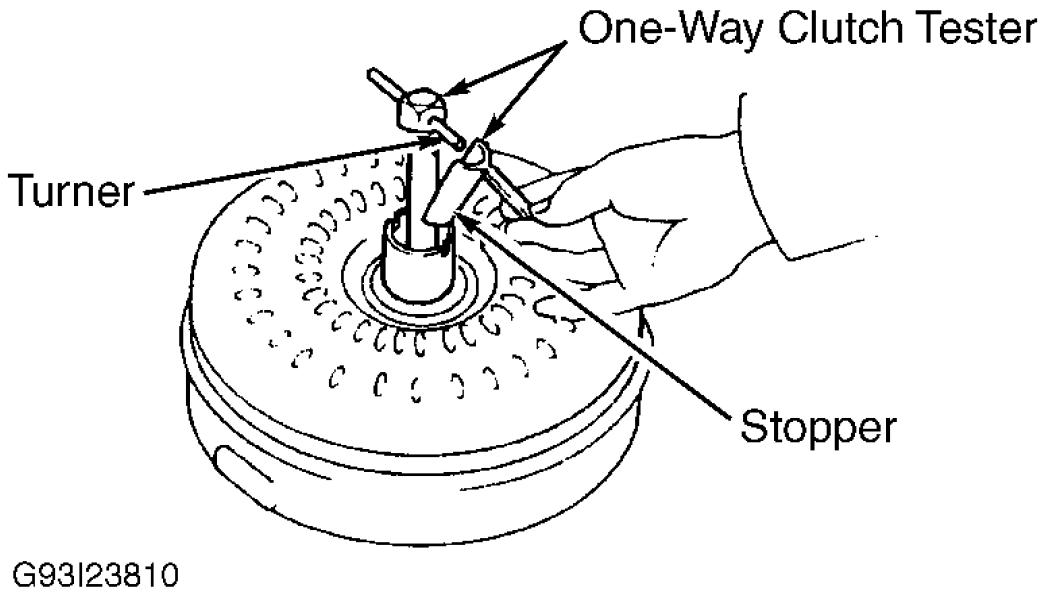

Fig. 7: Testing Torque Converter One-Way Clutch
Courtesy of TOYOTA MOTOR SALES, U.S.A., INC.

CONVERTER SLEEVE RUNOUT TEST

1. Temporarily mount torque converter to drive plate. Mount a dial indicator with needle resting on converter sleeve. See **Fig. 8** . Rotate converter. If runout exceeds .012" (.30 mm), ensure converter is properly mounted to drive plate.
2. If converter is properly mounted and runout exceeds specifications, replace torque converter. Mark

position of converter to ensure correct installation. Remove converter from drive plate.

DRIVE PLATE (FLYWHEEL) RUNOUT TEST

Measure drive plate runout. See **Fig. 9** . If runout exceeds .008" (.20 mm), or if ring gear is damaged, replace drive plate. If installing a NEW drive plate, note position of spacers. Tighten bolts to 61 ft. lbs. (83 N.m).

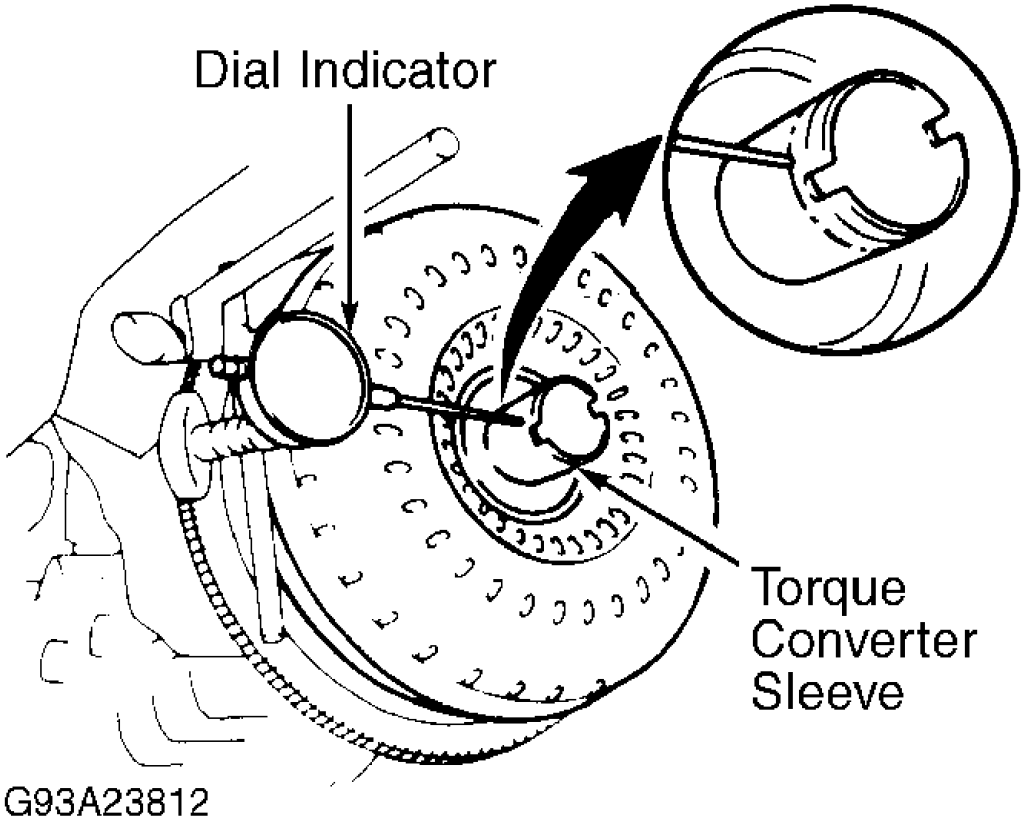

Fig. 8: Measuring Torque Converter Sleeve Runout
Courtesy of TOYOTA MOTOR SALES, U.S.A., INC.

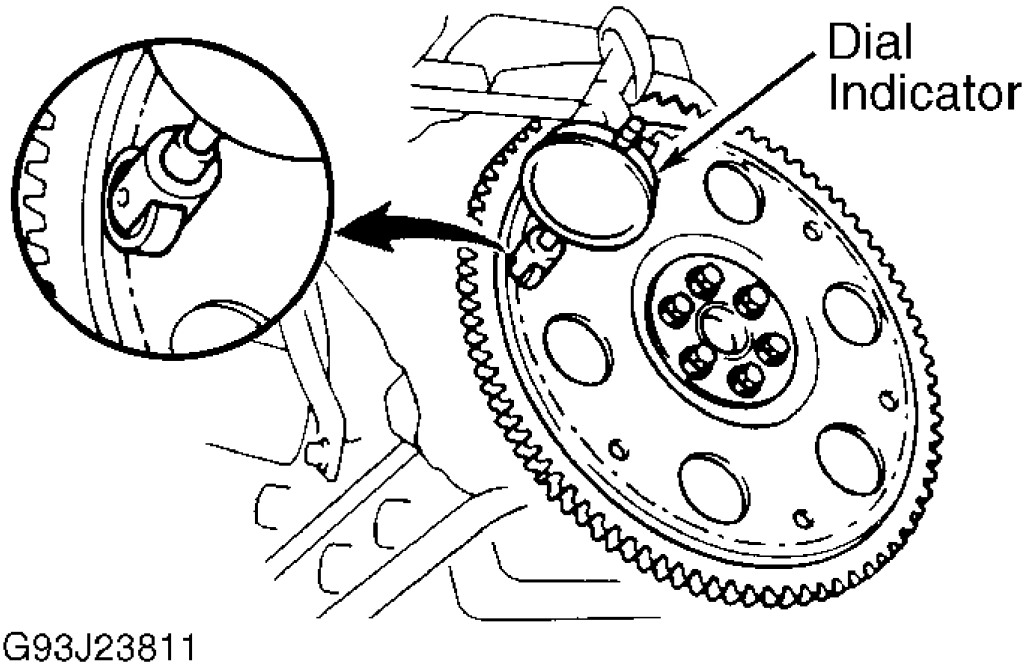

Fig. 9: Checking Drive Plate Runout
Courtesy of TOYOTA MOTOR SALES, U.S.A., INC.

REMOVAL & INSTALLATION

For transaxle removal procedure, see appropriate AUTOMATIC TRANSMISSION REMOVAL article in TRANSMISSION SERVICING.

OVERHAUL

TRANSAXLE DISASSEMBLY

NOTE: RAV4 is equipped with a transfer case. For transfer case overhaul procedures, see TOYOTA A-540H transfer case article in AXLE SHAFTS & TRANSFER CASES.

1. On A-540H, remove breather hose from drive pinion bearing cage. Remove bolts and nuts on transfer case assembly. Remove transfer case assembly from transaxle. Remove apply gasket. Using Remover/Installer (09520-32012), remove differential side gear intermediate shaft. See **Fig. 63** .
2. On all transaxles, remove cooler pipe unions and/or elbows. Remove oil cooler pipes (if applicable). Remove dipstick and filler tube. Remove manual shift lever. Pry back locking tab on manual shaft

washer. Remove nut and washer. Remove Park/Neutral Position (PNP) switch.

3. Remove throttle cable retaining bolt. Remove solenoid harness connector retaining bolt (if applicable). Remove vehicle speed sensor mounted in differential cover. Remove sensor adapter. Remove direct clutch speed (T/M revolution) sensor mounted to upper case cover (if equipped). Remove upper case cover. Remove transaxle oil pan. Examine any contamination in pan to aid in diagnosis.
4. Remove oil stainer (filter) and oil pipe hold-down bracket. Remove manual valve body including detent spring. Gently remove all oil pipes by prying up on end of pipe with screwdriver.
5. Disconnect solenoid harness connectors. Remove connector clamp and apply pipe retainer. Remove 1st and reverse apply pipe. Remove valve body bolts. Remove wiring harness clamp. Disconnect throttle cable from cam and remove valve body.
6. Remove throttle cable and solenoid wiring harness. Remove 2nd brake apply gasket. Loosen accumulator cover bolts in crisscross pattern. Remove cover and gasket. Remove forward clutch accumulator. See **Fig. 10** .
7. Remove remaining accumulators by applying 14 psi (1kg/cm^2) of air pressure to apply hole. See **Fig. 11** . Cover accumulator bores with a rag when applying air.
8. Mark 2nd coast brake servo apply piston rod where it meets case. Apply 57-114 psi (4-8 kg/cm^2) of air pressure to apply hole and measure piston rod travel (stroke). See **Fig. 12** . Piston rod travel should be .079-.138" (2.0-3.5 mm). If rod travel is not within specification, further inspect band during disassembly.
9. Remove 2nd coast brake piston cover snap ring. Apply air to oil hole and remove cover and piston assembly. See **Fig. 12** . Remove oil pump bolts. Using appropriate puller, remove oil pump.
10. Remove direct clutch and forward clutch. Separate components and remove thrust washer. Remove thrust bearings from front and rear of forward clutch. Push out 2nd coast brake band anchor pin. Remove band and inspect.
11. Remove front planetary ring gear. Remove front planetary gear with thrust bearings on either side. Remove thrust bearings. Remove sun gear shell with thrust washer.
12. Apply compressed air to 2nd brake piston port and check operation of 2nd brake. See **Fig. 13** . Remove 2nd coast brake band guide. DO NOT separate band guide and bolt. Remove snap ring securing 2nd brake drum. Remove drum.
13. Remove 2nd brake piston return spring. Remove No. 1 one-way clutch. Remove 2nd brake clutch discs, plates and flange. Note number and location of components. Remove snap ring securing No. 2 one-way clutch and rear planetary gear. See **Fig. 14** . Remove components.
14. Remove thrust washer from rear planetary gear. Remove rear planetary ring gear with thrust bearing. Apply air into appropriate passage to check 1st and reverse brake operation. See **Fig. 15** .
15. Using feeler gauge, check pack clearance of 1st and reverse brake assembly. Clearance should be .033-.081" (.85-2.05 mm) for A-540E transaxle, .041-.085" (1.04-2.16 mm) for A-540H transaxle, or .076-.106" (1.92-2.68 mm) for A-541E transaxle. Remove snap ring securing 1st and reverse brake. Remove 1st and reverse brake discs, plates and flange. Note number and location of components.
16. From back of transaxle, remove 13 bolts securing overdrive unit. Using soft-faced hammer, tap around outside of case until overdrive unit loosens and can be removed.
17. Remove overdrive (OD) planetary gear from transaxle case. Remove OD brake drum. See **Fig. 14** . Remove gaskets for OD clutch apply and OD brake apply ports.
18. Using appropriate compressor, compress 1st and reverse piston. See **Fig. 16** . Remove snap ring. Apply

compressed air and remove piston. See **Fig. 15** . Remove inner snap ring.

NOTE: **If manual shift linkage is damaged or needs to be disassembled, see MANUAL SHIFT LINKAGE under COMPONENT DISASSEMBLY & REASSEMBLY.**

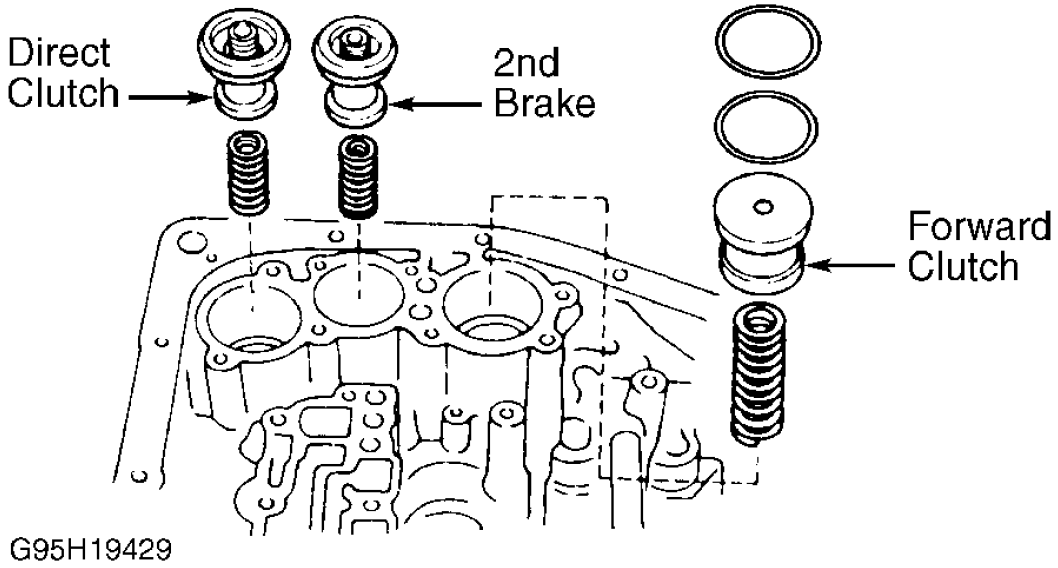

Fig. 10: Exploded View Of Accumulator Piston Assemblies
Courtesy of TOYOTA MOTOR SALES, U.S.A., INC.

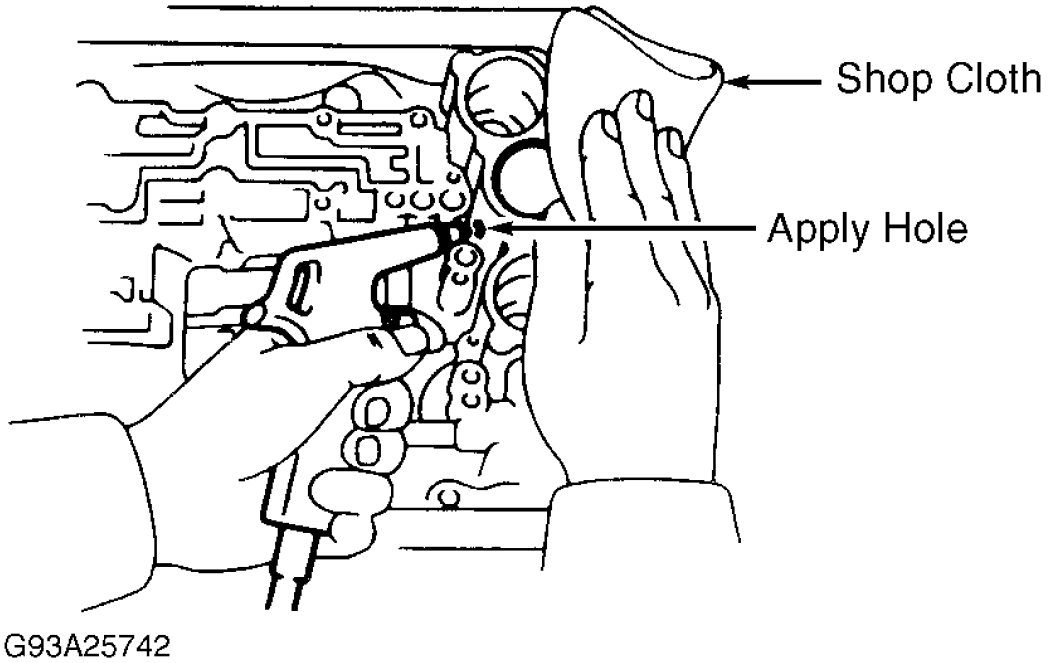

Fig. 11: Removing Accumulator Pistons & Springs
Courtesy of TOYOTA MOTOR SALES, U.S.A., INC.

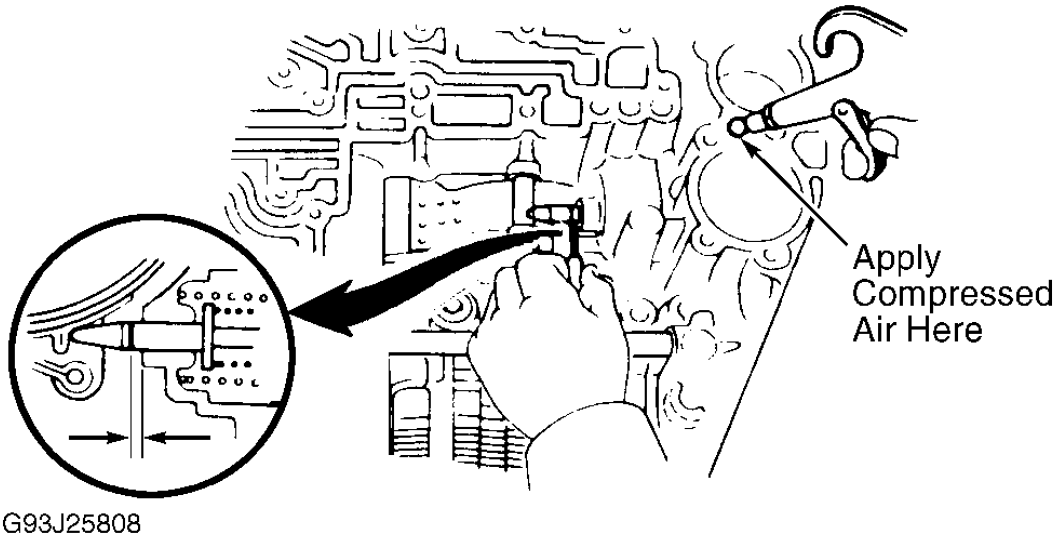

Fig. 12: Checking Operation & Removing 2nd Coast Brake

Courtesy of TOYOTA MOTOR SALES, U.S.A., INC.

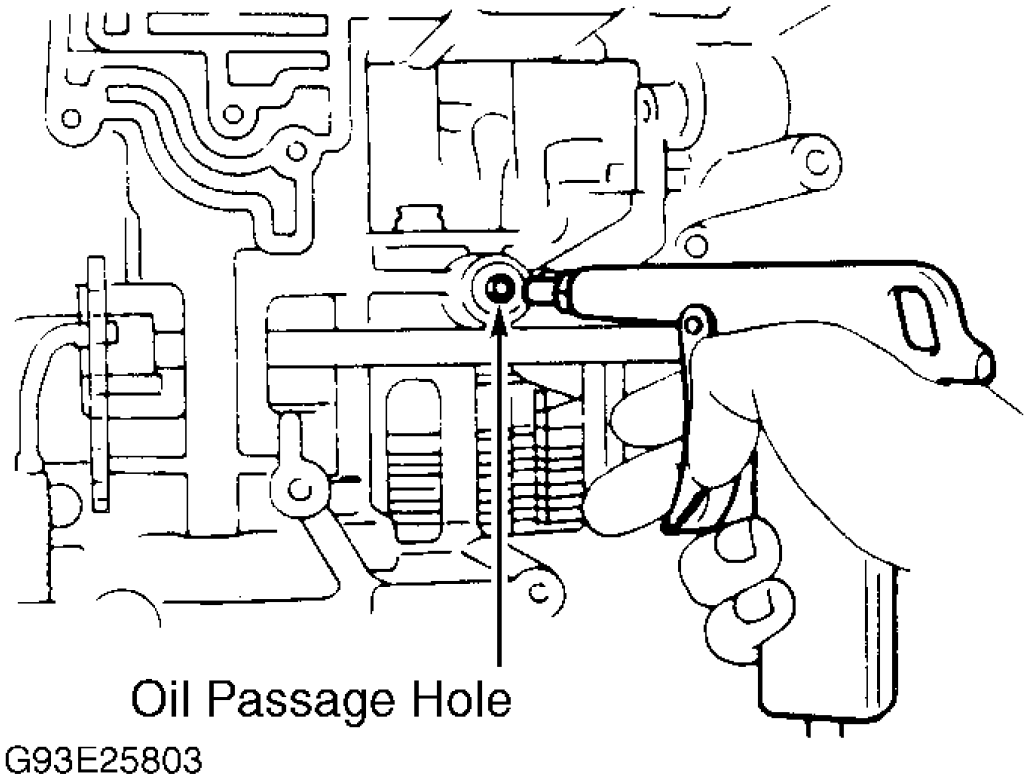

Fig. 13: Checking Operation & Removing 2nd Brake
Courtesy of TOYOTA MOTOR SALES, U.S.A., INC.

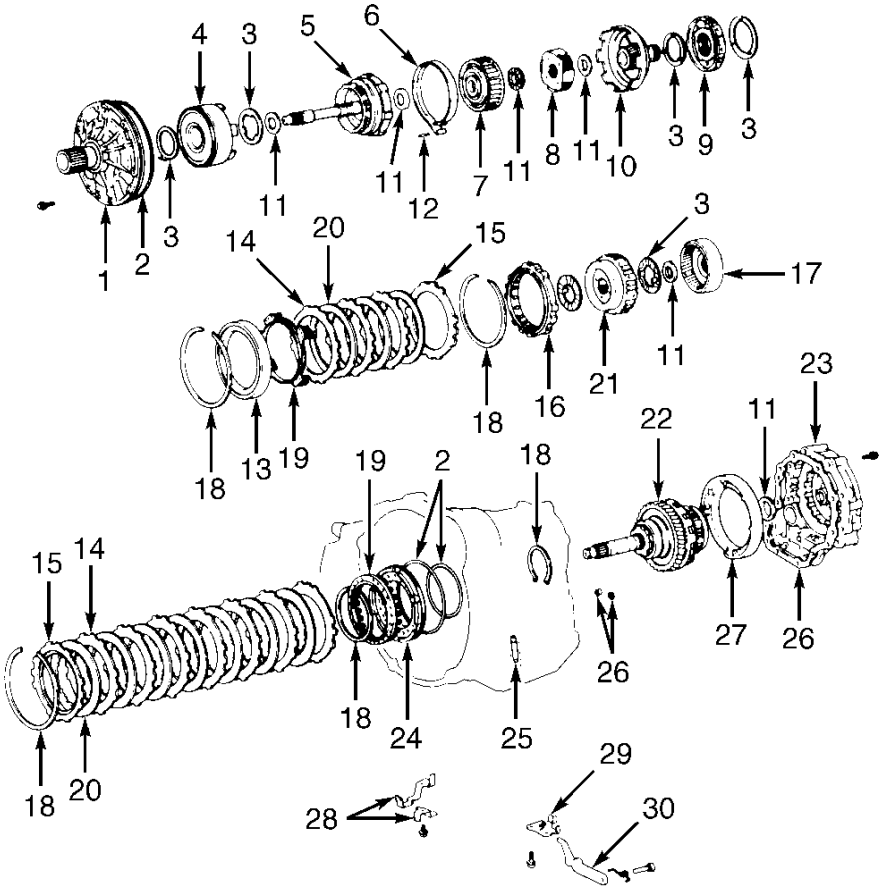

1. Oil Pump
2. "O" Ring
3. Thrust Washer
4. Direct Clutch
5. Forward Clutch
6. 2nd Coast Brake Band
7. Front Planetary Ring Gear
8. Front Planetary Gear
9. No. 1 One-Way Clutch
10. Drum & Sun Gear
11. Bearing
12. Pin
13. Second Brake Drum
14. Plate
15. Flange
16. No. 2 One-Way Clutch
17. Rear Planetary Ring Gear
18. Snap Ring
19. Spring
20. Disc
21. Rear Planetary Gear
22. Overdrive Planetary Gear
23. Overdrive Case
24. 1st & Reverse Brake Piston
25. 2nd Brake Drum Gasket
26. Gasket
27. Overdrive Brake Drum
28. 2nd Coast Brake Band Guide
29. Bracket
30. Parking Lock Pawl

G93B25743

Fig. 14: Exploded View Of Transaxle Internal Components
Courtesy of TOYOTA MOTOR SALES, U.S.A., INC.

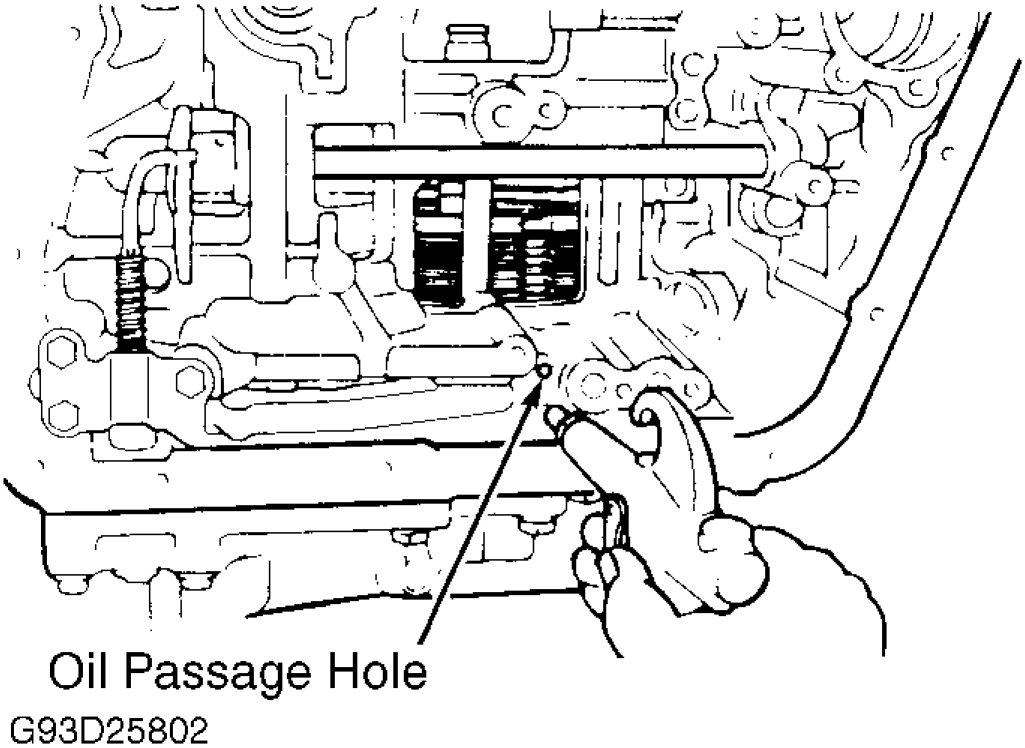

Fig. 15: Checking Operation & Removing 1st & Reverse Brake
Courtesy of TOYOTA MOTOR SALES, U.S.A., INC.

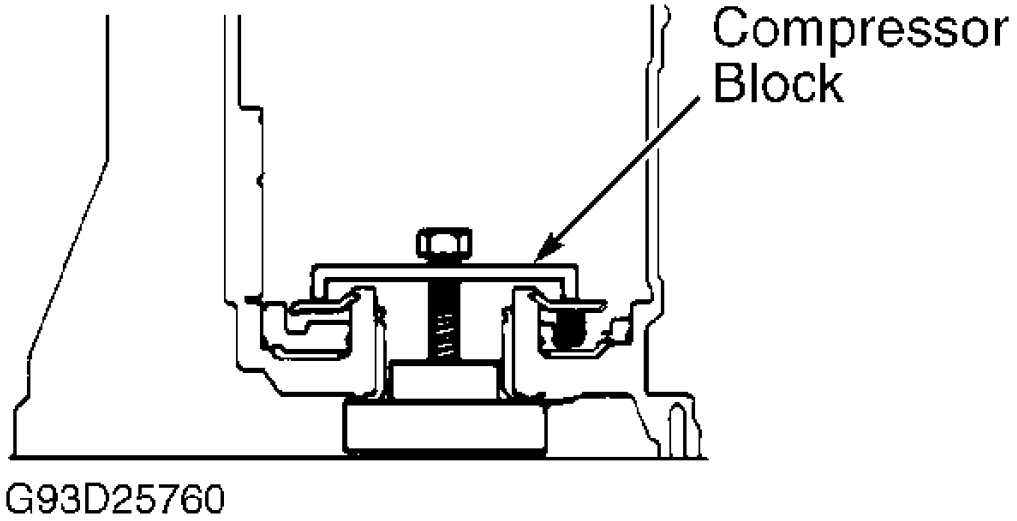

Fig. 16: Compressing 1st & Reverse Brake Piston Springs
Courtesy of TOYOTA MOTOR SALES, U.S.A., INC.

Differential & Drive Pinion Removal

1. Using INCH-lb. torque wrench, measure and record differential total preload. See **Fig. 17** . Remove left differential bearing retainer. Ensure case or retainer is not damaged if prying is necessary.
2. On A-540E and A-541E transaxles, remove right bearing retainer. On all transaxles, remove carrier cover bolts in crisscross pattern. Remove cover. Remove apply port gasket at lower portion of case. Remove differential assembly.
3. From converter side of case, remove drive pinion cap. Using INCH-lb. torque wrench, measure drive pinion preload. See **Fig. 17** . Starting preload should be 4.3-6.9 INCH lbs. (.5-.8 N.m). Subtract drive pinion preload from total preload.
4. If difference is not 1.1-1.7 INCH lbs. (about .1 N.m), differential side bearing preload may not have been within specification. Carefully inspect condition of all bearings and replace as needed. See appropriate component disassembly and reassembly procedure under OVERHAUL.
5. Bend back locking washer securing nut on drive pinion shaft. Secure driven gear and remove nut. Using appropriate puller, remove driven gear and bearing. Using appropriate 2-jaw puller, remove outer race, spacer and oil slinger. On A-540E transaxle, remove sensor rotor.
6. On all transaxles, remove snap ring. Turn transaxle case, converter side facing up. Install appropriate bar into hole in drive pinion. Press out drive pinion shaft. Remove bearing cage from drive pinion. Press off bearing if replacement is needed.

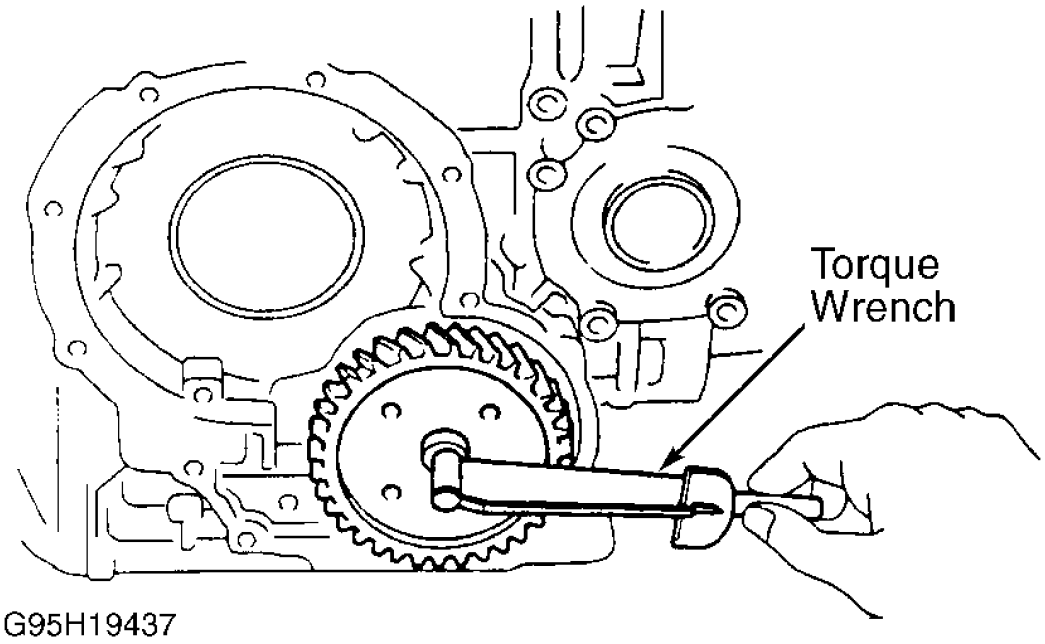

Fig. 17: Checking Driven Pinion Preload Or Total Preload
Courtesy of TOYOTA MOTOR SALES, U.S.A., INC.

MANUAL SHIFT LINKAGE DISASSEMBLY & REASSEMBLY

Disassembly & Reassembly

1. Remove parking lock pawl bracket. Using hammer and chisel, cut collar on manual valve shaft. Remove retaining spring. Drive out roll pin on shaft.
2. Slide out shaft from case and remove manual valve lever and parking lock rod. Remove shaft oil seal. Remove pin, spring and parking lock pawl.
3. To assemble, reverse disassembly procedure. Use NEW collar. Lubricate seal before installing manual valve lever shaft. Check operation of parking lock pawl.

OIL PUMP DISASSEMBLY & REASSEMBLY

Disassembly

Remove "O" ring and 2 oil seal rings from pump body and stator shaft. Remove clutch drum thrust washer from stator shaft. Remove bolts attaching oil pump body and stator shaft. Identify top and bottom and keep parts in order. Separate stator shaft and pump body. Mark gear locations for reassembly reference. See **Fig. 18** . Remove front seal.

Inspection

1. Check body clearance of driven gear. Push gear to one side of body. Measure body clearance. See **Fig. 19** . Clearance should be .0028-.0059" (.070-.150 mm). Maximum clearance is .012" (.30 mm). If worn beyond specification, replace pump body.
2. Check tip clearance of driven gear. Measure between gear teeth and crescent-shaped part of pump body. See **Fig. 19** . Tip clearance should be .0043-.0055" (.110-.140 mm). Maximum tip clearance is .012" (.30 mm). If tip clearance is greater than maximum specification, replace pump body.
3. Using a steel straightedge and feeler gauge, measure side clearance of both gears. See **Fig. 19** . Clearance should be .0008-.0020" (.020-.050 mm). Maximum side clearance is .004" (.10 mm). If worn beyond specification, replace pump body. Drive and driven gears are available in different thicknesses. See **OIL PUMP DRIVE & DRIVEN GEAR SPECIFICATIONS** table.

OIL PUMP DRIVE & DRIVEN GEAR SPECIFICATIONS

ID Mark	Thickness - In. (mm)
A-540E & A-541E	
A	.3717-.3723 (9.440-9.456)
B	.3723-.3730 (9.456-9.474)
C	.3730-.3736 (9.474-9.490)
A-540H	
F	.4209-.4212 (10.690-10.699)
G	.4213-.4216 (10.700-10.709)
H	.4217-.4220 (10.710-10.720)
J	.4221-.4224 (10.721-10.730)
K	.4225-.4228 (10.731-10.740)

4. Measure inside diameter of oil pump body bushing. Maximum inside diameter is 1.503" (38.18 mm). If inside diameter is greater than maximum specification, replace oil pump body. Measure inside diameter of stator shaft bushing. Maximum diameter of stator shaft bushing is .849" (21.57 mm). If worn beyond specification, replace stator shaft.

Reassembly

1. Install NEW oil seal. Seal is properly installed when it is flush with outer edge of pump body. Install driven gear and drive gear. Ensure identifying marks are facing upward. Install stator shaft on pump body. Align bolt holes. Install stator shaft-to-oil pump body bolts. Tighten bolts to specification. See **TORQUE SPECIFICATIONS** .
2. Align tab of washer with hollow of pump body. Install thrust washer. Install 2 oil seal rings on oil pump. DO NOT spread ring ends more than required for installation. Ensure oil seal rings move freely. Turn drive gear with screwdriver to ensure smooth rotation.

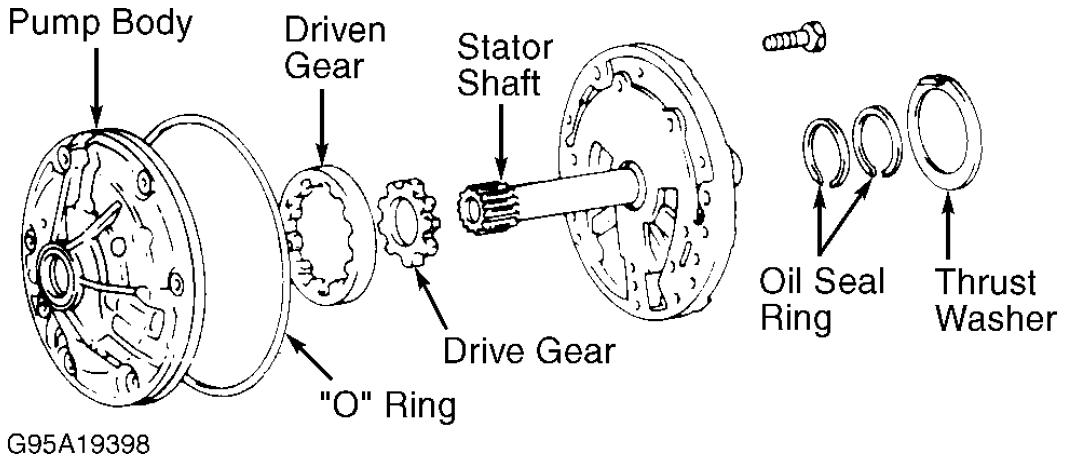

Fig. 18: Exploded View Of Oil Pump
Courtesy of TOYOTA MOTOR SALES, U.S.A., INC.

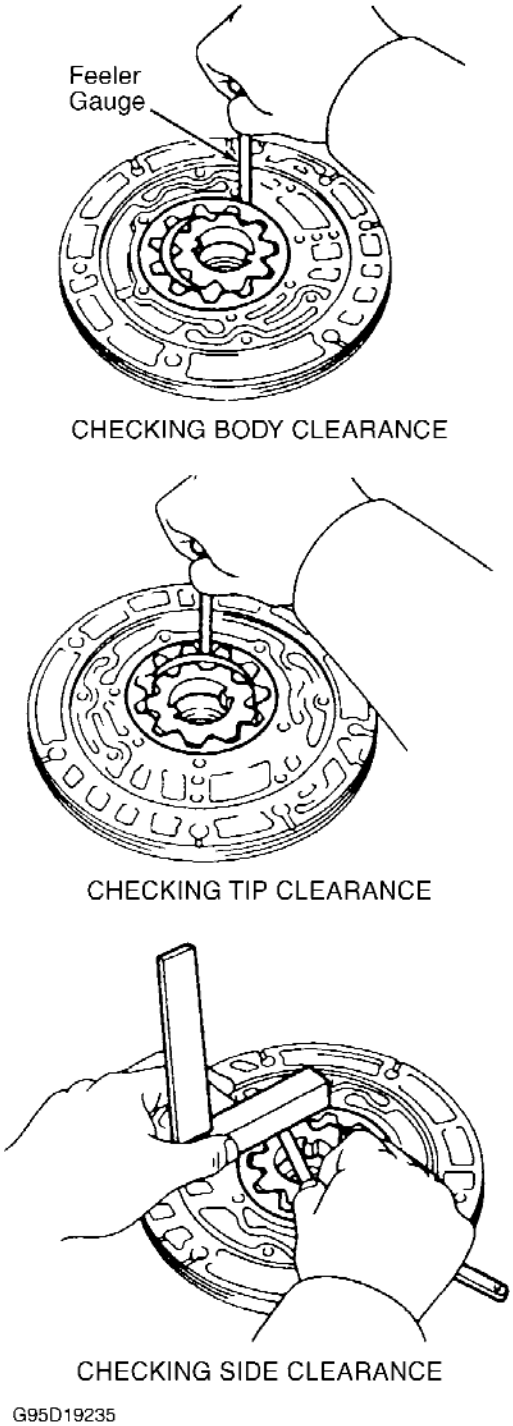

Fig. 19: Measuring Oil Pump Clearances
Courtesy of TOYOTA MOTOR SALES, U.S.A., INC.

DIRECT CLUTCH DISASSEMBLY & REASSEMBLY

Disassembly

1. Prior to disassembly, check piston stroke of direct clutch. Measure piston stroke by applying 57-114 psi (4-8 kg/cm^2) of compressed air. See **Fig. 20** . Piston stroke should be .036-.053" (.91-1.35 mm) for A-540E and A-541E transaxles or .044-.058" (1.11-1.47 mm) for A-540H transaxle. If piston stroke is greater than maximum, inspect each component.
2. Remove snap ring from clutch drum. Remove flange, discs and plates. Note number and location of components. See **Fig. 21** . Compress piston return springs and remove snap ring. Remove spring retainer. Slide direct clutch onto oil pump. Remove piston by applying low pressure compressed air. See **Fig. 20** . Remove direct clutch from oil pump. Remove "O" ring from clutch piston.

Inspection

Shake piston to ensure direct clutch piston check ball is free. Ensure valve does not leak by applying low pressure compressed air. Inspect discs, plates and flange. Measure inside diameter of direct clutch bushing. Maximum inside diameter is 1.900" (48.27 mm) for A-540E and A-541E transaxles or 1.853" (47.07 mm) for A-540H transaxle. If inside diameter is excessive, replace direct clutch.

Reassembly

1. Install NEW "O" rings on piston. Coat rings with ATF. Press piston in drum with cup side up. Ensure "O" ring is not damaged. Install piston return springs. Install retainer and snap ring.
2. Install plates, discs and flange. Install flange with flat side facing inward. Install outer snap ring. Ensure end gap of snap ring is not aligned with cut-outs in direct clutch drum.
3. Install direct clutch on oil pump. Check piston stroke. Using a dial indicator, measure piston stroke by applying and releasing 57-114 psi (4-8 kg/cm^2) of compressed air. See **Fig. 20** .
4. Piston stroke should be .036-.053" (.91-1.35 mm) for A-540E and A-541E transaxles or .044-.058" (1.11-1.47 mm) for A-540H transaxle. If piston stroke is less than specification, replace flange. Flange is available in thicknesses of .106" (2.70 mm) and .118" (3.00 mm) for A-540E and A-541E transaxles or .102" (2.60 mm), .110" (2.80 mm) and .118" (3.00 mm) for A-540H transaxle.

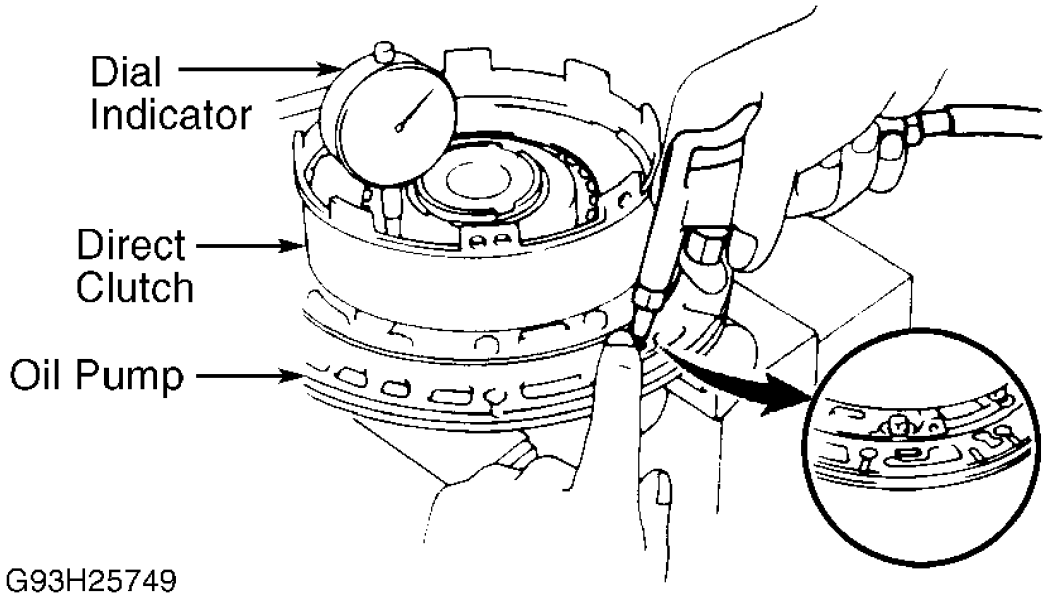

Fig. 20: Checking Direct Clutch Piston Stroke
Courtesy of TOYOTA MOTOR SALES, U.S.A., INC.

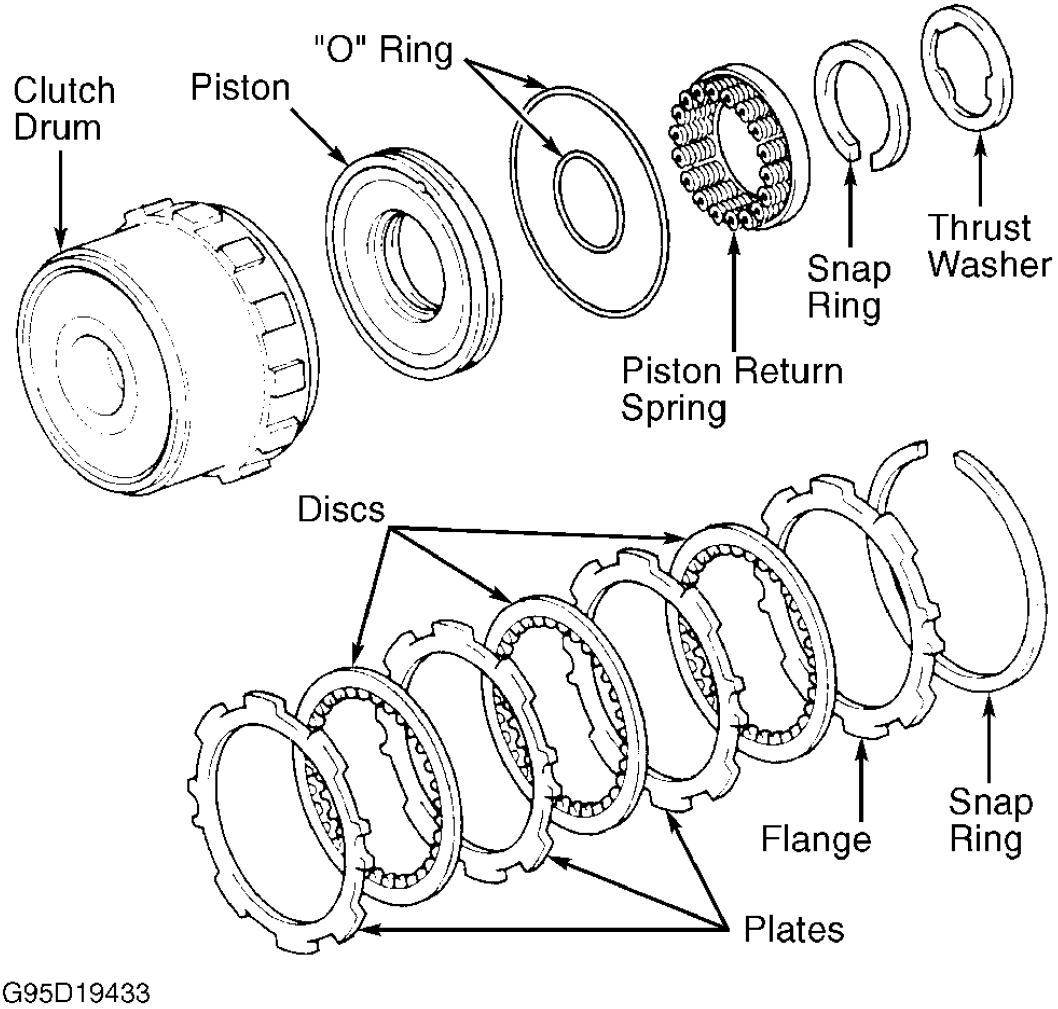

Fig. 21: Exploded View Of Direct Clutch
Courtesy of TOYOTA MOTOR SALES, U.S.A., INC.

FORWARD CLUTCH DISASSEMBLY & REASSEMBLY

Disassembly

1. Prior to disassembly, check piston stroke of forward clutch. Using a dial indicator, measure piston stroke by applying and releasing 57-114 psi (4-8 kg/cm^2) of compressed air. See **Fig. 22** . Piston stroke should be .071-.087" (1.79-2.21 mm) for A-540E and A-541E transaxles or .056-.072" (1.41-1.82 mm) for A-540H transaxle. If piston stroke is greater than maximum, inspect each component.
2. Remove snap ring from clutch drum. See **Fig. 23** . Remove flange, discs and plates. Note number and location of components. Using appropriate compressor, compress springs and remove snap ring. Remove return spring assembly. Remove retainer and springs. Apply compressed air to oil passage to remove

piston. If piston does not come out, remove piston with needle-nose pliers. Remove oil seal rings (if necessary).

Inspection

Inspect clutch piston. Shake piston to ensure check ball is free. Ensure valve does not leak by applying low pressure compressed air. Replace oil seal rings (if removed). DO NOT spread ring ends more than required for installation. Inspect discs, plates and flanges.

Reassembly

1. Coat NEW "O" rings with ATF. Install "O" rings on piston. Press piston into drum with cup side up. Ensure "O" ring is not damaged.
2. Install return springs, retainer and snap ring in drum. Compress retainer using compressor. Using pliers, install snap ring in groove. Ensure end gap of snap ring is not aligned with spring retainer claw.
3. Install plates, discs and flange. Install flange with flat end facing inward. Install outer snap ring. Ensure end gap of ring is not aligned with cut-outs in clutch drum.
4. Check piston stroke. Piston stroke should be .071-.087" (1.79-2.21 mm) for A-540E and A-541E transaxles or .056-.072" (1.41-1.82 mm) for A-540H transaxle. If piston stroke is less than specification, replace flange. Flange is available in thicknesses of .091" (2.30 mm) and 1.06" (2.70 mm) for A-540E and A-541E transaxles or .110" (2.80 mm), .118" (3.00 mm), .126" (3.20 mm), .134" (3.40 mm) and .142" (3.60 mm) for A-540H transaxle.

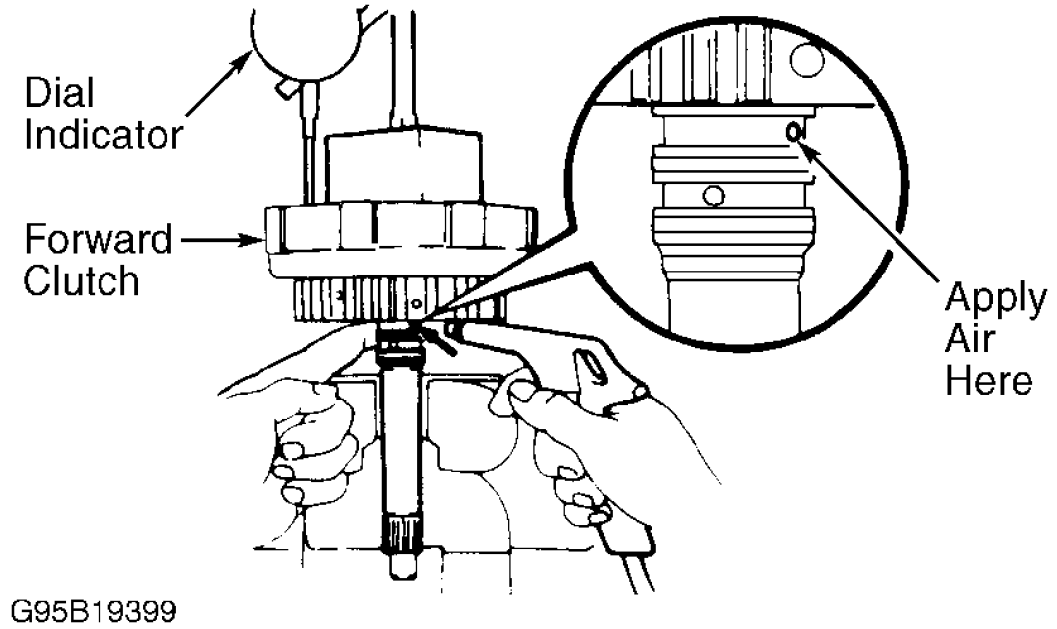

Fig. 22: Checking Forward Clutch Piston Stroke

Courtesy of TOYOTA MOTOR SALES, U.S.A., INC.

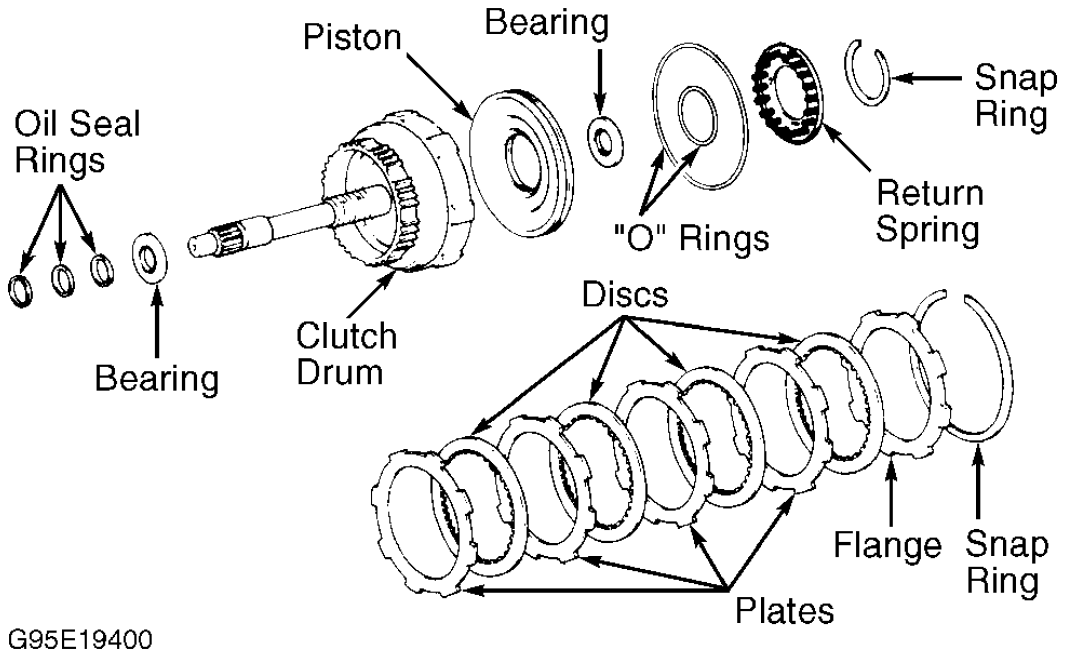

Fig. 23: Exploded View Of Forward Clutch
Courtesy of TOYOTA MOTOR SALES, U.S.A., INC.

FRONT PLANETARY GEAR DISASSEMBLY & REASSEMBLY

Disassembly

1. Check operation of No. 1 one-way clutch. Holding sun gear input drum (shell), turn hub. Hub should turn freely clockwise and should lock when turned counterclockwise. See **Fig. 24** .
2. While turning hub clockwise, remove No. 1 one-way clutch from sun gear. Remove thrust washer from sun gear input drum. Remove snap ring. Remove sun gear from drum. See **Fig. 25** .
3. Using a screwdriver, remove ring gear snap ring. Remove ring gear flange from ring gear. Remove front planetary gear from sun gear.

Inspection

1. Measure inside diameter of both sun gear bushings. Maximum inside diameter is .889" (22.59 mm) for A-540E and A-541E transaxles or. 870" (22.09 mm) for A-540H transaxle. If inside diameter exceeds specification, replace sun gear. Measure inside diameter of ring gear flange bushing. Maximum inside diameter is 1.184" (30.08 mm) for A-540E and A-541E transaxles or .752" (19.10 mm) for A-540H transaxle. If inside diameter exceeds specification, replace flange.
2. Measure planetary pinion gear thrust clearance. Standard clearance is .006-.022" (.16-.56 mm) for A-

540E and A-541E transaxles or .008-.020" (.20-.50 mm) for A-540H transaxle. See **Fig. 26** . Maximum clearance is .024" (.61 mm) for all transaxles. If clearance exceeds specification, replace planetary gear assembly.

Reassembly

Position flange into ring gear. Using a screwdriver, install snap ring. See **Fig. 25** . Install shaft snap ring on sun gear. Install sun gear input drum on sun gear. Install shaft snap ring. Install thrust washer on sun gear input drum. While turning hub clockwise, slide one-way clutch on sun gear. Recheck operation of one-way clutch.

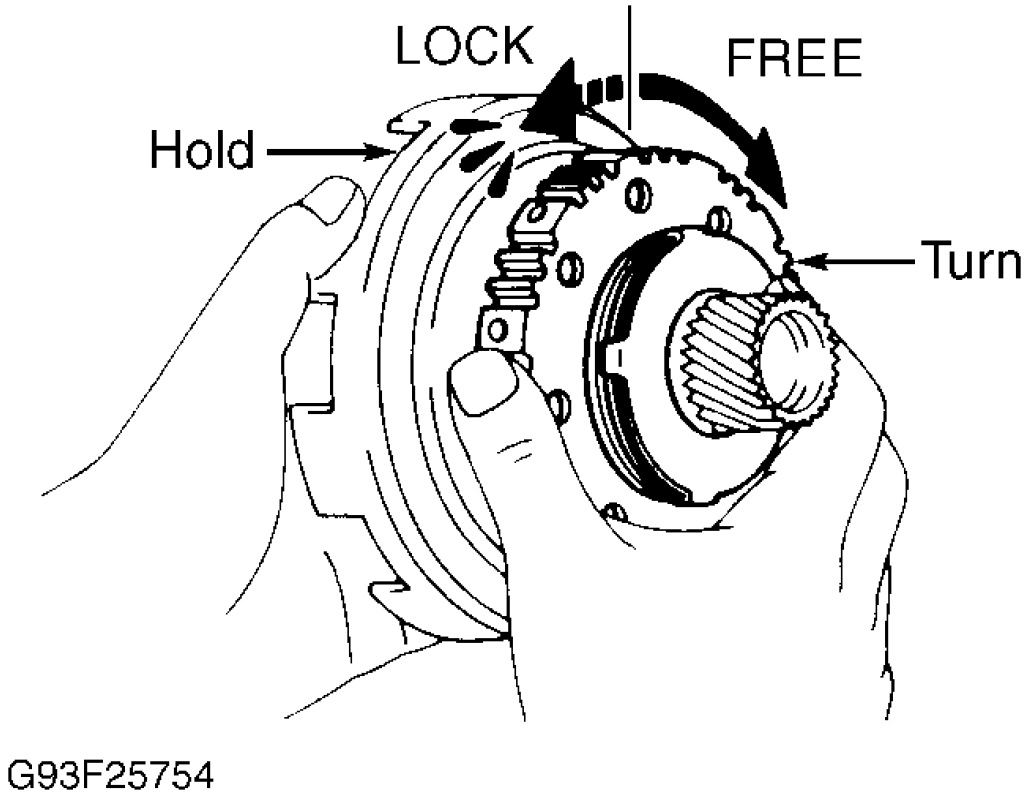

Fig. 24: Checking No. 1 One-Way Clutch Operation
Courtesy of TOYOTA MOTOR SALES, U.S.A., INC.

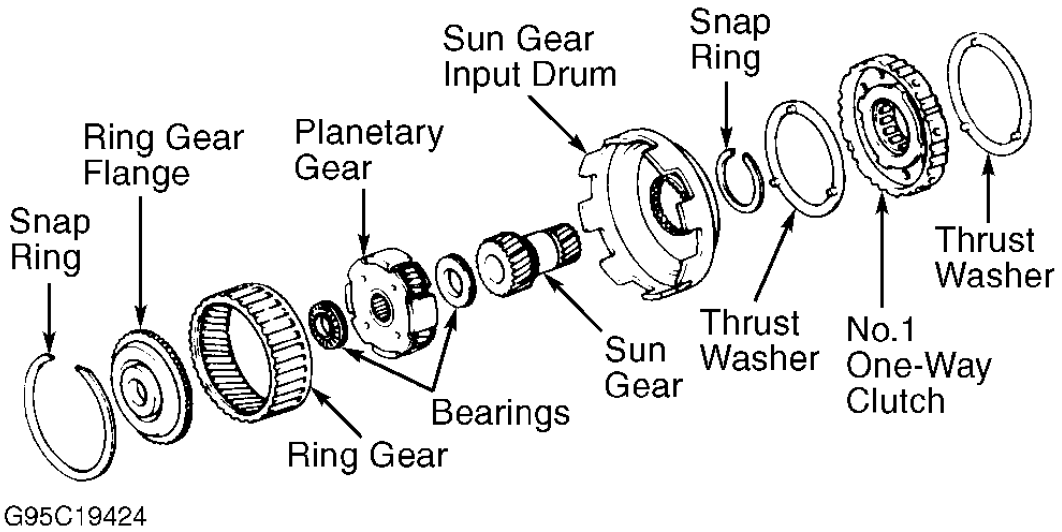

Fig. 25: Exploded View Of Front Planetary Gear
Courtesy of TOYOTA MOTOR SALES, U.S.A., INC.

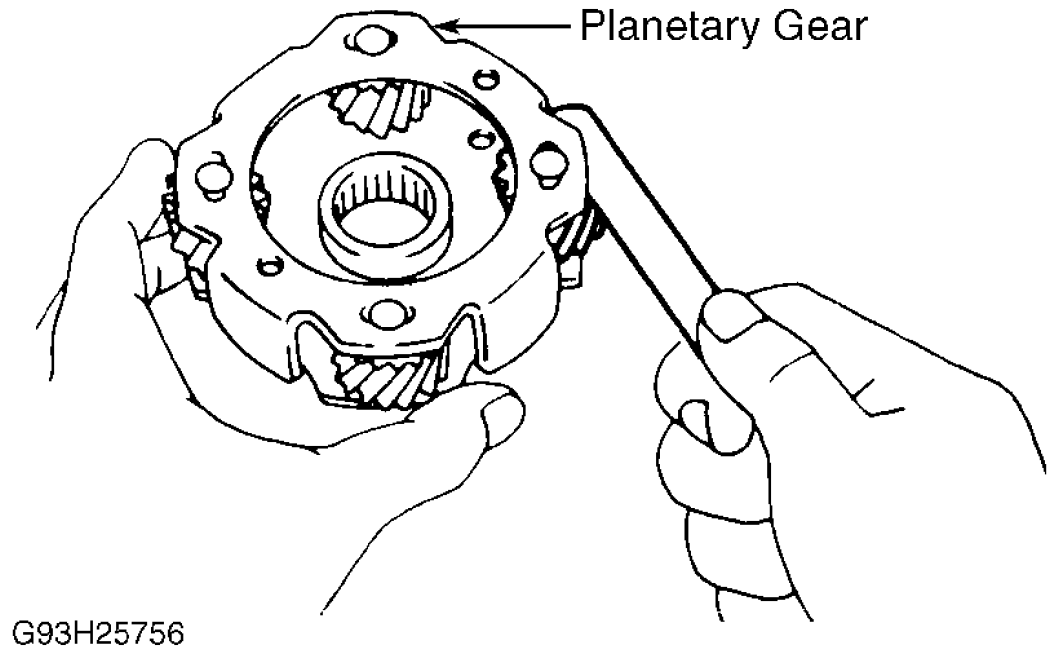

Fig. 26: Measuring Planetary Pinion Gear Thrust Clearance
Courtesy of TOYOTA MOTOR SALES, U.S.A., INC.

REAR PLANETARY GEAR DISASSEMBLY & REASSEMBLY

Disassembly

1. Check operation of No. 2 one-way clutch. Hold outer race and turn rear planetary gear. Gear should turn freely counterclockwise and should lock when turned clockwise. See **Fig. 27** . Separate No. 2 one-way clutch and rear planetary gear.
2. Remove thrust washer(s) from rear side of planetary gear. Remove snap rings and retainers from both sides. Remove No. 2 one-way clutch from outer race. See **Fig. 28** .

Inspection

Measure rear planetary pinion gear thrust clearance. Standard clearance is .006-.022" (.16-.56 mm) for A-540E and A-541E transaxles or .008-.020" (.20-.50 mm) for A-540H transaxle. Maximum clearance is .024" (.61 mm) for all transaxles. Replace planetary gear assembly if clearance is excessive.

Reassembly

1. Install No. 2 one-way clutch into outer race. Face No. 2 one-way clutch flanged side toward outer race shiny side. Install retainers and snap rings to both sides of No. 2 one-way clutch.
2. Install planetary gear into No. 2 one-way clutch facing inner race of planetary gear inward toward Black side of outer race. Check operation of No. 2 one-way clutch. Coat thrust washers with petroleum jelly. Install thrust washer on both sides of carrier. Align tab of washers with hollow of carrier.

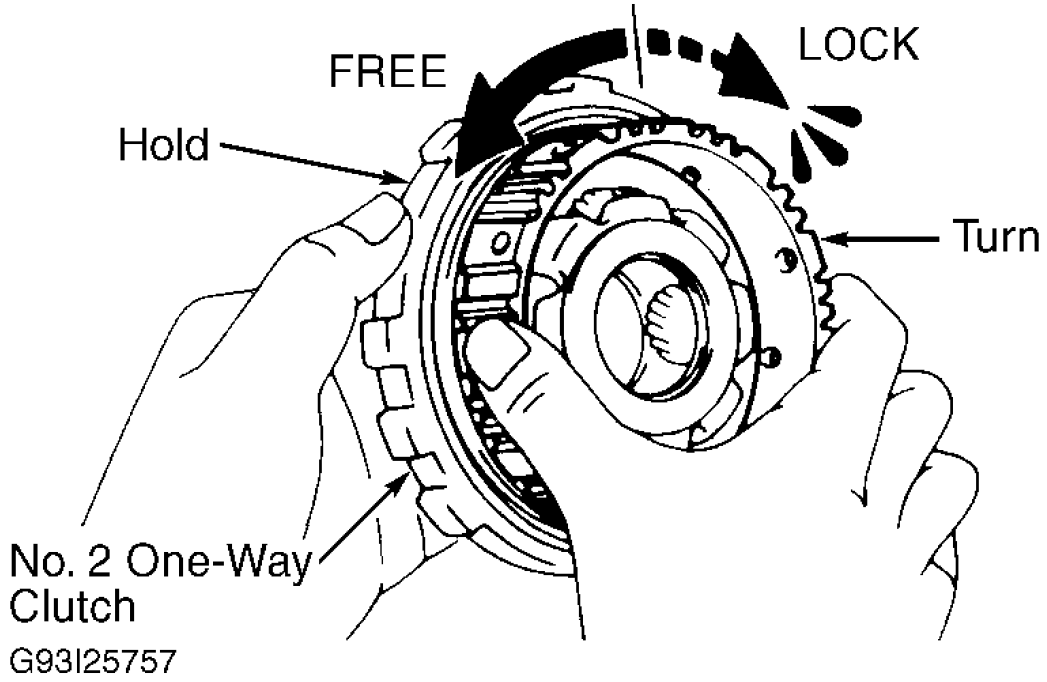

Fig. 27: Checking No. 2 One-Way Clutch Operation
Courtesy of TOYOTA MOTOR SALES, U.S.A., INC.

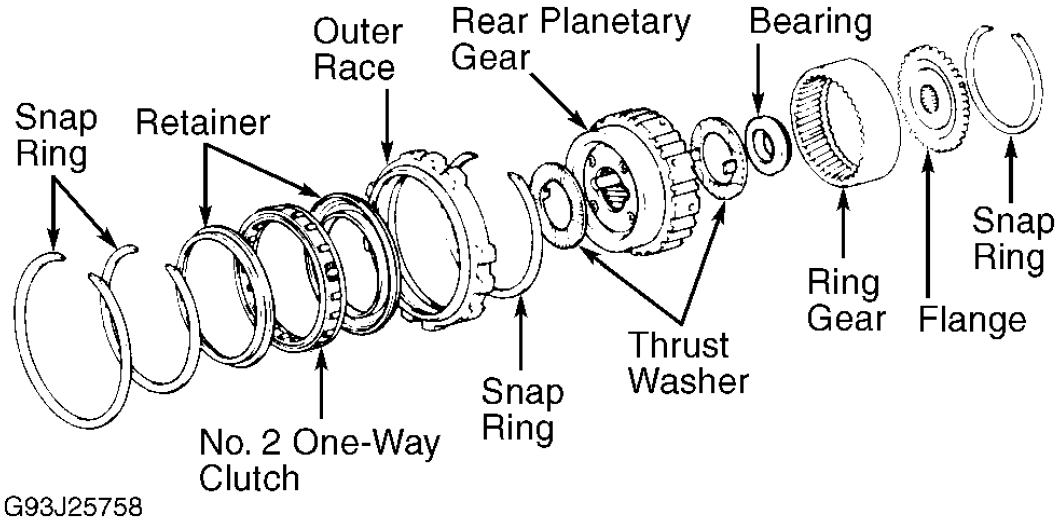

Fig. 28: Exploded View Of Rear Planetary Gear

Courtesy of TOYOTA MOTOR SALES, U.S.A., INC.

2ND BRAKE DISASSEMBLY & REASSEMBLY

Disassembly & Inspection

Apply compressed air to oil hole in 2nd brake piston to remove piston. Remove 2 "O" rings from piston. Inspect discs, plates and flange. See **Fig. 29** .

Reassembly

Coat NEW "O" rings with ATF. Install 2 "O" rings on piston. Press piston into drum, being careful not to damage "O" rings.

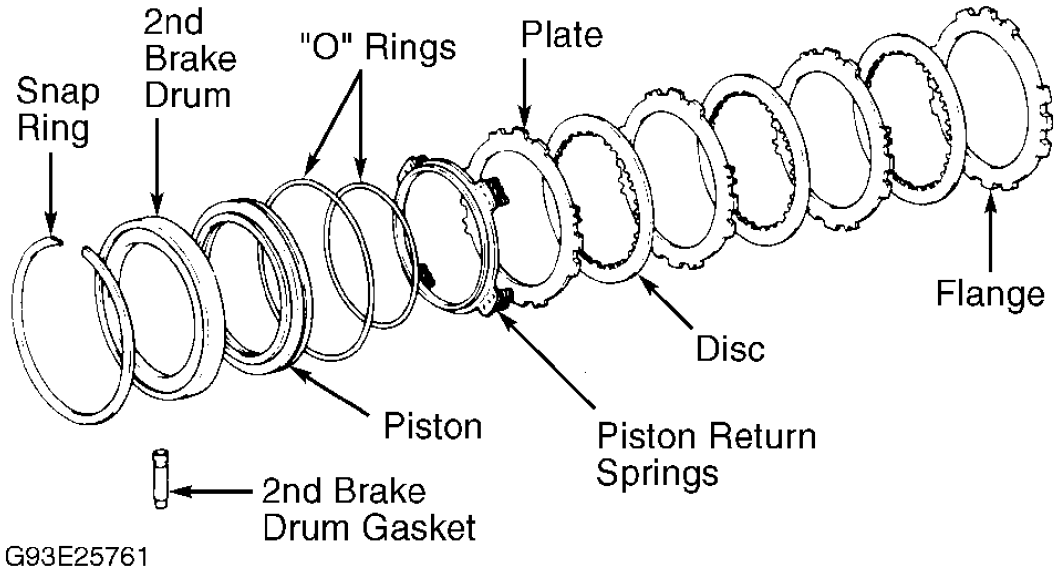

Fig. 29: Exploded View Of 2nd Brake
Courtesy of TOYOTA MOTOR SALES, U.S.A., INC.

2ND COAST BRAKE DISASSEMBLY & REASSEMBLY

Disassembly

Remove oil seal ring from piston. Remove piston rod "E" ring while pushing piston with needle-nose pliers. Remove inner spring, plate washer and piston rod. See **Fig. 30** .

Inspection

Inspect brake band lining condition. If brake band is serviceable but piston stroke is not within standard value,

select a new piston rod. Piston stroke should be .079-.138" (2.00-3.50 mm). Piston rod is available in lengths of 3.748" (95.20 mm) and 3.791" (96.30 mm).

Reassembly

Install plate washer and inner spring to piston rod. Install "E" ring while pushing piston. Apply ATF to oil seal ring. Install oil seal ring to piston. DO NOT spread ring ends more than necessary for installation.

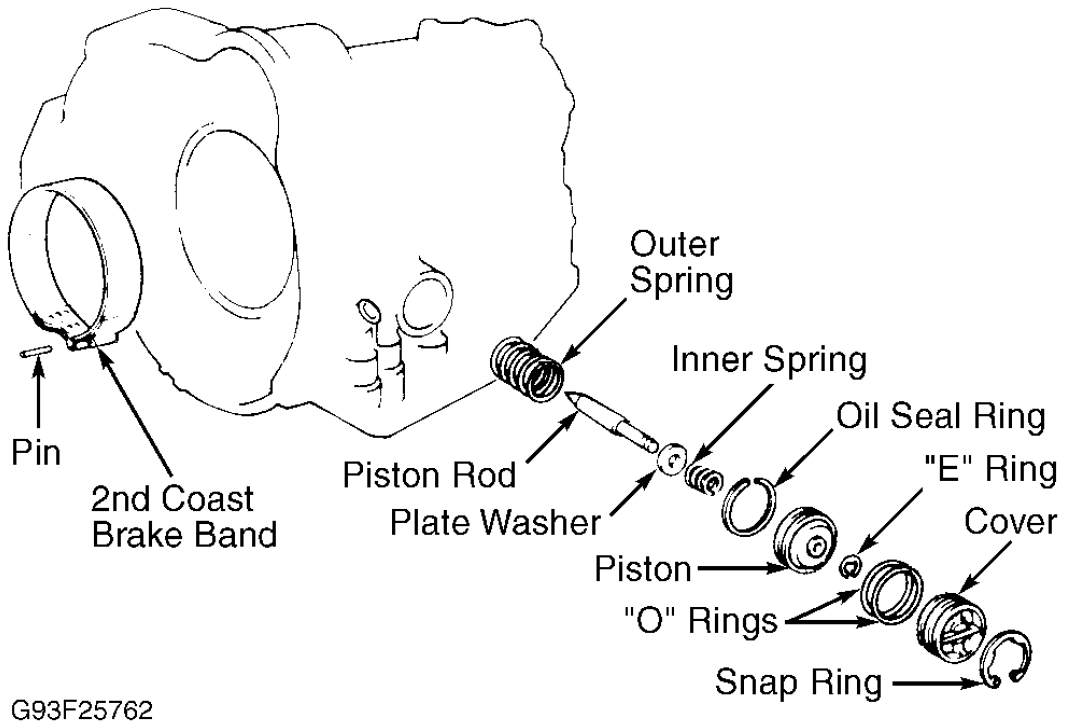

Fig. 30: Exploded View Of 2nd Coast Brake
Courtesy of TOYOTA MOTOR SALES, U.S.A., INC.

VALVE BODY ASSEMBLY DISASSEMBLY & REASSEMBLY

CAUTION: When disassembling valve body assembly, DO NOT damage or deform plate that overhangs valve body. Throttle pressure is changed according to number of rings behind throttle valve. Some valve bodies DO NOT have adjusting rings. Note which step at end of plunger sleeve is in contact with valve body before disassembly. Line pressure is affected by plunger location.

The following headings are used to identify valve bodies and component procedures:

- Disassembly (A-540E)
- Disassembly (A-540H)
- Disassembly (A-541E)
- Disassembly & Reassembly

(Upper Valve Body - A-540E, A-540H & A-541E)

- Disassembly & Reassembly

(Lower Valve Body - A-540E, A-540H & A-541E)

- Reassembly (Valve Body Assembly - A-540E)
- Reassembly (Valve Body Assembly - A-540H)
- Reassembly (Valve Body Assembly - A-541E)

Disassembly (A-540E)

1. Remove No. 1 and No. 2 solenoids. See **Fig. 31** . DO NOT use a screwdriver to pry up solenoid(s). Remove lock-up solenoid. Remove "O" ring(s) from solenoid(s).
2. Remove OD brake accumulator assembly. Remove check ball on No. 1 plate. Applying compressed air to accumulator cylinder hole, remove piston and spring. Remove 2 "O" rings from piston.
3. Remove bolts from upper valve body and cover. Note bolt length and location for reassembly reference. Remove upper valve body cover, oil strainer, gaskets and plate. Remove lock-up relay valve sleeve stopper. Turn assembly over.
4. Remove bolts from lower valve body and cover. Carefully remove lower valve body cover gaskets and plate. Note location of check balls, retainers, keys and pins in valve body.
5. Remove 2 check balls from lower valve body. Remove 1 bolt from lower valve body. Remove 3 bolts from upper valve body. Hold No. 1 plate to upper valve body. Lift off upper valve body and plate as a unit. DO NOT lose check balls, retainers and pins in lower valve body.

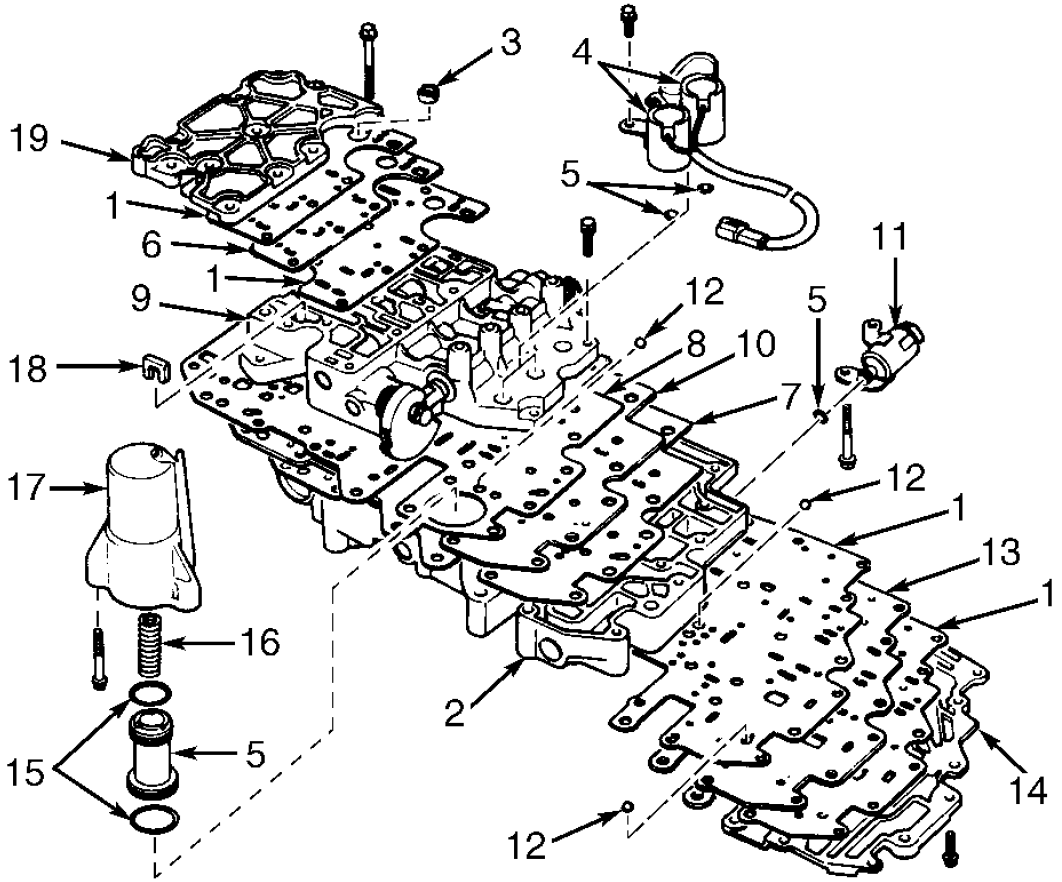

1. Gasket
2. Lower Valve Body
3. Strainer
4. Solenoid
5. "O" Ring
6. Plate
7. No. 2 Gasket
8. No. 1 Gasket
9. Upper Valve Body
10. No. 1 Plate
11. Lock-Up Solenoid
12. Check Ball
13. No. 2 Plate
14. Lower Valve Body Cover
15. Piston
16. Spring
17. Overdrive Brake Accumulator Cylinder
18. Lock-Up Relay Valve Sleeve Stopper
19. Upper Valve Body Cover

G99D03566

Fig. 31: Exploded View Of Valve Body Assembly (A-540E)
Courtesy of TOYOTA MOTOR SALES, U.S.A., INC.

Disassembly (A-540H)

1. Remove No. 1 and No. 2 solenoids. See **Fig. 32** . DO NOT use a screwdriver to pry up solenoid(s). Remove "O" ring(s) from solenoid(s). Remove shift solenoid valve SL. Remove shift solenoid valve ST with check valve sleeve. Remove shift solenoid valve ST from check valve sleeve.
2. Remove key, 2 check valves and check ball from check valve sleeve. Remove OD brake accumulator assembly. Applying compressed air to accumulator cylinder hole, remove piston and spring. Remove 2 "O" rings from piston.
3. Remove bolts from upper valve body and cover. Note bolt length and location for reassembly reference. Remove upper valve body cover, oil strainer, gaskets and plate. Remove lock-up relay valve sleeve stopper. Turn assembly over.
4. Remove bolts from lower valve body and cover. Carefully remove lower valve body cover gaskets and plate. Note location of check balls, retainers, keys and pins in valve body.
5. Remove 2 check balls from lower valve body. Remove 1 bolt from lower valve body. Remove 3 bolts from upper valve body. Hold No. 1 plate to upper valve body. Lift off upper valve body and plate as a unit. DO NOT lose steel balls, retainers and pins in valve body.

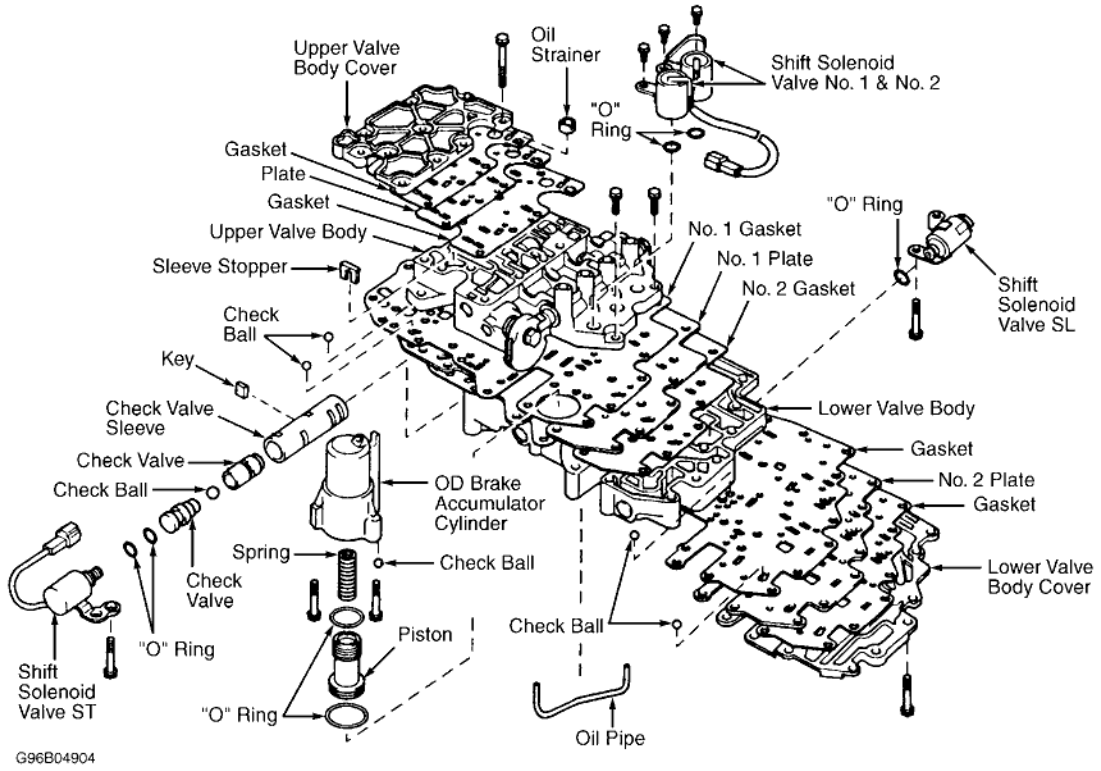

Fig. 32: Exploded View Of Valve Body Assembly (A-540H)
Courtesy of TOYOTA MOTOR SALES, U.S.A., INC.

Disassembly (A-541E)

1. Remove No. 1 and No. 2 solenoids with retainers. Remove No. 3 solenoid. Remove lock plate. Remove OD brake accumulator assembly. Apply compressed air to vent hole on side of accumulator cylinder to

remove piston. Remove No. 4 solenoid.

2. Remove lower valve body cover No. 1. See **Fig. 33** . Remove separator plate and gaskets. Remove oil strainer, check valve and spring. Remove pressure relief valve (plate, spring and check ball).
3. Remove lower valve body cover No. 2. Remove 2 check balls, oil strainer and vibrating stopper. Turn over No. 2 cover. Remove 2 screws and lift off separator plate and gaskets. Remove 3 check balls. See **Fig. 34** .
4. Remove bolts securing upper valve body. Lift off upper valve body and No. 1 separator plate as a single unit. Turn upper valve body over without allowing check balls to fall out. Remove separator plate. Remove check ball and vibrating stopper. Remove check balls and oil stainers from lower valve body.

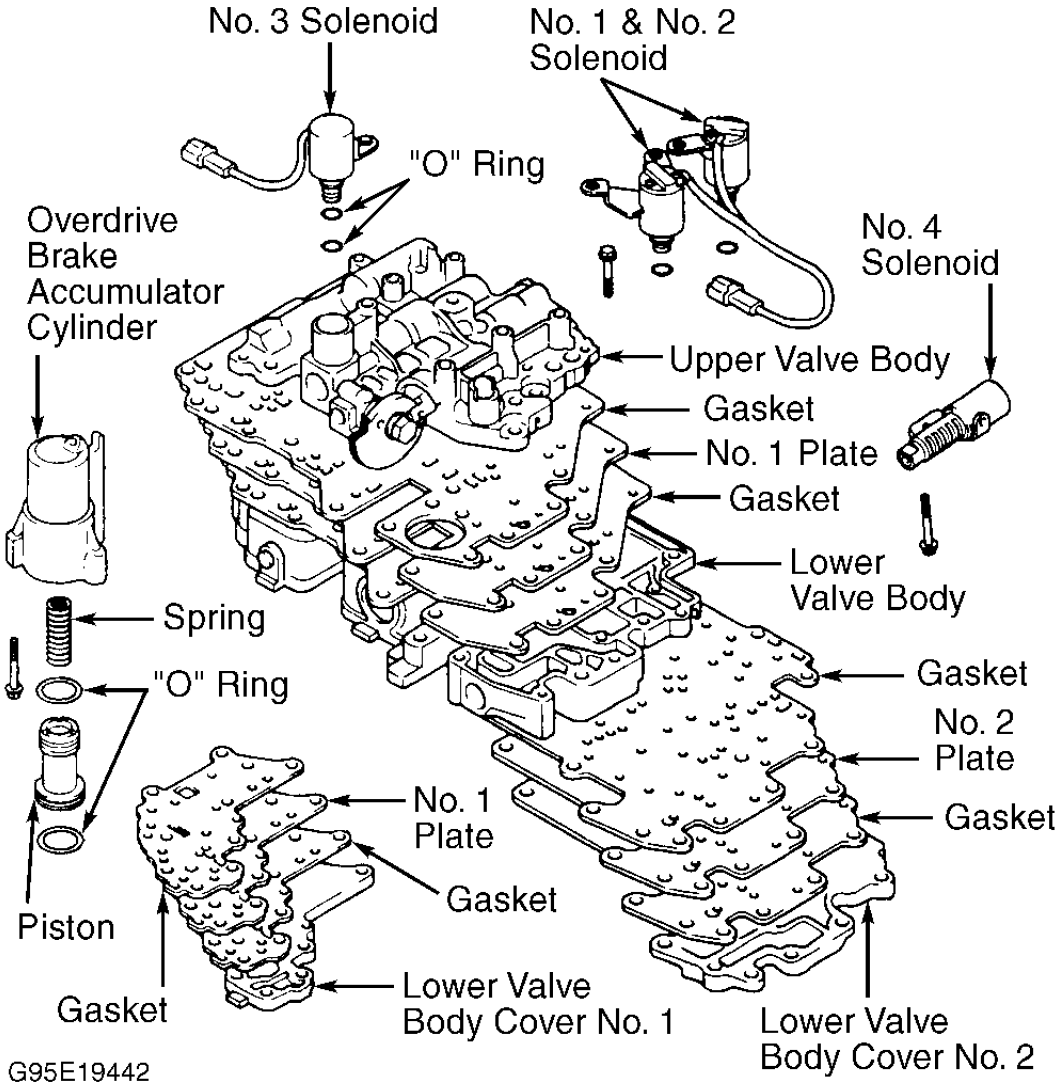

Fig. 33: Exploded View Of Valve Body Assembly (A-541E)
Courtesy of TOYOTA MOTOR SALES, U.S.A., INC.

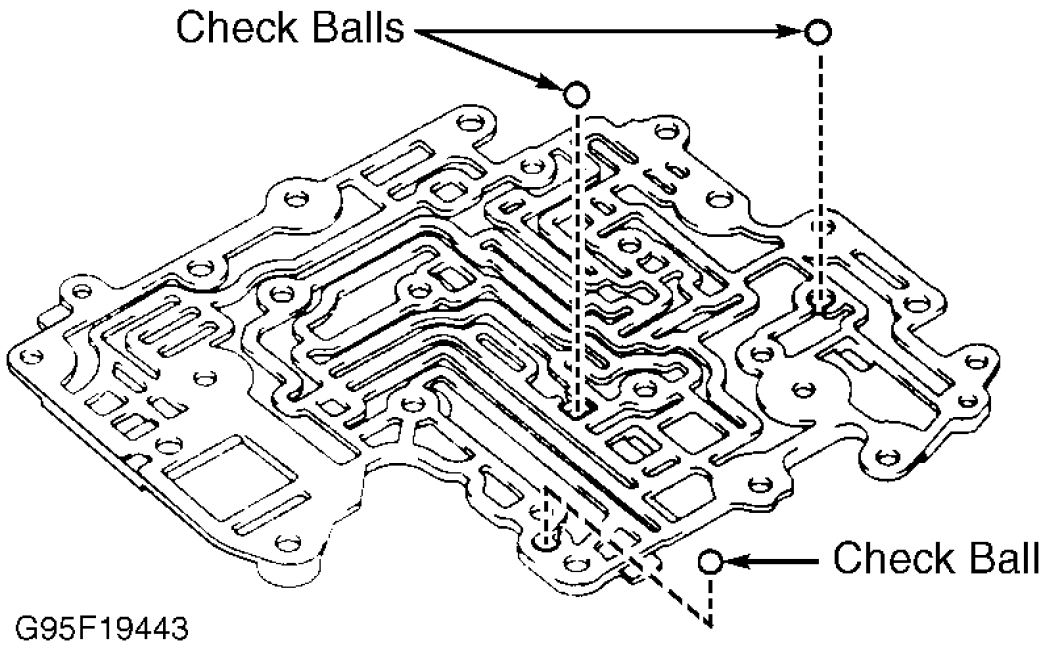

Fig. 34: Identifying Lower Valve Body Cover No. 2 Check Ball Locations (A-541E)
Courtesy of TOYOTA MOTOR SALES, U.S.A., INC.

Disassembly & Reassembly (Upper Valve Body A-540E, A-540H & A-541E)

1. When disassembling upper valve body, maintain parts in order for reassembly reference. Ensure each valve is kept with corresponding spring. Inspect valve springs for damage, squareness, rust and collapsed coils.
2. Measure upper valve body valve spring free height. Replace any spring if specification is exceeded. See appropriate **UPPER VALVE BODY VALVE SPRING SPECIFICATIONS** table. Clean all components with solvent and lubricate with ATF. For parts identification, see **Fig. 35** and **Fig. 36** .

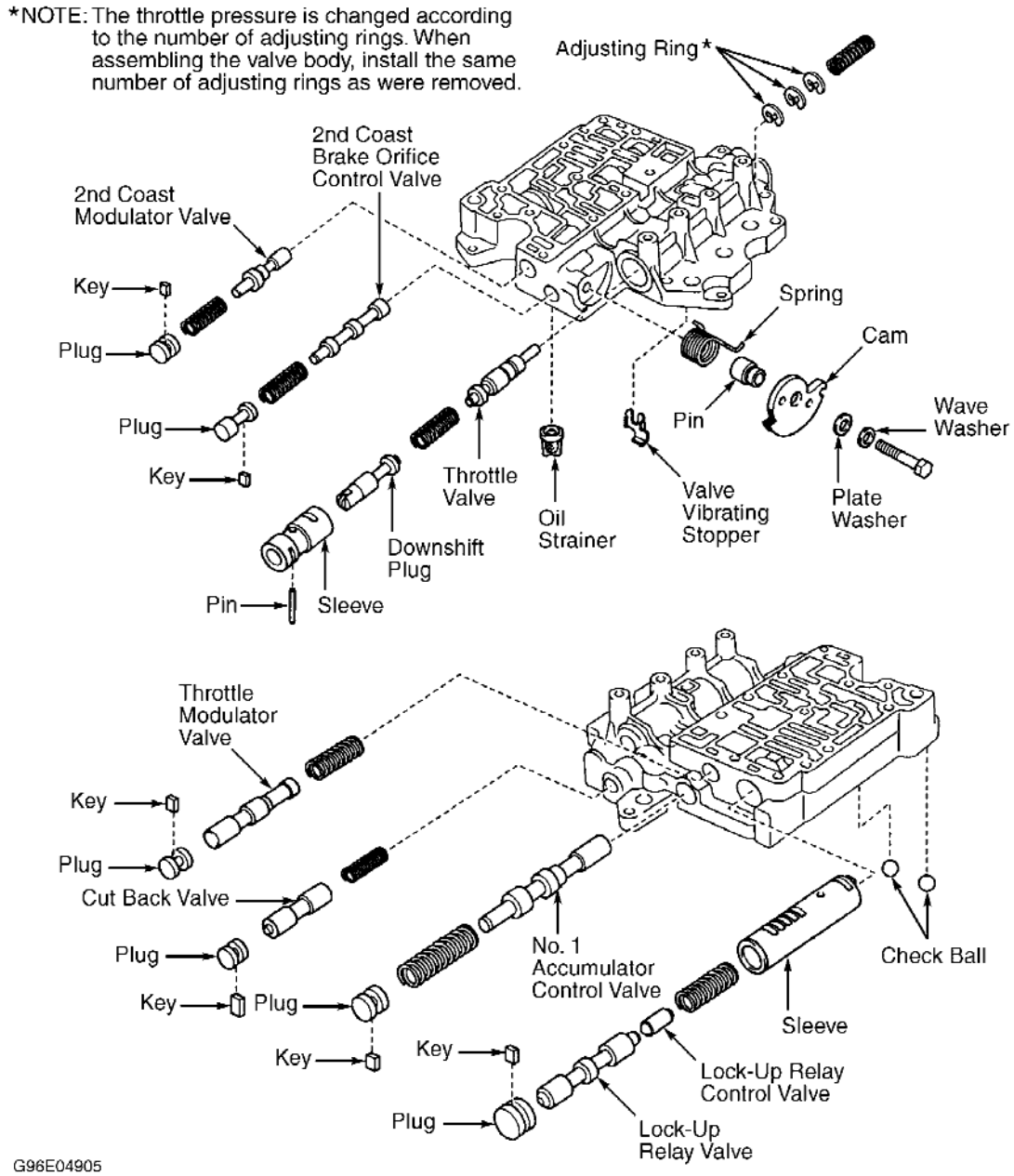

Fig. 35: Exploded View Of A-540E & A-540H Upper Valve Body (Viewed From Both Ends)
Courtesy of TOYOTA MOTOR SALES, U.S.A., INC.

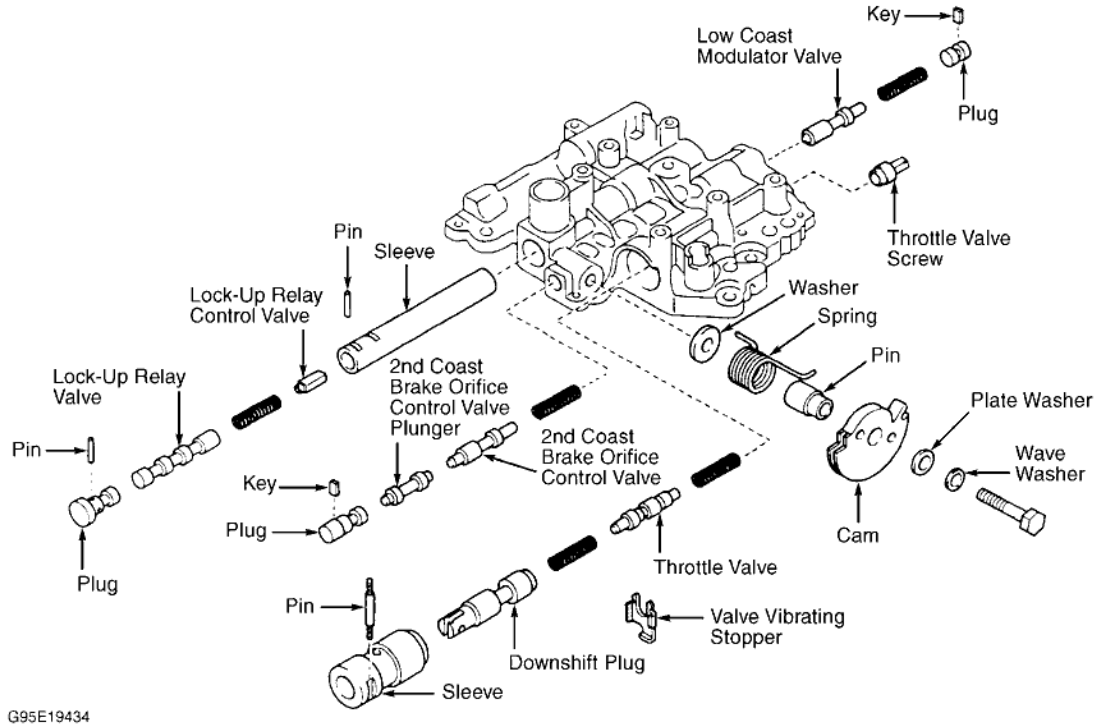

Fig. 36: Exploded View Of A-541E Upper Valve Body
Courtesy of TOYOTA MOTOR SALES, U.S.A., INC.

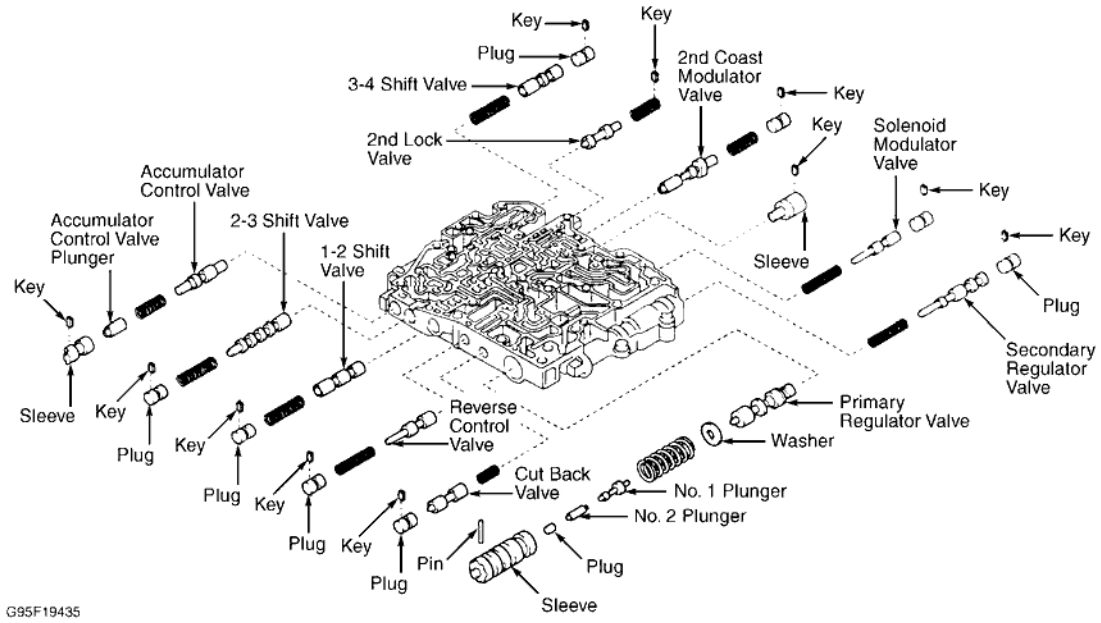

Fig. 37: Exploded View Of A-541E Lower Valve Body
Courtesy of TOYOTA MOTOR SALES, U.S.A., INC.

UPPER VALVE BODY VALVE SPRING SPECIFICATIONS

UPPER VALVE BODY VALVE SPRING SPECIFICATIONS (A-540E)

Application	Color	Free Height - In. (mm)
2nd Coast Modulator Valve	Brown	1.083 (27.50)
2nd Coast Brake Orifice Control Valve	White	.976 (24.80)
Downshift Plug	Yellow	1.012 (25.70)
Throttle Valve	Purple	1.209 (30.70)
Throttle Modulator Valve	Orange	.854 (21.70)
Cut-Back Valve	Red	.858 (21.80)
No. 1 Accumulator Control Valve	Yellow	1.106 (28.10)
Lock-Up Relay Valve	Green	1.047 (26.60)

UPPER VALVE BODY VALVE SPRING SPECIFICATIONS (A-540H)

Application	Color	Free Height - In. (mm)
2nd Coast Modulator Valve	Light Blue	1.126 (28.60)
2nd Coast Brake Orifice Control Valve	White	.976 (24.80)
Downshift Plug	Yellow	1.173 (29.80)
Throttle Valve	Purple	1.209 (30.70)
Throttle Modulator Valve	Orange	.854 (21.70)
Cut-Back Valve	Red	.858 (21.80)
No. 1 Accumulator Control Valve	Blue	.992 (25.20)
Lock-Up Relay Valve	Green	1.047 (26.60)

UPPER VALVE BODY VALVE SPRING SPECIFICATIONS (A-541E)

Application	Color	Free Height - In. (mm)
Lock-Up Relay Valve	Yellow	1.055 (26.80)
2nd Coast Brake Orifice Control Valve	White	.976 (24.80)
Throttle Valve	Green	1.240 (31.50)
Downshift Plug	None	.591 (15.00)
Low Coast Modulator Valve	Purple	.795 (20.20)

NOTE: **On A-540H transaxle, line pressure changes according to part of plunger sleeve which comes into contact with retainer. When reassembling lower valve body, align retainer in same position.**

Disassembly & Reassembly (Lower Valve Body A-540E, A-540H & A-541E)

1. When disassembling lower valve body, maintain parts in order for reassembly reference. Ensure each valve is kept with corresponding spring. Inspect valve springs for damage, squareness, rust and collapsed coils.
2. Measure lower valve body valve spring free height. Replace any spring if specification is exceeded. See

appropriate **LOWER VALVE BODY VALVE SPRING SPECIFICATIONS** table.

LOWER VALVE BODY VALVE SPRING SPECIFICATIONS

LOWER VALVE BODY VALVE SPRING SPECIFICATIONS (A-540E)

Application	Color	Free Height - In. (mm)
Pressure Relief Valve	None	.441 (11.20)
Check Valve	None	.783 (19.90)
Secondary Regulator Valve	Purple	1.516 (38.50)
No. 2 Accumulator Valve	Gray	.906 (23.00)
2nd Lock Valve	Orange	.815 (20.70)
3-4 Shift Valve	Light Green	1.150 (29.20)
Low Coast Modulator Valve	Purple	.795 (20.20)
1-2 Shift Valve	None	1.319 (33.50)
2-3 Shift Valve	None	1.102 (28.00)
Primary Regulator Valve	None	2.528 (64.20)

LOWER VALVE BODY VALVE SPRING SPECIFICATIONS (A-540H)

Application	Color	Free Height - In. (mm)
Pressure Relief Valve	None	.441 (11.20)
Check Valve	None	.783 (19.90)
Secondary Regulator Valve	Purple	1.516 (38.50)
No. 2 Accumulator Valve	Gray	.906 (23.00)
2nd Lock Valve	Orange	.815 (20.70)
3-4 Shift Valve	Light Green	1.150 (29.20)
Low Coast Modulator Valve	Purple	.795 (20.20)
1-2 Shift Valve	Light Green	1.150 (29.20)
2-3 Shift Valve	None	1.102 (28.00)
Primary Regulator Valve	None	2.528 (64.20)

LOWER VALVE BODY VALVE SPRING SPECIFICATIONS (A-541E)

Application	Color	Free Height - In. (mm)
Accumulator Control Valve	Red	.988 (25.10)
2-3 Shift Valve	None	1.102 (28.00)
1-2 Shift Valve	Light Green	1.150 (29.20)
Reverse Control Valve	White/Purple	1.50 (38.1)
Cut-Back Valve	None	.858 (21.80)
Primary Regulator Valve	None	1.441 (36.60)
3-4 Shift Valve	None	1.102 (28.0)
2nd Lock Valve	None	.815 (20.70)
2nd Coast Modulator Valve	White	1.268 (32.20)

Solenoid Modulator Valve	Purple/Pink	1.189 (30.20)
Secondary Regulator Valve	None	1.846 (46.90)

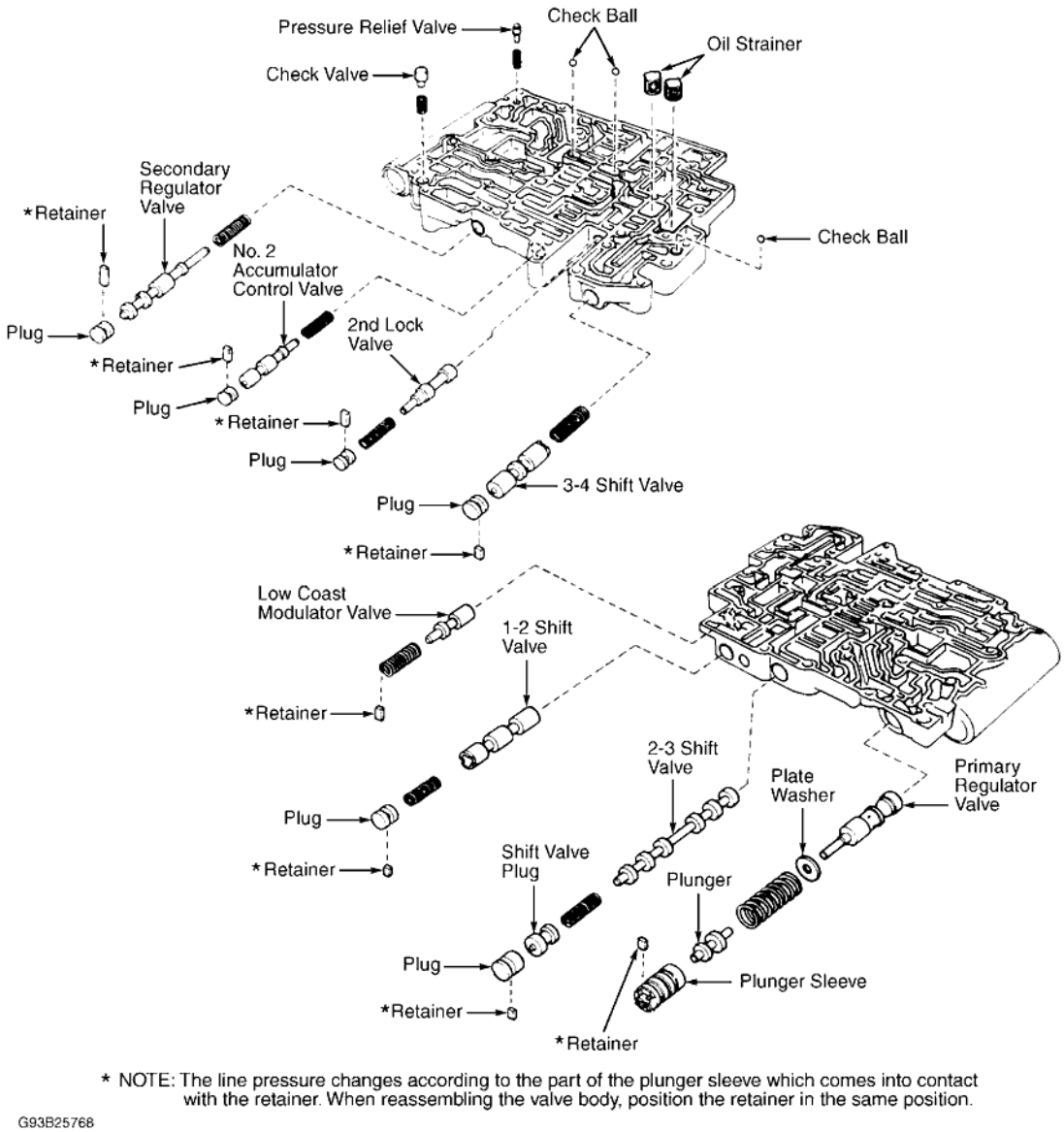

Fig. 38: Exploded View Of A-540H Lower Valve Body (Viewed From Both Ends)
Courtesy of TOYOTA MOTOR SALES, U.S.A., INC.

Reassembly (Valve Body Assembly A-540E)

1. Position NEW No. 1 gasket, No. 1 separator plate and NEW No. 2 gasket on upper valve body. For gasket identification, see **Fig. 39** . Ensure check balls are correctly installed in lower valve body (bottom). See **Fig. 41** . Place upper valve body with No. 1 plate and gaskets on lower valve body.
2. Hold upper valve body, No. 1 plate and gaskets so they do not separate. Align each bolt hole in valve

bodies with gaskets and plate. Note length and location of bolts. Install and finger tighten 3 bolts in upper valve body to secure lower valve body. See **Fig. 42** .

3. Install lock-up relay valve sleeve stopper. Install upper valve body cover gaskets, plate and throttle modulator oil strainer. Install upper valve body cover, and finger tighten 11 bolts in valve body cover. See **Fig. 42** . Install and finger tighten bolts in lower valve body.
4. Install check balls into lower valve body (top). See **Fig. 40** . Install NEW lower valve body cover gaskets and No. 2 plate. Install lower valve body cover and finger tighten 12 bolts in valve body cover. Tighten bolts to specification. See **TORQUE SPECIFICATIONS** .
5. Coat NEW "O" rings with ATF. Install "O" rings on piston. Insert spring and piston into cylinder. Place check ball on No. 1 gasket. Install accumulator. Install and tighten 3 bolts. Install lock-up solenoid. Install No. 1 and No. 2 shift solenoids.

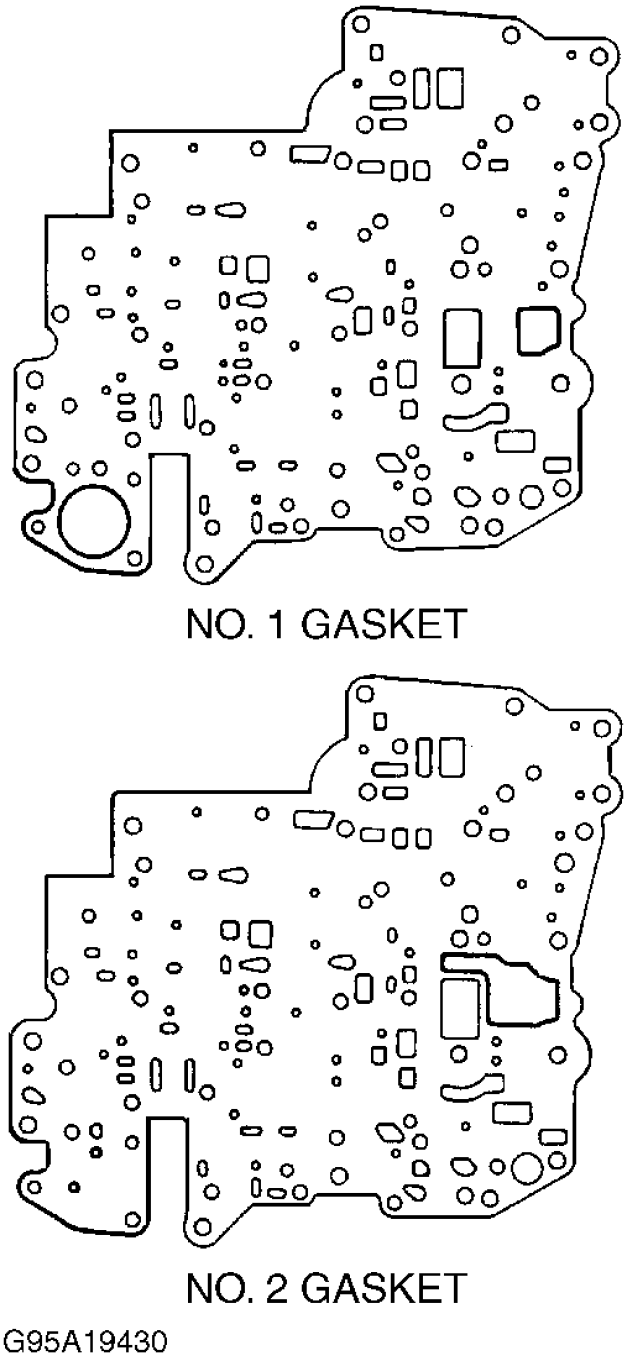

Fig. 39: Identifying A-540E Valve Body Gaskets
Courtesy of TOYOTA MOTOR SALES, U.S.A., INC.

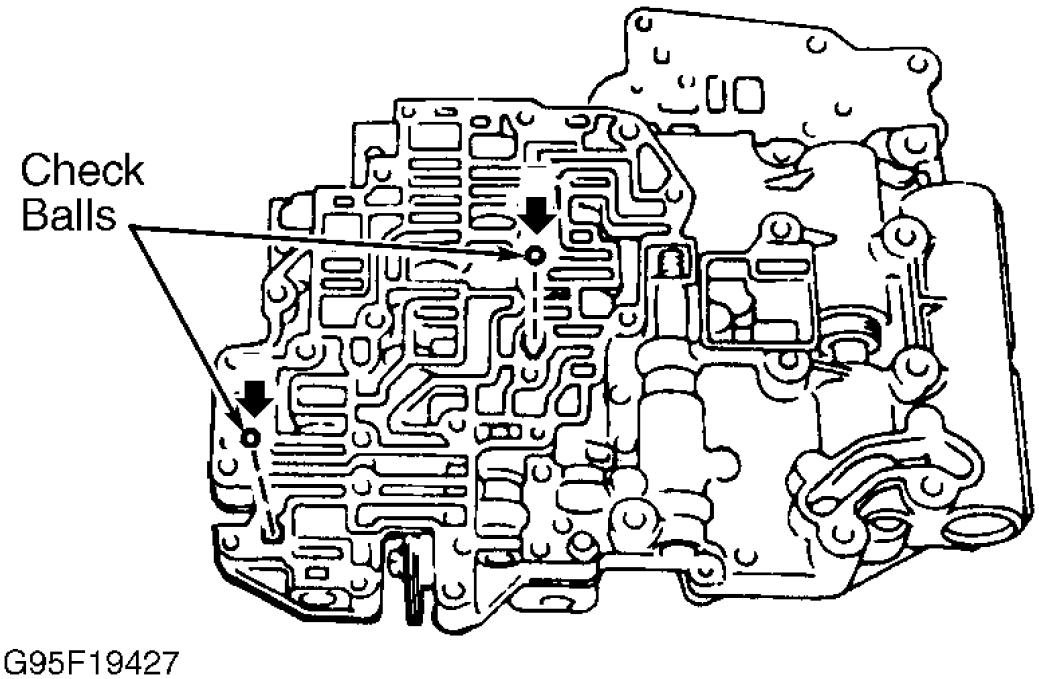

Fig. 40: Locating A-540E Lower Valve Body (Top) Check Balls
Courtesy of TOYOTA MOTOR SALES, U.S.A., INC.

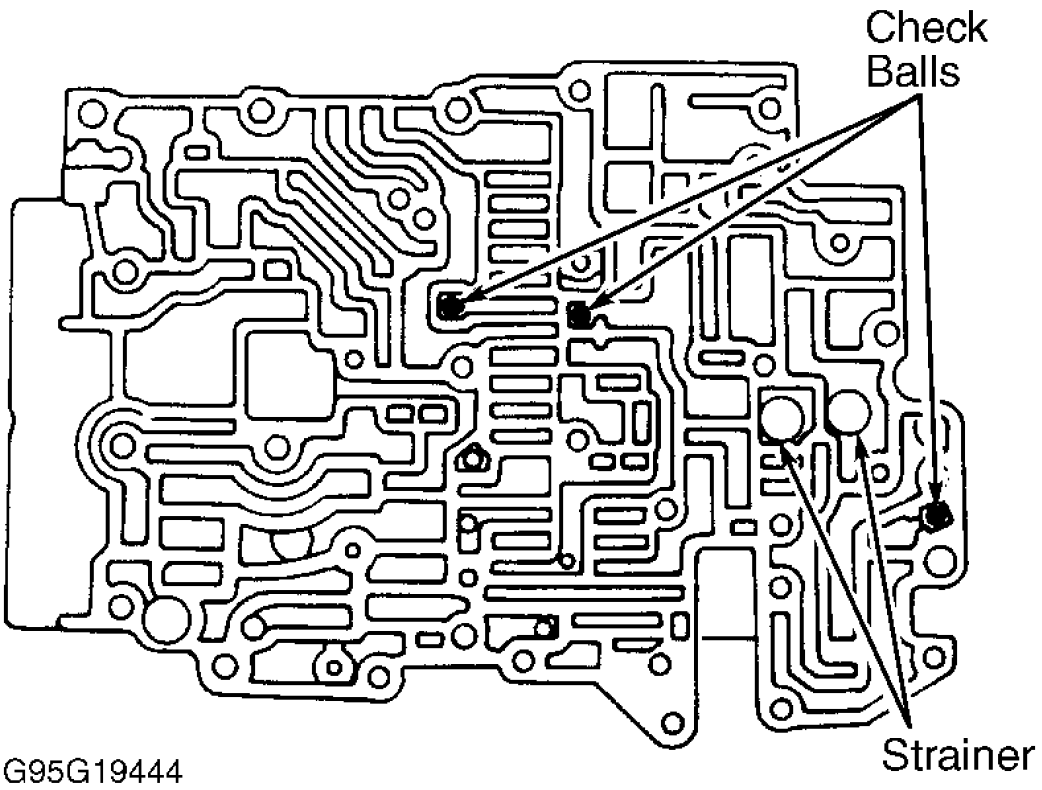

Fig. 41: Locating A-540E Lower Valve Body (Bottom) Check Balls
Courtesy of TOYOTA MOTOR SALES, U.S.A., INC.

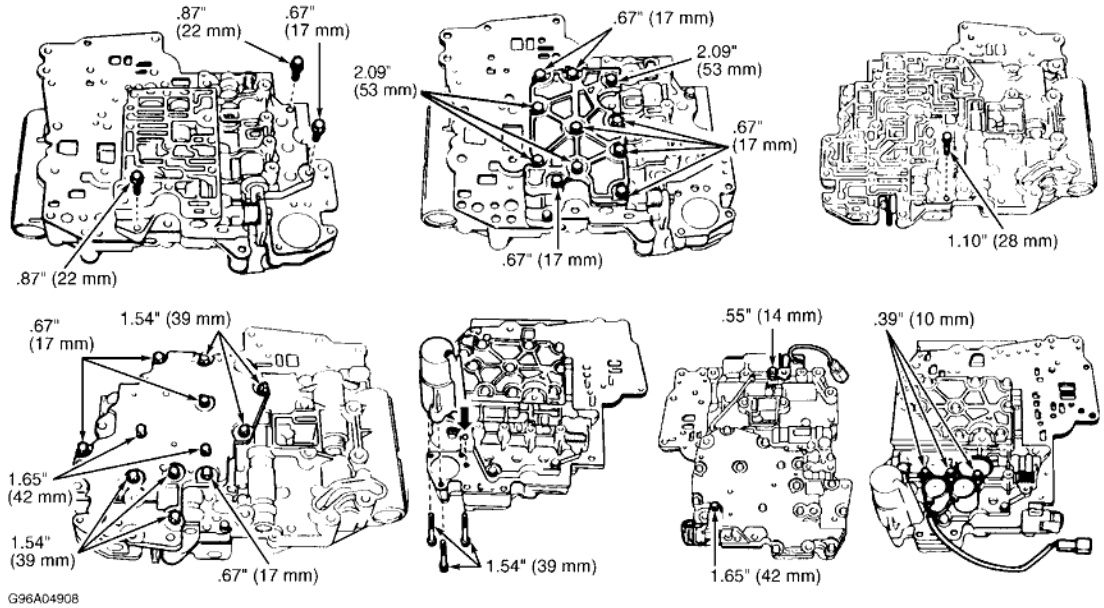

Fig. 42: Locating A-540E & A-540H Valve Body Bolts
Courtesy of TOYOTA MOTOR SALES, U.S.A., INC.

Reassembly (Valve Body Assembly A-540H)

1. Position NEW No. 1 gasket, No. 1 separator plate and NEW No. 2 gasket on upper valve body. For gasket identification, see **Fig. 43** . Ensure check balls are correctly installed. See **Fig. 44** . Place upper valve body with No. 1 plate and gaskets on lower valve body.
2. Hold upper valve body, No. 1 plate and gaskets so they do not separate. Align each bolt hole in valve bodies with gaskets and plate. Note length and location of bolts. Install and finger tighten 3 bolts in upper valve body to secure lower valve body. See **Fig. 42** .
3. Install lock-up relay valve sleeve stopper. Install upper valve body cover gaskets, plate and throttle modulator oil strainer. Install upper valve body cover, and finger tighten 11 bolts in valve body cover. See **Fig. 42** . Install and finger tighten bolts in lower valve body.
4. Install check balls into lower valve body. Install NEW lower valve body cover gaskets and No. 2 plate. Install NEW lower valve body cover and finger tighten 12 bolts in valve body cover. Tighten bolts to specification. See **TORQUE SPECIFICATIONS** .
5. Coat NEW "O" rings with ATF. Install "O" rings on piston. Insert spring and piston into cylinder. Place check ball on No. 1 gasket. Install accumulator. Install and tighten 2 bolts. Install shift solenoids valves SL and ST. Install No. 1 and No. 2 shift solenoids.

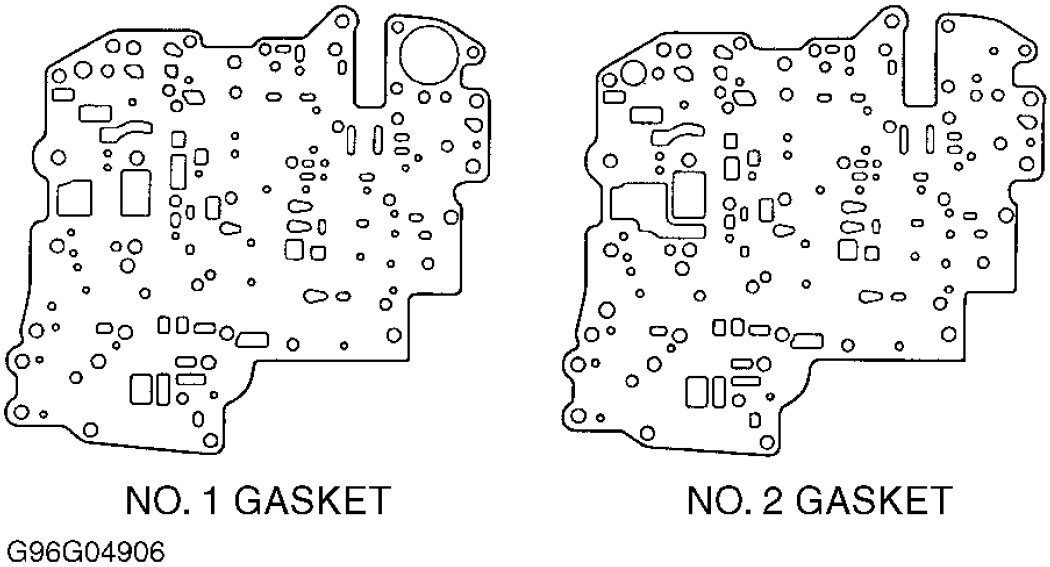

Fig. 43: Identifying A-540H Valve Body Gaskets
Courtesy of TOYOTA MOTOR SALES, U.S.A., INC.

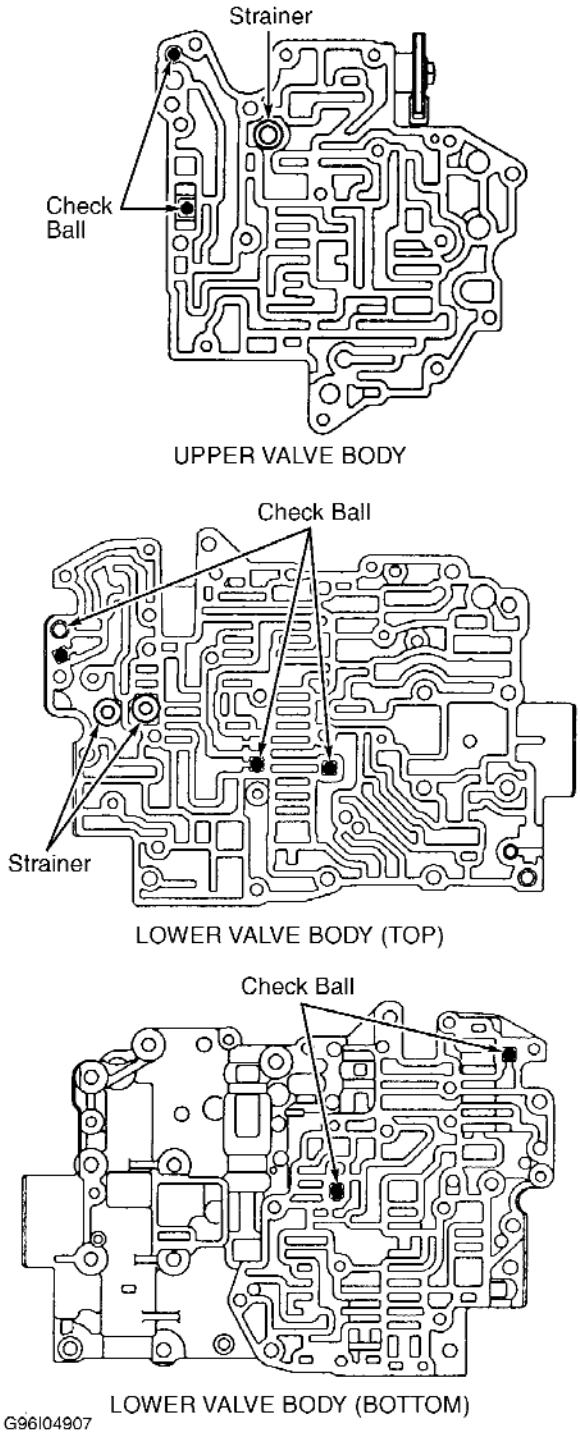

Fig. 44: Locating A-540H Valve Body Check Balls
Courtesy of TOYOTA MOTOR SALES, U.S.A., INC.

Reassembly (Valve Body Assembly A-541E)

1. Install check ball and vibrating stopper to upper valve body. See **Fig. 45** . Install oil strainers and check ball to lower valve body (top). See **Fig. 46** . Position No. 1 gasket against upper valve body. See **Fig. 48** . Place separator plate and No. 2 gasket on No. 1 gasket.
2. Hold gasket and plate assembly against upper valve body. Turn assembly over and install on lower valve body assembly. Align bolt holes and install bolts. See **Fig. 49** .
3. Install 3 check balls in lower valve body cover No. 2. See **Fig. 34** . Place gaskets and separator plate on valve body. Secure in place with screws. Install oil strainer, check balls and vibrating stopper in lower valve body (bottom). See **Fig. 47** . Install lower valve body cover No. 2. Align bolt holes and install bolts. See **Fig. 49** .
4. Install oil strainer and check valve in lower valve body. Install lower valve body cover No. 1 with gaskets and separator plate. Install bolts. Tighten all retaining bolts to specification. See **TORQUE SPECIFICATIONS** .
5. Install pressure relief valve. Tighten 3 upper valve body bolts. Install OD brake accumulator assembly. Install lock plate. Install all solenoids.

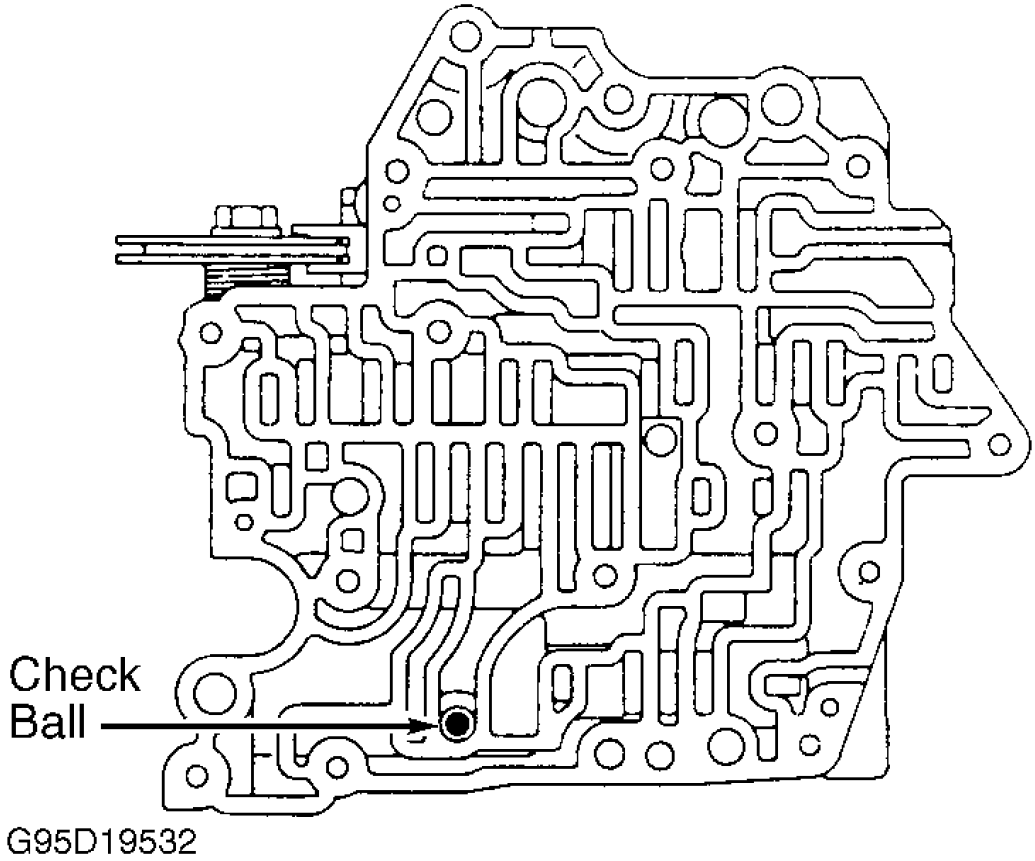

Fig. 45: Locating A-541E Upper Valve Body Check Balls

Courtesy of TOYOTA MOTOR SALES, U.S.A., INC.

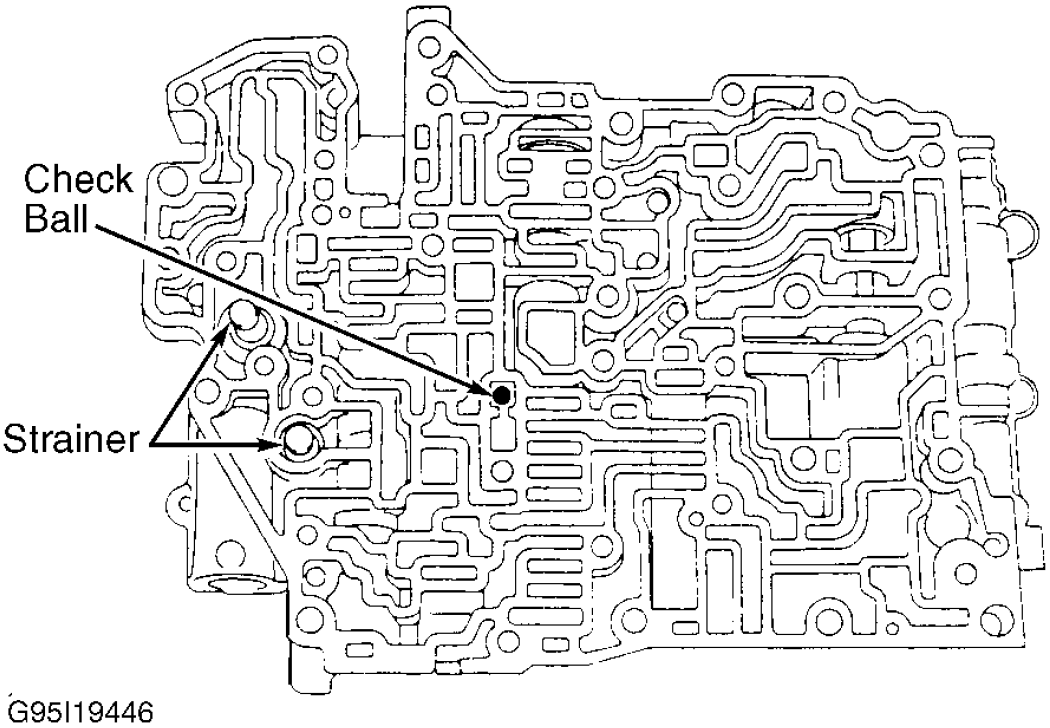

Fig. 46: Locating A-541E Lower Valve Body (Top) Check Balls
Courtesy of TOYOTA MOTOR SALES, U.S.A., INC.

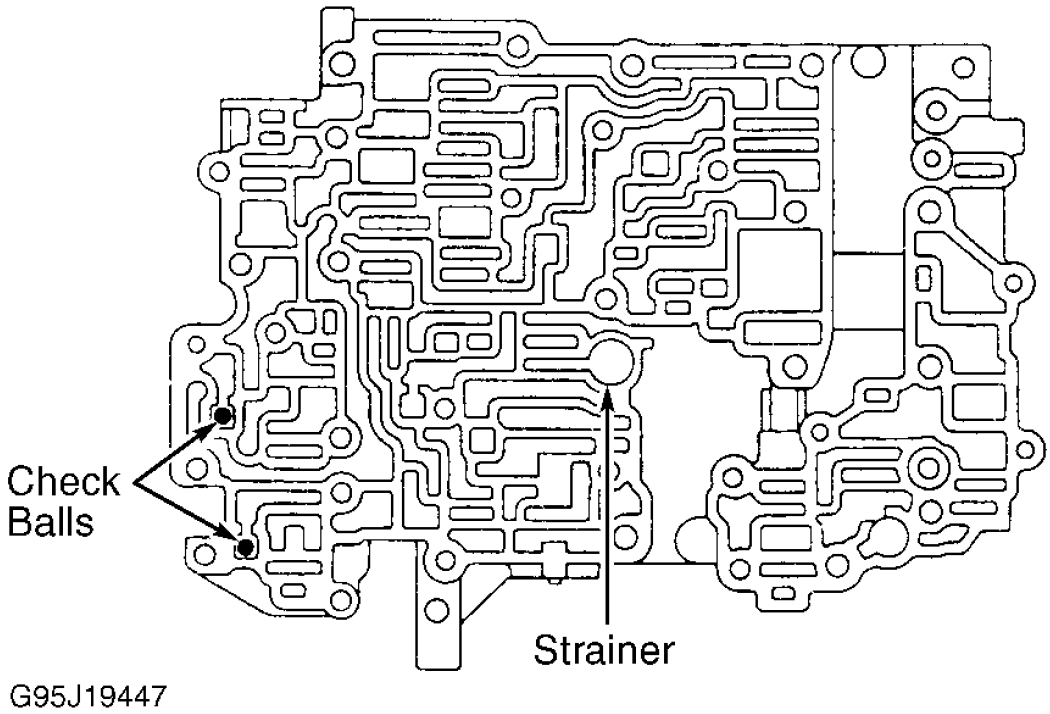

Fig. 47: Locating A-541E Lower Valve Body (Bottom) Check Balls
Courtesy of TOYOTA MOTOR SALES, U.S.A., INC.

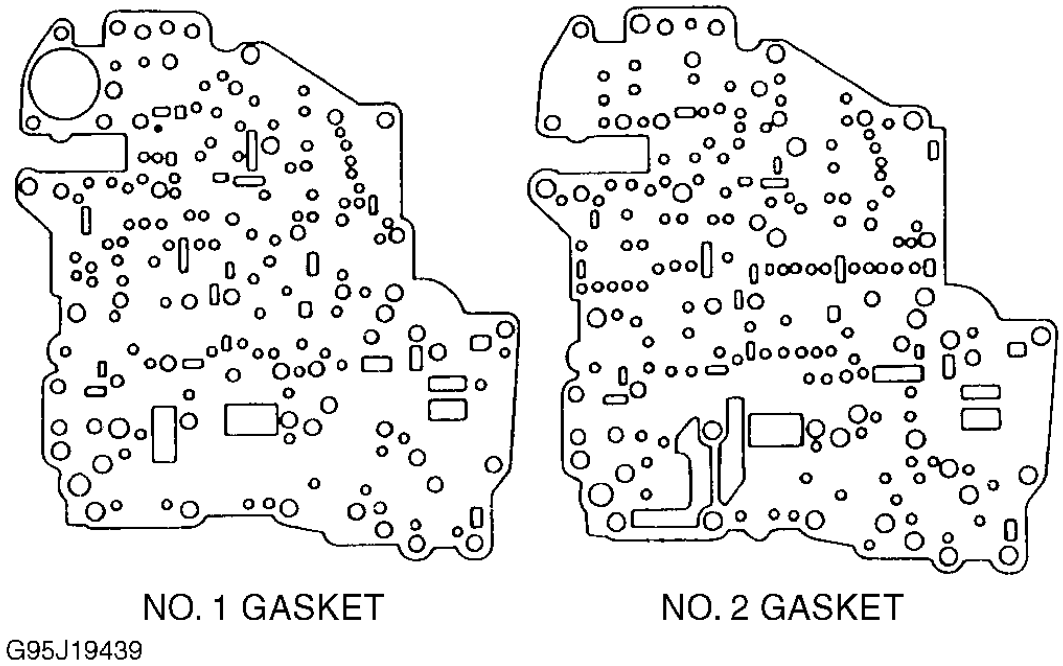

Fig. 48: Identifying A-541E Valve Body Gaskets
Courtesy of TOYOTA MOTOR SALES, U.S.A., INC.

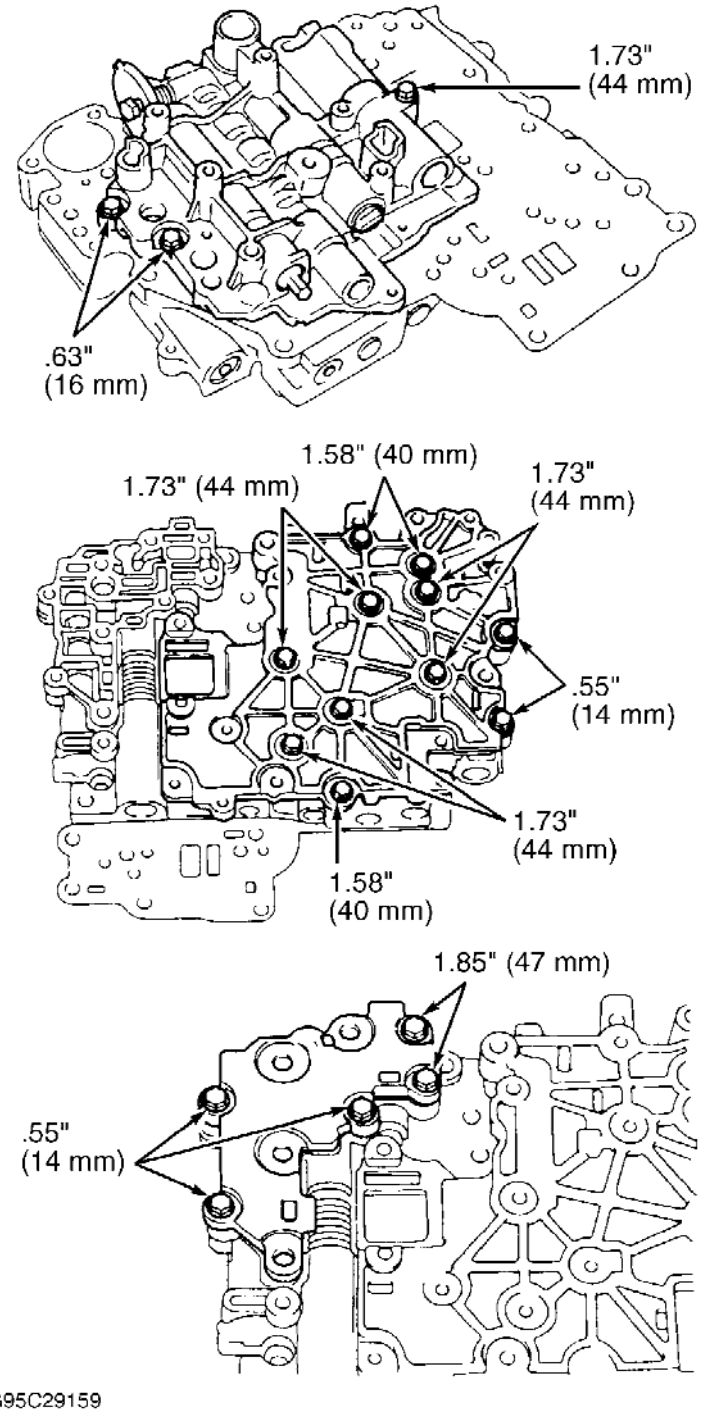

Fig. 49: Locating A-541E Valve Body Bolts
Courtesy of TOYOTA MOTOR SALES, U.S.A., INC.

OVERDRIVE UNIT DISASSEMBLY & REASSEMBLY

Disassembly (Overdrive Brake)

1. While pushing return spring, remove snap ring with a screwdriver. Remove piston return spring. Remove plates, discs and flange. Note number and location of components. See **Fig. 50** .
2. Remove piston from drum by applying compressed air to oil hole. See **Fig. 51** . Ensure piston does not tilt. Remove "O" rings from piston. Inspect disc, plate and flange. If discs are replaced, soak discs in ATF for 15 minutes.

Reassembly (Overdrive Brake)

1. Install "O" rings on piston. Coat "O" rings with ATF. Install piston in drum. Ensure "O" ring is not damaged. Install flange facing flat end upward.
2. Install discs and plates. Install cushion plate with rounded end upward. Install piston return spring assembly. Install snap ring into case. Ensure end gap of snap ring is not aligned with cutouts.

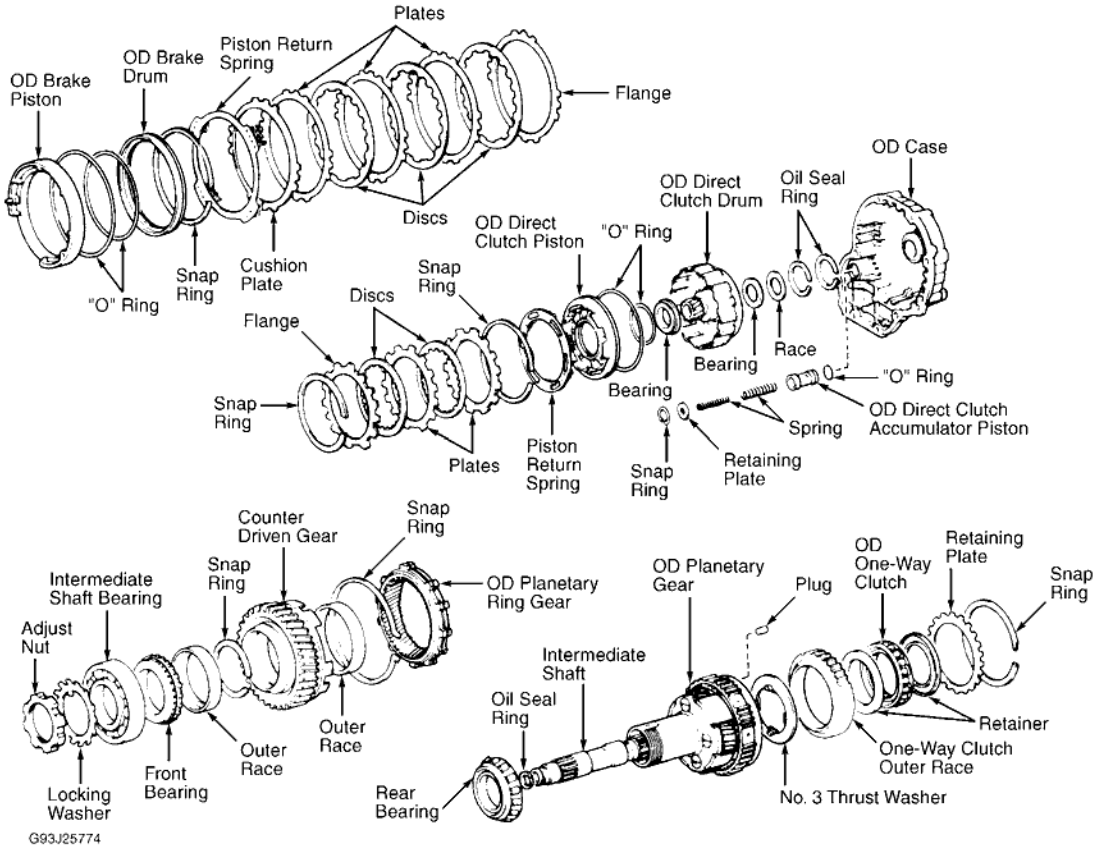

Fig. 50: Exploded View Of Overdrive Assembly
Courtesy of TOYOTA MOTOR SALES, U.S.A., INC.

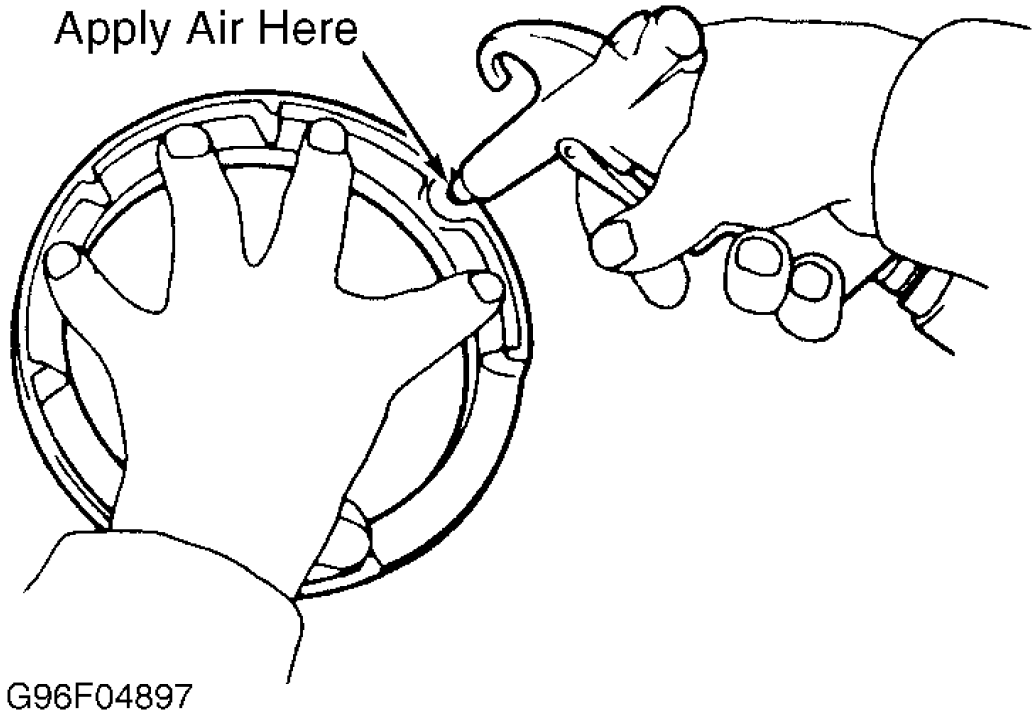

Fig. 51: Removing Overdrive Brake Piston
Courtesy of TOYOTA MOTOR SALES, U.S.A., INC.

Disassembly (Overdrive Direct Clutch)

1. Remove overdrive direct clutch from case. See **Fig. 50** . Remove bearing and race from clutch drum and case. Using a screwdriver, remove snap ring. Remove flanges, discs and plates. Note number and location of components. Compress piston return spring and remove snap ring. Remove piston return spring.
2. Install drum in case. Apply compressed air to pressure apply hole. Remove OD direct clutch drum from case. See **Fig. 52** . If piston does not completely come out, use needle-nose pliers to remove piston. Remove "O" rings from piston.

Inspection

Inspect check ball in piston for free movement by shaking piston. Ensure valve does not leak by applying low pressure compressed air. If discs are replaced, soak discs in ATF for 15 minutes. Measure inside diameter of 2 direct clutch bushings. Maximum inside diameter is .871" (22.13 mm). If inside diameter exceeds specification, replace direct clutch drum.

Reassembly (Overdrive Direct Clutch)

1. Coat NEW "O" ring with ATF. Install "O" ring on piston. Press piston in drum with cup side up. DO NOT damage "O" ring. Install return spring and set snap ring in place. See **Fig. 50** .
2. Set spring compressor block on spring retainer and compress springs. Using a screwdriver, install snap ring. Ensure end gap of ring is aligned with groove of clutch drum.
3. Install plates, discs and flange. Using a screwdriver, install snap ring. Ensure snap ring end gap is not aligned with groove of clutch drum. Coat bearing with petroleum jelly and install race facing downward toward clutch drum. Install overdrive clutch drum to case.
4. Measure piston stroke by applying and releasing 57-114 psi (4-8 kg/cm^2) of compressed air. Piston stroke should be .069-.098" (1.75-2.49 mm). See **Fig. 52** . Ensure piston moves freely. If piston does not move, disassemble and inspect.

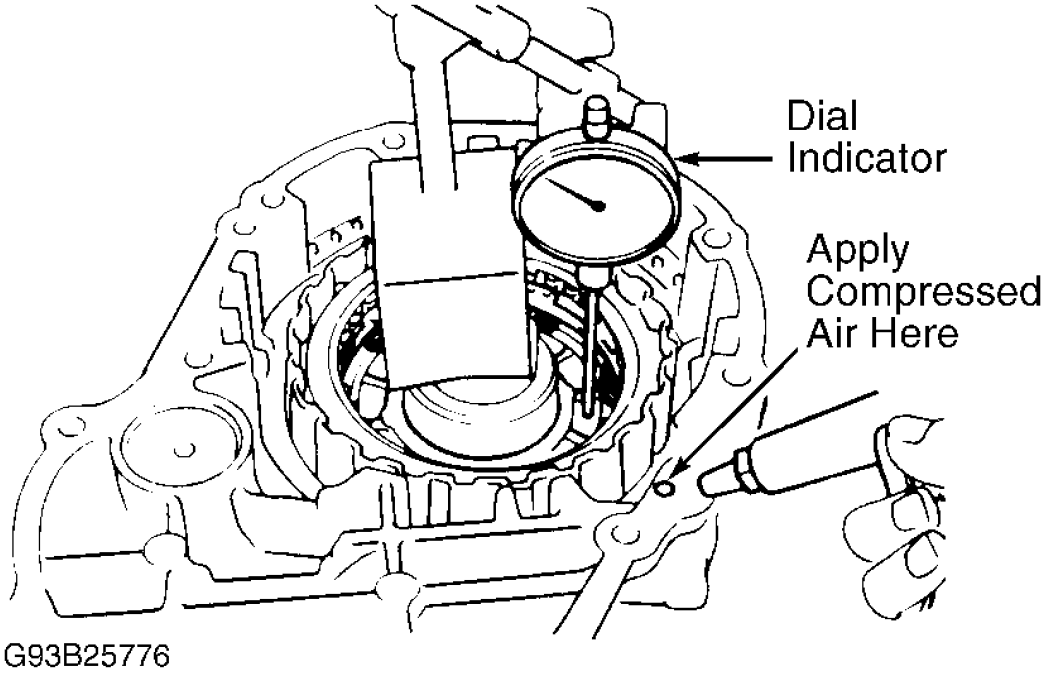

Fig. 52: Checking OD Direct Clutch Piston Stroke
Courtesy of TOYOTA MOTOR SALES, U.S.A., INC.

Disassembly (Overdrive Counter Drive Gear)

1. Install overdrive direct clutch into one-way clutch. Hold overdrive direct clutch and turn intermediate shaft. Shaft should turn freely clockwise and lock counterclockwise. See **Fig. 53** . Remove overdrive direct clutch.
2. Check counter drive gear preload. Hold overdrive planetary gear in a soft-jawed vise. DO NOT let counter drive gear touch the vise. Using a spring gauge, measure preload. See **Fig. 54** . Turn counter drive gear right and left several times before measuring preload. Starting preload should be 2.1-3.4 lbs. (9.2-

15.3 N).

3. Remove snap ring and retaining plate. Remove overdrive one-way clutch and outer race as an assembly. Remove one-way clutch from outer race, noting direction of one-way clutch.
4. Remove No. 3 planetary gear thrust washer. See **Fig. 50** . Using a magnet, carefully remove 4 plugs from planetary gear. Pry back lock washer with screwdriver. Hold shaft in soft-jawed vise. Loosen adjusting nut. Remove nut and washer.
5. Using a bearing puller and arbor press, remove intermediate shaft bearing. Using press, remove counter drive gear and front bearing together. Remove rear bearing using bearing puller and arbor press. Tag bearings to show location for reassembly.
6. To remove overdrive planetary ring gear from counter drive gear, pull up ring gear while compressing snap ring with needle-nose pliers. Remove snap ring from groove.
7. Remove ring gear from counter drive gear. Using a brass drift bar and hammer, drive outer races from counter drive gear. Remove snap ring from counter drive gear. Tag races to show location for reassembly.

Inspection

Measure planetary pinion gear thrust clearance. Standard clearance is .006-.022" (.16-.56 mm). Maximum clearance is .024" (.61 mm). If clearance is excessive, replace planetary gear assembly.

Reassembly (Overdrive Counter Drive Gear)

1. Install snap ring in counter drive gear. Install 2 outer races to both sides of counter drive gear. Press in outer races until races touch snap ring.
2. Install snap ring to ring gear. While pushing down on ring gear, squeeze snap ring end with needle-nose pliers. Install overdrive planetary ring gear into counter drive gear.
3. Install rear bearing on shaft. Press in bearing until side surface of inner race touches planetary carrier. Install counter drive gear on shaft. Mesh ring gear with planetary pinions. Place front bearing on shaft. Hold ring gear to prevent shaft from falling.
4. Press in bearing until there is slight play between bearings. Install intermediate shaft bearing. Press bearing until bearing slightly touches front bearing of counter drive gear.
5. Place NEW locking washer and adjusting nut on intermediate shaft. Adjust preload of counter drive gear. Holding shaft in a soft-jawed vise and using a tension gauge and lock nut wrench on adjusting nut, tighten adjusting nut. See **Fig. 54** .
6. Rotate counter drive gear right and left several times before measuring preload. Tighten adjusting nut until preload is 2.1-3.4 lbs. (9.2-15.3 N). Bend locking washer tab until even with adjusting nut groove.
7. Install 4 plugs into pinion shaft. Install No. 3 thrust washer with groove facing overdrive case. Install one-way clutch into outer race. Install retainers on both sides of one-way clutch. Install one-way clutch into overdrive planetary gear. Ensure one-way clutch is installed in correct direction. Install retaining plate and snap ring.
8. Hold overdrive direct clutch and turn intermediate shaft. Shaft should turn freely clockwise and lock counterclockwise. See **Fig. 53** . Remove overdrive direct clutch from one-way clutch.
9. While turning overdrive planetary gear clockwise, install gear on overdrive direct clutch. If overdrive planetary gear is properly installed, clearance between counter drive gear and overdrive case will be .94" (24.0 mm). See **Fig. 55** .

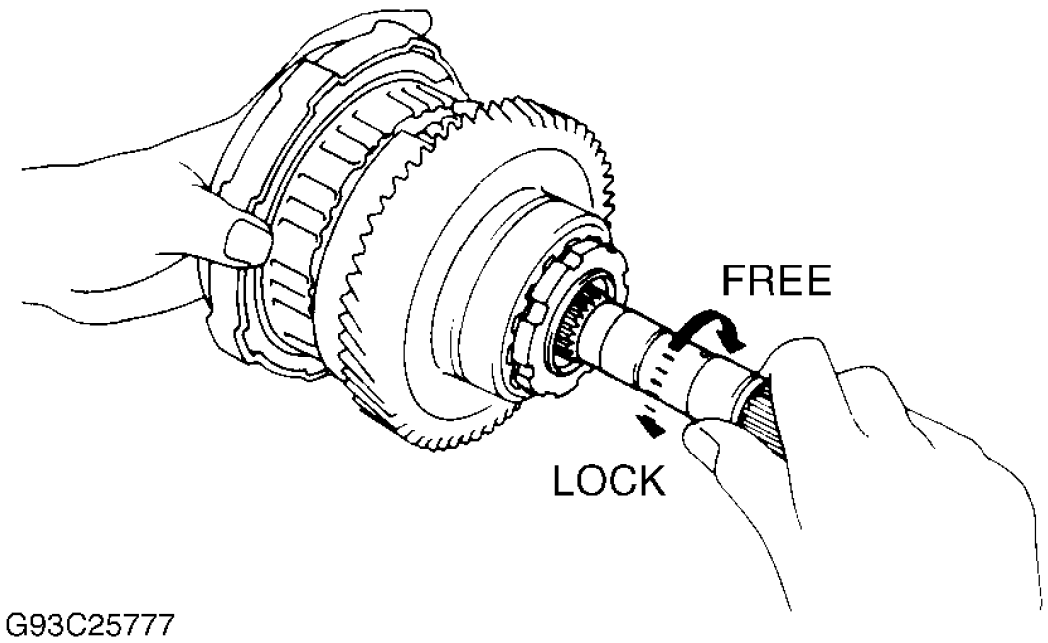

Fig. 53: Checking OD One-Way Clutch Operation
Courtesy of TOYOTA MOTOR SALES, U.S.A., INC.

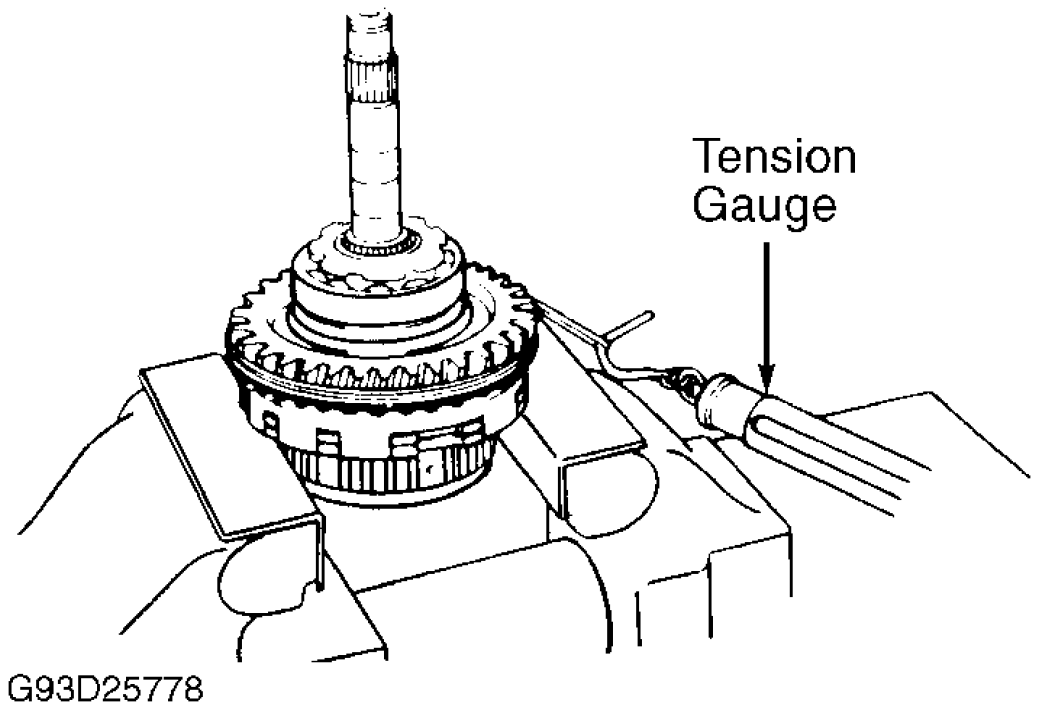

Fig. 54: Checking Counter Drive Gear Preload
Courtesy of TOYOTA MOTOR SALES, U.S.A., INC.

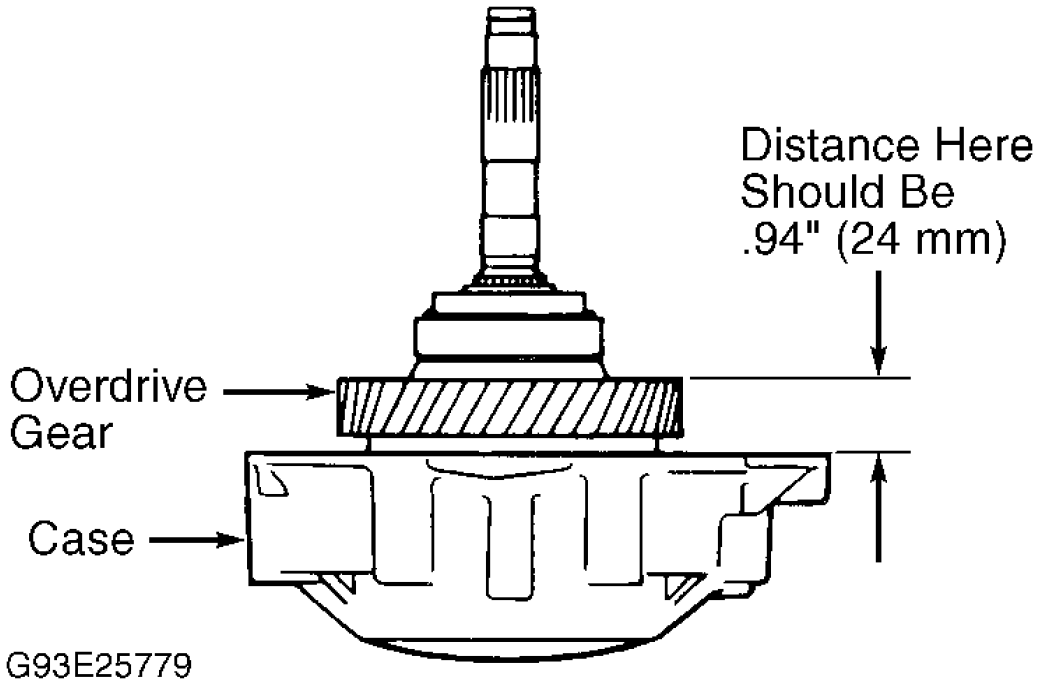

Fig. 55: Checking Distance Between Overdrive Gear & Case
Courtesy of TOYOTA MOTOR SALES, U.S.A., INC.

Disassembly (Overdrive Case)

Remove snap ring. Remove retaining plate and 2 springs. Remove OD direct clutch accumulator piston from overdrive case. Remove "O" ring from piston. Spread 2 oil seal rings apart and remove rings.

Reassembly (Overdrive Case)

Spread rings and install in grooves. After installing oil seal rings, check for smooth movement. Coat "O" ring with ATF. Install NEW "O" ring on accumulator piston. Install accumulator piston, springs, retaining plate and snap ring.

DIFFERENTIAL ASSEMBLY (A-540E) DISASSEMBLY & REASSEMBLY

Disassembly

1. Using appropriate puller, remove differential case side bearings. Place match marks on both differential case and ring gear. Remove 16 bolts. Tap ring gear with a plastic hammer to remove gear.
2. Place match marks on differential right and left case. Remove 16 Torx screws. Using a plastic hammer, tap out differential left case. Remove speedometer drive gear from differential right case.

3. Remove differential side gears, side thrust washers, differential spider, differential pinions and pinion washers from differential left case. See **Fig. 56** .
4. Using a hammer and screwdriver, remove oil seal. Remove oil baffle from left bearing retainer. Drive out outer race and adjusting shim from left bearing retainer with a hammer and brass drift. Remove right oil seal from retainer.

Reassembly

1. Install right oil seal to retainer. Drive in NEW oil seal until seal surface is flush with surface of retainer. Coat oil seal lip with grease.
2. Install original adjusting shim and bearing outer race to left bearing retainer. Shim should be .0945" (2.400 mm). Press outer race into left retainer. Install oil baffle and oil seal after adjusting differential side bearing preload. See **TRANSAXLE REASSEMBLY** .
3. Assemble differential case. Coat all sliding and rotating surfaces with ATF before assembly. Install thrust washer to side gear. Install pinions and thrust washers to spider. Install side gear and spider with pinions to differential left case. Using a dial indicator, measure side gear backlash while holding one pinion against carrier casing. See **Fig. 60** . Backlash should be .002-.008" (.05-.20 mm). Install side gear and spider with pinions to right side of differential case. Check pinion gear backlash.
4. Select side gear thrust washer which ensures backlash is within specification. Side gear thrust washers are available in thicknesses from .0315" (.80 mm) to .0551" (1.40 mm) in .004" (.10 mm) increments. Select washers of the same size for both sides. Install speedometer driven gear.
5. Align match marks on differential cases. Using plastic hammer, carefully tap differential right case. Using a Torx wrench, install and tighten 16 Torx screws to 46 ft. lbs. (63 N.m).
6. Clean differential case contact surface with cleaning solvent. Heat ring gear to about 212°F (100°C) in an oil bath. DO NOT heat ring above 230°F (110°C). Clean contact surface of ring gear with cleaning solvent. Quickly install ring gear on differential case. Tighten bolts to 91 ft. lbs. (124 N.m). Install right and left side bearing to differential case.

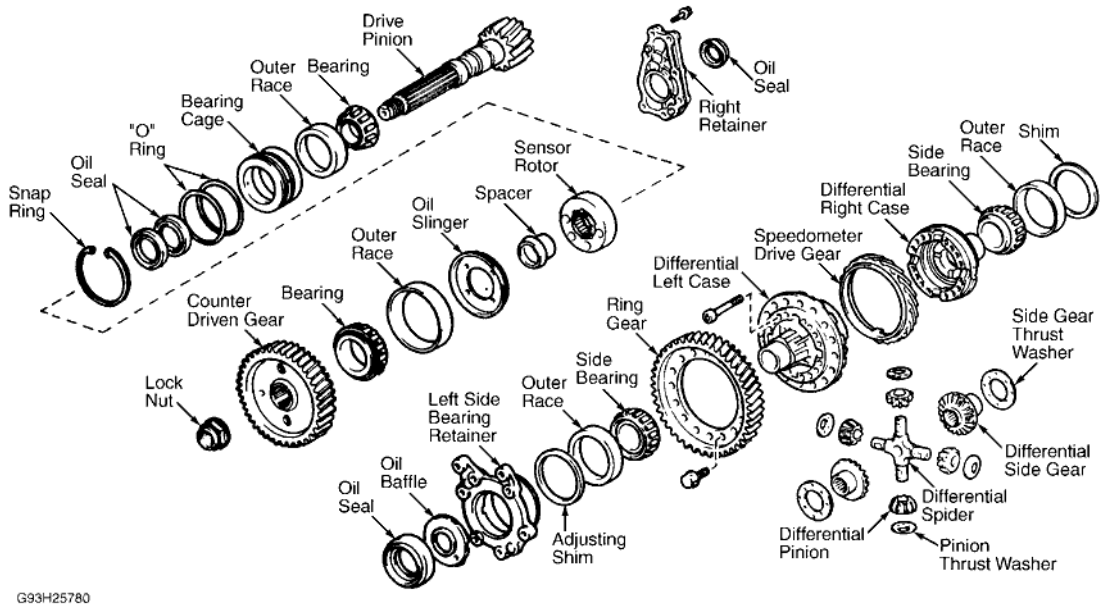

Fig. 56: Exploded View Of Differential Assembly (A-540E)
Courtesy of TOYOTA MOTOR SALES, U.S.A., INC.

DIFFERENTIAL ASSEMBLY (A-540H) DISASSEMBLY & REASSEMBLY

Disassembly

1. Remove right case bearing outer race. See **Fig. 57** . Use a dial indicator to measure differential end play. End play should be .0071-.0323" (.180-.820 mm). See **Fig. 58** . Remove ring gear mounting case sleeve. Remove 4 oil seal rings from ring gear mounting right case. Remove snap ring and speedometer drive gear.
2. Place match marks on ring gear mounting left case and right case. Remove bolts and left case. Place match marks on ring gear and left case. Place left case on A/T Tool Set (09350-32014). Using a plastic hammer, remove ring gear from left case.
3. Remove No. 2 thrust washer. Remove front differential left case from ring gear mounting right case. Using a Torx wrench, remove screws from left case. Separate left and right cases. DO NOT scratch contact surface of needle bearing.
4. Remove the following parts from front differential cases: 2 differential side gears and 2 side thrust washers, differential spider, 4 differential pinions and 4 pinion washers.
5. Remove No. 1 thrust washer. Check operation of clutch pistons. Plug one hole in right case with your hand. Apply compressed air into other hole and confirm pistons move. See **Fig. 59** .

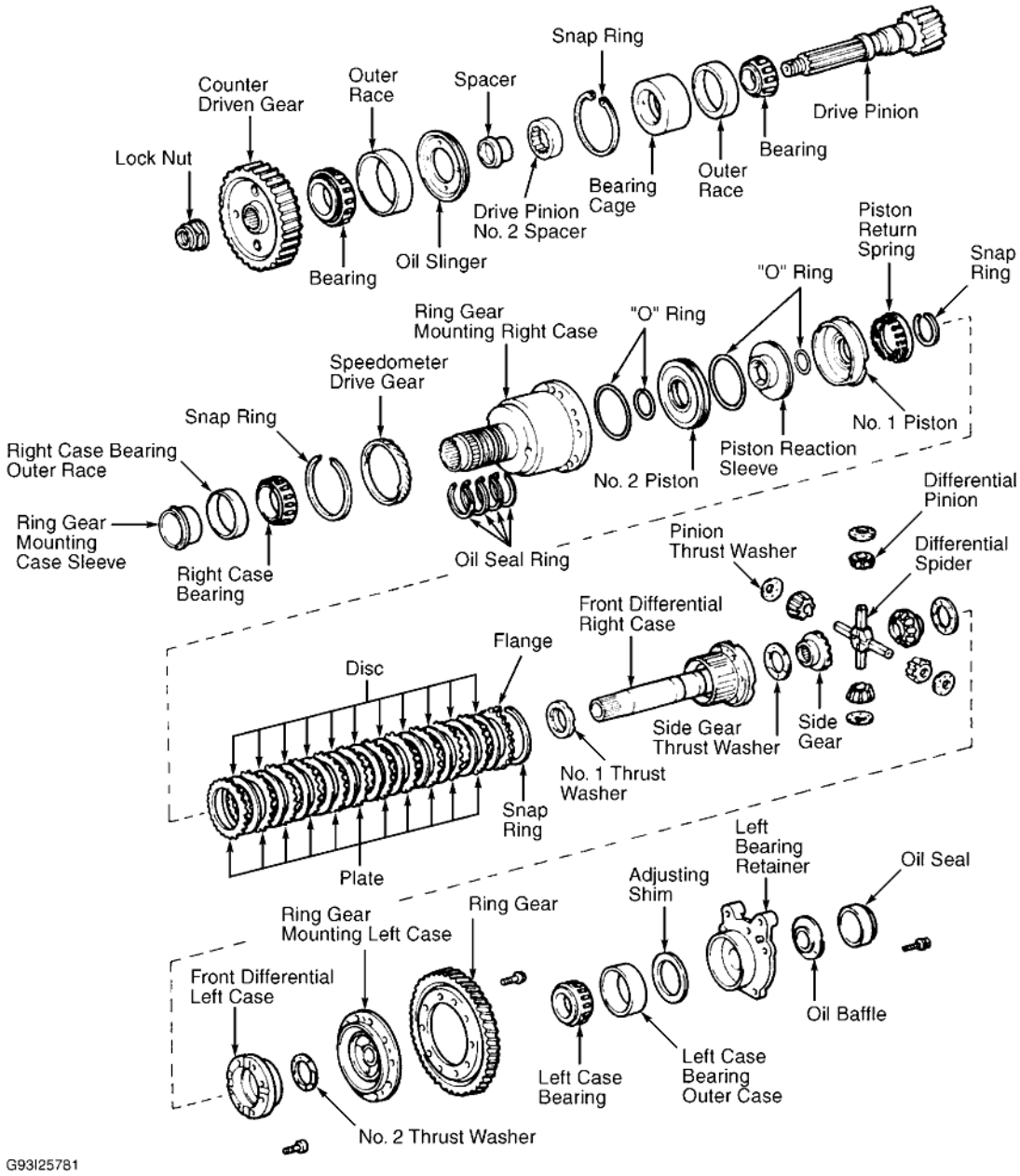

Fig. 57: Exploded View Of Differential Assembly (A-540H)
Courtesy of TOYOTA MOTOR SALES, U.S.A., INC.

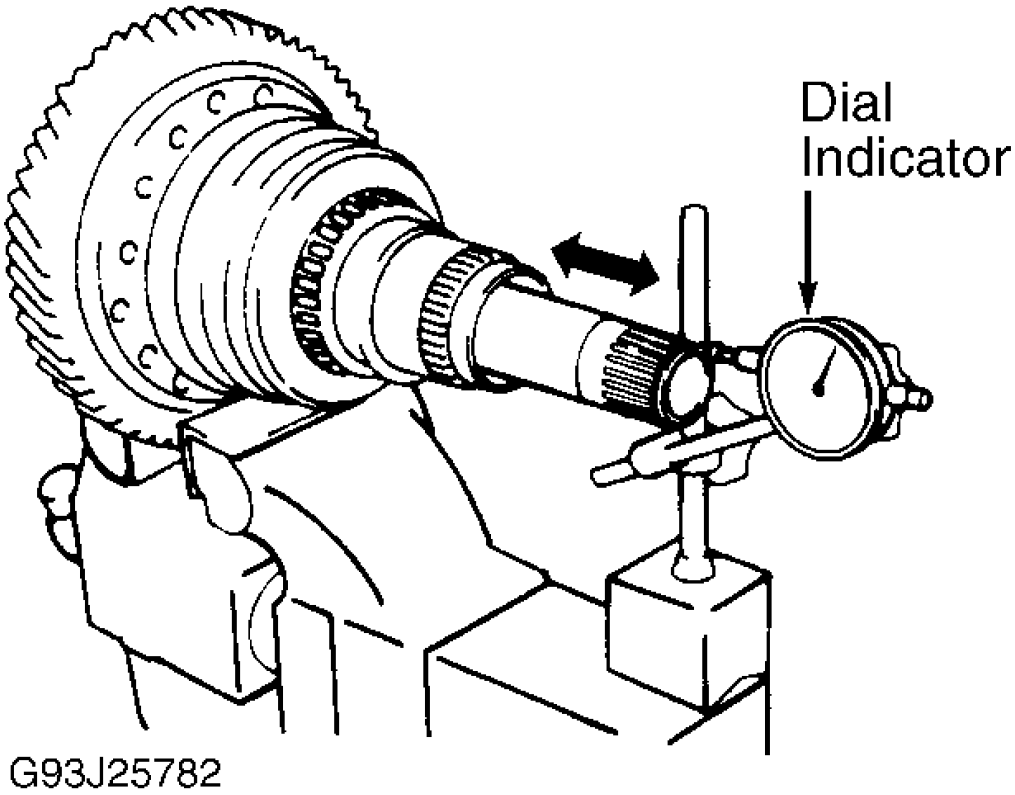

Fig. 58: Checking Differential End Play (A-540H)
Courtesy of TOYOTA MOTOR SALES, U.S.A., INC.

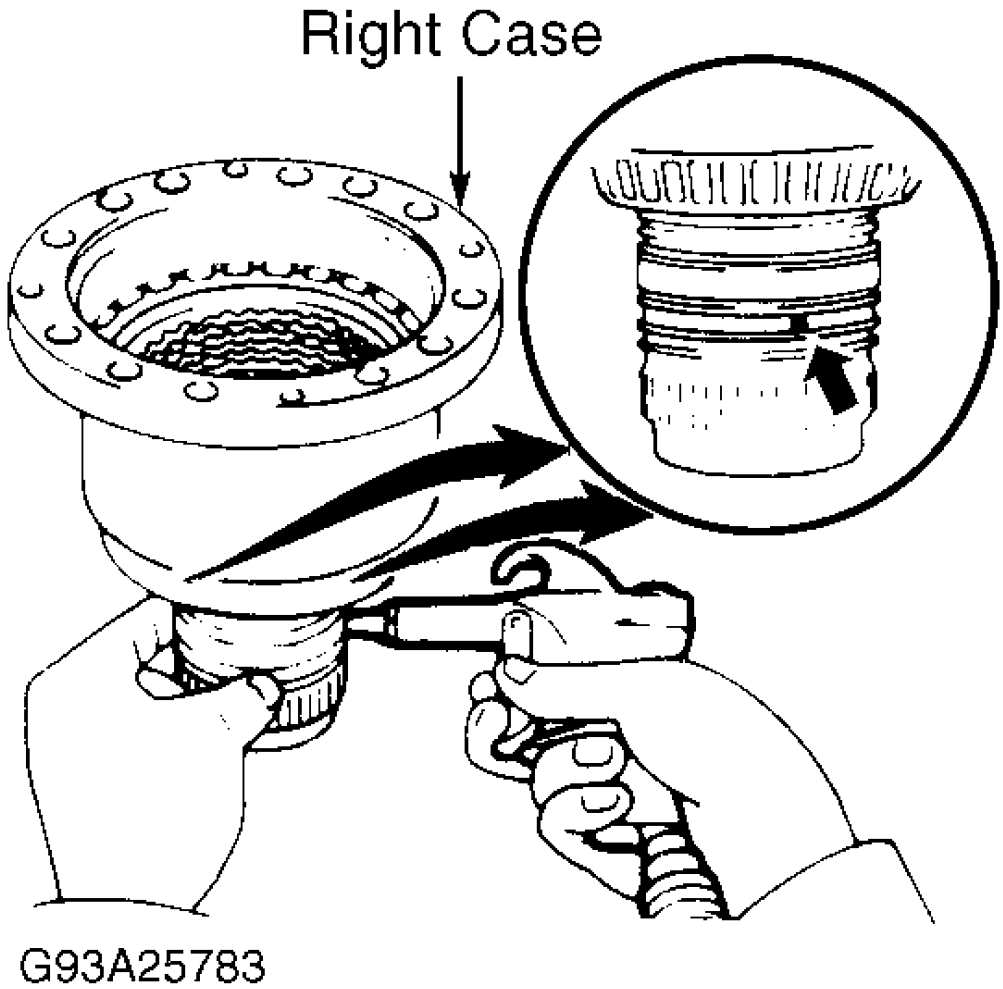

Fig. 59: Checking Operation Of Differential Clutch Pistons (A-540H)
Courtesy of TOYOTA MOTOR SALES, U.S.A., INC.

6. Remove hydraulic multi-plate clutch discs and plates. Remove snap ring. Remove flange, discs and plates. Note number and location of components. Using Spring Compressor (09350-32014), compress return spring. Remove snap ring. Apply compressed air to right case hole. Remove No. 1 piston. Remove "O" ring from No. 1 piston. Using small screwdriver, remove reaction sleeve and No. 2 piston. Remove 3 "O" rings from reaction sleeve and No. 2 piston.
7. Using Bearing Remover and Attachment (09950-00020, 09950-00030), remove ring gear mounting left case bearing. Using A/T Tool Set (09350-32014) and arbor press, install ring gear mounting left case bearing.
8. Using a chisel and hammer, cut out ring gear mounting right case bearing cage. DO NOT damage right

case. Using A/T Tool Set (09350-32014) and arbor press, remove bearing inner race. Using Bearing Replacer (09316-60010) and arbor press, install NEW ring gear mounting right case bearing.

9. Use hammer and screwdriver to remove oil seal from ring gear mounting left case. Remove oil baffle from left bearing retainer. Use hammer and brass bar to drive out outer race and adjusting shim from left bearing retainer. Place adjusting shim into left bearing retainer. Use either original shim or shim with thickness of .0945" (2.400 mm). Use A/T Tool Set (09350-32014) and arbor press to install outer race and shim. Install oil baffle and oil seal after adjusting differential side bearing preload. See **TRANSAXLE REASSEMBLY** .

Reassembly

1. Coat 4 "O" rings with ATF. Install "O" rings on reaction sleeve and pistons. Install No. 1 piston, No. 2 piston and reaction sleeve to ring gear mounting right case.
2. Place return spring on piston. Install A/T Tool Set (09350-32014) on piston return spring retainer. Compress spring with arbor press. Install snap ring.
3. Install plates and discs, starting with plate, alternating with disc and ending with disc. Install flange with flat end facing downward. Install snap ring. Check operation of clutch pistons. Plug one hole with your hand. Apply compressed air into other hole. Ensure pistons move. Install No. 1 thrust washer.
4. Install following parts into front differential left case: side gear thrust washer, side gear, 4 differential pinion gears, 4 pinion gear thrust washers and differential spider. Use a dial indicator to measure backlash of one pinion gear while holding side gear toward case. See **Fig. 60** . Backlash should be .002-.008" (.05-.20 mm).
5. If backlash exceeds specification, install thrust washers of different thickness. DO NOT overtighten the vise. See **SIDE GEAR THRUST WASHER SPECIFICATIONS** table. Perform same procedure described in step 4 for front differential right case. See **Fig. 60** .

SIDE GEAR THRUST WASHER SPECIFICATIONS

ID Mark	Thickness - In. (mm)
A	.0394 (1.000)
B	.0413 (1.050)
C	.0433 (1.100)
D	.0453 (1.150)
E	.0472 (1.200)
F	.0492 (1.250)
G	.0512 (1.300)

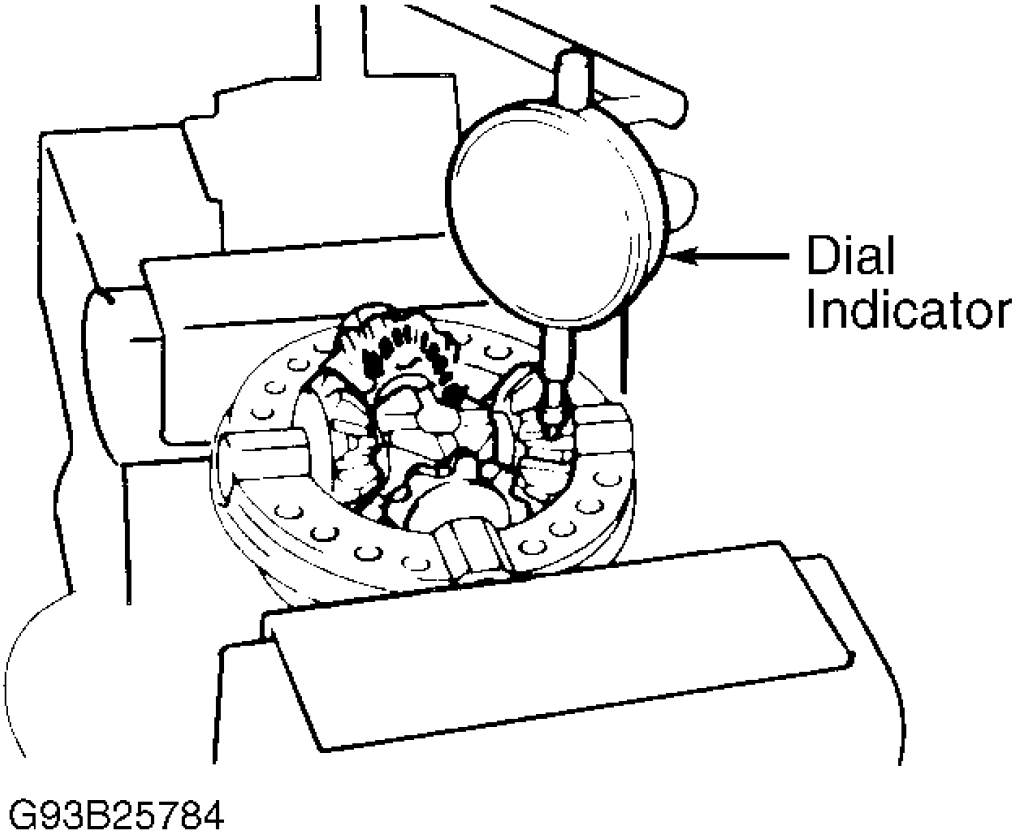

Fig. 60: Measuring Front Differential Side Gear Backlash
Courtesy of TOYOTA MOTOR SALES, U.S.A., INC.

6. Install front differential left case to right case. Align match marks on left and right cases. Tighten Torx screws to 24 ft. lbs. (33 N.m). Install front differential case to ring gear right case. Align flukes of discs in hydraulic multi-plate clutch. Install No. 2 washer.
7. Clean ring gear left case contact surface. Heat ring gear to about 212°F (100°C) in an oil bath. DO NOT heat ring gear above 230°F (110°C). Clean contact surface of ring gear with cleaning solvent. Quickly install ring gear on differential case. Align match marks on ring gear left case and ring gear. Install ring gear and left case on right case. Install 12 bolts. Align match marks on ring gear left and right cases. Tighten bolts to 91 ft. lbs. (124 N.m).
8. Ensure front differential turns smoothly. Place speedometer drive gear on ring gear case. Install snap ring. Install oil seal rings to ring gear right case. Install ring gear case sleeve. Install right case bearing outer race.

DIFFERENTIAL ASSEMBLY (A-541E) DISASSEMBLY & REASSEMBLY

Disassembly

1. Using appropriate puller, remove differential case side bearings. Remove speedometer drive gear. Place reference marks on differential case and ring gear. Remove ring gear bolts. Using soft-face hammer, remove ring gear.
2. Mount differential in vise. Using dial indicator, measure pinion gear backlash. See **Fig. 61** . Backlash should be .002-.008" (.05-.20 mm). From ring gear side of case, drive out pinion shaft roll pin. Remove pinion shaft. Remove pinion gears, side gears and all thrust washers. See **Fig. 62** . Examine all components for wear and replace as needed.

Reassembly

1. Match side gears and pinion gears with corresponding thrust washers. Install gears in differential case. Install pinion shaft. Check pinion gear backlash.
2. If backlash is not within specification, replace side gear thrust washers with matched set. Washers are available in 3 thicknesses: .063" (1.60 mm), .067" (1.70 mm) and .071" (1.80 mm). Recheck backlash after washers have been replaced.
3. Drive in pinion shaft roll pin. Ensure ring gear mounting surface is clean and free of burrs or scratches. Heat ring gear in oil bath to 212°F (100°C). DO NOT exceed temperature. Install ring gear, aligning reference marks made during disassembly. Tighten bolts to specification. See **TORQUE SPECIFICATIONS** . Install speedometer drive gear. Press side bearing onto differential case. Lubricate all moving parts with ATF.

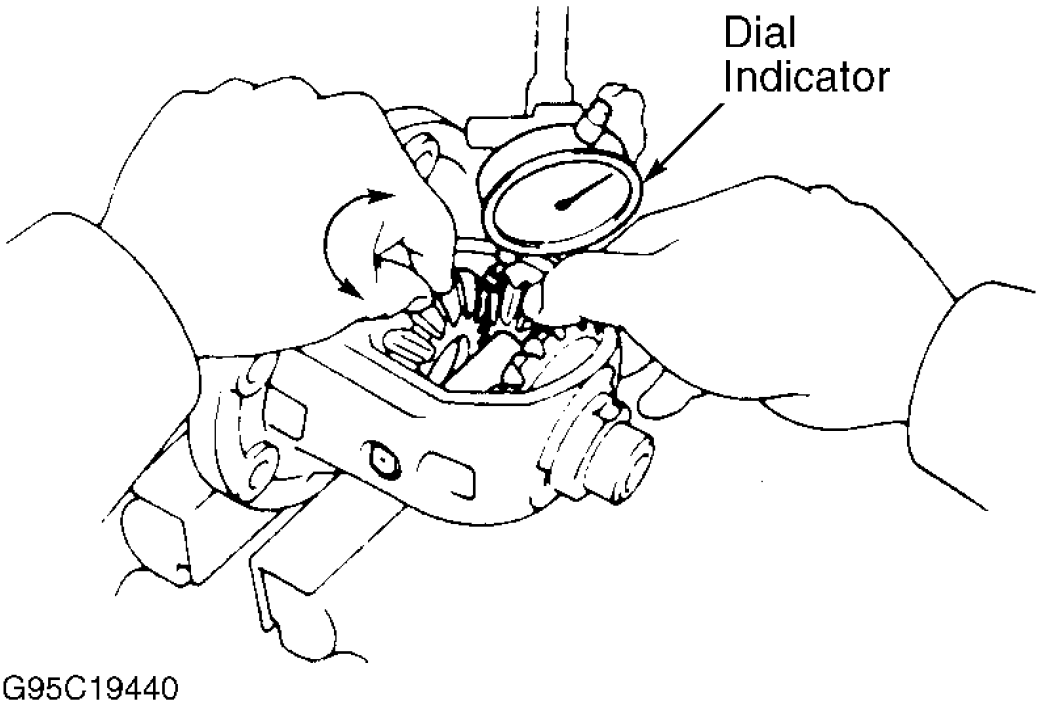

Fig. 61: Measuring Differential Pinion Bearing Backlash (A-541E)
Courtesy of TOYOTA MOTOR SALES, U.S.A., INC.

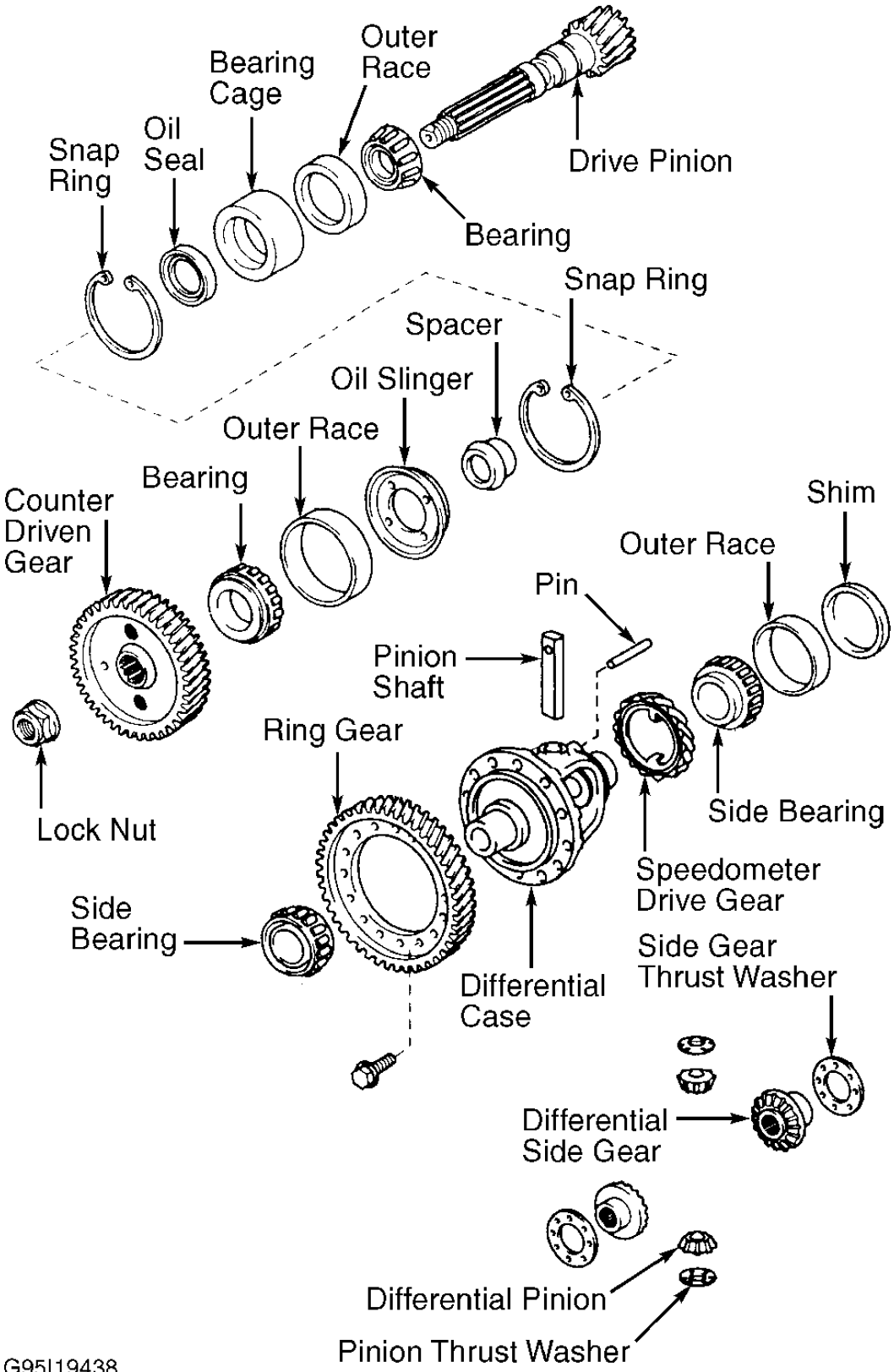
Outer Race
Bearing Cage
Oil Seal
Snap Ring
Drive Pinion
Bearing
Snap Ring
Spacer
Oil Slinger
Outer Race
Bearing
Counter Driven Gear
Shim
Outer Race
Pin
Pinion Shaft
Ring Gear
Lock Nut
Side Bearing
Speedometer Drive Gear
Side Bearing
Side Gear Thrust Washer
Differential Case
Differential Side Gear
Differential Pinion
Pinion Thrust Washer
G95I19438

Fig. 62: Exploded View Of Differential Assembly (A-541E)
Courtesy of TOYOTA MOTOR SALES, U.S.A., INC.

TRANSAXLE REASSEMBLY

NOTE: **Coat all oil seal rings, clutch discs, clutch plates, rotating parts, and sliding surfaces with ATF prior to reassembly. All gaskets and rubber "O" rings should be replaced. Ensure ends of snap rings are not aligned with cut-outs and are installed correctly in groove. If a worn bushing is to be replaced, replacement must be made with the subassembly containing that bushing. Check thrust bearings and races for wear or damage. Use petroleum jelly to hold parts in place. Replace parts as necessary. Soak clutch plates in ATF for 15 minutes prior to installation. For clutch disc and plate quantity, see CLUTCH DISC & PLATE QUANTITY table.**

NOTE: **For thrust bearing and race location and identification, see Fig. 73 and Fig. 74 .**

Reassembly (Differential & Drive Pinion)

1. Install NEW counter driven gear bearing (if necessary). Press in shaft bearing outer race into cage. Press bearing onto drive pinion shaft. Install drive pinion into transaxle case. See **Fig. 63** and **Fig. 64** . Place bearing cage onto drive pinion shaft. DO NOT damage oil seals with pinion shaft. Using brass drift and hammer, lightly tap bearing cage into transaxle case until snap ring groove in bore is visible. Install snap ring into bore.
2. On A-540E transaxle, install sensor rotor. On all transaxles, install oil slinger and NEW spacer (crush sleeve). Install spacer with small end downward. Press outer race into case. Place transaxle case with converter side facing down. Support drive pinion shaft with brass bar. See **Fig. 65** . Using press, install driven gear until bearing almost touches counter gear.
3. Install NEW lock nut. Secure gear from turning. Tighten nut to 207 ft. lbs. (280 N.m). Rotate gear both directions while tightening nut. Using a INCH-lb. torque wrench, measure starting preload of drive pinion.
4. Starting preload with new bearing should be 8.7-13.9 INCH lbs. (1.0-1.6 N.m). With used bearing, preload should be 4.3-6.9 INCH lbs. (.5-.8 N.m). If preload exceeds specification, replace bearing spacer (crush sleeve). DO NOT loosen nut to adjust starting preload.
5. If starting preload is less than specification, retighten shaft nut 115 INCH lbs. (13 N.m) at a time until specified preload is reached. Maximum shaft nut torque is 260 ft. lbs. (353 N.m). If maximum torque is exceeded while tightening shaft nut, replace bearing spacer. Repeat preload procedure. DO NOT loosen nut to reduce preload. Stake lock nut.
6. Install apply gasket(s) in transaxle case. On A-540E and A-541E transaxles, place outer race and selected adjusting shim on right side bearing. On all transaxles, place differential case in transaxle case. On A-540E and A-541E transaxles, ensure shim is properly installed. On A-540H transaxle, ensure ring gear mount case sleeve and outer race are properly installed.
7. On all transaxles, ensure bearing contact surfaces of differential (carrier) cover and transaxle case are oil free. Apply appropriate sealer to case and carrier cover. Install cover. Tighten bolts to specification. See **TORQUE SPECIFICATIONS** .

8. Install left bearing retainer by tapping with soft-faced hammer while keeping carrier centered with retainer. Tighten bolts to 14 ft. lbs. (19 N.m). Seat bearings by turning differential assembly several times.
9. Using a INCH-lb. torque wrench, measure total preload. See **Fig. 17** . Drive pinion starting preload with new bearings should be 2.2-3.8 INCH lbs. (.2-.4 N.m) greater than drive pinion shaft preload previously measured in step 4 .
10. If used bearings are used, preload should be 1.2-1.9 INCH lbs. (.1-.2 N.m) greater than drive pinion shaft preload previously measured. If preload exceeds specifications, replace adjusting shim in left bearing retainer. Remove left bearing retainer. Remove bearing race from retainer. Select shim from **DIFFERENTIAL SIDE BEARING ADJUSTING SHIM SELECTION** table.

DIFFERENTIAL SIDE BEARING ADJUSTING SHIM SELECTION

ID Mark	Thickness - In. (mm)
0	.0787 (2.000)
1	.0807 (2.050)
2	.0827 (2.100)
3	.0846 (2.150)
4	.0866 (2.200)
5	.0886 (2.250)
6	.0906 (2.300)
7	.0925 (2.350)
8	.0945 (2.400)
9	.0965 (2.450)
A	.0984 (2.500)
B	.1004 (2.550)
C	.1024 (2.600)
D	.1043 (2.650)
E	.1063 (2.700)
F	.1083 (2.750)
G	.1102 (2.800)
H	.1122 (2.850)

11. Install selected shim in retainer. Install bearing race. Install left bearing retainer by tapping with soft-faced hammer while keeping carrier centered with retainer. Tighten bolts to specification. See **TORQUE SPECIFICATIONS** . Recheck total starting preload.
12. If starting preload is within specification, remove left bearing retainer. Apply appropriate sealant to retainer mounting surface. Apply thread sealer to bolts. Install retainer.
13. Place oil baffle on left bearing retainer. Press in oil seal until flush with surface of retainer. Apply sealant to right retainer. Coat bolt threads with sealer. Tighten bolts to specification. See **TORQUE SPECIFICATIONS** . Install drive pinion cap to converter side of transaxle case.

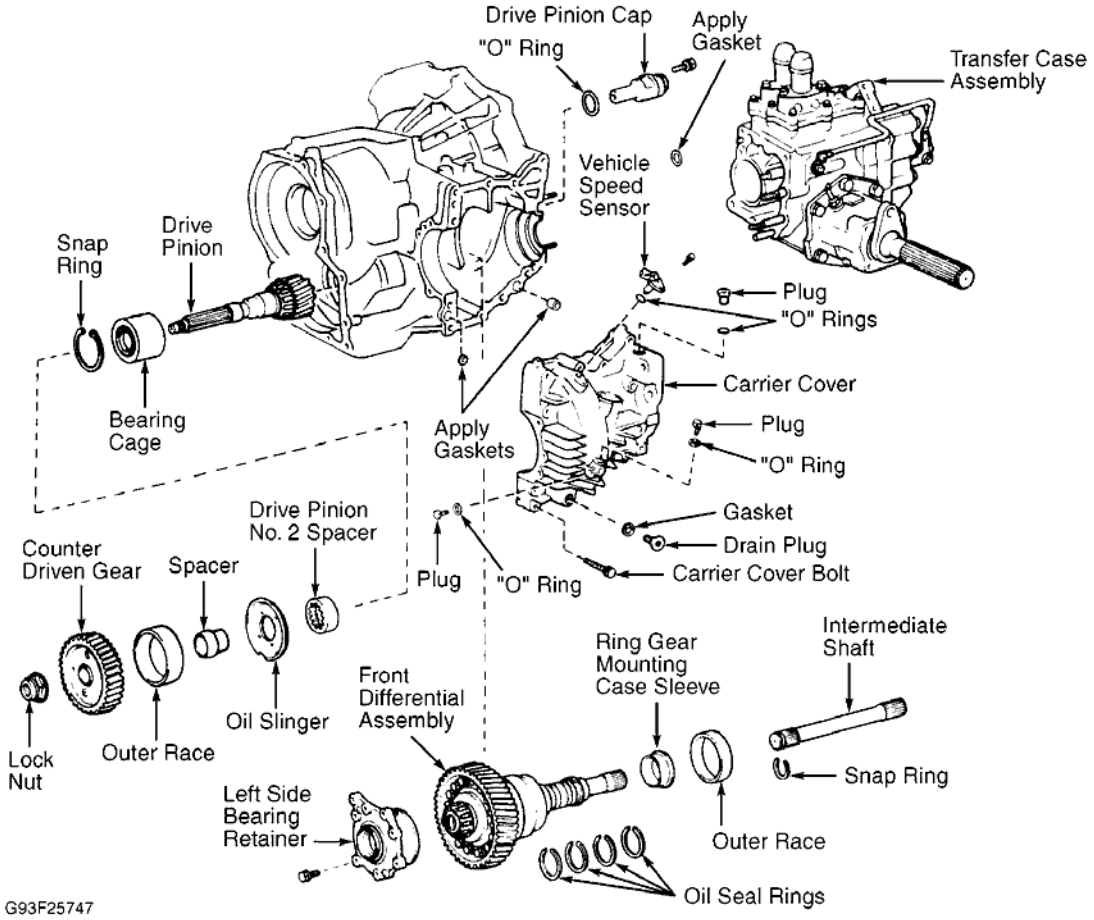

Fig. 63: Exploded View Of Final Drive Components (A-540H)
Courtesy of TOYOTA MOTOR SALES, U.S.A., INC.

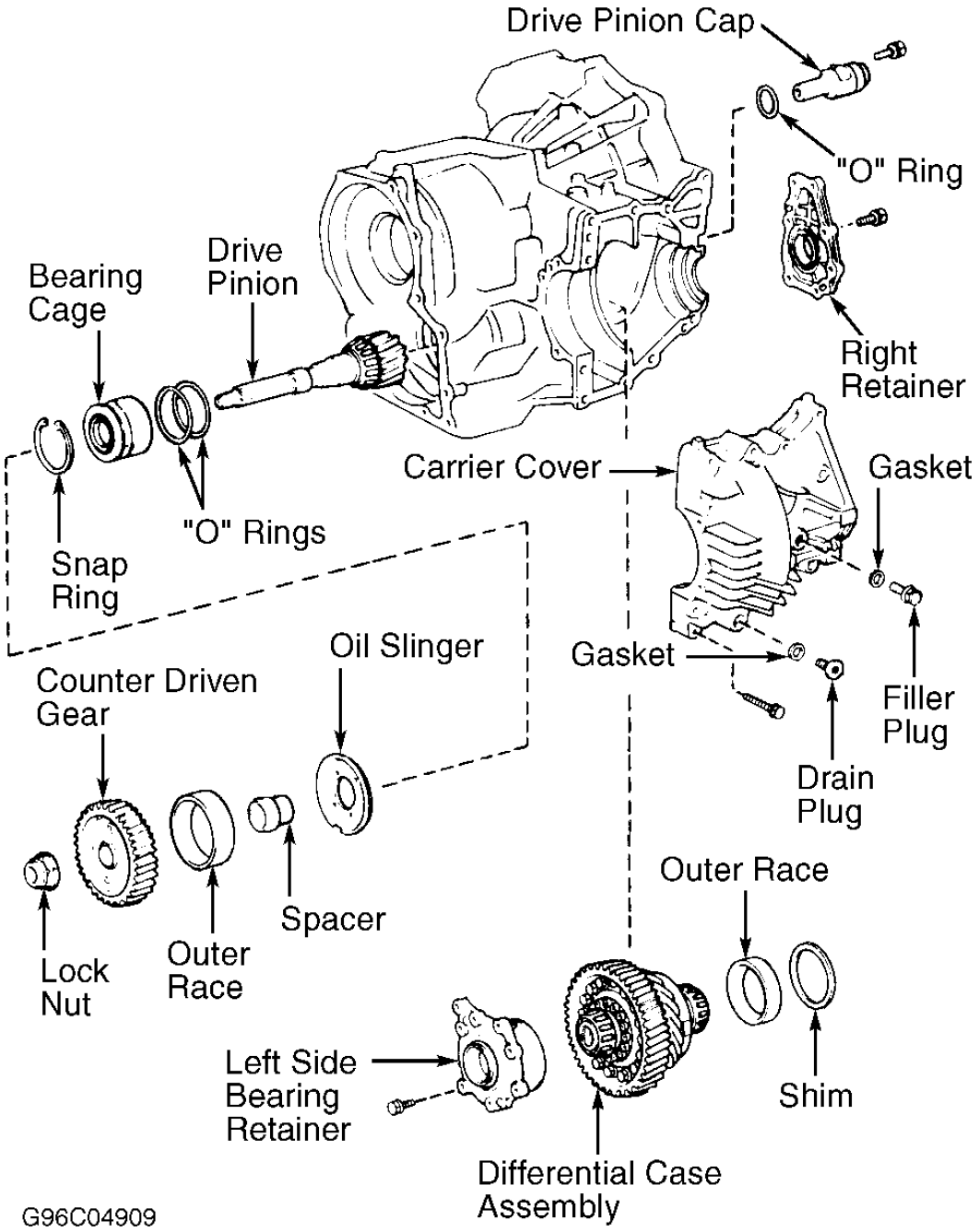

Fig. 64: Exploded View Of Final Drive Components (A-540E & A-541E)
Courtesy of TOYOTA MOTOR SALES, U.S.A., INC.

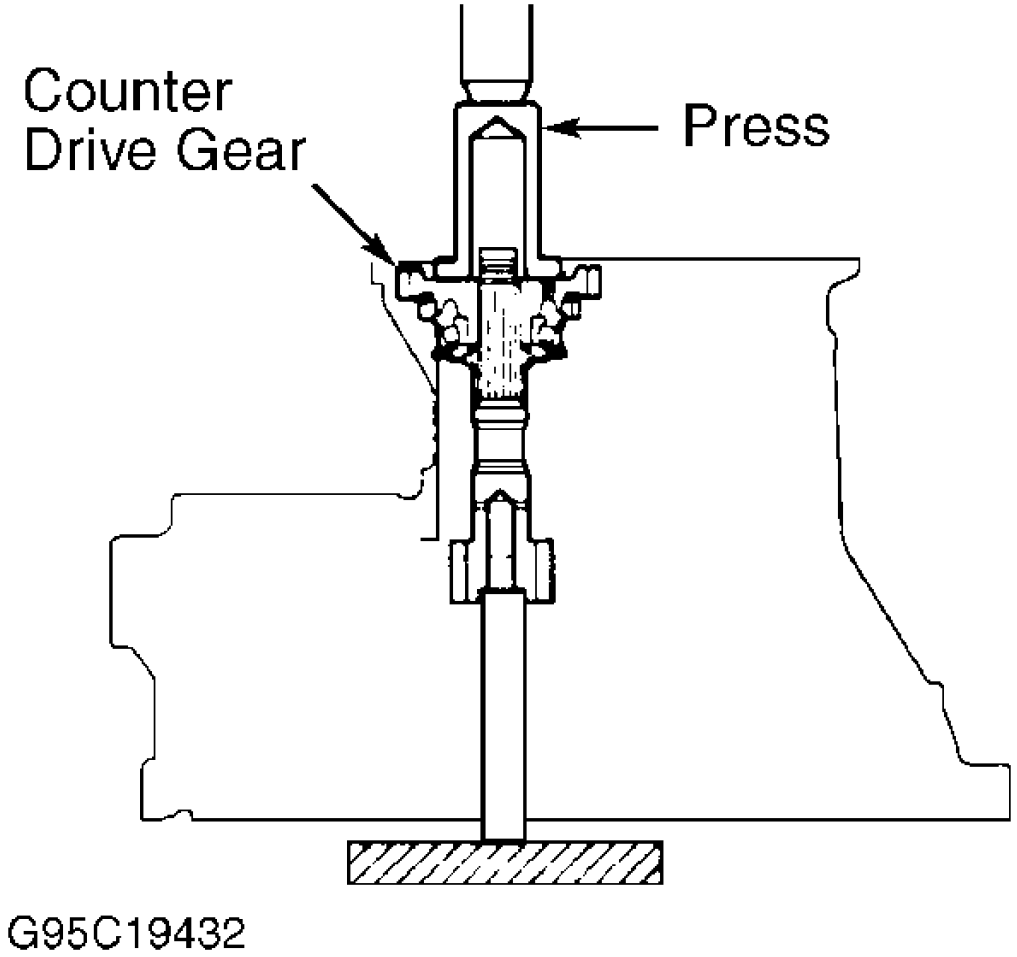

Fig. 65: Installing Driven Pinion
Courtesy of TOYOTA MOTOR SALES, U.S.A., INC.

Reassembly (Transaxle)

1. Check operation of parking lock pawl. Ensure counter driven gear is locked when manual valve lever is in "P" range. Install "O" rings on 1st and reverse brake piston. Install 1st and reverse brake piston in case. Push piston into bore of case, facing spring seat upward.
2. Install piston return spring. Using appropriate spring compressor, compress return spring. See **Fig. 16** . Install snap ring. Ensure snap ring is fully seated and centered by 3 lugs on spring retainer. Ensure snap ring end gap is not aligned with spring retainer claw. Install center snap ring.
3. Install overdrive brake and overdrive clutch apply gaskets over appropriate case opening (ports). Install overdrive brake drum to case. Install NEW case gasket. Align each bolt hole in gasket case. Install

overdrive assembly over gasket to transaxle case. Coat threads of 23 mm bolts with sealer. See **Fig. 66** . Tighten bolts to specification. See **TORQUE SPECIFICATIONS** .

4. Check intermediate shaft end play (axial). See **Fig. 67** . End play should be .019-.059" (.47-1.50 mm). Ensure shaft turns smoothly. If end play is not within specification, check installation of intermediate shaft.

NOTE: For thrust bearing and race location and identification, see Fig. 73 and Fig. 74 .

5. Install rear planetary ring gear. Place bearing on ring gear. Coat thrust washer with petroleum jelly and install on rear planetary gear. Install rear planetary gear. See **Fig. 28** .
6. Install 1st and reverse brake discs, plates and flange. See **Fig. 14** . Start with plate, alternating with disc, and ending with disc. Install outer flange with flat side facing toward piston side. Install snap ring. Ensure snap ring end-gap is not aligned with cutouts.
7. Check operation of 1st and reverse brake. Apply compressed air at oil passage of transaxle case to confirm piston movement. See **Fig. 15** . Check pack clearance of 1st and reverse brake. Clearance for A-540E is .33-.081" (.85-2.05 mm). Clearance for A-540H is .041-.085" (1.04-2.16 mm). Clearance for A-541E is .076-.106" (1.92-2.86 mm). See **Fig. 68** .
8. Install No. 2 one-way clutch in case. Install one-way clutch while turning planetary gear clockwise with snap ring expander. Check operation of No. 2 one-way clutch by turning planetary gear. Gear should turn freely clockwise and lock counterclockwise. See **Fig. 69** . Install snap ring. Ensure end gap is not aligned with cutouts.
9. Install thrust washer on rear planetary gear. Install 2nd coast brake band guide with correct bolt. Place thrust washer on No. 1 one-way clutch. Install No. 1 one-way clutch into rear planetary gear.
10. Install 2nd brake flange with flat end facing up. Install 2nd brake discs and plates, starting with disc and ending with plate. Place piston return spring in case. Place 2nd brake drum in case. Ensure groove of drum is aligned with bolt. While compressing piston return springs over drum with hammer handles, install snap ring in groove. Ensure snap ring end gap is not aligned with cutouts.
11. Install NEW 2nd brake gasket until contact is made with 2nd brake drum. See **Fig. 14** . Check operation of 2nd brake by applying compressed air into oil passage. Make sure the piston moves freely. See **Fig. 13** .
12. Install thrust washer on sun gear input drum (shell). Install sun gear by turning clockwise and installing in No. 1 one-way clutch. Install oil seal ring to intermediate shaft. Install front planetary gear with bearing on both sides of gear on sun gear. Install front planetary ring gear onto sun gear.
13. Install 2nd coast brake band into case. Install pin through oil pump mounting bolt hole. Install thrust bearings on both sides of forward clutch. Install thrust washer with oil groove facing upward onto direct clutch drum.
14. Mesh hub of forward clutch with flukes of direct clutch discs. Ensure bearing and thrust washer do not move out of place. Install direct and forward clutch into case. Hold direct clutch toward forward clutch to prevent thrust washer from moving out of place. Check distance between direct clutch drum and sun gear input drum. See **Fig. 70** . Distance should be .12" (3 mm).

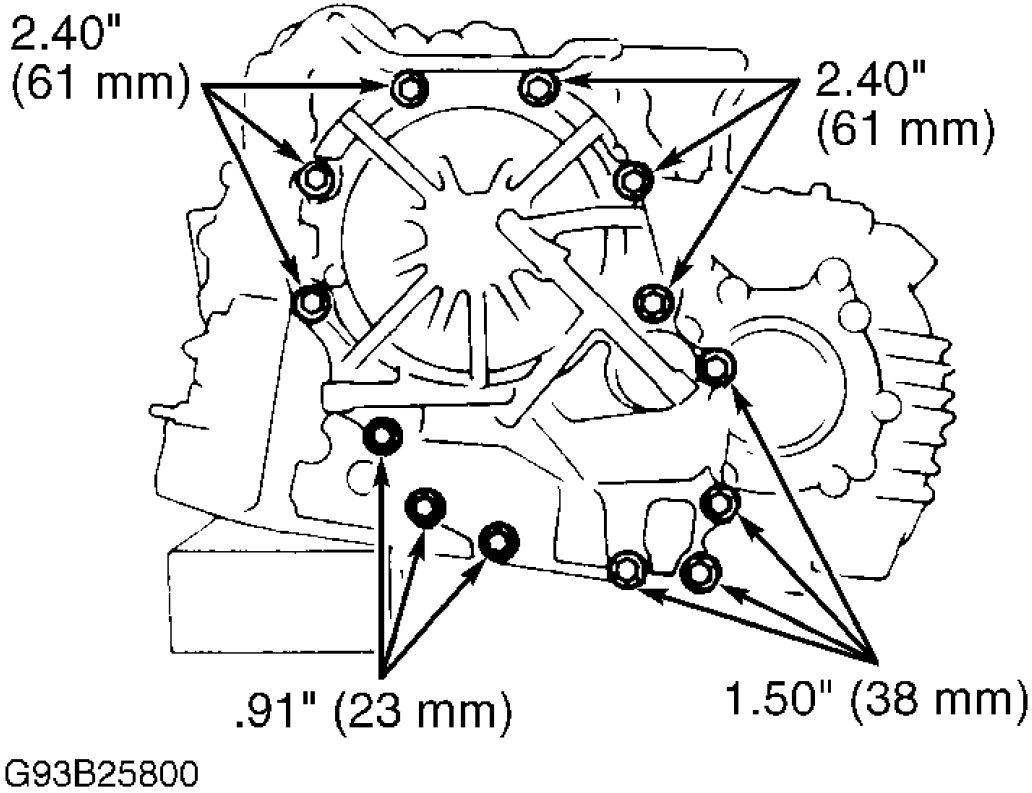

Fig. 66: Locating Overdrive Assembly Bolts
Courtesy of TOYOTA MOTOR SALES, U.S.A., INC.

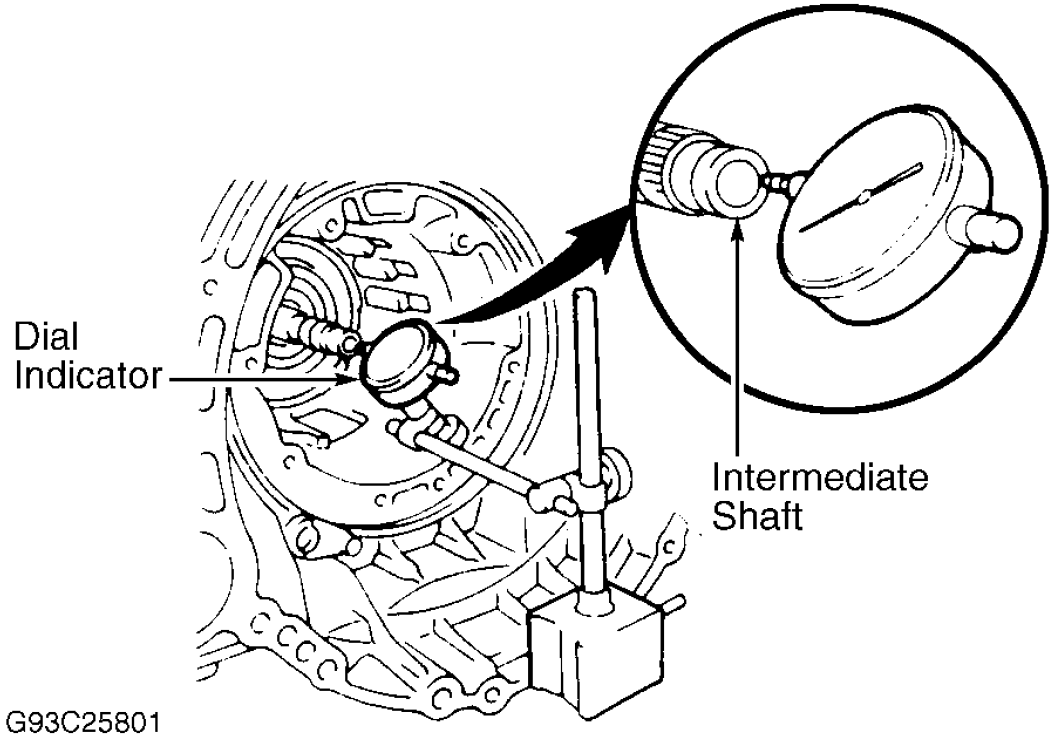

Fig. 67: Checking Intermediate Shaft End Play
Courtesy of TOYOTA MOTOR SALES, U.S.A., INC.

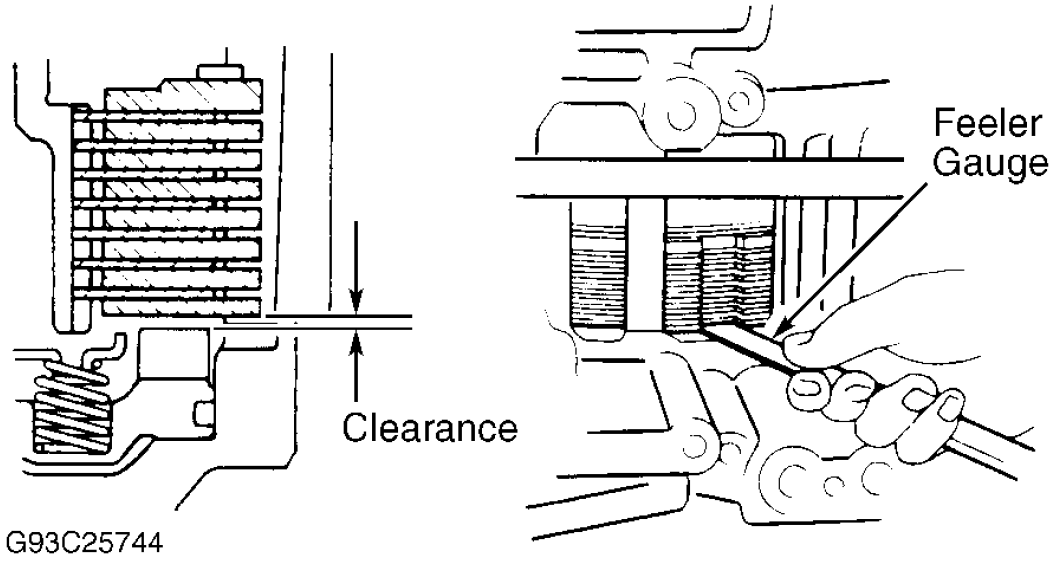

Fig. 68: Checking 1st & Reverse Brake Pack Clearance
Courtesy of TOYOTA MOTOR SALES, U.S.A., INC.

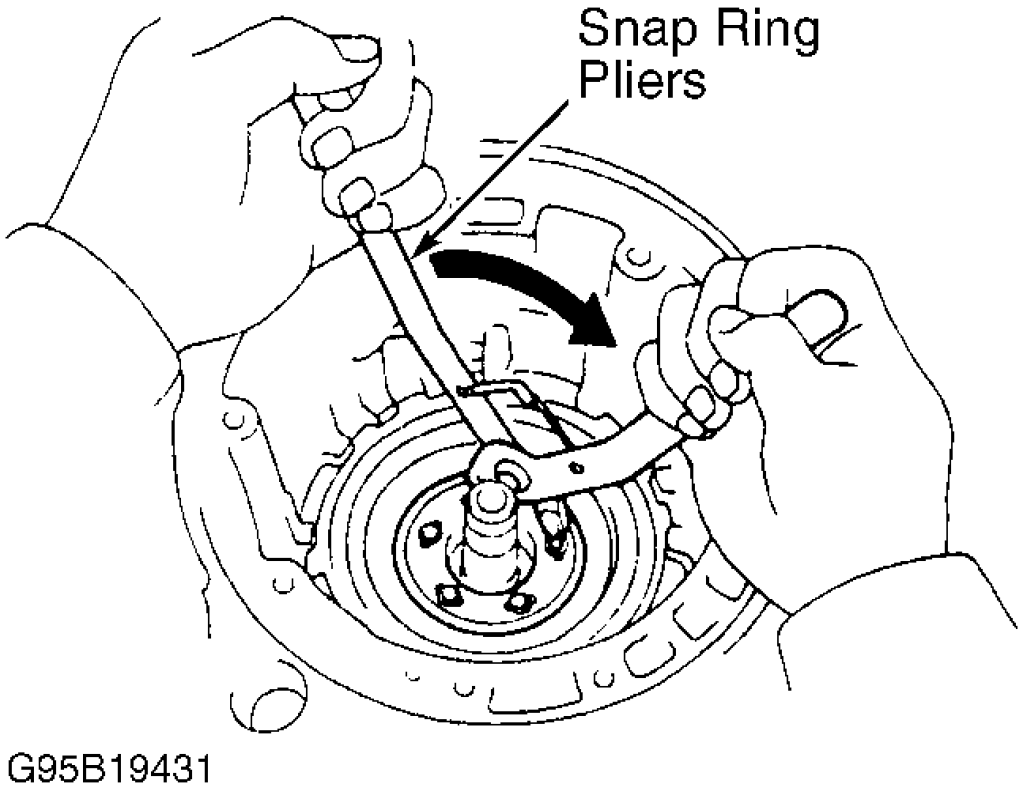

Fig. 69: Checking Operation Of No. 2 One-Way Clutch
Courtesy of TOYOTA MOTOR SALES, U.S.A., INC.

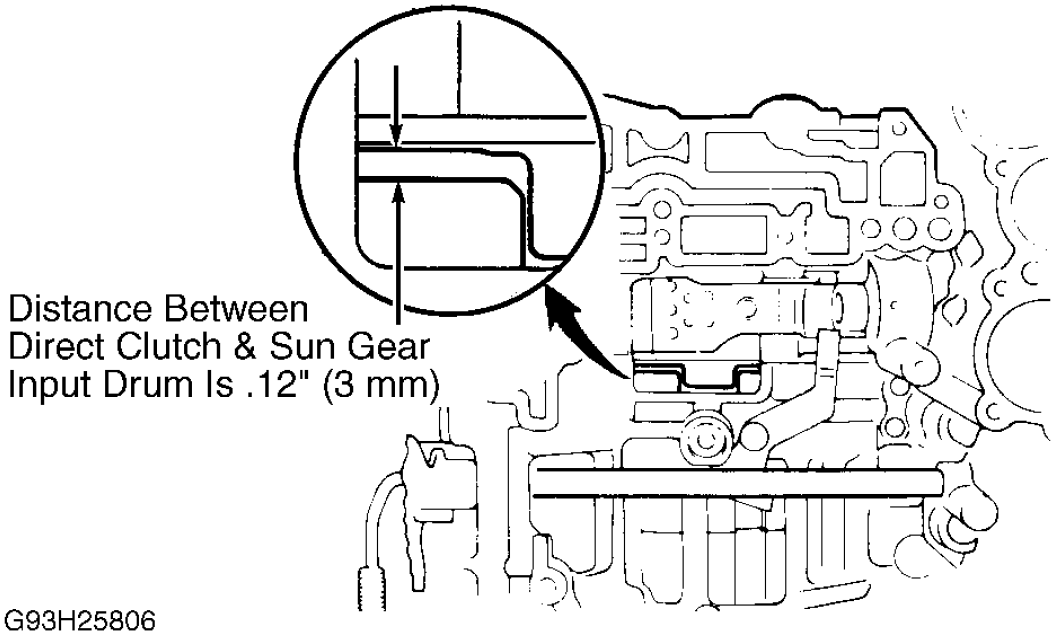

Fig. 70: Checking Direct Clutch & Sun Gear Drum Clearance
Courtesy of TOYOTA MOTOR SALES, U.S.A., INC.

15. Place oil pump over input shaft. Align bolt holes of pump body with transaxle case. DO NOT push on oil pump hard, or oil seal ring may stick to direct clutch drum. Tighten bolts to specification. See **TORQUE SPECIFICATIONS** .
16. Measure end play of input shaft. See **Fig. 71** . End play should be .010-.035" (.25-.90 mm) for A-540E and A-541E transaxles or .012-.035" (.30-.90 mm) for A-540H transaxle. If end play is not within specification, replace front bearing on forward clutch. Bearings are available in thicknesses of .142" (3.60 mm) and .165" (4.19 mm) for A-540E and A-541E transaxles or in thicknesses of .031" (.08 mm) and .055" (1.40 mm) for A-540H transaxle. Check input shaft rotation. Ensure shaft turns smoothly.

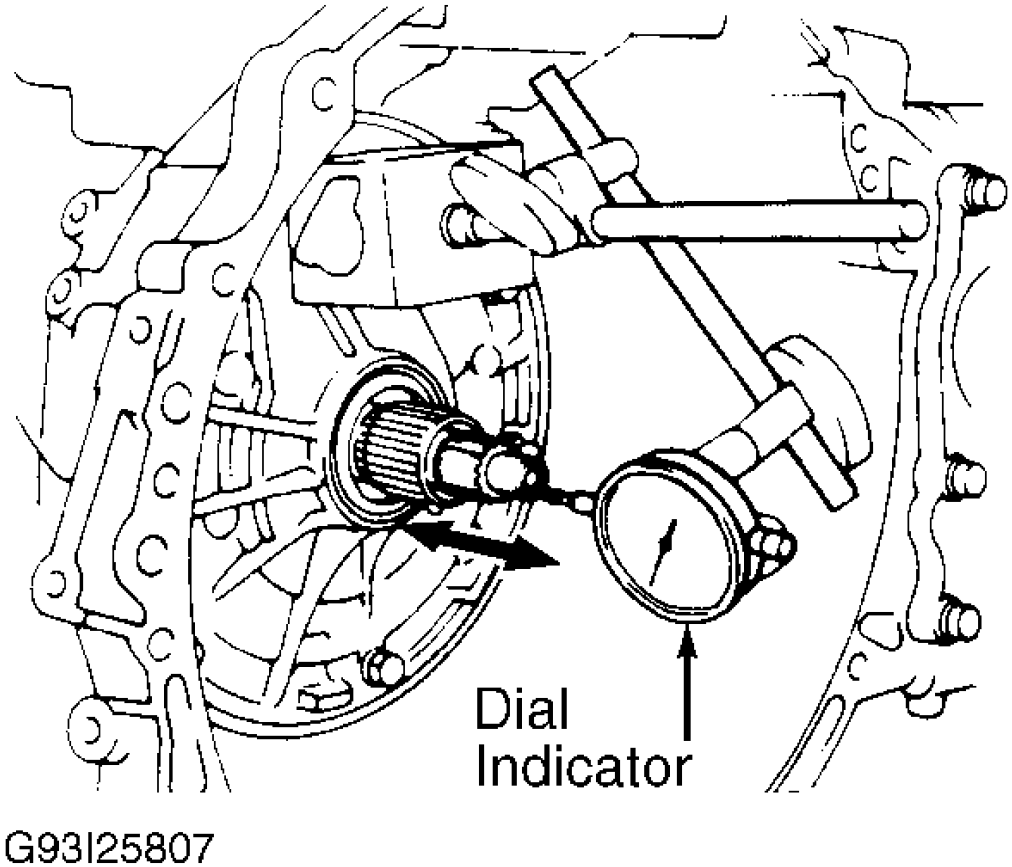

Fig. 71: Measuring Input Shaft End Play
Courtesy of TOYOTA MOTOR SALES, U.S.A., INC.

17. Install 2nd coast brake piston. Install outer spring with piston. Place cover in bore. See **Fig. 30** . Install snap ring while pressing in on cover. Ensure front end of piston rod contacts center of 2nd brake band depression.
18. Check 2nd coast brake piston stroke. Apply mark to piston rod at point were piston rod contacts case. Measure 2nd coast piston stroke by applying and releasing 57-114 psi (4-8 kg/cm^2) of compressed air. See **Fig. 12** . Piston stroke should be .079-.138" (2.00-3.50 mm).
19. If stroke exceeds specification, replace piston rod with longer rod. Piston rods are available in 2 sizes: 3.748" (95.20 mm) or 3.791" (96.30 mm). After installation of NEW rod, re-measure stroke. If stroke exceeds specification, replace brake band.
20. Install accumulator pistons and springs in bores. See **Fig. 10** . See **ACCUMULATOR SPRING SPECIFICATIONS** table. Install accumulator cover with NEW gasket. Tighten bolts in crisscross pattern to specification.

ACCUMULATOR SPRING SPECIFICATIONS

Application	Color	Free Length - In. (mm)
A-540E		
Direct Clutch	Yellow/Purple	2.173 (55.20)
2nd Brake	Blue/White	2.701 (68.60)
Forward Clutch	Blue/Green	2.803 (71.20)
A-540H		
Direct Clutch	Red	2.008 (51.00)
2nd Brake	Blue/White	2.701 (68.60)
Forward Clutch	Pink	2.433 (61.80)
A-541E		
Direct Clutch	Yellow/Purple	2.039 (51.08)
2nd Brake		
1997	Brown/Pink	3.035 (77.10)
1998		
Inner	None	3.472 (88.20)
Outer	None	2.768 (70.30)
Forward Clutch	None	2.898 (73.60)

21. Install 2nd brake apply gasket. Install throttle cable and solenoid wire. Place valve body on transaxle. While holding cam down with hand, slip cable end in slot. Lower valve body into position. DO NOT entangle solenoid wiring. Install valve body bolts. Ensure proper length and location of bolts. See **Fig. 1** . Finger tighten all bolts. Tighten bolts in crisscross pattern to specification. See **TORQUE SPECIFICATIONS** .
22. Install 1st and reverse brake apply tube. Install connector clamp and tube retainer. Connect solenoid connectors. Using a plastic hammer, install oil tubes. DO NOT bend or damage tubes. Place manual valve body on transmission. Align manual lever with pin of manual shaft lever. Lower manual valve body into position. Ensure proper length and location of bolts. See **Fig. 3** . Finger tighten bolts. Evenly tighten bolts in crisscross pattern.
23. Install detent spring. Ensure proper length and location of each bolt. Finger tighten bolts. Check for correct operation of manual valve lever. Ensure lever is touching center of detent spring tip roller.
24. Install tube bracket and oil strainer. Install magnets in oil pan. Ensure magnets do not interfere with oil tubes. Install oil pan with NEW gasket. Install vehicle speed sensor with "O" ring (as applicable). Install speed sensor connector. Install throttle cable retaining plate. Install solenoid wire.
25. Install transaxle case upper cover. Install direct clutch speed (T/M revolution) sensor (if equipped). Install park/neutral position switch to manual valve shaft. Install NEW locking plate. Tighten nut and stake with locking plate. Adjust switch by aligning groove and neutral basic line. Tighten bolts. Install manual shift lever.
26. On A-540H transaxle, install NEW snap ring to shaft groove and install differential side gear intermediate shaft. See **Fig. 63** . Keeping intermediate shaft on pinion shaft of differential, measure shaft protrusion length from transaxle case surface to end of shaft. Protrusion length should be 10.059" (255.50 mm).
27. Install NEW apply gasket on differential carrier cover. Install transfer case assembly to transaxle. Apply seal packing Three Bond (1281) or Loctite (518) to contacting surface of transaxle case. Coat threads of

bolts with Three Bond (1324) sealer. Install and tighten nuts and bolts to 51 ft. lbs. (69 N.m). Install breather hose to driven pinion bearing cage and transaxle upper cover.

28. On all transaxles, install cooler line union and elbow. Install elbow at right angles to bottom of case. Install torque converter. Ensure converter is full of ATF before installation. Check installed position by measuring installed depth from edge of case. See **Fig. 72** . Distance should be .539" (13.7 mm).

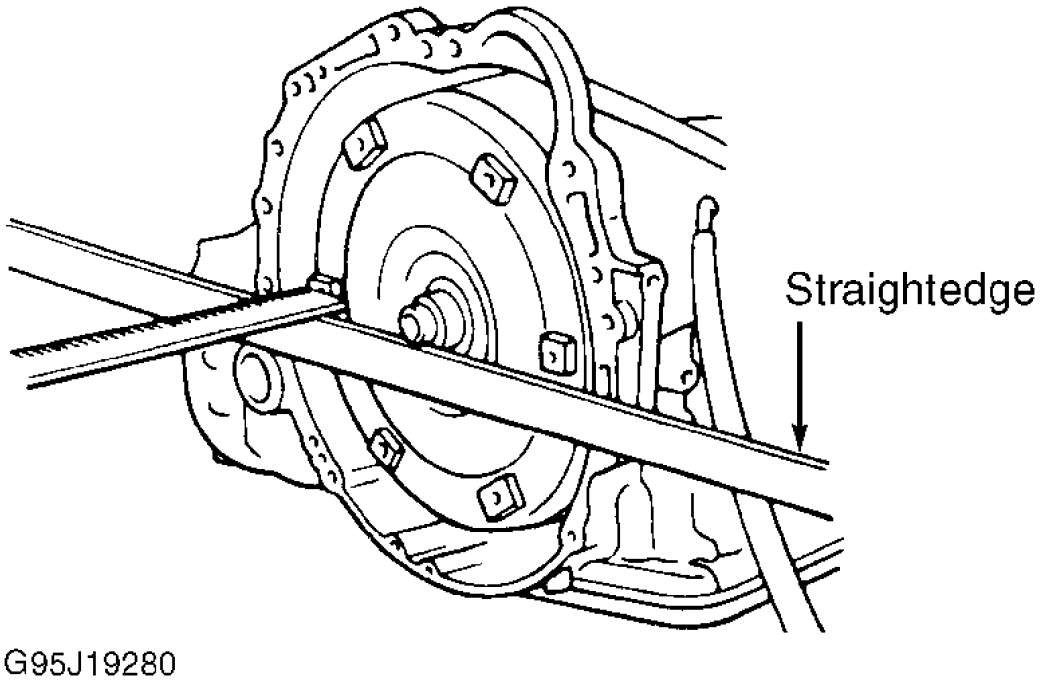

Fig. 72: Measuring Torque Converter Installed Depth
Courtesy of TOYOTA MOTOR SALES, U.S.A., INC.

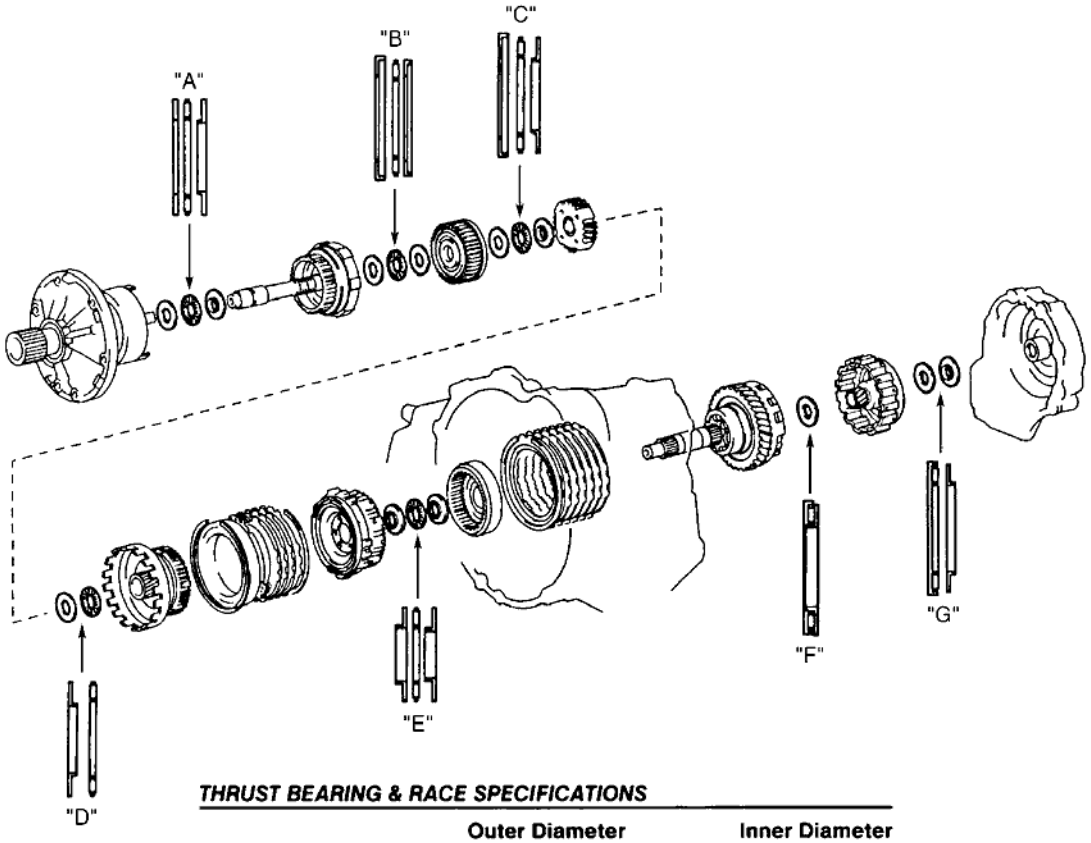

THRUST BEARING & RACE SPECIFICATIONS

Application	Outer Diameter In. (mm)	Inner Diameter In. (mm)
"A"		
Front Race	1.693 (43)	1.201 (30.5)
Rear Race	1.654 (42)	1.067 (27.1)
Bearing	1.654 (42)	1.138 (28.9)
"B"		
Front Race	1.492 (37.9)	.866 (22)
Rear Race	1.406 (35.7)	.906 (23)
Bearing	1.421 (36.1)	.874 (22.2)
"C"		
Front Race	1.492 (37.9)	.866 (22)
Rear Race	1.378 (35)	.748 (19)
Bearing	1.421 (36.1)	.874 (22.2)
"D"		
Front Race	1.772 (45)	1.102 (28)
Bearing	1.772 (45)	1.181 (30)
"E"		
Front Race	1.469 (37.3)	.949 (24.1)
Rear Race	1.480 (37.6)	.874 (22.2)
Bearing	1.480 (37.6)	.945 (24)
"F"		
Rear Race	1.693 (43)	.965 (24.5)
Bearing	1.823 (46.3)	1.1031 (26.2)

G96E04910

Fig. 73: Identifying Thrust Bearing & Race Locations (A-540H)
Courtesy of TOYOTA MOTOR SALES, U.S.A., INC.

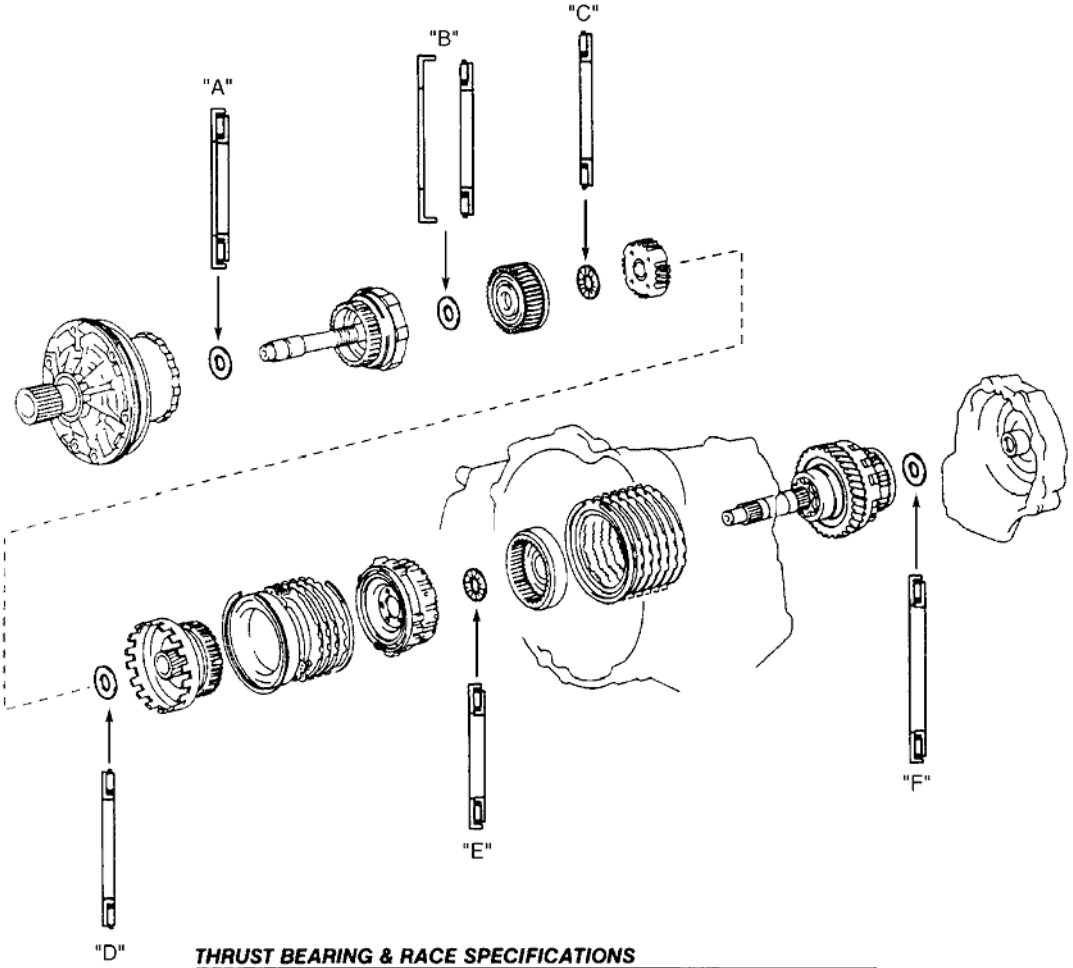

THRUST BEARING & RACE SPECIFICATIONS

Application	Outer Diameter In. (mm)	Inner Diameter In. (mm)
"A"		
Bearing	1.807 (45.9)	1.091 (27.7)
"B"		
Bearing	1.874 (47.6)	1.236 (31.4)
"C"		
Bearing	1.791 (45.5)	1.185 (30.1)
"D"		
Bearing	1.791 (45.5)	1.185 (30.1)
"E"		
Bearing	1.524 (38.7)	.890 (22.6)
"F"		
Bearing	1.823 (46.3)	1.126 (28.6)

G95C19531

Fig. 74: Identifying Thrust Bearing & Race Locations (A-540E & A-541E)
Courtesy of TOYOTA MOTOR SALES, U.S.A., INC.

CLUTCH DISC & PLATE SPECIFICATIONS

CLUTCH DISC & PLATE QUANTITY (1)

Component	Disc	Plate
OD Direct Clutch	2	2
Forward Clutch	5	5
Direct Clutch	3	3
2nd Brake	3	3
1st & Reverse Brake		
A-540E	7	7
A-541E	6	6
OD Brake	3	3
(1) Information for A-540H transaxle is not available from manufacturer.		

TORQUE SPECIFICATIONS

TORQUE SPECIFICATIONS

Application	Ft. Lbs. (N.m)
Counter Drive Gear Lock Nut	207 (280)
Differential	
Carrier Cover Bolt	29 (39)
Front Right Case-To-Front Left Case Torx Screw	24 (33)
Left Case-To-Right Case Bolt	46 (63)
Left Side Bearing Retainer Bolt	14 (19)
Right Retainer Bolt	14 (19)
Drive Plate Bolt	61 (83)
Oil Cooler Pipe Union Bolt	20 (27)
Oil Pump Bolt	16 (22)
Overdrive Case-To-Transaxle Case Bolts	18 (25)
Ring Gear-To-Differential Case Bolts	91 (124)
Transfer Case-To-Transaxle Bolt & Nut	51 (69)
	INCH Lbs. (N.m)
Accumulator-To-Cover Bolt	89 (10)
Manual Valve Bolt	97 (11)
Oil Pan Bolt	
A-540E & A-541E	43 (4.9)
A-540H	69 (7.8)
Oil Pump Body-To-Stator Shaft Bolt	89 (10)
Oil Strainer Bolt	97 (11)
Parking Lock Pawl Bracket Bolt	65 (7.4)
Park Neutral Position Switch	
Bolt	48 (5.4)

Nut	61 (6.9)
Solenoid Bolt	58 (6.6)
Speed Sensor Bolt	48 (5.4)
Transfer Case Adjusting Lock-Plate Bolt	64 (7.2)
Upper Valve Body-To-Lower Valve Body Bolt	58 (6.6)
Valve Body-To-Transaxle Case Bolt	97 (11)

TRANSAXLE SPECIFICATIONS

TRANSAXLE SPECIFICATIONS

Application	**In. (mm)**
Bushing Inside Diameter (Maximum)	
Direct Clutch	
A-540E & A-541E	1.900 (48.27)
A-540H	1.853 (47.07)
Oil Pump Body	1.503 (38.18)
OD Direct Clutch	.871 (22.13)
Planetary Ring Gear Flange	
A540E & A-541E	1.184 (30.08)
A-540H	.752 (19.10)
Sun Gear	
A-540E & A-541E	.889 (22.59)
A-540H	.870 (22.09)
Stator Shaft	.849 (21.57)
Clutch Pack Clearances	
1st & Reverse Brake	
A-540E	.033-.081 (.85-2.05)
A-540H	.041-.085 (1.04-2.16)
A-541E	.076-.106 (1.92-2.68)
End Play	
Differential (A-540H)	.007-.32 (.18-.82)
Input Shaft	
A-540E & A-541E	.010-.035 (.25-.90)
A-540H	.012-.035 (.30-.90)
Intermediate Shaft	.019-.059 (.47-1.50)
Intermediate Shaft Protrusion Length (A-540H)	10.059 (255.50)
Oil Pump (Standard Measurements)	
Body Clearance Of Driven Gear	.0028-.0059 (.070-.150)
Tip Clearance Of Driven Gear	.0043-.0055 (.110-.140)
Gear Side Clearance	.0008-.0020 (.020-.050)
Piston Stroke	

Direct Clutch	
A-540E & A-541E	.036-.053 (.91-1.35)
A-540H	.044-.058 (1.11-1.47)
Forward Clutch	
A-540E & A-541E	.071-.087 (1.79-2.21)
A-540H	.056-.072 (1.41-1.82)
2nd Coast Brake	.079-.138 (2.00-3.50)
OD Direct Clutch	.069-.098 (1.75-2.49)
OD Planetary Pinion Gear Thrust Clearance (A-540H)	.006-.022 (.16-.56)
Planetary Pinion Gear Thrust Clearance	
A-540E & A-541E	.006-.022 (.16-.56)
A-540H	.008-.020 (.20-.50)
Pinion Gear Backlash	.002-.008 (.05-.20)
Torque Converter Runout (Maximum)	
Drive Plate	.008 (.20)
Sleeve	.012 (.30)