# 2013 TITAN

## OWNER'S MANUAL

For your safety, read carefully and keep in this vehicle.

# FOREWORD

Welcome to the growing family of new NISSAN owners. This vehicle is delivered to you with confidence. It was produced using the latest techniques and strict quality control.

This manual was prepared to help you understand the operation and maintenance of your vehicle so that you may enjoy many miles (kilometers) of driving pleasure. Please read through this manual before operating your vehicle.

**A separate Warranty Information Booklet explains details about the warranties covering your vehicle. The "NISSAN Service and Maintenance Guide" explains details about maintaining and servicing your vehicle. Additionally, a separate Customer Care/Lemon Law Booklet (U.S. only) will explain how to resolve any concerns you may have with your vehicle, as well as clarify your rights under your state's lemon law.**

Your NISSAN dealership knows your vehicle best. When you require any service or have any questions, they will be glad to assist you with the extensive resources available to them.

In addition to factory installed options, your vehicle may also be equipped with additional accessories installed by NISSAN or by your NISSAN dealer prior to delivery. It is important that you familiarize yourself with all disclosures, warnings, cautions and instructions concerning proper use of such accessories prior to operating the vehicle and/or accessory. See a NISSAN dealer for details concerning the particular accessories with which your vehicle is equipped.

# READ FIRST—THEN DRIVE SAFELY

Before driving your vehicle, please read this Owner's Manual carefully. This will ensure familiarity with controls and maintenance requirements, assisting you in the safe operation of your vehicle.

**⚠ WARNING**

**IMPORTANT SAFETY INFORMATION REMINDERS FOR SAFETY!**

**Follow these important driving rules to help ensure a safe and comfortable trip for you and your passengers!**

- **NEVER drive under the influence of alcohol or drugs.**
- **ALWAYS observe posted speed limits and never drive too fast for conditions.**
- **ALWAYS give your full attention to driving and avoid using vehicle features or taking other actions that could distract you.**
- **ALWAYS use your seat belts and appropriate child restraint systems. Pre-teen children should be seated in the rear seat.**
- **ALWAYS provide information about the proper use of vehicle safety features to all occupants of the vehicle.**
- **ALWAYS review this Owner's Manual for important safety information.**

For descriptions specified for four-wheel drive models, a 4x4 mark is placed at the beginning of the applicable sections/items.

**As with other vehicles with features for off-road use, failure to operate four-wheel drive models correctly may result in loss of control or an accident. Be sure to read "Driving safety precautions" in the "Starting and driving" section of this manual.**

**ON-PAVEMENT AND OFF-ROAD DRIVING**

**This vehicle will handle and maneuver differently from an ordinary passenger car because it has a higher center of gravity for off-road use. As with other vehicles with features of this type, failure to operate this vehicle correctly may result in loss of control or an accident.**

**Be sure to read "On-pavement and off-road driving precautions", and "Avoiding collision and rollover", and "Driving safety precautions", in the "Starting and driving" section of this manual.**

**MODIFICATION OF YOUR VEHICLE**

**This vehicle should not be modified. Modification could affect its performance, safety or durability, and may even violate governmental regulations. In addition, damage or performance problems resulting from modifications may not be covered under NISSAN warranties.**

This manual includes information for all options available on this model. Therefore, you may find some information that does not apply to your vehicle.

All information, specifications and illustrations in this manual are those in effect at the time of printing. NISSAN reserves the right to change specifications or design without notice and without obligation.

## IMPORTANT INFORMATION ABOUT THIS MANUAL

You will see various symbols in this manual. They are used in the following ways:

**⚠ WARNING**

**This is used to indicate the presence of a hazard that could cause death or serious personal injury. To avoid or reduce the risk, the procedures must be followed precisely.**

**⚠ CAUTION**

**This is used to indicate the presence of a hazard that could cause minor or moderate personal injury or damage to your vehicle. To avoid or reduce the risk, the procedures must be followed carefully.**

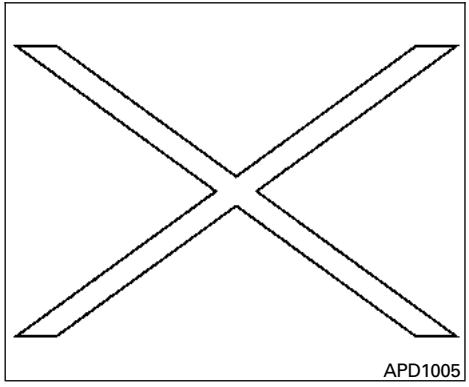


If you see this symbol, it means **“Do not do this”** or **“Do not let this happen.”**

If you see a symbol similar to these in an illustration, it means the arrow points to the front of the vehicle.

Arrows in an illustration that are similar to these indicate movement or action.

Arrows in an illustration that are similar to these call attention to an item in the illustration.

## CALIFORNIA PROPOSITION 65 WARNING

**⚠ WARNING**

**Engine exhaust, some of its constituents, and certain vehicle components contain or emit chemicals known to the State of California to cause cancer and birth defects or other reproductive harm. In addition, certain fluids contained in vehicles and certain products of component wear contain or emit chemicals known to the State of California to cause cancer and birth defects or other reproductive harm.**

## CALIFORNIA PERCHLORATE ADVISORY

**Some vehicle parts, such as lithium batteries, may contain perchlorate material. The following advisory is provided: “Perchlorate Material – special handling may apply, See www.dtsc.ca.gov/hazardouswaste/perchlorate/”.**

BLUETOOTH® is a trademark owned by Bluetooth SIG, Inc. and licensed to Visteon and Bosch.

SiriusXM Satellite Radio requires subscription, sold separately. Not available in Alaska, Hawaii or Guam. For more information, visit www.siriusxm.com.

© 2012 NISSAN NORTH AMERICA, INC.

All rights reserved. No part of this Owner’s Manual may be reproduced or stored in a retrieval system, or transmitted in any form, or by any means, electronic, mechanical, photocopying, recording or otherwise, without the prior written permission of Nissan North America, Inc.

# NISSAN CUSTOMER CARE PROGRAM

**NISSAN CARES . . .**

Both NISSAN and your NISSAN dealer are dedicated to serving all your automotive needs. Your satisfaction with your vehicle and your NISSAN dealer are our primary concerns. Your NISSAN dealer is always available to assist you with all your automobile sales and service needs.

However, if there is something that your NISSAN dealer cannot assist you with or you would like to provide NISSAN directly with comments or questions, please contact the NISSAN Consumer Affairs Department using our toll-free number:

**For U.S. customers**
**1-800-NISSAN-1**
**(1-800-647-7261)**

**For Canadian customers**
**1-800-387-0122**

The Consumer Affairs Department will ask for the following information:

- Your name, address, and telephone number
- Vehicle identification number (attached to the top of the instrument panel on the driver's side)
- Date of purchase
- Current odometer reading
- Your NISSAN dealer's name
- Your comments or questions

OR

You can write to NISSAN with the information at:

**For U.S. customers**
**Nissan North America, Inc.**
**Consumer Affairs Department**
**P.O. Box 685003**
**Franklin, TN 37068-5003**
**or via e-mail at:**
**nnaconsumeraffairs@nissan-usa.com**

**For Canadian customers**
**Nissan Canada Inc.**
**5290 Orbitor Drive**
**Mississauga, Ontario L4W 4Z5**
**or via e-mail at:**
**information.centre@nissancanada.com**

If you prefer, visit us at:
**www.nissanusa.com** (for U.S. customers) or
**www.nissan.ca** (for Canadian customers)

We appreciate your interest in NISSAN and thank you for buying a quality NISSAN vehicle.

# Table of Contents


| | |
|---|---|
| Illustrated table of contents | 0 |
| Safety—Seats, seat belts and supplemental restraint system | 1 |
| Instruments and controls | 2 |
| Pre-driving checks and adjustments | 3 |
| Monitor, climate, audio, phone and voice recognition systems | 4 |
| Starting and driving | 5 |
| In case of emergency | 6 |
| Appearance and care | 7 |
| Maintenance and do-it-yourself | 8 |
| Technical and consumer information | 9 |
| Index | 10 |

# 0 Illustrated table of contents

Air bags, seat belts and child restraints . . . . . 0-2
Exterior front . . . . . 0-3
Exterior rear. . . . . 0-4
Passenger compartment . . . . . 0-5
Instrument panel. . . . . 0-6
Engine compartment check locations . . . . . 0-8
Warning/indicator lights . . . . . 0-9

## AIR BAGS, SEAT BELTS AND CHILD RESTRAINTS

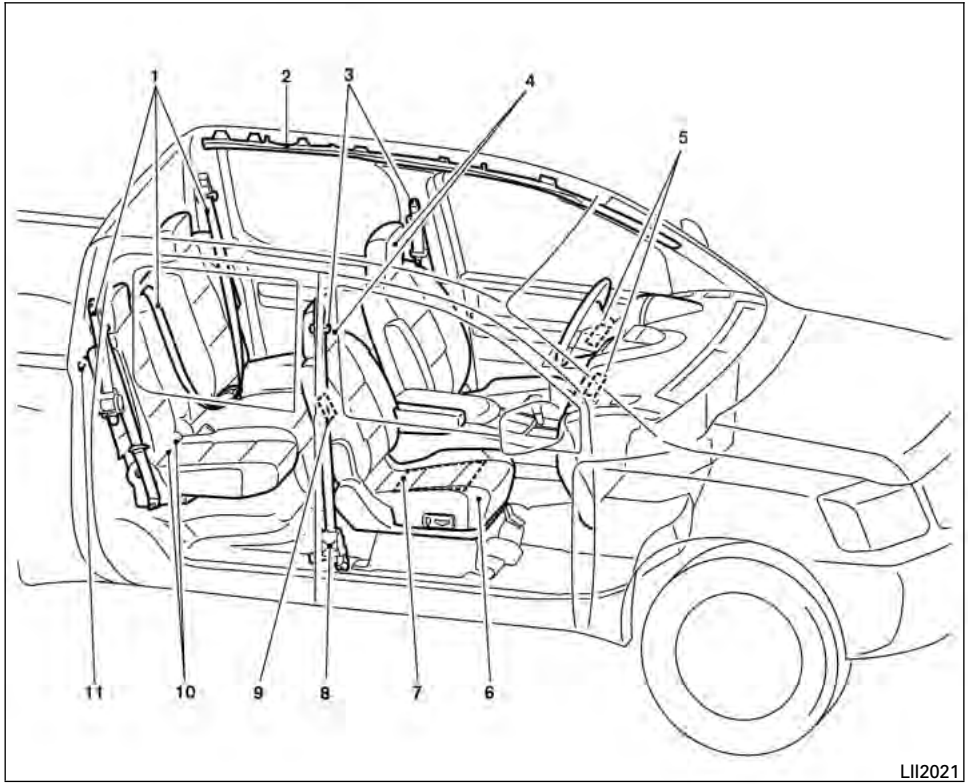


1. 2nd row seat belts (P. 1-15)
2. Roof-mounted curtain side-impact and rollover supplemental air bag (P. 1-47)
3. Front seat belts (P. 1-15)
4. Front-seat Active Head Restraints
5. Supplemental front-impact air bags (P. 1-47)
6. Seats (P. 1-2)
7. Occupant classification sensor (pressure sensor) (P. 1-56)
8. Seat belt with pretensioner (P. 1-60)
9. Front seat-mounted side-impact supplemental air bag (P. 1-47)
10. LATCH (Lower Anchors and Tethers for Children) (P. 1-28)
11. Top tether strap anchor point (P. 1-30)

**See the page number indicated in parentheses for operating details.**

## EXTERIOR FRONT

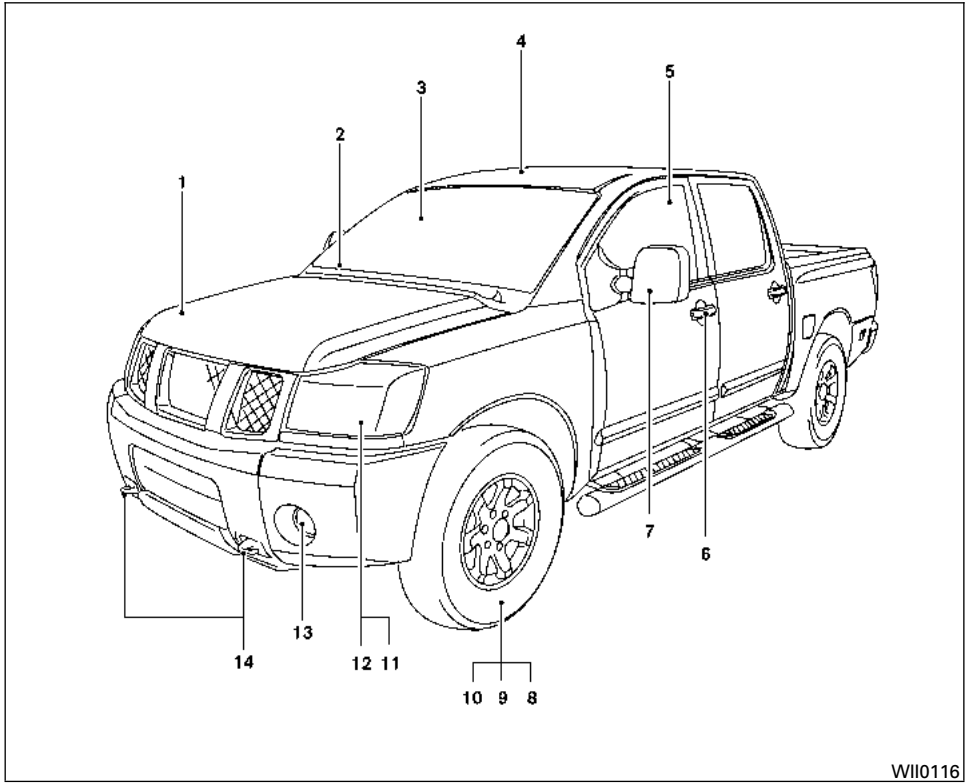


1. Engine hood (P. 3-11)
2. Windshield wiper and washer switch (P. 2-27)
3. Windshield (P. 8-20)
4. Moonroof (if so equipped) (P. 2-54)
5. Power windows (P. 2-51)
6. Door locks, keyfob, keys (P. 3-3, 3-7, 3-2)
7. Mirrors (P. 3-16)
8. Tire pressure (P. 9-12)
9. Flat tire (P. 6-2)
10. Tire chains (P. 8-40)
11. Replacing bulbs (P. 8-30)
12. Headlight and turn signal switch (P. 2-30)
13. Fog light switch (if so equipped) (P. 2-33)
14. Tow hooks (if so equipped) (P. 6-13)

**See the page number indicated in parentheses for operating details.**

## EXTERIOR REAR

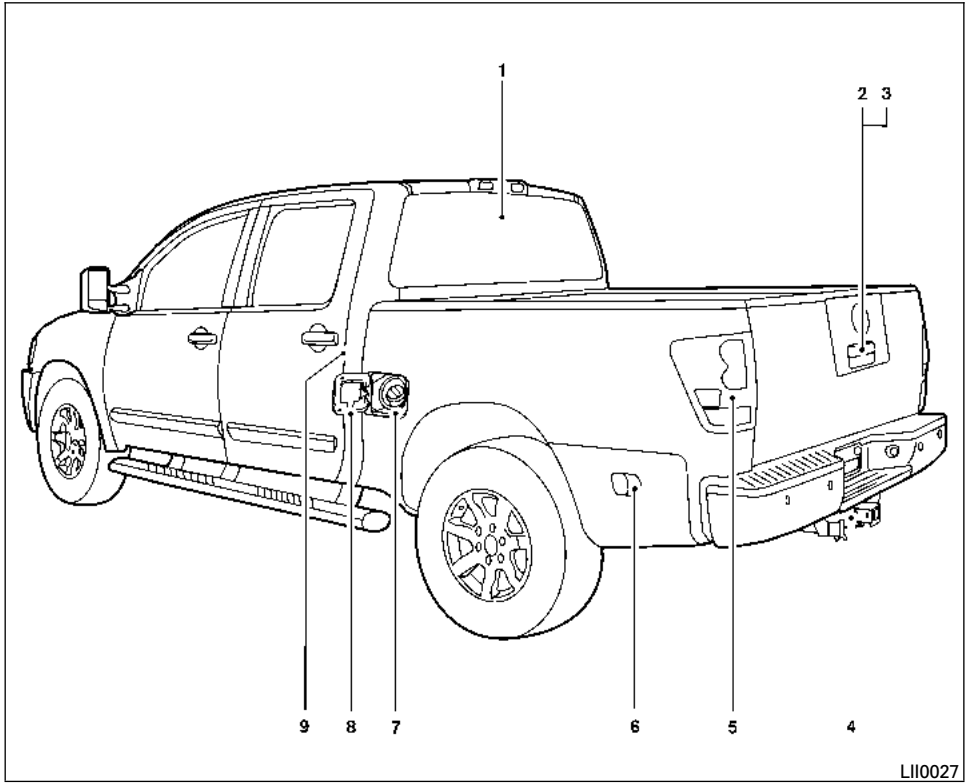


1. Rear sliding window (if so equipped) (P. 2-53)
2. Vehicle loading (P. 9-13)
3. Tailgate/Truckbox (P. 3-21)
4. Trailer hitch/Towing (if so equipped) (P. 9-24)
5. Replacing bulbs (P. 8-30)
6. Bedside storage compartment (if so equipped) (P. 2-50)
7. Fuel-filler cap, fuel recommendation (P. 3-12, P. 9-3, 9-5)
8. Fuel-filler door (P. 3-12)
9. Child safety rear door lock (Crew Cab models only) (P. 3-7)

**See the page number indicated in parentheses for operating details.**

## PASSENGER COMPARTMENT

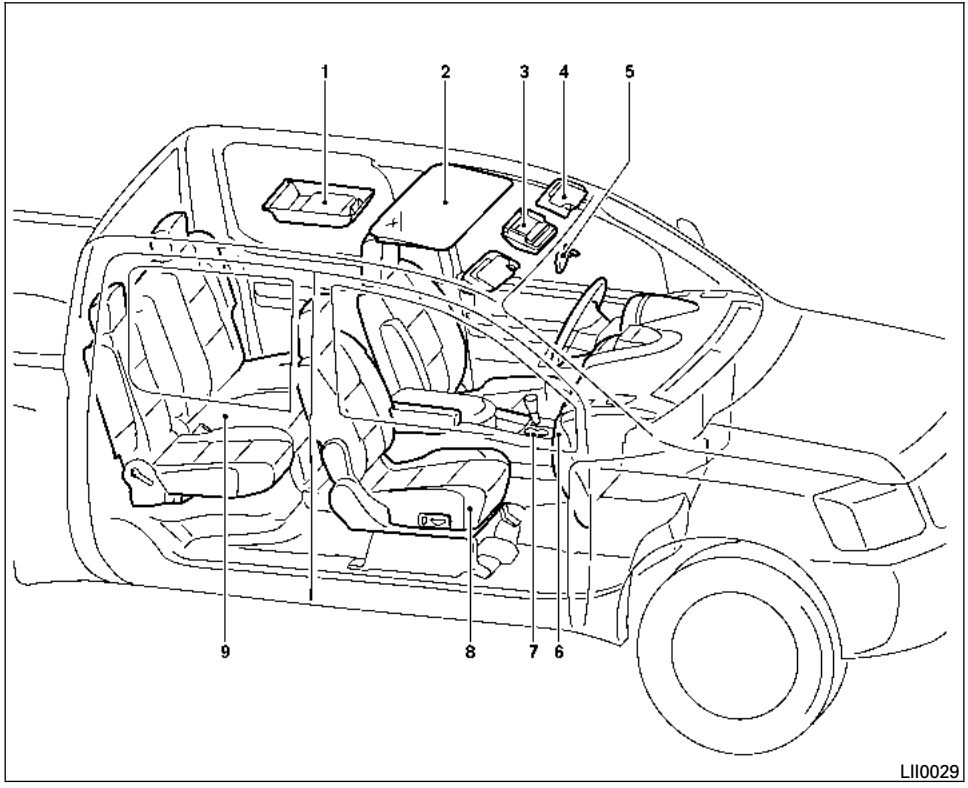


1. DVD entertainment system (if so equipped) (P. 4-73)
2. Moonroof (if so equipped) (P. 2-54)
3. Map lights (if so equipped) (P. 2-58)
4. Sun visors (P. 3-15)
5. HomeLink® (if so equipped) (P. 2-58)
6. Glove box (P. 2-45)
7. Cup holders (P. 2-47)
8. Front seats (P. 1-2)
9. Folding rear bench seat (P. 1-13)

**See the page number indicated in parentheses for operating details.**

## INSTRUMENT PANEL

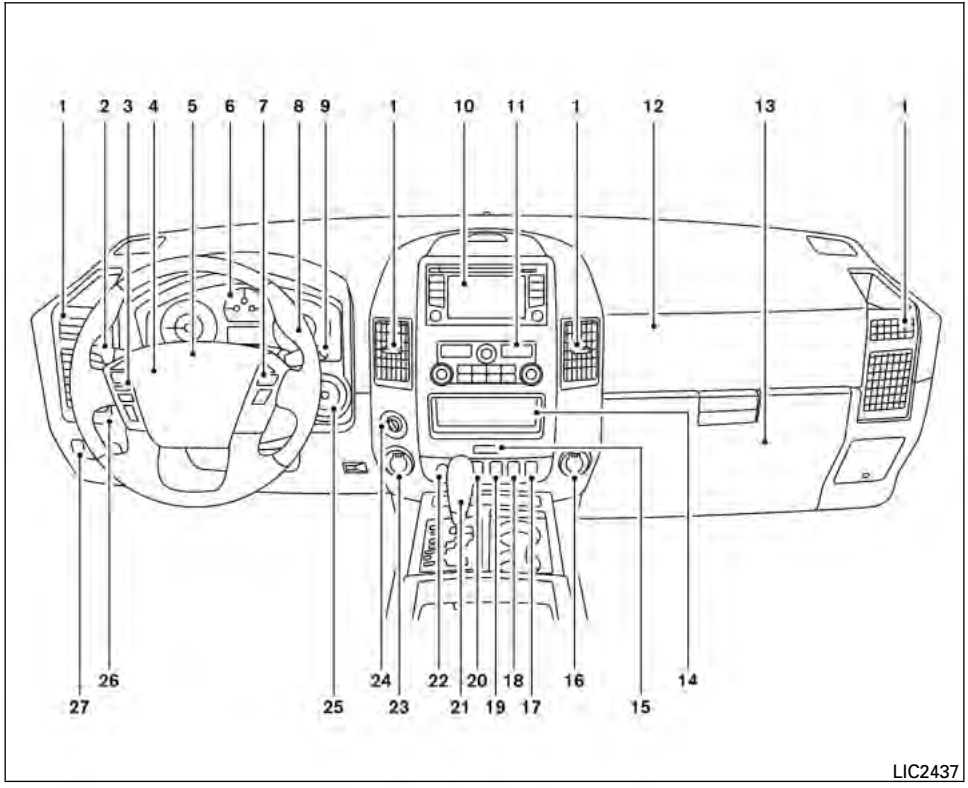


1. Vents (P. 4-17)
2. Headlight/fog light (if so equipped)/turn signal switch (P. 2-30)
3. Steering wheel switch for audio control/Bluetooth® Hands-Free Phone System (if so equipped) (P. 4-71, P. 4-83, P. 4-98, P. 4-109)
4. Instrument brightness control (P. 2-33)
5. Driver supplemental air bag/horn (P. 1-47, P. 2-34)
6. Meters, gauges and warning/indicator lights (P. 2-4, 2-13)
7. Cruise control main/set switches (if so equipped) (P. 5-21)
8. Shift selector (column) (if so equipped) (P. 5-16)
9. Windshield wiper/washer switch (P. 2-27)
10. Navigation system* (if so equipped) (P. 4-4)
11. Climate controls (P. 4-17, P. 4-25, P. 4-32)
12. Front passenger supplemental air bag (P. 1-47)
13. Glove box (P. 2-45)
14. Storage tray (P. 2-45)

15. Front passenger air bag status light (P. 1-56)
16. Power outlet (P. 2-39)
17. Heated seat switch (if so equipped) (P. 2-34)
18. Vehicle Dynamic Control (VDC) off switch (P. 2-36)
19. Tow mode switch (P. 2-38)
20. Electronic locking rear differential (E-Lock) system switch (if so equipped) (P.2-36)
21. Shift selector (console) (if so equipped) (P. 5-16)
22. Hazard warning flasher switch (P. 6-2)
23. Power outlet (P. 2-39)
24. 4WD shift switch (if so equipped) (P. 5-27)
25. Ignition switch (P. 5-9)
26. Tilt steering wheel control (P. 3-14)
27. Cargo lamp switch (if so equipped) (P. 2-34)/Rear sonar system off switch (if so equipped) (P. 2-38)/Pedal position adjustment switch (if so equipped) (P. 3-14)/Rear power window switch (if so equipped) (P. 2-54)

*: Refer to the separate Navigation System Owner's Manual (if so equipped).

**See the page number indicated in parentheses for operating details.**

## ENGINE COMPARTMENT CHECK LOCATIONS

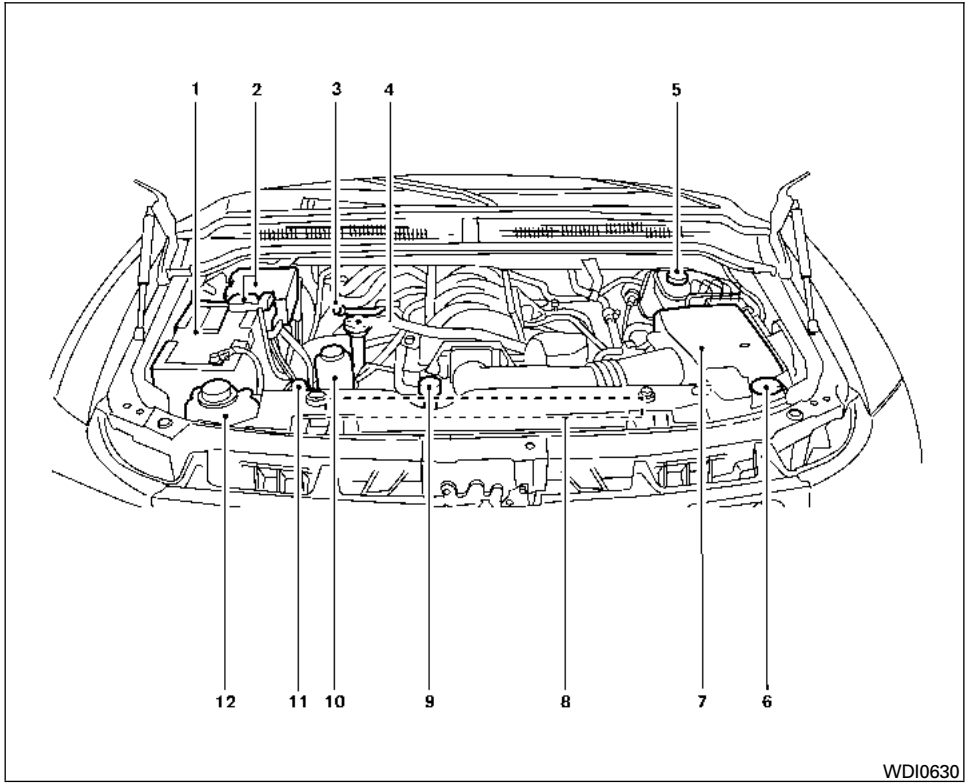


1. Battery (P. 8-14)
2. Fuse/fusible link box (P. 8-22)
3. Transmission dipstick (P. 8-11)
4. Engine oil filler cap (P. 8-9)
5. Brake fluid reservoir (P. 8-13)
6. Windshield-washer fluid reservoir (P. 8-13)
7. Air cleaner (P. 8-18)
8. Drive belt location (P. 8-16)
9. Radiator cap (P. 8-7)
10. Power steering fluid reservoir (P. 8-12)
11. Engine oil dipstick (P. 8-9)
12. Engine coolant reservoir (P. 8-7)

**NOTE:**

**Engine cover removed for clarity.**

**See the page number indicated in parentheses for operating details.**

## WARNING/INDICATOR LIGHTS

| Warning light | Name | Page |
|---|---|---|
| ABS or | Anti-lock Braking System (ABS) warning light | 2-14 |
| AT CHECK | Automatic transmission check warning light | 2-14 |
| ATP | Automatic transmission park warning light ( 4x4 model) | 2-14 |
| BRAKE or | Brake warning light | 2-14 |
| | Charge warning light | 2-15 |
| | Engine oil pressure low/engine coolant temperature high warning light | 2-15 |

| Warning light | Name | Page |
|---|---|---|
| 4WD | 4WD warning light ( 4x4 model) | 2-16 |
| | Low fuel warning light | 2-16 |
| | Low tire pressure warning light | 2-16 |
| | Master warning light (if so equipped) | 2-18 |
| | Seat belt warning light and chime | 2-18 |
| | Supplemental air bag warning light | 2-19 |

| Indicator light | Name | Page |
|---|---|---|
| DIFF LOCK | Electronic locking rear differential (E-Lock) system on indicator light (if so equipped) | 2-18 |

| Indicator light | Name | Page |
|---|---|---|
| OFF | Front passenger air bag status light | 2-19 |
| | High beam indicator light (Blue) | 2-19 |
| | Malfunction indicator light (MIL) | 2-19 |
| | Security indicator light (if so equipped) | 2-20 |
| | Slip indicator light | 2-20 |
| | Turn signal/hazard indicator lights | 2-20 |
| OFF | Vehicle Dynamic Control (VDC) off indicator light | 2-20 |

## MEMO

# 1 Safety—Seats, seat belts and supplemental restraint system


Seats . . . . . 1-2
Front manual captain's chair seat adjustment (if so equipped) . . . . . 1-2
Front manual bench seat adjustment (if so equipped) . . . . . 1-3
Front power seat adjustment (if so equipped) . . . . . 1-4
Armrests (if so equipped). . . . . 1-6
Head restraints (1st row only). . . . . 1-6
Head restraints (2nd row – outboard positions only) . . . . . 1-9
Flexible seating. . . . . 1-11
Seat belts . . . . . 1-15
Precautions on seat belt usage. . . . . 1-15
Pregnant women . . . . . 1-18
Injured persons. . . . . 1-18
Three-point type seat belt with retractor. . . . . 1-18
Two-point type seat belt without retractor (center of the front bench seat) (if so equipped) . . . . . 1-21
Seat belt extenders . . . . . 1-23
Seat belt maintenance . . . . . 1-23
Child safety. . . . . 1-24
Infants. . . . . 1-25
Small children. . . . . 1-25
Larger children . . . . . 1-25
Child restraints. . . . . 1-26
Precautions on child restraints . . . . . 1-26
LATCH (Lower Anchors and Tethers for CHildren) System . . . . . 1-28
Rear-facing child restraint installation using LATCH . . . . . 1-30
Rear-facing child restraint installation using the seat belts . . . . . 1-32
Forward-facing child restraint installation using LATCH. . . . . 1-35
Forward-facing child restraint installation using the seat belts — front passenger and rear bench seat . . . . . 1-36
Forward-facing child restraint installation using the seat belts — front bench center position . . . . . 1-40
Installing top tether strap (Rear bench seat) . . . . . 1-42
Booster seats . . . . . 1-43
Supplemental restraint system . . . . . 1-47
Precautions on supplemental restraint system . . . . . 1-47
Supplemental air bag warning labels. . . . . 1-61
Supplemental air bag warning light . . . . . 1-62

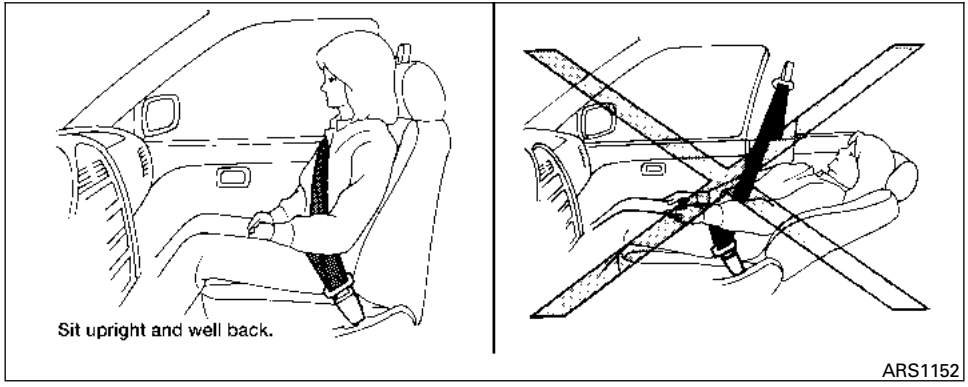


**WARNING**

- **Do not ride in a moving vehicle when the seatback is reclined. This can be dangerous. The shoulder belt will not be against your body. In an accident, you could be thrown into it and receive neck or other serious injuries. You could also slide under the lap belt and receive serious internal injuries.**

- **For the most effective protection when the vehicle is in motion, the seat should be upright. Always sit well back in the seat with both feet on the floor and adjust the seat properly. See "Precautions on seat belt usage" later in this section.**
- **After adjustment, gently rock in the seat to make sure it is securely locked.**
- **Do not leave children unattended inside the vehicle. They could unknowingly activate switches or controls. Unattended children could become involved in serious accidents.**
- **The seatback should not be reclined any more than needed for comfort. Seat belts are most effective when the passenger sits well back and straight up in the seat. If the seatback is reclined, the risk of sliding under the lap belt and being injured is increased.**

**CAUTION**

**When adjusting the seat positions, be sure not to contact any moving parts to avoid possible injuries and/or damage.**

## FRONT MANUAL CAPTAIN'S CHAIR SEAT ADJUSTMENT (if so equipped)

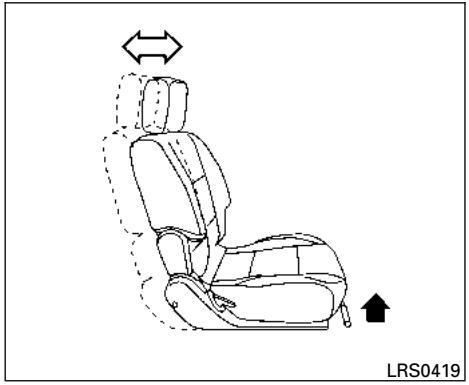


## Forward and backward

Pull the lever up and hold it while you slide the seat forward or backward to the desired position. Release the lever to lock the seat in position.

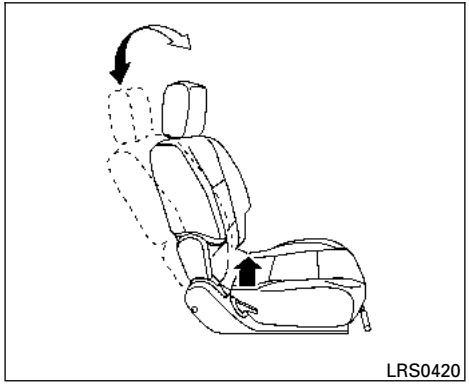


## Reclining

To recline the seatback, pull the lever up and lean back. To bring the seatback forward, pull the lever up and lean your body forward. Release the lever to lock the seatback in position.

The reclining feature allows adjustment of the seatback for occupants of different sizes for added comfort and to help obtain proper seat belt fit. See “Precautions on seat belt usage” later in this section. Also, the seatback can be reclined to allow occupants to rest when the vehicle is stopped and the transmission is in the P (Park) position.

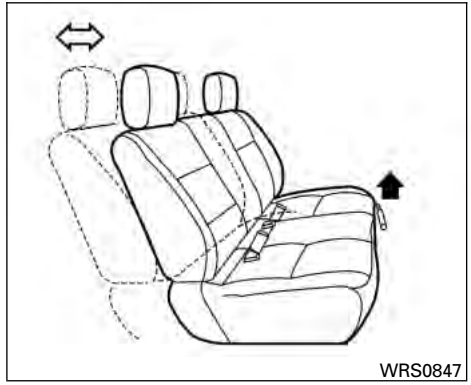


# FRONT MANUAL BENCH SEAT ADJUSTMENT (if so equipped)

## Forward and backward

Pull the lever up and hold it while you slide the seat forward or backward to the desired position. Release the lever to lock the seat in position.

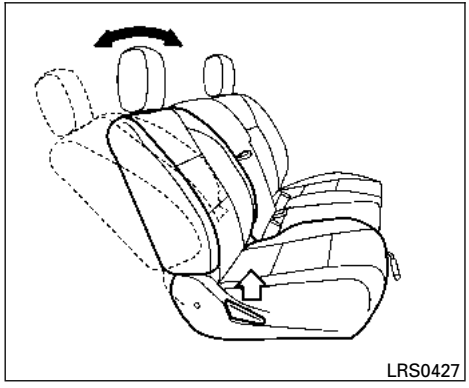


## Reclining

To recline the seatback, pull the lever up and lean back. To bring the seatback forward, pull the lever up and lean your body forward. Release the lever to lock the seatback in position.

The reclining feature allows adjustment of the seatback for occupants of different sizes for added comfort and to help obtain proper seat belt fit (see “Precautions on seat belt usage” later in this section). Also, the seatback can be reclined to allow occupants to rest when the vehicle is stopped and the transmission is in P (Park).

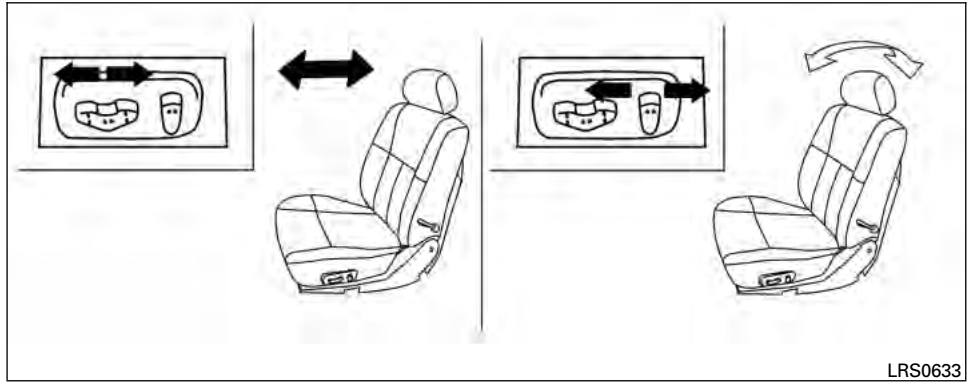


# FRONT POWER SEAT ADJUSTMENT (if so equipped)

## Operating tips

- The power seat motor has an auto-reset overload protection circuit. If the motor stops during operation, wait 30 seconds, then reactivate the switch.
- Do not operate the power seat switch for a long period of time when the engine is off. This will discharge the battery.

See “Automatic drive positioner” in “Pre-driving checks and adjustments” for automatic drive positioner operation.

## Forward and backward

Moving the switch forward or backward will slide the seat forward or backward to the desired position.

## Reclining

Move the recline switch backward until the desired angle is obtained. To bring the seatback forward again, move the switch forward and move your body forward. The seatback will move forward.

The reclining feature allows adjustment of the seatback for occupants of different sizes for added comfort and to help obtain proper seat belt fit. See “Precautions on seat belt usage” later in this section. Also, the seatback can be reclined to allow occupants to rest when the vehicle is stopped and the shift selector is in P (Park).

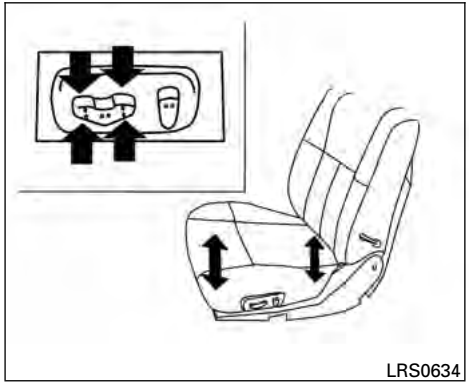


## Seat lifter (if so equipped for driver’s seat)

Push the front or rear end of the switch up or down to adjust the angle and height of the seat cushion.

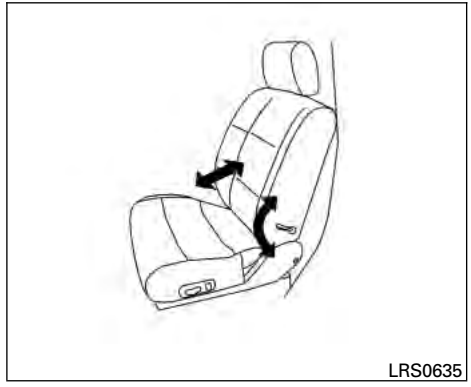


## Lumbar support (driver’s seat)

The lumbar support feature provides lower back support to the driver. Move the lever up or down to adjust the seat lumbar area.

**Type A**

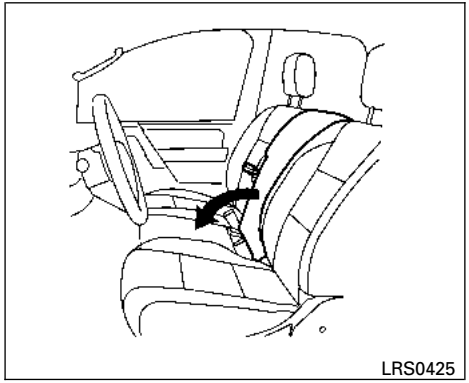


**Type B**

Ⓐ Stowed position

Ⓑ Resting position

## ARMRESTS (if so equipped)

To use the armrests on the captain's chairs (type A, if so equipped), pull them down to the resting position.

To use the center armrest on the bench seat (type B, if so equipped), pull on the tab in the center of the seat and fold it down to the resting position.

## HEAD RESTRAINTS (1st row only)

**⚠WARNING**

**Head restraints supplement the other vehicle safety systems. They may provide additional protection against injury in certain rear end collisions. Adjust the head restraints properly, as specified in this section. Check the adjustment after someone else uses the seat. Do not attach anything to the head restraint stalks or remove the head restraint. Do not use the seat if the head restraint has been removed. If the head restraint was removed, reinstall and properly adjust the head restraint before an occupant uses the seating position. Failure to follow these instructions can reduce the effectiveness of the head restraints. This may increase the risk of serious injury or death in a collision.**

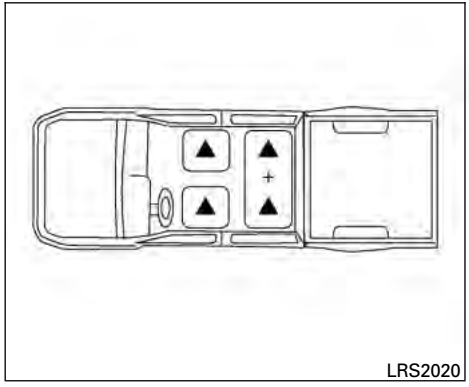


The illustration shows the seating positions equipped with head restraints. The first row head restraints are adjustable.

▲ Indicates the seating position is equipped with a head restraint.

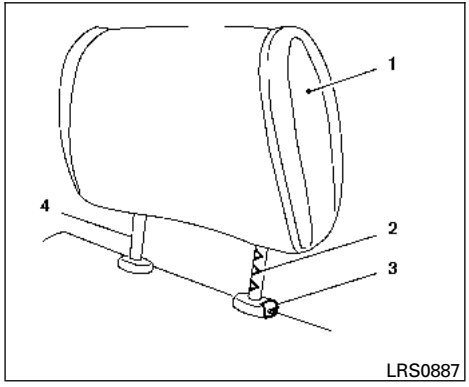


## Components

1. Head restraint
2. Adjustment notches
3. Lock knob
4. Stalks

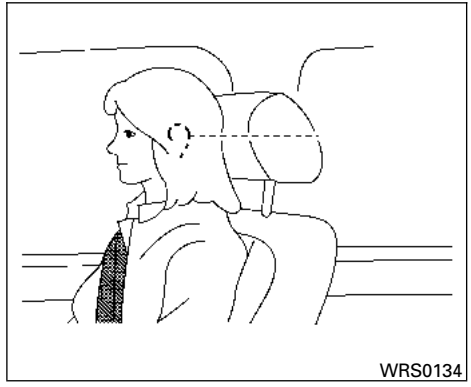


## Adjustment

Adjust the head restraint so the center is level with the center of the seat occupant's ears.

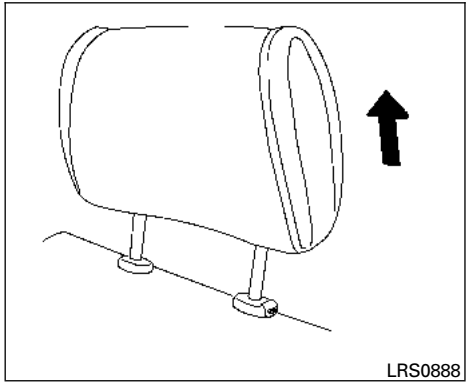


To raise the head restraint, pull it up.

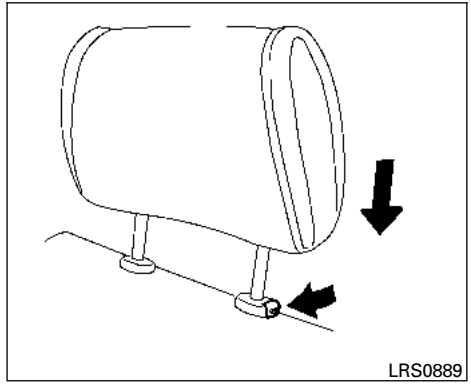


To lower, push and hold the lock knob and push the head restraint down.

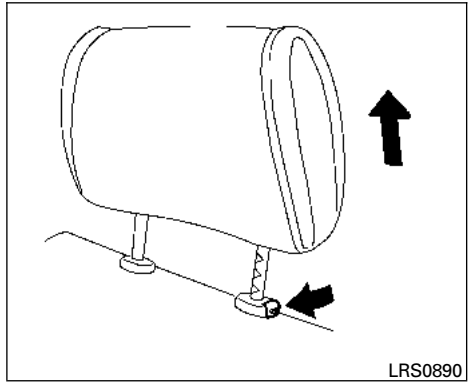


## Removal

Use the following procedure to remove the adjustable head restraints.

1. Pull the head restraint up to the highest position.
2. Push and hold the lock knob.
3. Remove the head restraint from the seat.
4. Store the head restraint properly so it is not loose in the vehicle.
5. Reinstall and properly adjust the head restraint before an occupant uses the seating position.

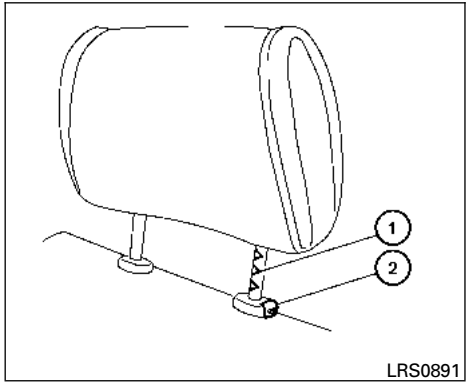


## Install

1. Align the head restraint stalks with the holes in the seat. Make sure the head restraint is facing the correct direction. The stalk with the adjustment notches ① must be installed in the hole with the lock knob ②.
2. Push and hold the lock knob and push the head restraint down.
3. Properly adjust the head restraint before an occupant uses the seating position.

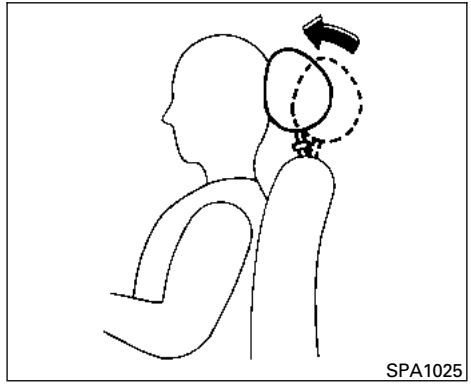


## Front-seat Active Head Restraints

The Active Head Restraint moves forward utilizing the force that the seatback receives from the occupant in a rear-end collision. The movement of the head restraint helps support the occupant's head by reducing its backward movement and helping absorb some of the forces that may lead to whiplash-type injuries.

Active Head Restraints are effective for collisions at low to medium speeds in which it is said that whiplash injury occurs most.

Active Head Restraints operate only in certain rear-end collisions. After the collision, the head restraints return to their original position.

Adjust the Active Head Restraints properly as described in this section.

## HEAD RESTRAINTS (2nd row – outboard positions only)

**⚠ WARNING**

**Head restraints supplement the other vehicle safety systems. They may provide additional protection against injury in certain rear end collisions. Adjust the head restraints properly, as specified in this section. Check the adjustment after someone else uses the seat. Do not attach anything to the head restraint stalks or remove the head restraint. Do not use the seat if the head restraint has been removed. If the head restraint was removed, reinstall and properly adjust the head restraint before an occupant uses the seating position. Failure to follow these instructions can reduce the effectiveness of the head restraints. This may increase the risk of serious injury or death in a collision.**

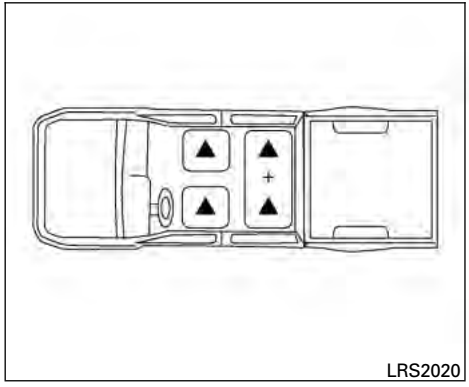


The illustration shows the seating positions equipped with head restraints. The second row head restraints are removable but not adjustable.

▲ Indicates the seating position is equipped with a head restraint.

+ Indicates the seating position is not equipped with a head restraint or adjustable headrest.

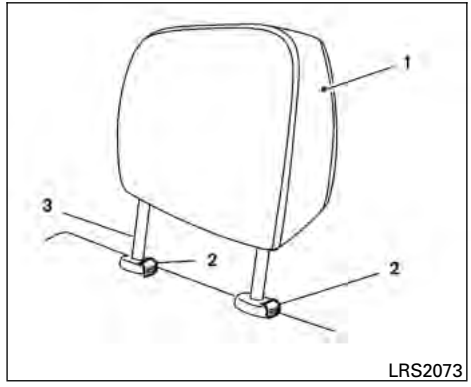


## Components

1. Head restraint
2. Lock knob
3. Stalks

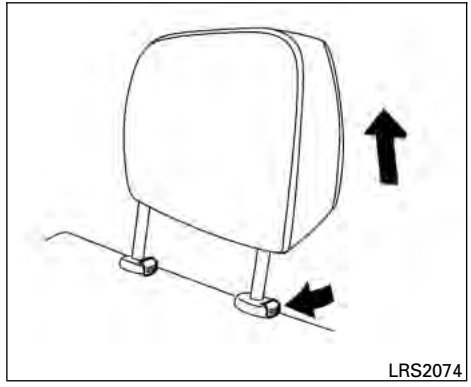


## Removal

Use the following procedure to remove the head restraints.

1. Adjust the seat or seatback as necessary.
2. Push and hold the lock knob(s).
3. Pull the head restraint up until it is removed from the seat.
4. Store the head restraint properly so it is not loose in the vehicle.
5. Reinstall the head restraint and properly adjust the seat or seatback before an occupant uses the seating position.

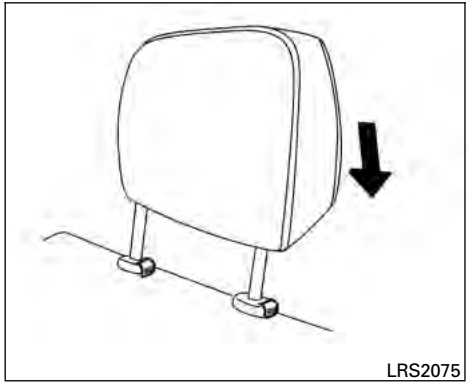


### Install

1. Align the head restraint stalks with the holes in the seat. Make sure the head restraint is facing the correct direction.
2. Push the head restraint down until it locks in place.

## FLEXIBLE SEATING

**WARNING**

- **Never allow anyone to ride in the cargo area or on the rear seats when they are in the fold-down position. In a collision, people riding in these areas without proper restraints are more likely to be seriously injured or killed.**
- **Do not allow people to ride in any area of your vehicle that is not equipped with seats and seat belts. Be sure everyone in your vehicle is in a seat and using a seat belt properly.**
- **Do not fold down the rear seats when occupants are in the rear seat area or any luggage is on the rear seats.**
- **Head restraints should be adjusted properly as they may provide significant protection against injury in an accident. Always replace and adjust them properly if they have been removed for any reason.**
- **If the head restraints are removed for any reason, they should be securely stored to prevent them from causing injury to passengers or damage to the vehicle in case of sudden braking or an accident.**
- **When returning the seatbacks to the upright position, be certain they are completely secured in the latched position. If they are not completely secured, passengers may be injured in an accident or sudden stop.**
- **Properly secure all cargo to help prevent it from sliding or shifting. Do not place cargo higher than the seatbacks. In a sudden stop or collision, unsecured cargo could cause personal injury.**

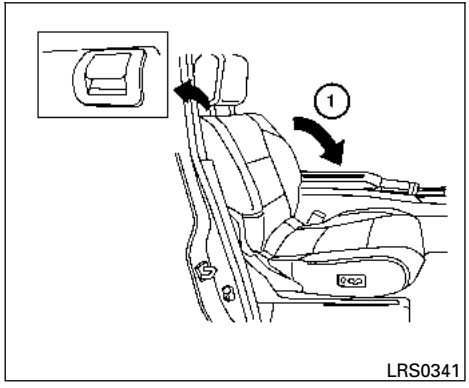


## Folding the front passenger's seatback flat (if so equipped)

To fold the front passenger's seatback flat for extra storage length when transporting long items:

① Slide the seatback to the rear most position. Then lift up on the recline lever, located on the outside of the seat, and fold the seatback forward as far as it will go.

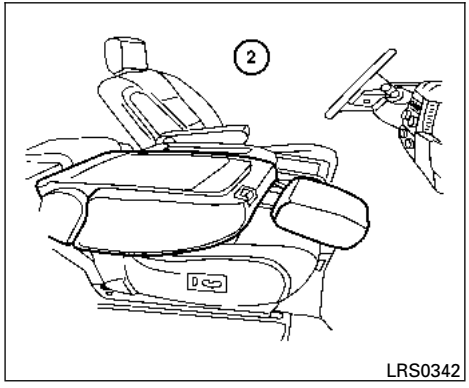


② Lift up on the latch located on the upper corner of the seatback to release the back of the seat. This will enable you to fold the front passenger seatback flat over the seat cushion.

3. To return the front passenger's seat to a seating position, lift up on the seatback and push it up to an upright position. Then pull up on the recline lever and lean the seatback to a proper seating position. Release the lever to lock the seatback in position.

**⚠ WARNING**

- **If you fold the front passenger's seatback flat forward to carry longer objects, be sure this cargo is properly secured and not near an air bag. In a crash, an inflating air bag might force that object toward a person. This could cause severe injury or even death. Secure objects away from the area in which an air bag would inflate. See "Precautions on supplemental restraint system" later in this section.**
- **When returning the seatbacks to the upright position, be certain they are completely secured in the latched position. If they are not completely secured, passengers may be injured in an accident or sudden stop.**

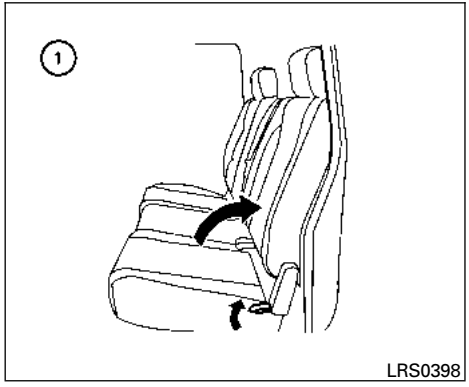


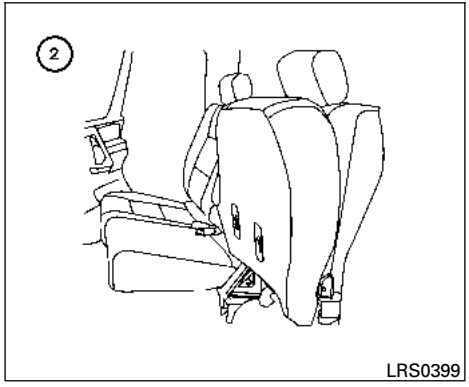


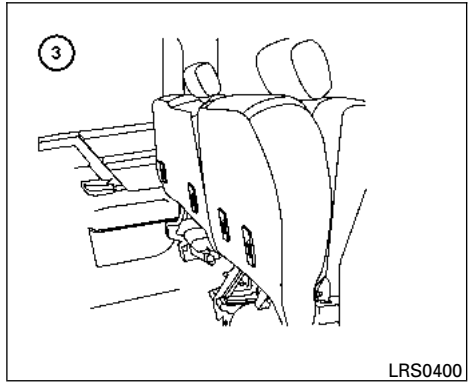


## Folding the rear bench seat

To fold the rear bench seat up for storage capacity behind the front seats or to remove the jacking tools from the storage area:

① Lift up on the lever, located on the side of the seat, while lifting the front of the seat cushion up.

② Fold the bottom of the seat cushion toward the back of the vehicle until it locks in place.

③ Repeat this process to raise and secure the seat cushion on the other side of the vehicle for maximum storage capacity.

To return the rear bench seat to a seating position, reverse the process. **Make sure to properly push the seat cushion down into place.**

**⚠WARNING**

- **When the vehicle is being used to carry cargo, properly secure all cargo to help prevent it from sliding or shifting. Do not place cargo higher than the seatbacks. In a sudden stop or collision, unsecured cargo could cause personal injury.**
- **Do not allow people to ride in any area of your vehicle that is not equipped with seats and seat belts. Be sure everyone in your vehicle is in a seat and using a seat belt properly. Never ride in the rear seat unless the seat bottom cushions are in place and latched.**
- **When returning the seatbacks to the upright position, be certain they are completely secured in the latched position. If they are not completely secured, passengers may be injured in an accident or sudden stop.**

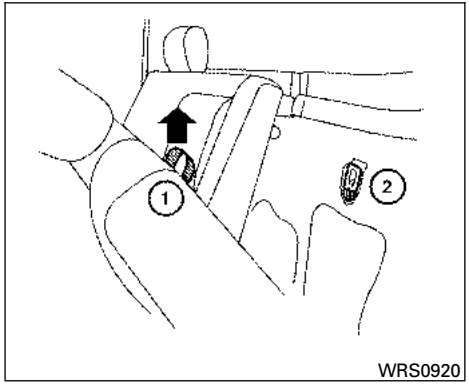


## Folding the rear bench seatback down

The rear bench seatback can be tilted forward to access the child restraint anchor point locations.

To tilt the seatback forward, pull the strap up ① and tilt the seatback. The child restraint anchor points ② can be accessed behind the rear bench seatback.

**⚠WARNING**

**Never allow anyone to ride in the cargo area or on the rear seat when it is in the fold-down position. Use of these areas by passengers without proper restraints could result in serious injury in an accident or sudden stop.**

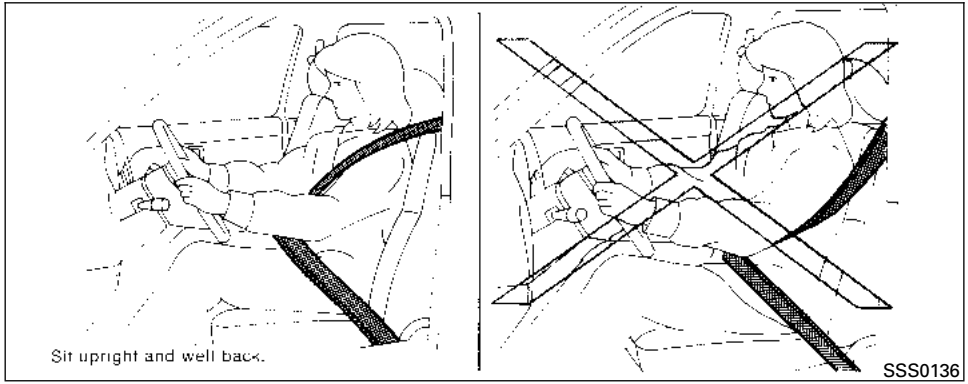


## PRECAUTIONS ON SEAT BELT USAGE

If you are wearing your seat belt properly adjusted and you are sitting upright and well back in your seat with both feet on the floor, your chances of being injured or killed in an accident and/or the severity of injury may be greatly reduced. NISSAN strongly encourages you and all of your passengers to buckle up every time you drive, even if your seating position includes a supplemental air bag.

**Most U.S. states and Canadian provinces or territories specify that seat belts be worn at all times when a vehicle is being driven.**

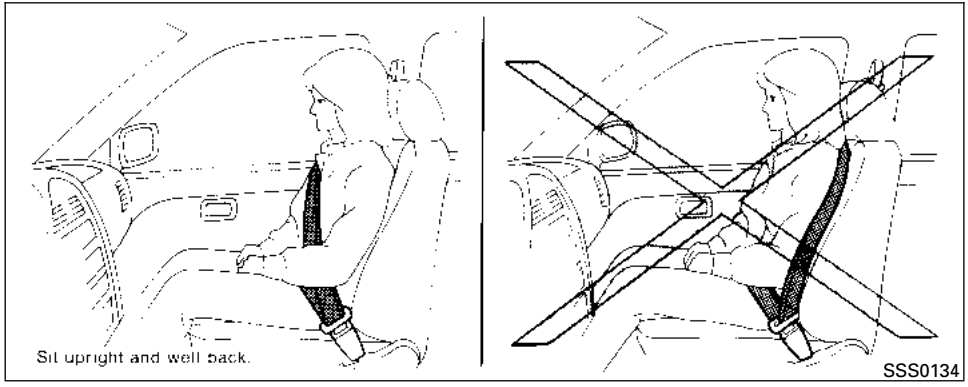


**⚠ WARNING**

- **Every person who drives or rides in this vehicle should use a seat belt at all times. Children should be properly restrained in the rear seat and, if appropriate, in a child restraint.**

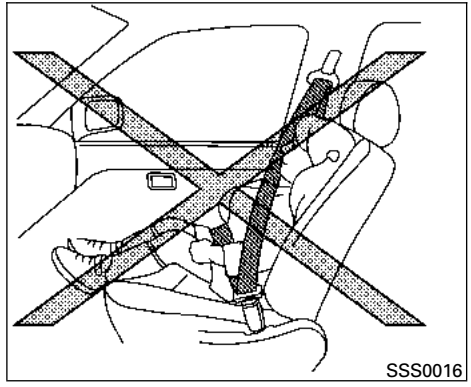


**⚠ WARNING**

- **The seat belt should be properly adjusted to a snug fit. Failure to do so may reduce the effectiveness of the entire restraint system and increase the chance or severity of injury in an accident. Serious injury or death can occur if the seat belt is not worn properly.**

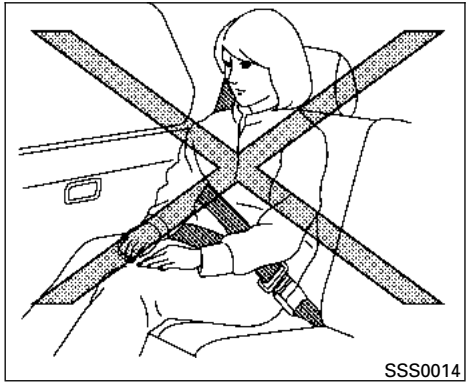


**⚠WARNING**

- **Always route the shoulder belt over your shoulder and across your chest. Never put the belt behind your back, under your arm or across your neck. The belt should be away from your face and neck, but not falling off your shoulder.**
- **Position the lap belt as low and snug as possible AROUND THE HIPS, NOT THE WAIST. A lap belt worn too high could increase the risk of internal injuries in an accident.**
- **Be sure the seat belt tongue is securely fastened to the proper buckle.**
- **Do not wear the seat belt inside out or twisted. Doing so may reduce its effectiveness.**
- **Do not allow more than one person to use the same seat belt.**
- **Never carry more people in the vehicle than there are seat belts.**
- **If the seat belt warning light glows continuously while the ignition is turned ON with all doors closed and all seat belts fastened, it may indicate a malfunction in the system. Have the system checked by a NISSAN dealer.**
- **No changes should be made to the seat belt system. For example, do not modify the seat belt, add material, or install devices that may change the seat belt routing or tension. Doing so may affect the operation of the seat belt system. Modifying or tampering with the seat belt system may result in serious personal injury.**
- **Once a seat belt pretensioner has activated, it cannot be reused and must be replaced together with the retractor. See your NISSAN dealer.**
- **Removal and installation of pretensioner system components should be done by a NISSAN dealer.**
- **All seat belt assemblies, including retractors and attaching hardware, should be inspected after any collision by a NISSAN dealer. NISSAN recommends that all seat belt assemblies in use during a collision be replaced unless the collision was minor and the belts show no damage and continue to operate properly. Seat belt assemblies not in use during a collision should also be inspected and replaced if either damage or improper operation is noted.**
- **All child restraints and attaching hardware should be inspected after any collision. Always follow the restraint manufacturer's inspection instructions and replacement recommendations. The child restraints should be replaced if they are damaged.**

## PREGNANT WOMEN

NISSAN recommends that pregnant women use seat belts. The seat belt should be worn snug and always position the lap belt as low as possible around the hips, not the waist. Place the shoulder belt over your shoulder and across your chest. Never run the lap/shoulder belt over your abdominal area. Contact your doctor for specific recommendations.

## INJURED PERSONS

NISSAN recommends that injured persons use seat belts. Check with your doctor for specific recommendations.

## THREE-POINT TYPE SEAT BELT WITH RETRACTOR

**⚠WARNING**

- **Every person who drives or rides in this vehicle should use a seat belt at all times.**
- **Do not ride in a moving vehicle when the seatback is reclined. This can be dangerous. The shoulder belt will not be against your body. In an accident, you could be thrown into it and receive neck or other serious injuries. You could also slide under the lap belt and receive serious internal injuries.**
- **For the most effective protection when the vehicle is in motion, the seat should be upright. Always sit well back in the seat with both feet on the floor and adjust the seat belt properly.**
- **Do not allow children to play with the seat belts. Most seating positions are equipped with Automatic Locking Retractor (ALR) mode seat belts. If the seat belt becomes wrapped around a child's neck with the ALR mode activated, the child can be seriously injured or killed if the seat belt retracts and becomes tight. This can occur even if the vehicle is parked. Unbuckle the seat belt to release the child. If the seat belt cannot be unbuckled or is already unbuckled, release the child by cutting the seat belt with a suitable tool (such as a knife or scissors) to release the seat belt.**

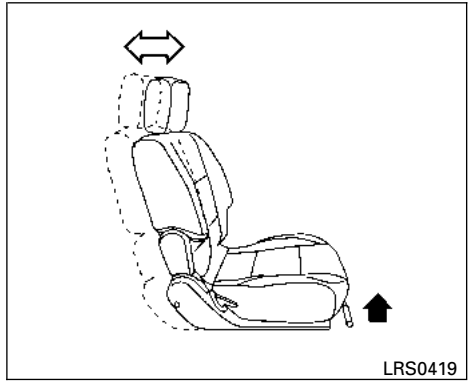


**Manual front seat shown**

### Fastening the seat belts

1. Adjust the seat. See "Seats" earlier in this section.

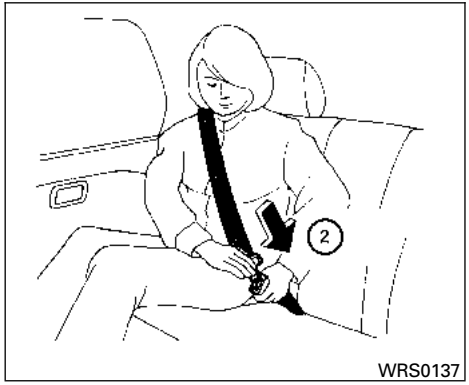


② Slowly pull the seat belt out of the retractor and insert the tongue into the buckle until you hear and feel the latch engage.

- **The retractor is designed to lock during a sudden stop or on impact. A slow pulling motion permits the seat belt to move, and allows you some freedom of movement in the seat.**
- **If the seat belt cannot be pulled from its fully retracted position, firmly pull the belt and release it. Then smoothly pull the belt out of the retractor.**

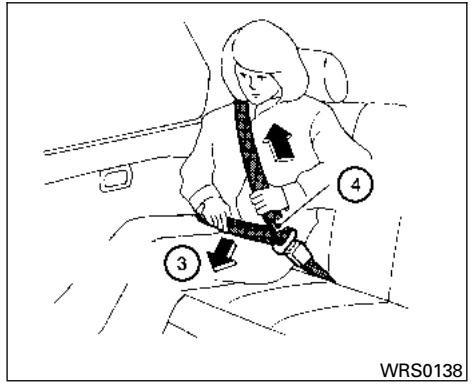


③ Position the lap belt portion **low and snug on the hips** as shown.

④ Pull the shoulder belt portion toward the retractor to take up extra slack. Be sure the shoulder belt is routed over your shoulder and across your chest.

The front passenger seat and the rear seating positions three-point seat belts have two modes of operation:

- Emergency Locking Retractor (ELR)
- Automatic Locking Retractor (ALR)

The Emergency Locking Retractor (ELR) mode allows the seat belt to extend and retract to allow the driver and passengers some freedom of movement in the seat. The ELR locks the seat belt when the vehicle slows down rapidly or during certain impacts.

The Automatic Locking Retractor (ALR) mode (child restraint mode) locks the seat belt for child restraint installation.

When the ALR mode is activated, the seat belt cannot be extended again until the seat belt tongue is detached from the buckle and fully retracted. The seat belt returns to the ELR mode after the seat belt fully retracts. See “Child restraints” later in this section for more information.

**The ALR mode should be used only for child restraint installation. During normal seat belt use by a passenger, the ALR mode should not be activated. If it is activated it may cause uncomfortable seat belt tension. It can also change the operation of the front passenger air bag. See “Front passenger air bag and status light” later in this section.**

**⚠WARNING**

**When fastening the seat belts, be certain that the seatbacks are completely secured in the latched position. If they are not completely secured, passengers may be injured in an accident or sudden stop.**

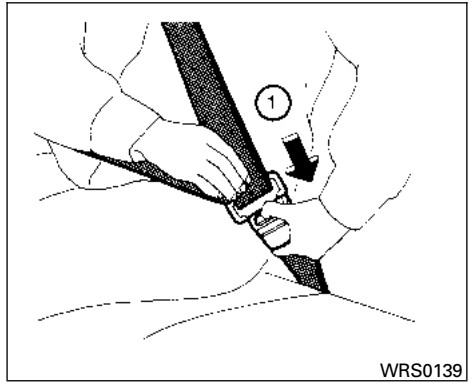


## Unfastening the seat belts

① To unfasten the seat belt, press the button on the buckle. The seat belt automatically retracts.

## Checking seat belt operation

Seat belt retractors are designed to lock seat belt movement by two separate methods:

- When the seat belt is pulled quickly from the retractor.
- When the vehicle slows down rapidly.

To increase your confidence in the seat belts, check the operation as follows:

- Grasp the shoulder belt and pull forward quickly. The retractor should lock and restrict further belt movement.

If the retractor does not lock during this check or if you have any questions about seat belt operation, see a NISSAN dealer.

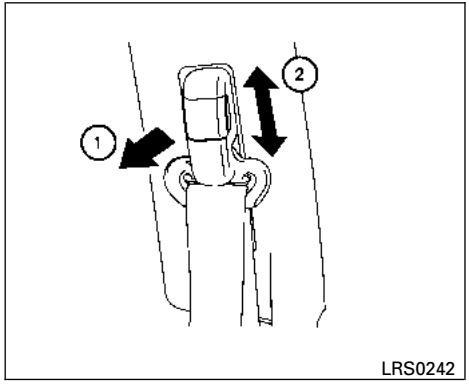


**Front seats**

## Shoulder belt height adjustment (front outboard seats)

The shoulder belt anchor height should be adjusted to the position best for you. (See “Precautions on seat belt usage” earlier in this section.) To adjust, pull out ① the adjustment button and move the shoulder belt anchor ② to the desired position, so the belt passes over the center of the shoulder. The belt should be away from your face and neck, but not falling off your shoulder. Release the adjustment button to lock the shoulder belt anchor into position.

**⚠WARNING**

- **After adjustment, release the adjustment button and try to move the shoulder belt anchor up and down to make sure it is securely fixed in position.**
- **The shoulder belt anchor height should be adjusted to the position best for you. Failure to do so may reduce the effectiveness of the entire restraint system and increase the chance or severity of injury in an accident.**

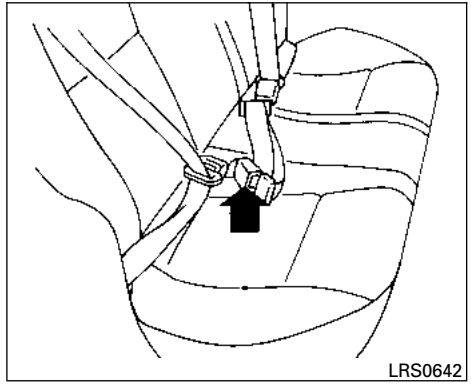


## TWO-POINT TYPE SEAT BELT WITHOUT RETRACTOR (center of the front bench seat) (if so equipped)

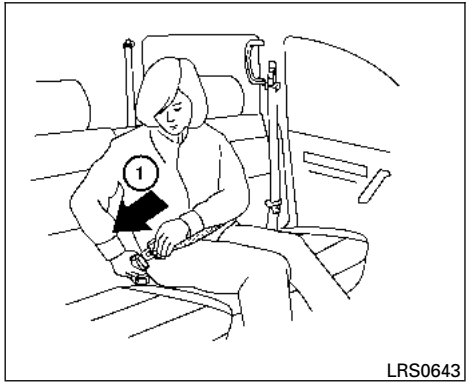


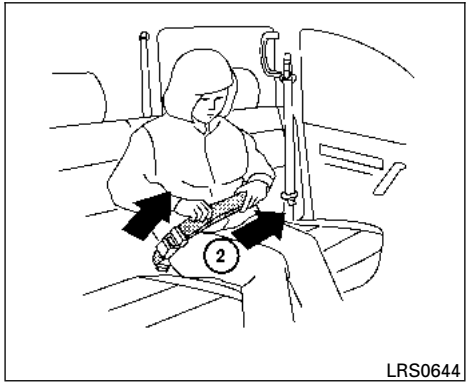


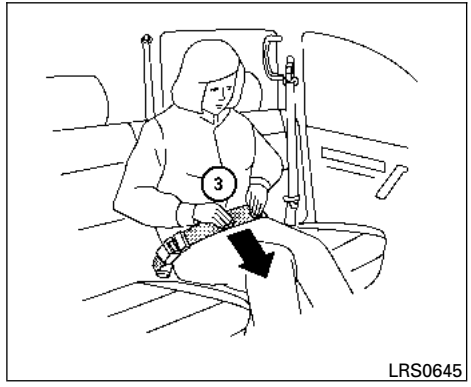


## Fastening the seat belts

① Insert the tongue into the buckle until you hear and feel the latch engage.

② Tighten the belt by pulling the free end of the belt away from the tongue.

③ Position the lap belt **low and snug on the hips** as illustrated.

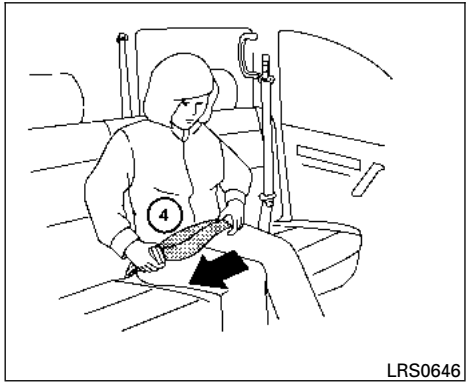


④ Loosen the belt by holding the tongue at a right angle to the belt, then pull on the belt.

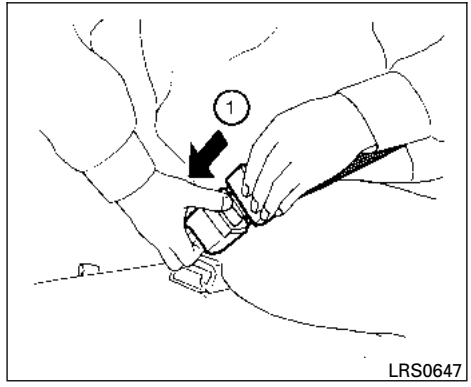


## Unfastening the seat belts

① To unfasten the seat belt, press the button on the buckle.

## SEAT BELT EXTENDERS

If, because of body size or driving position, it is not possible to properly fit the lap/shoulder belt and fasten it, an extender that is compatible with the installed seat belts is available that can be purchased. The extender adds approximately 8 in (200 mm) of length and may be used for either the driver or front passenger seating position. See a NISSAN dealer for assistance with purchasing an extender if an extender is required.

**⚠ WARNING**

- **Only NISSAN seat belt extenders, made by the same company which made the original equipment seat belts, should be used with NISSAN seat belts.**
- **Adults and children who can use the standard seat belt should not use an extender. Such unnecessary use could result in serious personal injury in the event of an accident.**
- **Never use seat belt extenders to install child restraints. If the child restraint is not secured properly, the child could be seriously injured in a collision or a sudden stop.**

## SEAT BELT MAINTENANCE

- **To clean the seat belt webbing,** apply a mild soap solution or any solution recommended for cleaning upholstery or carpet. Then wipe with a cloth and allow the seat belts to dry in the shade. Do not allow the seat belts to retract until they are completely dry.
- **If dirt builds up in the shoulder belt guide** of the seat belt anchors, the seat belts may retract slowly. Wipe the shoulder belt guide with a clean, dry cloth.

- **Periodically check to see that the seat belt and the metal components,** such as buckles, tongues, retractors, flexible wires and anchors, work properly. If loose parts, deterioration, cuts or other damage on the webbing is found, the entire seat belt assembly should be replaced.

**WARNING**

**Do not allow children to play with the seat belts. Most seating positions are equipped with Automatic Locking Retractor (ALR) mode seat belts. If the seat belt becomes wrapped around a child's neck with the ALR mode activated, the child can be seriously injured or killed if the seat belt retracts and becomes tight. This can occur even if the vehicle is parked. Unbuckle the seat belt to release the child. If the seat belt cannot be unbuckled or is already unbuckled, release the child by cutting the seat belt with a suitable tool (such as a knife or scissors) to release the seat belt.**

**Children need adults to help protect them. They need to be properly restrained.**

In addition to the general information in this manual, child safety information is available from many other sources, including doctors, teachers, government traffic safety offices, and community organizations. Every child is different, so be sure to learn the best way to transport your child.

There are three basic types of child restraint systems:

- Rear-facing child restraint
- Forward-facing child restraint
- Booster seat

The proper restraint depends on the child's size. Generally, infants up to about 1 year and less than 20 lbs (9 kg) should be placed in rear-facing child restraints. Forward-facing child restraints are available for children who outgrow rear-facing child restraints and are at least 1 year old. Booster seats are used to help position a vehicle lap/shoulder belt on a child who can no longer use a forward-facing child restraint.

**WARNING**

**Infants and children need special protection. The vehicle's seat belts may not fit them properly. The shoulder belt may come too close to the face or neck. The lap belt may not fit over their small hip bones. In an accident, an improperly fitting seat belt could cause serious or fatal injury. Always use appropriate child restraints.**

All U.S. states and Canadian provinces or territories require the use of approved child restraints for infants and small children. See "Child restraints" later in this section.

A child restraint may be secured in the vehicle by using either the LATCH (Lower Anchor and Tethers for CHildren) system or with the vehicle seat belt. See “Child restraints” later in this section for more information.

**NISSAN recommends that all pre-teens and children be restrained in the rear seat. Studies show that children are safer when properly restrained in the rear seat than in the front seat.**

**This is especially important because your vehicle has a supplemental restraint system (air bag system) for the front passenger. See “Supplemental restraint system” later in this section.**

## INFANTS

Infants up to at least 1 year old should be placed in a rear-facing child restraint. NISSAN recommends that infants be placed in child restraints that comply with Federal Motor Vehicle Safety Standards or Canadian Motor Vehicle Safety Standards. You should choose a child restraint that fits your vehicle and always follow the manufacturer’s instructions for installation and use.

## SMALL CHILDREN

Children that are over 1 year old and weigh at least 20 lbs (9 kg) should remain in a rear-facing child restraint as long as possible up to the height or weight limit of the child restraint. Children who outgrow the height or weight limit of the rear-facing child restraint and are at least 1 year old should be secured in a forward-facing child restraint with a harness. Refer to the manufacturer’s instructions for minimum and maximum weight and height recommendations. NISSAN recommends that small children be placed in child restraints that comply with Federal Motor Vehicle Safety Standards or Canadian Motor Vehicle Safety Standards. You should choose a child restraint that fits your vehicle and always follow the manufacturer’s instructions for installation and use.

## LARGER CHILDREN

Children should remain in a forward-facing child restraint with a harness until they reach the maximum height or weight limit allowed by the child restraint manufacturer.

Once a child outgrows the height or weight limit of the harness-equipped forward-facing child restraint, NISSAN recommends that the child be placed in a commercially available booster seat to obtain proper seat belt fit. For a seat belt to fit properly, the booster seat should raise the child so that the shoulder belt is properly positioned across the chest and the top, middle portion of the shoulder. The shoulder belt should not cross the neck or face and should not fall off the shoulder. The lap belt should lie snugly across the lower hips or upper thighs, not the abdomen. A booster seat can only be used in seating positions that have a three-point type seat belt. The booster seat should fit the vehicle seat and have a label certifying that it complies with Federal Motor Vehicle Safety Standards or Canadian Motor Vehicle Safety Standards. Once the child has grown so the shoulder belt is no longer on or near the face and neck and the lap belt can be positioned properly across the lower hips or upper thighs use the seat belt without the booster seat.

**⚠ WARNING**

**Never let a child stand or kneel on any seat and do not allow a child in the cargo area. The child could be seriously injured or killed in a sudden stop or collision.**

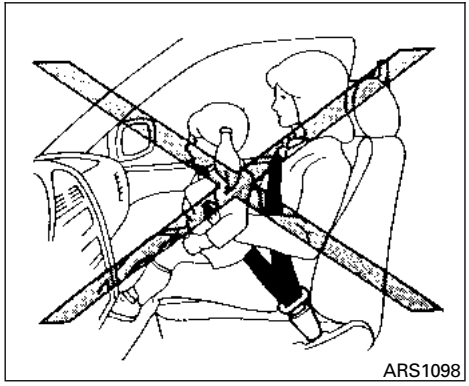


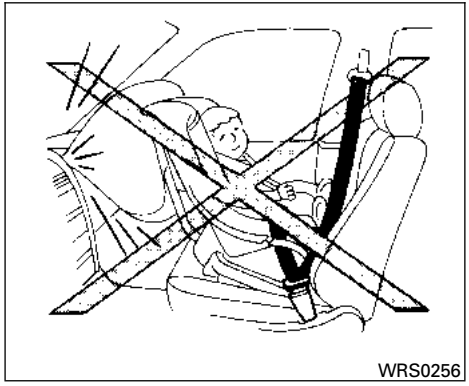


## PRECAUTIONS ON CHILD RESTRAINTS

**WARNING**

- **Failure to follow the warnings and instructions for proper use and installation of child restraints could result in serious injury or death of a child or other passengers in a sudden stop or collision:**
  - **The child restraint must be used and installed properly. Always follow all of the child restraint manufacturer's instructions for installation and use.**
  - **Infants and children should never be held on anyone's lap. Even the strongest adult cannot resist the forces of a collision.**
  - **Do not put a seat belt around both a child and another passenger.**
  - **NISSAN recommends that all child restraints be installed in the rear seat. Studies show that children are safer when properly restrained in the rear seat than in the front seat. If you must install a forward-facing child restraint in the front seat, see "Forward-facing child restraint installation using the seat belts" later in this section.**
  - **Even with the NISSAN Advanced Air Bag System, never install a rear-facing child restraint in the front seat. An inflating air bag could seriously injure or kill a child. A rear-facing child restraint must only be used in the rear seat.**
  - **Be sure to purchase a child restraint that will fit the child and vehicle. Some child restraints may not fit properly in your vehicle.**

- **Child restraint anchor points are designed to withstand loads from child restraints that are properly fitted.**
- **Never use the anchor points for adult seat belts or harnesses.**
- **A child restraint with a top tether strap should not be used in the front passenger seat.**
- **Keep seatbacks as upright as possible after fitting the child restraint.**
- **Infants and children should always be placed in an appropriate child restraint while in the vehicle.**

- **When the child restraint is not in use, keep it secured with the LATCH system or a seat belt. In a sudden stop or collision, loose objects can injure occupants or damage the vehicle.**

**⚠ CAUTION**

**A child restraint in a closed vehicle can become very hot. Check the seating surface and buckles before placing a child in the child restraint.**

This vehicle is equipped with a universal child restraint anchor system, referred to as the LATCH (Lower Anchors and Tethers for CHildren) system. Some child restraints include rigid or webbing-mounted attachments that can be connected to these anchors. For details, see "LATCH (Lower Anchors and Tethers for CHildren) system" later in this section.

If you do not have a LATCH compatible child restraint, the vehicle seat belts can be used.

Several manufacturers offer child restraints for infants and children of various sizes. When selecting any child restraint, keep the following points in mind:

- Choose only a restraint with a label certifying that it complies with Federal Motor Vehicle Safety Standard 213 or Canadian Motor Vehicle Safety Standard 213.
- Check the child restraint in your vehicle to be sure it is compatible with the vehicle's seat and seat belt system.
- If the child restraint is compatible with your vehicle, place your child in the child restraint and check the various adjustments to be sure the child restraint is compatible with your child. Choose a child restraint that is designed for your child's height and weight. Always follow all recommended procedures.

**All U.S. states and Canadian provinces or territories require that infants and small children be restrained in an approved child restraint at all times while the vehicle is being operated. Canadian law requires the top tether strap on forward-facing child restraints be secured to the designated anchor point on the vehicle.**

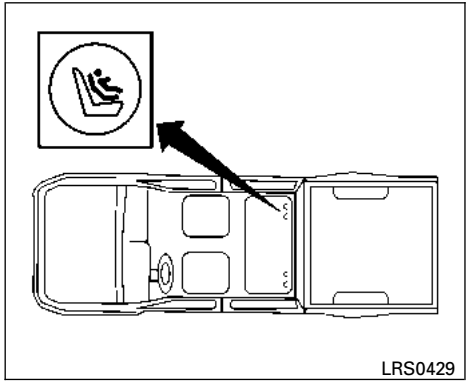


**LATCH system lower anchor locations**

## LATCH (Lower Anchors and Tethers for CHildren) SYSTEM

Your vehicle is equipped with special anchor points that are used with LATCH (Lower Anchors and Tethers for CHildren) system compatible child restraints. This system may also be referred to as the ISOFIX or ISOFIX compatible system. With this system, you do not have to use a vehicle seat belt to secure the child restraint.

## LATCH lower anchor

**WARNING**

**Failure to follow the warnings and instructions for proper use and installation of child restraints could result in serious injury or death of a child or other passengers in a sudden stop or collision:**

- **Attach LATCH system compatible child restraints only at the locations shown in the illustration.**
- **Do not secure a child restraint in the center rear seating position using the LATCH lower anchors. The child restraint will not be secured properly.**
- **Inspect the lower anchors by inserting your fingers into the lower anchor area. Feel to make sure there are no obstructions over the anchors such as seat belt webbing or seat cushion material. The child restraint will not be secured properly if the lower anchors are obstructed.**

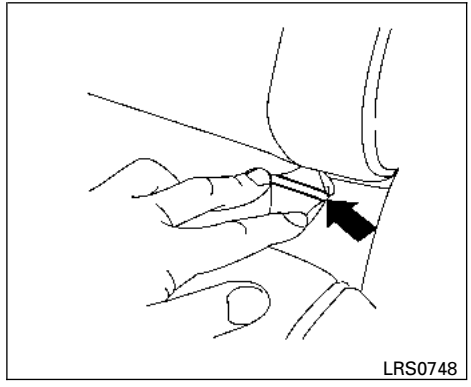


**LATCH lower anchor location**

## LATCH lower anchor location

The LATCH lower anchors are located at the rear of the seat cushion near the seatback. A label is attached to the seatback to help you locate the LATCH lower anchors.

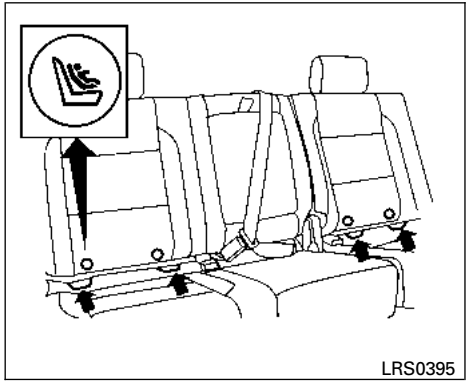


**LATCH lower anchor point locations**

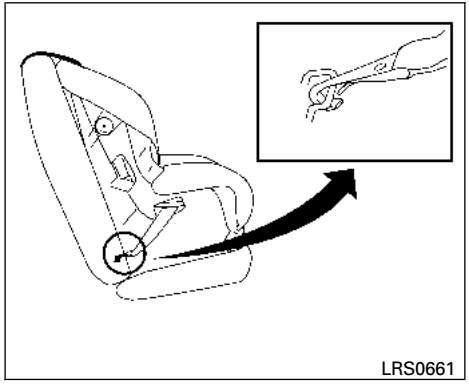


**LATCH webbing-mounted attachment**

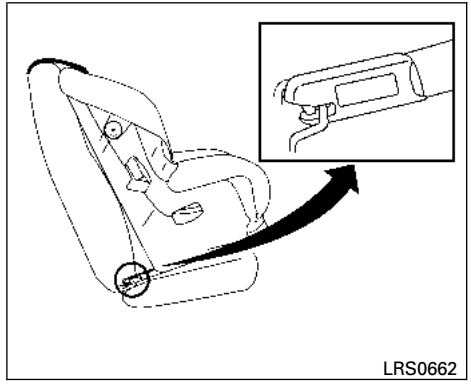


**LATCH rigid-mounted attachment**

## Installing child restraint LATCH lower anchor attachments

LATCH compatible child restraints include two rigid or webbing-mounted attachments that can be connected to two anchors located at certain seating positions in your vehicle. With this system, you do not have to use a vehicle seat belt to secure the child restraint. Check your child restraint for a label stating that it is compatible with LATCH. This information may also be in the instructions provided by the child restraint manufacturer.

When installing a child restraint, carefully read and follow the instructions in this manual and those supplied with the child restraint.

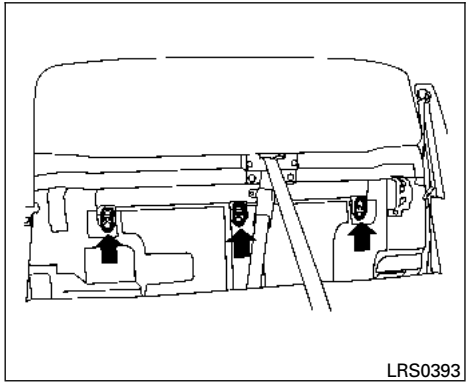


Top tether anchor point locations

Anchor points are located under the rear window behind the rear bench seat.

## REAR-FACING CHILD RESTRAINT INSTALLATION USING LATCH

Refer to all Warnings and Cautions in the “Child Safety” and “Child Restraints” sections before installing a child restraint.

Follow these steps to install a rear-facing child restraint in the 2nd row seats using the LATCH system:

1. Position the child restraint on the seat. Always follow the child restraint manufacturer’s instructions.

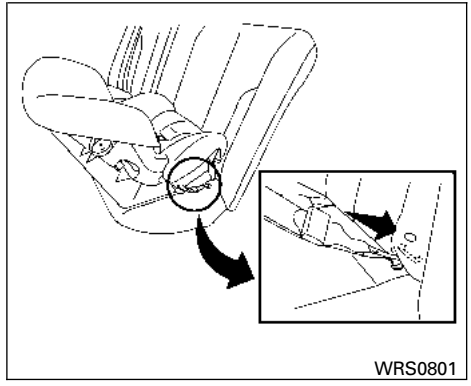


**Rear-facing web-mounted – step 2**

2. Secure the child restraint anchor attachments to the LATCH lower anchors. Check to make sure the LATCH attachment is properly attached to the lower anchors.

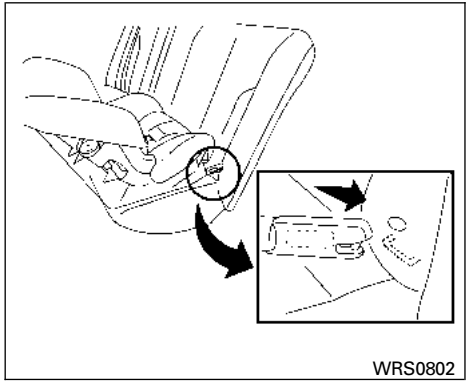


**Rear-facing rigid-mounted – step 2**

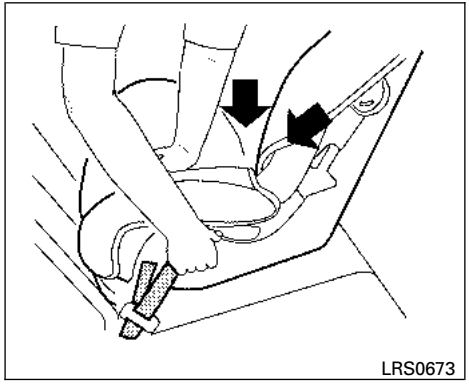


**Rear-facing – step 3**

3. For child restraints that are equipped with webbing-mounted attachments, remove any additional slack from the anchor attachments. Press downward and rearward firmly in the center of the child restraint with your hand to compress the vehicle seat cushion and seatback while tightening the webbing of the anchor attachments.

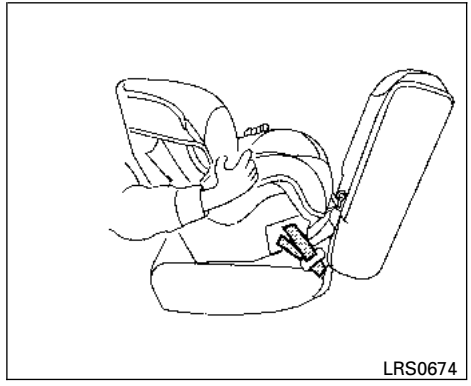


**Rear-facing – step 4**

4. After attaching the child restraint, test it before you place the child in it. Push it from side to side while holding the child restraint near the LATCH attachment path. The child restraint should not move more than 1 inch (25 mm), from side to side. Try to tug it forward and check to see if the LATCH attachment holds the restraint in place. If the restraint is not secure, tighten the LATCH attachment as necessary, or put the restraint in another seat and test it again. You may need to try a different child restraint or try installing by using the vehicle seat belt (if applicable). Not all child restraints fit in all types of vehicles.

5. Check to make sure the child restraint is properly secured prior to each use. If the child restraint is loose, repeat steps 2 through 4.

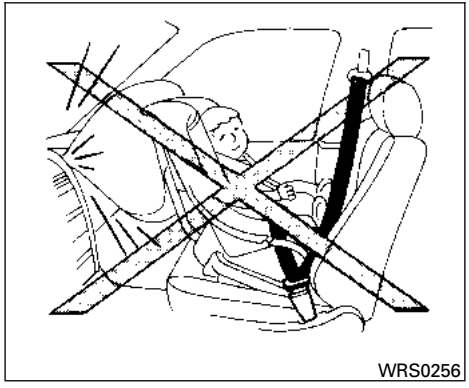


REAR-FACING CHILD RESTRAINT INSTALLATION USING THE SEAT BELTS

**⚠ WARNING**

**The three-point seat belt with Automatic Locking Retractor (ALR) must be used when installing a child restraint. Failure to use the ALR mode will result in the child restraint not being properly secured. The restraint could tip over or be loose and cause injury to a child in a sudden stop or collision. Also, it can change the operation of the front passenger air bag. See "Front passenger air bag and status light" later in this section.**

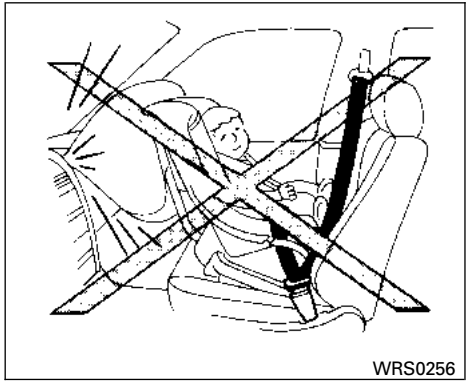


**Rear-facing – step 1**

Refer to all Warnings and Cautions in the “Child safety” and “Child restraints” sections before installing a child restraint.

Follow these steps to install a rear-facing child restraint using the vehicle seat belts in the rear seats:

1. **Child restraints for infants must be used in the rear-facing direction and therefore must not be used in the front seat.** Position the child restraint on the seat. Always follow the restraint manufacturer’s instructions.

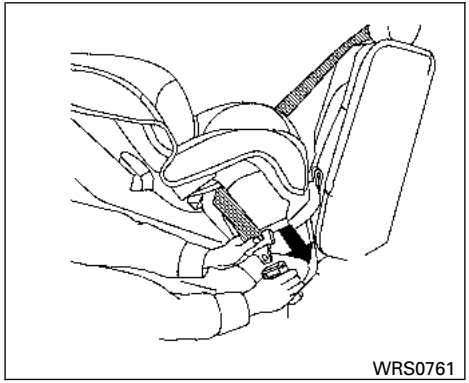


**Rear-facing – step 2**

2. Route the seat belt tongue through the child restraint and insert it into the buckle until you hear and feel the latch engage. Be sure to follow the child restraint manufacturer’s instructions for belt routing.

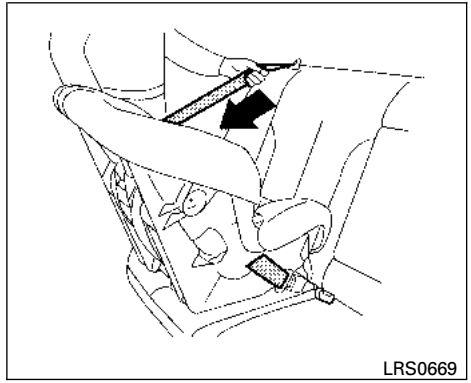


**Rear-facing – step 3**

3. Pull the shoulder belt until the belt is fully extended. At this time, the seat belt retractor is in the Automatic Locking Retractor (ALR) mode (child restraint mode). It reverts to the Emergency Locking Retractor (ELR) mode when the seat belt is fully retracted.

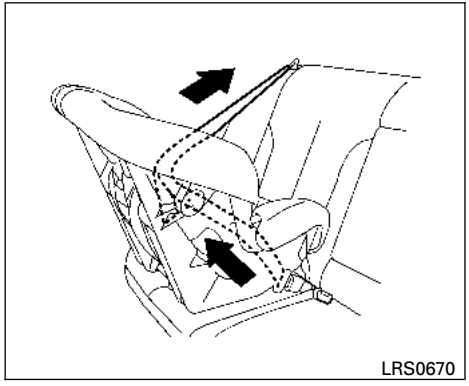


**Rear-facing – step 4**

4. Allow the seat belt to retract. Pull up on the shoulder belt to remove any slack in the belt.

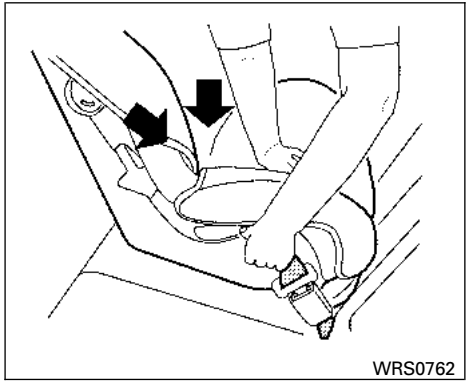


**Rear-facing – step 5**

5. Remove any additional slack from the seat belt; press downward and rearward firmly in the center of the child restraint to compress the vehicle seat cushion and seatback while pulling up on the seat belt.

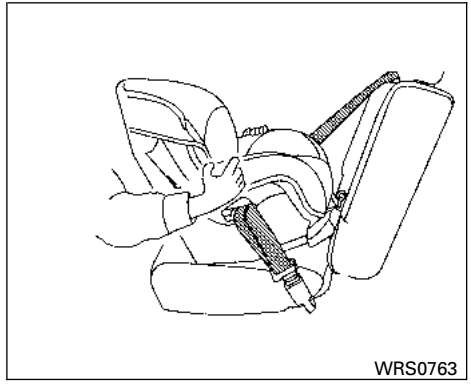


**Rear-facing – step 6**

6. After attaching the child restraint, test it before you place the child in it. Push it from side to side while holding the child restraint near the seat belt path. The child restraint should not move more than 1 inch (25 mm), from side to side. Try to tug it forward and check to see if the belt holds the restraint in place. If the restraint is not secure, tighten the seat belt as necessary, or put the restraint in another seat and test it again. You may need to try a different child restraint. Not all child restraints fit in all types of vehicles.

7. Check to make sure that the child restraint is properly secured prior to each use. If the seat belt is not locked, repeat steps 1 through 6.

After the child restraint is removed and the seat belt fully retracted, the ALR mode (child restraint mode) is canceled.

## FORWARD-FACING CHILD RESTRAINT INSTALLATION USING LATCH

Refer to all Warnings and Cautions in the “Child Safety” and “Child Restraints” sections before installing a child restraint.

Follow these steps to install a forward-facing child restraint in the 2nd row seats using the LATCH system:

1. Position the child restraint on the seat. Always follow the child restraint manufacturer’s instructions.

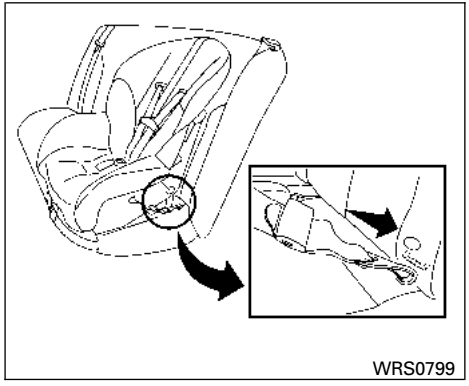


**Forward-facing web-mounted – step 2**

2. Secure the child restraint anchor attachments to the LATCH lower anchors. Check to make sure the LATCH attachment is properly attached to the lower anchors.

   If the child restraint is equipped with a top tether strap, route the top tether strap and secure the tether strap to the tether anchor point. See “Installing top tether strap” in this section. Do not install child restraints that require the use of a top tether strap in seating positions that do not have a top tether anchor.

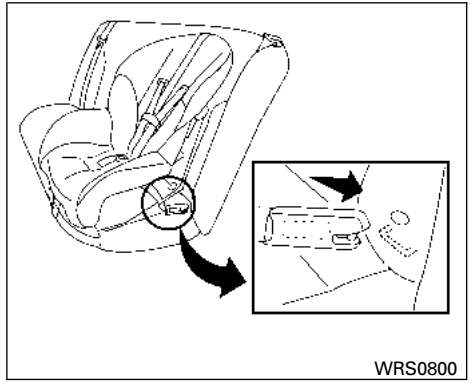


**Forward-facing rigid-mounted – step 2**

3. The back of the child restraint should be secured against the vehicle seatback.

   If necessary, adjust or remove the head restraint to obtain the correct child restraint fit. If the head restraint is removed, store it in a secure place. **Be sure to reinstall the head restraint when the child restraint is removed.** See “Head restraints” in this section for head restraint adjustment information.

   If the seating position does not have an adjustable head restraint and it is interfering with the proper child restraint fit, try another seating position or a different child restraint.

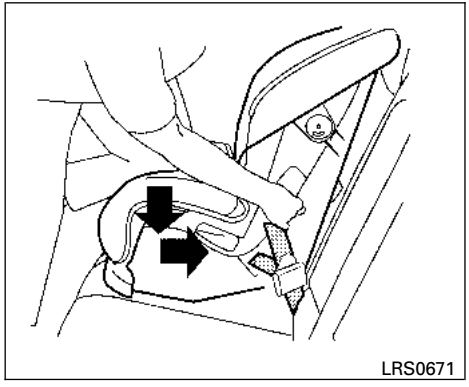


**Forward-facing – step 4**

4. For child restraints that are equipped with webbing-mounted attachments, remove any additional slack from the anchor attachments. Press downward and rearward firmly in the center of the child restraint with your knee to compress the vehicle seat cushion and seatback while tightening the webbing of the anchor attachments.
5. Tighten the tether strap according to the manufacturer's instructions to remove any slack.

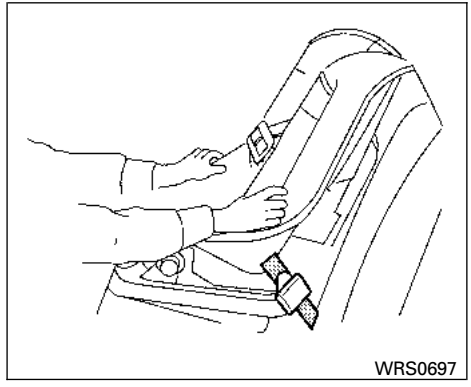


**Forward-facing – step 6**

6. After attaching the child restraint, test it before you place the child in it. Push it from side to side while holding the child restraint near the LATCH attachment path. The child restraint should not move more than 1 inch (25 mm), from side to side. Try to tug it forward and check to see if the LATCH attachment holds the restraint in place. If the restraint is not secure, tighten the LATCH attachment as necessary, or put the restraint in another seat and test it again. You may need to try a different child restraint. Not all child restraints fit in all types of vehicles.
7. Check to make sure the child restraint is properly secured prior to each use. If the child restraint is loose, repeat steps 3 through 6.

## FORWARD-FACING CHILD RESTRAINT INSTALLATION USING THE SEAT BELTS — FRONT PASSENGER AND REAR BENCH SEAT

**⚠ WARNING**

**The three-point seat belt with Automatic Locking Retractor (ALR) must be used when installing a child restraint. Failure to use the ALR mode will result in the child restraint not being properly secured. The restraint could tip over or be loose and cause injury to a child in a sudden stop or collision. Also, it can change the operation of the front passenger air bag. See "Front passenger air bag and status light" later in this section.**

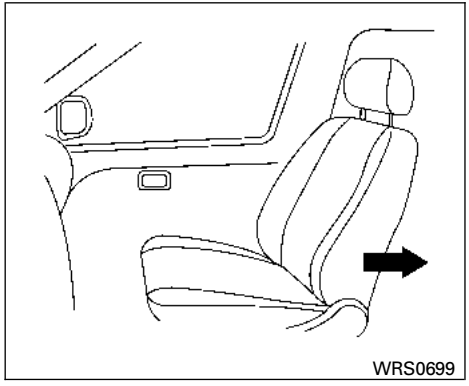


**Forward-facing (front passenger seat) – step 1**

Refer to all Warnings and Cautions in the “Child Safety” and “Child Restraints” sections before installing a child restraint.

Follow these steps to install a forward-facing child restraint using the vehicle seat belt in the rear seats or in the front passenger seat:

1. **If you must install a child restraint in the front seat, it should be placed in a forward-facing direction only. Move the seat to the rearmost position. Child restraints for infants must be used in the rear-facing direction and therefore must not be used in the front seat.**

2. Position the child restraint on the seat. Always follow the child restraint manufacturer’s instructions.

   The back of the child restraint should be secured against the vehicle seatback.

   If necessary, adjust or remove the head restraint to obtain the correct child restraint fit. If the head restraint is removed, store it in a secure place. **Be sure to reinstall the head restraint when the child restraint is removed.** See “Head restraints” in this section for head restraint adjustment, removal and installation information.

   If the seating position does not have an adjustable head restraint and it is interfering with the proper child restraint fit, try another seating position or a different child restraint.

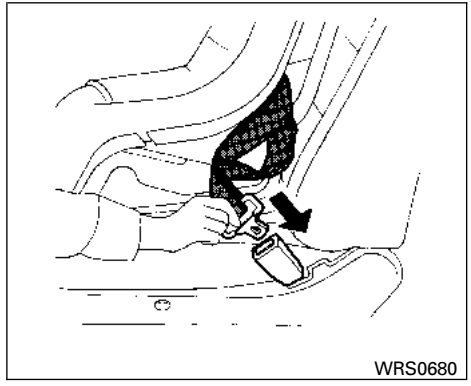


**Forward-facing – step 3**

3. Route the seat belt tongue through the child restraint and insert it into the buckle until you hear and feel the latch engage. Be sure to follow the child restraint manufacturer’s instructions for belt routing.

   If the child restraint is equipped with a top tether strap, route the top tether strap and secure the tether strap to the tether anchor point (rear seat installation only). See “Installing top tether strap” in this section. Do not install child restraints that require the use of a top tether strap in seating positions that do not have a top tether anchor.

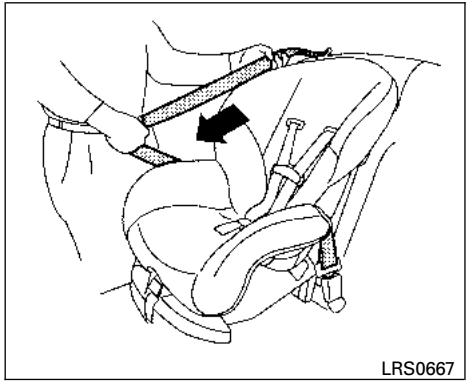


**Forward-facing – step 4**

4. Pull the shoulder belt until the belt is fully extended. At this time, the seat belt retractor is in the Automatic Locking Retractor (ALR) mode (child restraint mode). It reverts to Emergency Locking Retractor (ELR) mode when the seat belt is fully retracted.

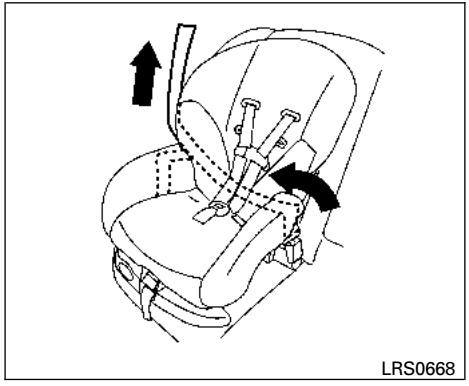


**Forward-facing – step 5**

5. Allow the seat belt to retract. Pull up on the shoulder belt to remove any slack in the belt.

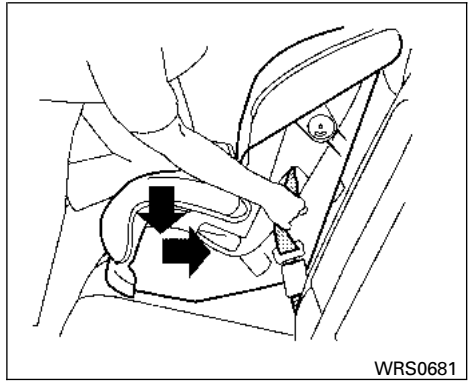


**Forward-facing – step 6**

6. Remove any additional slack from the seat belt; press downward and rearward firmly in the center of the child restraint with your knee to compress the vehicle seat cushion and seatback while pulling up on the seat belt.
7. Tighten the tether strap according to the manufacturer's instructions to remove any slack.

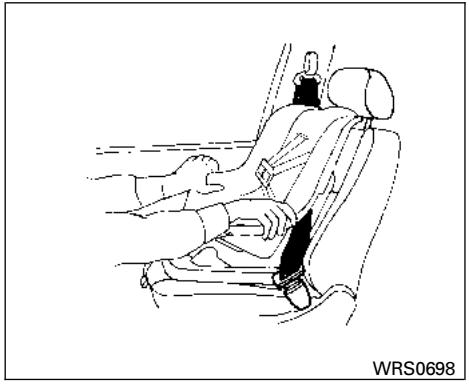


**Forward-facing – step 8**

8. After attaching the child restraint, test it before you place the child in it. Push it from side to side while holding the child restraint near the seat belt path. The child restraint should not move more than 1 inch (25 mm), from side to side. Try to tug it forward and check to see if the seat belt holds the restraint in place. If the restraint is not secure, tighten the seat belt as necessary, or put the restraint in another seat and test it again. You may need to try a different child restraint. Not all child restraints fit in all types of vehicles.

9. Check to make sure the child restraint is properly secured prior to each use. If the seat belt is not locked, repeat steps 3 through 8.

**Forward-facing – step 10**

10. If the child restraint is installed in the front passenger seat, place the ignition switch in the ON position. The front passenger air bag status light should illuminate. If this light is not illuminated see "Front passenger air bag and status light" in this section. **Move the child restraint to another seating position.** Have the system checked by a NISSAN dealer.

After the child restraint is removed and the seat belt is fully retracted, the ALR mode (child restraint mode) is canceled.

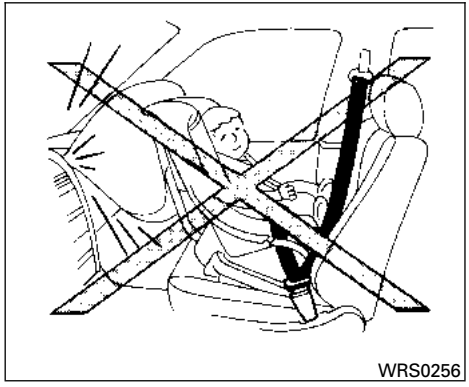


## FORWARD-FACING CHILD RESTRAINT INSTALLATION USING THE SEAT BELTS — FRONT BENCH CENTER POSITION

**⚠WARNING**

- **Never install a rear-facing child restraint in the front passenger seat. Front air bags inflate with great force. A rear-facing child restraint could be struck by the front air bag in a crash and could seriously injure or kill your child.**
- **NISSAN recommends that child restraints be installed in the rear seat. However, if you must install a forward facing child restraint in the front center bench seat, follow these instructions carefully.**
- **A child restraint with a top tether strap should not be used in the front passenger seat.**

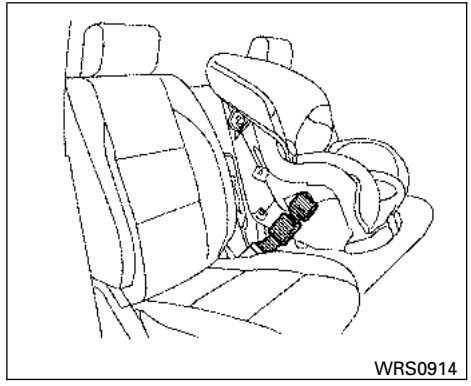


**Foward-Facing — step 1**

Refer to all Warnings and Cautions in the “Child Safety” and “Child Restraints” sections before installing a child restraint.

Follow these steps to install a child restraint in the front center bench seat:

1. **If you must install a child restraint in the front seat, it should be placed in a forward-facing direction only. Move the seat to the rearmost position. Child restraints for infants must be used in the rear-facing direction and therefore must not be used in the front seat.**

2. Position the child restraint on the seat. Always follow the child restraint manufacturer's instructions.

   The back of the child restraint should be secured against the vehicle seat back. If necessary, adjust or remove the head restraint to obtain the correct child restraint fit. See "Head restraints" earlier in this section. If the head restraint is removed, store it in a secure place. Be sure to install the head restraint when the child restraint is removed. If the seating position does not have an adjustable head restraint and it is interfering with the proper child restraint fit, try another seating position or a different child restraint.

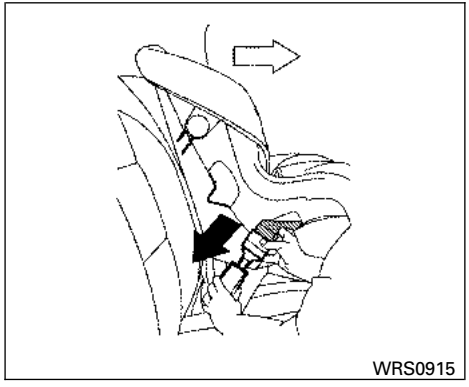


**Forward-Facing — step 3**

3. Route the seat belt tongue through the child restraint and insert it into the buckle until you hear and feel the latch engage.

   Be sure to follow the child restraint manufacturer's instructions for seat belt routing.

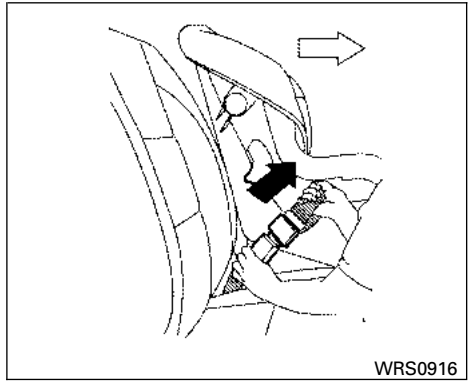


**Forward-Facing — step 4**

4. Remove any additional slack from the seat belt. Press downward and rearward firmly in the center of the child restraint with your knee to compress the vehicle seat cushion and seatback while pulling up on the seat belt.

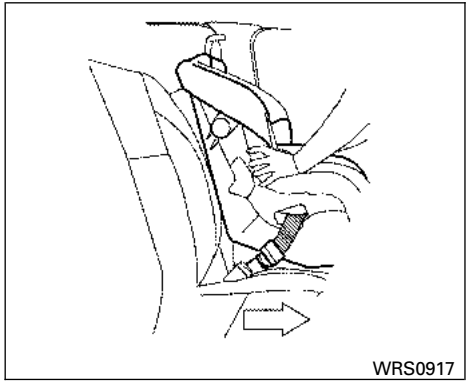


**Forward-Facing — step 5**

5. After attaching the child restraint, test it before you place the child in it. Push it from side to side while holding the child restraint near the seat belt path. The child restraint should not move more than 1 inch (25 mm), from side to side. Try to tug it forward and check to see if the seat belt holds the restraint in place. If the restraint is not secure, tighten the seat belt as necessary, or put the restraint in another seat and test it again. You may need to try a different child restraint. Not all child restraints fit in all types of vehicles.
6. Check to make sure the child restraint is properly secured prior to each use. If the seat belt is not locked, repeat steps 3 through 5.

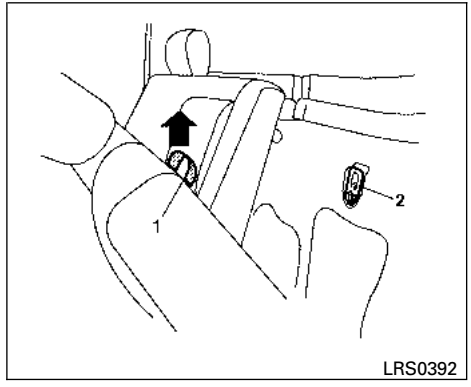


**Anchor point access**

## INSTALLING TOP TETHER STRAP (Rear bench seat)

To access the anchor points ② behind the rear bench seat, tilt the rear seatback forward by lifting up on the pull strap ① behind the seatback.

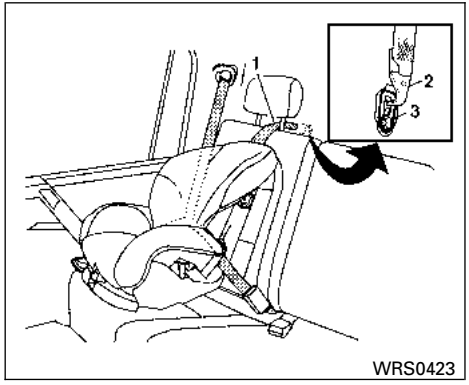


**Rear bench seat**

Before securing the child restraint with the LATCH lower anchors (rear outboard seating positions only) or the seat belt, as applicable, follow these steps.

1. If necessary, raise or remove the head restraint to position the top tether strap ① over the top of the seatback. If the head restraint is removed, store it in a secure place. Be sure to reinstall the head restraint when the child restraint is removed. **See "Head restraints" in this section for head restraint adjustment, removal and installation information.**
2. Position the top tether strap over the top of the seatback and under the head restraint.
3. Secure the tether strap ② to the tether anchor point ③ on the seat directly behind the child restraint.
4. Return the seatback to the locked position.
5. Refer to the appropriate child restraint installation procedure steps in this section before tightening the tether strap.

**If you have any questions when installing a top tether strap, consult your NISSAN dealer for details.**

## BOOSTER SEATS

### Precautions on booster seats

**⚠WARNING**

**If a booster seat and seat belt are not used properly, the risk of a child being injured in a sudden stop or collision greatly increases:**

- **Make sure the shoulder portion of the belt is away from the child's face and neck and the lap portion of the belt does not cross the stomach.**
- **Make sure the shoulder belt is not behind the child or under the child's arm.**
- **A booster seat must only be installed in a seating position that has a lap/shoulder belt.**

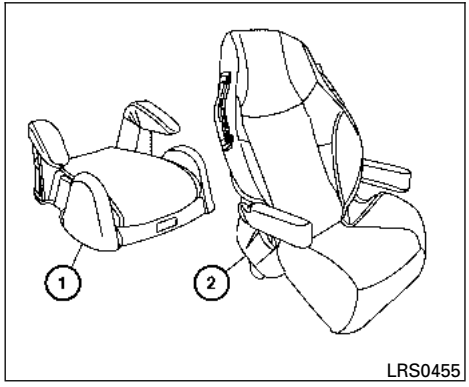


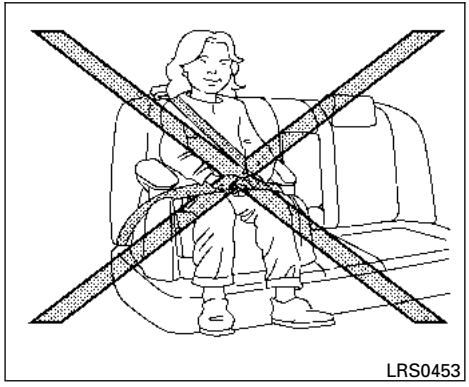


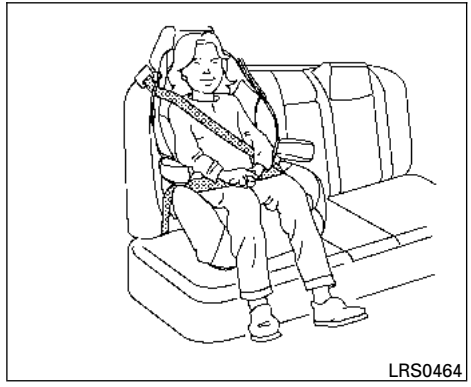


Booster seats of various sizes are offered by several manufacturers. When selecting any booster seat, keep the following points in mind:

- Choose only a booster seat with a label certifying that it complies with Federal Motor Vehicle Safety Standard 213 or Canadian Motor Vehicle Safety Standard 213.
- Check the booster seat in your vehicle to be sure it is compatible with the vehicle's seat and seat belt system.

- Make sure the child's head will be properly supported by the booster seat or vehicle seat. The seatback must be at or above the center of the child's ears. For example, if a low back booster seat ① is chosen, the vehicle seatback must be at or above the center of the child's ears. If the seatback is lower than the center of the child's ears, a high back booster seat ② should be used.
- If the booster seat is compatible with your vehicle, place the child in the booster seat and check the various adjustments to be sure the booster seat is compatible with the child. Always follow all recommended procedures.

**All U.S. states and Canadian provinces or territories require that infants and small children be restrained in an approved child restraint at all times while the vehicle is being operated.**

The instructions in this section apply to booster seat installation in the rear seats or the front passenger seat.

## Booster seat installation on front passenger seat and rear seat

**⚠CAUTION**

**Do not use the lap/shoulder belt in the Automatic Locking Retractor mode when using a booster seat with the seat belts.**

Refer to all Warnings and Cautions in the "Child Safety", "Child Restraints" and "Booster Seats" sections before installing a child restraint.

Follow these steps to install a booster seat in the rear seat or in the front passenger seat:

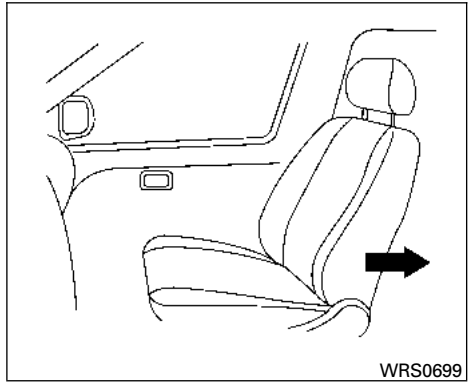


1. **If you must install a booster seat in the front seat, move the seat to the rearmost position.**
2. Position the booster seat on the seat. Only place it in a front-facing direction. Always follow the booster seat manufacturer's instructions.

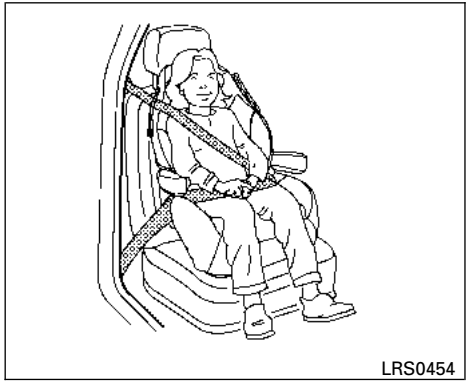


**Front passenger position**

3. The booster seat should be positioned on the vehicle seat so that it is stable.

   If necessary, adjust or remove the head restraint to obtain the correct booster seat fit. If the head restraint is removed, store it in a secure place. **Be sure to reinstall the head restraint when the booster seat is removed.** See “Head restraints” in this section for head restraint adjustment, removal and installation information.

   If the seating position does not have an adjustable head restraint and it is interfering with the proper booster seat fit, try another seating position or a different booster seat.

4. Position the lap portion of the seat belt low and snug on the child’s hips. Be sure to follow the booster seat manufacturer’s instructions for adjusting the seat belt routing.

5. Pull the shoulder belt portion of the seat belt toward the retractor to take up extra slack. Be sure the shoulder belt is positioned across the top, middle portion of the child’s shoulder. Be sure to follow the booster seat manufacturer’s instructions for adjusting the seat belt routing.

6. Follow the warnings, cautions and instructions for properly fastening a seat belt shown in “Three-point type seat belt with retractor” earlier in this section.

7. If the booster seat is installed in the front passenger seat, place the ignition switch in the ON position. The front passenger air bag status light may or may not illuminate, depending on the size of the child and the type of booster seat being used. See “Front passenger air bag and status light” later in this section.

# SUPPLEMENTAL RESTRAINT SYSTEM

## PRECAUTIONS ON SUPPLEMENTAL RESTRAINT SYSTEM

This Supplemental Restraint System (SRS) section contains important information concerning the following systems:

- Driver and passenger supplemental front-impact air bag (NISSAN Advanced Air Bag System)
- Front seat-mounted side-impact supplemental air bag
- Roof-mounted curtain side-impact and rollover supplemental air bag
- Seat belt with pretensioner

**Supplemental front-impact air bag system:** The NISSAN Advanced Air Bag System can help cushion the impact force to the head and chest of the driver and right front passenger in certain frontal collisions.

**Front seat-mounted side-impact supplemental air bag system:** This system can help cushion the impact force to the chest area of the driver and right front passenger in certain side impact collisions. The side air bag is designed to inflate on the side where the vehicle is impacted.

**Roof-mounted curtain side-impact and rollover supplemental air bag system:** This system can help cushion the impact force to the head of occupants in front and rear outboard seating positions in certain side impact or rollover collisions. In a side impact, the curtain and rollover air bags are designed to inflate on the side where the vehicle is impacted. In a rollover, both curtain and rollover air bags are designed to inflate and remain inflated for a short time.

These supplemental restraint systems are designed to **supplement** the crash protection provided by the seat belts and are **not a substitute** for them. Seat belts should always be correctly worn and the occupant seated a suitable distance away from the steering wheel, instrument panel and door finishers. See “Seat belts” earlier in this section for instructions and precautions on seat belt usage.

**The supplemental air bags operate only when the ignition switch is in the ON or START position.**

**After turning the ignition key to the ON position, the supplemental air bag warning light illuminates. The supplemental air bag warning light will turn off after about 7 seconds if the system is operational.**

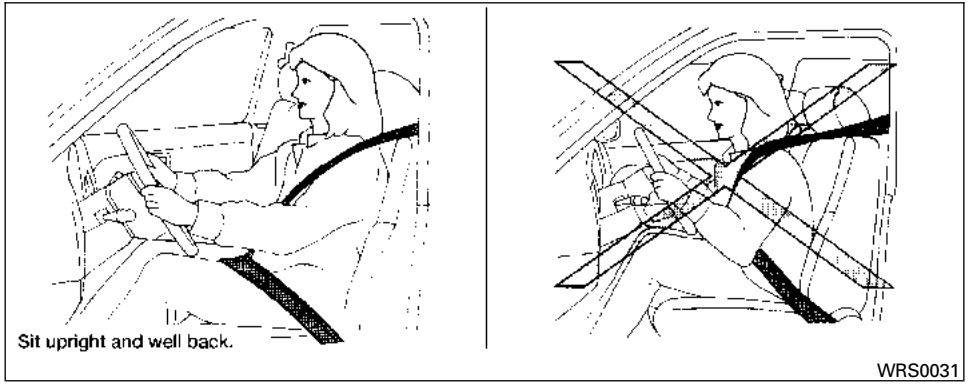


**⚠WARNING**

- **The front air bags ordinarily will not inflate in the event of a side impact, rear impact, rollover, or lower severity frontal collision. Always wear your seat belts to help reduce the risk or severity of injury in various kinds of accidents.**
- **The front passenger air bag will not inflate if the passenger air bag status light is lit or if the front passenger seat is unoccupied. See "Front passenger air bag and status light" later in this section.**
- **The seat belts and the front air bags are most effective when you are sitting well back and upright in the seat. The front air bags inflate with great force. Even with the NISSAN Advanced Air Bag System, if you are unrestrained, leaning forward, sitting sideways or out of position in any way, you are at greater risk of injury or death in a crash. You may also receive serious or fatal injuries from the front air bag if you are up against it when it inflates. Always sit back against the seatback and as far away as practical from the steering wheel or instrument panel. Always use the seat belts.**
- **The driver and front passenger seat belt buckles are equipped with sensors that detect if the seat belts are fastened. The Advanced Air Bag System monitors the severity of a collision and seat belt usage then inflates the air bags as needed. Failure to properly wear seat belts can increase the risk or severity of injury in an accident.**
- **The front passenger seat is equipped with an occupant classification sensor (pressure sensor) that turns the front passenger air bag OFF under some conditions. This sensor is only used in this seat. Failure to be properly seated and wearing the seat belt can increase the risk or severity of injury in an accident. See "Front Passenger air bag and status light" later in this section.**
- **Keep hands on the outside of the steering wheel. Placing them inside the steering wheel rim could increase the risk that they are injured when the front air bag inflates.**

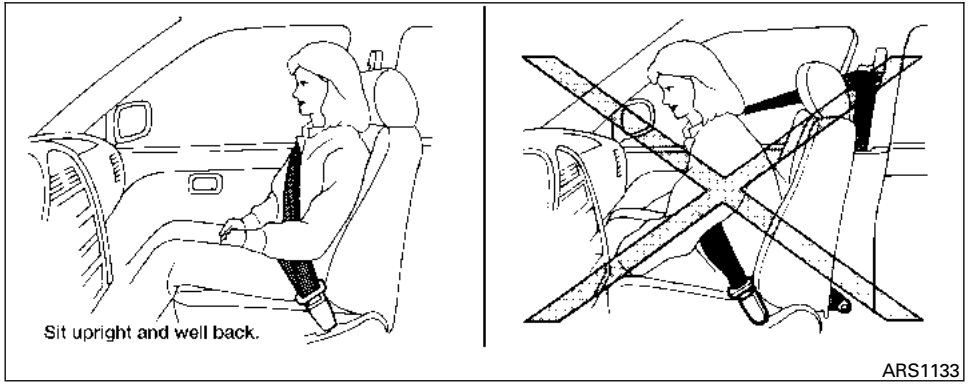


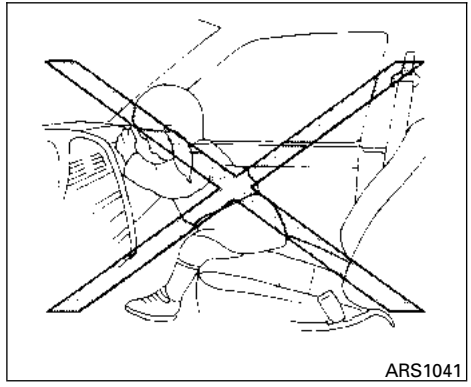


**⚠ WARNING**

- **Never let children ride unrestrained or extend their hands or face out of the window. Do not attempt to hold them in your lap or arms. Some examples of dangerous riding positions are shown in the illustrations.**

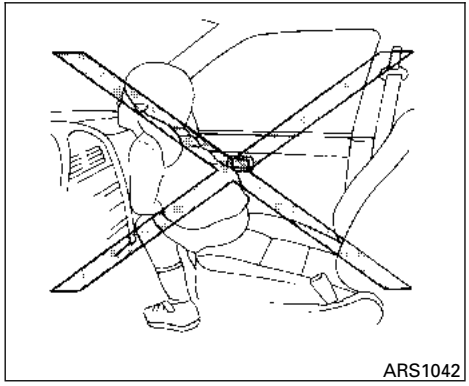
ARS1042

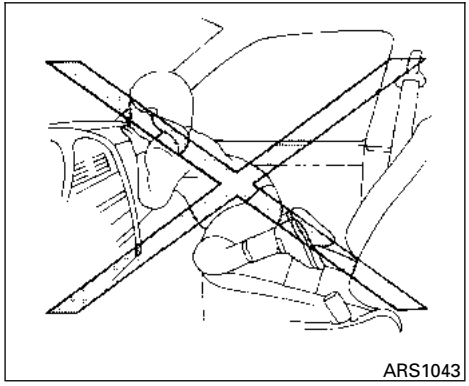
ARS1043

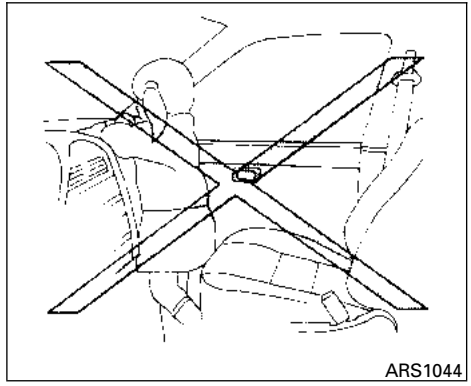
ARS1044

**⚠ WARNING**

- **Children may be severely injured or killed when the front air bags, side air bags or curtain and rollover air bags inflate if they are not properly restrained. Pre-teens and children should be properly restrained in the rear seat, if possible.**

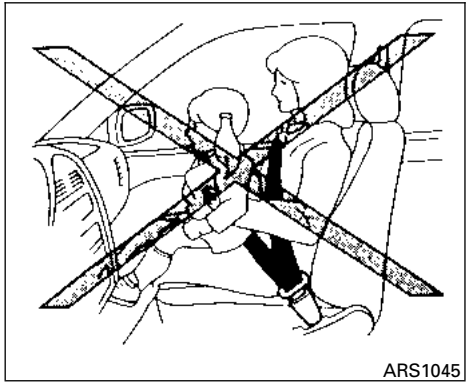


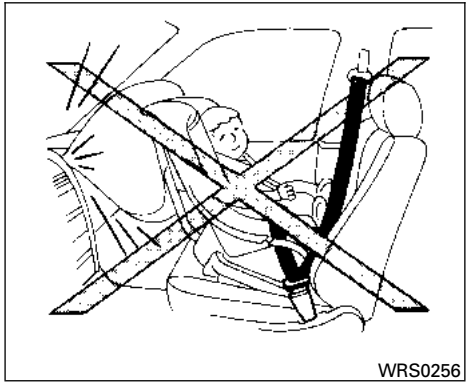


**WARNING**

- **Even with the NISSAN Advanced Air Bag System, never install a rear-facing child restraint in the front seat. An inflating front air bag could seriously injure or kill your child. See "Child restraints" earlier in this section for details.**

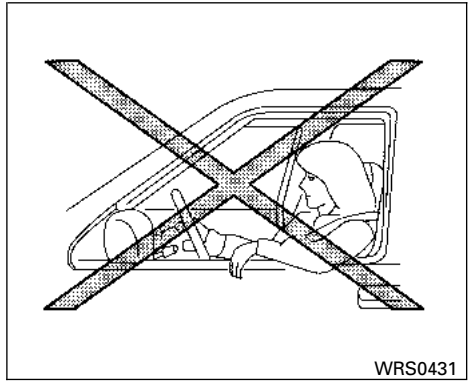


**Do not lean against doors or windows.**

**WARNING**

**Front seat-mounted side-impact supplemental air bags and roof-mounted curtain side-impact and rollover supplemental air bags:**

- **The side air bags and curtain and rollover air bags ordinarily will not inflate in the event of a frontal impact, rear impact, or lower severity side collision. Always wear your seat belts to help reduce the risk or severity of injury in various kinds of accidents.**

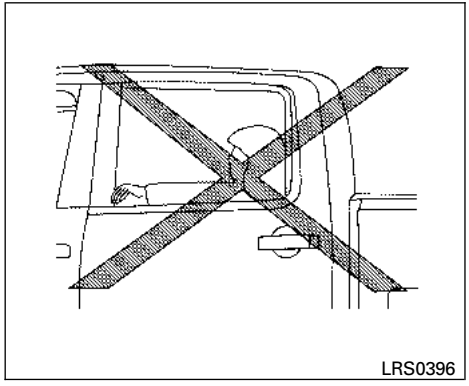


**Do not lean against doors or windows.**

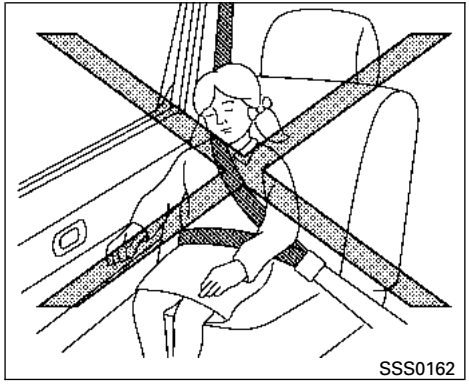


**Do not lean against doors or windows.**

**⚠ WARNING**

- **The seat belts, the side air bags and curtain and rollover air bags are most effective when you are sitting well back and upright in the seat. The side air bag and curtain and rollover air bag inflate with great force. Do not allow anyone to place their hand, leg or face near the side air bag on the side of the seatback of the front seat or near the side roof rails. Do not allow anyone sitting in the front seats or rear outboard seats to extend their hand out of the window or lean against the door. Some examples of dangerous riding positions are shown in the previous illustrations.**

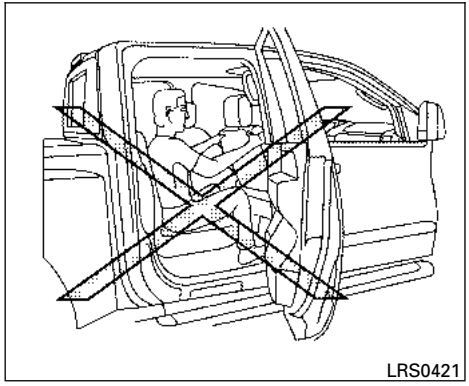


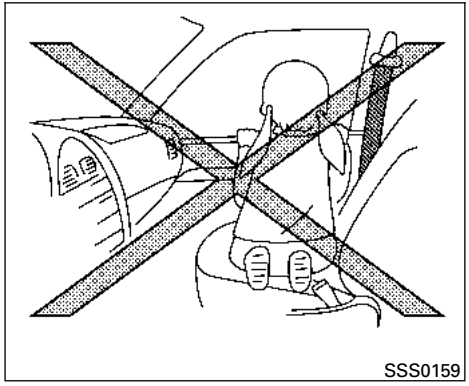


**⚠WARNING**

- **When sitting in the rear seat, do not hold onto the seatback of the front seat. If the side air bag inflates, you may be seriously injured. Be especially careful with children, who should always be properly restrained. Some examples of dangerous riding positions are shown in the illustrations.**
- **Do not use seat covers on the front seatbacks. They may interfere with side air bag inflation.**

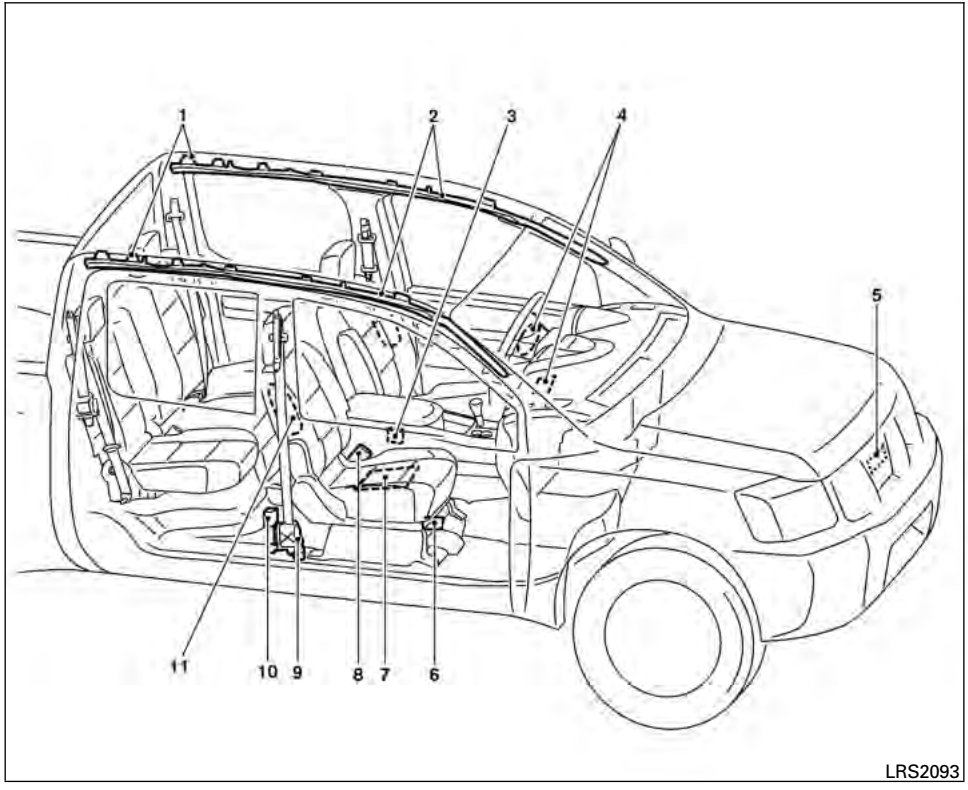


1. Roof-mounted curtain side-impact and rollover supplemental air bag
2. Roof-mounted curtain side-impact and rollover supplemental air bags inflators
3. Air bag Control Unit (ACU)
4. Supplemental front-impact air bag modules
5. Crash zone sensor
6. Occupant classification system control unit
7. Occupant classification sensor (pressure sensor)
8. Seat belt buckle switches
9. Seat belt with pretensioner
10. Satellite sensors
11. Front seat-mounted side-impact supplemental air bag modules

## NISSAN Advanced Air Bag System (front seats)

This vehicle is equipped with the NISSAN Advanced Air Bag System for the driver and right front passenger seats. This system is designed to meet certification requirements under U.S. regulations. It is also permitted in Canada. **However, all of the information, cautions and warnings in this manual still apply and must be followed.**

The driver supplemental front-impact air bag is located in the center of the steering wheel. The passenger supplemental front-impact air bag is mounted in the dashboard above the glove box. The supplemental front air bags are designed to inflate in higher severity frontal collisions, although they may inflate if the forces in another type of collision are similar to those of a higher severity frontal impact. They may not inflate in certain frontal collisions. Vehicle damage (or lack of it) is not always an indication of proper front air bag system operation.

The NISSAN Advanced Air Bag System has dual stage inflators. It also monitors information from the crash zone sensor, the Air Bag Control Unit (ACU), seat belt buckle sensors, occupant classification sensor (pressure sensor) and right front passenger seat belt tension sensor. Inflator operation is based on the severity of a collision and seat belt usage for the driver. For the right front passenger, it additionally monitors the weight of an occupant or object on the seat and seat belt tension. Based on information from the sensors, only one front air bag may inflate in a crash, depending on the crash severity and whether the front occupants are belted or unbelted. Additionally, the right front passenger air bag may be automatically turned OFF under some conditions, depending on the weight detected on the passenger seat and how the seat belt is used. If the front passenger air bag is OFF, the passenger air bag status light will be illuminated (if the seat is unoccupied, the light will not be illuminated, but the air bag will be off). See “Front passenger air bag and status light” later in this section for further details. One front air bag inflating does not indicate improper performance of the system.

If you have any questions about your air bag system, please contact NISSAN or your NISSAN dealer. If you are considering modification of your vehicle due to a disability, you may also contact NISSAN. Contact information is contained in the beginning of this Owner’s Manual.

When a front air bag inflates, a fairly loud noise may be heard, followed by the release of smoke. This smoke is not harmful and does not indicate a fire. Care should be taken to not inhale it, as it may cause irritation and choking. Those with a history of a breathing condition should get fresh air promptly.

Front air bags, along with the use of seat belts, help to cushion the impact force on the face and chest of the driver and right front passenger. They can help save lives and reduce serious injuries. However, an inflating front air bag may cause facial abrasions or other injuries. Front air bags do not provide restraint to the lower body.

Even with NISSAN advanced air bags, seat belts should be correctly worn and the driver and passenger seated upright as far as practical away from the steering wheel or instrument panel. The front air bags inflate quickly in order to help protect the front occupants. Because of this, the force of the front air bag inflating can increase the risk of injury if the occupant is too close to, or is against, the front air bag module during inflation.

The front air bags deflate quickly after a collision.

**The front air bags operate only when the ignition switch is in the ON or START position.**

**After turning the ignition key to the ON position, the supplemental air bag warning light illuminates. The supplemental air bag warning light will turn off after about 7 seconds if the system is operational.**

**Front passenger air bag and status light**

**⚠WARNING**

**The front passenger air bag is designed to automatically turn OFF under some conditions. Read this section carefully to learn how it operates. Proper use of the seat, seat belt and child restraints is necessary for most effective protection. Failure to follow all instructions in this manual concerning the use of seats, seat belts and child restraints can increase the risk or severity of injury in an accident.**

### Status light

The right front passenger air bag status light is located under the climate controls. After the ignition switch is placed in the "ON" position, the front passenger air bag status light on the instrument panel illuminates for about 7 seconds and then turns off or operates depending on the front passenger seat occupied status. The light operates as follows:

- Unoccupied passenger's seat: The is OFF and the front passenger air bag is OFF and will not inflate in a crash.
- Passenger's seat occupied by a small adult, child or child restraint as outlined in this section: The illuminates to indicate that the front passenger air bag is OFF and will not inflate in a crash.
- Occupied passenger seat and the passenger meets the conditions outlined in this section: The light is OFF to indicate that the front passenger air bag is operational.

### Front passenger air bag

The right front passenger air bag is designed to automatically turn OFF when the vehicle is operated under some conditions as described below in accordance with U.S. regulations. If the front passenger air bag is OFF, it will not inflate in a crash. The driver air bag and other air bags in your vehicle are not part of this system.

The purpose of the regulation is to help reduce the risk of injury or death from an inflating air bag to certain front passenger seat occupants, such as children, by requiring the air bag to be automatically turned OFF. Certain sensors are used to meet the requirements.

One sensor used is the occupant classification sensor (pressure sensor). It is in the bottom of the right front passenger seat cushion and is designed to detect an occupant and objects on the right front seat by weight. It works together with seat belt sensors described later. For example, if a child is in the right front passenger seat, the Advanced Air Bag System is designed to turn the passenger air bag OFF in accordance with the regulations. Also, if a child restraint of the type specified in the regulations is on the seat, its weight and the child's weight can be detected and cause the air bag to turn OFF. Occupant classification sensor operation can vary depending on the right front passenger seat belt sensors.

The front passenger seat belt sensors are designed to detect if the seat belt is buckled and the amount of tension on the seat belt, such as when it is in the Automatic Locking Retractor (ALR) mode (child restraint mode). Based on the

weight on the seat detected by the occupant classification sensor and the belt tension detected on the seat belt, the Advanced Air Bag System determines whether the front passenger air bag should be automatically turned OFF, as required by the regulations.

Front passenger seat adult occupants who are properly seated and using the seat belt as outlined in this manual should not cause the passenger air bag to be automatically turned OFF. For small adults it may be turned OFF; however, if the occupant takes his/her weight off the seat cushion (for example, by not sitting upright, by sitting on an edge of the seat, or by otherwise being out of position), this could cause the sensor to turn the air bag OFF. In addition, if the occupant improperly uses the seat belt in the ALR mode (child restraint mode), this could cause the air bag to be turned OFF. Always be sure to be seated and wearing the seat belt properly for the most effective protection by the seat belt and supplemental air bag.

NISSAN recommends that pre-teens and children be properly restrained in a rear seat. NISSAN also recommends that appropriate child restraints and booster seats be properly installed in a rear seat. If this is not possible, the occupant classification sensor and seat belt sensors are designed to operate as described above to turn the front passenger air bag OFF for specified child restraints as required by the regulations. Failing to properly secure child restraints and to use the ALR mode (child restraint mode) may allow the restraint to tip or move in an accident or sudden stop. This can also result in the passenger air bag inflating in a crash instead of being OFF. See “Child restraints” earlier in this section for proper use and installation.

If the right front passenger seat is not occupied the passenger air bag is designed not to inflate in a crash. However, heavy objects placed on the seat could result in air bag inflation, because of the object’s weight detected by the occupant classification sensor. Other conditions could also result in air bag inflation, such as if a child is standing on the seat, or if two children are on the seat, contrary to the instructions in this manual. Always be sure that you and all vehicle occupants are seated and restrained properly.

Using the passenger air bag status light, you can monitor when the front passenger air bag is automatically turned OFF with the seat occupied. The light will not illuminate when the right front passenger seat is unoccupied.

If an adult occupant is in the seat but the passenger air bag status light is illuminated (indicating that the air bag is OFF), it could be that the person is a small adult, or is not sitting on the seat properly or not using the seat belt properly.

If a child restraint must be used in the front seat, the passenger air bag status light may or may not be illuminated, depending on the size of the child and the type of child restraint being used. If the air bag status light is not illuminated (indicating that the air bag might inflate in a crash), it could be that the child restraint or seat belt is not being used properly. Make sure that the child restraint is installed properly, the seat belt is used properly and the occupant is positioned properly. If the air bag status light is not illuminated, reposition the occupant or child restraint in a rear seat.

If the passenger air bag status light will not illuminate even though you believe that the child restraint, the seat belts and the occupant are properly positioned, the system may be sensing an unoccupied seat (in which case the air bag is OFF). Your NISSAN dealer can check that the system is OFF by using a special tool. However, until you have confirmed with your dealer that your air bag is working properly, reposition the occupant or child restraint in a rear seat.

The air bag system and passenger air bag status light will take a few seconds to register a change in the passenger seat status. For example, if a large adult who is sitting in the front passenger seat exits the vehicle, the passenger air bag status light will go from OFF to ON for a few seconds and then to OFF. This is normal system operation and does not indicate a malfunction.

If a malfunction occurs in the front passenger air bag system, the supplemental air bag warning light , located in the meter and gauges area on the driver's side of the instrument panel, will blink. Have the system checked by a NISSAN dealer.

**Other supplemental front-impact air bag precautions**

**WARNING**

- **Do not place any objects on the steering wheel pad or on the instrument panel. Also, do not place any objects between any occupant and the steering wheel or instrument panel. Such objects may become dangerous projectiles and cause injury if the front air bags inflate.**
- **Immediately after inflation, several front air bag system components will be hot. Do not touch them; you may severely burn yourself.**
- **No unauthorized changes should be made to any components or wiring of the supplemental air bag system. This is to prevent accidental inflation of the supplemental air bag or damage to the supplemental air bag system.**
- **Do not make unauthorized changes to your vehicle's electrical system, suspension system or front end structure. This could affect proper operation of the front air bag system.**
- **Tampering with the front air bag system may result in serious personal injury. Tampering includes changes to the steering wheel and the instrument panel assembly by placing material over the steering wheel pad and above the instrument panel or by installing additional trim material around the air bag system.**
- **Modifying or tampering with the front passenger seat may result in serious personal injury. For example, do not change the front seats by placing material on the seat cushion or by installing additional trim material, such as seat covers, on the seat that are not specifically designed to assure proper air bag operation. Additionally, do not stow any objects under the front passenger seat or the seat cushion and seatback. Such objects may interfere with the proper operation of the occupant classification sensor (pressure sensor).**
- **No unauthorized changes should be made to any components or wiring of the seat belt system. This may affect the front air bag system. Tampering with the seat belt system may result in serious personal injury.**
- **Work on and around the front air bag system should be done by a NISSAN dealer. Installation of electrical equipment should also be done by a NISSAN dealer. The Supplemental Restraint System (SRS) wiring should not be modified or disconnected. Unauthorized electrical test equipment and probing devices should not be used on the air bag system.**
- **A cracked windshield should be replaced immediately by a qualified repair facility. A cracked windshield could affect the function of the supplemental air bag system.**

***The SRS wiring harness connectors are yellow and orange for easy identification.**

When selling your vehicle, we request that you inform the buyer about the front air bag system and guide the buyer to the appropriate sections in this Owner's Manual.

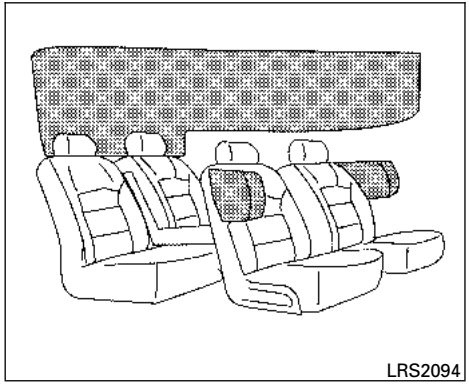


## Front seat-mounted side-impact supplemental air bag and roof-mounted curtain side-impact and rollover supplemental air bag systems

The side air bags are located in the outside of the seatback of the front seats. The curtain and rollover air bags are located in the side roof rails. These systems are designed to meet voluntary guidelines to help reduce the risk of injury to out-of-position occupants. **However, all of the information, cautions and warnings in this manual still apply and must be followed.** The side air bags and curtain and rollover air bags are designed to inflate in higher severity side collisions, although they may inflate if the forces in another type of collision are similar to those of a higher severity side impact. They are designed to inflate on the side where the vehicle is impacted. They may not inflate in certain side collisions.

Curtain and rollover air bags are also designed to inflate in certain types of rollover collisions or near rollovers. As a result, certain vehicle movements (for example, during severe off roading) may cause the curtain and rollover air bags to inflate.

Vehicle damage (or lack of it) is not always an indication of proper side air bag and curtain and rollover air bag operation.

When the side air bags and curtain and rollover air bags inflate, a fairly loud noise may be heard, followed by release of smoke. This smoke is not harmful and does not indicate a fire. Care should be taken not to inhale it, as it may cause irritation and choking. Those with a history of a breathing condition should get fresh air promptly.

Side air bags, along with the use of seat belts, help to cushion the impact force on the chest of the front occupants. Curtain and rollover air bags help to cushion the impact force to the head of occupants in the front and rear outboard seating positions. They can help save lives and reduce serious injuries. However, an inflating side air bag or curtain and rollover air bag may cause abrasions or other injuries. Side air bags and curtain and rollover air bags do not provide restraint to the lower body.

The seat belts should be correctly worn and the driver and passenger seated upright as far as practical away from the side air bag. Rear seat passengers should be seated as far away as practical from the door finishers and side roof rails. The side air bags and curtain and rollover air bags inflate quickly in order to help protect the occupants. Because of this, the force of the side air bag and curtain and rollover air bag inflating can increase the risk of injury if the occupant is too close to, or is against, these air bag modules during inflation. The side air bag will deflate quickly after the collision is over.

The curtain and rollover air bags will remain inflated for a short time.

**The side air bags and curtain and rollover air bags operate only when the ignition switch is in the ON or START position.**

**After placing the ignition switch in the ON position, the supplemental air bag warning light illuminates. The supplemental air bag warning light will turn off after about 7 seconds if the system is operational.**

**⚠WARNING**

- **Do not place any objects near the seatback of the front seats. Also, do not place any objects (an umbrella, bag, etc.) between the front door finisher and the front seat. Such objects may become dangerous projectiles and cause injury if a side air bag inflates.**
- **Right after inflation, several side air bag and curtain and rollover air bag system components will be hot. Do not touch them; you may severely burn yourself.**
- **No unauthorized changes should be made to any components or wiring of the side air bag and curtain and rollover air bag systems. This is to prevent damage to or accidental inflation of the side air bag and curtain and rollover air bag systems.**
- **Do not make unauthorized changes to your vehicle's electrical system, suspension system or side panel. This could affect proper operation of the curtain and rollover air bag systems.**
- **Tampering with the side air bag system may result in serious personal injury. For example, do not change the front seats by placing material near the seatbacks or by installing additional trim material, such as seat covers, around the side air bag.**
- **Work around and on the side air bag and curtain and rollover air bag systems should be done by a NISSAN dealer. Installation of electrical equipment should also be done by a NISSAN dealer. The SRS wiring harnesses* should not be modified or disconnected. Unauthorized electrical test equipment and probing devices should not be used on the side air bag or curtain and rollover air bag systems.**

*** The SRS wiring harness or connectors are yellow or orange for easy identification.**

When selling your vehicle, we request that you inform the buyer about the side air bag and curtain and rollover air bag systems and guide the buyer to the appropriate sections in this Owner's Manual.

## Seat belts with pretensioners (Front seats)

**⚠WARNING**

- **The pretensioners cannot be reused after activation. They must be replaced together with the retractor and buckle as a unit.**
- **If the vehicle becomes involved in a collision but a pretensioner is not activated, be sure to have the pretensioner system checked and, if necessary, replaced by your NISSAN dealer.**
- **No unauthorized changes should be made to any components or wiring of the pretensioner system. This is to prevent damage to or accidental activation of the pretensioners. Tampering with the pretensioner system may result in serious personal injury.**
- **Work around and on the pretensioner system should be done by a NISSAN dealer. Installation of electrical equipment should also be done by a NISSAN dealer. Unauthorized electrical test equipment and probing devices should not be used on the pretensioner system.**

- **If you need to dispose of a pretensioner or scrap the vehicle, contact a NISSAN dealer. Incorrect disposal procedures could cause personal injury.**

The pretensioner system may activate with the supplemental air bag system in certain types of collisions. Working with the seat belt retractor, the pretensioner helps tighten the seat belt when the vehicle becomes involved in certain types of collisions, helping to restrain front seat occupants.

The pretensioner is encased with the seat belt retractor. These seat belts are used the same way as conventional seat belts.

When a pretensioner activates, smoke is released and a loud noise may be heard. This smoke is not harmful and does not indicate a fire. Care should be taken not to inhale it, as it may cause irritation and choking. Those with a history of a breathing condition should get fresh air promptly.

After pretensioner activation, load limiters allow the seat belt to release webbing (if necessary) to reduce forces against the chest.

The supplemental air bag warning light is used to indicate malfunctions in the pretensioner system. (See "SUPPLEMENTAL AIR BAG WARNING LIGHT" in this section for more details.) If the operation of the supplemental air bag warning light indicates there is a malfunction, have the system checked by a NISSAN dealer.

When selling your vehicle, we request that you inform the buyer about the pretensioner system and guide the buyer to the appropriate sections in this Owner's Manual.

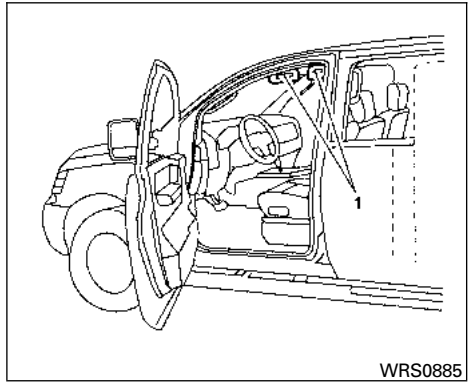


1. SRS Air bag warning labels

   The warning labels are located on the surface of the sun visor.

## SUPPLEMENTAL AIR BAG WARNING LABELS

Warning labels about the supplemental front-impact air bag system are placed in the vehicle as shown in the illustration.

LRS0100

## SUPPLEMENTAL AIR BAG WARNING LIGHT

The supplemental air bag warning light, displaying in the instrument panel, monitors the circuits for the air bag systems, pretensioners and all related wiring.

When the ignition key is in the ON or START position, the supplemental air bag warning light illuminates for about 7 seconds and then turns off. This means the system is operational.

If any of the following conditions occur, the front air bag, side air bag, curtain and rollover air bag and pretensioner systems need servicing:

- The supplemental air bag warning light remains on after approximately 7 seconds.
- The supplemental air bag warning light flashes intermittently.
- The supplemental air bag warning light does not come on at all.

Under these conditions, the front air bag, side air bag and curtain and rollover air bag or pretensioner systems may not operate properly. They must be checked and repaired. Take your vehicle to the nearest NISSAN dealer.

**WARNING**

**If the supplemental air bag warning light is on, it could mean that the front air bag, side air bag, curtain and rollover air bag and/or pretensioner systems will not operate in an accident. To help avoid injury to yourself or others, have your vehicle checked by a NISSAN dealer as soon as possible.**

### Repair and replacement procedure

The front air bags, side air bags, curtain and rollover supplemental air bags and pretensioners are designed to inflate on a one-time-only basis. As a reminder, unless it is damaged, the supplemental air bag warning light remains illuminated after inflation has occurred. Repair and replacement of these supplemental air bag systems should be done only by a NISSAN dealer.

When maintenance work is required on the vehicle, the front air bags, side air bags, curtain and rollover air bags, pretensioners and related parts should be pointed out to the person performing the maintenance. The ignition key should always be in the LOCK position when working under the hood or inside the vehicle.

**WARNING**

- **Once a front air bag, side air bag or curtain and rollover air bag has inflated, the air bag module will not function again and must be replaced. Additionally, the activated pretensioners must also be replaced. The air bag module and pretensioners should be replaced by a NISSAN dealer. The air bag module and pretensioner cannot be repaired.**

- **The front air bag, side air bag, curtain and rollover air bag systems and the pretensioner system should be inspected by a NISSAN dealer if there is any damage to the front end or side portion of the vehicle.**
- **If you need to dispose of a supplemental air bag or pretensioners or scrap the vehicle, contact a NISSAN dealer. Correct supplemental air bag and pretensioner system disposal procedures are set forth in the appropriate NISSAN Service Manual. Incorrect disposal procedures could cause personal injury.**

# 2 Instruments and controls


Instrument panel . . . . . 2-2
Meters and gauges . . . . . 2-4
Speedometer and odometer . . . . . 2-5
Tachometer . . . . . 2-6
Engine coolant temperature gauge . . . . . 2-6
Fuel gauge . . . . . 2-7
Engine oil pressure gauge (if so equipped) . . . . . 2-7
Voltmeter (if so equipped) . . . . . 2-8
Automatic transmission fluid temperature gauge (if so equipped) . . . . . 2-8
Compass display (if so equipped) . . . . . 2-9
Compass display . . . . . 2-10
Warning/indicator lights and audible reminders . . . . . 2-13
Checking bulbs . . . . . 2-13
Warning lights . . . . . 2-13
Indicator lights . . . . . 2-18
Audible reminders . . . . . 2-20
Vehicle Information Display (if so equipped) . . . . . 2-21
How to use the Vehicle Information Display . . . . . 2-21
Security systems (if so equipped) . . . . . 2-25
Vehicle security system (if so equipped) . . . . . 2-25
NISSAN vehicle immobilizer system (if so equipped) . . . . . 2-26
Windshield wiper and washer switch . . . . . 2-27
Switch operation . . . . . 2-27
Rear window and outside mirror (if so equipped) defroster switch . . . . . 2-28
Headlight and turn signal switch . . . . . 2-30
Headlight control switch . . . . . 2-30
Daytime running light system (Canada only) . . . . . 2-32
Instrument brightness control . . . . . 2-33
Turn signal switch . . . . . 2-33
Fog light switch (if so equipped) . . . . . 2-33
Horn . . . . . 2-34
Cargo lamp switch (if so equipped) . . . . . 2-34
Heated seats (if so equipped) . . . . . 2-34
Vehicle Dynamic Control (VDC) off switch . . . . . 2-36
Electronic locking rear differential (E-Lock) system switch (if so equipped) . . . . . 2-36
Power inverter switch (if so equipped) . . . . . 2-37
Rear sonar system off switch (if so equipped) . . . . . 2-38
Tow mode switch . . . . . 2-38
Power outlets . . . . . 2-39
12v Outlets . . . . . 2-39
120v outlet (if so equipped) . . . . . 2-40
Storage . . . . . 2-42

Instrument panel storage trays . . . . . 2-42
Console box (if so equipped) . . . . . 2-43
Center armrest storage (if so equipped) . . . . . 2-44
Glove box . . . . . 2-45
Sunglasses holder (if so equipped) . . . . . 2-45
Map pockets . . . . . 2-46
Seatback pocket (if so equipped) . . . . . 2-46
Overhead console (if so equipped) . . . . . 2-46
Cup holders . . . . . 2-47
Grocery hooks (if so equipped) . . . . . 2-50
Lockable bedside storage compartment (if so equipped) . . . . . 2-50
Windows . . . . . 2-51
Power windows (if so equipped) . . . . . 2-51
Manual windows (if so equipped) . . . . . 2-53
Rear sliding window (if so equipped) . . . . . 2-53
Rear power window switch (if so equipped) . . . . . 2-54
Moonroof (if so equipped) . . . . . 2-54
Automatic moonroof . . . . . 2-54
Interior light . . . . . 2-56
Console light (if so equipped) . . . . . 2-57
Personal lights (if so equipped) . . . . . 2-57
Map lights (if so equipped) . . . . . 2-58
HomeLink® universal transceiver (if so equipped) . . . . . 2-58
Programming HomeLink® . . . . . 2-59
Programming HomeLink® for Canadian customers and gate openers . . . . . 2-60
Operating the HomeLink® universal transceiver . . . . . 2-60
Programming trouble-diagnosis . . . . . 2-61
Clearing the programmed information . . . . . 2-61
Reprogramming a single HomeLink® button . . . . . 2-61
If your vehicle is stolen . . . . . 2-61

## INSTRUMENT PANEL

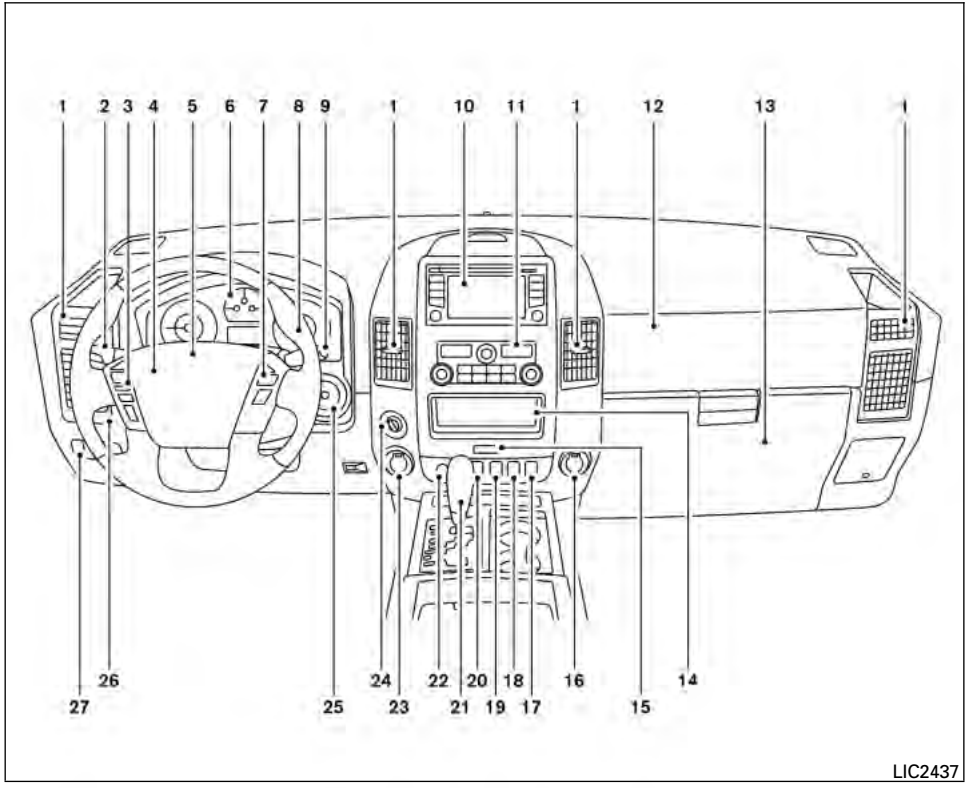


1. Vents (P. 4-17)
2. Headlight/fog light (if so equipped)/turn signal switch (P. 2-30)
3. Steering wheel switch for audio control/Bluetooth® Hands-Free Phone System (if so equipped) (P. 4-71, P. 4-83, P. 4-98, P. 4-109)
4. Instrument brightness control (P. 2-33)
5. Driver supplemental air bag/horn (P. 1-47, P. 2-34)
6. Meters, gauges and warning/indicator lights (P. 2-4, 2-13)
7. Cruise control main/set switches (if so equipped) (P. 5-21)
8. Shift selector (column) (if so equipped) (P. 5-16)
9. Windshield wiper/washer switch (P. 2-27)
10. Navigation system* (if so equipped) (P. 4-4)
11. Climate controls (P. 4-17, P. 4-25, P. 4-32)
12. Front passenger supplemental air bag (P. 1-47)
13. Glove box (P. 2-45)
14. Storage tray (P. 2-45)

15. Front passenger air bag status light (P. 1-56)
16. Power outlet (P. 2-39)
17. Heated seat switch (if so equipped) (P. 2-34)
18. Vehicle Dynamic Control (VDC) off switch (P. 2-36)
19. Tow mode switch (P. 2-38)
20. Electronic locking rear differential (E-Lock) system switch (if so equipped) (P.2-36)
21. Shift selector (console) (if so equipped) (P. 5-16)
22. Hazard warning flasher switch (P. 6-2)
23. Power outlet (P. 2-39)
24. 4WD shift switch (if so equipped) (P. 5-27)
25. Ignition switch (P. 5-9)
26. Tilt steering wheel control (P. 3-14)
27. Cargo lamp switch (if so equipped) (P. 2-34)/Rear sonar system off switch (if so equipped) (P. 2-38)/Pedal position adjustment switch (if so equipped) (P. 3-14)/Rear power window switch (if so equipped) (P. 2-54)

*: Refer to the separate Navigation System Owner's Manual (if so equipped).

**See the page number indicated in parentheses for operating details.**

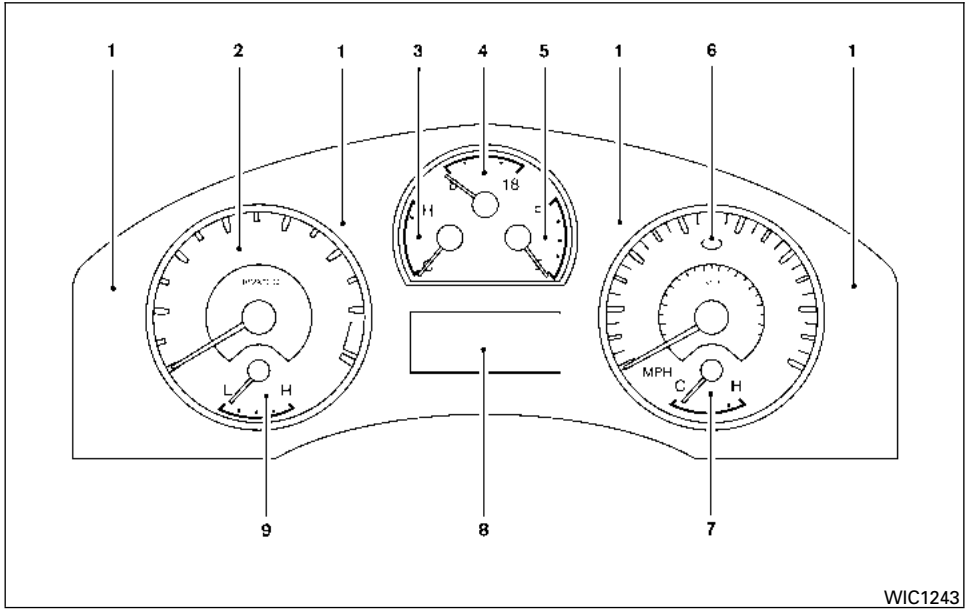


1. Warning/indicator lights
2. Tachometer
3. Engine coolant temperature gauge
4. Voltmeter (if so equipped)
5. Fuel gauge
6. Speedometer
7. Automatic transmission fluid temperature gauge (if so equipped)
8. Odometer/Twin trip odometer/Vehicle Information Display
9. Engine oil pressure gauge (if so equipped)

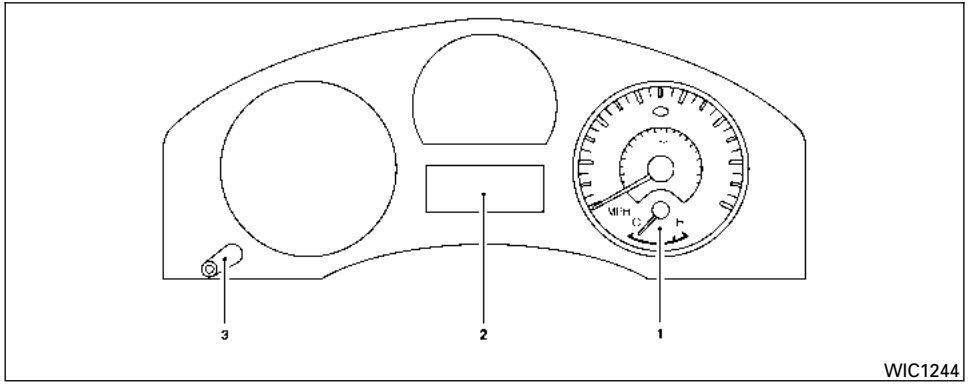


1. Speedometer
2. Odometer/twin trip display
3. Change button

## SPEEDOMETER AND ODOMETER

### Speedometer

The speedometer indicates vehicle speed.

### Odometer/Twin trip odometer

The odometer/twin trip odometer is displayed when the ignition switch is placed in the ON position.

The odometer records the total distance the vehicle has been driven.

The twin trip odometer records the distance of individual trips.

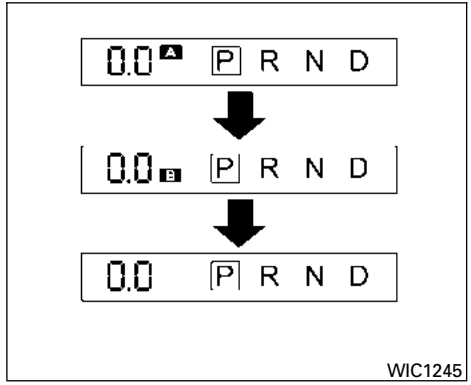


**Changing the display:**

Pushing the change button changes the display as follows:

Trip A → Trip B → Odometer only

Elapsed time, driving distance and average speed information is also available for vehicles with a navigation system. Refer to “Control panel buttons” in the “Display screen, heater, air conditioner, audio and phone systems”.

**Resetting the trip odometer:**

Pushing the change button for more than 1 second resets the currently displayed trip odometer to zero.

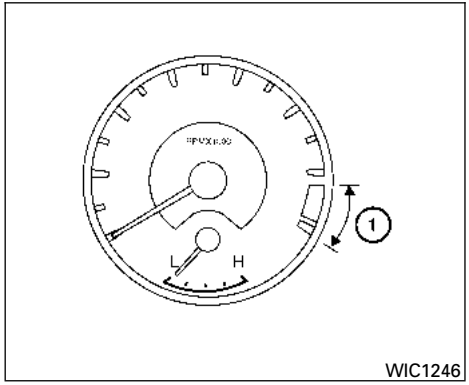

WIC1246

## TACHOMETER

The tachometer indicates engine speed in revolutions per minute (rpm). Do not rev the engine into the red zone ①.

**⚠ CAUTION**

**When engine speed approaches the red zone, shift to a higher gear or reduce engine speed. Operating the engine in the red zone may cause serious engine damage.**

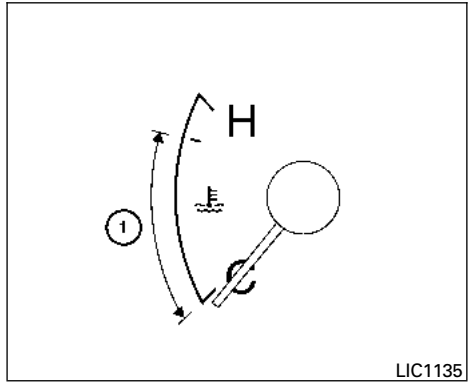

LIC1135

## ENGINE COOLANT TEMPERATURE GAUGE

The gauge indicates the engine coolant temperature. The engine coolant temperature is within the normal range ① when the gauge needle points within the zone shown in the illustration.

The engine coolant temperature varies with the outside air temperature and driving conditions.

**⚠ CAUTION**

**If the gauge indicates coolant temperature near the hot (H) end of the normal range, reduce vehicle speed to decrease temperature. If the gauge is over the normal range, stop the vehicle as soon as safely possible. If the engine is overheated, continued operation of the vehicle may seriously damage the engine. See “If your vehicle overheats” in the “In case of emergency” section for immediate action required.**

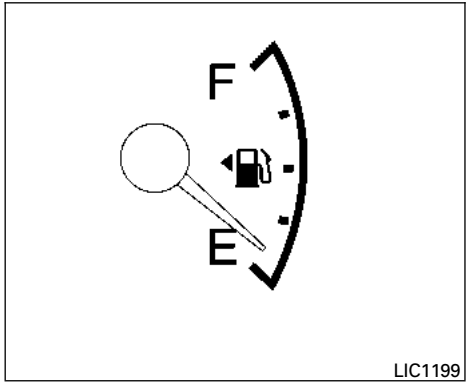


## FUEL GAUGE

The gauge indicates the **approximate** fuel level in the tank.

The gauge may move slightly during braking, turning, acceleration, or going up or down hills.

The gauge needle returns to E (Empty) after the ignition key is turned to OFF.

The low fuel warning light comes on when the amount of fuel in the tank is getting low.

**Refill the fuel tank before the gauge registers E (Empty).**

The indicates that the fuel-filler door is located on the driver's side of the vehicle.

**CAUTION**

- **If the vehicle runs out of fuel, the Malfunction Indicator Light (MIL) may come on. Refuel as soon as possible. After a few driving trips. the light should turn off. If the light remains on after a few driving trips, have the vehicle inspected by a NISSAN dealer.**
- **For additional information, see "Malfunction Indicator Light (MIL)" later in this section.**

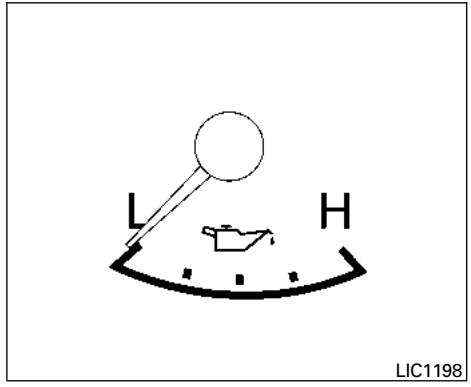


## ENGINE OIL PRESSURE GAUGE (if so equipped)

The gauge indicates the engine lubrication system oil pressure while the engine is running. The needle should be in the middle of the gauge when the engine is running.

**⚠ CAUTION**

- **This gauge is not designed to indicate low engine oil level. Use the dipstick to check the oil level. (See “Engine oil” in the “Maintenance and do-it-yourself” section.)**
- **If the gauge needle does not move with the proper amount of engine oil, have the vehicle checked by a NISSAN dealer. Continued vehicle operation in such a condition could cause serious damage to the engine.**

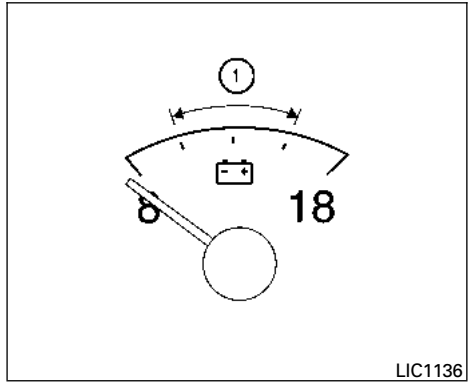

LIC1136

## VOLTMETER (if so equipped)

When the ignition switch is placed in the ON position, the voltmeter indicates the battery voltage. When the engine is running, it indicates the generator voltage.

While cranking the engine, the volts drop below the normal range. If the needle is not in the normal range (11 - 15 volts) ① while the engine is running, it may indicate that the charging system is not functioning properly. Have the system checked by a NISSAN dealer.

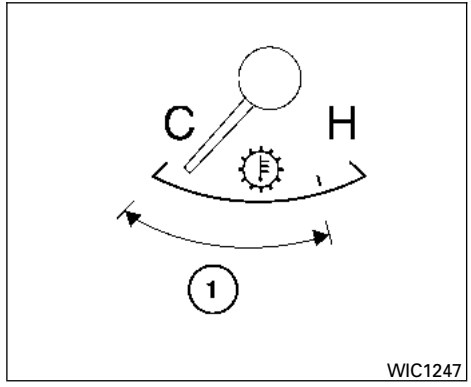

WIC1247

## AUTOMATIC TRANSMISSION FLUID TEMPERATURE GAUGE (if so equipped)

This gauge indicates the temperature of the automatic transmission fluid. The automatic transmission fluid temperature is in the normal range ① when the gauge needle points within the zone shown in the illustration.

## COMPASS DISPLAY (if so equipped)

**⚠ CAUTION**

- **This gauge is not designed to indicate low automatic transmission fluid level. Use the dipstick to check the fluid level. (See "5-speed automatic transmission fluid" in the "Maintenance and do-it-yourself" section.)**
- **If the gauge indicates automatic transmission fluid temperature over the normal range, stop the vehicle as soon as safely possible. Have the vehicle checked by a NISSAN dealer. Continued operation of the vehicle may seriously damage the transmission.**

This unit measures terrestrial magnetism and indicates the heading direction of the vehicle.

With the ignition switch in the ON position, press the ⏻ or -N- button as described in the charts below to activate various features of the automatic anti-glare rearview mirror.

**Type A**

| Push and hold the ⏻ button for about: | Feature: (Push button again for about 1 second to change settings) |
|---|---|
| 1 second | Compass display toggles on/off |
| 8 seconds | Automatic anti-glare/indicator light toggles on/off |
| 11 seconds | Compass zone can be changed to correct false compass readings |
| 13 seconds | Compass enters calibration mode |

**Type B**

| Push and hold the -N- button for about: | Feature: (Push button again for about 1 second to change settings) |
|---|---|
| 1 second | Compass display toggles on/off |
| 8 seconds | Compass zone can be changed to correct false compass readings |
| 10 seconds | Compass enters calibration mode |

For information about the automatic anti-glare feature, refer to "Automatic anti-glare rearview mirror" in the "Pre-driving checks and adjustments" section.

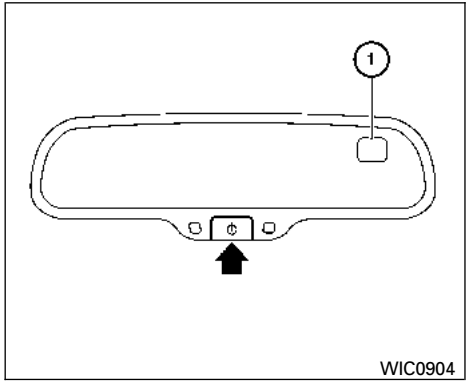


**Type A**

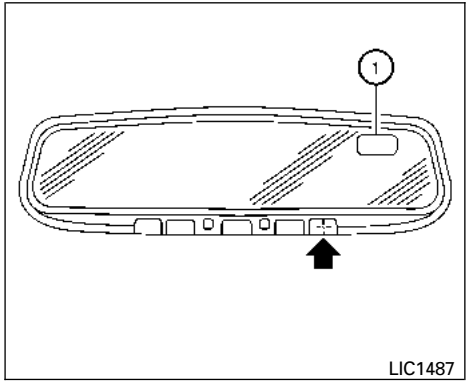


**Type B**

## COMPASS DISPLAY

Push the ⏻ or -N- button for about 1 second when the ignition switch is placed in the ON position to toggle the compass direction display ① on or off. The display will indicate the direction that the vehicle is heading.

N: North
E: East
S: South
W: West

If the display reads “C”, calibrate the compass by driving the vehicle in three complete circles at less than 5 MPH (8 km/h).

You can also calibrate the compass by driving your vehicle on your everyday route. The compass will be calibrated once it has tracked three complete circles.

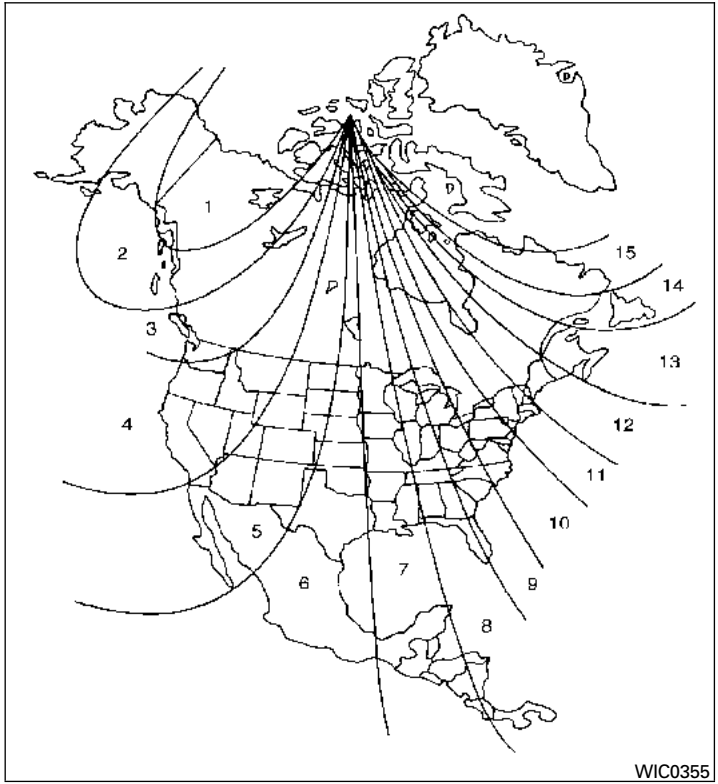


## Zone variation change procedure

The difference between magnetic north and geographical north is known as variance. In some areas, this difference can sometimes be great enough to cause false compass readings. Follow these instructions to set the variance for your particular location if this happens:

1. Press and hold the button for about 11 seconds or the button for about 8 seconds. The current zone number will appear in the display. Release the button.
2. Find your current location on the zone map. Refer to the illustration.
3. Press the or the button repeatedly to toggle through the zone numbers until the desired number appears in the display. Once you have selected a zone number, the display will show a compass direction within a few seconds.

**NOTE:**

**Use zone number 5 for Hawaii.**

**Inaccurate compass direction:**

The compass display is equipped with automatic correction function. If the correct direction is not shown, follow this procedure.

1. With the display turned on, press and hold the ⏻ button for about 13 seconds or the -N- for about 10 seconds. The “C” icon in the compass display will illuminate.
2. Calibrate the compass by driving the vehicle in three complete circles at a maximum speed of 5 MPH (8 km/h).
3. After completing the circles, the display should return to normal.

**⚠ CAUTION**

- **Do not install a ski rack, antenna, etc., which are attached to the vehicle by means of a magnet. They affect the operation of the compass.**
- **When cleaning the mirror, use a paper towel or similar material dampened with glass cleaner. Do not spray glass cleaner directly on the mirror as it may cause the liquid cleaner to enter the mirror housing.**

| | | |
|---|---|---|
| ABS or (ABS) Anti-lock Braking System (ABS) warning light | Low fuel warning light | High beam indicator light (Blue) |
| AT CHECK Automatic transmission check warning light | Low tire pressure warning light | Malfunction indicator light (MIL) |
| ATP Automatic transmission park warning light ( 4X4 model) | Master warning light (if so equipped) | Security indicator light (if so equipped) |
| BRAKE or (!) Brake warning light | Seat belt warning light and chime | Slip indicator light |
| Charge warning light | Supplemental air bag warning light | Turn signal/hazard indicator lights |
| Engine oil pressure low/engine coolant temperature high warning light | DIFF LOCK Electronic locking rear differential (E-Lock) system on indicator light (if so equipped) | OFF Vehicle Dynamic Control (VDC) off indicator light |
| 4WD 4WD warning light ( 4X4 model) | OFF Front passenger air bag status light | |

## CHECKING BULBS

With all doors closed, apply the parking brake and place the ignition switch in the ON position without starting the engine. The following lights will come on:

, BRAKE or (!), , , , 4WD

The following lights come on briefly and then go off:

ABS or (ABS) , , , (!) , OFF

**If any light fails to come on, it may indicate a burned-out bulb or an open circuit in the electrical system. Have the system repaired promptly.**

## WARNING LIGHTS

For additional information on warnings and indicators, see “Vehicle information display” later in this section.

## ABS or (ABS) Anti-lock Braking System (ABS) warning light

When the ignition switch is placed in the ON position, the Anti-lock Braking System (ABS) warning light illuminates and then turns off. This indicates the ABS is operational.

If the ABS warning light illuminates while the engine is running, or while driving, it may indicate the ABS is not functioning properly. Have the system checked by a NISSAN dealer.

If an ABS malfunction occurs, the anti-lock function is turned off. The brake system then operates normally, but without anti-lock assistance. See “Brake system” in the “Starting and driving” section.

## AT CHECK Automatic Transmission check warning light

When the ignition switch is placed in the ON position, the light comes on for about 2 seconds. If the light comes on at any other time, it may indicate the automatic transmission system is not functioning properly. Have the system checked by a NISSAN dealer.

## ATP Automatic transmission park warning light ( 4x4 model)

**⚠WARNING**

- **If the ATP light is ON, this indicates that the automatic transmission P (Park) position will not function and the transfer case is in neutral.**
- **When parking, always make sure that the 4WD shift indicator light illuminates and the parking brake is set. Failure to engage the transfer position in 2WD, 4H or 4LO could result in the vehicle moving unexpectedly, resulting in serious personal injury or property damage.**
- **Shift the 4WD switch into the 2WD, 4H or 4LO position again to turn off the ATP warning light when the shift selector to the P position and the ATP warning light is ON. (Before shifting the 4WD switch into the 4LO position, move the shift selector to the N position once, shift the shift selector into P again and make sure the ATP warning light is OFF.)**

This light indicates that the automatic transmission parking function is not engaged. If the transfer control is not secured in any drive position while the shift selector is in the P (Park) position, the transmission will disengage and the drive wheels will not lock.

## BRAKE or (!) Brake warning light

This light functions for both the parking brake and the foot brake systems.

**Parking brake indicator**

When the ignition switch is placed in the ON position, the light comes on when the parking brake is applied.

**Low brake fluid warning light**

When the ignition switch is placed in the ON position, the light warns of a low brake fluid level. If the light comes on while the engine is running with the parking brake not applied, stop the vehicle and perform the following:

1. Check the brake fluid level. Add brake fluid as necessary. See “Brake fluid” in the “Maintenance and do-it-yourself” section of this manual.
2. If the brake fluid level is correct, have the warning system checked by a NISSAN dealer.

**⚠WARNING**

- **Your brake system may not be working properly if the warning light is on. Driving could be dangerous. If you judge it to be safe, drive carefully to the nearest service station for repairs. Otherwise, have your vehicle towed because driving it could be dangerous.**
- **Pressing the brake pedal with the engine stopped and/or a low brake fluid level may increase your stopping distance and braking will require greater pedal effort as well as pedal travel.**
- **If the brake fluid level is below the MINIMUM or MIN mark on the brake fluid reservoir, do not drive until the brake system has been checked at a NISSAN dealer.**

**Anti-lock Braking System (ABS) warning indicator**

When the parking brake is released and the brake fluid level is sufficient, if both the brake warning light and the Anti-lock Braking System (ABS) warning light illuminate, it may indicate the ABS is not functioning properly. Have the brake system checked, and if necessary, repaired by a NISSAN dealer promptly. Avoid high-speed driving and abrupt braking. (See “Anti-lock Braking System (ABS) warning light” in this section.)

## Charge warning light

If this light comes on while the engine is running, it may indicate the charging system is not functioning properly. Turn the engine off and check the generator belt. If the belt is loose, broken, missing, or if the light remains on, see a NISSAN dealer immediately.

**⚠CAUTION**

- **Do not ground electrical accessories directly to the battery terminal. Doing so will bypass the variable control system and the vehicle battery may not charge completely. Refer to “Variable voltage control system” in the “Maintenance and do-it-yourself” section later in this manual.**
- **Do not continue driving if the generator belt is loose, broken or missing.**

## Engine oil pressure low/ Engine coolant temperature high warning light

This light warns of low engine oil pressure or high engine coolant temperature.

If the light flickers or comes on during normal driving, pull off the road in a safe area, stop the engine and allow it to cool. If the light remains on after checking the oil and coolant, stop the engine **immediately** and call a NISSAN dealer or other authorized repair shop.

**This light is not designed to indicate a low oil or low coolant level.** Check the oil level with the dipstick and check the coolant level on the reservoir. See “Engine oil” and “Checking engine coolant level” in the “Maintenance and do-it-yourself” section of this manual. Also see “If your vehicle overheats” in the “In case of emergency” section of this manual.

**⚠CAUTION**

- **Running the engine with the engine oil pressure warning light on could cause serious damage to the engine almost immediately. Such damage is not covered by warranty. Turn off the engine as soon as it is safe to do so.**
- **If the gauge indicates engine coolant temperature over the normal range, stop the vehicle as soon as safely possible. If the engine is overheated, continued operation of the vehicle may seriously damage the engine. See “If your vehicle overheats” in the “In case of emergency” section for immediate action required.**

## 4WD warning light (4x4 model)

The 4WD warning light comes on when the key switch is turned to ON. It turns off soon after the engine is started.

If the engine or vehicle is not functioning properly, the warning light will either remain illuminated or blink. See “4WD warning light” in the “Starting and driving” section.

**CAUTION**

- **If the warning light comes on or blinks during operation, have your vehicle checked by a NISSAN dealer as soon as possible.**
- **Do not drive on dry hard surface roads in the 4H or 4LO position. If the 4WD warning light turns on when you are driving on dry hard surface roads:**
  - **in the 4H position, shift the 4WD shift switch to 2WD.**
  - **in the 4LO position, stop the vehicle, move the shift selector to the N position with the brake pedal depressed, and shift the 4WD shift switch to 2WD.**
- **If the warning light is still on after the above operation, have your vehicle checked by a NISSAN dealer as soon as possible.**

## Low fuel warning light

This light comes on when the fuel level in the fuel tank is getting low. Refuel as soon as it is convenient, preferably before the fuel gauge reaches E (Empty). **There will be a small reserve of fuel in the tank when the fuel gauge needle reaches E (Empty).**

## Low tire pressure warning light

Your vehicle is equipped with a Tire Pressure Monitoring System (TPMS) that monitors the tire pressure of all tires except the spare.

The low tire pressure warning light warns of low tire pressure or indicates that the TPMS is not functioning properly.

After the ignition switch is placed in the ON position, this light illuminates for about 1 second and turns off.

**Low tire pressure warning:**

**If the vehicle is being driven with low tire pressure, the warning light will illuminate. A CHECK TIRE PRESSURE warning also appears in the vehicle information display. If you select the tire pressure information in the display (if so equipped), the LOW PRESSURE warning message will be displayed. The tire pressure for each tire will also be displayed.**

**When the low tire pressure warning light illuminates, you should stop and adjust the tire pressure of all 4 tires to the recommended COLD tire pressure shown on the Tire and Loading Information label located in the driver’s door opening. The low tire pressure warning light does not automatically turn off when the tire pressure is adjusted. After the tire is inflated to the recommended pressure, the vehicle must be driven at speeds above 16 MPH (25 km/h) to activate the TPMS and turn off the low tire pressure warning light. Use a tire pressure gauge to check the tire pressure.**

The CHECK TIRE PRESSURE warning appears each time the ignition switch is placed in the ON position as long as the low tire pressure warning light remains illuminated.

For additional information, see “Vehicle information display” in the “Instruments and controls” section and “Tire Pressure Monitoring System (TPMS)” in the “Starting and driving” section and in the “In case of emergency” section.

**TPMS malfunction:**

If the TPMS is not functioning properly, the low tire pressure warning light will flash for approximately 1 minute when the ignition switch is placed in the ON position. The light will remain on after the 1 minute. Have the system checked by a NISSAN dealer. The CHECK TIRE PRESSURE warning does not appear if the low tire pressure warning light illuminates to indicate a TPMS malfunction.

For additional information, see “Tire Pressure Monitoring System (TPMS)” in the “Starting and driving” section and “Tire pressure” in the “Maintenance and do-it-yourself” section in this manual.

**⚠WARNING**

- **If the light does not illuminate with the ignition switch in the ON position, have the vehicle checked by a NISSAN dealer as soon as possible.**
- **If the light illuminates while driving, avoid sudden steering maneuvers or abrupt braking, reduce vehicle speed, pull off the road to a safe location and stop the vehicle as soon as possible. Driving with under-inflated tires may permanently damage the tires and increase the likelihood of tire failure. Serious vehicle damage could occur and may lead to an accident and could result in serious personal injury. Check the tire pressure for all four tires. Adjust the tire pressure to the recommended COLD tire pressure shown on the Tire and Loading Information label located in the driver’s door opening to turn the low tire pressure warning light OFF. If the light still comes on while driving after adjusting the tire pressure, a tire may be flat. If you have a flat tire, replace it with a spare tire as soon as possible.**
- **When a spare tire is mounted or a wheel is replaced, tire pressure will not be indicated, the TPMS will not function and the low tire pressure warning light will flash for approximately 1 minute. The light will remain on after 1 minute. Contact your NISSAN dealer as soon as possible for tire replacement and/or system resetting.**
- **Replacing tires with those not originally specified by NISSAN could affect the proper operation of the TPMS.**

**⚠CAUTION**

- **The TPMS is not a substitute for the regular tire pressure check. Be sure to check the tire pressure regularly.**
- **If the vehicle is being driven at speeds of less than 16 MPH (25 km/h), the TPMS may not operate correctly.**
- **Be sure to install the specified size of tires to the 4 wheels correctly.**

### Master warning light (if so equipped)

This light comes on when various vehicle information display warnings appear.

- No key warning
- Low fuel warning
- Low windshield-washer fluid warning
- Parking brake release warning
- Door open warning
- Loose fuel cap warning
- Check tire pressure warning

### Seat belt warning light and chime

The light and chime remind you to fasten your seat belts. The light illuminates whenever the ignition switch is placed in the ON or START position and remains illuminated until the driver's seat belt is fastened. At the same time, the chime sounds for about 6 seconds unless the driver's seat belt is securely fastened.

The seat belt warning light may also illuminate if the front passenger's seat belt is not fastened when the front passenger's seat is occupied . For 7 seconds after the ignition switch is placed in the ON position, the system does not activate the warning light for the front passenger.

Refer to "Seat belts" in the "Safety—Seats, seat belts and supplemental restraint system" section for precautions on seat belt usage.

### Supplemental air bag warning light

When the ignition switch is placed in the ON or START position, the supplemental air bag warning light illuminates for about 7 seconds and then turns off. This means the system is operational.

If any of the following conditions occur, the front air bag, side air bag, curtain and rollover air bag, and pretensioner systems need servicing and your vehicle must be taken to a NISSAN dealer:

- The supplemental air bag warning light remains on after approximately 7 seconds.
- The supplemental air bag warning light flashes intermittently.
- The supplemental air bag warning light does not come on at all.

Unless checked and repaired, the supplemental restraint system (air bag system) and/or the seat belts with pretensioner system may not function properly. For additional details see "Supplemental restraint system" in the "Safety—Seats, seat belts and supplemental restraint system" section of this manual.

**WARNING**

**If the supplemental air bag warning light is on, it could mean that the front air bag, side air bag, curtain and rollover air bag and/or pretensioner systems will not operate in an accident. To help avoid injury to yourself or others, have your vehicle checked by a NISSAN dealer as soon as possible.**

## INDICATOR LIGHTS

For additional information on warnings and indicators, see "Vehicle information display" later in this section.

### Electronic locking rear differential (E-Lock) system on indicator light (if so equipped)

This light comes on when the electronic locking rear differential (E-Lock) system clutch is fully engaged.

The indicator light flashes when the system is first turned on. When the system fully engages, the

light remains on. If the switch is on and the indicator light continues to flash, the system is not engaged.

For additional information, see “Electronic locking rear differential (E-Lock) system switch” later in this section and “Electronic locking rear differential (E-Lock) system” in the “Starting and driving” section of this manual.

## Front passenger air bag status light

The front passenger air bag status light will be lit and the passenger front air bag will be OFF depending on how the front passenger seat is being used.

For front passenger air bag status light operation, see “Front passenger air bag and status light” in the “Safety — Seats, seat belts and supplemental restraint system” section of this manual.

## High beam indicator light (blue)

This blue light comes on when the headlight high beams are on and goes out when the low beams are selected.

The high beam indicator light also comes on when the passing signal is activated.

## Malfunction Indicator Light (MIL)

If this indicator light comes on steady or blinks while the engine is running, it may indicate a potential emission control malfunction.

The Malfunction Indicator Light may also come on steady if the fuel-filler cap is loose or missing, or if the vehicle runs out of fuel. Check to make sure the fuel-filler cap is installed and closed tightly, and that the vehicle has at least 3 gallons (11.4 liters) of fuel in the fuel tank.

After a few driving trips, the light should turn off if no other potential emission control system malfunction exists.

If this indicator light comes on steady for 20 seconds and then blinks for 10 seconds when the engine is not running, it indicates that the vehicle is not ready for an emission control system inspection/maintenance test. See “Readiness for inspection/maintenance (I/M) test” in the “Technical and consumer information” section of this manual.

**Operation**

The Malfunction Indicator Light will come on in one of two ways:

- Malfunction Indicator Light on steady — An emission control system malfunction has been detected. Check the fuel-filler cap if the LOOSE FUEL CAP warning appears in the vehicle information display. If the fuel-filler cap is loose or missing, tighten or install the cap and continue to drive the vehicle. The light should turn off after a few driving trips. If the light does not turn off after a few driving trips, have the vehicle inspected by a NISSAN dealer. You do not need to have your vehicle towed to the dealer.
- Malfunction Indicator Light blinking — An engine misfire has been detected which may damage the emission control system. To reduce or avoid emission control system damage:
  - do not drive at speeds above 45 MPH (72 km/h).
  - avoid hard acceleration or deceleration.
  - avoid steep uphill grades.
  - if possible, reduce the amount of cargo being hauled or towed.

The Malfunction Indicator Light may stop blinking and come on steady. Have the vehicle inspected by a NISSAN dealer. You do not need to have your vehicle towed to the dealer.

**⚠ CAUTION**

**Continued vehicle operation without having the emission control system checked and repaired as necessary could lead to poor driveability, reduced fuel economy, and possible damage to the emission control system.**

### Security indicator light (if so equipped)

This light blinks whenever the ignition switch is in the LOCK, OFF or ACC position. This function indicates the security system equipped on the vehicle is operational.

For additional information, see “Security systems” later in this section.

### Slip indicator light

This indicator will blink when the VDC system or the traction control system is operating, thus alerting that the vehicle is nearing its traction limits. The road surface may be slippery.

### Turn signal/hazard indicator lights

The appropriate light flashes when the turn signal switch is activated.

Both lights flash when the hazard switch is turned on.

### Vehicle Dynamic Control (VDC) off indicator light

This indicator light comes on when the Vehicle Dynamic Control off switch is pushed to OFF, the transfer case is in the 4LO position ( 4x4 model), or when the Vehicle Dynamic Control system is not functioning properly. This indicates the Vehicle Dynamic Control system is not operating.

Push the Vehicle Dynamic Control off switch again or restart the engine and the system will operate normally. See “Vehicle Dynamic Control (VDC) system” in the “Starting and driving” section of this manual.

The Vehicle Dynamic Control light also comes on when you place the ignition switch in the ON position. The light will turn off after about 2 seconds if the system is operational. If the light stays on or comes on along with the indicator light while you are driving, have the Vehicle Dynamic Control system checked by a NISSAN dealer.

While the Vehicle Dynamic Control system is operating, you might feel slight vibration or hear the system working when starting the vehicle or accelerating, but this is normal.

The VDC system will be disabled and the VDC light will illuminate when the electronic locking rear differential (E-lock) system switch (if so equipped) is turned on and the E-lock system is engaged. If the E-lock system disengages or the switch is turned off, the VDC system will be enabled and the VDC light will turn off.

## AUDIBLE REMINDERS

### Brake pad wear warning

The disc brake pads have audible wear warnings. When a disc brake pad requires replacement, it makes a high pitched scraping sound when the vehicle is in motion, whether or not the brake pedal is depressed. Have the brakes checked as soon as possible if the warning sound is heard.

### Key reminder chime

A chime sounds if the driver’s door is opened while the key is left in the ignition switch. Remove the key and take it with you when leaving the vehicle.

### Light reminder chime

With the ignition switch placed in the OFF position, a chime sounds when the driver’s door is opened if the headlights or parking lights are on.

Turn the headlight control switch off before leaving the vehicle.

## VEHICLE INFORMATION DISPLAY (if so equipped)

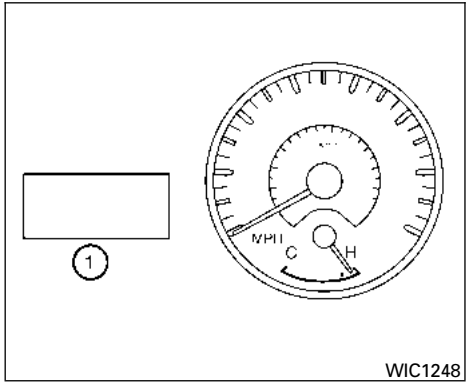

WIC1248

The vehicle information display ① is located to the left of the speedometer. It displays such items as:

- automatic transmission position indicator
- cruise control system information (if so equipped)
- some indicators and warnings

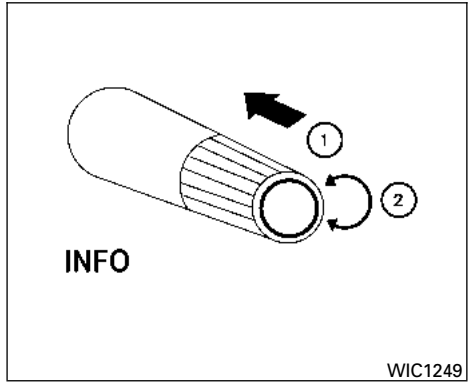

WIC1249

### HOW TO USE THE VEHICLE INFORMATION DISPLAY

Press the vehicle information display INFO button ① located on the instrument panel to toggle through the following modes.

MPG → Range → Warning

Rotate the INFO button ② to highlight the desired menu option within the selected mode. Press the INFO button ① to enter the highlighted menu.

The icons at the bottom of the display screen show the options available:

ENTER — Press the INFO button to select a highlighted option.

NEXT — Rotate the INFO button to highlight an option.

WIC1166

**Warning mode (if so equipped)**

The warning mode can be selected to view any warnings that may be present. Once the screen is selected you have the option of skipping the warning or viewing it in detail.

Warnings can be present for issues such as an open door or low fuel. For more information about potential warnings, see “Vehicle information display warnings and indicators” later in this section.

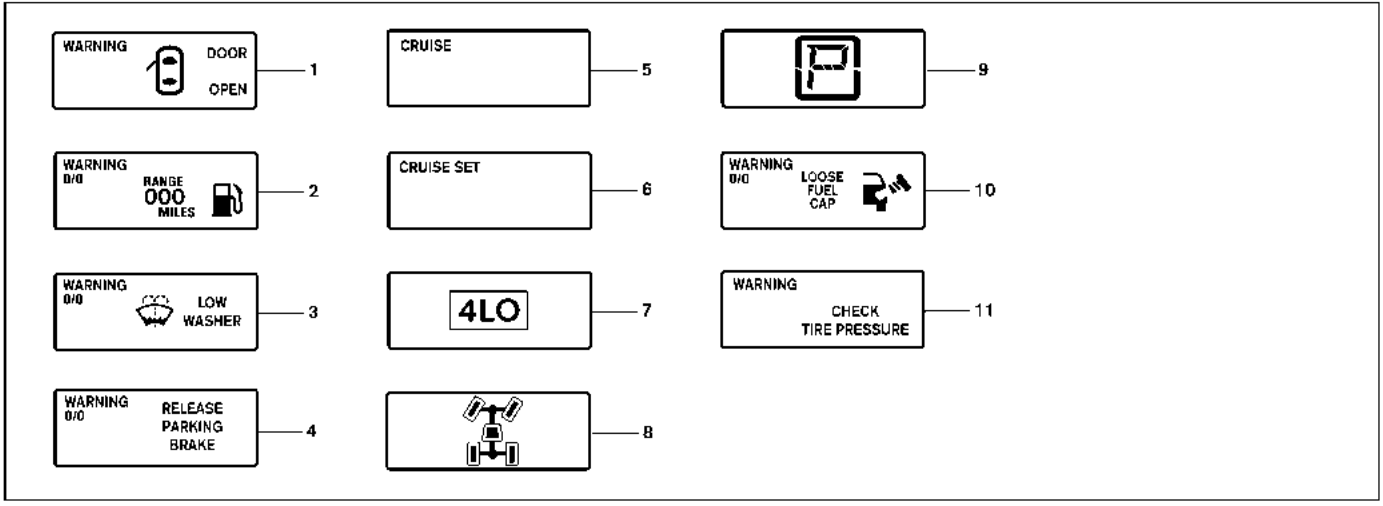


LIC2006

## Vehicle information display warnings and indicators

1. Door open warning
2. Low fuel warning
3. Low windshield-washer fluid warning
4. Parking brake warning
5. Cruise main switch indicator (if so equipped)
6. Cruise set switch indicator (if so equipped)
7. Transfer 4LO position indicator ( 4x4 model)
8. 4WD shift indicator ( 4x4 model)
9. Automatic transmission position indicator
10. Loose fuel cap warning
11. Check tire pressure warning

### Door open warning

This warning illuminates when a door has been opened and the engine is running.

### Low fuel warning

This warning illuminates when the fuel level in the fuel tank is getting low. Refuel as soon as it is convenient, preferably before the fuel gauge reaches E (Empty). **There will be a small reserve of fuel in the tank when the fuel gauge needle reaches E (Empty).**

### Low windshield-washer fluid warning

This warning illuminates when the windshield-washer fluid is at a low level. Add windshield-washer fluid as necessary. See "Windshield-washer fluid" in the "Maintenance and do-it-yourself" section of this manual.

### Parking brake warning

This warning illuminates when the parking brake is set and the vehicle is driven.

### Cruise main switch indicator (if so equipped)

This indicator illuminates when the cruise control main switch is pushed. The indicator turns off when the main switch is pushed again. When the cruise main switch indicator illuminates, the cruise control system is operational.

### Cruise set switch indicator (if so equipped)

This indicator illuminates while the vehicle speed is controlled by the cruise control system. If the indicator blinks while the engine is running, it may indicate the cruise control system is not functioning properly. Have the system checked by a NISSAN dealer.

### Transfer 4LO position indicator ( 4X4 model)

This indicator illuminates when the 4WD shift switch is set in the 4LO position with the ignition switch placed in the ON position.

If the 4WD shift switch is set in the 4LO position and the indicator blinks, stop the vehicle, drive slowly forward and the indicator will turn on.

When you shift between 4H and 4LO, stop the vehicle, move the shift selector to the N (Neutral) position, then depress and turn the 4WD shift switch to 4LO or 4H.

The transfer case may be damaged if you shift the switch while driving.

You cannot move the transfer 4WD shift switch between 4H and 4LO unless you have first stopped the vehicle and moved the shift selector to N (Neutral). Make sure the transfer 4LO position indicator illuminates when you shift the 4WD shift switch to 4LO.

**The indicator may blink while shifting from one drive mode to the other.**

### 4WD shift indicator ( 4X4 model)

While the engine is running, the 4WD shift indicator will illuminate the position selected by the 4WD shift switch.

**The 4WD shift indicator may blink while shifting from one drive mode to the other.**

### Automatic transmission position indicator

When the ignition switch is placed in the ON position, this indicator shows the shift selector position. See "Driving the vehicle" in the "Starting and driving" section of this manual.

### Loose fuel cap warning

This warning appears when the fuel-filler cap is not tightened correctly after the vehicle has been refueled. See "Fuel-filler cap" in the "Pre-driving checks and adjustments" section.

### Check tire pressure warning

This warning appears when the low tire pressure warning light in the meter illuminates and low tire pressure is detected. If this warning appears, stop the vehicle and adjust the tire pressure to the recommended COLD tire pressure shown on the Tire and Loading Information label. See “Low tire pressure warning light” earlier in this section and “Tire Pressure Monitoring System (TPMS)” in the “Starting and driving” section.

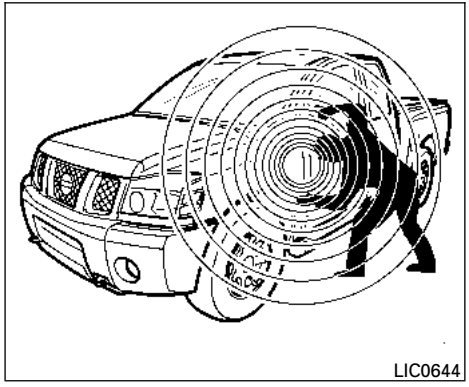


Your vehicle may have two types of security systems:

- Vehicle security system (if so equipped)
- NISSAN Vehicle Immobilizer System (if so equipped)

## VEHICLE SECURITY SYSTEM (if so equipped)

The vehicle security system provides visual and audible alarm signals if someone opens the doors when the system is armed. It is not, however, a motion detection type system that activates when a vehicle is moved or when a vibration occurs.

The system helps deter vehicle theft but cannot prevent it, nor can it prevent the theft of interior or exterior vehicle components in all situations. Always secure your vehicle even if parking for a brief period. Never leave your keys in the ignition, and always lock the vehicle when unattended. Be aware of your surroundings, and park in secure, well-lit areas whenever possible.

Many devices offering additional protection, such as component locks, identification markers, and tracking systems, are available at auto supply stores and specialty shops. Your NISSAN dealer may also offer such equipment. Check with your insurance company to see if you may be eligible for discounts for various theft protection features.

### How to arm the vehicle security system

1. Close all windows. **(The system can be armed even if the windows are open.)**
2. Remove the from the ignition switch.
3. Close all doors. Lock all doors. The doors can be locked with the key, power door lock switch (if the door is opened, locked and then closed), or with the keyfob.

Keyfob operation:

- Push the button on the keyfob. All doors lock. The hazard lights flash twice and the horn beeps once to indicate all doors are locked.
- When the button is pushed with all doors locked, the hazard lights flash twice and the horn beeps once as a reminder that the doors are already locked.

The horn may or may not beep. Refer to "Silencing the horn beep feature" (vehicles without navigation system) in the "Pre-driving checks and adjustments" section or "Vehicle electronic systems" (vehicles with navigation system) in the "Display screen, heater, air conditioner, audio and phone systems" section.

4. Confirm that the indicator light comes on. The light stays on for about 30 seconds. The vehicle security system is now pre-armed. After about 30 seconds the vehicle security system automatically shifts into the armed phase. The light begins to flash once every 3 seconds. If, during the 30-second pre-arm time period, the door is unlocked by the key or the keyfob, or the ignition switch is placed to ACC or ON, the system will not arm.

- **If the key is turned slowly when locking the door, the system may not arm. Furthermore, if the key is turned beyond the vertical position toward the unlock position to remove the key, the system may be disarmed when the key is removed. If the indicator light fails to glow for a period of time, unlock the door once and lock it again.**
- **Even when the driver and/or passengers are in the vehicle, the system will arm with all doors closed and locked with the ignition switch in the OFF position.**
- **The lockable bedside storage compartment (if so equipped) is not protected by the vehicle security system.**

### Vehicle security system activation

The vehicle security system will give the following alarm:

- The headlights blink and the horn sounds intermittently.
- The alarm automatically turns off after a period of time. However, the alarm reactivates if the vehicle is tampered with again. The alarm can be shut off by unlocking the driver's door with the key or by pressing the button on the keyfob.

The alarm is activated by:

- opening a door without using the key or keyfob (even if the door is unlocked by using the inside lock knob or the power door lock switch).

### How to stop an activated alarm

The alarm stops only by unlocking the driver's door with the key or by pressing the button on the keyfob.

## NISSAN VEHICLE IMMOBILIZER SYSTEM (if so equipped)

The NISSAN Vehicle Immobilizer System will not allow the engine to start without the use of a registered key.

If the engine fails to start using a registered key (for example, when interference is caused by another registered key, an automated toll road device or automatic payment device on the key ring), restart the engine using the following procedures:

1. Leave the ignition switch in the ON position for approximately 5 seconds.
2. Turn the ignition switch to the OFF or LOCK position, and wait approximately 10 seconds.

3. Repeat steps 1 and 2.
4. Restart the engine while holding the device (which may have caused the interference) separate from the registered key.

If the no start condition re-occurs, NISSAN recommends placing the registered key on a separate key ring to avoid interference from other devices.

**Statement related to Section 15 of FCC Rules for NISSAN Vehicle Immobilizer System (CONT ASSY — IMMOBILIZER, ANT ASSY — IMMOBILIZER)**

**This device complies with part 15 of the FCC Rules and RSS-210 of Industry Canada. Operation is subject to the following two conditions;**

**(1) This device may not cause harmful interference, and (2) this device must accept any interference received, including interference that may cause undesired operation of the device.**

**CHANGES OR MODIFICATIONS NOT EXPRESSLY APPROVED BY THE PARTY RESPONSIBLE FOR COMPLIANCE COULD VOID THE USER'S AUTHORITY TO OPERATE THE EQUIPMENT.**

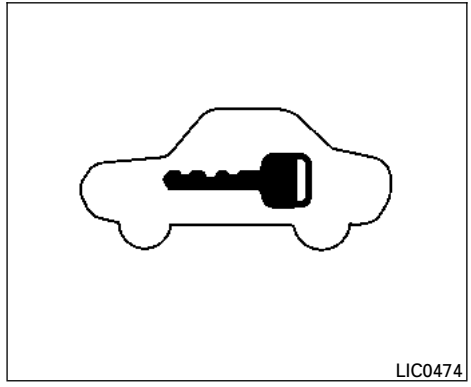
LIC0474

## Security indicator light

The security indicator light blinks whenever the ignition switch is placed in the LOCK, OFF or ACC position. This function indicates the NISSAN Vehicle Immobilizer System is operational.

If the NISSAN Vehicle Immobilizer System is malfunctioning, the light will remain on while the ignition switch is placed in the ON position.

**If the light still remains on and/or the engine will not start, see a NISSAN dealer for NISSAN Vehicle Immobilizer System service as soon as possible. Please bring all registered keys that you have when visiting your NISSAN dealer for service.**

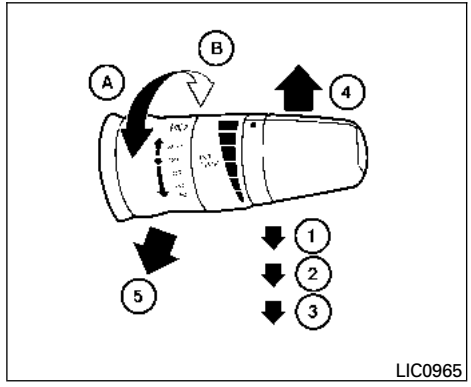

LIC0965

## SWITCH OPERATION

The windshield wiper and washer operates when the ignition switch is in the ON position.

Push the lever down to operate the wiper at the following speed:

① Intermittent (INT) — intermittent operation can be adjusted by turning the knob toward Ⓐ (Slower) or Ⓑ (Faster). Also, the intermittent operation speed varies in accordance with the vehicle speed. (For example, when the vehicle speed is high, the intermittent operation speed will be faster.)

**NOTE:**

**You can turn on or turn off the driving speed dependent intermittent wiper function for vehicles with navigation system. Refer to "Vehicle electronic systems" in the "Display screen, heater, air conditioner, audio and phone systems" section later in this manual.**

② Low (LO) — continuous low speed operation

③ High (HI) — continuous high speed operation

Push the lever up ④ to have one sweep operation (MIST) of the wiper.

Pull the lever toward you ⑤ to operate the washer. The wiper will also operate several times.

**⚠WARNING**

**In freezing temperatures the washer solution may freeze on the windshield and obscure your vision which may lead to an accident. Warm the windshield with the defroster before you wash the windshield.**

**⚠CAUTION**

- **Do not operate the washer continuously for more than 30 seconds.**
- **Do not operate the washer if the windshield-washer reservoir is empty.**
- **Do not fill the windshield-washer reservoir with washer fluid concentrates at full strength. So methyl alcohol based windshield-washer fluid concentrates may permanently stain the grille if spilled with filling the windshield-washer fluid reservoir.**
- **Pre-mix windshield-washer fluid concentrates with water to the manufacturer's recommended levels before pouring the fluid into the windshield-washer reservoir. Do not use the windshield-washer reservoir to mix the windshield-washer fluid concentrate and water.**

## REAR WINDOW AND OUTSIDE MIRROR (if so equipped) DEFROSTER SWITCH

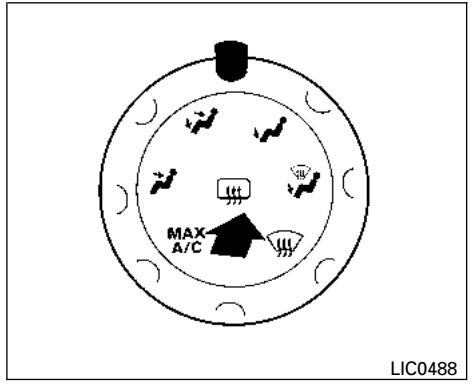


**Type A**

To defrost the rear window glass and outside mirrors (if so equipped), start the engine and push the rear window defroster switch on. The rear window defroster indicator light on the switch comes on. Push the switch again to turn the defroster off.

The rear window defroster automatically turns off after approximately 15 minutes.

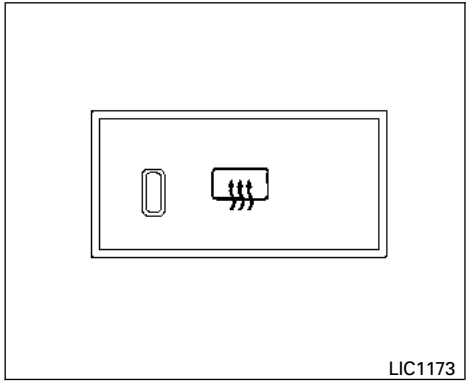


**Type B**

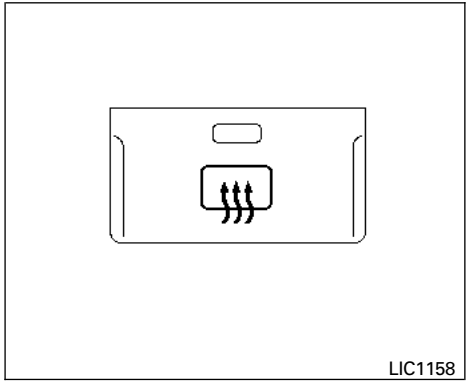


**Type C**

**NOTE:**

**If the rear power window (if so equipped) is lowered while the defroster switch is on, the rear window defroster will automatically shut off. The heated outside mirrors (if so equipped) will remain on. The rear window defroster will automatically turn on when the rear power window is fully closed if the switch is on.**

**⚠ CAUTION**

**When cleaning the inner side of the rear window, be careful not to scratch or damage the rear window defroster.**

## HEADLIGHT AND TURN SIGNAL SWITCH

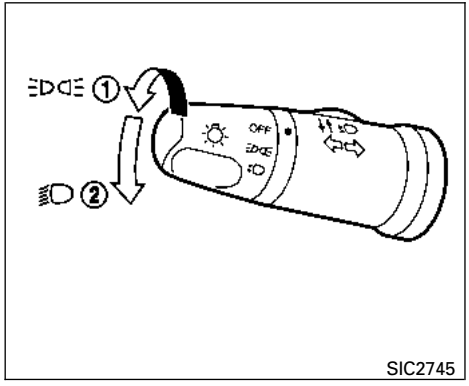


SIC2745

**Type A**

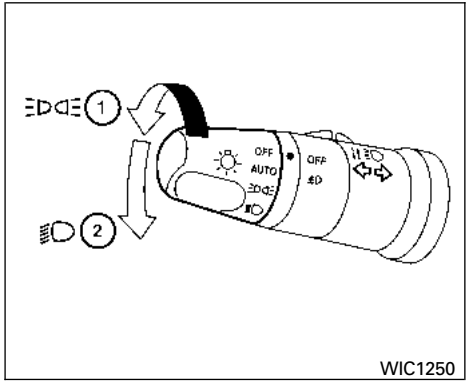


WIC1250

**Type B**

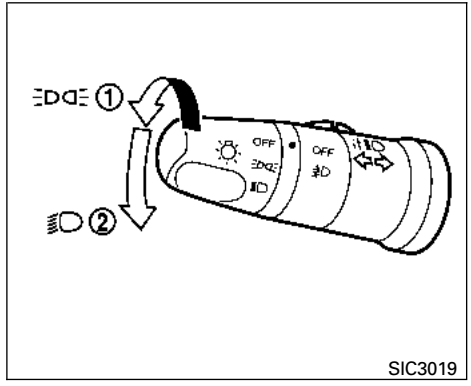


SIC3019

**Type C**

### HEADLIGHT CONTROL SWITCH

#### Lighting

① When turning the switch to the position, the front parking, tail, license plate and instrument panel lights come on.

② When turning the switch to the position, the headlights come on and all the other lights remain on.

**CAUTION**

**Use the headlights with the engine running to avoid discharging the vehicle battery.**

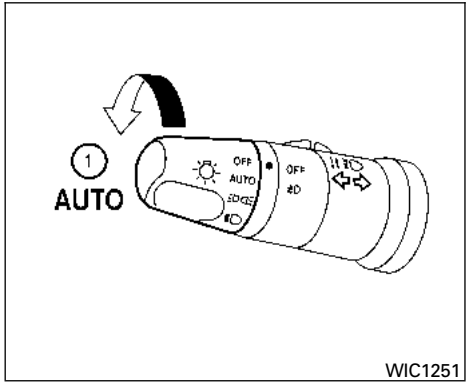

WIC1251

## Autolight system (if so equipped)

The autolight system allows the headlights to be set so they turn on and off automatically. The autolight system can:

- Turn on the headlights, front parking, tail, license plate and instrument panel lights automatically when it is dark.
- Turn off all the lights when it is light.
- Keep all the lights on for a period of time after you place the ignition switch in the OFF position and all doors are closed.

To turn on the autolight system:

1. Turn the headlight switch to the AUTO position ①.
2. Place the ignition switch in the ON position.
3. The autolight system automatically turns the headlights on and off.

Initially, if the ignition switch is placed in the OFF position and a door is opened and left open, the headlights remain ON for a period of time. If another door is opened while the headlights are on, then the timer is reset.

To turn the autolight system off, turn the switch to the OFF, , or position.

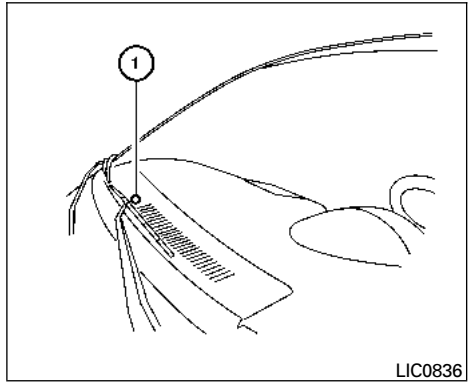

LIC0836

**Be sure you do not put anything on top of the autolight sensor ① located on the top side of the instrument panel. The autolight sensor controls the autolight; if it is covered, the autolight sensor reacts as if it is dark out and the headlights will illuminate. If this occurs while parked with the engine off and the ignition switch placed in the ON position, your vehicle's battery could become discharged.**

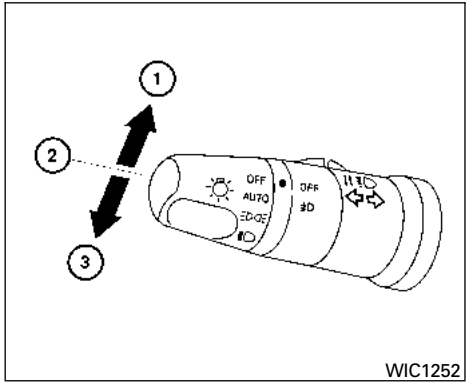

WIC1252

## Headlight beam select

① To select the high beam function, push the lever forward. The high beam lights come on and the light illuminates.

② Pull the lever back to select the low beam.

③ Pulling and releasing the lever flashes the headlight high beams on and off.

## Battery saver system

If the ignition switch is placed in the OFF position while the headlight switch is in the or position, the headlights will turn off after a period of time.

After the headlights automatically turn off with the headlight switch in the or position, the headlights will illuminate again if the headlight switch is moved to the OFF position and then turned to the or position.

**CAUTION**

**Even though the battery saver feature automatically turns off the headlights after a period of time, you should turn the headlight switch to the OFF position when the engine is not running to avoid discharging the vehicle battery.**

## DAYTIME RUNNING LIGHT SYSTEM (Canada only)

The headlights automatically illuminate at a reduced intensity when the engine is started with the parking brake released. The daytime running lights operate with the headlight switch in the OFF position or in the position. Turn the headlight switch to the position for full illumination when driving at night.

If the parking brake is applied before the engine is started, the daytime running lights do not illuminate. The daytime running lights illuminate when the parking brake is released. The daytime running lights will remain on until the ignition switch is placed in the OFF position.

**WARNING**

**When the daytime running light system is active, tail lights on your vehicle are not on. It is necessary at dusk to turn on your headlights. Failure to do so could cause an accident injuring yourself and others.**

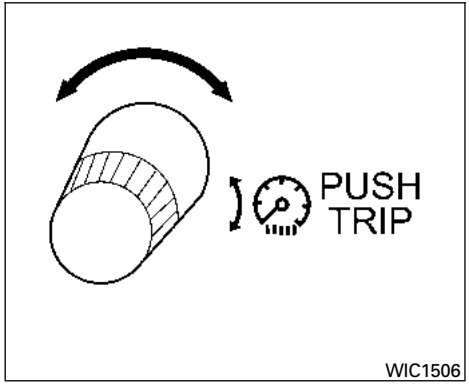


## INSTRUMENT BRIGHTNESS CONTROL

The instrument brightness control operates when the headlight control switch is in the , or AUTO position (with auto-lights activated).

Turn the control to adjust the brightness of instrument panel lights when driving at night.

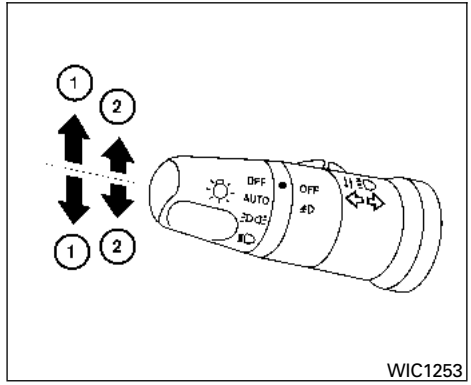


## TURN SIGNAL SWITCH

### Turn signal

① Move the lever up or down to signal the turning direction. When the turn is completed, the turn signals cancel automatically.

### Lane change signal

② To signal a lane change, move the lever up or down to the point where the indicator light begins to flash, but the lever does not latch.

The turn signal will flash three times automatically.

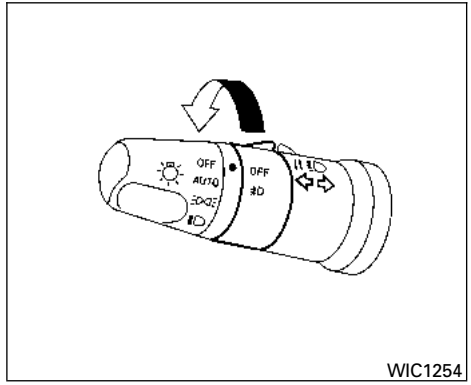


## FOG LIGHT SWITCH (if so equipped)

To turn the fog lights on, turn the headlight switch to the position, then turn the fog light switch to the position.

To turn the fog lights on with the headlight switch in the AUTO position (if so equipped), the headlights must be on, then turn the fog light switch to the position.

To turn the fog lights off, turn the fog light switch to the OFF position.

The headlights must be on and the low beams selected for the fog lights to operate. The fog lights automatically turn off when the high beam headlights are selected.

## HORN

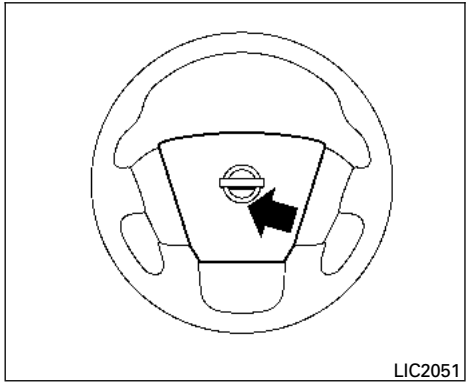


To sound the horn, push near the horn icon of the steering wheel.

**⚠WARNING**

**Do not disassemble the horn. Doing so could affect proper operation of the supplemental front air bag system. Tampering with the supplemental front air bag system may result in serious personal injury.**

## CARGO LAMP SWITCH (if so equipped)

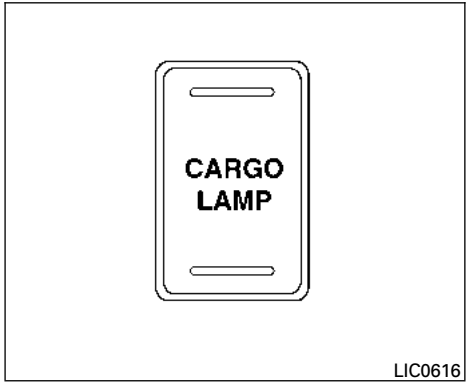


To turn on the cargo lamp, push the switch down to the ON position. The tailgate lights (if so equipped) will also illuminate when the cargo lamp switch is in the ON position.

**⚠CAUTION**

**Be sure to turn the light switch to the OFF position when you leave the vehicle for extended periods of time, otherwise the battery will go dead.**

## HEATED SEATS (if so equipped)

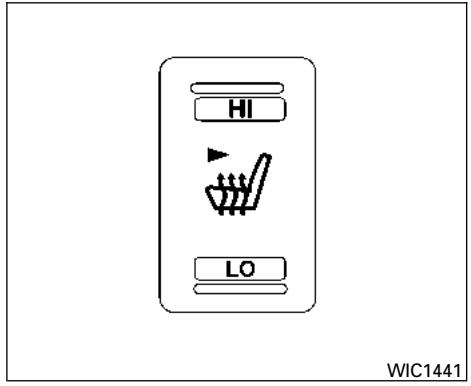


1. Start the engine.
2. Push the LO or HI position of the switch, as desired, depending on the temperature. The indicator light in the switch will illuminate.

   The heater is controlled by a thermostat, automatically turning the heater on and off. The indicator light will remain on as long as the switch is on.
3. When the seat is warmed or before you leave the vehicle, be sure to turn the switch off.

**⚠ WARNING**

**Do not use or allow occupants to use the seat heater if you or the occupants cannot monitor elevated seat temperatures or have an inability to feel pain in body parts that contact the seat. Use of the seat heater by such people could result in serious injury.**

**⚠ CAUTION**

- **Do not use the seat heater for extended periods or when no one is using the seat.**
- **Do not put anything on the seat which insulates heat, such as a blanket, cushion, seat cover, etc. Otherwise, the seat may become overheated.**
- **Do not place anything hard or heavy on the seat or pierce it with a pin or similar object. This may result in damage to the heater.**
- **Any liquid spilled on the heated seat should be removed immediately with a dry cloth.**
- **When cleaning the seat, never use gasoline, benzine, thinner, or any similar materials.**
- **If any malfunctions are found or the heated seat does not operate, turn the switch off and have the system checked by your NISSAN dealer.**
- **The battery could run down if the seat heater is operated while the engine is not running.**

## VEHICLE DYNAMIC CONTROL (VDC) OFF SWITCH

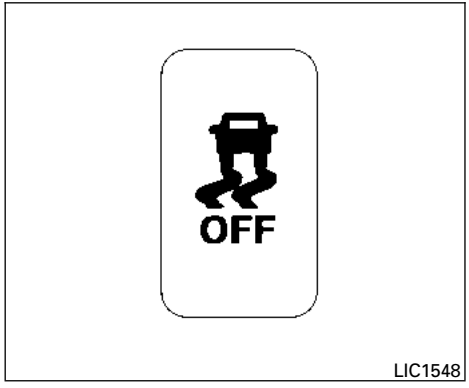

LIC1548

The vehicle should be driven with the Vehicle Dynamic Control (VDC) system on for most driving conditions.

If the vehicle is stuck in mud or snow, the VDC system reduces the engine output to reduce wheel spin. The engine speed will be reduced even if the accelerator is depressed to the floor. If maximum engine power is needed to free a stuck vehicle, turn the VDC system off.

To turn off the VDC system, push the VDC OFF switch. The indicator will come on.

Push the VDC OFF switch again or restart the engine to turn on the system. See "Vehicle Dynamic Control (VDC) system" in the "Starting and driving" section.

## ELECTRONIC LOCKING REAR DIFFERENTIAL (E-Lock) SYSTEM SWITCH (if so equipped)

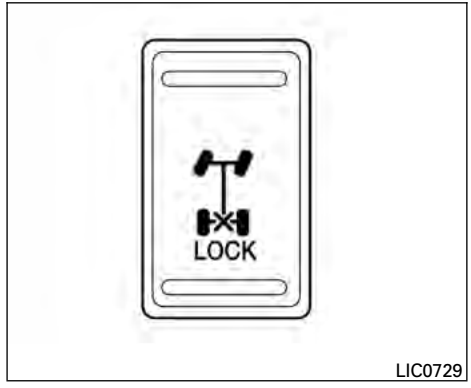

LIC0729

The Electronic Locking Rear Differential (E-Lock) system can help provide added traction if the vehicle is stuck or becoming stuck.

To activate the E-Lock system:

- the 4WD switch must be in the 4LO position (4-wheel drive vehicles),
- the vehicle must be stopped or moving at 4 MPH (7 km/h) or less, and
- the E-Lock system switch must be turned ON.

When the E-Lock switch is turned ON, the indicator light will flash until the system engages. However, if all operation conditions listed above are not met or the system becomes disengaged, the indicator light will continue to flash.

The Anti-Lock Brake (ABS) system is disabled and the ABS light illuminates when the E-Lock system is ON. Also, the Vehicle Dynamic Control (VDC) system is disabled and the VDC light illuminates when the E-Lock system is ON.

See "Electronic locking rear differential (E-Lock) system" in the "Starting and Driving" section for further explanation and system limitations.

**WARNING**

- **Never leave the E-Lock system ON when driving on paved or hard-surfaced roads. Turning the vehicle may result in the rear wheels slipping and result in an accident and personal injury. After using the E-Lock system to free the vehicle, turn the system OFF.**

- **Use the E-Lock system only when freeing a stuck vehicle. Try the 4LO position before using the E-Lock system. Never use the E-Lock system on a slippery road surface such as snow or ice surface. Using the E-Lock system when driving in these road conditions may cause unexpected movement of the vehicle during engine braking, accelerating or turning, which may result in an accident and serious personal injury.**

**⚠ CAUTION**

- **After using the E-Lock system, turn the switch OFF to prevent possible damage to driveline components from extended use.**
- **Do not drive over 12 MPH (20 km/h) when the system is engaged. Doing so could result in possible damage to the driveline.**
- **Do not turn on the E-lock system while the tires are spinning. Doing so could damage drivetrain components.**

## POWER INVERTER SWITCH (if so equipped)

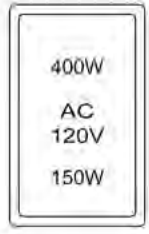

LIC2075

To use the outlets for devices that require 120v power, place the ignition in the ON position and push the power inverter switch.

The 400W or 150W on the switch will illuminate according to the mode selected. Only the 150W is available when the ignition switch is placed in the ON position or while the vehicle is being driven. For more information on using devices that require the power inverter switch activated, see “120v outlets” later in this section.

**⚠ CAUTION**

- **Use power outlets with the engine running to avoid discharging the vehicle battery.**
- **Do not attempt to use this while driving.**
- **Do not use double adapters or more than one electrical accessory, doing so could significantly drain the battery of your vehicle.**

## REAR SONAR SYSTEM OFF SWITCH (if so equipped)

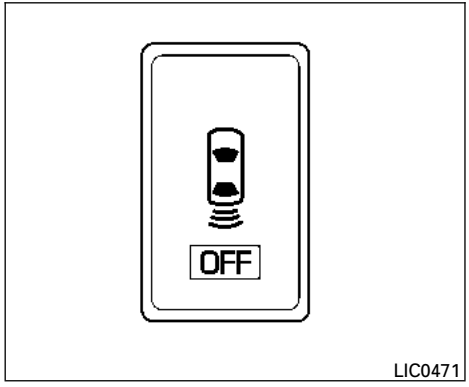


**⚠WARNING**

**The rear sonar system is a convenience but it is not a substitute for proper backing. Always turn and check that it is safe to do so before backing up. Always back up slowly.**

The rear sonar system is active when the ignition switch is placed to the ON position and the shift selector is in R (Reverse).

When sensors detect obstacles within 5.9 ft (1.8 m) of the rear bumper, a beeping tone is emitted.

The rear sonar system can be disabled by pushing the OFF switch. When the system is disabled, the indicator light on the switch will illuminate. Push the switch again to enable the system. The indicator light will go off.

The system will automatically reset the next time the ignition switch is turned on.

See “Rear sonar system” in the “Starting and driving” section.

## TOW MODE SWITCH

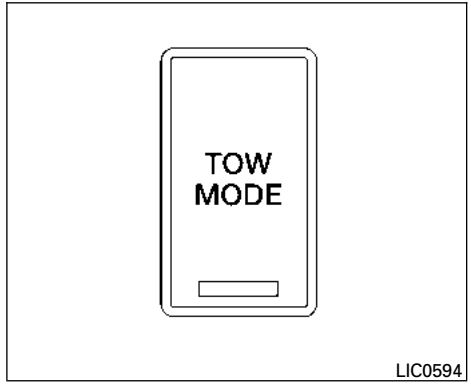


Tow mode should be used when pulling a heavy trailer or hauling a heavy load. Driving the vehicle in the tow mode with no trailer/load or light trailer/light load will not cause any damage. However, fuel economy may be reduced, and the transmission/engine driving characteristics may feel unusual.

Press the tow mode switch to activate tow mode. The indicator light on the tow mode switch illuminates when tow mode is selected. Press the tow mode switch again to turn tow mode OFF.

Tow mode is automatically canceled when the ignition switch is placed in the OFF position.

## POWER OUTLETS

For additional information, refer to “Tow mode” in the “Technical and consumer information” section later in this manual.

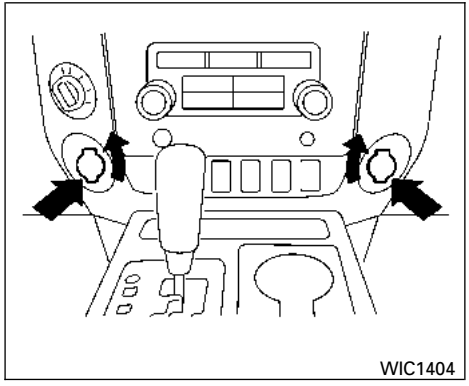


**Front row**

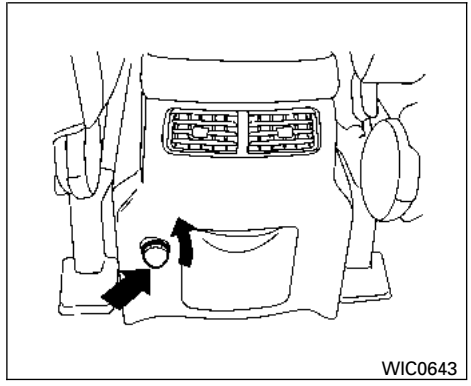


**2nd row (if so equipped)**

12V OUTLETS

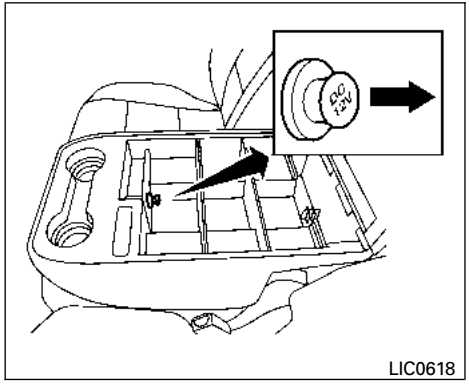


**Inside center armrest (if so equipped)**

The power outlets are for powering electrical accessories such as cellular telephones.

The power outlets located on the driver's side of the instrument panel is powered only when the ignition switch is placed in the ACC or ON position.

The power outlets located on the passenger's side of the instrument panel, and in the 2nd row are powered only when the ignition switch is placed in the ACC or ON position.

Open the cap to use a power outlet.

**⚠CAUTION**

- **The outlet and plug may be hot during or immediately after use.**
- **Only certain power outlets are designed for use with a cigarette lighter unit. Do not use any other power outlet for an accessory lighter. See your NISSAN dealer for additional information.**
- **Do not use with accessories that exceed a 12 volt, 120W (10A) power draw. Do not use double adapters or more than one electrical accessory.**
- **Use power outlets with the engine running to avoid discharging the vehicle battery.**
- **Avoid using power outlets when the air conditioner, headlights or rear window defroster is on.**
- **Before inserting or disconnecting a plug, be sure the electrical accessory being used is turned OFF.**
- **Push the plug in as far as it will go. If good contact is not made, the plug may overheat or the internal temperature fuse may open.**
- **When not in use, be sure to close the cap. Do not allow water or any other liquid to contact the outlet.**

## 120V OUTLET (if so equipped)

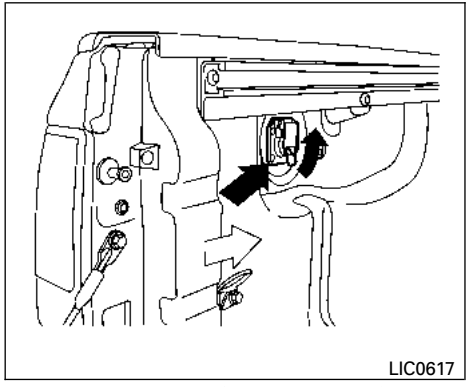


**In truck box (if so equipped)**

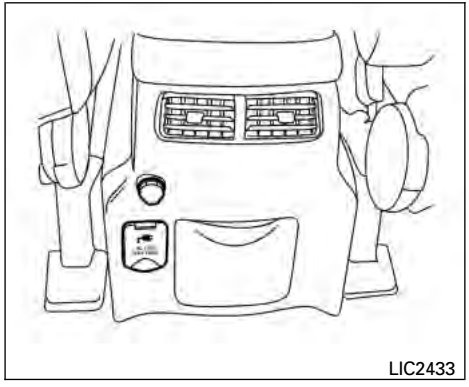


**Center console (if so equipped)**

| | | Before Drive (idling) (Park) | | When shifting out of Park | | When shifting back to (idling) (Park) | | Switch Reset | |
|---|---|---|---|---|---|---|---|---|---|
| **Options** | **What is plugged IN** | **Indicator** | **Inverter Status** | **Indicator** | **Inverter Status** | **Indicator** | **Inverter Status** | **Indicator** | **Inverter Status** |
| | Nothing plugged but switch is on | 150 and 400 | ON | 150 | ON | 150 and 400 | ON | NOT NECESSARY | NOT NECESSARY |
| | Device<150W | 150 and 400 | ON | 150 | ON | 150 and 400 | ON | NOT NECESSARY | NOT NECESSARY |
| | 150W>device<400W | 150 and 400 | ON | OFF | OFF | ON | ON | 150 and 400 | ON |
| | Device>400W | 150 and 400 | OFF | OFF | OFF | OFF | OFF | OFF** | OFF** |

** OFF means that the inverter system cannot be reset until a device that is within the specified range of operation is plugged in. Therefore, the switch indicators and inverter would remain OFF. There may be a very short period of time where the switch indicators are on, but once the inverter reaches it's peak saturation point (temp and power level). it will shut off both the inverter and the switch indicators.

Do not use the outlet located in the truck box with accessories that exceed 120 volt. Do not use double adapters or more than one electrical accessory.

**⚠ CAUTION**

- **Operation of the 120 volt system with the ignition in the ON position and the engine not running (idle) will drain the battery charge. This could lead to a dead battery or no start condition.**
- **The outlet and plug may be hot during or immediately after use.**
- **Use power outlets with the engine running to avoid discharging the vehicle battery.**
- **Do not use double adaptors or more than one electrical accessory.**
- **Avoid using power outlets when the air conditioner, headlights or rear window defroster is on.**
- **Before inserting or disconnecting a plug, be sure the electrical accessory being used is turned OFF.**
- **Push the plug in as far as it will go. If good contact is not made, the plug may overheat or the internal temperature fuse may open.**
- **When not in use, be sure to close the cap. Do not allow water or any other liquid to contact the outlet.**

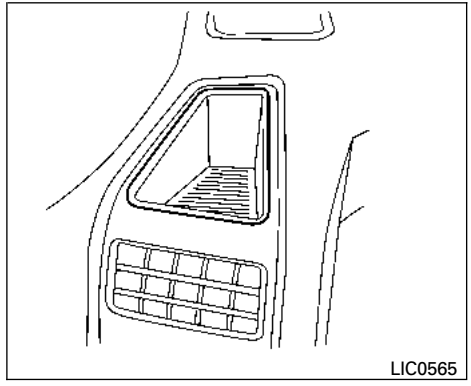


**Side tray**

## INSTRUMENT PANEL STORAGE TRAYS

**⚠ WARNING**

**Do not place sharp objects in the trays to help prevent injury in an accident or sudden stop.**

The rubber mats can be removed for cleaning.

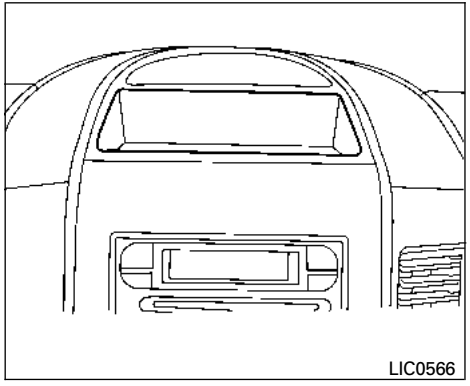


**Center tray (if so equipped)**

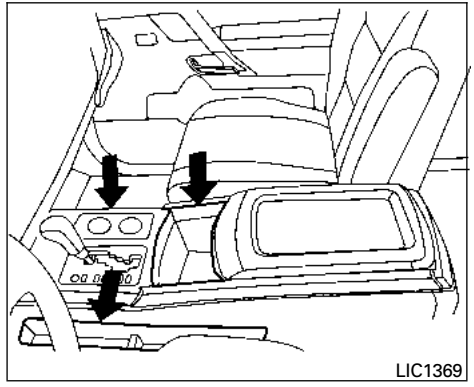


CONSOLE BOX (if so equipped)

Console box storage trays

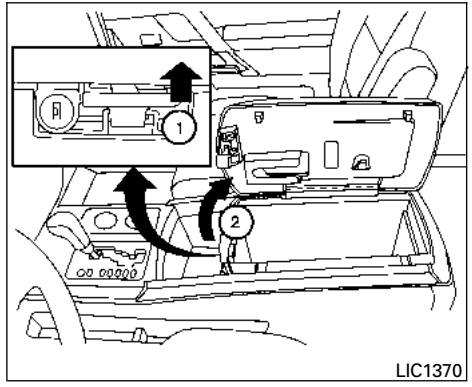


Console box storage

Pull up on the lever ① to open the console box lid ②.

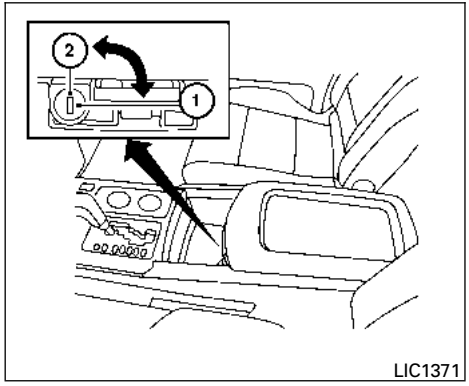


## Console box lock

Use the master key to lock ① or unlock ② the console box.

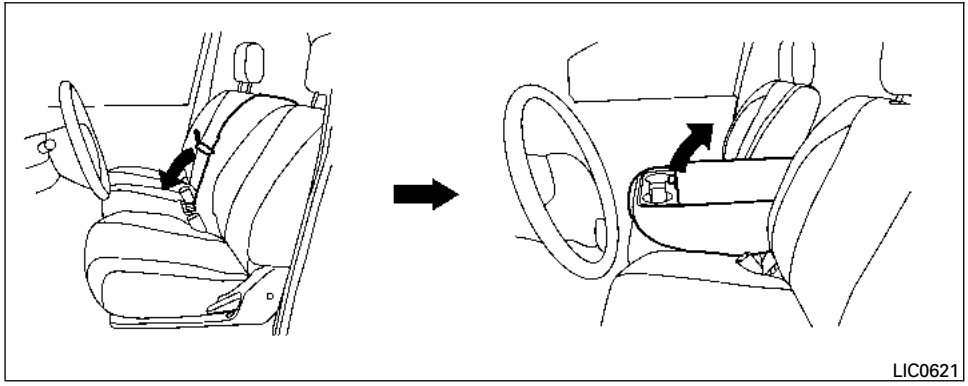


## CENTER ARMREST STORAGE (if so equipped)

To access the center armrest storage area, lower the center armrest and lift the lid.

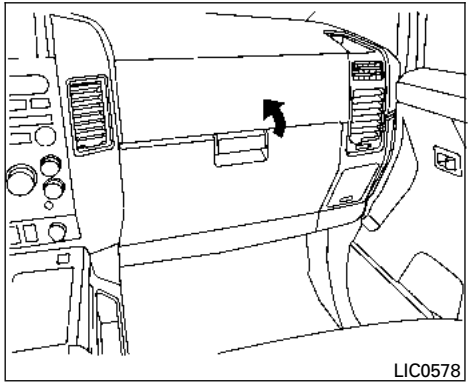


## GLOVE BOX

Open the glove box by pulling the handle.

Use the master key to lock or unlock the glove box lock (if so equipped). The valet key cannot be used.

**⚠WARNING**

**Keep glove box lid closed while driving to help prevent injury in an accident or a sudden stop.**

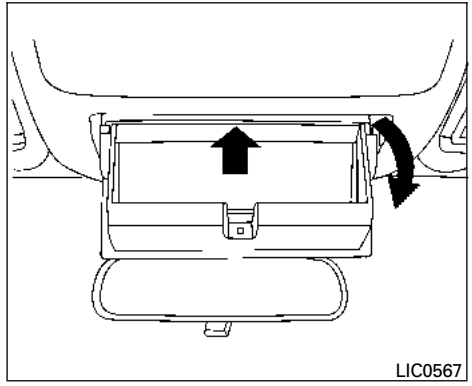


## SUNGLASSES HOLDER (if so equipped)

To open the sunglasses holder, push and release.

**⚠WARNING**

- **Keep the sunglasses holder closed while driving to prevent an accident.**

**⚠CAUTION**

- **Do not leave sunglasses in the sunglasses holder while parking in direct sunlight. The heat may damage the sunglasses.**
- **Do not use for anything other than sunglasses.**

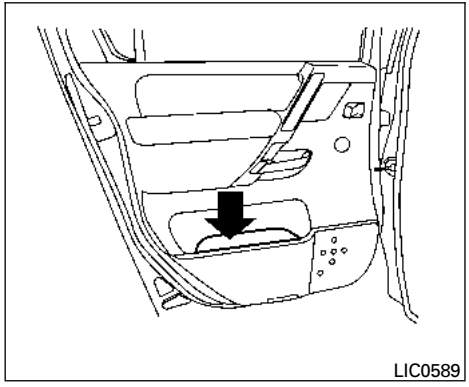


MAP POCKETS

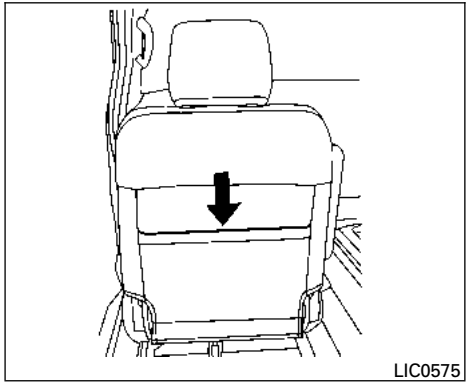


SEATBACK POCKET (if so equipped)

The seatback pocket is located on the back of the driver's seat. The pocket can be used to store maps.

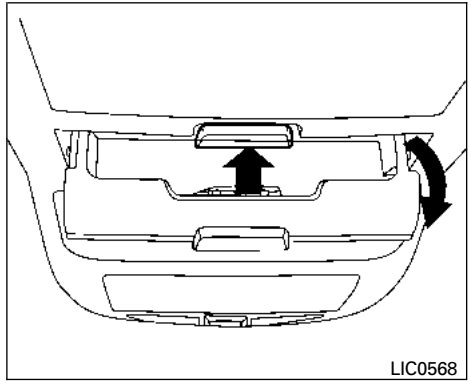


**Small bin (if so equipped)**

OVERHEAD CONSOLE (if so equipped)

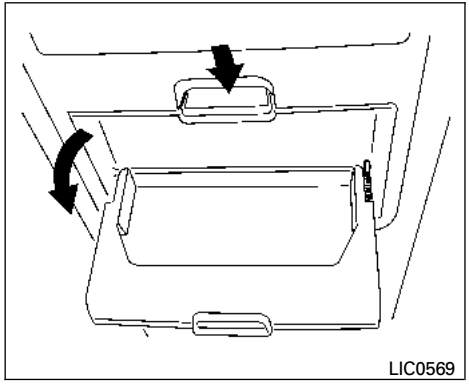


**Medium bin (if so equipped)**

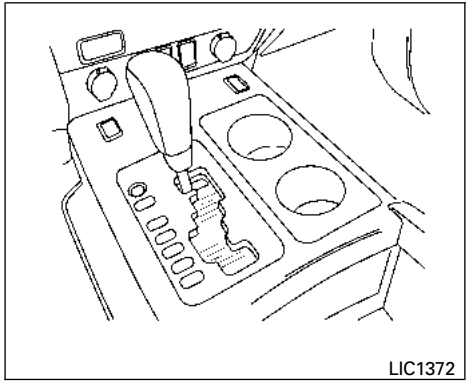


**Front — Type A**

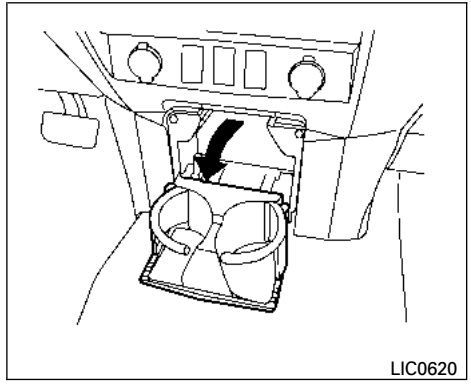


**Front — Type B**

## Storage bins

**⚠WARNING**

**Keep storage bins closed while driving to help prevent injury in an accident or a sudden stop.**

Push the button to open a storage bin.

Push the lid up to close.

## CUP HOLDERS

**⚠CAUTION**

- **Avoid abrupt starting and braking when the cup holder is being used to prevent spilling the drink. If the liquid is hot, it can scald you or your passenger.**
- **Use only soft cups in the cup holder. Hard objects can injure you in an accident.**

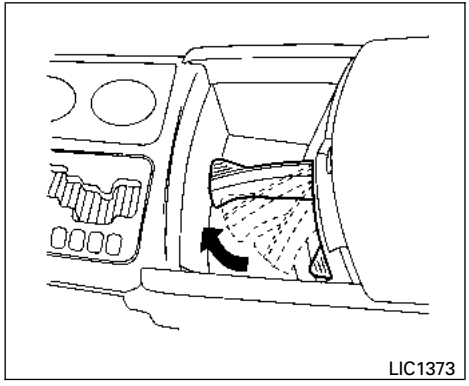


**Adjustable (if so equipped)**

Position the arm on the adjustable cup holder so that the cup is held securely.

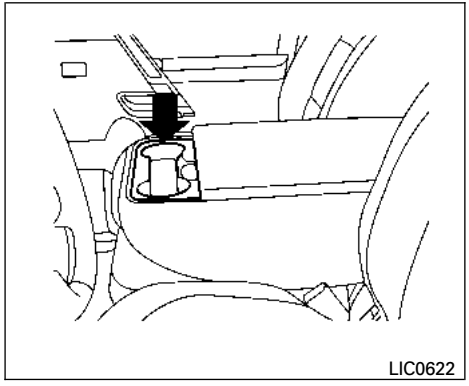


**Armrest (if so equipped)**

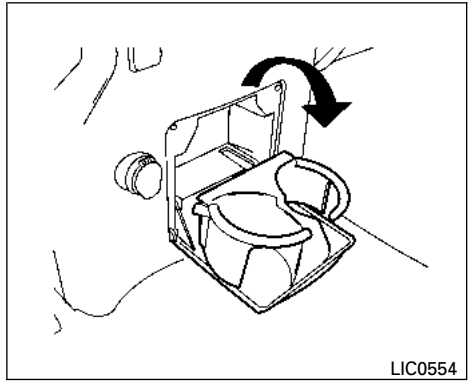


**2nd row (rear of front console) (if so equipped)**

To open the 2nd row cup holders (rear of front console), lower the lid. To close, raise the lid.

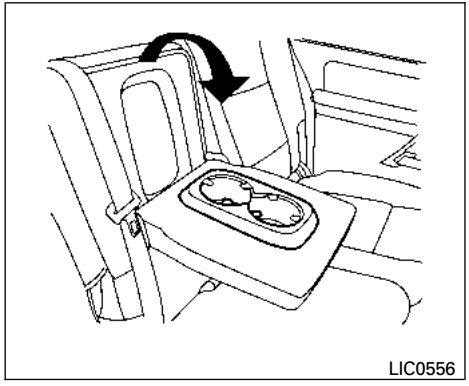


**2nd row bench (if so equipped)**

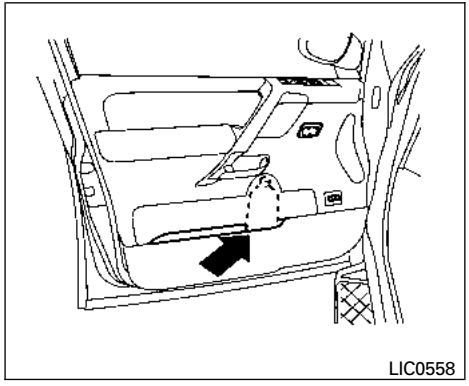


**Bottle holder — Type A**

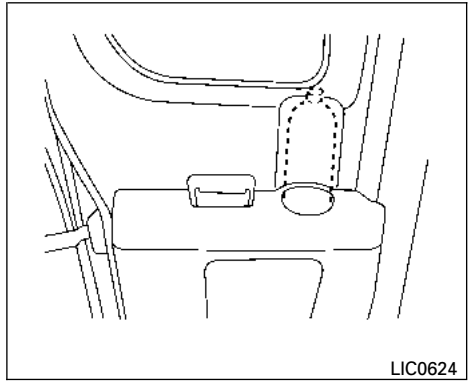


**Bottle holder — Type B**

**⚠CAUTION**

- **Do not use bottle holder for any other objects that could be thrown about in the vehicle and possibly injure people during sudden braking or an accident.**
- **Do not use bottle holder for open liquid containers.**

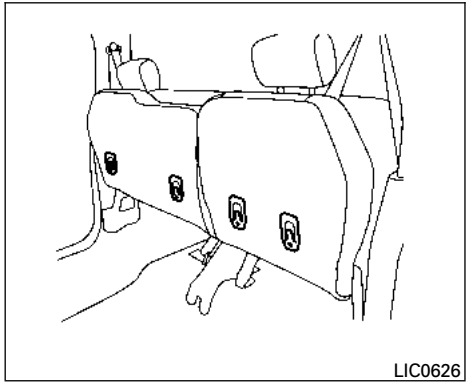


## GROCERY HOOKS (if so equipped)

The grocery hooks allow for standard size plastic grocery bags to hang side by side.

To access the grocery hooks, fold up the rear bench seat. See “Folding the rear bench seat” in the “Safety — Seats, seat belts and supplemental restraint system” section earlier in this manual.

**⚠ CAUTION**

**Do not apply a total load of more than 18 lbs (8 kg) to a single grocery hook.**

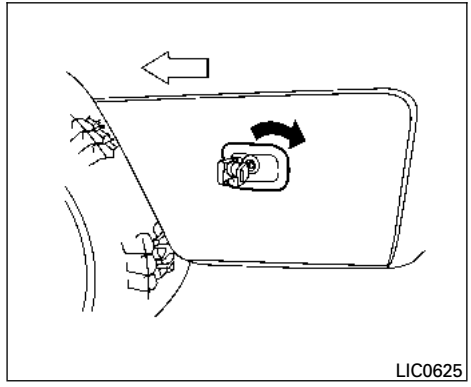


## LOCKABLE BEDSIDE STORAGE COMPARTMENT (if so equipped)

To access the bedside storage compartment, hold the key hole cover open and insert the master key. Turn the key clockwise to unlock the lid.

The tray inside the bedside storage compartment is adjustable.

The bedside storage compartment will automatically lock when the lid is closed. You do not need to use the key.

**⚠ CAUTION**

- **Do not store a total load of more than 22 lbs (10 kg) inside the storage compartment.**
- **Do not use the storage compartment or storage compartment lid as a step. Doing so may damage them.**

## POWER WINDOWS (if so equipped)

**⚠WARNING**

- **Make sure that all passengers have their hands, etc. inside the vehicle while it is in motion and before closing the windows. Use the window lock switch to prevent unexpected use of the power windows.**
- **Do not leave children unattended inside the vehicle. They could unknowingly activate switches or controls and become trapped in a window. Unattended children could become involved in serious accidents.**

The power windows operate when the ignition switch is placed in the ON position, or for a period of time after the ignition switch is placed in the OFF position. If the driver's or passenger's door is opened during this period of time, the power to the windows is canceled.

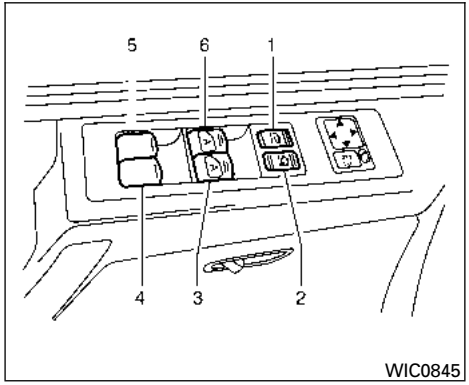


1. Window lock button
2. Power door lock switch
3. Front passenger side automatic switch
4. Right rear passenger window switch
5. Left rear passenger window switch
6. Driver side automatic switch

### Driver's side power window switch

The driver's side control panel is equipped with switches to open or close the front and rear passenger windows.

To open a window, push the switch and hold it down. To close a window, pull the switch and hold it up. To stop the opening or closing function at any time, simply release the switch.

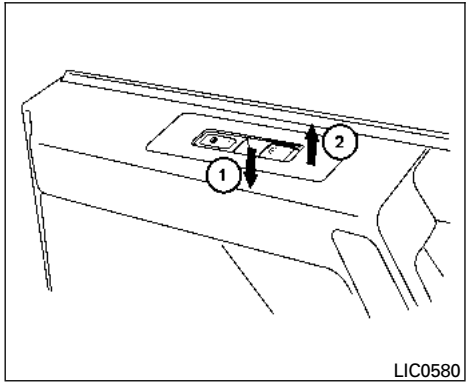


## Front passenger's power window switch

The passenger's window switch operates only the corresponding passenger's window. To open the window, push the switch and hold it down ①. To close the window, pull the switch up ②.

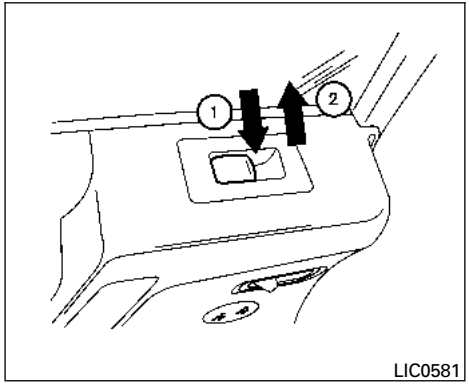


## Rear power window switch

The rear power window switches open or close only the corresponding windows. To open the window, push the switch and hold it down ①. To close the window, pull the switch up ②.

## Locking passengers' windows

When the window lock button is depressed, only the driver's side window can be opened or closed. Push it again to cancel the window lock function.

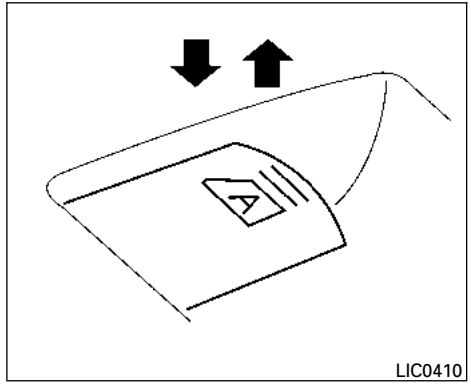


## Automatic operation

To fully open a window equipped with automatic operation, press the window switch down to the second detent and release it; it need not be held. The window automatically opens all the way. To stop the window, lift the switch up while the window is opening.

To fully close a window equipped with automatic operation, pull the switch up to the second detent and release it; it need not be held. To stop the window, press the switch down while the window is closing.

## Auto-reverse function

The auto-reverse function can be activated when a window is closed by automatic operation.

**Depending on the environment or driving conditions, the auto-reverse function may be activated if an impact or load similar to something being caught in the window occurs.**

**⚠WARNING**

**There are some small distances immediately before the closed position which cannot be detected. Make sure that all passengers have their hands, etc., inside the vehicle before closing the window.**

If the vehicle's battery is disconnected, replaced, or jump started, the power window auto-reverse function may not operate properly. If this occurs, please contact the dealer to re-initialize the power window auto-reverse system.

If the control unit detects something caught in a window equipped with automatic operation as it is closing, the window will be immediately lowered.

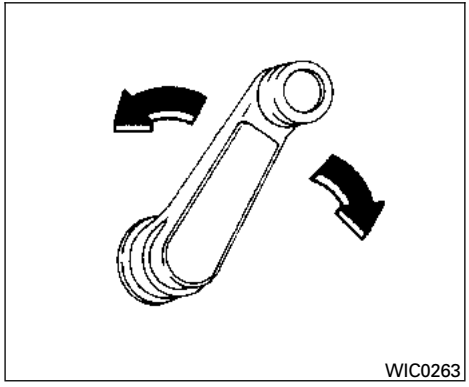


## MANUAL WINDOWS (if so equipped)

The side windows can be opened or closed by turning the hand crank on each door.

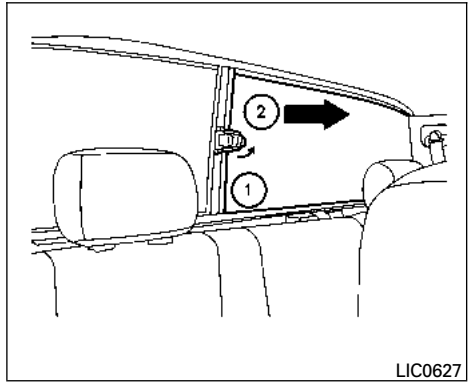


## REAR SLIDING WINDOW (if so equipped)

Squeeze the handles of the lever ①, then slide the window open ②.

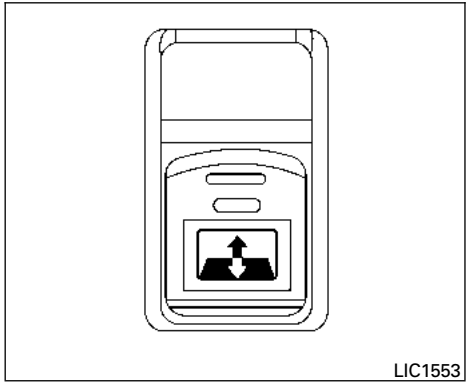


## REAR POWER WINDOW SWITCH (if so equipped)

To open the rear power window, push in and hold the switch.

To close the rear power window, pull out and hold the switch.

To stop the opening or closing function at any time, simply release the switch.

**NOTE:**

**If the rear power window (if so equipped) is lowered while the defroster switch is on, the rear window defroster will automatically shut off. The heated outside mirrors (if so equipped) will remain on. The rear window defroster will automatically turn on when the rear power window is fully closed if the switch is on.**

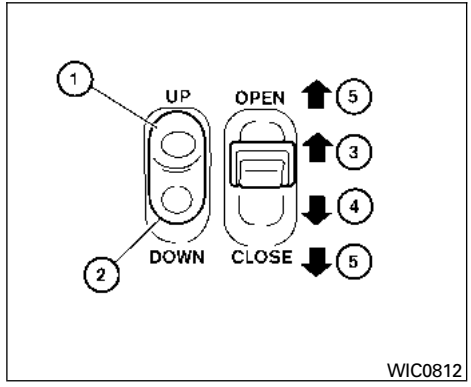


## AUTOMATIC MOONROOF

The moonroof will only operate when the ignition switch is placed in the ON position. The automatic moonroof is operational for a period of time, even if the ignition switch is placed in the ACC or OFF position. If the driver's door or the front passenger's door is opened during this period of time, the power to the moonroof is canceled.

### Sliding the moonroof

To fully open the moonroof, push the switch toward the open position ③.

To fully close the moonroof, push the switch toward the close position ④.

To open or close the moonroof part way, push the switch in any direction ⑤ while the moonroof is sliding open or closed to stop it in the desired position.

## Tilting the moonroof

To tilt the moonroof up, push the tilt switch toward the up position ①.

To tilt the moonroof down, push the tilt switch toward the down position ②.

## Restarting the moonroof sliding switch

The sliding switch will become inoperable after the battery terminal is disconnected, the electrical supply interrupted and/or some abnormality detected. Use the following reset procedure to return moonroof operation to normal.

1. If the moonroof lid is open, push the tilting switch repeatedly toward the down position ② to fully close the lid.
2. Push and hold the tilting switch for more than 2 seconds toward the down position ② to reestablish the lid's home position.

   The moonroof should now operate normally.

## Auto-reverse function (when closing or tilting down the moonroof)

The auto-reverse function can be activated when the moonroof is closed or tilted down by automatic operation when the ignition switch is placed in the ON position or for a period of time after the ignition switch is placed in the OFF position.

**Depending on the environment or driving conditions, the auto-reverse function may be activated if an impact or load similar to something being caught in the moonroof occurs.**

**⚠WARNING**

**There are some small distances immediately before the closed position which cannot be detected. Make sure that all passengers have their hands, etc., inside the vehicle before closing the moonroof.**

**When closing:**

If the control unit detects something caught in the moonroof as it moves to the front, the moonroof will immediately open backward.

**When tilting down:**

If the control unit detects something caught in the moonroof as it tilts down, the moonroof will immediately tilt up.

If the auto-reverse function malfunctions and repeats opening or tilting up the moonroof, keep pushing the tilt down switch within 5 seconds after it happens; the moonroof will fully close gradually. Make sure nothing is caught in the moonroof.

**⚠WARNING**

- **In an accident you could be thrown from the vehicle through an open moonroof. Always use seat belts and child restraints.**
- **Do not allow anyone to stand up or extend any portion of their body out of the moonroof opening while the vehicle is in motion or while the moonroof is closing.**

**⚠CAUTION**

- **Remove water drops, snow, ice or sand from the moonroof before opening.**
- **Do not place heavy objects on the moonroof or surrounding area.**

## Sunshade

Open and close the sunshade by sliding it forward or backward.

## If the moonroof does not close

Have your NISSAN dealer check and repair the moonroof.

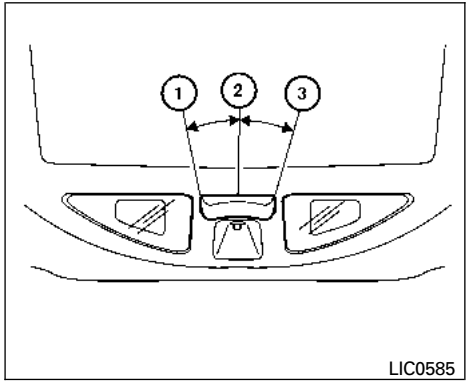


**Type A**

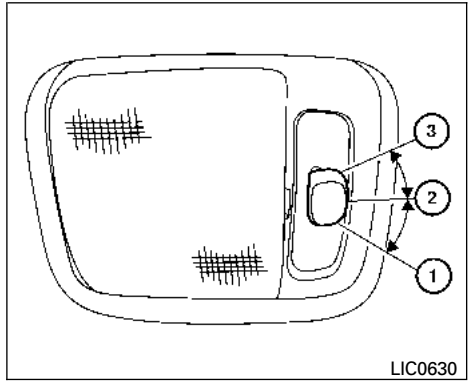


**Type B**

The interior light has a three-position switch and operates regardless of ignition switch position.

When the switch is in the ON position ①, the interior lights illuminate, regardless of door position. The lights will go off after a period of time unless the ignition switch is placed in the ON position.

When the switch is in the DOOR or normal operation position ②, the interior lights, puddle lights (if so equipped) and cargo light will stay on for a period of time when:

- The doors are unlocked by the keyfob, a key or the power door lock switch while all doors are closed and the ignition switch is in the OFF position.
- The driver's door is opened and then closed while the key is removed from the ignition switch.
- The key is removed from the ignition switch while all doors are closed.

The lights will turn off while the timer is activated when:

- The driver's door is locked by the keyfob, a key, or the power door lock switch.
- The ignition switch is turned ON.

When the switch is in the OFF position ③, the interior lights do not illuminate, regardless of door position. The puddle lights (if so equipped) and cargo light come on when any front or rear passenger door is opened.

The lights will turn off automatically after a period of time while doors are open to prevent the battery from becoming discharged.

**NOTE:**

**The door step lights (if so equipped) illuminate when the driver and passenger doors are open regardless of the interior light switch position. These lights will turn off automatically after a period of time while doors are open to prevent the battery from becoming discharged.**

**⚠ CAUTION**

**Do not use for extended periods of time with the engine stopped. This could result in a discharged battery.**

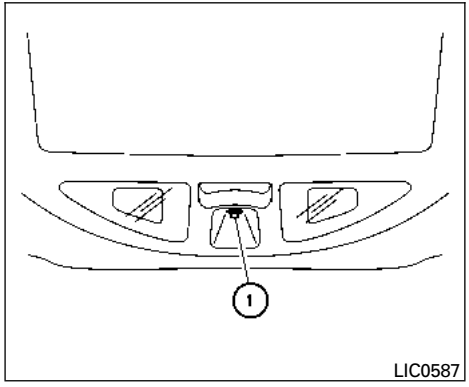

LIC0587

## CONSOLE LIGHT (if so equipped)

The console light ① will turn on whenever the parking lights or headlights are illuminated.

The console light brightness can be adjusted with the illumination brightness control.

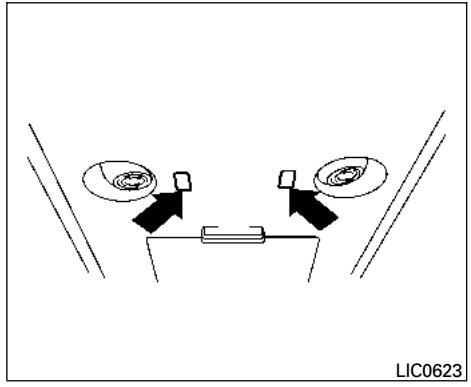
LIC0623

The personal lights on the overhead console can be swiveled 360 degrees. To turn on the light, press the button. Press the button again to turn off the light.

## MAP LIGHTS (if so equipped)

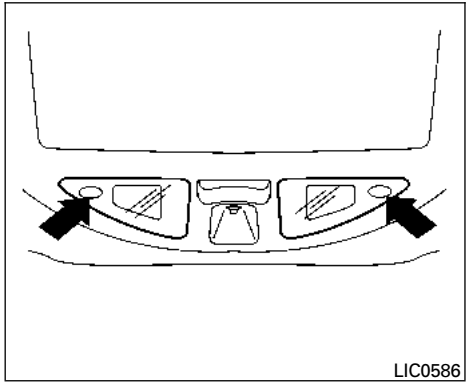


To turn the map lights on, press the switches. To turn them off, press the switches again.

**⚠ CAUTION**

**Do not use for extended periods of time with the engine stopped. This could result in a discharged battery.**

## HOMELINK® UNIVERSAL TRANSCEIVER (if so equipped)

The HomeLink® Universal Transceiver provides a convenient way to consolidate the functions of up to three individual hand-held transmitters into one built-in device.

HomeLink® Universal Transceiver:

- Will operate most Radio Frequency (RF) devices such as garage doors, gates, home and office lighting, entry door locks and security systems.
- Is powered by your vehicle's battery. No separate batteries are required. If the vehicle's battery is discharged or is disconnected, HomeLink® will retain all programming.

**When the HomeLink® Universal Transceiver is programmed, retain the original transmitter for future programming procedures (Example: new vehicle purchases). Upon sale of the vehicle, the programmed HomeLink® Universal Transceiver buttons should be erased for security purposes. For additional information, refer to "Programming HomeLink®" later in this section.**

**⚠ WARNING**

- **Do not use the HomeLink® Universal Transceiver with any garage door opener that lacks safety stop and reverse features as required by federal safety standards. (These standards became effective for opener models manufactured after April 1, 1982). A garage door opener which cannot detect an object in the path of a closing garage door and then automatically stop and reverse, does not meet current federal safety standards. Using a garage door opener without these features increases the risk of serious injury or death.**
- **During the programming procedure your garage door or security gate will open and close (if the transmitter is within range). Make sure that people or objects are clear of the garage door, gate, etc. that you are programming.**
- **Your vehicle's engine should be turned off while programming the HomeLink® Universal Transceiver. Do not breathe exhaust gases; they contain colorless and odorless carbon monoxide. Carbon monoxide is dangerous. It can cause unconsciousness or death.**

## PROGRAMMING HOMELINK®

If you have any questions or are having difficulty programming your HomeLink® buttons, refer to the HomeLink® web site at: www.homelink.com or call 1-800-355-3515.

**NOTE:**

**It is also recommended that a new battery be placed in the hand-held transmitter of the device being programmed to HomeLink® for quicker programming and accurate transmission of the radio-frequency.**

1. Position the end of your hand-held transmitter 1–3 inches (2–8 cm) away from the HomeLink® surface, keeping the HomeLink® indicator light ① in view.

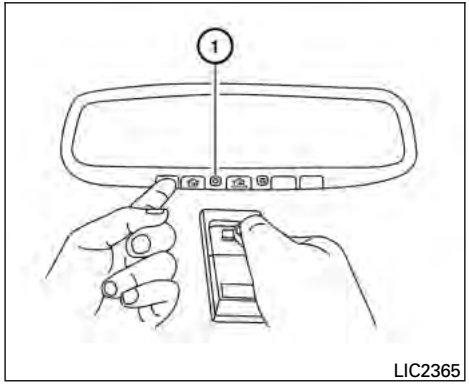

LIC2365

2. Using both hands, simultaneously press and hold the desired HomeLink® button and handheld transmitter button. DO NOT release until the HomeLink® indicator light ① flashes slowly and then rapidly. When the indicator light flashes rapidly, both buttons may be released. (The rapid flashing indicates successful programming.)

**NOTE:**

**Some devices may require you to replace Step 2 with the cycling procedure noted in the "Programing HomeLink® for Canadian customers and gate openers" section.**

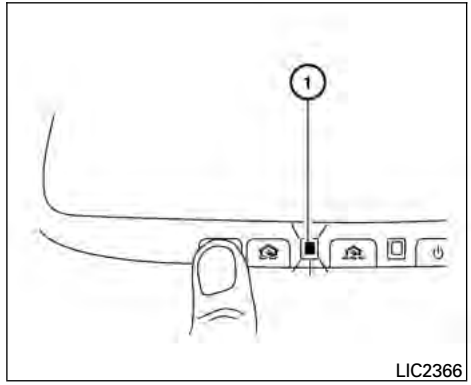

LIC2366

3. Press and hold the programmed HomeLink® button and observe the indicator light.
   - If the indicator light ① **is solid/continuous, programming is complete** and your device should activate when the HomeLink® button is pressed and released.
   - If the indicator light ① blinks **rapidly for two seconds and then turns to a solid/continuous light, continue with Steps 4-6** for a rolling code device. A second person may make the following steps easier. Use a ladder or other device.

Do not stand on your vehicle to perform the next steps.

4. At the receiver located on the garage door opener motor in the garage, locate the "learn" or "smart" button (the name and color of the button may vary by manufacturer but it is usually located near where the hanging antenna wire is attached to the unit). If there is difficulty locating the button, reference the garage door opener's manual.
5. Press and release the "learn" or "smart" button.
6. Return to the vehicle and firmly press and hold the trained HomeLink® button for two seconds and release. Repeat the "press/hold/release" sequence up to 3 times to complete the training process. HomeLink® should now activate your rolling code equipped device.
7. If you have any questions or are having difficulty programming your HomeLink® buttons, refer to the HomeLink® web site at: www.homelink.com or call 1-800-355-3515.

## PROGRAMMING HOMELINK® FOR CANADIAN CUSTOMERS AND GATE OPENERS

Canadian radio-frequency laws require transmitter signals to "time-out" (or quit) after several seconds of transmission – which may not be long enough for HomeLink® to pick up the signal during training. Similar to this Canadian law, some U.S. gate operators are designed to "timeout" in the same manner.

If you live in Canada or you are having difficulties training a gate operator **or** garage door opener by using the "Training" procedures, **replace** "Programming HomeLink®" **Step 2** with the following:

**NOTE:**

**When programming a garage door opener, etc., unplug the device during the "cycling" process to prevent possible damage to the garage door opener components.**

1. See "Programing HomeLink®" step 1 earlier in this section.
2. Using both hands, simultaneously press and hold the desired HomeLink® button and the hand-held transmitter button. During training, your hand-held transmitter may automatically stop transmitting. Continue to press and hold the desired HomeLink® button while you press and re-press ("cycle") your hand-held transmitter every two seconds until the frequency signal has been learned. The HomeLink® indicator light will flash slowly and then rapidly after several seconds upon successful training. DO NOT release until the HomeLink® indicator light flashes slowly and then rapidly. When the indicator light flashes rapidly, both buttons may be released. The rapid flashing indicates successful training.
   Proceed with "Programming HomeLink®" step 3 to complete.
   If the device was unplugged during the programming procedure, remember to plug it back in when programming is completed.

## OPERATING THE HOMELINK® UNIVERSAL TRANSCEIVER

The HomeLink® Universal Transceiver, after it is programmed, can be used to activate the programmed device. To operate, simply press and release the appropriate programmed HomeLink® Universal Transceiver button. The amber indicator light will illuminate while the signal is being transmitted.

For convenience, the hand-held transmitter of the device may also be used at any time.

## PROGRAMMING TROUBLE-DIAGNOSIS

If the HomeLink® does not quickly learn the hand-held transmitter information:

- replace the hand-held transmitter batteries with new batteries.
- position the hand-held transmitter with its battery area facing away from the HomeLink® surface.
- press and hold both the HomeLink® and hand-held transmitter buttons without interruption.
- position the hand-held transmitter 1 - 3 inches (26 - 76 mm) away from the HomeLink® surface. Hold the transmitter in that position for up to 15 seconds. If HomeLink® is not programmed within that time, try holding the transmitter in another position – keeping the indicator light in view at all times.

If you have any questions or are having difficulty programming your HomeLink® buttons, refer to the HomeLink® web site at: www.homelink.com or call 1-800-355-3515.

## CLEARING THE PROGRAMMED INFORMATION

The following procedure clears the programmed information from both buttons. Individual buttons cannot be cleared. However, individual buttons can be reprogrammed, see “Reprogramming a single HomeLink® button” in this section.

To clear all programming:

1. Press and hold the two outer HomeLink® buttons until the indicator light begins to flash in approximately 10 seconds. Do not hold for longer than 20 seconds.
2. Release both buttons.

HomeLink® is now in the programming mode and can be programmed at any time beginning with “Programming HomeLink®” - Step 1.

## REPROGRAMMING A SINGLE HOMELINK® BUTTON

To reprogram a HomeLink® Universal Transceiver button, complete the following:

1. Press and hold the desired HomeLink® button. **DO NOT** release the button.
2. The indicator light will begin to flash after 20 seconds. Without releasing the HomeLink® button, proceed with “Programming HomeLink®” - Step 1.

For questions or comments, contact HomeLink® at: www.homelink.com or 1–800–355–3515.

The HomeLink® Universal Transceiver button has now been reprogrammed. The new device can be activated by pushing the HomeLink® button that was just programmed. This procedure will not affect any other programmed HomeLink® buttons.

## IF YOUR VEHICLE IS STOLEN

If your vehicle is stolen, you should change the codes of any non-rolling code device that has been programmed into HomeLink®. Consult the Owner’s Manual of each device or call the manufacturer or dealer of those devices for additional information.

**When your vehicle is recovered, you will need to reprogram the HomeLink® Universal Transceiver with your new transmitter information.**

**FCC Notice:**

**For USA:**

**This device complies with Part 15 of the FCC Rules. Operation is subject to the following two conditions: (1) This device may not cause harmful interference, and (2) this device must accept any interference received, including interference that may cause undesired operation. Note: Changes or modifications not expressly approved by the party responsible for compliance could void the user's authority to operate the equipment.**

**For Canada:**

**This device complies with RSS-210 of Industry Canada. Operation is subject to the following two conditions: (1) this device may not cause interference, and (2) this device must accept any interference, including interference that may cause undesired operation of the device.**

# 3 Pre-driving checks and adjustments


Keys . . . . . 3-2
NISSAN vehicle immobilizer system keys (if so equipped) . . . . . 3-2
Doors . . . . . 3-3
Locking with key . . . . . 3-3
Locking with inside lock knob . . . . . 3-4
Locking with power door lock switch (if so equipped) . . . . . 3-4
Wide Open doors (if so equipped) . . . . . 3-5
Automatic door locks (if so equipped) . . . . . 3-6
Child safety rear door lock (Crew Cab models only) . . . . . 3-7
Remote keyless entry system (if so equipped) . . . . . 3-7
How to use remote keyless entry system . . . . . 3-8
Hood . . . . . 3-11
Fuel-filler door . . . . . 3-12
Fuel-filler cap . . . . . 3-12
Steering wheel . . . . . 3-14
Tilt operation . . . . . 3-14
Pedal position adjustment (if so equipped) . . . . . 3-14
Sun visors . . . . . 3-15
Vanity mirrors (if so equipped) . . . . . 3-15
Mirrors . . . . . 3-16
Rearview mirror (if so equipped) . . . . . 3-16
Automatic anti-glare rearview mirror (if so equipped) . . . . . 3-16
Outside mirrors . . . . . 3-18
Truck box . . . . . 3-21
Tailgate . . . . . 3-21
Tie down hooks . . . . . 3-25
Automatic drive positioner (if so equipped) . . . . . 3-25
Memory storage function . . . . . 3-26
Entry/exit function . . . . . 3-27
System operation . . . . . 3-28

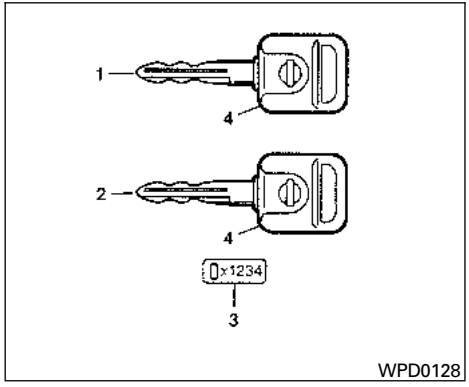


1. Two master keys (black) with transponder chip (if so equipped) and chrome NISSAN brand symbol on one side
2. Valet key (black) with transponder chip (if so equipped)
3. Key number plate
4. Transponder chip (if so equipped)

A key number plate is supplied with your keys. Record the key number and keep it in a safe place (such as your wallet), not in the vehicle. If you lose your keys, see a NISSAN dealer for duplicates by using the key number. NISSAN does not record key numbers so it is very important to keep track of your key number plate.

A key number is only necessary when you have lost all keys and do not have one to duplicate from. If you still have a key, your NISSAN dealer can duplicate it.

## NISSAN VEHICLE IMMOBILIZER SYSTEM KEYS (if so equipped)

You can only drive your vehicle using the master or valet keys which are registered to the NISSAN Vehicle Immobilizer System components in your vehicle. These keys have a transponder chip in the key head.

The master key can be used for all the locks.

The valet key cannot be used for the console box lock, the bedside storage compartment lock, or the glove box lock (if so equipped).

To protect belongings when you leave a key with someone, give them the valet key only.

**Never leave these keys in the vehicle.**

Additional or replacement keys:

If you still have a key, the key number is not necessary when you need extra NISSAN Vehicle Immobilizer System keys. Your dealer can duplicate your existing key. As many as five NISSAN Vehicle Immobilizer System keys can be used with one vehicle. You should bring all NISSAN Vehicle Immobilizer System keys that you have to your NISSAN dealer for registration. This is because the registration process will erase the memory of all key codes previously registered into the NISSAN Vehicle Immobilizer System. After the registration process, these components will only recognize keys coded into the NISSAN Vehicle Immobilizer System during registration. Any key that is not given to your dealer at the time of registration will no longer be able to start your vehicle.

**⚠ CAUTION**

**Do not allow the immobilizer system key, which contains an electrical transponder, to come into contact with water or salt water. This could affect system function.**

When the doors are locked using one of the following methods, the doors can not be opened using the inside or outside door handles. The doors must be unlocked to open the doors.

**⚠WARNING**

- **Always have the doors locked while driving. Along with the use of seat belts, this provides greater safety in the event of an accident by helping to prevent persons from being thrown from the vehicle. This also helps keep children and others from unintentionally opening the doors, and will help keep out intruders.**
- **Before opening any door, always look for and avoid oncoming traffic.**
- **Do not leave children unattended inside the vehicle. They could unknowingly activate switches or controls. Unattended children could become involved in serious accidents.**

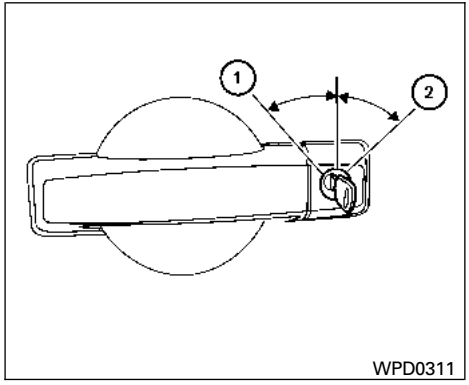


**Driver's side**

## LOCKING WITH KEY

### Manual (if so equipped)

To lock a door, turn the key toward the front of the vehicle ①. To unlock, turn the key toward the rear ②.

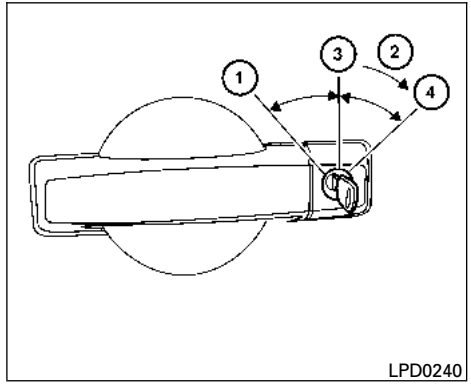


### Power (if so equipped)

The power door lock system allows you to lock or unlock all doors at the same time.

Turning the key toward the front ① of the vehicle locks all doors.

Turning the key one time toward the rear ② of the vehicle unlocks that door. From that position, returning the key to neutral ③ (where the key can only be removed and inserted) and turning it toward the rear again within 5 seconds unlocks all doors ④.

## Opening and closing windows

The driver's door key operation allows you to open and close windows equipped with automatic operation at the same time.

- To open the windows, turn the driver's door key toward the rear of the vehicle for **longer than 1 second** after the door is unlocked.
- To close the windows, turn the driver's door key toward the front of the vehicle for **longer than 1 second** after the door is locked.

Windows stop when the key cylinder is released.

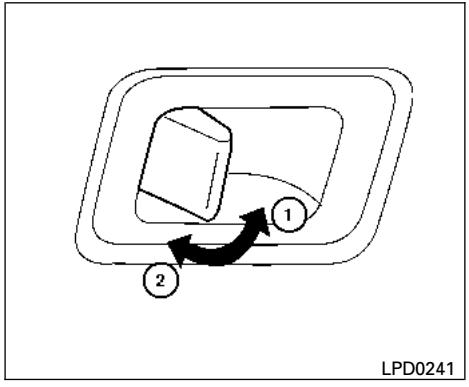


**Inside lock**

## LOCKING WITH INSIDE LOCK KNOB

To lock the door without the key, move the inside lock knob to the lock position ①, then close the door.

To unlock the door without the key, move the inside lock knob to the unlock position ②.

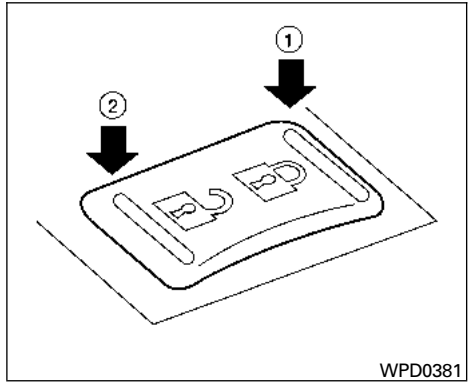


## LOCKING WITH POWER DOOR LOCK SWITCH (if so equipped)

To lock all the doors without a key, push the door lock switch (driver's or front passenger's side) to the lock position ①. When locking the door this way, be certain not to leave the key inside the vehicle.

To unlock all the doors without a key, push the door lock switch (driver's or front passenger's side) to the unlock position ②.

## Lockout protection

When the power door lock switch (driver's or front passenger's side) is moved to the lock position with the key in the ignition switch and any door open, all doors will lock and then unlock automatically. This helps to prevent the keys from being accidently locked inside the vehicle.

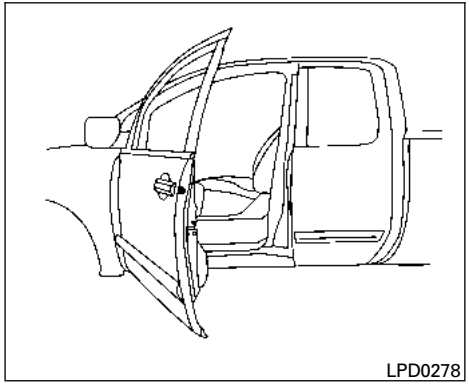


## WIDE OPEN DOORS (if so equipped)

**⚠CAUTION**

**Do not open the Wide Open door to the full open position while the fuel-filler door is open; only open it as far as the first detent. Opening the door to the full open position may damage the fuel-filler door and Wide Open door.**

The Wide Open doors open nearly 180° to allow access to the rear of the cab.

1. Open the driver's or passenger's door.

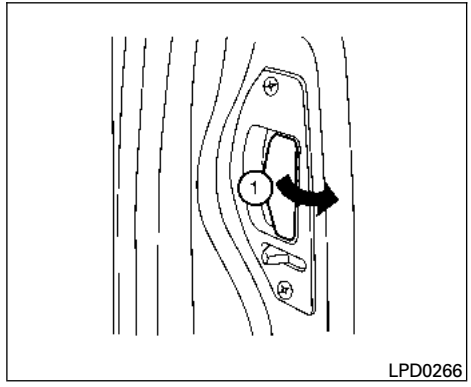


2. From the outside, pull the door handle ① toward you.

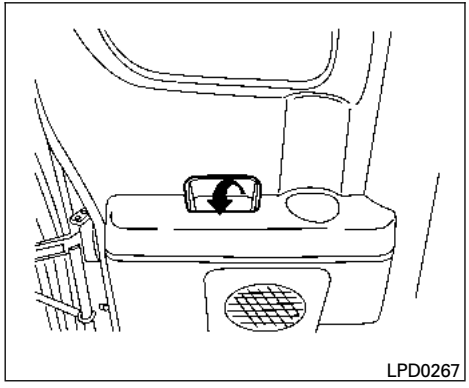


From the inside, pull the inside door handle toward you. The door will unlock automatically.

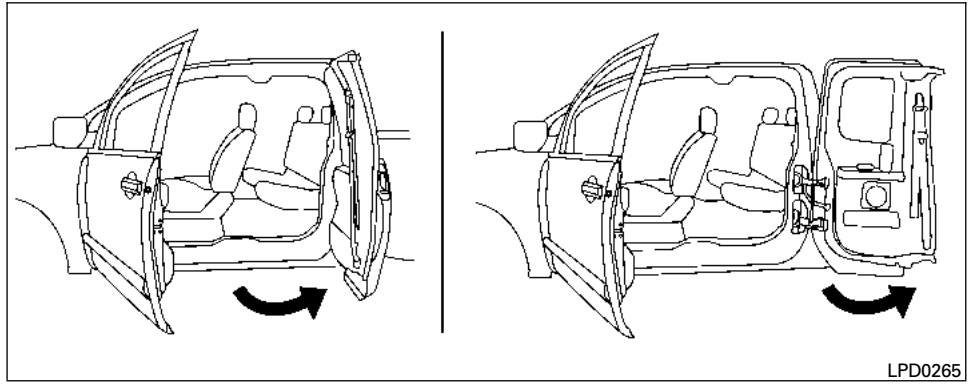


3. Open the door to the desired position.

## AUTOMATIC DOOR LOCKS (if so equipped)

- All doors lock automatically when the vehicle speed reaches 15 MPH (24 km/h).
- All doors unlock automatically when the transmission is placed in the P (Park) position.

**The automatic unlock function can be deactivated or activated.** To deactivate or activate the automatic door unlock system, perform the following procedure:

1. Close all doors.
2. Place the ignition switch in the ON position.
3. Within 20 seconds of performing Step 2, push and hold the power door lock switch to the 🔓 position (UNLOCK) for more than 5 seconds.
4. When activated, the hazard indicator will flash twice. When deactivated, the hazard indicator will flash once.

5. The ignition switch must be placed in the OFF and ON position again between each setting change.

When the automatic door unlock system is deactivated, the doors do not unlock when the transmission is placed in the P (Park) position. To unlock the door manually, use the inside lock knob or the power door lock switch (driver's or front passenger's side).

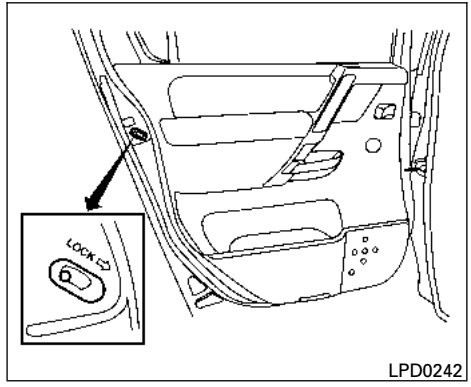


## CHILD SAFETY REAR DOOR LOCK (Crew Cab models only)

Child safety locks help prevent the rear doors from being opened accidentally, especially when small children are in the vehicle.

The child safety lock levers are located on the edge of the rear doors.

**When the lever is in the LOCK position, the door can be opened only from the outside.**

**⚠ WARNING**

- **Radio waves could adversely affect electric medical equipment. Those who use a pacemaker should contact the electric medical equipment manufacturer for the possible influences before use.**
- **The remote keyless entry keyfob transmits radio waves when the buttons are pushed. The FAA advises radio waves may affect aircraft navigation and communication systems. Do not operate the remote keyless entry keyfob while on an airplane. Make sure the buttons are not operated unintentionally when the unit is stored for a flight.**

It is possible to lock/unlock all doors, turn on the interior lights and puddle lights (if so equipped), and activate the panic alarm by using the keyfob from outside the vehicle.

Some settings for the keyfob, such as horn beep, can be adjusted. For vehicles without navigation system, refer to "Silencing the horn beep feature" in this section. For vehicles with navigation system, refer to "Vehicle electronic systems" in the "Display screen, heater, air conditioner, audio and phone systems" section in this manual.

**Be sure to remove the key from the vehicle before locking the doors.**

The keyfob can operate at a maximum distance of approximately 33 ft (10 m) from the vehicle. The effective distance depends upon the conditions around the vehicle.

As many as 5 keyfobs can be used with one vehicle. For information concerning the purchase and use of additional keyfobs, contact a NISSAN dealer.

The keyfob will not function when:

- the battery is discharged.
- the distance between the vehicle and the keyfob is over 33 ft (10 m).

**The panic alarm will not activate when the key is in the ignition switch.**

**⚠ CAUTION**

**Listed below are conditions or occurrences which will damage the keyfob:**

- **Do not allow the keyfob, which contains electrical components, to come into contact with water or salt water. This could affect the system function.**
- **Do not drop the keyfob.**
- **Do not strike the keyfob sharply against another object.**
- **Do not change or modify the keyfob.**
- **Wetting may damage the keyfob. If the keyfob gets wet, immediately wipe until it is completely dry.**
- **Do not place the keyfob for an extended period in an area where temperatures exceed 140°F (60°C).**
- **Do not attach the keyfob with a key holder that contains a magnet.**
- **Do not place the keyfob near equipment that produces a magnetic field, such as a TV, audio equipment and personal computers.**

**If a keyfob is lost or stolen, NISSAN recommends erasing the ID code of that keyfob. This will prevent the keyfob from unauthorized use to unlock the vehicle. For information regarding the erasing procedure, please contact a NISSAN dealer.**

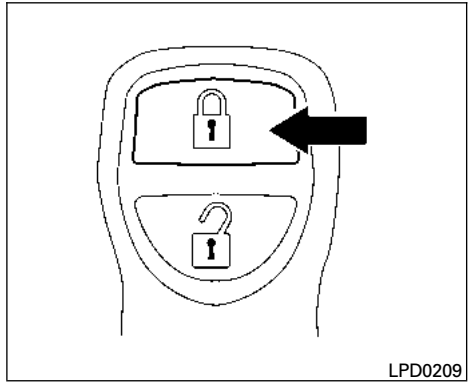


## HOW TO USE REMOTE KEYLESS ENTRY SYSTEM

### Locking doors

1. Close all windows.
2. Remove the key from the ignition switch.
3. Close the hood and all doors.
4. Press the button on the keyfob. All the doors lock. The hazard warning lights flash twice and the horn beeps once to indicate all doors are locked.

- When the button is pressed with all doors locked, the hazard warning lights flash twice and the horn beeps once as a reminder that the doors are already locked.
- If a door is open and you press the button, the doors will lock but the horn will not beep and the hazard warning lights will not flash.

The horn may or may not beep. For vehicles without navigation system, refer to “Silencing the horn beep feature” later in this section. For vehicles with navigation system, refer to “How to use the setting button” in the “Display screen, heater, air conditioner, audio and phone systems” section later in this manual.

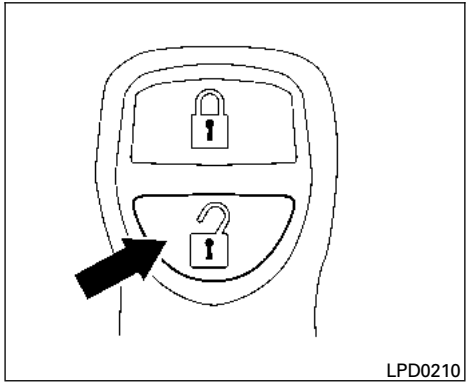


## Unlocking doors

Press the button on the keyfob once.

- Only the driver’s door unlocks.
- The hazard warning lights flash once if all doors are completely closed with the ignition switch in any position except the ON position.
- The interior lights and puddle lights (if so equipped) turn on and the light timer activates for a period of time when the interior light switch is in the DOOR position with the ignition switch in any position except the ON position.

Press the button on the keyfob again within 5 seconds.

- All doors unlock.
- The hazard warning lights flash once if all doors are completely closed.

The interior lights can be turned off without waiting by inserting the key into the ignition switch and placing it in the ON or START position, locking the doors with the keyfob or pushing the interior light switch to the OFF position.

## Auto relock

When the button on the keyfob is pressed, all doors will lock automatically within 1 minute unless one of the following operations is performed:

- Any door is opened.
- A key is inserted into the ignition switch and the switch is cycled from OFF to ON.

## Linking the keyfob to automatic drive positioner memory

If the vehicle is equipped with automatic drive positioner, the keyfob can be linked to a memory setting.

See “Automatic drive positioner” in this section.

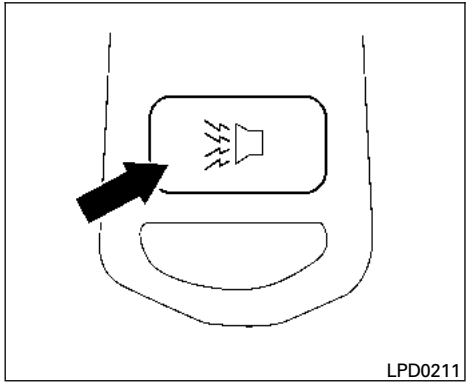


## Using the panic alarm

If you are near your vehicle and feel threatened, you may activate the panic alarm to call attention by pressing and holding the button on the keyfob for **longer than 0.5 seconds.**

The panic alarm and headlights will stay on for a period of time.

The panic alarm stops when:

- it has run for a period of time, or
- any button is pressed on the keyfob.

## Using the interior lights

Press the button on the keyfob once to turn on the interior lights and puddle lights (if so equipped).

For additional information, refer to “Interior light” in the “Instruments and controls” section in this manual.

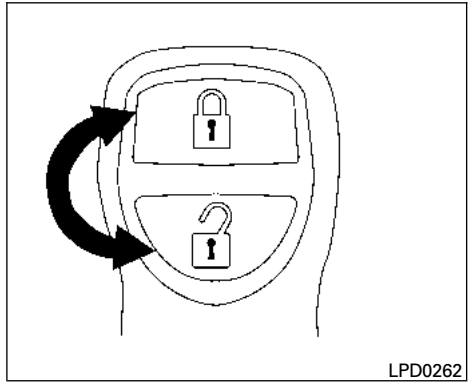


## Silencing the horn beep feature

If desired, the horn beep feature can be deactivated using the keyfob.

**NOTE:**

**If you change the horn beep and light flash feature with the keyfob, the display screen (if so equipped) will not show the current mode and cannot be used to change the mode. Use the keyfob to return to the previous mode and re-enable the display screen control.**

**To deactivate:** Press and hold the and buttons **for at least 2 seconds.**

The hazard warning lights will flash 3 times to confirm that the horn beep feature has been deactivated.

**To activate:** Press and hold the and buttons **for at least 2 seconds once more.**

The hazard warning lights will flash once and the horn will sound once to confirm that the horn beep feature has been reactivated.

Deactivating the horn beep feature does not silence the horn if the alarm is triggered.

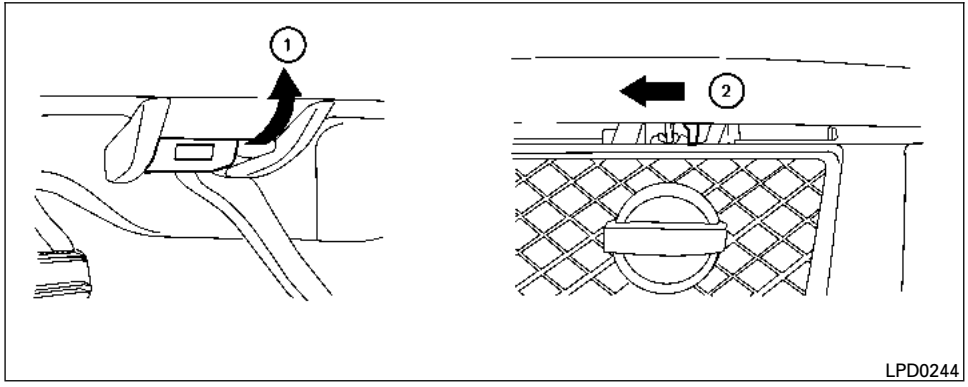


① Pull the hood lock release handle located below the driver side instrument panel. The hood will spring up slightly.

② Push the lever at the front of the hood to the side as illustrated with your fingertips and raise the hood.

When closing the hood, lower it slowly and make sure it locks into place.

**⚠WARNING**

- **Make sure the hood is completely closed and latched before driving. Failure to do so could cause the hood to fly open and result in an accident.**
- **If you see steam or smoke coming from the engine compartment, to avoid injury do not open the hood.**

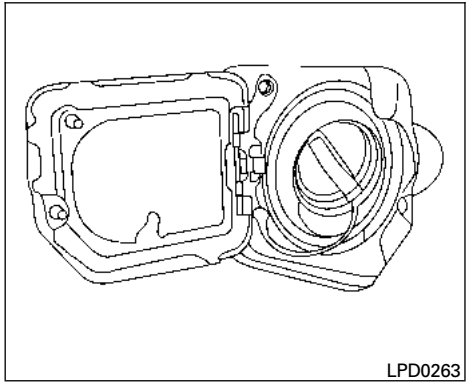


## FUEL-FILLER CAP

**⚠WARNING**

- **Gasoline is extremely flammable and highly explosive under certain conditions. You could be burned or seriously injured if it is misused or mishandled. Always stop the engine and do not smoke or allow open flames or sparks near the vehicle when refueling.**
- **Do not attempt to top off the fuel tank after the fuel pump nozzle shuts off automatically. Continued refueling may cause fuel overflow, resulting in fuel spray and possibly a fire.**
- **Use only an original equipment type fuel-filler cap as a replacement. It has a built-in safety valve needed for proper operation of the fuel system and emission control system. An incorrect cap can result in a serious malfunction and possible injury. It could also cause the Malfunction Indicator Light (MIL) to come on.**
- **Never pour fuel into the throttle body to attempt to start your vehicle.**
- **Do not fill a portable fuel container on a truck bed liner, rubber truck bed mat, or other insulating material. Static electricity can cause an explosion of flammable liquid, vapor or gas in any vehicle or trailer. To reduce the risk of serious injury or death when filling portable fuel containers:**
  - **Always place the container on the ground when filling.**
  - **Do not use electronic devices when filling.**
  - **Keep the pump nozzle in contact with the container while you are filling it.**
  - **Use only approved portable fuel containers for flammable liquid.**

**⚠CAUTION**

- **Only vehicles with the E-85 filler door label can operate on up to E-85 fuel. Fuel system or other damage can occur if up to E-85 fuel is used in vehicles that are not designed to run on E-85 fuel. For further information see the "Fuel Recommendation" in the "Technical and consumer information" section of this manual.**
- **The LOOSE FUEL CAP warning will appear if the fuel-filler cap is not properly tightened. It may take a few driving trips for the message to be displayed. Failure to tighten the fuel-filler cap properly after the LOOSE FUEL CAP warning appears may cause the Malfunction Indicator Light (MIL) to illuminate.**

- **Failure to tighten the fuel-filler cap properly may cause the Malfunction Indicator Light (MIL) to illuminate. If the light illuminates because the fuel-filler cap is loose or missing, tighten or install the cap and continue to drive the vehicle. The light should turn off after a few driving trips. If the light does not turn off after a few driving trips, have the vehicle inspected by a NISSAN dealer.**
- **For additional information, see the "Malfunction Indicator Light (MIL)" in the "Instruments and Controls" section in this manual.**
- **If fuel is spilled on the vehicle body, flush it away with water to avoid paint damage.**

For additional information, see "Fuel recommendation (without Flexible Fuel Vehicle option)" and "Flexible fuel vehicle (FFV) fuel recommendation" in the "Technical and consumer information" section in this manual.

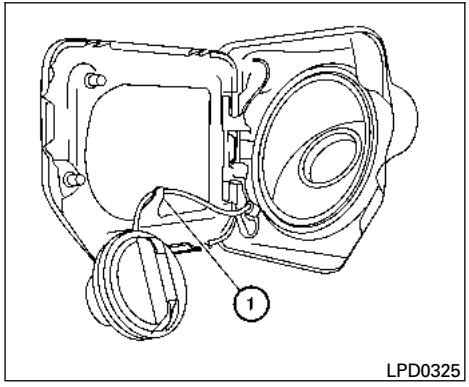

LPD0325

To remove the fuel-filler cap:

1. Turn the fuel-filler cap counterclockwise to remove.
2. Loop the tether strap around the hook ① while refueling.

To install the fuel-filler cap:

1. Insert the fuel-filler cap straight into the fuel-filler tube.
2. Turn the fuel-filler cap clockwise until a single click is heard.

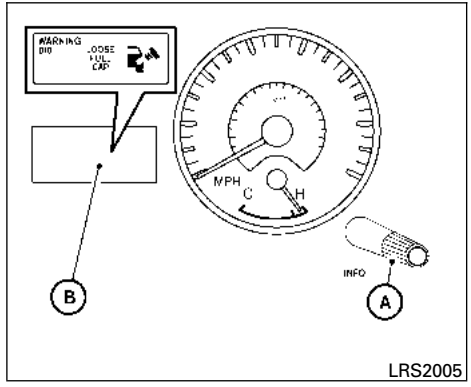

LRS2005

## Loose Fuel Cap warning

The LOOSE FUEL CAP warning appears in the odometer when the fuel-filler cap is not tightened correctly after the vehicle has been refueled. It may take a few driving trips for the message to be displayed. To turn off the warning, perform the following:

1. Remove and install the fuel-filler cap as previously described as soon as possible.
2. Tighten the fuel-filler cap until it clicks.
3. Press the loose fuel cap warning reset button Ⓐ on the instrument panel located behind the steering wheel for about 1 second to turn off the LOOSE FUEL CAP warning Ⓑ after tightening the fuel-filler cap.

## STEERING WHEEL

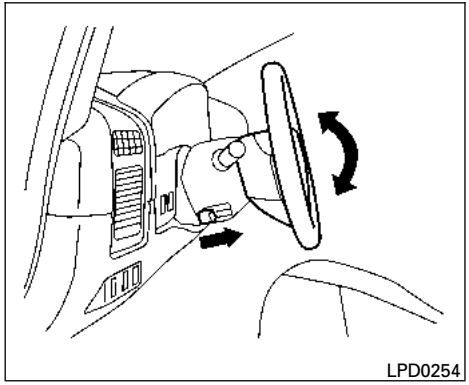


### TILT OPERATION

**⚠WARNING**

**Do not adjust the steering wheel while driving. You could lose control of your vehicle and cause an accident.**

Pull the lock lever forward and hold it to adjust the steering wheel up or down to the desired position.

Release the lock lever to lock the steering wheel in place.

## PEDAL POSITION ADJUSTMENT (if so equipped)

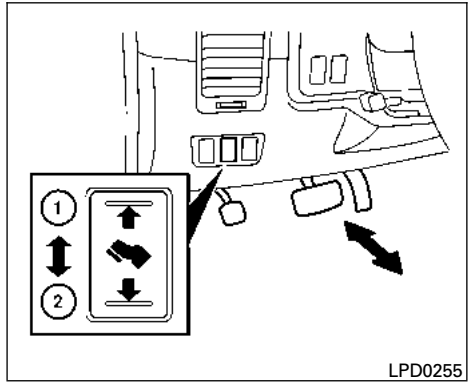


The accelerator and brake pedals can be adjusted for driving comfort.

Use the pedal adjusting switch to adjust the brake and accelerator pedal position away from the driver ① or toward the driver ②.

The brake and accelerator pedals cannot be adjusted separately.

**⚠WARNING**

**Do not adjust the pedal position while driving. You can lose control of your vehicle and cause an accident.**

**⚠CAUTION**

**Do not adjust the pedal position with your foot on the pedal.**

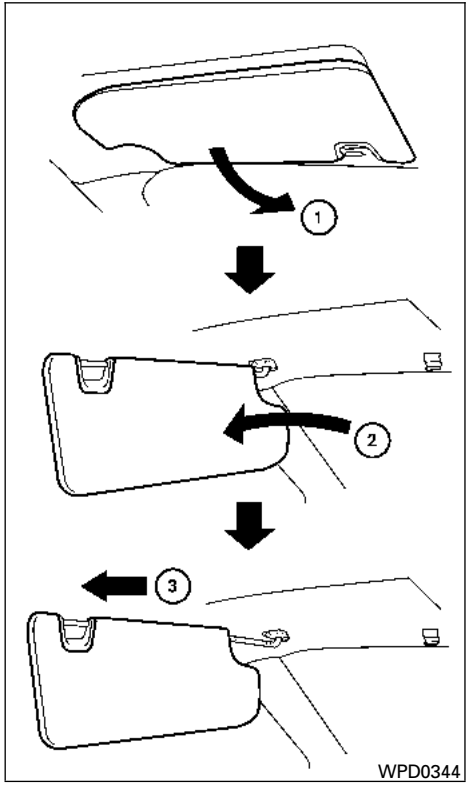


① To block glare from the front, swing down the main sun visor.

② To block glare from the side, remove the main sun visor from the center mount and swing the visor to the side.

③ To extend the sun visor, slide in or out as needed.

**⚠CAUTION**

- **Do not store the sun visor before returning the extension to its original position.**
- **Do not pull the extension sun visor forcedly downward.**

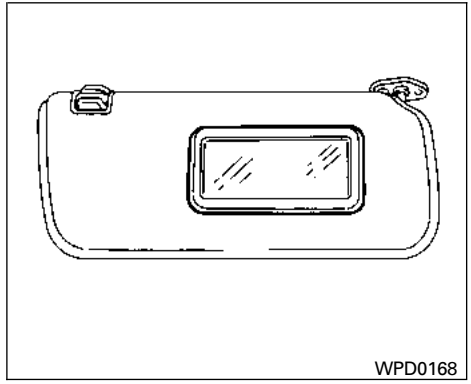


**Type A**

## VANITY MIRRORS (if so equipped)

To access the vanity mirror, pull the sun visor down and flip open the mirror cover (if so equipped). Some vanity mirrors are illuminated and turn on when the mirror cover is open.

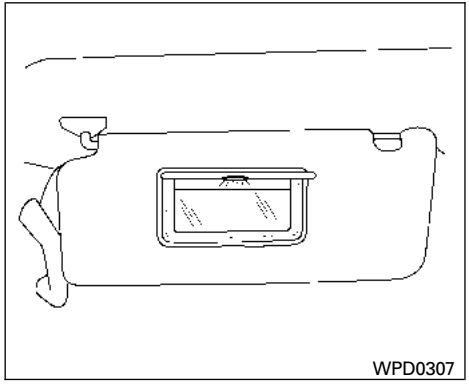


**Type B**

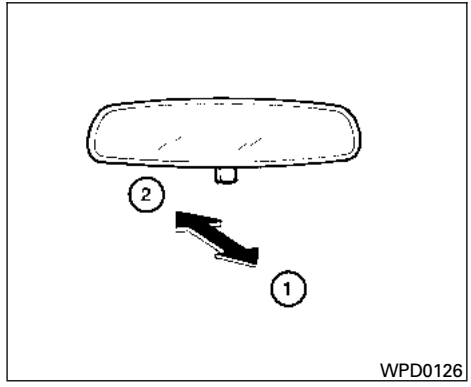


## REARVIEW MIRROR (if so equipped)

The night position ① reduces glare from the headlights of vehicles behind you at night.

Use the day position ② when driving in daylight hours.

**⚠WARNING**

**Use the night position only when necessary, because it reduces rear view clarity.**

## AUTOMATIC ANTI-GLARE REARVIEW MIRROR (if so equipped)

The inside mirror is designed so that it automatically dims during night time conditions and according to the intensity of the headlights of the vehicle following you. The automatic anti-glare feature is activated when the ignition switch is in the ON position.

The indicator light will illuminate when the automatic anti-glare feature is operating.

**NOTE:**

**Do not hang any objects over the sensors ① or apply glass cleaner to the sensors. Doing so will reduce the sensitivity of the sensors, resulting in improper operation.**

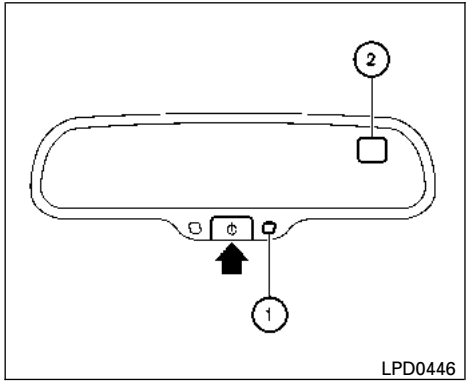


**Type A**

## Type A

With the ignition switch placed in the ON position, press the ⏻ button as described:

- To turn off the anti-glare feature, press the ⏻ button. The indicator light will turn off.
- To turn on the anti-glare feature, press the ⏻ button again. The indicator light will turn on.

The indicator light will illuminate when the automatic anti-glare feature is operating.

For more information about the compass and compass features ② (if so equipped), see “Compass display” in the “Instruments and controls” section of this manual.

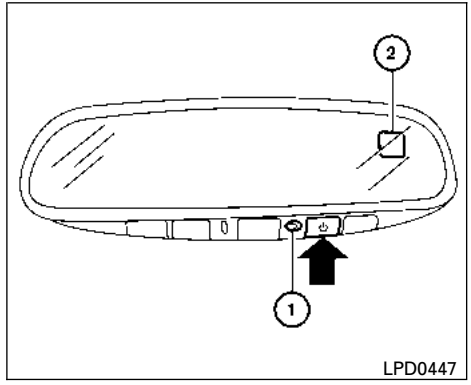


**Type B**

## Type B

With the ignition switch in the ON position, press the ⏻ button as described:

- To turn off the automatic anti-glare feature, press the ⏻ button. The indicator light will turn off.
- To turn on the automatic anti-glare feature, press the ⏻ button again. The indicator light will turn on.

The indicator light will illuminate when the automatic anti-glare feature is operating.

For information on HomeLink® Universal Transceiver operation, see “HomeLink® Universal Transceiver” in the “Instruments and controls” section of this manual.

For information on the compass and compass features ②, see “Compass display” in the “Instruments and controls” section of this manual.

## OUTSIDE MIRRORS

**⚠WARNING**

- **Objects viewed in the outside mirror on the passenger side are closer than they appear. Be careful when moving to the right. Using only this mirror could cause an accident. Use the inside mirror or glance over your shoulder to properly judge distances to other objects.**

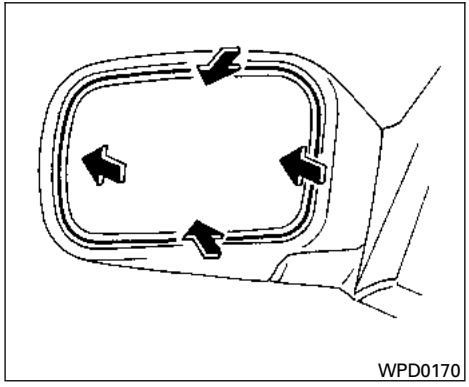


### Manual control type (if so equipped)

The outside mirror can be moved in any direction for a better rear view.

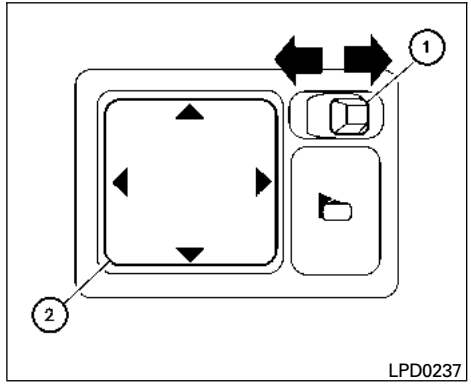


### Electric control type (if so equipped)

The outside mirror remote control will operate only when the ignition switch is placed in the ACC or ON position.

Move the small switch ① to select the right or left mirror. Adjust each mirror to the desired position using the large switch ②.

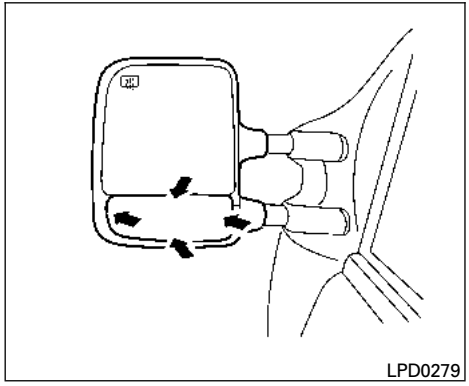


Trailer tow mirrors (if so equipped)

**⚠WARNING**

**Objects viewed in the convex portion of the trailer tow mirror are closer than they appear. Be careful when changing lanes or turning. Using only the convex mirror could cause an accident. Use the other mirrors or glance over your shoulder to properly judge distances to other objects.**

Use the outside mirror remote control to adjust the top portion of the trailer tow mirror.

The lower portion of the trailer tow mirror can be moved manually in any direction for a better rear view.

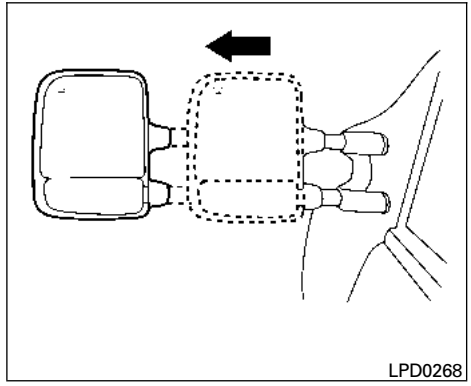


Pull the trailer tow mirror outward to extend it to the desired position for better visibility while towing a trailer.

**⚠WARNING**

**Do not extend or retract mirrors while driving. You may lose control of your vehicle and cause an accident.**

**⚠CAUTION**

**Driving in tight spaces with mirrors extended may cause damage to the vehicle.**

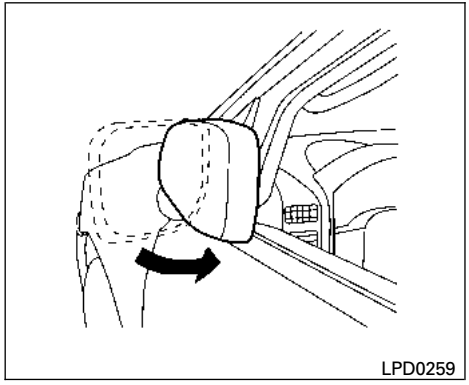


**Type A**

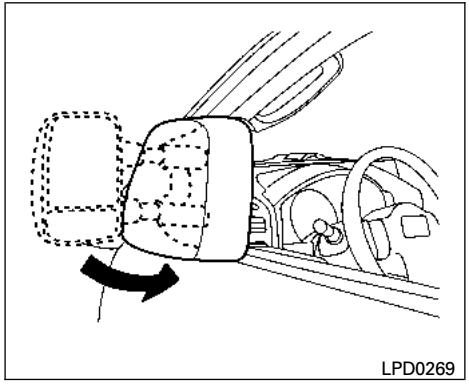


**Type B**

## Manual folding outside mirrors (if so equipped)

Pull the outside mirror toward the door to fold it.

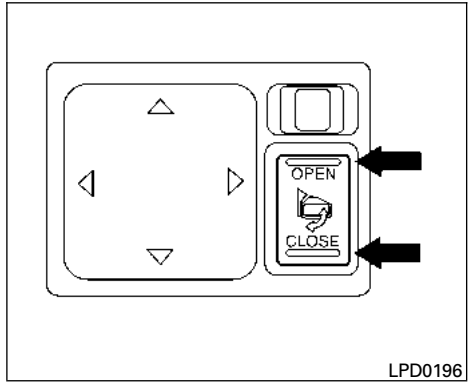


## Power folding outside mirrors (if so equipped)

**⚠ CAUTION**

**Do not manually fold the power folding mirrors. Manually folding the mirrors can damage the mirrors.**

Push the switch to open or close the mirrors.

If one of the mirrors are manually operated or bumped, the mirror body can become loose at the pivot point. To correct electronic mirror operation, cycle the mirrors by pushing the “CLOSE” switch until completely closed, then push the “OPEN” switch until the mirrors are in the open position.

## Automatic anti-glare outside mirror (Driver's side only) (if so equipped)

The outside mirror will automatically dim during nighttime conditions to reduce the glare from the headlights of trailing vehicles. The automatic anti-glare feature operates only when the ignition switch is placed in the ON position.

The automatic anti-glare feature will be on when starting the vehicle. The indicator light on the automatic anti-glare rearview mirror will illuminate when the automatic anti-glare feature is operating.

To turn off the anti-glare feature, press the ⏻ button on the rearview mirror. The indicator light will turn off.

To turn on the anti-glare feature again, press the ⏻ button on the rearview mirror. The indicator light will turn on.

For information on the automatic anti-glare rearview mirror, see "Automatic anti-glare rearview mirror" in this section.

## Heated mirrors (if so equipped)

Some outside mirrors can be heated to defrost, defog, or de-ice for improved visibility. For additional information, see "Rear window and outside mirror defroster switch" in the "Instruments and controls" section of this manual.

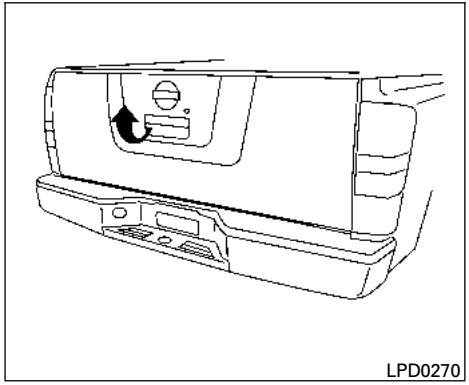


# TAILGATE

## Opening the tailgate

Pull the tailgate handle upward and lower the tailgate. The support cables hold the tailgate open.

When closing the tailgate, make sure the latches are securely locked.

**Do not drive the vehicle with the tailgate down, unless equipped with NISSAN's Bed Extender (accessory) or equivalent in the extended position.**

For proper truck box loading see "Vehicle loading information" in the "Technical and consumer information" section of this manual.

**⚠ WARNING**

- **It is extremely dangerous to ride in a cargo area inside a vehicle. In a collision, people riding in these areas are more likely to be seriously injured or killed.**
- **Do not allow people to ride in any area of your vehicle that is not equipped with seats and seat belts.**
- **Be sure everyone in your vehicle is in a seat and using a seat belt properly.**

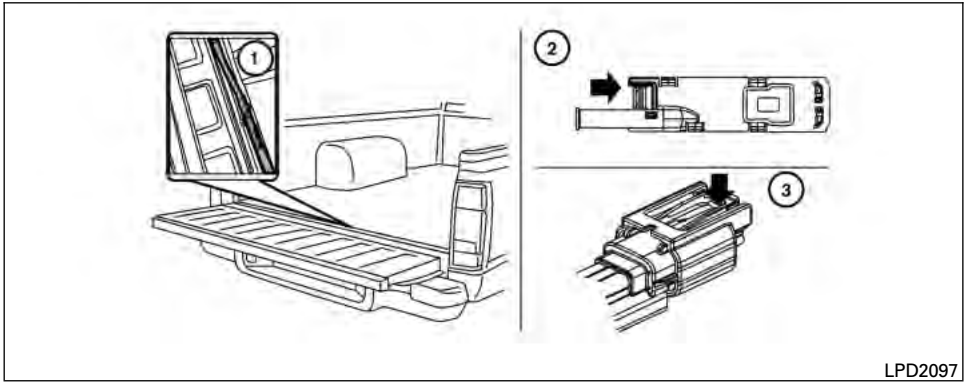


## Disconnecting the rear camera (if so equipped)

Before removing the tailgate disconnect the rear camera by performing the following:

1. Open the tailgate to access the rear camera connector bracket ① located on the rear sill.
2. Remove the connector bracket ② from the sill by pressing the locking tab inward, in the direction shown, while pulling the bracket apart.
3. Disconnect the chassis wiring harness ③ by pressing inward on the locking tab, in the direction shown, while pulling the connectors apart. Hold the connector firmly to prevent the connector in the chassis harness from falling into the sill.
4. Take the chassis plug and bracket from the glove box and connect them to the chassis wiring harness to avoid contamination to the terminals which will lead to malfunction of the rear camera.
5. Insert the bracket back into the sill.
6. Take the tailgate plug from the glove box and connect it to the tailgate wiring harness to avoid contamination which will lead to malfunction of the rear camera.
7. Remove the tailgate. See “Removing the tailgate” in this section.

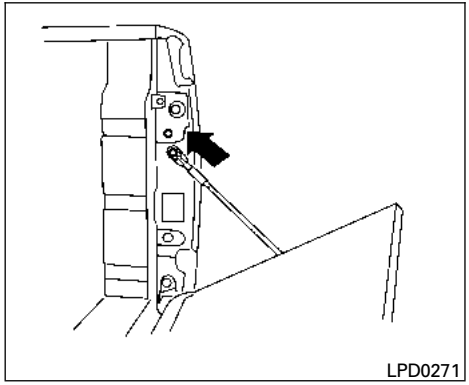


## Removing the tailgate

1. Disconnect the wiring harness for the rear camera (if so equipped). See “Disconnecting the rear camera” in this section.
2. Release the tailgate support cables.

**⚠ CAUTION**

- **The tailgate is heavy. Two people should remove or install it. Be careful not to drop it during removal.**
- **After releasing the support cables, do not let the tailgate rest on the bumper.**

3. Hold the tailgate at a 45 degree angle.
4. Pull the tailgate out from the left side hinge.
5. Slide the tailgate out of the right side hinge.

## Installing the tailgate

1. Insert the tailgate into the right side hinge.
2. Hold the tailgate at a 45 degree angle and insert into the left side hinge.
3. Continue to hold the tailgate at a 45 degree angle and attach the tailgate support cables.
4. For vehicles with rear camera: Be sure the tailgate harness is not hanging below the tailgate and keep the tailgate open . See “Connecting the rear camera” in this section before closing the tailgate.
5. For vehicles without rear camera: Close the tailgate securely.

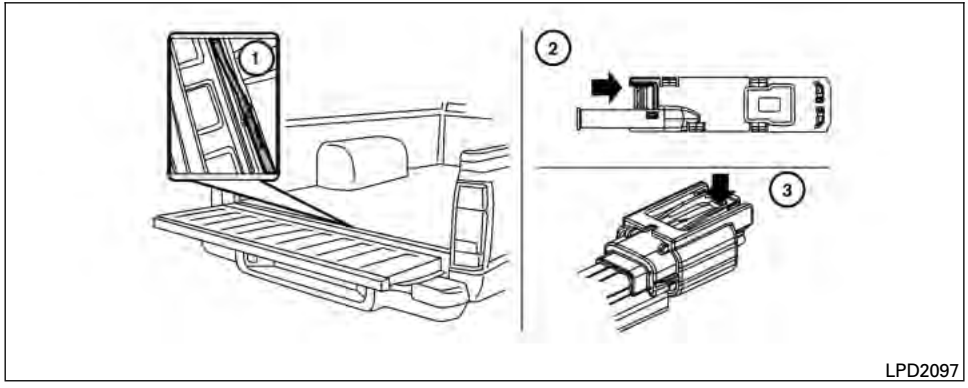

LPD2097

## Connecting the rear camera (if so equipped)

Before closing the tailgate reconnect the rear camera by performing the following: :

1. After attaching the rear tailgate to the truck, keep the tailgate open and check that the tailgate harness is not hanging below the tailgate.
2. Remove the connector bracket ② from the sill by pressing the locking tab inward, in the direction shown, while pulling the bracket apart.
3. Disconnect the chassis plug and bracket from the chassis wiring harness ③. Keep the connector and bracket in a safe place such as the glove box.
4. Disconnect the tailgate plug from the tailgate wiring harness. Keep the tailgate plug in a safe place such as the glove box.
5. Connect the tailgate wiring harness to the chassis wiring harness.
6. Securely fix the rear camera connector bracket ① to the rear sill.
7. Close the tailgate securely.

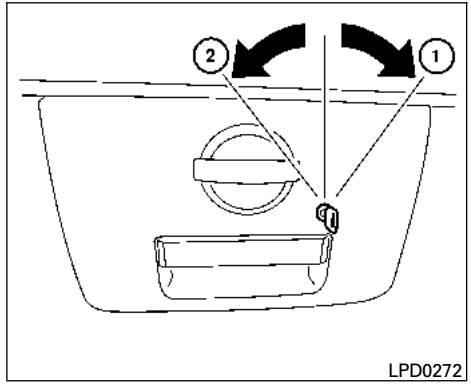

LPD0272

## Locking the tailgate

To unlock the tailgate, turn the key toward the passenger side of the vehicle ①. To lock, turn the key toward the driver side ②.

Both the master key and the valet key can be used to lock and unlock the tailgate.

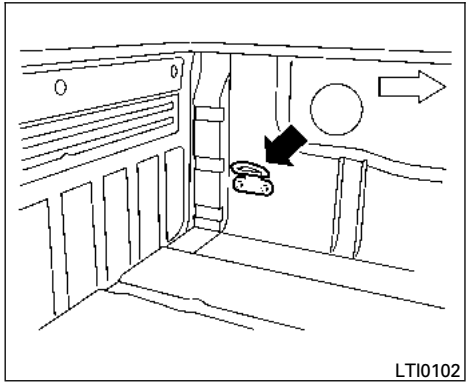


## TIE DOWN HOOKS

For your convenience, tie down hooks are placed at each corner of the truck box. These may be used to help secure cargo loaded into the truck box.

- The weight of the cargo load must be evenly distributed over both the front and the rear axles.
- All cargo should be securely fastened with ropes or straps to prevent it from shifting or sliding within the vehicle.

**⚠WARNING**

- **Properly secure all cargo with ropes or straps to help prevent it from sliding or shifting. In a sudden stop or collision, unsecured cargo could cause personal injury.**

# AUTOMATIC DRIVE POSITIONER (if so equipped)

The automatic drive positioner system has two features:

- Memory storage function
- Entry/exit function

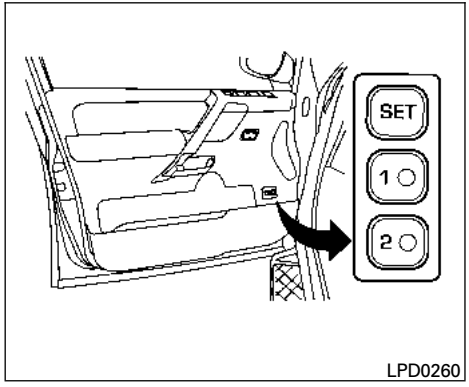


## MEMORY STORAGE FUNCTION

Two positions for the driver's seat, accelerator and brake pedals, and outside mirrors can be stored in the automatic drive positioner memory. Follow these procedures to use the memory system.

1. Place the shift selector in the P (Park) position.
2. Place the ignition switch in the ON position.
3. Adjust the driver's seat, accelerator and brake pedals, and outside mirrors to the desired positions by manually operating each adjusting switch. For additional information, see "Seats" in the "Safety—Seats, seat belts and supplemental restraint system" section of this manual and "Pedal position adjustment" and "Outside mirrors" earlier in this section.

   During this step, do not place the ignition switch in any position other than ON.
4. Push the SET switch and, within 5 seconds, push the memory switch (1 or 2).

   The indicator light for the pushed memory switch will come on and stay on for approximately 5 seconds after pushing the switch. After the indicator light goes off, the selected positions are stored in the selected memory (1 or 2).

If a new memory is stored in the same memory switch, the previous memory will be deleted.

### Linking a keyfob to a stored memory position

Each keyfob can be linked to a stored memory position (memory switch 1 or 2) with the following procedure.

1. Follow the steps for storing a memory position.
2. While the indicator light for the memory switch being set is illuminated for 5 seconds, press the button on the keyfob. The indicator light will blink. After the indicator light goes off, the keyfob is linked to that memory setting.

With the key removed from the ignition switch, press the button on the keyfob. The driver's seat, accelerator and brake pedals, and outside mirrors will move to the memorized position.

**NOTE:**

**If a new memory position is saved to the memory switch, the keyfob automatically re-links.**

### Confirming memory storage

- Place the ignition switch in the ON position and push the SET switch. If the main memory has not been stored, the indicator light will come on for approximately 0.5 seconds. When the memory has stored the position, the indicator light will stay on for approximately 5 seconds.

- If the battery cable is disconnected, or if the fuse opens, the memory storage function will be canceled and must be restarted before a stored memory position can be set again. Drive the vehicle over 25 MPH (40 km/h) to restart the memory storage function. You can also restart the memory storage function using the following procedure.

1. Connect the battery cable or replace the fuse.
2. Open and close the driver's door more than 2 times with the ignition switch in the LOCK position.

   Once the memory storage function has been restarted, you can store a memory position. See "Memory storage function" in this section.

### Selecting the memorized position

Set the shift selector to the P (Park) position, then:

- Within 45 seconds of opening the driver's door, push the memory switch (1 or 2) or
- Place the ignition switch in the ON position and push the memory switch (1 or 2).

The driver's seat, accelerator and brake pedals, and outside mirrors will move to the memorized position with the indicator light blinking, and then the light will stay on for approximately 5 seconds.

## ENTRY/EXIT FUNCTION

This system is designed so that the driver's seat will automatically move when the shift selector is placed in the P (Park) position. This allows the driver to get into and out of the driver's seat more easily.

The driver's seat will slide backward:

- When the key is removed from the ignition switch and the driver's door is opened.
- When the driver's door is opened with the ignition switch placed in the LOCK position.
- When the ignition switch is turned from ACC to LOCK with the driver's door open.

The driver's seat will return to the previous position:

- When the key is inserted into the ignition switch and the driver's door is closed.
- When the driver's door is closed with the ignition switch placed in the LOCK position.
- When the ignition switch is turned from ACC to ON while the shift selector is in the P (Park) position.

The entry/exit function can be adjusted or canceled. For vehicles with a navigation system, see "Vehicle electronic systems" in the "Display screen, heater, air conditioner, audio and phone systems" section of this manual. For vehicles without navigation system, see your NISSAN dealer.

### Restarting the entry/exit function

If the battery cable is disconnected or if the fuse opens, the entry/exit function will be disabled. Drive the vehicle over 25 MPH (40 km/h) to restart the entry/exit function. You can also restart the entry/exit function using the following procedure.

1. Connect the battery cable or replace the fuse.
2. Open and close the driver's door more than 2 times with the ignition switch in the LOCK position.

The entry/exit function should now work properly.

## SYSTEM OPERATION

The automatic drive positioner system will not work or will stop operating under the following conditions:

- When the vehicle speed is above 4 MPH (7 km/h).
- When any of the memory switches are pushed while the automatic drive positioner is operating.
- When the adjusting switch for the driver's seat is turned on while the automatic drive positioner is operating.
- When the seat has already been moved to the memorized position.
- When no seat position is stored in the memory switch.
- When the shift selector is moved from P (Park) to any other position.
- When the driver's door remains open more than 45 seconds and the ignition switch is not in the ON position.

The automatic drive positioner system can be adjusted and canceled. For vehicles with a navigation system, see "Vehicle electronic systems" in the "Display screen, heater, air conditioner, audio and phone systems" section of this manual. For vehicles without navigation system, see your NISSAN dealer.

# 4 Monitor, climate, audio, phone and voice recognition systems


Control panel buttons — color screen with Navigation System (if so equipped) . . . . . 4-4
How to use the touch screen . . . . . 4-5
How to use the BACK button . . . . . 4-7
How to use the MENU button . . . . . 4-7
☼/☽ button . . . . . 4-11
RearView Monitor (if so equipped) . . . . . 4-11
How to read the displayed lines . . . . . 4-12
Difference between predicted and actual distances . . . . . 4-12
Adjusting the screen . . . . . 4-15
Operating tips . . . . . 4-16
Vents . . . . . 4-17
Heater and air conditioner (manual) (Type A) (if so equipped) . . . . . 4-17
Controls . . . . . 4-18
Heater operation . . . . . 4-19
Air conditioner operation . . . . . 4-20
Air flow charts . . . . . 4-21
Heater and air conditioner (manual) (Type B) (if so equipped) . . . . . 4-25
Controls . . . . . 4-25
Heater operation . . . . . 4-26
Air conditioner operation . . . . . 4-28
Air flow charts . . . . . 4-29
Heater and air conditioner (automatic) (if so equipped) . . . . . 4-32
Automatic operation . . . . . 4-32
Manual operation . . . . . 4-33
Operating tips . . . . . 4-33
Servicing air conditioner . . . . . 4-34
Audio system . . . . . 4-34
Radio . . . . . 4-34
FM radio reception . . . . . 4-35
AM radio reception . . . . . 4-35
Satellite radio reception (if so equipped) . . . . . 4-35
Audio operation precautions . . . . . 4-36
FM/AM radio with compact disc (CD) player (if so equipped) . . . . . 4-43
FM/AM/SAT radio with compact disc (CD) player (Type A) (if so equipped) . . . . . 4-48
FM/AM/SAT radio with compact disc (CD) player (Type B) (if so equipped) . . . . . 4-53

USB interface (models without Navigation System) (if so equipped) . . . . . 4-59
USB interface (models with Navigation System) . . . . . 4-60
iPod®* player operation without Navigation System (if so equipped) . . . . . 4-62
iPod®* player operation with Navigation System (if so equipped) . . . . . 4-64
Bluetooth® streaming audio without Navigation System (if so equipped) . . . . . 4-66
Bluetooth® streaming audio with Navigation System (if so equipped) . . . . . 4-68
Pandora® audio (United States only) (if so equipped) . . . . . 4-69
CD care and cleaning . . . . . 4-71
Steering wheel switch for audio control (if so equipped) . . . . . 4-71
Antenna . . . . . 4-72
NISSAN mobile entertainment system (MES) (if so equipped) . . . . . 4-73
Digital video disc (DVD) player controls . . . . . 4-74
Remote control . . . . . 4-75
Flip-down screen . . . . . 4-75
Playing a digital video disc (DVD) . . . . . 4-76
Care and maintenance . . . . . 4-80
How to handle the DVD . . . . . 4-80
Car phone or CB radio . . . . . 4-83
Bluetooth® Hands-Free Phone System without Navigation System (Type A) (if so equipped) . . . . . 4-83
Regulatory Information . . . . . 4-85
Using the system . . . . . 4-85
Control buttons . . . . . 4-88
Getting started . . . . . 4-88
List of voice commands . . . . . 4-90
Voice Adaptation (VA) mode . . . . . 4-94
Manual control . . . . . 4-95
Troubleshooting guide . . . . . 4-97
Bluetooth® Hands-Free Phone System without Navigation System (Type B) (if so equipped) . . . . . 4-98
Regulatory Information . . . . . 4-99
Using the system . . . . . 4-100
Control buttons . . . . . 4-101
Connecting procedure . . . . . 4-101
Voice commands . . . . . 4-102
Making a call . . . . . 4-104
Receiving a call . . . . . 4-104
During a call . . . . . 4-105

Ending a call . . . . . 4-105
Text messaging. . . . . 4-105
Bluetooth® settings . . . . . 4-107
Manual control . . . . . 4-109
Bluetooth® Hands-Free Phone System with Navigation System (if so equipped) . . . . . 4-109
Regulatory Information . . . . . 4-111
Voice commands . . . . . 4-111
Connecting procedure . . . . . 4-112
Vehicle phonebook . . . . . 4-113
Making a call . . . . . 4-114
Receiving a call . . . . . 4-114
During a call . . . . . 4-115
Ending a call . . . . . 4-115
Text messaging. . . . . 4-115
Bluetooth settings . . . . . 4-117
Phone settings . . . . . 4-118
NISSAN Voice Recognition System (if so equipped) . . . . . 4-119
Using the system . . . . . 4-119
System features . . . . . 4-121
Bluetooth® Hands-Free Phone System voice commands. . . . . 4-122
Navigation System voice commands . . . . . 4-122
Audio system voice commands. . . . . 4-123
Information voice commands. . . . . 4-124
Help voice commands . . . . . 4-124
Troubleshooting guide . . . . . 4-125

## CONTROL PANEL BUTTONS — COLOR SCREEN WITH NAVIGATION SYSTEM (if so equipped)

**⚠WARNING**

- **Positioning of the heating or air conditioning controls and display controls should not be done while driving in order that full attention may be given to the driving operation.**
- **Do not disassemble or modify this system. If you do, it may result in accidents, fire, or electrical shock.**
- **Do not use this system if you notice any abnormality, such as a frozen screen or lack of sound. Continued use of the system may result in accident, fire or electric shock.**
- **In case you notice any foreign object in the system hardware, spill liquid on it, or notice smoke or smell coming from it, stop using the system immediately and contact your nearest NISSAN dealer. Ignoring such conditions may lead to accidents, fire or electrical shock.**

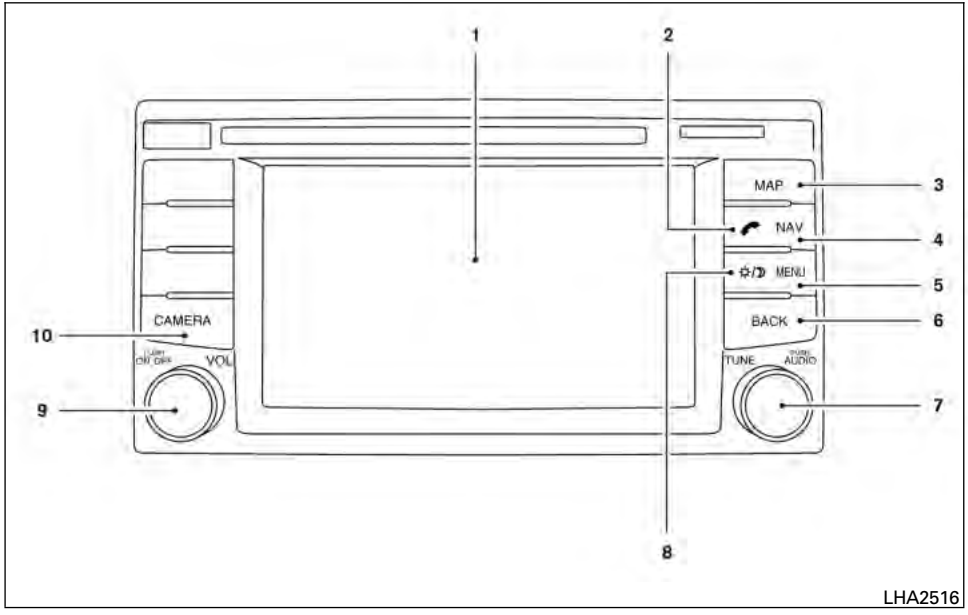


1. Display screen
2. button**
3. MAP button*
4. NAV button*
5. MENU button
6. BACK button
7. TUNE knob / AUDIO button
8. (brightness control) button

9. Power button/VOL (volume) control knob
10. CAMERA button

* For information regarding the Navigation system control buttons, refer to the separate Navigation System Owner's Manual.

** For information regarding the Bluetooth® Hands-Free Phone System control button, see "Bluetooth® Hands-Free Phone System" in this section.

When you use this system, make sure the engine is running.

**If you use the system with the engine not running (ignition ON or ACC) for a long time, it will discharge the battery, and the engine will not start.**

Reference symbols:

"Example" — Words marked in quotes refer to a key shown only on the display. These keys can be selected by touching the screen.

## HOW TO USE THE TOUCH SCREEN

**⚠ CAUTION**

- **The glass display screen may break if it is hit with a hard or sharp object. If the glass screen breaks, do not touch it. Doing so could result in an injury.**
- **To clean the display, never use a rough cloth, alcohol, benzine, thinner or any kind of solvent or paper towel with a chemical cleaning agent. They will scratch or deteriorate the panel.**
- **Do not splash any liquid such as water or car fragrance on the display. Contact with liquid will cause the system to malfunction.**

To help ensure safe driving, some functions cannot be operated while driving.

The on-screen functions that are not available while driving will be "grayed out" or muted.

Park the vehicle in a safe location and then operate the navigation system.

**⚠ WARNING**

- **ALWAYS give your full attention to driving.**
- **Avoid using vehicle features that could distract you. If distracted, you could lose control of your vehicle and cause an accident.**

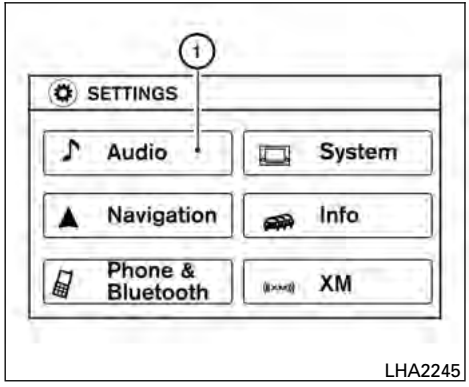

LHA2245

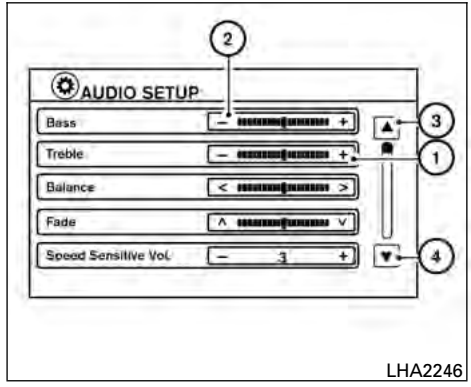

LHA2246

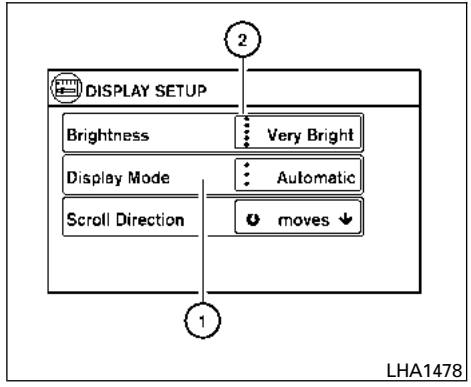

LHA1478

## Touch screen operation

**Selecting the item:**

Touch an item to select. For example, to select the “Audio” key, touch the “Audio” key ① on the screen.

**Adjusting the item:**

For screens where an item can be adjusted incrementally, such as when adjusting the bass and treble for the audio system, touch the “+” key ① or the “−” key ② to adjust the settings of an item.

When there are more items than can be displayed on one screen, touch the up arrow ③ to scroll up the page or touch the down arrow ④ to scroll down the page.

Other items are adjusted by selecting one of a set number of conditions. For example, the Display Mode can be set to “Automatic”, “Day” or “Night”. To adjust this type of item, touch the item ①. The item will cycle through the available settings and the red indicator lights to the left of the setting condition ② will come on or turn off accordingly.

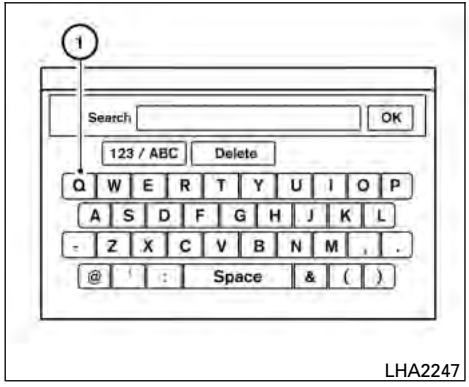

LHA2247

**Inputting characters:**

Touch the letter key ①.

There are some options available when inputting characters.

- **123 / ABC:**
  Changes the available character set to numbers.
- **Space:**
  Inserts a space.
- **Delete:**
  Deletes the last inputted character with one touch. Touch and hold the "Delete" key to delete all of the characters.
- **OK:**
  Completes the character input.

## Touch screen maintenance

If you clean the display screen, use a dry, soft cloth. If additional cleaning is necessary, use a small amount of neutral detergent with a soft cloth. Never spray the screen with water or detergent. Dampen the cloth first and then wipe the screen.

## HOW TO USE THE BACK BUTTON

Press the BACK button to return to the previous screen.

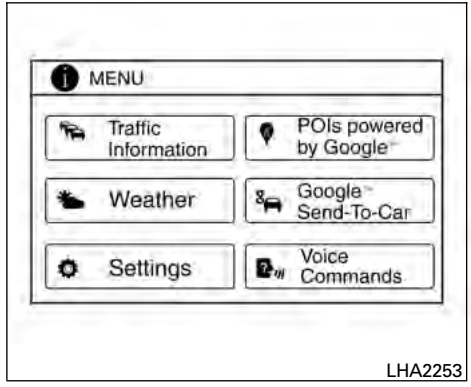

LHA2253

## HOW TO USE THE MENU BUTTON

For more information about the "POIs Powered by Google™", "Google™ Send-To-Car, "Traffic Information" and "Weather" features, see the separate Navigation System Owner's Manual.

For more information about the "Voice Commands" key, see "NISSAN Voice Recognition System" in this section.

To select and/or adjust several functions, features and modes that are available for your vehicle:

1. Press the MENU button.
2. Select the "Settings" key.

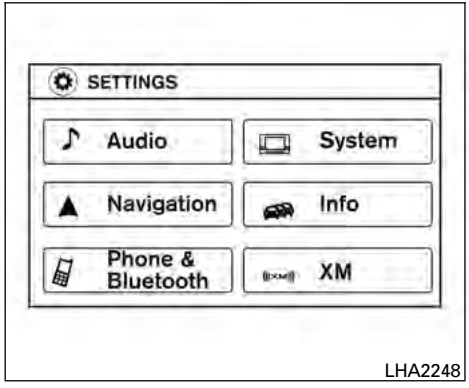

LHA2248

3. Select the desired item.

## Audio

For audio setup, refer to “Audio system” in this section.

## Navigation

Refer to the separate Navigation System Owner’s Manual for information regarding this item.

## Phone & Bluetooth

For information regarding the Bluetooth® Hands-Free Phone System, see “Bluetooth® Hands-Free Phone System” in this section.

For information regarding Bluetooth® audio, see “Bluetooth® streaming audio with Navigation System” in this section.

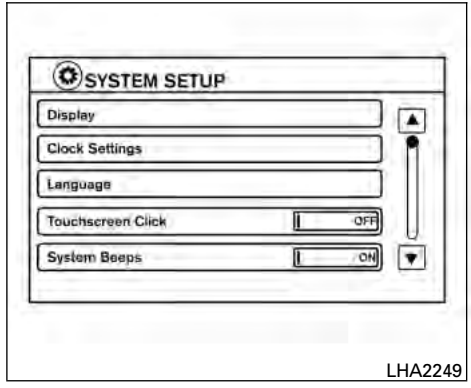

LHA2249

## System

Select the “System” key to select and/or adjust various functions of the system. A screen with additional options will appear.

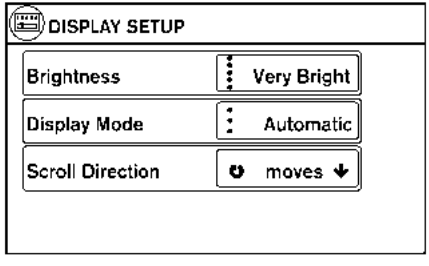

LHA1482

**Display:**

Select the “Display” key to adjust the appearance of the display. The following settings can be adjusted:

**Brightness**
The brightness of the display can be set to Very Bright, Bright, Default, Dark or Very Dark. Touch the “Brightness” key to cycle through the options.

**Display Mode**
The display can be adjusted to fit the level of lighting in the vehicle. Touch the “Display Mode” key to cycle through the options. “Day” and “Night” modes are suited for the respective times of day, while “Automatic” controls the display automatically.

**Scroll Direction**
The direction that menus scroll can be adjusted. Choose either “up” or “down”.

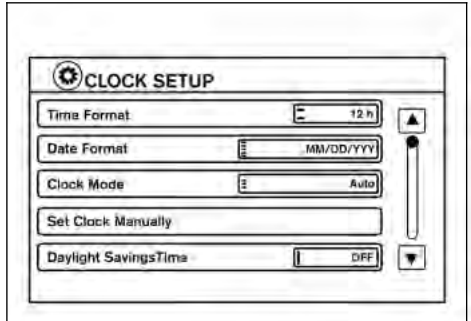

LHA2250

**Clock Settings:**

Select the “Clock Settings” key to adjust the time and the appearance of the clock on the display. The following settings can be adjusted:

**Time Format**
The clock can be set to 12 hours or 24 hours.

**Date Format**
Select from five possible formats of displaying the day, month and year.

**Clock Mode**
Select the mode for the clock. “Auto” uses the system’s GPS to automatically maintain the time. “Manual” allows you to set the clock using the “Set Clock Manually” key. “Time Zone” maintains the time based upon the zone selected when selecting the “Time Zone” key.

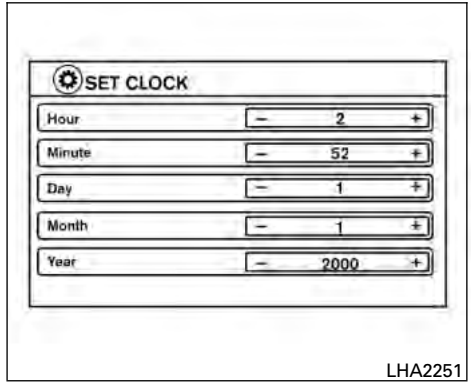

LHA2251

**Set Clock Manually**
When this setting is activated, the clock can be set manually. Touch the “+” or “-” keys to adjust the hours, minutes, day, month and year up or down. “Clock Mode” must be set to “Manual” for this option to be available.

**Daylight Savings Time**
When this setting is activated, daylight savings time is on. Touch the “Daylight Savings Time” key to toggle the setting on or off.

**Time Zone**
Choose the applicable time zone from the list.

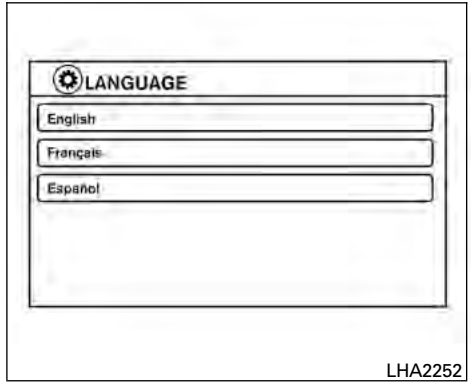

LHA2252

**Language:**

Select the “Language” key to adjust the language used by the system. The language can be set to English, Français or Español.

**Touchscreen click:**

Select the “Touchscreen Click” key to toggle the touchscreen click feature on or off. When activated, a click sound will be heard every time a key on the screen is touched.

**System Beeps:**

Select the “System Beeps” key to toggle the system beep tones feature on or off. When activated, a beep sound will be heard when a pop-up message appears on the screen or a button on the unit (such as the ☼/☽ button) is pressed and held for two seconds.

**Reset all settings/memory:**

Select the “Reset All Settings/Memory” key to return all settings to default and to clear the memory.

## Info

For information about the “Info” key, see the separate Navigation System Owner’s Manual.

## XM

For XM setup, refer to “Audio system” in this section.

## ☼/☽ BUTTON

To change the display brightness, press the ☼/☽ button. Pressing the button again will change the display to the day or the night display.

If no operation is performed within 5 seconds, the display will return to the previous display.

Press and hold the ☼/☽ button for more than two seconds to turn the display off. Press the button again to turn the display on.

# REARVIEW MONITOR (if so equipped)

When the shift selector is shifted into the R (Reverse) position, the monitor display shows a rearward view from the vehicle.

**⚠WARNING**

- **The system is designed as an aid to the driver in detecting large stationary objects to help avoid damaging the vehicle. The system will not detect small objects below the bumper, and may not detect objects close to the bumper or on the ground.**
- **The RearView Monitor is a convenience but it is not a substitute for proper backing. Always turn and check that it is safe to do so before backing up. Always back up slowly.**
- **Objects viewed in the RearView Monitor differ from actual distance because a wide-angle lens is used.**
- **Make sure that the trunk is securely closed when backing up.**
- **Do not put anything on the rearview camera. The rearview camera is installed beside the license plate light.**
- **When washing the vehicle with high-pressure water, be sure not to spray it around the camera. Otherwise, water may enter the camera unit causing water condensation on the lens, a malfunction, fire or an electric shock.**
- **Do not strike the camera. It is a precision instrument. Otherwise, it may malfunction or cause damage resulting in a fire or an electric shock.**

**⚠CAUTION**

**There is a plastic cover over the camera. Do not scratch the cover when cleaning dirt or snow from the cover.**

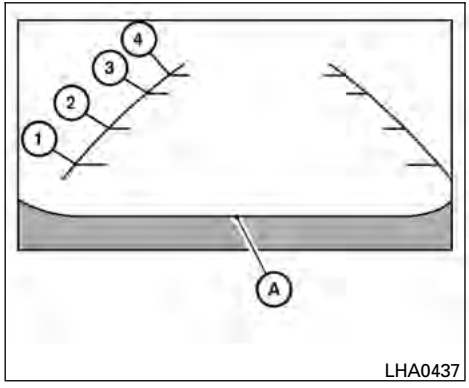

LHA0437

## HOW TO READ THE DISPLAYED LINES

Guiding lines which indicate the vehicle width and distances to objects with reference to the vehicle body line Ⓐ are displayed on the monitor.

**Distance guide lines:**

Indicate distances from the vehicle body.

- Red line ①: approx. 1.5 ft. (0.5 m)
- Yellow line ②: approx. 3 ft (1 m)
- Green line ③: approx. 7 ft (2 m)
- Green line ④: approx. 10 ft (3 m)

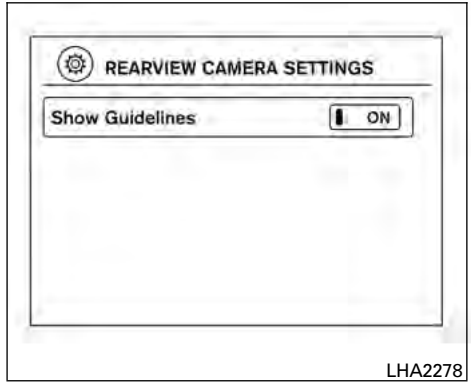

LHA2278

The on-screen guidelines can be set to on or off.

**With the shift selector in the Reverse (R) position:**

Press the CAMERA button to toggle the feature on and off.

**With the shift selector in any position other than the Reverse (R) position:**

1. Press the CAMERA button.
2. Select the “Show Guidelines” key to toggle the feature on or off.

## DIFFERENCE BETWEEN PREDICTED AND ACTUAL DISTANCES

The distance guide line and the vehicle width guide line should be used as a reference only when the vehicle is on a level, paved surface. The distance viewed on the monitor is for reference only and may be different than the actual distance between the vehicle and displayed objects.

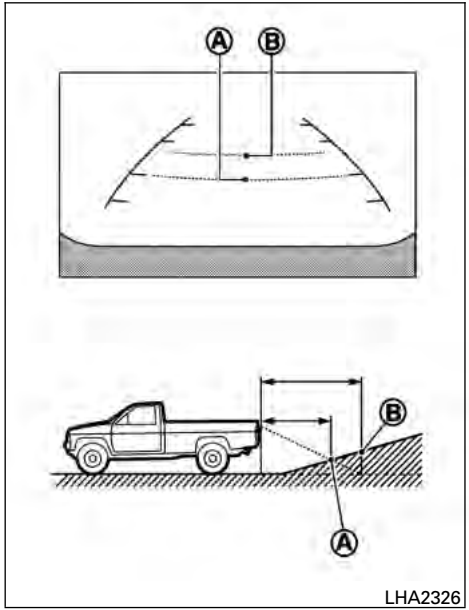


## Backing up on a steep uphill

When backing up the vehicle up a hill, the distance guide lines and the vehicle width guide lines are shown closer than the actual distance. For example, the display shows 3 ft (1.0 m) to the place Ⓐ, but the actual 3 ft (1.0 m) distance on the hill is the place Ⓑ. Note that any object on the hill is further than it appears on the monitor.

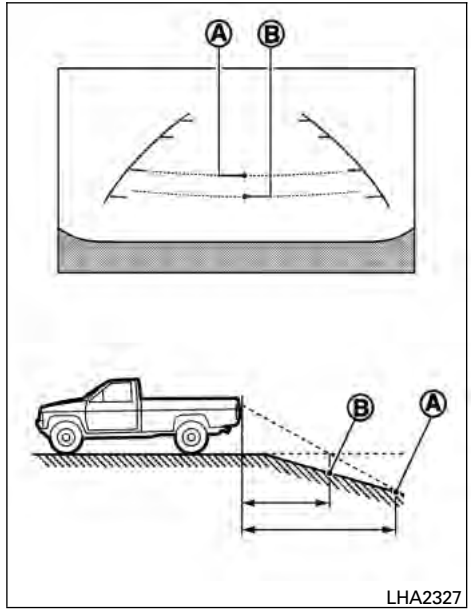


## Backing up on a steep downhill

When backing up the vehicle down a hill, the distance guide lines and the vehicle width guide lines are shown farther than the actual distance. For example, the display shows 3 ft (1.0 m) to the place Ⓐ, but the actual 3 ft (1.0 m) distance on

the hill is the place Ⓑ. Note that any object on the hill is closer than it appears on the monitor.

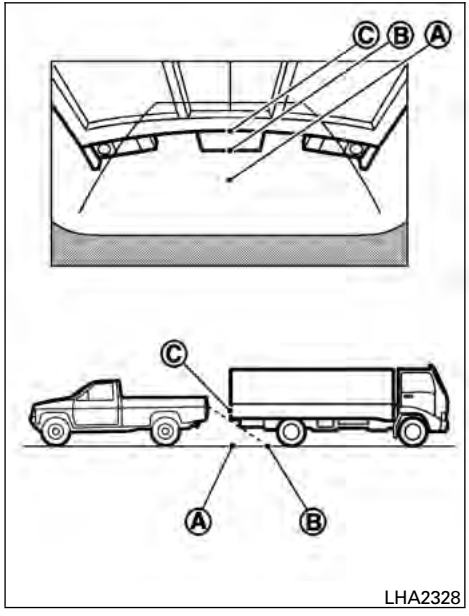


## Backing up behind a projecting object

The position Ⓒ is shown farther than the position Ⓑ in the display. However, the position Ⓒ is actually at the same distance as the position Ⓐ. The vehicle may hit the object when backing up to the position Ⓐ if the object projects over the actual backing up course.

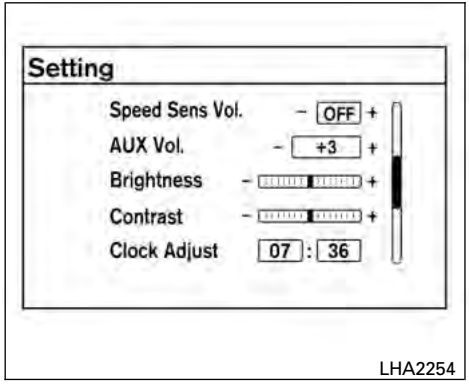


**Without Navigation System**

## ADJUSTING THE SCREEN

The procedure for adjusting the quality of the screen differs depending on the type of screen present on the vehicle.

For vehicles without Navigation System:

1. Press the ENTER/SETTING button.
2. Turn the TUNE-SCROLL knob to highlight the “Brightness” or “Contrast” key.
3. Press the ENTER/SETTING button.
4. Adjust the level using the TUNE-SCROLL knob and then press the ENTER/SETTING button to apply the adjustment.

- Do not adjust the Brightness or Contrast of the RearView Monitor while the vehicle is moving.

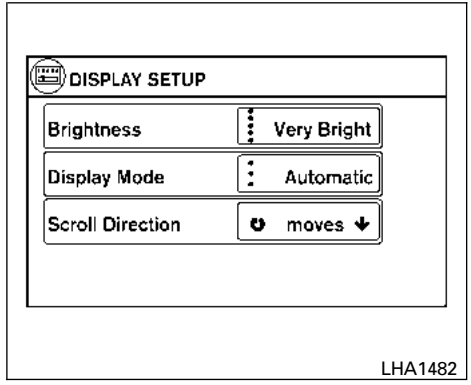


**With Navigation System**

For vehicles with Navigation System:

1. Press the MENU button.
2. Select the “Settings” key.
3. Select the “System” key.
4. Select the “Display” key.
5. Touch the “Brightness key and adjust the level to the desired setting.

- Do not adjust the display of the RearView Monitor while the vehicle is moving.

## OPERATING TIPS

**⚠ CAUTION**

- **Do not use alcohol, benzine or thinner to clean the camera. This will cause discoloration. To clean the camera, wipe with a cloth dampened with a diluted mild cleaning agent and then wipe with a dry cloth.**
- **Do not damage the camera as the monitor screen may be adversely affected.**

- When the shift selector is shifted to R (Reverse), the monitor screen automatically changes to the RearView Monitor mode. However, the radio can be heard.
- It may take some time until the RearView Monitor is displayed after the shift selector has been shifted to R (Reverse). Objects may be distorted momentarily until the RearView Monitor screen is displayed completely. When the shift selector is returned to a position other than R (Reverse), it may take some time until the screen changes. Objects on the screen may be distorted until they are completely displayed.
- When the temperature is extremely high or low, the screen may not clearly display objects. This is not a malfunction.
- When strong light directly enters the camera, objects may not be displayed clearly.
- Vertical lines may be seen in objects on the screen. This is due to strong reflected light from the bumper. This is not a malfunction.
- The screen may flicker under fluorescent light. This is not a malfunction.
- The colors of objects on the RearView Monitor may differ somewhat from those of the actual object.
- When the contrast of objects is low at night, pressing the SETTING button or MENU button may not change the brightness.
- Objects on the monitor may not be clear in a dark place or at night.
- If dirt, rain or snow attaches to the camera, the RearView Monitor may not display objects. Clean the camera.
- Do not use body wax on the camera window. If body wax does get on the camera window, wipe off the wax with a clean cloth dampened with mild detergent diluted with water.

## VENTS

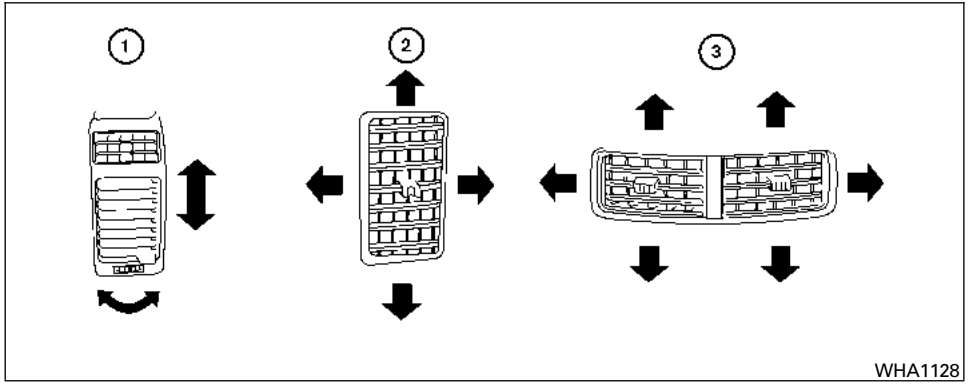


Adjust air flow direction for the driver's and passenger's side vents ①, center vents ②, and rear passengers' (if so equipped) vents ③ by moving the vent slide and/or vent assemblies.

## HEATER AND AIR CONDITIONER (manual) (Type A) (if so equipped)

**⚠WARNING**

- **The air conditioner cooling function operates only when the engine is running.**
- **Do not leave children or adults who would normally require the assistance of others alone in your vehicle. Pets should also not be left alone. They could accidentally injure themselves or others through inadvertent operation of the vehicle. Also, on hot, sunny days, temperatures in a closed vehicle could quickly become high enough to cause severe or possibly fatal injuries to people or animals.**
- **Do not use the recirculation mode for long periods as it may cause the interior air to become stale and the windows to fog up.**

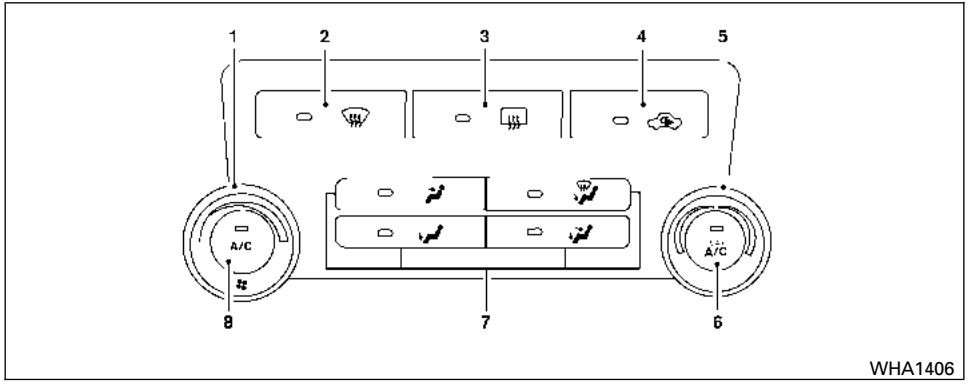


**Type A**

1. Fan speed control dial
2. Front window defroster button
3. Rear window defroster button
4. Air recirculation button
5. Temperature control dial
6. Max A/C button
7. Air flow control buttons
8. Air conditioner ON/OFF button

## CONTROLS

### Fan control dial

The fan control dial turns the fan on and off, and controls fan speed.

### Air flow control buttons

The air flow control buttons allow you to select the air flow outlets.

MAX A/C — Air flows from center and side vents with maximum cooling (air conditioning).

— Air flows from center and side vents.

— Air flows from center and side vents and the front and rear floor outlets.

— Air flows mainly from the front and rear floor outlets.

— Air flows from defroster outlets and the front and rear floor outlets.

### Temperature control dial

The temperature control dial allows you to adjust the temperature of the outlet air. To lower the temperature, turn the dial to the left. To increase the temperature, turn the dial to the right.

### Air recirculation button

**ON position:**

Push the button to recirculate air inside the vehicle.

Push the button to the on position when:

- driving on a dusty road.
- to prevent traffic fumes from entering passenger compartment.
- for maximum cooling when using the air conditioner.

The air recirculation mode is only functional when the air flow control mode is in the following positions: or .

**OFF position:**

Push the button again to turn air recirculation off. Outside air is drawn into the passenger compartment and distributed through the selected outlet.

Use the off position for normal heater or air conditioner operation.

## A/C Air conditioner button

Start the engine, turn the fan control dial to the desired position and push the A/C button to turn on the air conditioner. The indicator light comes on when the air conditioner is operating. To turn off the air conditioner, push the A/C button again.

**The air conditioner cooling function operates only when the engine is running.**

## HEATER OPERATION

### Heating

This mode is used to direct heated air to the foot outlets. Some air also flows from the defrost outlets.

1. Press the button to the OFF position for normal heating. The indicator light on the button will go off.
2. Press the air flow control button.
3. Turn the fan control dial to the desired position.
4. Turn the temperature control dial to the desired position between the middle and the hot position.

### Ventilation

This mode directs outside air to the side and center vents.

1. Press the button to the OFF position. The indicator light on the button will go off.
2. Press the air flow control button.
3. Turn the fan control dial to the desired position.
4. Turn the temperature control dial to the desired position.

### Defrosting or defogging

This mode directs the air to the defrost outlets to defrost/defog the windows.

1. Turn the air flow control dial to the position.
2. Turn the fan control dial to the desired position.
3. Turn the temperature control dial to the desired position between the middle and the hot position.

- To quickly remove ice or fog from the windows, turn the fan control dial to the right and the temperature control to the full HOT position.
- When the position is selected, the air conditioner automatically turns on (however, the indicator light on the A/C button will not come on) if the outside temperature is more than 36°F (2°C). If in defrost mode for more than one minute, the air conditioning system will continue to operate until the vehicle is shut off, the fan is turned off or the A/C button is used to turn off the compressor, even if the air flow control dial is turned to a position other than the position. This dehumidifies the air which helps defog the windshield. The mode automatically turns off, allowing outside air to be drawn into the passenger compartment to further improve the defogging performance.

## Bi-level heating

The bi-level mode directs warmed air to the side and center vents and to the front and rear floor outlets.

1. Press the button to the OFF position. The indicator light on the button will go off.
2. Press the air flow control button.
3. Turn the fan control dial to the desired position.
4. Turn the temperature control dial to the desired position.

## Heating and defogging

This mode heats the interior and defogs the windshield.

1. Press the air flow control button.
2. Turn the fan control dial to the desired position.
3. Turn the temperature control dial to the desired position between the middle and the hot position.

- When the position is selected, the air conditioner automatically turns on (however, the indicator light on the A/C button will not come on) if the outside temperature is more than 36°F (2°C). If in defrost mode for more than one minute, the air conditioning system will continue to operate until the vehicle is shut off, the fan is turned off or the A/C button is used to turn off the compressor, even if the air flow control dial is turned to a position other than the position. This dehumidifies the air which helps defog the windshield. The mode automatically turns off, allowing outside air to be drawn into the passenger compartment to further improve the defogging performance.

## Operating tips

**Clear snow and ice from the wiper blades and air inlet in front of the windshield. This improves heater operation.**

# AIR CONDITIONER OPERATION

Start the engine, turn the fan control dial to the desired position, and push in the A/C button to activate the air conditioner. When the air conditioner is on, cooling and dehumidifying functions are added to the heater operation.

**The air conditioner cooling function operates only when the engine is running.**

## Cooling

This mode is used to cool and dehumidify the air.

1. Press the button to the OFF position.
2. Press the air flow control button.
3. Turn the fan control dial to the desired position.
4. Press the A/C button. The indicator light on the A/C button will come on.
5. Turn the temperature control dial to the desired position.

- For quick cooling when the outside temperature is high, push the button to the ON position. The indicator light on the button will come on. Be sure to return the to the OFF position for normal cooling. The indicator light on the button will go off. You may also select MAX A/C for quick cooling.

## Dehumidified heating

This mode is used to heat and dehumidify the air.

1. Press the button to the OFF position. The indicator light on the button will go off.
2. Press the air flow control button.
3. Turn the fan control dial to the desired position.
4. Press the A/C button on. The indicator light on the A/C button will come on.
5. Turn the temperature control dial to the desired position.

## Operating tips

- Keep the windows closed while the air conditioner is in operation.
- After parking in the sun, drive for 2 or 3 minutes with the windows open to vent hot air from the passenger compartment. Then, close the windows. This allows the air conditioner to cool the interior more quickly.
- **The air conditioning system should be operated for approximately 10 minutes at least once a month. This helps prevent damage to the system due to lack of lubrication.**
- A visible mist may be seen coming from the ventilators in hot, humid conditions as the air is cooled rapidly. This does not indicate a malfunction.
- **If the engine coolant temperature gauge indicates engine coolant temperature over the normal range, turn the air conditioner off. See "If your vehicle overheats" in the "In case of emergency" section of this manual.**

## AIR FLOW CHARTS

The following charts show the button and dial positions for **MAXIMUM AND QUICK** heating, cooling or defrosting. For additional information on heating and cooling see "Heater and air conditioner" in this section. **The air recirculation ( ) button should always be in the OFF position for heating and defrosting.**

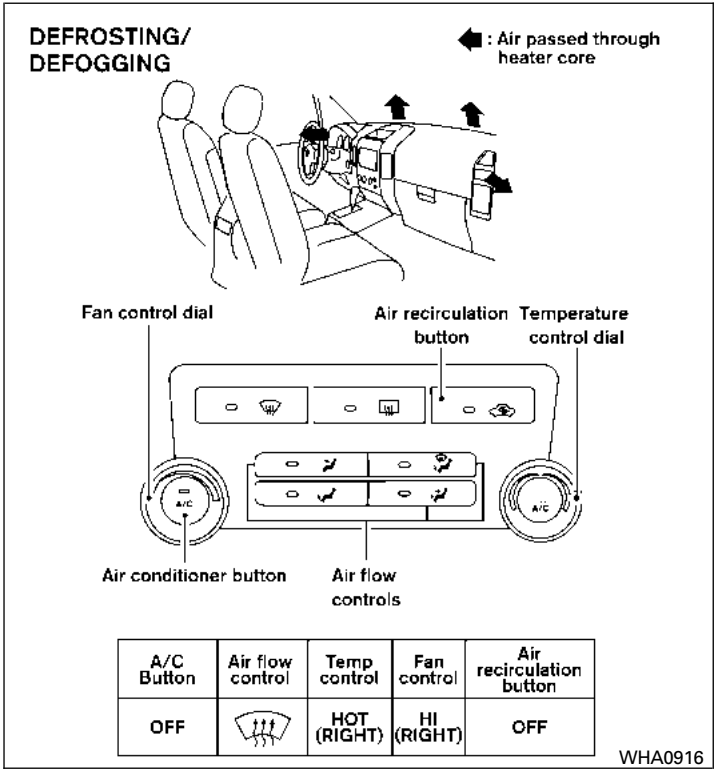
DEFROSTING/
DEFOGGING
: Air passed through heater core
Fan control dial
Air recirculation button
Temperature control dial
Air conditioner button
Air flow controls
A/C Button
Air flow control
Temp control
Fan control
Air recirculation button
OFF
HOT (RIGHT)
HI (RIGHT)
OFF
WHA0916

**Type A**

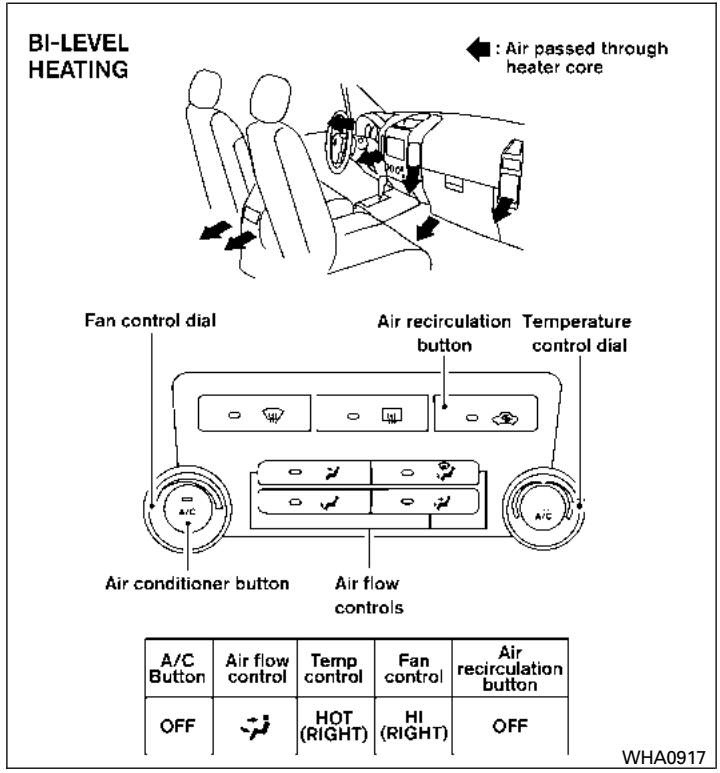
BI-LEVEL
HEATING
: Air passed through heater core
Fan control dial
Air recirculation button
Temperature control dial
Air conditioner button
Air flow controls
A/C Button
Air flow control
Temp control
Fan control
Air recirculation button
OFF
HOT (RIGHT)
HI (RIGHT)
OFF
WHA0917

**Type A**

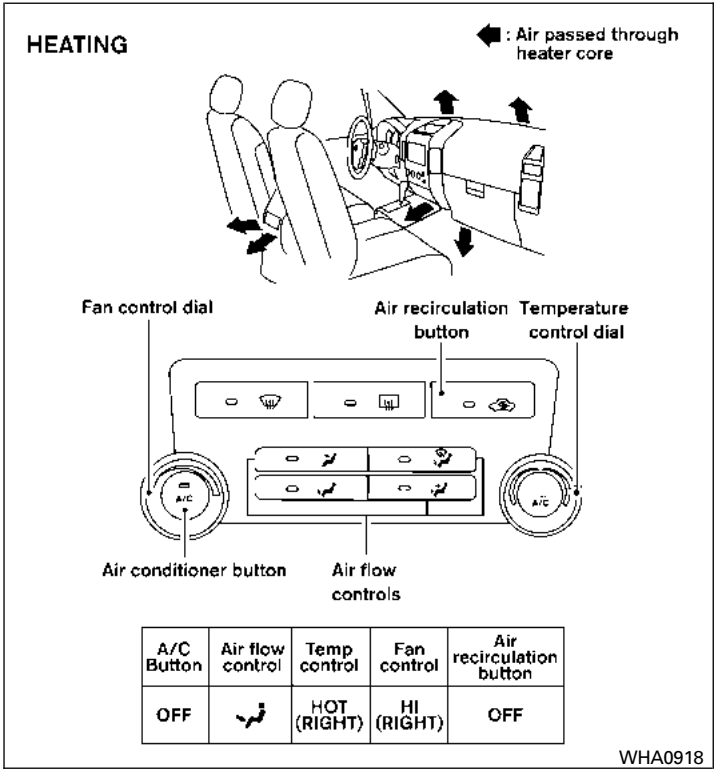
HEATING
: Air passed through heater core
Fan control dial
Air recirculation button
Temperature control dial
Air conditioner button
Air flow controls
A/C Button
Air flow control
Temp control
Fan control
Air recirculation button
OFF
HOT (RIGHT)
HI (RIGHT)
OFF
WHA0918

**Type A**

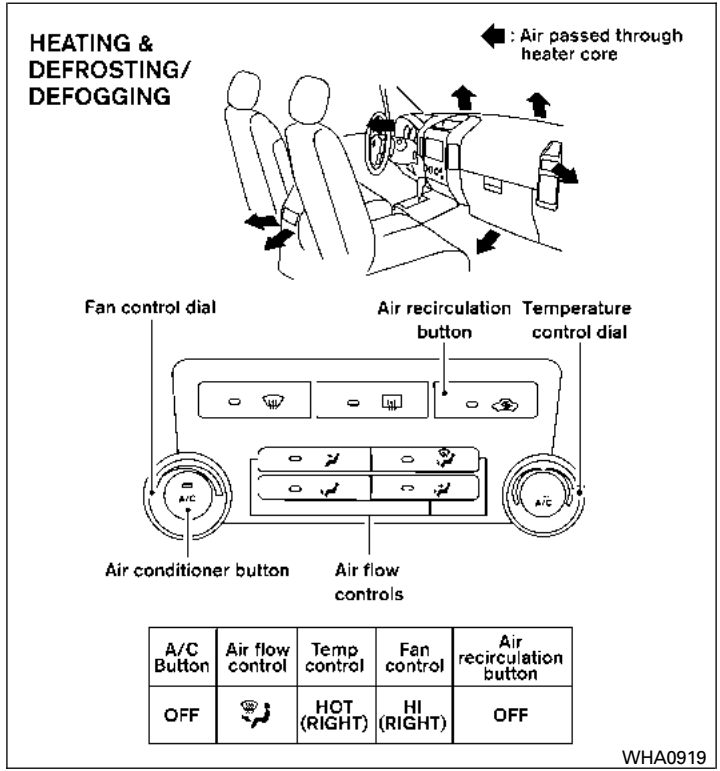
HEATING & DEFROSTING/ DEFOGGING
: Air passed through heater core
Fan control dial
Air recirculation button
Temperature control dial
Air conditioner button
Air flow controls
A/C Button
Air flow control
Temp control
Fan control
Air recirculation button
OFF
HOT (RIGHT)
HI (RIGHT)
OFF
WHA0919

**Type A**

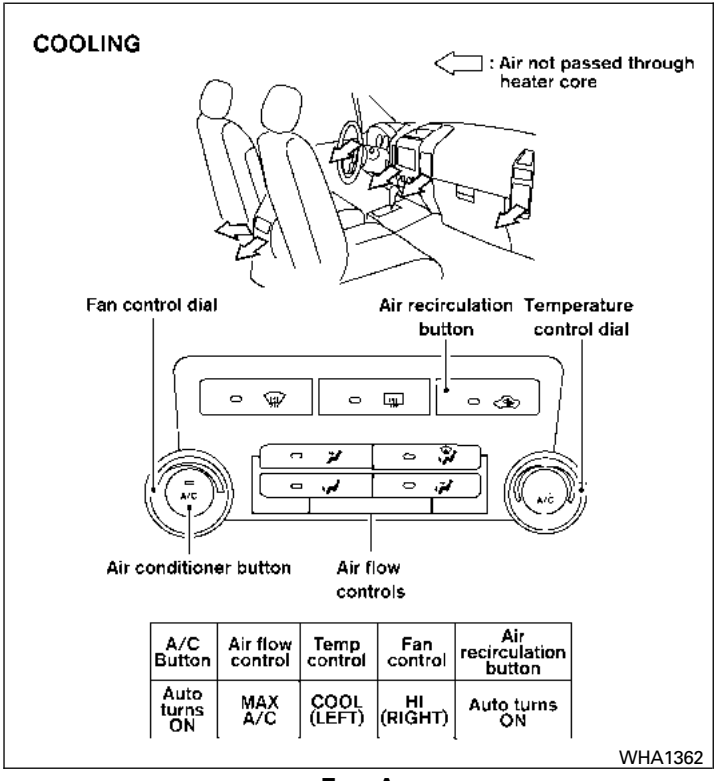


| A/C Button | Air flow control | Temp control | Fan control | Air recirculation button |
|---|---|---|---|---|
| Auto turns ON | MAX A/C | COOL (LEFT) | HI (RIGHT) | Auto turns ON |

**Type A**

## HEATER AND AIR CONDITIONER (manual) (Type B) (if so equipped)

**⚠WARNING**

- **The air conditioner cooling function operates only when the engine is running.**
- **Do not leave children or adults who would normally require the assistance of others alone in your vehicle. Pets should also not be left alone. They could accidentally injure themselves or others through inadvertent operation of the vehicle. Also, on hot, sunny days, temperatures in a closed vehicle could quickly become high enough to cause severe or possibly fatal injuries to people or animals.**
- **Do not use the recirculation mode for long periods as it may cause the interior air to become stale and the windows to fog up.**

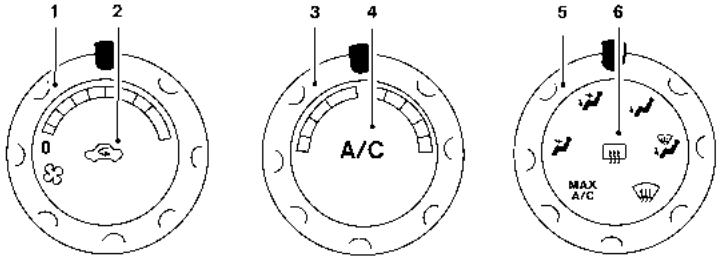


WHA0535

**Type B**

1. Fan speed control dial
2. Air recirculation button
3. Temperature control dial
4. Air conditioner button
5. Air flow control dial
6. Rear window defroster switch (if so equipped)

### CONTROLS

#### Fan control dial

The fan control dial turns the fan on and off, and controls fan speed.

#### Air flow control dial

The air flow control dial allows you to select the air flow outlets.

MAX A/C — Air flows from center and side vents with maximum cooling (air conditioning).

— Air flows from center and side vents.

— Air flows from center and side vents and the front and rear floor outlets.

— Air flows mainly from the front and rear floor outlets.

— Air flows from defroster outlets and the front and rear floor outlets.

— Air flows mainly from defroster outlets.

The air flow control dial also has intermediate positions which allow the air flow to be distributed between 2 of the icon positions on the air flow control dial.

## Temperature control dial

The temperature control dial allows you to adjust the temperature of the outlet air. To lower the temperature, turn the dial to the left. To increase the temperature, turn the dial to the right.

## Air recirculation button

**ON position:**

Push the button to recirculate air inside the vehicle.

Push the button to the on position when:

- driving on a dusty road.
- to prevent traffic fumes from entering passenger compartment.
- for maximum cooling when using the air conditioner.

The air recirculation mode is only functional when the air flow control mode is in the following positions: or .

**OFF position:**

Push the button again to turn air recirculation off. Outside air is drawn into the passenger compartment and distributed through the selected outlet.

Use the off position for normal heater or air conditioner operation.

## A/C Air conditioner button

Start the engine, turn the fan control dial to the desired position and push the A/C button to turn on the air conditioner. A/C will appear on the display when the air conditioner is operating. To turn off the air conditioner, push the A/C button again. The display will show A/C OFF.

**The air conditioner cooling function operates only when the engine is running.**

## Rear window and outside mirror (if so equipped) defroster switch

For more information about the rear window and outside mirror (if so equipped) defroster switch, see “Rear window and outside mirror defroster switch” in the “Instruments and controls” section of this manual.

# HEATER OPERATION

## Heating

This mode is used to direct heated air to the foot outlets. Some air also flows from the defrost outlets.

1. Push the button to the OFF position for normal heating. The indicator light on the button will go off. ( will appear on the display, if so equipped.)
2. Turn the air flow control dial to the position.
3. Turn the fan control dial to the desired position.
4. Turn the temperature control dial to the desired position between the middle and the hot position.

## Ventilation

This mode directs outside air to the side and center vents.

1. Push the button to the OFF position. The indicator light on the button will go off. ( will appear on the display, if so equipped.)

2. Turn the air flow control dial to the position.
3. Turn the fan control dial to the desired position.
4. Turn the temperature control dial to the desired position.

## Defrosting or defogging

This mode directs the air to the defrost outlets to defrost/defog the windows.

1. Turn the air flow control dial to the position.
2. Turn the fan control dial to the desired position.
3. Turn the temperature control dial to the desired position between the middle and the hot position.

- To quickly remove ice or fog from the windows, turn the fan control dial to the right and the temperature control to the full HOT position.
- When the position is selected, the air conditioner automatically turns on (however, the indicator light on the A/C button will not come on) if the outside temperature is more than 36°F (2°C). If in defrost mode for more than one minute, the air conditioning system will continue to operate until the vehicle is shut off. This dehumidifies the air which helps defog the windshield. The mode automatically turns off, allowing outside air to be drawn into the passenger compartment to further improve the defogging performance.

## Bi-level heating

The bi-level mode directs warmed air to the side and center vents and to the front and rear floor outlets.

1. Push the button to the OFF position. The indicator light on the button will go off. ( will appear on the display, if so equipped.)
2. Turn the air flow control dial to the position.
3. Turn the fan control dial to the desired position.
4. Turn the temperature control dial to the desired position.

## Heating and defogging

This mode heats the interior and defogs the windshield.

1. Turn the air flow control dial to the position.
2. Turn the fan control dial to the desired position.
3. Turn the temperature control dial to the desired position between the middle and the hot position.

- When the position is selected, the air conditioner automatically turns on (however, the indicator light on the A/C button will not come on and A/C will not appear on the display, if so equipped) if the outside temperature is more than 36°F (2°C). If in the mode for more than one minute, the air conditioning system will continue to operate until the vehicle is shut off. This dehumidifies the air which helps defog the windshield. The mode automatically turns off, allowing outside air to be drawn into the passenger compartment to further improve the defogging performance.

## Operating tips

**Clear snow and ice from the wiper blades and air inlet in front of the windshield. This improves heater operation.**

# AIR CONDITIONER OPERATION

Start the engine, turn the fan control dial to the desired position, and push in the A/C button to activate the air conditioner. When the air conditioner is on, cooling and dehumidifying functions are added to the heater operation.

**The air conditioner cooling function operates only when the engine is running.**

## Cooling

This mode is used to cool and dehumidify the air.

1. Push the button to the OFF position.
2. Turn the air flow control dial to the position.
3. Turn the fan control dial to the desired position.
4. Push the A/C button. The indicator light on the A/C button will come on. (A/C will appear on the display, if so equipped.)
5. Turn the temperature control dial to the desired position.

- For quick cooling when the outside temperature is high, push the button to the ON position. The indicator light on the button will come on. ( will appear on the display, if so equipped.) Be sure to return the to the OFF position for normal cooling. The indicator light on the button will go off. ( will appear on the display, if so equipped.) You may also select MAX A/C for quick cooling.

## Dehumidified heating

This mode is used to heat and dehumidify the air.

1. Push the button to the OFF position. The indicator light on the button will go off. ( will appear on the display, if so equipped.)
2. Turn the air flow control dial to the position.
3. Turn the fan control dial to the desired position.
4. Push the A/C button on. The indicator light on the A/C button will come on. (A/C will appear on the display, if so equipped.)
5. Turn the temperature control dial to the desired position.

## Operating tips

- Keep the windows closed while the air conditioner is in operation.
- After parking in the sun, drive for 2 or 3 minutes with the windows open to vent hot air from the passenger compartment. Then, close the windows. This allows the air conditioner to cool the interior more quickly.
- **The air conditioning system should be operated for approximately 10 minutes at least once a month. This helps prevent damage to the system due to lack of lubrication.**
- A visible mist may be seen coming from the ventilators in hot, humid conditions as the air is cooled rapidly. This does not indicate a malfunction.
- **If the engine coolant temperature gauge indicates engine coolant temperature over the normal range, turn the air conditioner off. See “If your vehicle overheats” in the “In case of emergency” section of this manual.**

## AIR FLOW CHARTS

The following charts show the button and dial positions for **MAXIMUM AND QUICK** heating, cooling or defrosting. For additional information on heating and cooling see “Heater and air conditioner” in this section. **The air recirculation ( ) button should always be in the OFF position for heating and defrosting.**

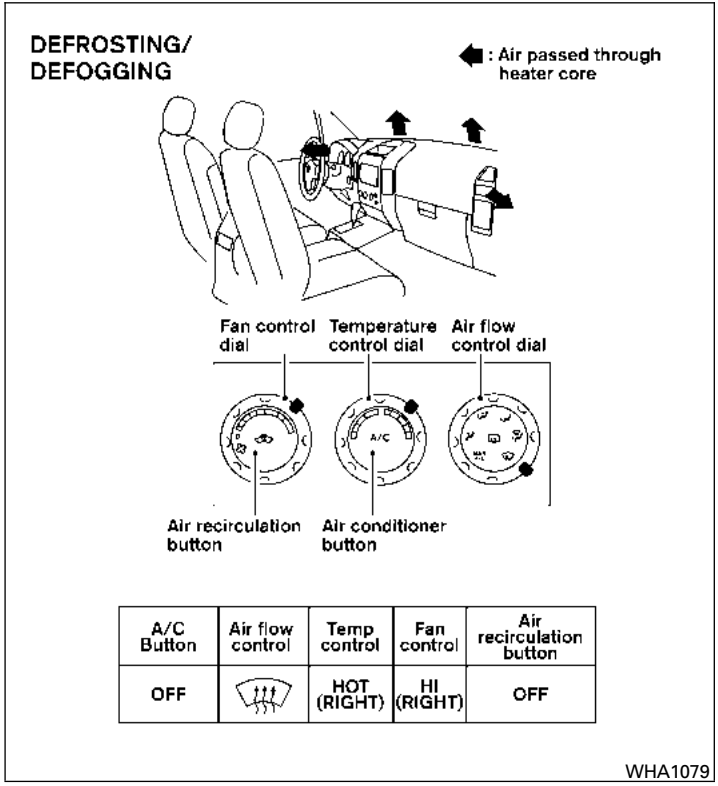


| A/C Button | Air flow control | Temp control | Fan control | Air recirculation button |
|---|---|---|---|---|
| OFF | | HOT (RIGHT) | HI (RIGHT) | OFF |

## BI-LEVEL HEATING

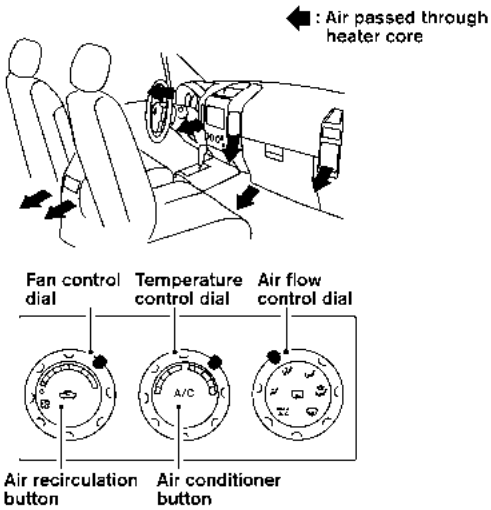


| A/C Button | Air flow control | Temp control | Fan control | Air recirculation button |
|---|---|---|---|---|
| OFF | | HOT (RIGHT) | HI (RIGHT) | OFF |

WHA1080

## HEATING

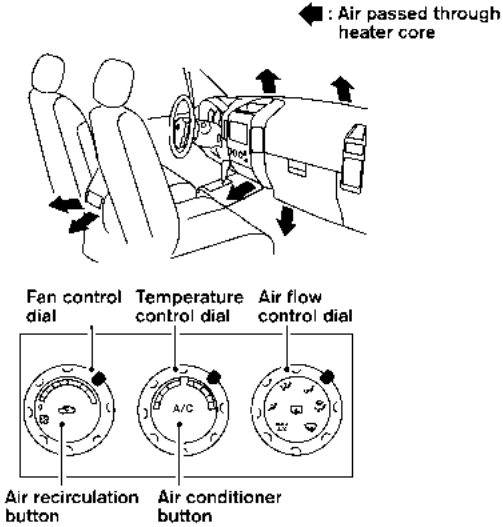


| A/C Button | Air flow control | Temp control | Fan control | Air recirculation button |
|---|---|---|---|---|
| OFF | | HOT (RIGHT) | HI (RIGHT) | OFF |

WHA1081

## HEATING & DEFROSTING/ DEFOGGING

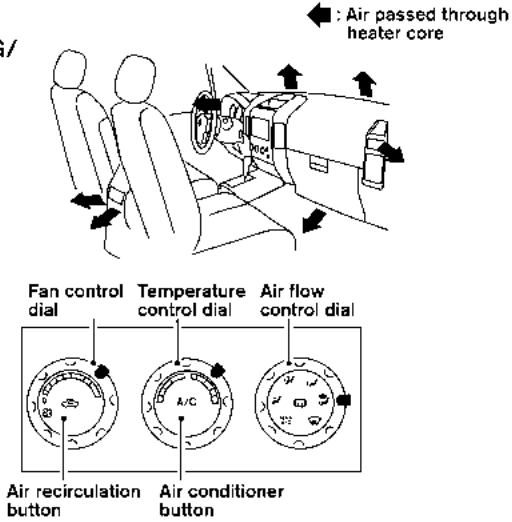


| A/C Button | Air flow control | Temp control | Fan control | Air recirculation button |
|---|---|---|---|---|
| OFF | | HOT (RIGHT) | HI (RIGHT) | OFF |

WHA1082

## COOLING

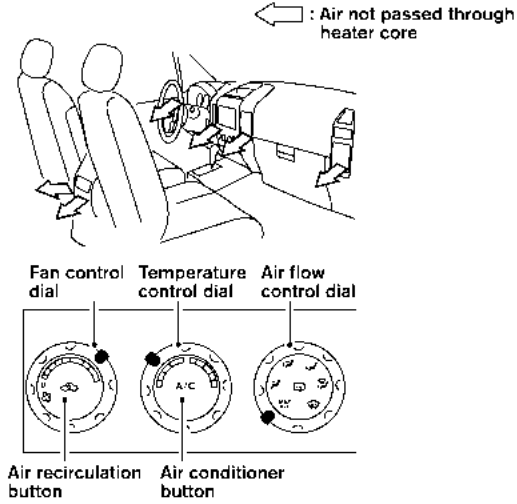


| A/C Button | Air flow control | Temp control | Fan control | Air recirculation button |
|---|---|---|---|---|
| Auto turns ON | MAX A/C | COOL (LEFT) | HI (RIGHT) | Auto turns ON |

WHA1471

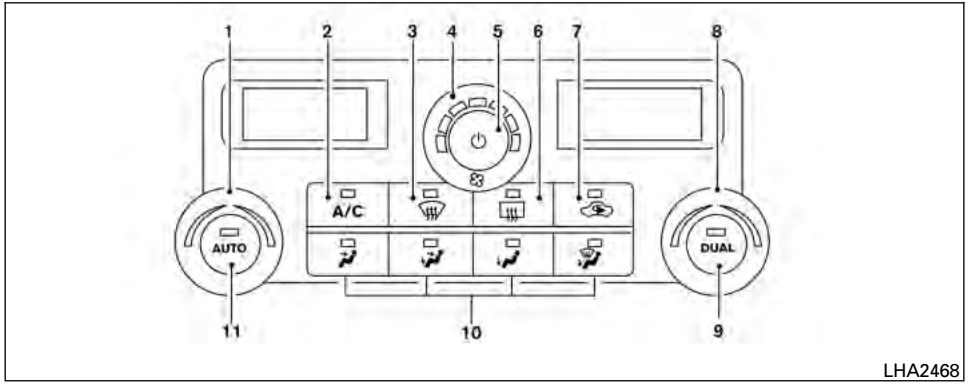

LHA2468

1. Driver temperature control dial
2. A/C ON/OFF button
3. Front window defroster button
4. Fan speed control dial
5. ⏻ (System OFF) button
6. Rear window defroster button
7. Air recirculation button
8. Passenger temperature control dial
9. DUAL button
10. Air flow control buttons
11. AUTO button

**⚠WARNING**

- **The air conditioner cooling function operates only when the engine is running.**
- **Do not leave children or adults who would normally require the assistance of others alone in your vehicle. Pets should also not be left alone. They could accidentally injure themselves or others through inadvertent operation of the vehicle. Also, on hot, sunny days, temperatures in a closed vehicle could quickly become high enough to cause severe or possibly fatal injuries to people or animals.**
- **Do not use the recirculation mode for long periods as it may cause the interior air to become stale and the windows to fog up.**

Start the engine and operate the controls to activate the air conditioner.

## AUTOMATIC OPERATION

### Cooling or heating (auto)

This mode may be normally used all year round as the system automatically works to keep a constant temperature. Air flow distribution and fan speed are also controlled automatically.

1. Press the AUTO button on.
2. Turn the temperature dial to the left or right to set the desired temperature. Driver and passenger temperatures can be set independently. Press DUAL to activate dual climate control functions. Turn the passenger's side temperature control dial to the left or right to set the desired passenger's temperature.

- Adjust the temperature dial to about 75°F (24°C) for normal operation.

- The temperature of the passenger compartment will be maintained automatically. Air flow distribution, fan speed and A/C on/off are also controlled automatically.
- A visible mist may be seen coming from the vents in hot, humid conditions as the air is cooled rapidly. This does not indicate a malfunction.

## Dehumidified defrosting or defogging

1. Press the defroster control button to turn the system on. The indicator light in the button will illuminate.
2. Turn the temperature dial to the left or right to set the desired temperature.

- To quickly remove ice from the outside of the windows, turn the manual fan control to the maximum position.
- As soon as possible after the windshield is clean, press the AUTO button to return to the auto mode.
- When the control is activated, the air conditioner will automatically be turned on at outside temperatures above 36°F (2°C). If in defrost mode for more than one minute, the air conditioning system will continue to operate until the fan control is turned OFF, the vehicle is shut off or the A/C button is used to turn off the compressor even if an air flow button other than is selected. This dehumidifies the air which helps defog the windshield. The air recirculation mode automatically turns off, allowing outside air to be drawn into the passenger compartment to further improve the defogging performance.

# MANUAL OPERATION

## Fan speed control dial

Turn the fan speed control dial left or right to manually control the fan speed or turn the system on or off.

Press the AUTO button to return to automatic control of the fan speed.

## Air recirculation

Push the air recirculation button to recirculate interior air inside the vehicle. Push the AUTO button to return to automatic mode.

The air recirculation button will not be activated when the air conditioner is in DEF, floor, or floor/defrost mode.

## Air flow control

Press the air flow control buttons to manually control air flow and select the air outlet:

- — Air flows from center and side vents.
- — Air flows from center and side vents and foot outlets.
- — Air flows mainly from foot outlets.
- — Air flows from defroster and foot outlets.
- — Air flows from defroster outlets.

## To turn system off

Press the /OFF button.

# OPERATING TIPS

- When the engine coolant temperature and outside air temperature are low, the air flow from the foot outlets may not operate for a maximum of 150 seconds. However, this is not a malfunction. After the coolant temperature warms up, air flow from the foot outlets will operate normally.

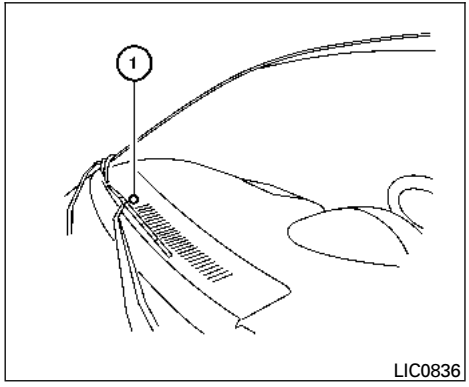


The sunload sensor ①, located on the top center of the instrument panel, helps the system maintain a constant temperature. Do not put anything on or around this sensor.

## SERVICING AIR CONDITIONER

The air conditioner system in your NISSAN vehicle is charged with a refrigerant designed with the environment in mind.

**This refrigerant does not harm the earth's ozone layer.**

Special charging equipment and lubricant is required when servicing your NISSAN air conditioner. Using improper refrigerants or lubricants will cause severe damage to your air conditioner system. See "Air conditioner system refrigerant and oil recommendations" in the "Technical and consumer information" section of this manual.

A NISSAN dealer is able to service your "environmentally friendly" air conditioning system.

**⚠WARNING**

**The air conditioner system contains refrigerant under high pressure. To avoid personal injury, any air conditioner service should be done only by an experienced technician with proper equipment.**

## AUDIO SYSTEM

### RADIO

With the ignition placed in the ACC or ON position, press the PWR (power)/VOL (volume) knob to turn the radio on. If you listen to the radio with the engine not running, the ignition should be placed in the ACC position.

Radio reception is affected by station signal strength, distance from radio transmitter, buildings, bridges, mountains and other external influences. Intermittent changes in reception quality normally are caused by these external influences.

**Using a cellular phone in or near the vehicle may influence radio reception quality.**

#### Radio reception

Your NISSAN radio system is equipped with state-of-the-art electronic circuits to enhance radio reception. These circuits are designed to extend reception range, and to enhance the quality of that reception.

However, there are some general characteristics of both FM and AM radio signals that can affect radio reception quality in a moving vehicle, even when the finest equipment is used. These characteristics are completely normal in a given reception area and do not indicate any malfunction in your NISSAN radio system.

Reception conditions will constantly change because of vehicle movement. Buildings, terrain, signal distance and interference from other vehicles can work against ideal reception. Described below are some of the factors that can affect your radio reception.

Some cellular phones or other devices may cause interference or a buzzing noise to come from the audio system speakers. Storing the device in a different location may reduce or eliminate the noise.

## FM RADIO RECEPTION

Range: FM range is normally limited to 25 – 30 mi (40 – 48 km), with monaural (single channel) FM having slightly more range than stereo FM. External influences may sometimes interfere with FM station reception even if the FM station is within 25 mi (40 km). The strength of the FM signal is directly related to the distance between the transmitter and receiver. FM signals follow a line-of-sight path, exhibiting many of the same characteristics as light. For example, they will reflect off objects.

Fade and drift: As your vehicle moves away from a station transmitter, the signals will tend to fade and/or drift.

Static and flutter: During signal interference from buildings, large hills or due to antenna position (usually in conjunction with increased distance from the station transmitter), static or flutter can be heard. This can be reduced by adjusting the treble control to reduce treble response.

Multipath reception: Because of the reflective characteristics of FM signals, direct and reflected signals reach the receiver at the same time. The signals may cancel each other, resulting in momentary flutter or loss of sound.

## AM RADIO RECEPTION

AM signals, because of their low frequency, can bend around objects and skip along the ground. In addition, the signals can be bounced off the ionosphere and bent back to earth. Because of these characteristics, AM signals are also subject to interference as they travel from transmitter to receiver.

Fading: Occurs while the vehicle is passing through freeway underpasses or in areas with many tall buildings. It can also occur for several seconds during ionospheric turbulence even in areas where no obstacles exist.

Static: Caused by thunderstorms, electrical power lines, electric signs and even traffic lights.

## SATELLITE RADIO RECEPTION (if so equipped)

When the satellite radio is used for the first time or the battery has been replaced, the satellite radio may not work properly. This is not a malfunction. Wait more than 10 minutes with satellite radio ON and the vehicle outside of any metal or large building for satellite radio to receive all of the necessary data.

No satellite radio reception is available and “NO SAT” is displayed when the SAT band option is selected unless optional satellite receiver and antenna are installed and a SiriusXM Satellite Radio service subscription is active. Satellite radio is not available in Alaska, Hawaii and Guam.

Satellite radio performance may be affected if cargo carried on the roof blocks the satellite radio signal.

If possible, do not put cargo over the satellite antenna.

A build up of ice on the satellite radio antenna can affect satellite radio performance. Remove the ice to restore satellite radio reception.

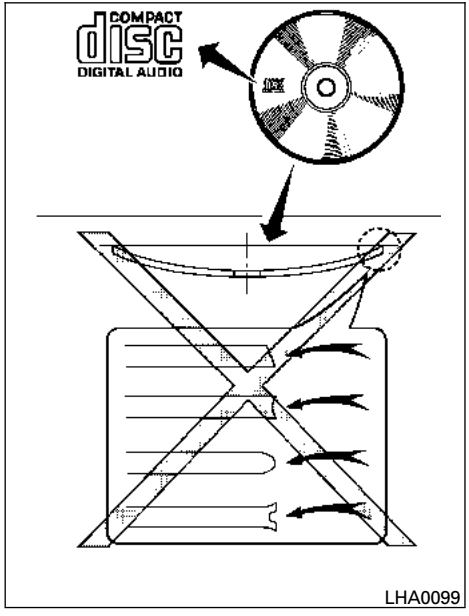


## AUDIO OPERATION PRECAUTIONS

### Compact disc (CD) player

**CAUTION**

- **Do not force a compact disc into the CD insert slot. This could damage the CD and/or CD player.**
- **Trying to load a CD with the CD door closed could damage the CD and/or CD player.**
- **Only one CD can be loaded into the CD player at a time.**

- **Only use high quality 4.7 in (12 cm) round discs that have the "COMPACT disc DIGITAL AUDIO" logo on the disc or packaging.**
- **During cold weather or rainy days, the player may malfunction due to the humidity. If this occurs, remove the CD and dehumidify or ventilate the player completely.**
- **The player may skip while driving on rough roads.**
- **The CD player sometimes cannot function when the compartment temperature is extremely high or low. Decrease/increase the temperature before use.**
- **Do not expose the CD to direct sunlight.**
- **CDs that are in poor condition or are dirty, scratched or covered with fingerprints may not work properly.**
- **The following CDs may not work properly:**
  - **Copy control compact discs (CCCD)**
  - **Recordable compact discs (CD-R)**
  - **Rewritable compact discs (CD-RW)**
- **Do not use the following CDs as they may cause the CD player to malfunction:**
  - **3.1 in (8 cm) discs with an adapter**
  - **CDs that are not round**
  - **CDs with a paper label**
  - **CDs that are warped, scratched, or have abnormal edges**
- **This audio system can only play prerecorded CDs. It has no capability to record or burn CDs.**
- **If the CD cannot be played, one of the following messages will be displayed.**

**CHECK DISC:**

- **Confirm that the CD is inserted correctly (the label side is facing up, etc.).**
- **Confirm that the CD is not bent or warped and it is free of scratches.**

**PRESS EJECT:**

**This is an error due to excessive temperature inside the player. Remove the CD by pressing the EJECT button. After a short time, reinsert the CD. The CD can be played when the temperature of the player returns to normal.**

**UNPLAYABLE:**

**The file is unplayable in this audio system (only MP3 or WMA (if so equipped) CD).**

## Compact disc with MP3 or WMA (if so equipped)

**Terms:**

- MP3 — MP3 is short for Moving Pictures Experts Group Audio Layer 3. MP3 is the most well-known compressed digital audio file format. This format allows for near "CD quality" sound, but at a fraction of the size of normal audio files. MP3 conversion of an audio track from CD-ROM can reduce the file size by approximately a 10:1 ratio with virtually no perceptible loss in quality. MP3 compression removes the redundant and irrelevant parts of a sound signal that the human ear doesn't hear.
- WMA — Windows Media Audio (WMA)* is a compressed audio format created by Microsoft as an alternative to MP3. The WMA codec offers greater file compression than the MP3 codec, enabling storage of more digital audio tracks in the same amount of space when compared to MP3s at the same level of quality.
- Bit rate — Bit rate denotes the number of bits per second used by a digital music file. The size and quality of a compressed digital audio file is determined by the bit rate used when encoding the file.
- Sampling frequency — Sampling frequency is the rate at which the samples of a signal are converted from analog to digital (A/D conversion) per second.
- Multisession — Multisession is one of the methods for writing data to media. Writing data once to the media is called a single session, and writing more than once is called a multisession.
- ID3/WMA Tag — The ID3/WMA tag is the part of the encoded MP3 or WMA file that contains information about the digital music file such as song title, artist, encoding bit rate, track time duration, etc. ID3 tag information is displayed on the Artist/song title line on the display.

* Windows® and Windows Media® are registered trademarks and trademarks in the United States of America and other countries of Microsoft Corporation of the USA.

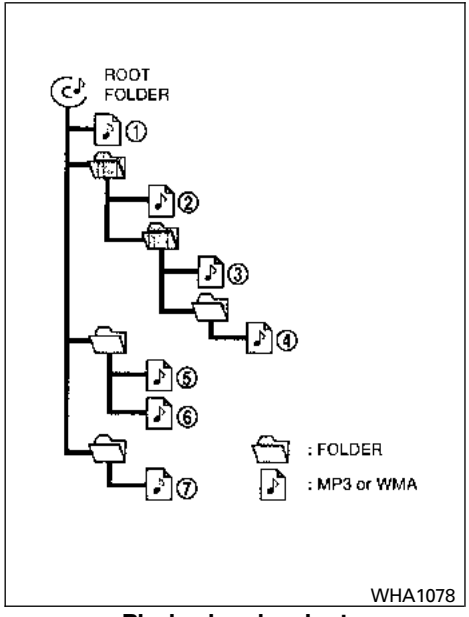


**Playback order chart**

**Playback order:**

Music playback order of a CD with MP3 or WMA files is as illustrated.

- The names of folders not containing MP3 or WMA files are not shown in the display.
- If there is a file in the top level of the disc, “Root Folder” is displayed.
- The playback order is the order in which the files were written by the writing software. Therefore, the files might not play in the desired order.

**Specification chart:**

| | | | |
|---|---|---|---|
| Supported media | | | CD, CD-R, CD-RW |
| Supported file systems | | | ISO9660 LEVEL1, ISO9660 LEVEL2, Apple ISO, Romeo, Joliet * ISO9660 Level 3 (packet writing) is not supported. |
| Supported versions*1 | MP3 | Version | MPEG1, MPEG2, MPEG2.5 |
| | | Sampling frequency | 8 kHz - 48 kHz |
| | | Bit rate | 8 kbps - 320 kbps, VBR |
| | WMA | Version | WMA7, WMA8, WMA9 |
| | | Sampling frequency | 32 kHz - 48 kHz |
| | | Bit rate | 48 kbps - 192 kbps, VBR |
| Tag information | | | ID3 tag VER1.0, VER1.1, VER2.2, VER2.3 (MP3 only) |
| Folder levels | | | Folder levels: 8, Max folders: 255 (including root folder), Files: 512 (Max. 255 files for one folder) |
| Text character number limitation | | | 128 characters |
| Displayable character codes*2 | | | 01: ASCII, 02: ISO-8859-1, 03: UNICODE (UTF-16 BOM Big Endian), 04: UNICODE (UTF-16 Non-BOM Big Endian), 05: UNICODE (UTF-8), 06: UNICODE (Non-UTF-16 BOM Little Endian) |

*1 Files created with a combination of 48 kHz sampling frequency and 64 kbps bit rate cannot be played.

*2 Available codes depend on what kind of media, versions and information are going to be displayed.

**Troubleshooting guide:**

| Symptom | Cause and Countermeasure |
|---|---|
| Cannot play | Check if the disc was inserted correctly. |
| | Check if the disc is scratched or dirty. |
| | Check if there is condensation inside the player. If there is, wait until the condensation is gone (about 1 hour) before using the player. |
| | If there is a temperature increase error, the CD player will play correctly after it returns to the normal temperature. |
| | If there is a mixture of music CD files (CD-DA data) and MP3/WMA files on a CD, only the music CD files (CD-DA data) will be played. |
| | Files with extensions other than “.MP3”,“.WMA”, “.mp3” or “.wma” cannot be played. In addition, the character codes and number of characters for folder names and file names should be in compliance with the specifications. |
| | Check if the finalization process, such as session close and disc close, is done for the disc. |
| | Check if the disc is protected by copyright. |
| Poor sound quality | Check if the disc is scratched or dirty. |
| | Bit rate may be too low. |
| It takes a relatively long time before the music starts playing. | If there are many folders or file levels on the MP3/WMA disc, or if it is a multisession disc, some time may be required before the music starts playing. |
| Music cuts off or skips | The writing software and hardware combination might not match, or the writing speed, writing depth, writing width, etc., might not match the specifications. Try using the slowest writing speed. |
| Skipping with high bit rate files | Skipping may occur with large quantities of data, such as for high bit rate data. |
| Moves immediately to the next song when playing | When a non-MP3/WMA file has been given an extension of “.MP3”, “.WMA”, .“mp3”or “.wma”, or when play is prohibited by copyright protection, there will be approximately 5 seconds of no sound and then the player will skip to the next song. |
| Songs do not play back in the desired order | The playback order is the order in which the files were written by the writing software. Therefore, the files might not play in the desired order. |

## Universal Serial Bus (USB) memory (if so equipped)

This system supports various USB memory sticks, USB hard drives and iPod® players. There are some USB devices which may not be supported with this system.

- Make sure that the USB device is connected correctly into the USB connector.
- Do not force the memory stick or USB cable into the USB connector.
- During cold weather or rainy days, the player may malfunction due to the humidity. If this occurs, remove the USB memory stick and dehumidify or ventilate the player completely.
- The player sometimes cannot function when the passenger compartment temperature is extremely high. Decrease the temperature before use.
- Do not leave the USB memory in a place prone to static electricity or where the air conditioner blows directly. The data in the USB memory may be damaged.
- Prepare the USB device by yourself because it is not equipped with the vehicle.
- The USB device cannot be formatted with this system. If you want to format the USB memory, use your personal computer.
- Partitioned USB devices may not be played correctly.
- Some characters used in other languages (Chinese, Japanese, etc.) are not displayed properly on the vehicle center screen. NISSAN recommends using English language characters with USB devices.
- Do not connect the USB device if the connector or cable is wet. Allow the cable and/or connectors to dry completely before connecting the USB device.
- Large video podcast files cause slow responses in the iPod®. The vehicle center display may momentarily black out, but it will soon recover.
- If the iPod® automatically selects large video podcast files while in the shuffle mode, the vehicle center display may momentarily black out, but it will soon recover.
- Audiobooks may not play in the same order as they appear on the iPod®.
- The iPod® nano (1st Generation) may remain in fast forward or rewind mode if it is connected during a seek operation. In this case, please manually reset the iPod®.
- The iPod® nano (2nd Generation) will continue to fast forward or rewind if it is disconnected during a seek operation.
- An incorrect song title may appear when the Play Mode is changed while using the iPod® nano (2nd generation).
- If you are using an iPod® (3rd Generation with Dock connector), do not use very long names for the song title, album name or artist name to avoid the iPod® resetting itself.

iPod® is a trademark of Apple Inc., registered in the U.S. and other countries.

## Bluetooth® streaming audio (if so equipped)

- Some Bluetooth® audio devices may not be recognized by the in-vehicle audio system.
- It is necessary to set up the wireless connection between a compatible Bluetooth® audio device and the in-vehicle Bluetooth® module before using the Bluetooth® audio.

- Operating procedure of the Bluetooth® audio will vary depending on the devices. Make sure how to operate your audio device before using it with this system.
- The Bluetooth® audio may be stopped under the following conditions:
  - Receiving a call on the Hands-Free Phone System.
  - Checking the connection to the hands-free phone.
- Do not place the Bluetooth® audio device in an area surrounded by metal or far away from the in-vehicle Bluetooth® module to prevent tone quality degradation and wireless connection disruption.
- While an audio device is connected through the Bluetooth® wireless connection, the battery power of the device may discharge quicker than usual.
- This system supports the Bluetooth® Audio Distribution Profile (A2DP, AVRCP).

BLUETOOTH® is a trademark owned by Bluetooth SIG, Inc. and licensed to Visteon and Bosch.

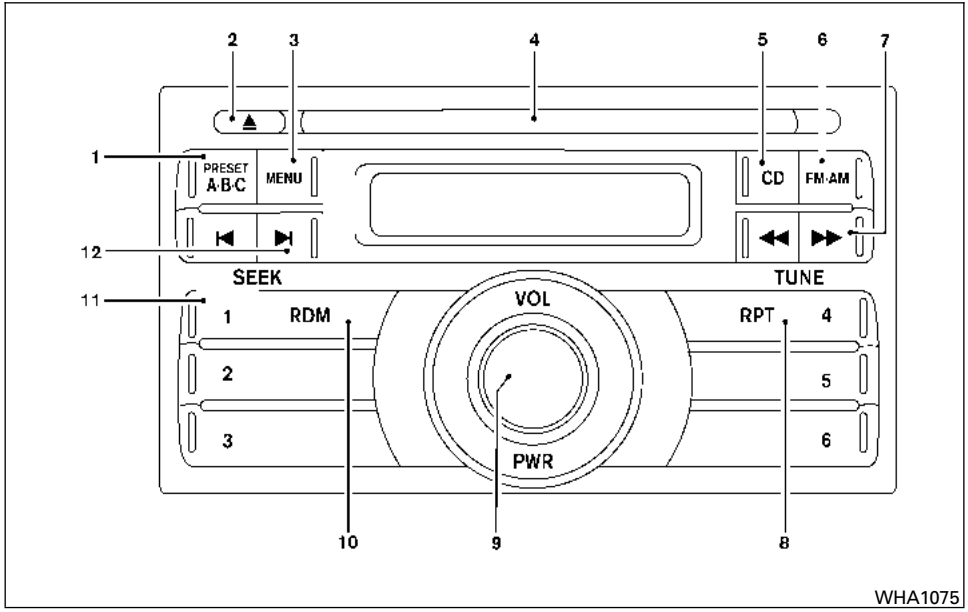


1. PRESET A·B·C button
2. ⏏ CD eject button
3. MENU button
4. CD insert slot
5. CD button
6. FM·AM button
7. TUNE buttons
8. RPT button
9. PWR button/VOL control knob
10. RDM button
11. Station select (1 - 6) buttons
12. SEEK buttons

## FM/AM RADIO WITH COMPACT DISC (CD) PLAYER (if so equipped)

For all operation precautions, see "Audio operation precautions" earlier in this section.

### Audio main operation

**Power button and VOL control knob**

Place the ignition switch in the ACC or ON position, then press the PWR (power) button. If you listen to the radio with the engine not running, place the ignition switch in the ACC position. The mode (radio or CD) that was playing immediately before the system was turned off resumes playing.

When no CD is loaded, the radio comes on. Pressing the PWR button again turns the system off.

Turn the VOL control knob to the right to increase volume or to the left to decrease volume.

**MENU button (BASS, TREBLE, FADE, BALANCE and CLOCK):**

Press the MENU button to change the mode as follows:

BAS → TRE → FAD → BAL → CLOCK → Audio → BAS

To adjust Bass, Treble, Fade and Balance, press the MENU button until the desired mode appears in the display. Press the SEEK button to adjust Bass and Treble to the desired level. You can also use the SEEK button to adjust Fade and Balance modes. Fade adjusts the sound level between the front and rear speakers and Balance adjusts the sound between the right and left speakers.

Once you have adjusted the sound quality to the desired level, press the MENU button repeatedly until the radio or CD display reappears. Otherwise, the radio or CD display will automatically reappear after about 10 seconds.

**NOTE:**

**If the clock is enabled, pressing the MENU button will change the mode as follows: BAS → TRE → FAD → BAL → CLOCK → Hour adjustment → Minute adjustment → Audio → BAS**

For more information on setting the clock, see "Clock set" later in this section.

**Clock operation**

Press the MENU button until CLOCK is displayed; use the SEEK button to turn the clock display on (CLK ON) or off (CLK OFF).

**Clock set**

If the clock is not displayed with the ignition switch in the ACC or ON position, you need to select the CLK ON mode. Press the MENU button repeatedly until CLOCK is displayed. Use the SEEK button to enable CLK ON mode.

1. Press the MENU button repeatedly until CLOCK mode appears; press the SEEK button until CLK ON appears.
2. Press the MENU button again; the hours will start flashing.
3. Press the SEEK button ⏮ or ⏭ to adjust the hour.
4. Press the MENU button again; the display will switch to the minute adjustment mode.
5. The minutes will start flashing. Press SEEK button ⏮ or ⏭ to adjust the minutes.
6. Press the MENU button again to exit the clock set mode.

The display will return to the regular clock display after 10 seconds, or press the MENU button again to return to the regular clock display.

**Resetting the time**

Hold the MENU button down and then press the TUNE/SEEK button; the time will reset as follows:

- If the displayed minutes before the reset are in the range of :00 - :29, the hour displayed before the reset will stay the same and the minutes will be reset to :00.
- If the displayed minutes before the reset are in the range of :30 - :59, the hour displayed before the reset will advance by one hour and the minutes will be reset to :00.

For example, if the MENU button and the TUNE/SEEK button are pressed while the time displayed is between 8:00 and 8:29, the display will be reset to 8:00. If the buttons were pressed while the time was between 8:30 and 8:59, the display will be reset to 9:00. At the same time the display will return to the audio.

## FM/AM radio operation

**FM·AM button:**

Press the FM·AM button to change from AM ⟷ FM reception.

The FM stereo indicator, ST, illuminates during FM stereo reception. When the stereo broadcast signal is weak, the radio automatically changes from stereo to monaural reception.

**TUNE buttons:**

**Manual tuning**

Press the TUNE ◀◀ or ▶▶ button for less than 0.5 seconds for manual tuning.

To move quickly through the channels, press and hold either TUNE ◀◀ or ▶▶ button down for more than 1.5 seconds.

**SEEK buttons:**

**SEEK tuning**

Press the SEEK |◀ or ▶| button to seek through the frequencies. Seek tuning begins from low to high frequencies, or high to low frequencies, depending on which button is pressed, and stops at the next broadcasting station. Once the highest broadcasting station is reached, the radio continues in the seek mode at the lowest broadcasting station.

**Station memory operations:**

18 stations can be set for the FM and AM radio to the A, B and C preset button in any combination of AM or FM stations.

1. Press the PRESET A·B·C button to change between storage banks. The radio displays the icon A, B or C to indicate which set of presets are active.
2. Tune to the desired station using manual TUNE or SEEK tuning. Press and hold any of the desired station memory buttons (1 – 6) until a beep sound is heard. (The radio mutes when the select button is pressed.)
3. The channel indicator will then come on and the sound will resume. Programming is now complete.
4. Other buttons can be set in the same manner.

If the battery cable is disconnected, or if the fuse opens, the radio memory will be canceled. In that case, reset the desired stations.

## Compact disc (CD) player operation

If the radio is already operating, it automatically turns off and the compact disc begins to play.

**CD button:**

When the CD button is pressed with a compact disc loaded and the radio playing, the radio turns off and the last used compact disc starts to play.

**TUNE (rewind and fast forward) buttons:**

When the TUNE ◀◀ or ▶▶ button is pressed while the compact disc is playing, the compact disc plays at an increased speed while rewinding or fast forwarding. When the button is released, the compact disc returns to normal play speed.

**SEEK buttons:**

When ▶| is pressed while the compact disc is playing, the next track following the present one starts to play from the beginning. Press ▶| several times to skip several tracks. Each time the button is pressed, the CD advances 1 additional track. The track number appears in the display window. (When the last track on the compact disc is skipped, the first track is played.)

When |◀ is pressed, the track being played returns to the beginning. Press |◀ several times to skip back several tracks. Each time the button is pressed, the CD moves back one track.

**SEEK (Scan CDs) button:**

Press and hold the SEEK button for more than 1.5 seconds to scan through the first 10 seconds of a track on the compact disc. The SCAN icon is flashed during scan mode.

The scan mode is canceled once it scans through all the tracks on the disc, or if the SEEK or button is pressed during the scan mode.

**RPT button:**

When the RPT button is pressed while the compact disc is being played, the play pattern can be changed as follows:

1 ⟷ Normal

1: The track that is currently playing will be repeated.

**RDM button:**

When the RDM button is pressed while the compact disc is being played, the play pattern can be changed as follows:

RDM ⟷ Normal

RDM: Tracks from the disc that is currently playing will be played randomly.

**CD EJECT button:**

When the button is pressed with a compact disc loaded, the compact disc will be ejected.

When the button is pressed while the compact disc is being played, the compact disc will eject and the system will turn off.

**CD IN indicator:**

CD IN indicator appears on the display when the CD is loaded with the system on.

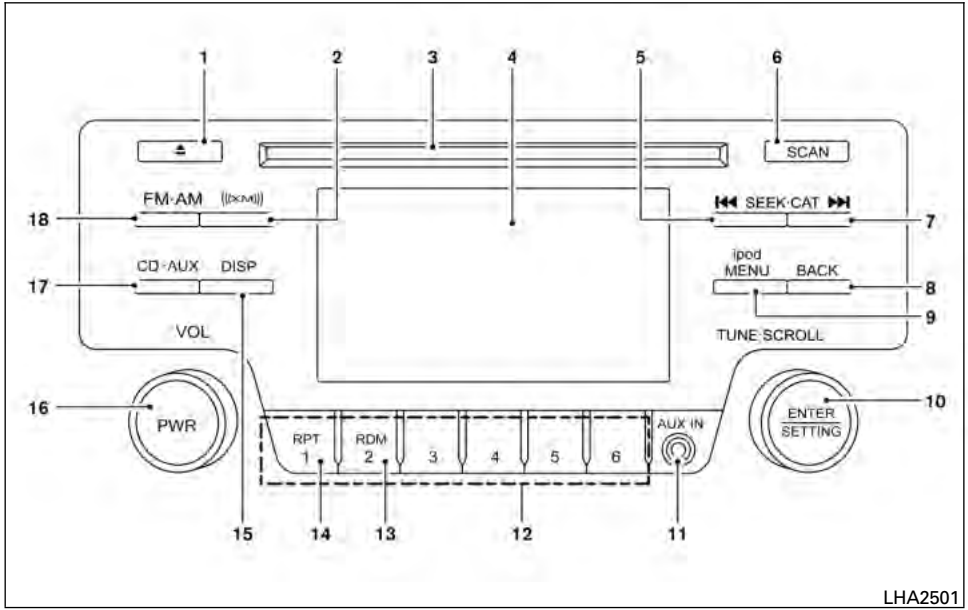


1. ⏏ CD eject button
2. XM button*
3. CD insert slot
4. Display screen
5. ⏮ SEEK button
6. SCAN button
7. ⏭ CAT button
8. BACK button
9. iPod MENU button
10. TUNE/SCROLL knob, ENTER/SETTING button
11. AUX IN jack
12. Station select (1 - 6) buttons
13. RDM button
14. RPT button
15. DISP button
16. VOL (volume) knob / PWR (power) button
17. CD▪AUX button
18. FM▪AM button

*No satellite radio reception is available when the XM button is pressed to access satellite radio stations unless optional satellite receiver and antenna are installed and an SiriusXM Satellite Radio service subscription is active. Satellite radio is not available in Alaska, Hawaii and Guam.

## FM/AM/SAT RADIO WITH COMPACT DISC (CD) PLAYER (Type A) (if so equipped)

For all operation precautions, see “Audio operation precautions” in this section.

### Audio main operation

**VOL (volume) knob / ON-OFF button:**

Place the ignition switch in the ACC or ON position and press the VOL (volume) knob / ON-OFF button while the system is off to call up the mode that was playing immediately before the system was turned off.

To turn the system off, press the VOL (volume) knob / ON-OFF button.

Turn the VOL (volume) knob / ON-OFF button to adjust the volume.

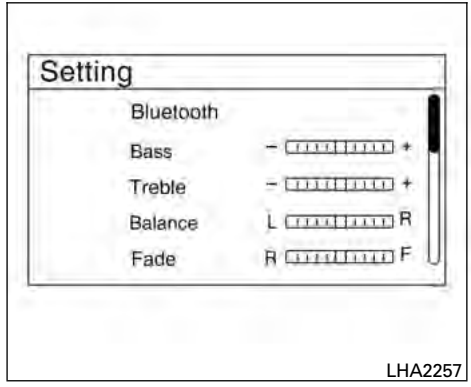

LHA2257

**SETTING button:**

Press the SETTING button to show the Settings screen on the display. Turn the TUNE/SCROLL knob to navigate the options and then press the ENTER button to make a selection.

**Bass, Treble, Balance and Fade**

Increase or decrease the level of bass, treble, balance or fade. Balance controls the level of sound between the left and right speakers. Fade controls the level of sound between the front and rear speakers.

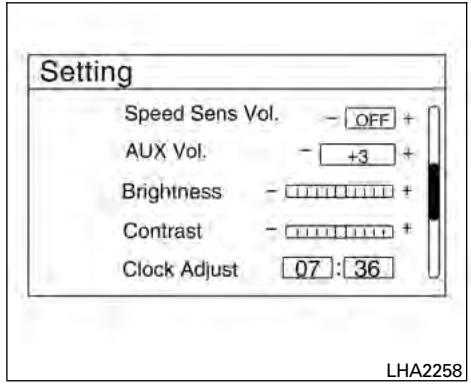

LHA2258

**Speed Sens Vol. (Speed Sensitive Volume)**

Speed Sensitive Volume adjusts the volume of the audio system as the vehicle’s driving speed changes. The feature can be turned off or set to a level of 1 to 5. Level 5 represents the highest degree of volume adjustment.

**AUX Vol.**

Choose a setting from 0 to +3 to control the boost of the incoming auxiliary device volume. A setting of 0 provides no additional boost in volume. A setting of +3 provides the greatest boost in volume.

**Brightness and Contrast**

Adjust the brightness or contrast to adjust the appearance of the display screen.

**Clock Adjust**

Press the ENTER button to highlight the hours or minutes and then use the TUNE/SCROLL knob to adjust the value. Press the ENTER button again to set the value.

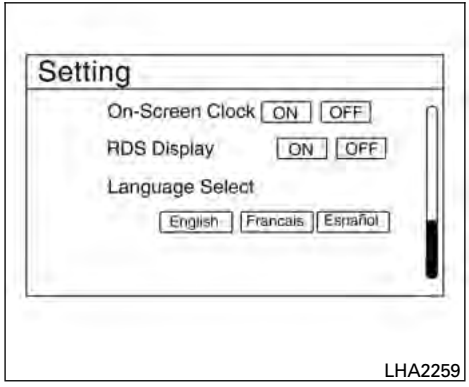


**On-Screen Clock**

Select “ON” or “OFF” to control whether or not the clock is shown in the upper right corner of the display screen.

**RDS Display**

Select “ON” or “OFF” to control whether or not RDS information is displayed on the screen while the radio is playing.

**Language Select**

Select the desired language for the system. English, Spanish and French are the available languages.

**iPod® MENU button**

This button can only be used for iPod® operations. See “iPod® player operation without Navigation System” later in this section for details about the function of this button.

## FM/AM/SAT radio operation

**FM·AM button:**

Press the FM·AM button to change the band as follows:

AM → FM1 → FM2 → AM

If another audio source is playing when the FM·AM button is pressed, the audio source playing will automatically be turned off and the last radio station played will begin playing.

The FM stereo indicator (STEREO) is shown on the screen during FM stereo reception. When the stereo broadcast signal is weak, the radio automatically changes from stereo to monaural reception.

**XM band select:**

Press the XM button to change the band as follows:

XM1* → XM2* → XM3* → XM1 (satellite, if so equipped)

When the XM button is pressed while the ignition switch is in the ACC or ON position, the radio will come on at the station last played.

The last station played will also come on when the VOL/ON·OFF control knob is pressed ON.

*When the XM button is pressed, the satellite radio reception will not be available unless an optional satellite receiver and antenna are installed and a SiriusXM Satellite Radio service subscription is active. Satellite radio is not available in Alaska, Hawaii and Guam.

If a compact disc is playing when the XM button is pressed, the compact disc will automatically be turned off and the last radio station played will come on.

**TUNE/SCROLL knob (Tuning):**

Turn the TUNE/SCROLL knob to the left or right for manual tuning.

**SEEK tuning:**

Press the SEEK•CAT button ⏮ or ⏭ to tune from low to high or high to low frequencies and to stop at the next broadcasting station.

**SCAN tuning:**

Press the SCAN button to stop at each broadcasting station for 5 seconds. SCAN will appear on the screen while the radio is scan tuning. Pressing the button again during this 5 second period will stop SCAN tuning and the radio will remain tuned to that station. If the SCAN button is not pressed within 5 seconds, SCAN tuning moves to the next station.

**1 to 6 Station memory operations:**

Six stations can be set for the AM band. Twelve stations can be set for the FM band (6 for FM1, 6 for FM2). Eighteen channels can be set for the satellite radio (6 for XM1, 6 for XM2, 6 for XM3).

1. Choose the radio band AM, FM1 or FM2 using the FM·AM select button, or choose the satellite band XM1, XM2 or XM3 using the XM button.
2. Tune to the desired station using manual, SEEK or SCAN tuning. Press and hold any of the desired station memory buttons (1 – 6) until the preset number is updated on the display and the sound is briefly muted.
3. The channel indicator will then come on and the sound will resume. Programming is now complete.
4. Other buttons can be set in the same manner.

If the battery cable is disconnected, or if the fuse opens, the radio memory will be canceled. In that case, reset the desired stations.

## Compact disc (CD) player operation

If the radio is already operating, it automatically turns off and the compact disc begins to play.

**CD·AUX button:**

With a CD loaded, press the CD·AUX button until the CD mode is displayed on the screen.

**CD/MP3 display mode:**

While listening to an MP3/WMA CD, certain text may be displayed on the screen if the CD has been encoded with text information. Depending on how the MP3/WMA CD is encoded, information such as Artist, Song and Folder will be displayed.

The track number and the total number of tracks in the current folder or on the current disc are displayed on the screen as well.

**SEEK/CAT (Reverse or Fast Forward) button:**

Press and hold the SEEK/CAT button ⏮ or ⏭ for 1.5 seconds while the compact disc is playing to reverse or fast forward the track being played. The compact disc plays at an increased speed while reversing or fast forwarding. When the button is released, the compact disc returns to normal play speed.

**SEEK/CAT button:**

Press the SEEK/CAT button ⏮ while a CD or MP3/WMA CD is playing to return to the beginning of the current track. Press the SEEK/CAT button ⏮ several times to skip backward several tracks.

Press the SEEK/CAT button ⏭ while a CD or MP3/WMA CD is playing to advance one track. Press the SEEK/CAT button ⏭ several times to skip forward several tracks. If the last track on a CD is skipped, the first track on the disc is played. If the last track in a folder of an MP3/WMA CD is skipped, the first track of the next folder is played.

**TUNE/SCROLL knob (MP3/WMA CD only):**

If an MP3/WMA CD with multiple folders is playing, turn the TUNE/SCROLL knob to change folders. Turn the knob to the left to skip back a folder. Turn the knob to the right to skip ahead a folder.

**RPT button:**

When the RPT button is pressed while a compact disc is playing, the play pattern can be changed as follows:

CD:

1 Track Repeat ⟷ OFF

CD with MP3 or WMA:

1 Folder Repeat → 1 Track Repeat → OFF

1 Track Repeat: the current track will be repeated.

1 Folder Repeat: the current folder will be repeated.

OFF: No repeat play pattern is applied. The indicator on the display will turn off.

The current play pattern of the CD is displayed on the screen unless no pattern is applied.

**RDM button:**

When the RDM button is pressed while a compact disc is playing, the play pattern can be changed as follows:

CD:

1 Disc Random ⟷ OFF

CD with MP3 or WMA:

1 Disc Random → 1 Folder Random → OFF

1 Disc Random: all tracks on the disc will be played randomly.

1 Folder Random: all tracks in the current folder will be played randomly.

OFF: No random play pattern is applied. The indicator on the display will turn off.

The current play pattern of the CD is displayed on the screen unless no pattern is applied.

**CD▪AUX button:**

The AUX IN jack is located on the CD player. The AUX IN audio input jack accepts any standard analog audio input such as from a portable cassette tape/CD player, MP3 player or a laptop computer.

Press the CD▪AUX button to play a compatible device plugged into the AUX IN jack. The CD▪AUX button is also used to switch the audio system to a source plugged into the USB input jack in the center console. When a device is plugged into the AUX IN jack while another device is plugged into the USB input jack, the CD▪AUX button is used to toggle between the two functions.

For more information about the USB input jack, see “USB interface (models without Navigation System)” in this section.

**EJECT button:**

When the ⏏ button is pressed with a compact disc loaded, the compact disc will eject and the last source will be played.

When the ⏏ button is pressed twice with a compact disc loaded, the compact disc will be ejected further for easier CD removal. If the disc is not removed within 20 seconds, the disc will reload.

## Additional features

For more information about the iPod® player available with this system, see “iPod® player operation without Navigation System” in this section.

For more information about the USB interface available with this system, see “USB interface (models without Navigation System)” in this section.

For more information about the Bluetooth® audio interface available with this system, see “Bluetooth® streaming audio without Navigation System” in this section.

For more information about the Pandora® audio feature available with this system, see “Pandora® audio” in this section.

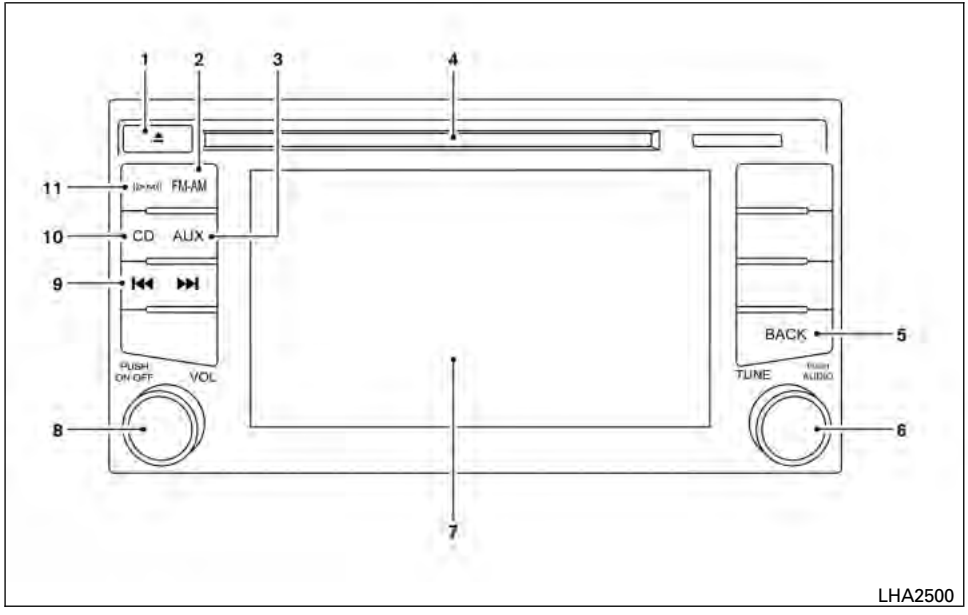


**Type B**

1. ⏏ CD eject button
2. FM-AM button
3. AUX button
4. CD insert slot
5. BACK button
6. TUNE knob / AUDIO button
7. Display screen
8. ON-OFF button / VOL (volume)
9. ⏮ Backward seek button and ⏭ Forward seek button

10. CD button
11. XM button*

*No satellite radio reception is available when the XM button is pressed to access satellite radio stations unless optional satellite receiver and antenna are installed and an SiriusXM Satellite Radio service subscription is active. Satellite radio is not available in Alaska, Hawaii and Guam.

## FM/AM/SAT RADIO WITH COMPACT DISC (CD) PLAYER (Type B) (if so equipped)

For all operation precautions, see “Audio operation precautions” in this section.

### Audio main operation

**VOL (volume) / ON-OFF button:**

Place the ignition switch in the ACC or ON position and press the ON-OFF button while the system is off to call up the mode (radio, CD, AUX, Bluetooth® audio USB or iPod®) that was playing immediately before the system was turned off.

To turn the system off, press the ON-OFF button.

Turn the VOL (volume) control knob to adjust the volume.

This vehicle may be equipped with Speed Sensitive Volume. When this feature is active, the audio volume changes as the driving speed changes.

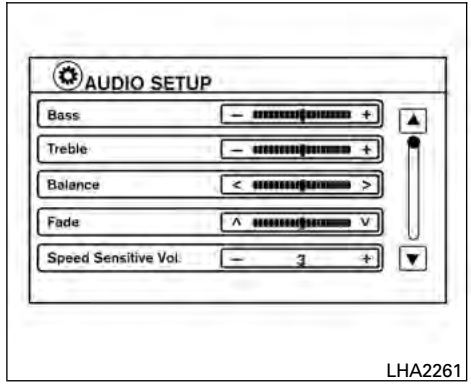

LHA2261

**Audio settings:**

1. Press the MENU button.
2. Select the “Settings” key.
3. Select the “Audio” key.

Use the touchscreen to adjust the following items to the desired setting:

**Bass, Treble, Balance and Fade:**
Controls the sound of the audio system. Balance adjusts the sound between the left and right speakers. Fade adjusts the sound between the front and rear speakers.

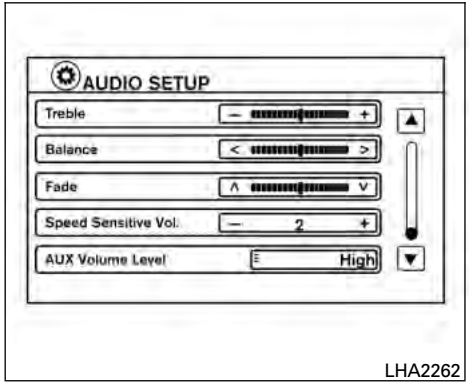


**Speed Sensitive Vol.:**
Controls the level to which the volume is adjusted as the vehicle's driving speed changes. Choose a setting or choose "0" to disable the feature entirely.

**AUX Volume Level:**
Controls the volume level of incoming sound when an auxiliary device is connected to the system. Available options are Low, Medium and High.

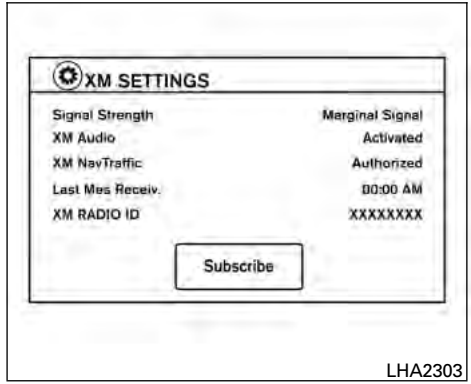


**XM settings:**

To view the XM settings:

1. Press the MENU button.
2. Select the "Settings" key.
3. Select the "XM" key.

The signal strength, activation status and other information are displayed on the screen.

## FM/AM/SAT radio operation

**FM·AM button:**

Press the FM·AM button to change the band as follows:

AM → FM1 → FM2 → AM

If another audio source is playing when the FM·AM button is pressed, the audio source playing will automatically be turned off and the last radio station played will begin playing.

The FM stereo indicator (ST) is shown on the screen during FM stereo reception. When the stereo broadcast signal is weak, the radio automatically changes from stereo to monaural reception.

**XM band select:**

Pressing the XM button will change the band as follows:

XM1* → XM2* → XM3* → XM1* (satellite, if so equipped)

When the XM button is pressed while the ignition switch is in the ACC or ON position, the radio will come on at the last station played.

The last station played will also come on when the VOL/ON-OFF control knob is pressed to turn the radio on.

*When the XM button is pressed, the satellite radio mode will be skipped unless an optional satellite receiver and antenna are installed and a SiriusXM Satellite Radio service subscription is active. Satellite radio is not available in Alaska, Hawaii and Guam.

If a compact disc is playing when the XM button is pressed, the compact disc will automatically be turned off and the last radio station played will come on.

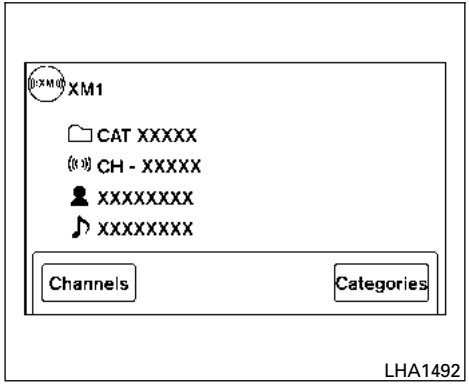

LHA1492

While the radio is in XM mode, the operation can be controlled through the touchscreen. Touch the “Channels” key to display a list of channels. Touch a channel displayed on the list to change to that channel. Touch the “Categories” key to display a list of categories. Touch a category displayed on the list to display options within that category.

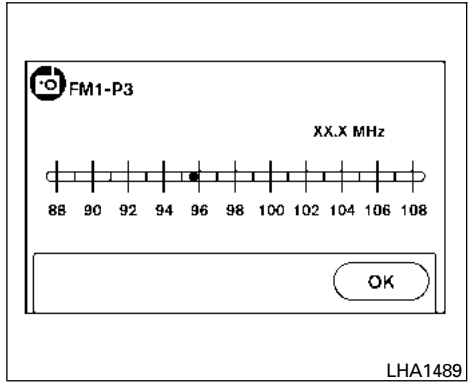

LHA1489

**Tuning with the touchscreen:**

When in AM or FM mode, the radio can be tuned using the touchscreen. To bring up the visual tuner, touch the “Tune” key on the lower right corner of the screen. A screen appears with a bar running from low frequencies on the left to high frequencies on the right. Touch the screen at the location of the frequency you wish to tune and the station will change to that frequency. To return to the regular radio display screen, touch the “OK” key.

**Tuning with the TUNE knob:**

The radio can also be manually tuned using the TUNE knob. When in FM or AM mode, turn the TUNE knob to the left for lower frequencies or to the right for higher frequencies. When in XM mode, turn the TUNE knob to change the channel.

**SEEK tuning:**

When in FM or AM mode, press the seek buttons ⏮ or ⏭ to tune from low to high or high to low frequencies and to stop at the next broadcasting station.

When in XM mode, press the seek buttons ⏮ or ⏭ to change the category.

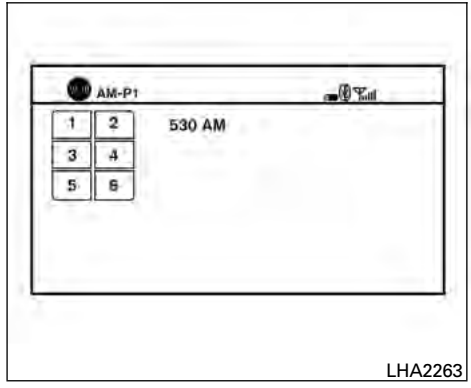


**1 to 6 Station memory operations:**

Twelve stations can be set for the FM band (6 for FM1, 6 for FM2) and six stations can be set for the AM band. Eighteen stations can be set for the XM band (6 for XM1, 6 for XM2, 6 for XM3).

1. Choose the radio band AM, FM1 or FM2 using the FM·AM select button or choose the radio band XM1, XM2 or XM3 using the XM button.
2. Tune to the desired station using manual or seek tuning. Press and hold any of the desired station memory buttons (1 – 6) until a beep sound is heard.
3. The channel indicator will then come on and the sound will resume. Programming is now complete.
4. Other buttons can be set in the same manner.

If the battery cable is disconnected or if the fuse opens, the radio memory will be canceled. In that case, reset the desired stations.

Presets can also be selected by touching the desired preset number on the screen.

## Compact disc (CD) player operation

If the radio is already operating, it automatically turns off and the compact disc begins to play.

**CD button:**

When the CD button is pressed with the system off and the compact disc loaded, the system will turn on and the compact disc will start to play.

When the CD button is pressed with a compact disc loaded and the radio playing, the radio will automatically be turned off and the compact disc will start to play.

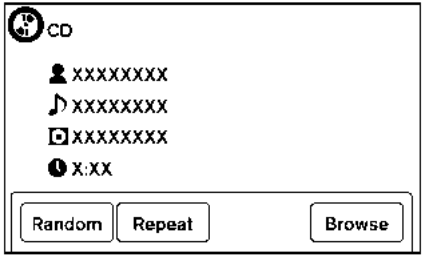


LHA1488

**CD/MP3 display mode**

While listening to a CD or an MP3/WMA CD, certain text may be displayed (when a CD encoded with text is being used). Depending on how the CD or MP3/WMA CD is encoded, the text is displayed listing the artist, album and song title.

There are other keys displayed on the screen when a CD is playing:

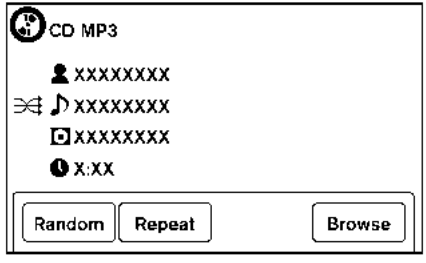


LHA1490

**Random:**

Touch the “Random” key to apply a random play pattern to the CD. When the random mode is active, the icon will be displayed to the left of the song title. If an MP3 CD is playing, touching “Random” alternates between randomly playing songs within the current folder and songs from the CD as a whole. The icon is displayed to the left of the song title or folder name to denote which pattern is applied. To cancel Random mode, touch the “Random” key until no icon is displayed.

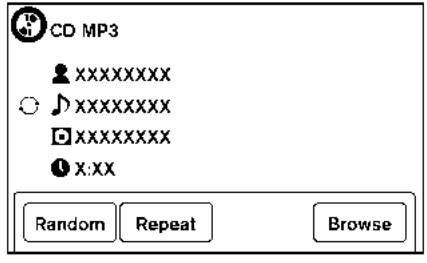


LHA1491

**Repeat:**

Touch the “Repeat” key to apply a repeat play pattern to the CD. When the repeat mode is active, the icon will be displayed to the left of the song title. If an MP3 CD is playing, touching “Repeat” alternates between repeating the current song and repeating the current folder. The icon is displayed to the left of the song title or folder name to denote which pattern is applied. To cancel Repeat mode, touch the “Repeat” key until no icon is displayed.

**Browse:**

Touch the “Browse” key to display the titles on the CD in list format. Touch the title of a song in the list to begin playing that song. If an MP3 CD is

playing, touching the “Browse” key will also list the folders on the disc. Follow the procedure for selecting a song with the touchscreen to choose a folder.

**SEEK (Reverse or Fast Forward) buttons:**

Press and hold the seek buttons ⏮ or ⏭ for 1.5 seconds while the compact disc is playing to reverse or fast forward the track being played. The compact disc plays at an increased speed while reversing or fast forwarding. When the button is released, the compact disc returns to normal play speed.

**SEEK buttons:**

Press the seek button ⏮ while a CD or MP3/WMA CD is playing to return to the beginning of the current track. Press the seek button ⏮ several times to skip backward several tracks.

Press the seek button ⏭ while a CD or MP3/WMA CD is playing to advance one track. Press the seek button ⏭ several times to skip forward several tracks. If the last track on a CD is skipped, the first track on the disc is played. If the last track in a folder of an MP3/WMA CD is skipped, the first track of the next folder is played.

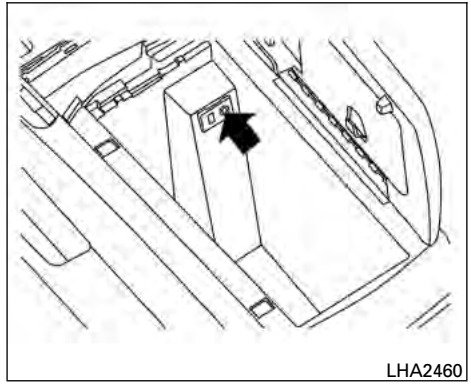
LHA2460

**AUX button:**

The AUX IN audio input jack is located in the center console and accepts any standard analog audio input such as from a portable cassette tape/CD player, MP3 player or a laptop computer.

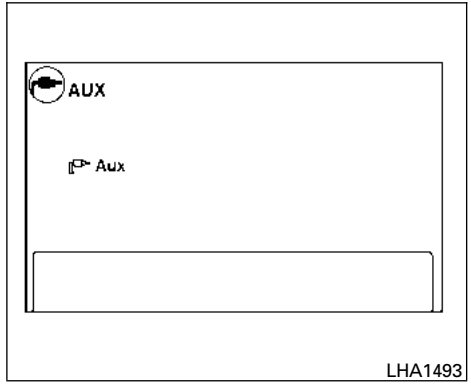

LHA1493

Press the AUX button to play a compatible device plugged into the AUX IN jack.

**EJECT button:**

When the ⏏ button is pressed with a compact disc loaded, the compact disc will eject and the last source will be played.

When the ⏏ button is pressed twice with a compact disc loaded, the compact disc will be ejected further for easier CD removal. If the disc is not removed within 10 seconds, the disc will reload.

## Additional features

For more information about the iPod® player available with this system, see “iPod® player operation with Navigation System” in this section.

For more information about the USB interface available with this system, see “USB interface (models with Navigation System)” in this section.

For more information about the Bluetooth® audio interface available with this system, see “Bluetooth® streaming audio with Navigation System” in this section.

For more information about the Pandora® audio feature available with this system, see “Pandora® audio” in this section.

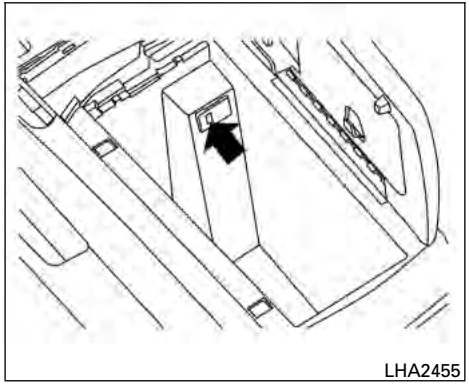


## USB INTERFACE (models without Navigation System) (if so equipped)

## Connecting a device to the USB input jack

The USB input jack is located inside the center console. Insert the USB device into the jack.

When a compatible storage device is plugged into the jack, compatible audio files on the storage device can be played through the vehicle’s audio system.

## Audio file operation

**CD•AUX button:**

Place the ignition switch in the ON or ACC position and press the CD•AUX button to switch to the USB input mode. If a CD is playing or another audio source is plugged in through the AUX IN jack on the radio, the CD•AUX button toggles between the three sources.

**Play information**

Information about the audio files being played can be displayed on the display screen of the vehicle’s audio system. Depending on how the audio files are encoded, information such as Folder, Song and Artist will be displayed.

The track number and number of total tracks in the folder are displayed on the screen as well.

**SEEK/CAT (Reverse or Fast Forward) buttons:**

Press and hold the SEEK/CAT buttons ⏮ or ⏭ for 1.5 seconds while an audio file on the USB device is playing to reverse or fast forward the track being played. The track plays at an increased speed while reversing or fast forwarding. When the button is released, the audio file returns to normal play speed.

**SEEK/CAT buttons:**

Press the SEEK/CAT button ⏮ while an audio file on the USB device is playing to return to the beginning of the current track. Press the SEEK/CAT button ⏮ several times to skip backward several tracks.

Press the SEEK/CAT button ⏭ while an audio file on the USB device is playing to advance one track. Press the SEEK/CAT button ⏭ several times to skip forward several tracks. If the last track in a folder on the USB device is skipped, the first track of the next folder is played.

**RDM button:**

When the RDM button is pressed while an audio file on the USB device is playing, the play pattern can be changed as follows:

All Random → 1 Folder Random → OFF

All Random: all tracks on the USB device will be played randomly.

1 Folder Random: all tracks in the current folder will be played randomly.

OFF: No random play pattern is applied. The indicator on the display will turn off.

The current play pattern of the USB device is displayed on the screen unless no pattern is applied.

**RPT button:**

When the RPT button is pressed while an audio file on the USB device is playing, the play pattern can be changed as follows:

1 Folder Repeat → 1 Track Repeat → OFF

1 Track Repeat: the current track will be repeated.

1 Folder Repeat: the current folder will be repeated.

OFF: No repeat play pattern is applied. The indicator on the display will turn off.

The current play pattern of the USB device is displayed on the screen unless no pattern is applied.

**TUNE/SCROLL knob:**

If there are multiple folders with audio files on the USB device, turn the TUNE/SCROLL knob to change folders. Turn the knob to the left to skip back a folder. Turn the knob to the right to skip ahead a folder. If there is only one folder of audio files on the USB device, turning the TUNE/SCROLL knob in either direction will return to the first track on the USB device.

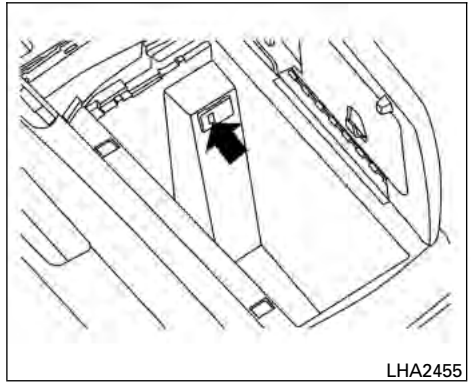


## USB INTERFACE (models with Navigation System)

### Connecting a device to the USB input jack

The USB input jack is located inside the center console. Insert the USB device into the jack.

When a compatible storage device is plugged into the jack, compatible audio files on the storage device can be played through the vehicle's audio system.

## Audio file operation

**AUX button:**

Place the ignition switch in the ON or ACC position and press the AUX button to switch to the USB input mode. If another audio source is playing and a USB memory device is inserted, press the AUX button repeatedly until the center display changes to the USB memory mode.

If the system has been turned off while the USB memory was playing, push the ON-OFF/VOL control knob to restart the USB memory.

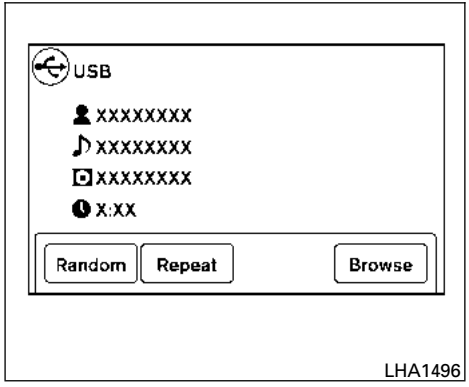


**Play information:**

Information about the audio files being played is shown on the display screen of the vehicle's audio system. Touch "Browse" to display the list of folders and files on the USB device. Touch the name of a song on the screen to begin playing that song.

**Seeking buttons:**

Press the button while an audio file on the USB device is playing to return to the beginning of the current track. Press the button several times to skip backward several tracks.

Press the button while an audio file on the USB device is playing to advance one track. Press the button several times to skip forward several tracks. If the last track in a folder on the USB device is skipped, the first track of the next folder is played.

**Random and repeat play mode:**

While files on a USB device are playing, the play pattern can be altered so that songs are repeated or played randomly.

**Random:**
Touch the "Random" key to apply a random play pattern to the USB device. When the random mode is active, the icon is displayed to the left of the song title or album name to denote which random pattern is applied. To cancel Random mode, touch the "Random" key until no icon is displayed.

**Repeat:**
Touch the "Repeat" key to apply a repeat play pattern to the USB device. When the repeat mode is active, the icon is displayed to the left of the song title or album name to denote which repeat pattern is applied. To cancel Repeat mode, touch the "Repeat" key until no icon is displayed.

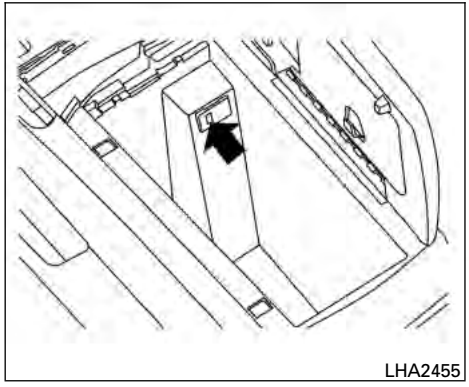


## iPod®* PLAYER OPERATION WITHOUT NAVIGATION SYSTEM (if so equipped)

### Connecting iPod®

To connect an iPod® to the vehicle so that the iPod® can be controlled with the audio system controls and display screen, use the USB jack located in the center console. Connect the iPod®-specific end of the cable to the iPod® and the USB end of the cable to the USB jack on the vehicle. If your iPod® supports charging via a USB connection, its battery will be charged while connected to the vehicle with the ignition switch in the ACC or ON position.

While connected to the vehicle, the iPod® can only be operated by the vehicle audio controls.

To disconnect the iPod® from the vehicle, remove the USB end of the cable from the USB jack on the vehicle, then remove the cable from the iPod®.

* iPod® is a trademark of Apple Inc., registered in the U.S. and other countries.

### Compatibility

The following models are compatible:

- iPod® 5th Generation (firmware version 1.3 or later)
- iPod® Classic (80GB) (firmware version 1.1.2PC or later)
- iPod® Classic (120GB) (firmware version 2.0.1PC or later)
- iPod® Nano - 1st generation (firmware version 1.3.1 or later)
- iPod® Nano - 2nd generation (firmware version 1.1.3 or later)
- iPod® Nano - 3rd generation (firmware version 1.1.3PC or later)
- iPod® Nano - 4th generation (firmware version 1.0PC or later)
- iPod® Nano - 5th generation (8GB) (firmware version 1.0.2PC or later)
- iPod® Nano - 5th generation (16GB) (firmware version 1.0.1PC or later)
- iPod® Nano - 6th generation (8GB) (firmware version 1.2PC or later)
- iPod® Nano - 6th generation (8GB) (firmware version 1.1PC or later)
- iPod® Touch - 1st generation (firmware version 2.2.1 or later)
- iPod® Touch - 2nd generation (firmware version 2.2.1 or later)
- iPod® Touch - 3rd generation (firmware version 3.1.3 or later)
- iPod® Touch - 4th generation (firmware version 4.3.5 or later)
- iPhone® 3G (firmware version 4.1 or later)
- iPhone® 3GS (firmware version 4.3 or later)
- iPhone® 4 (firmware version 5.0 or later)
- iPhone® 4S (firmware version 5.1 or later)
- iPad® (firmware version 4.3.2 or later)
- iPad® 2 (firmware version 4.3.3 or later)

Make sure that your iPod® firmware is updated to the version indicated above.

## Audio main operation:

Place the ignition switch to the ACC or ON position. Then, press the CD·AUX or iPod® MENU button repeatedly to switch to the iPod® mode.

If the audio system is turned off while the iPod® is playing, the iPod® plays when the audio system is turned back on.

If the audio system is off, pressing the CD·AUX or iPod® MENU button turns the audio system on and plays the iPod®.

If the audio system is on, the audio system automatically begins playing tracks from the iPod® when it is plugged into the jack.

**iPod® MENU button:**

Press the iPod® MENU button while the iPod® is connected to show the iPod® operation menu on the audio display. Scroll through the menu list using the TUNE·SCROLL control dial. Press ENTER to select a menu item. Items in the iPod® menu appear on the display in the following order:

- Now playing
- Playlists
- Artists
- Albums
- Songs
- Podcasts
- Genres
- Composers
- Audiobooks
- Shuffle songs

For more information about each item, see the iPod® Owner's Manual.

**SEEK/CAT buttons:**

Press the SEEK/CAT buttons ⏮ or ⏭ to skip backward or forward one track.

Press and hold the SEEK/CAT buttons ⏮ or ⏭ for 1.5 seconds while a track is playing to reverse or fast forward the track being played. The track plays at an increased speed while reversing or fast forwarding. When the button is released, the track returns to normal play speed.

**REPEAT (RPT):**

When the RPT button is pressed while a track is being played, the play pattern can be changed as follows:

Repeat Off → 1 Track Repeat → All Repeat → Repeat Off

1 Track Repeat: the current track will be repeated.

All Repeat: all songs in the current list are repeated.

Repeat Off: no repeat play pattern is applied.

**RANDOM (RDM):**

When the RDM button is pressed while a track is being played, the play pattern can be changed as follows:

Shuffle Off → Track Shuffle → Album Shuffle → Shuffle Off

Track Shuffle: the tracks in the current list will be played randomly.

Album Shuffle: the albums in the current list will be played randomly.

Shuffle Off: no random play pattern is applied.

**BACK button:**

When the BACK button is pressed, it returns to the previous menu.

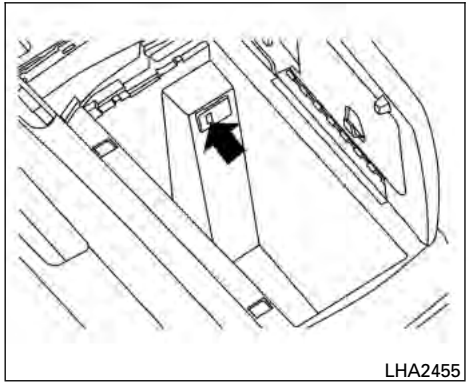


## iPod®* PLAYER OPERATION WITH NAVIGATION SYSTEM (if so equipped)

### Connecting iPod®

To connect an iPod® to the vehicle so that the iPod® can be controlled with the audio system controls and display screen, use the USB jack located in the center console. Connect the iPod®-specific end of the cable to the iPod® and the USB end of the cable to the USB jack on the vehicle. If your iPod® supports charging via a USB connection, its battery will be charged while connected to the vehicle with the ignition switch in the ACC or ON position.

While connected to the vehicle, the iPod® can only be operated by the vehicle audio controls.

To disconnect the iPod® from the vehicle, remove the USB end of the cable from the USB jack on the vehicle, then remove the cable from the iPod®.

* iPod® is a trademark of Apple Inc., registered in the U.S. and other countries.

### Compatibility

The following models are compatible:

- iPod® 5th Generation (firmware version 1.2.3 or later)
- iPod® Classic (firmware version 1.1.1 or later)
- iPod® Touch (firmware version 2.0.0 or later)*
- iPod® Nano - 1st generation (firmware version 1.3.1 or later)
- iPod® Nano - 2nd generation (firmware version 1.1.3 or later)
- iPod® Nano - 3rd generation (firmware version 1.1.3 or later)
- iPod® Nano - 4th generation (firmware version 1.0.4 or later)
- iPod® Nano - 5th generation (firmware version 1.0.1 or later)

* Some features of this iPod® may not be fully functional.

Make sure that your iPod® firmware is updated to the version indicated above.

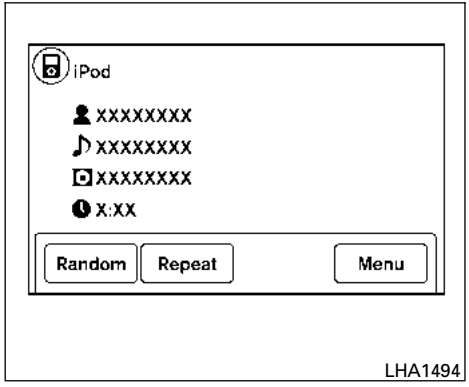

LHA1494

## Audio main operation

Place the ignition switch in the ACC or ON position. Press the AUX button repeatedly to switch to the iPod® mode.

If the system has been turned off while the iPod® was playing, pressing the VOL/ON·OFF control knob will start the iPod®.

**AUX button:**

When the AUX button is pressed with the system off and the iPod® connected, the system will turn on. If another audio source is playing and the iPod® is connected, press the AUX button repeatedly until the center display changes to the iPod® mode.

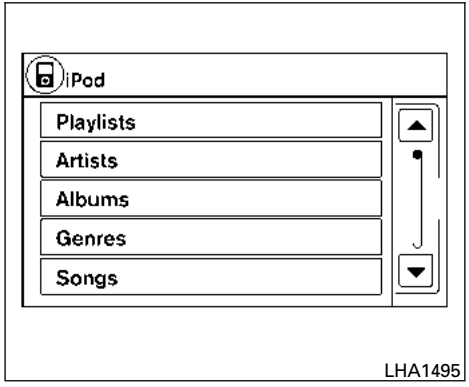

LHA1495

**Interface:**

The interface for iPod® operation shown on the vehicle's audio system display screen is similar to the iPod® interface. Use the touchscreen, BACK button or the scrolling knob to navigate the menus on the screen.

When the iPod® is playing, touch the "Menu" key to bring up the iPod® interface.

Depending on the iPod® model, the following items may be available on the menu list screen. For further information about each item, see the iPod® Owner's Manual.

- Playlists
- Artists
- Albums
- Genres
- Songs
- Composers
- Audiobooks
- Podcasts

**Random and repeat play mode:**

While the iPod® is playing, the play pattern can be altered so that songs are repeated or played randomly.

**Random:**

Touch the "Random" key to apply a random play pattern to the iPod®. When the random mode is active, the icon is displayed to the left of the song title or album name to denote which random pattern is applied. To cancel Random mode, touch the "Random" key until no icon is displayed.

**Repeat:**
Touch the “Repeat” key to apply a repeat play pattern to the iPod®. When the repeat mode is active, the icon is displayed to the left of the song title or album name to denote which repeat pattern is applied. To cancel Repeat mode, touch the “Repeat” key until no icon is displayed.

**Seek buttons:**

Press the seek button or to skip backward or forward one track.

Press and hold the seek button or for 1.5 seconds while a track is playing to reverse or fast forward the track being played. The track plays at an increased speed while reversing or fast forwarding. When the button is released, the track returns to normal play speed.

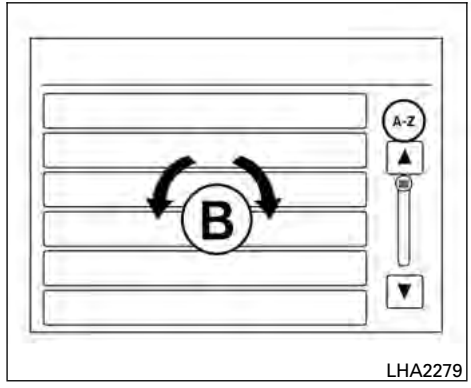

LHA2279

**Scrolling menus:**

While navigating long lists of artists, albums or songs in the music menu, it is possible to scroll the list by the first character in the name. To activate character indexing, touch and hold the “A-Z” key in the upper right corner of the screen. Turn the TUNE knob to choose the number or letter to jump to in the list and then press the ENTER button.

If no character is selected after two seconds, the display returns to normal.

## BLUETOOTH® STREAMING AUDIO WITHOUT NAVIGATION SYSTEM (if so equipped)

If you have a compatible Bluetooth® audio device that is capable of playing audio files, the device can be connected to the vehicle’s audio system so that the audio files on the device play through the vehicle’s speakers.

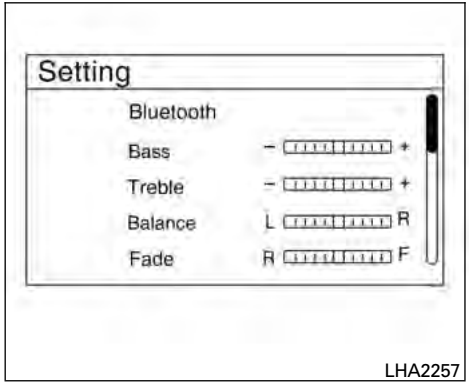

LHA2257

## Connecting Bluetooth® audio

To connect your Bluetooth® audio device to the vehicle, follow the procedure below:

1. Press the SETTING button.
2. Select the “Bluetooth” key.

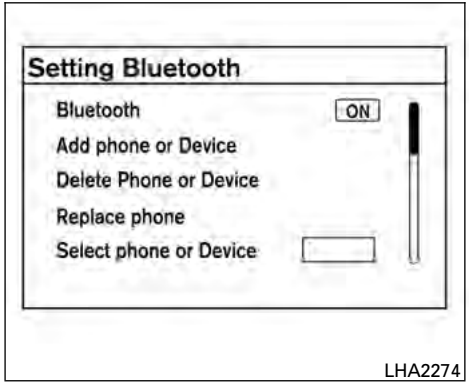

LHA2274

3. Select the “Add Telephone or Device” key. This same screen can be accessed to remove, replace or select a different Bluetooth® device.
4. The system acknowledges the command and asks you to initiate connecting from the phone handset. The connecting procedure of the cellular phone varies according to each cellular phone model. See the cellular phone Owner’s Manual for details. You can also visit www.nissanusa.com/bluetooth for instructions on connecting NISSAN recommended cellular phones.

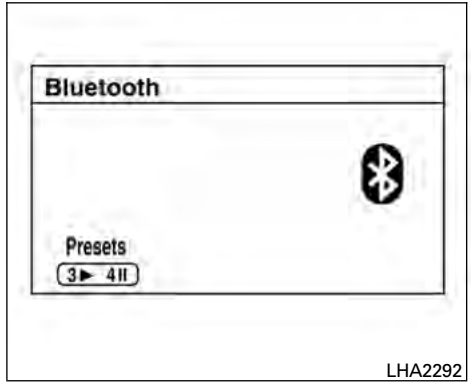

LHA2292

## Audio main operation

To switch to the Bluetooth® audio mode, press the CD▪AUX button repeatedly until the Bluetooth® audio mode is displayed on the screen.

The controls for the Bluetooth® audio are displayed on the screen. Use the Preset 3 button for play and the Preset 4 button for pause.

## BLUETOOTH® STREAMING AUDIO WITH NAVIGATION SYSTEM (if so equipped)

If you have a compatible Bluetooth® audio device that is capable of playing audio files, the device can be connected to the vehicle's audio system so that the audio files on the device play through the vehicle's speakers.

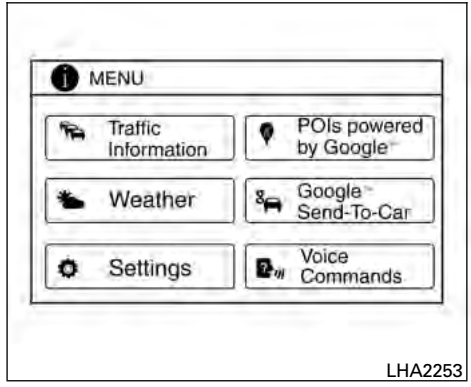

LHA2253

### Connecting Bluetooth® audio

To connect your Bluetooth® audio device to the vehicle, follow the procedure below:

1. Press the MENU button.
2. Select the "Settings" key.

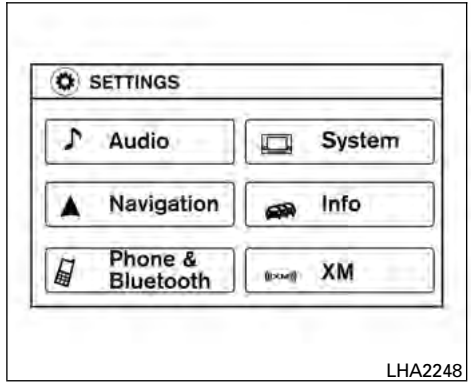

LHA2248

3. Select the "Phone & Bluetooth" key.

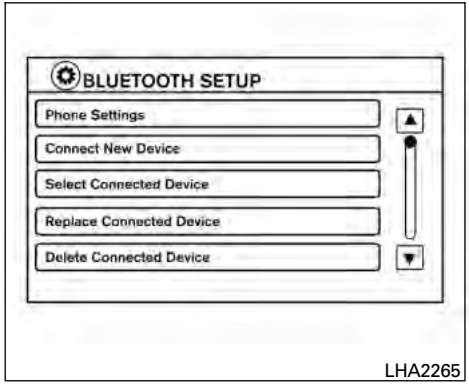


4. Select the “Connect New Device” key.
5. The system acknowledges the command and asks you to initiate connecting from the phone handset. The connecting procedure of the cellular phone varies according to each cellular phone model. See the cellular phone Owner’s Manual for details. You can also visit www.nissanusa.com/bluetooth for instructions on connecting NISSAN recommended cellular phones.

## Audio main operation

To switch to the Bluetooth® audio mode, press the AUX button repeatedly until the Bluetooth® audio mode is displayed on the screen.

The controls for the Bluetooth® audio are displayed on the screen.

## PANDORA® AUDIO (United States only) (if so equipped)

The vehicle’s audio system is capable of playing audio streaming through a compatible, USB-connected audio device using the Pandora® music service.

## Connecting a device for use with Pandora® audio

Devices capable of streaming Pandora® audio can be connected to the vehicle’s audio system via the USB input jack. The USB input jack is located on the center console beneath the heater and air conditioner controls. Once connected, the Pandora® controls will be displayed on the control panel display screen.

## Compatibility

The following iPhone® models are compatible with the system:

- iPhone® 3GS
- iPhone® 4
- iPhone® 4S

The latest Pandora® application should be installed on the phone.

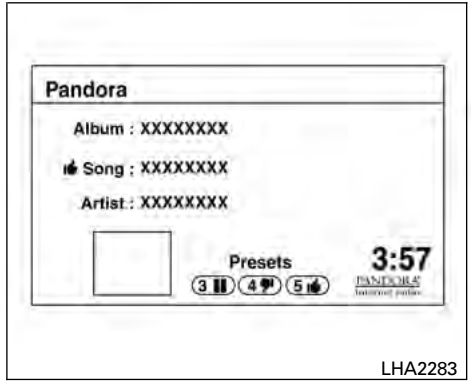


**Models without Navigation System**

## Audio main operation

**Models without Navigation System:**

To switch to the Pandora® audio mode, press the CD-AUX button repeatedly until the Pandora® audio mode is displayed on the screen.

The controls for the Pandora® audio are displayed on the screen. Press the audio preset 3 button to pause or play the music.

Press the audio preset 5 button to select “ 👍 ” (thumbs up). Press the audio preset 4 button to select “ 👎 ” (thumbs down).

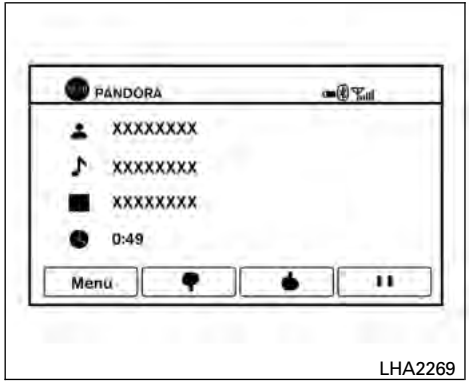

LHA2269

**Models with Navigation System:**

**NOTE:**

**There is a limit of six skips per station per hour. If a “ ” (thumbs down) is given after the skip limit has been reached, the current track will continue to play but the feedback will be saved.**

**Models with Navigation System:**

To switch to the Pandora® audio mode, press the AUX button repeatedly until the Pandora® audio mode is displayed on the screen.

The controls for the Pandora® audio are displayed on the screen. Touch the keys on the screen to play or pause the audio. Touch the key to select “thumbs up” or the key to select “thumbs down”.

**NOTE:**

**There is a limit of six skips per station per hour. If a “ ” (thumbs down) is given after the skip limit has been reached, the current track will continue to play but the feedback will be saved.**

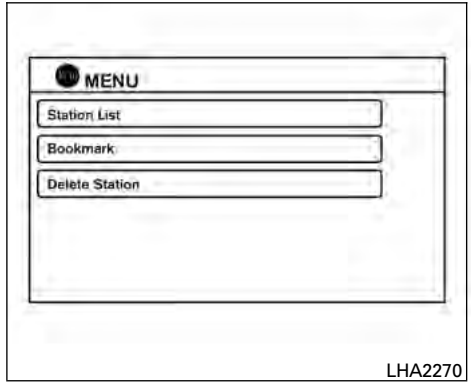

LHA2270

## Pandora® audio settings (models with Navigation System only)

To adjust the Pandora® audio settings, select the “Menu” key.

- Station List
  Select to display a list of available Pandora® stations.
- Bookmark
  Select to bookmark the current station.
- Delete Station
  Select to remove the current station.

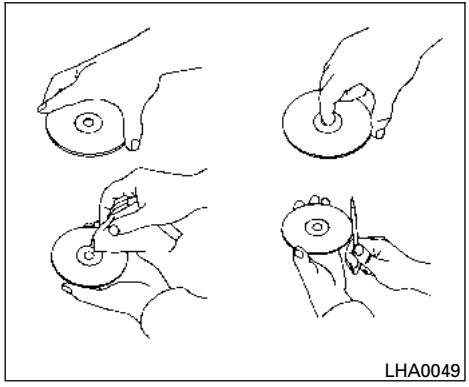


## CD CARE AND CLEANING

- Handle a CD by its edges. Do not bend the disc. Never touch the surface of the disc.
- Always place the discs in the storage case when they are not being used.
- To clean a disc, wipe the surface from the center to the outer edge using a clean, soft cloth. Do not wipe the disc using a circular motion.
- Do not use a conventional record cleaner or alcohol intended for industrial use.
- A new disc may be rough on the inner and outer edges. Remove the rough edges by rubbing the inner and outer edges with the side of a pen or pencil as illustrated.

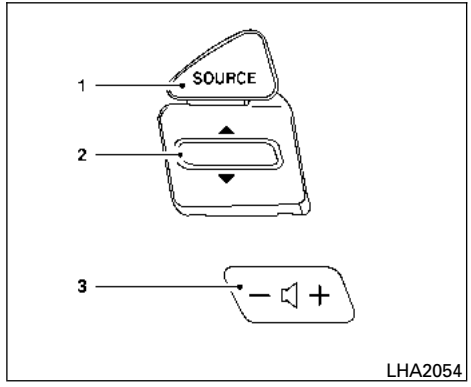


1. Source select and power on switch
2. Menu control switch/ENTER button
3. Volume control switch

## STEERING WHEEL SWITCH FOR AUDIO CONTROL (if so equipped)

### POWER on switch

With the ignition switch in the ACC or ON position, push the SOURCE switch to turn the audio system on.

## SOURCE select switch

Push the source select switch to change the mode in the following sequence:

AM → FM1 → FM2 → XM1 (satellite radio, if so equipped) → XM2 (satellite radio, if so equipped) → XM3 (satellite radio, if so equipped) → CD* → USB/iPod®* (if so equipped) → Bluetooth® Audio* → AUX* → AM.

* These modes are only available when compatible media storage is inserted into the device or connected to the system.

## Volume control switch

Push the volume control switch to increase or decrease the volume.

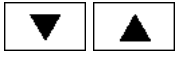

## Tuning

While the display is showing a map or audio screen, tilt the Menu Control switch upward or downward to select a station, track, CD or folder. For most audio sources, tilting the switch up/down for more than 1.5 seconds provides a different function than a tilting up/down for less than 1.5 seconds.

**AM and FM:**

- Tilt up/down for less than 1.5 seconds to increase or decrease the preset station.
- Tilt up/down for more than 1.5 seconds to seek up or down to the next station.

**XM (if so equipped):**

- Tilt up/down for less than 1.5 seconds to increase or decrease the preset station.
- Tilt up/down for more than 1.5 seconds to go to the next or previous category.

**iPod® (if so equipped):**

- Tilt up/down for less than 1.5 seconds to increase or decrease the track number.

**CD:**

- Tilt up/down for less than 1.5 seconds to increase or decrease the track number.
- Tilt up/down for more than 1.5 seconds to increase or decrease the folder number (if playing compressed audio files).

**USB (if so equipped):**

- Tilt up/down for less than 1.5 seconds to increase or decrease the track number.
- Tilt up/down for more than 1.5 seconds to increase or decrease the folder number.

**Bluetooth® Audio (if so equipped):**

- Tilt up/down for less than 1.5 seconds to skip ahead or back to the next song.
- Tilt up/down for more than 1.5 seconds to reverse or fast forward the current song.

**Pandora® Audio (if so equipped):**

- Tilt up for less than 1.5 seconds to input “thumbs up” for the current song.
- Tilt down for less than 1.5 seconds to input “thumbs down” for the current song.
- Tilt up for more than 1.5 seconds to skip to the next song (if the maximum of six skips per station per hour has not been exceeded).

## ANTENNA

The antenna cannot be shortened, but can be removed. When you need to remove the antenna, turn the antenna rod counterclockwise.

To install the antenna rod, turn the antenna clockwise. Tighten the antenna rod to specification using a suitable tool such as an open-end wrench. The antenna rod tightening specification is 3.4 – 3.6 N·m (30 – 32 in-lb). Do not use pliers to tighten the antenna as they can leave marks on the antenna surface. The antenna rod cannot be hand tightened to the proper specification.

**⚠ CAUTION**

**Always properly tighten the antenna rod during installation or the antenna rod may break during vehicle operation.**

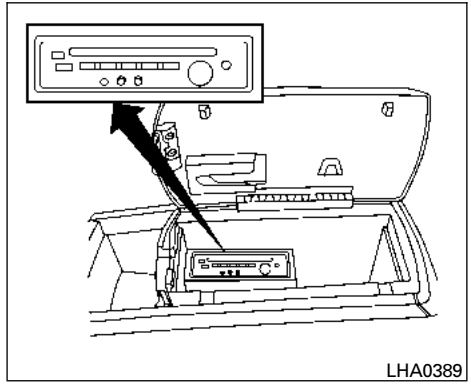


**⚠ WARNING**

- **The Mobile Entertainment System is designed for rear seat passenger viewing only.**
- **The driver must not attempt to operate the Mobile Entertainment System while the vehicle is in motion so that full attention may be given to vehicle operation.**

**⚠ CAUTION**

- **The glass screen on the liquid crystal display may break if hit with a hard or sharp object. If the glass breaks, do not touch the liquid crystalline material, which contains a small amount of mercury. In case of contact with skin, wash immediately with soap and water.**
- **Use a damp, soft cloth when cleaning the Mobile Entertainment System components. Do not use solvents or cleaning solutions.**

Do not attempt to use the system in extreme temperature conditions [below -4°F (-20°C) or above 158°F (70°C)].

To avoid discharging the vehicle battery, do not operate the system more than 15 minutes without starting the engine.

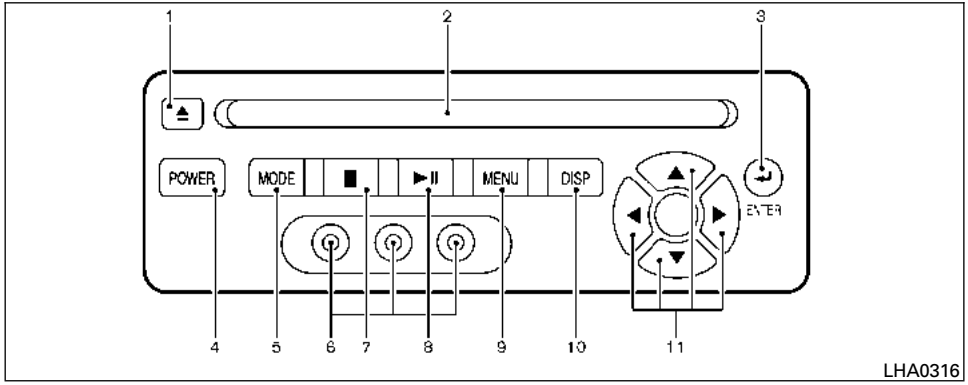


1. EJECT button
2. DVD slot
3. ENTER button
4. POWER on/off button
5. MODE button
6. Input jacks
7. STOP button
8. PLAY/PAUSE button
9. MENU button
10. DISPLAY button
11. NAVIGATION keys

## DIGITAL VIDEO DISC (DVD) PLAYER CONTROLS

Refer to “Playing a digital video disc (DVD)” in this section for the function of each button.

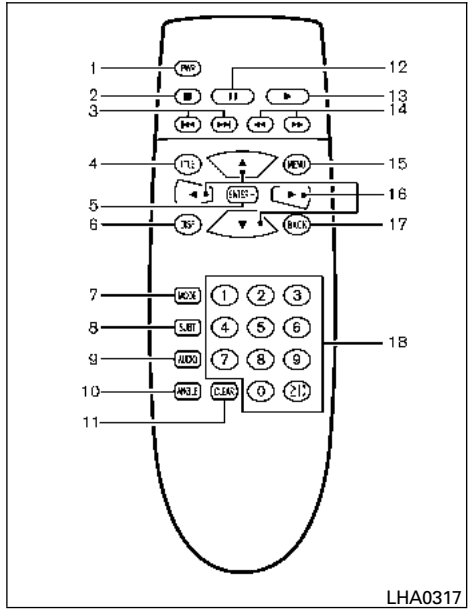


1. POWER button
2. STOP button
3. NEXT TRACK/CHAPTER and PREVIOUS TRACK/CHAPTER button
4. TITLE button
5. ENTER button

6. DISPLAY button
7. MODE button
8. SUBTITLE button
9. AUDIO button
10. ANGLE button
11. CLEAR button
12. PAUSE button
13. PLAY button
14. FAST FORWARD/FAST RE VERSE button
15. MENU button
16. NAVIGATION keys
17. BACK button
18. Numeric keypad

## REMOTE CONTROL

Refer to “Playing a digital video disc (DVD)” in this section for the function of each button.

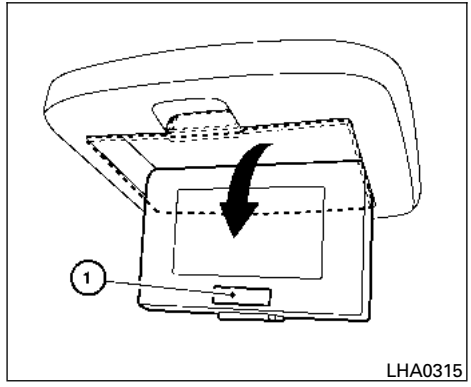


## FLIP-DOWN SCREEN

The flip-down screen has a wireless remote control receiver ① located at the bottom of the screen.

**⚠ CAUTION**

- **The glass screen on the liquid crystal display may break if hit with a hard or sharp object. If the glass screen breaks, do not touch it. Doing so could result in an injury.**
- **The screen rotates down to view and up into the housing to store when not in use. Ensure that the screen is latched securely into the housing when stored.**

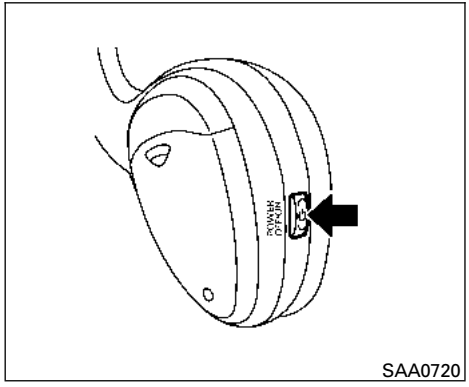

SAA0720

## Headphones

**Power ON/OFF:**

Press the power button to turn the headphones on or off.

**Volume control:**

Turn the volume control knob to adjust the volume.

The headphones will automatically be turned off in 30 seconds if there is no sound during that period. To prevent the battery from being discharged, keep the power supply turned off when not in use.

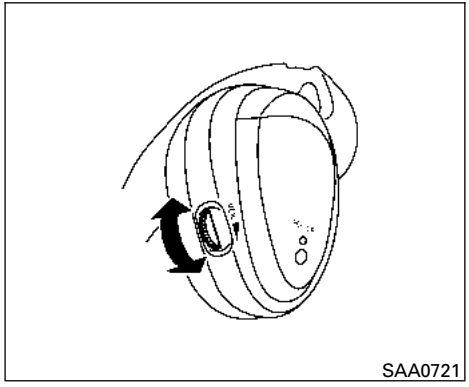
SAA0721

**NOTE:**

**For optimum infrared headphone performance, increase the volume on the rear seat controller to the maximum level and adjust the infrared headphone volume using the volume control on the headphones. Using a lower volume setting on the rear seat controller can cause static noise in the infrared headphones.**

## PLAYING A DIGITAL VIDEO DISC (DVD)

**⚠ CAUTION**

- **Only operate the DVD while the vehicle engine is running. Operating the DVD for extended periods of time with the engine OFF can discharge the vehicle battery.**
- **Do not allow the system to get wet. Excessive moisture such as spilled liquids may cause the system to malfunction.**

The driver must not attempt to wear the headphones while the vehicle is in motion so that full attention may be given to vehicle operation.

While playing video CD media, this DVD player does not guarantee complete functionality of all video CD formats.

With the DVD player, you can hear DVD videos, video CDs and CDs using headphones. Passengers in the rear seat can enjoy the sound independently of the front seat.

Press the AUX button located on the front controls to hear the sound of the DVD play through the speakers.

It is possible to operate the DVD player by remote control.

Headphones are a wireless type and no cables are necessary. You can use them in almost all the ranges in the rear seat. (It is not possible to use the headphones in the front seat.)

**POWER on/off button:**

With the ignition switch placed in the ACC or ON position, press the POWER button to turn the DVD player on or off.

Insert the DVD into the slot with the label side facing up. The DVD will be guided automatically into the slot.

If the DVD player is off and a DVD is inserted, the DVD player will automatically turn on.

**⚠ CAUTION**

**Do not force the compact disc into the slot. This could damage the player.**

**MODE select button:**

Press the MODE button to select Audio/Video source between DVD and AUX input (input jacks on the faceplate, Red = right channel audio input, White = left channel audio input, and Yellow = Video input).

The display will show the "AUX" in the upper left corner of the display for 4 seconds once the Mode is changed to AUX.

To use the input jacks, refer to "Auxiliary input jacks" in this section.

**▶II or ▶ PLAY:**

When the PLAY/PAUSE button on the player or the PLAY button on the remote control is pressed, the player will play.

In play mode, the display will briefly show ▶ on the upper left corner of the display.

**▶▶ ◀◀ FF (Fast Forward), REW (Remote control only):**

Press the FAST FORWARD/FAST REVERSE buttons to carry out the fast forward or fast reverse presentation at 5 times normal play speed.

Press the FAST FORWARD/FAST REVERSE buttons again or PLAY button to resume the normal play speed.

**|◀◀ ▶▶| NEXT CHAPTER/PREVIOUS CHAPTER (Remote control only):**

When the ▶▶| (NEXT CHAPTER) button is pressed while the DVD is playing, the program next to the present one will start to play from its beginning. Press several times to skip through programs. The DVD will advance the number of times the button is pressed. When the |◀◀ (PREVIOUS CHAPTER) button is pressed, the program being played returns to its beginning. Press several times to skip back through programs. The DVD will go back the number of times the button is pressed.

**▶II or II PAUSE:**

When the PLAY/PAUSE button on the player or the PAUSE button on the remote control is pressed, the player will pause playing of the media. In pause mode, the player will show II on the upper left corner of the display until the player is changed to another mode.

## STOP:

Press the STOP button once to stop playing the media. The display will show ■ in the upper left corner of the display for 4 seconds, and the last disc position will be stored. When the PLAY button is pressed again, it will resume at the stored disc track and time position.

If the STOP button is pressed again when the player is already in Stop mode, it will reinitialize the pointer to the beginning of the disc. In effect, it will ignore the last stored disc position and upon receipt of the next play message, will begin at the Title Menu or at “the beginning of the disc”.

## EJECT:

When the EJECT button is pressed with the DVD loaded, it will be ejected.

The display will show the EJECT symbol ⏏ in the upper left corner of the display for 4 seconds once the EJECT button is pressed.

If the DVD is not loaded, the display will show “NO DISC”.

If the DVD comes out and is not removed within 25 seconds, it will be pulled back into the slot to protect it.

## DISPLAY:

If the DISPLAY control is pressed for less than 2 seconds, the display menu will appear on the screen.

- The display menu will remain on the screen for 10 seconds if no subsequent control activations occur.
- Use the NAVIGATION KEYS to navigate within the display menu and use ENTER to select the item.
- Holding the DISPLAY control on the faceplate for longer than approximately 2 seconds while in the display menu will reset the display characteristics to their nominal values. (Faceplate feature only)

If the DISPLAY control button on the faceplate is pressed for more than 2 seconds, the media track/time information will be displayed along the bottom of the display. Pressing the DISPLAY control for more than 2 seconds will remove the media track/time information from the display. (Faceplate feature only)

## NAVIGATION KEYS:

If media is in PLAY mode, activation of the NAVIGATION KEYS (Up, Down, Left, and Right) will perform the following functions: next chapter/track, previous chapter/track, fast reverse and fast forward, and the display will show ⏭ , ⏮ , ◀◀ and ▶▶ respectively in the upper left corner of the display for 4 seconds. (Faceplate feature only)

If media is in PAUSE mode, activation of the NAVIGATION KEYS (Up, Down and Right) will perform the following functions: next chapter/track, previous chapter/track and slow forward, and the display will show ⏭ , ⏮ and a forward arrow symbol respectively in the upper left corner of the display for 4 seconds. (Faceplate feature only)

If media is in activated MENU mode, the NAVIGATION KEYS will be used to navigate Up, Down, Left, and Right within the menu.

If display control menu is on, the NAVIGATION KEYS will be used to navigate Up, Down, Left, and Right within the menu.

## ENTER:

In MENU mode, press the ENTER button to select MENU items.

In the display menu, press the ENTER button to select items for modification, as per the on-screen instructions.

**MENU:**

If the media is in PLAY mode and the MENU button is pressed, the DVD menu will appear on the screen. Use the Navigation Keys to navigate within the menu and use ENTER to select the item.

Press the MENU button again to return to PLAY mode.

**TITLE (Remote control only):**

Press the TITLE button to return the DVD media to the "title" of the DVD.

Press the TITLE button again to return to the previous stop point and play.

**BACK (Remote control only):**

Press the BACK button to exit the current active menu and return to the previous menu.

**SUBTITLE (Remote control only):**

Press the SUBTITLE button to call up subtitle selection menu.

Repeatedly press the SUBTITLE button to cycle through each available subtitle.

**AUDIO (Remote control only):**

Press the AUDIO button to call up the audio menu.

Repeatedly press the AUDIO button to cycle through each available audio track.

**ANGLE (Remote control only):**

Press the ANGLE button to call up the camera angle menu.

Repeatedly press the ANGLE button to cycle through each available angle.

**CLEAR (Remote control only):**

Press the CLEAR button to clear all numeric inputs, if actuated prior to expiration of the 3-second timer.

**NUMERIC KEYPAD (0–9 & ≥10) (Remote control only):**

Press the NUMERIC KEYPAD to directly access disc chapters, titles or tracks by inputting their numeric value.

Use the "≥10" button to input numbers greater than or equal to 10. Up to three digits can be inputted when selecting the chapter/title/track number.

The subsequent actuation of numeric buttons will continuously shift the previously input number to the "left".

The chapter/title/track number will be automatically selected (if valid, based on media content) if 3 seconds expire without any keypad inputs.

The operator can cancel the input chapter/title/track number by actuating the CLEAR control prior to the expiration of the 3-second timer.

These functions can be used only for the DVD discs which correspond to them.

## Auxiliary input jacks

The auxiliary input jacks are located on the control panel. Compatible devices such as video games, camcorders and portable video players can be connected to the auxiliary jacks.

The auxiliary jacks are color coded for identification purposes.

- Yellow - video input
- White - left channel audio input
- Red - right channel audio input

To view the compatible device connected to the AUX jacks, press the MODE button. For more information, see "Mode select button" earlier in this section.

## CARE AND MAINTENANCE

Use a lightly dampened, lint free cloth to clean the surfaces of your NISSAN Mobile Entertainment System (DVD player face, screen, remote control, etc.).

Do not attempt to use the system in extreme temperature conditions [below -4°F (-20°C) or above 158°F (70°C)].

Do not attempt to operate the system in extreme humidity conditions (less than 10% or more than 75%).

**⚠ CAUTION**

- **Do not use any solvents or cleaning solutions when cleaning the video system.**
- **Do not use excessive force on the monitor screen.**
- **Avoid touching or scratching the monitor screen as it may become dirty or damaged.**

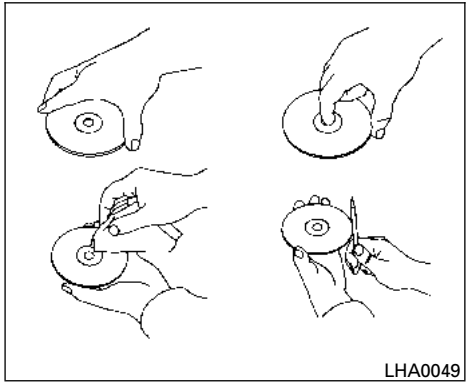


## HOW TO HANDLE THE DVD

**⚠ CAUTION**

- **Handle a DVD by its edges. Never touch the surface of the disc.**
- **To clean a disc, wipe the surface from the center to the outer edge using a clean, soft cloth. Do not wipe the disc using a circular motion.**
- **Do not use a conventional record cleaner, benzine, thinner or alcohol intended for industrial use.**
- **A new disc may be rough on its inner and outer edges. Remove the rough edges using the side of a pen or pencil as illustrated.**
- **Never attempt to use a DVD that has been cracked, deformed, or repaired using adhesive. Doing so may cause damage to the equipment.**

- Handle the DVD carefully to avoid contamination or flaws. Otherwise, signals may not be read properly.
- Do not write, draw or attach anything on any side of the DVD.
- Do not store the DVD in locations with direct sunlight or in high temperatures or humidity.
- Always place discs in the storage case when they are not being used.
- Do not put on any sticker or write anything on either surface of the DVD.

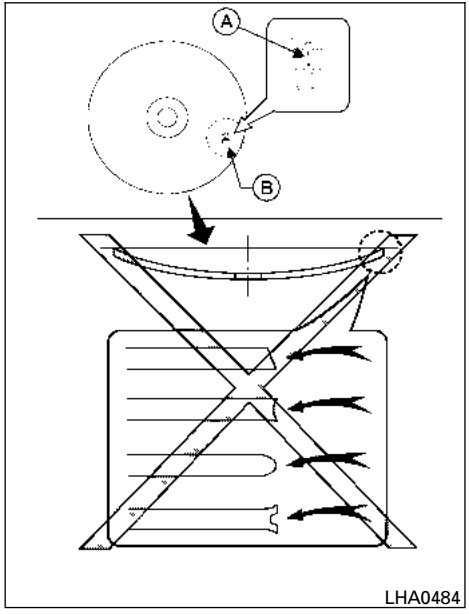


DVD player operation precautions

**Do not use the following DVDs as they may cause the DVD player to malfunction:**

- **3.1 in (8 cm) discs with an adapter.**
- **DVDs with a region code other than "1". The region code Ⓐ is displayed in a small symbol printed on the top of the DVD Ⓑ.**
- **DVDs that are not round.**
- **DVDs with a paper label.**
- **DVDs that are warped, scratched, or have unequal edges.**
- **Recordable digital video discs (DVD+R).**
- **Rewritable digital video discs (DVD+RW).**

**If a DVD with a paper label is used and becomes jammed, you may be able to reset the unit and eject the jammed disc with the following procedure:**

1. **Record the radio presets.**
2. **Disconnect the negative terminal from the battery for five minutes.**
3. **Reconnect the negative battery terminal.**
4. **Check to see if the jammed DVD has been ejected. If it has not, try to eject the DVD by pushing the eject button.**
5. **If the disc cannot be ejected see your NISSAN dealer for further assistance.**
6. **Re-program the radio presets.**

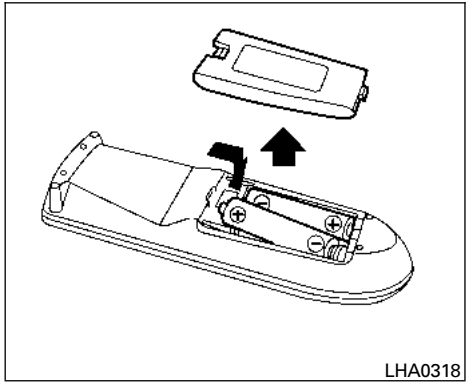


## Remote control and headphones battery replacement

Replace the battery as follows:

1. Open the lid.
2. Replace batteries with new ones.

- Size AA (remote control)
- Size AAA (headphones)

**Make sure that the ⊕ and ⊖ ends on the batteries match the markings inside the compartment.**

3. Close the lid securely.

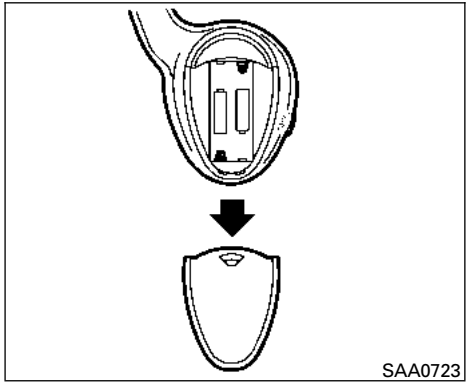


**If the battery is removed for any reason other than replacement, close the lid securely.**

- If you will not be using the remote control for long periods of time, remove the batteries.
- Replacement of the batteries is needed when the remote control only functions at extremely close distances to the DVD player or not at all.
- Be careful not to touch the battery terminal.
- An improperly disposed battery can harm the environment. Always confirm local regulations for battery disposal.
- When changing batteries, do not let dust or oil get on the remote control and headphones.

**FCC Notice:**

**Changes or modifications not expressly approved by the party responsible for compliance could void the user's authority to operate the equipment. This device complies with Part 15 of the FCC Rules and RSS-210 of Industry Canada. Operation is subject to the following two conditions: (1) This device may not cause harmful interference, and (2) this device must accept any interference received, including interference that may cause undesired operation of the device.**

## CAR PHONE OR CB RADIO

When installing a CB, ham radio or car phone in your vehicle, be sure to observe the following precautions; otherwise, the new equipment may adversely affect the engine control system and other electronic parts.

**WARNING**

- **A cellular phone should not be used for any purpose while driving so full attention may be given to vehicle operation. Some jurisdictions prohibit the use of cellular phones while driving.**
- **If you must make a call while your vehicle is in motion, the hands free cellular phone operational mode (if so equipped) is highly recommended. Exercise extreme caution at all times so full attention may be given to vehicle operation.**
- **If you are unable to devote full attention to vehicle operation while talking on the phone, pull off the road to a safe location and stop your vehicle.**

**CAUTION**

- **Keep the antenna as far away as possible from the electronic control modules.**
- **Keep the antenna wire more than 8 in (20 cm) away from the electronic control system harnesses. Do not route the antenna wire next to any harness.**
- **Adjust the antenna standing-wave ratio as recommended by the manufacturer.**
- **Connect the ground wire from the CB radio chassis to the body.**
- **For details, consult a NISSAN dealer.**

## BLUETOOTH® HANDS-FREE PHONE SYSTEM WITHOUT NAVIGATION SYSTEM (Type A) (if so equipped)

**WARNING**

- **Use a phone after stopping your vehicle in a safe location. If you have to use a phone while driving, exercise extreme caution at all times so full attention may be given to vehicle operation.**
- **If you are unable to devote full attention to vehicle operation while talking on the phone, pull off the road to a safe location and stop your vehicle.**

**CAUTION**

**To avoid discharging the vehicle battery, use a phone after starting the engine.**

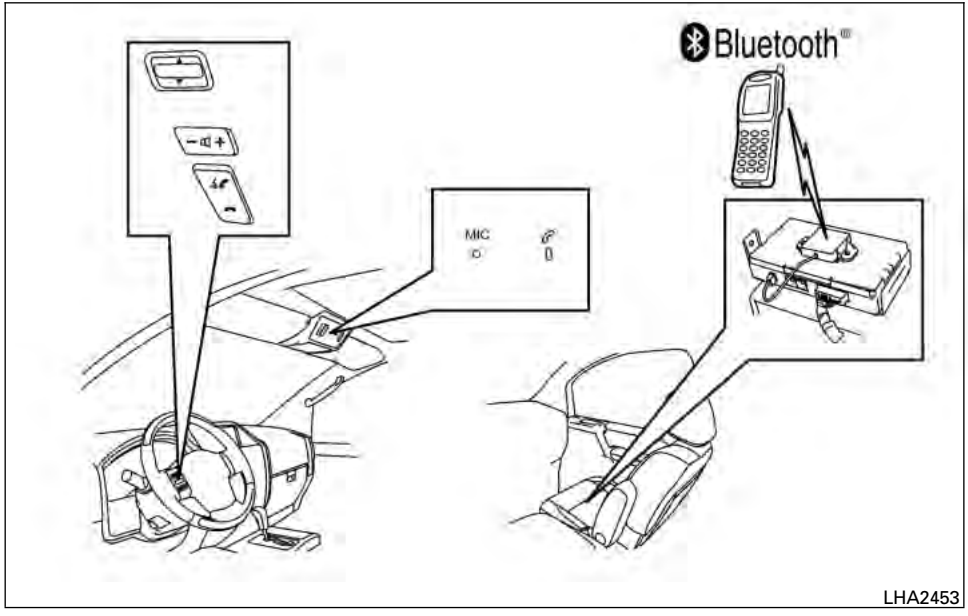


Your NISSAN is equipped with the Bluetooth® Hands-Free Phone System. If you have a compatible Bluetooth® enabled cellular phone, you can set up the wireless connection between your cellular phone and the in-vehicle phone module. With Bluetooth® wireless technology, you can make or receive a hands-free telephone call with your cellular phone in the vehicle.

Once your cellular phone is connected to the in-vehicle phone module, no other phone connecting procedure is required. Your phone is automatically connected with the in-vehicle phone module when the ignition switch is placed in the ON position with the previously connected cellular phone turned on and carried in the vehicle.

**NOTE:**

**Some devices require the user to accept connections to other Bluetooth® devices. If your phone does not connect automatically to the system, consult the phone's Owner's Manual for details on device operation.**

You can connect up to 5 different Bluetooth® cellular phones to the in-vehicle phone module. However, you can talk on only one cellular phone at a time.

Before using the Bluetooth® Hands-Free Phone System, refer to the following notes.

- Set up the wireless connection between a compatible cellular phone and the in-vehicle phone module before using the hands-free phone system.
- Some Bluetooth® enabled cellular phones may not be recognized or work properly. Please visit www.nissanusa.com/bluetooth for a recommended phone list and connecting instructions.

- You will not be able to use a hands-free phone under the following conditions:
  - Your vehicle is outside of the cellular service area.
  - Your vehicle is in an area where it is difficult to receive a cellular signal; such as in a tunnel, in an underground parking garage, near a tall building or in a mountainous area.
  - Your cellular phone is locked to prevent it from being dialed.
- When the radio wave condition is not ideal or ambient sound is too loud, it may be difficult to hear the other person's voice during a call.
- Do not place the cellular phone in an area surrounded by metal or far away from the in-vehicle phone module to prevent tone quality degradation and wireless connection disruption.
- While a cellular phone is connected through the Bluetooth® wireless connection, the battery power of the cellular phone may discharge quicker than usual. The Bluetooth® Hands-Free Phone System cannot charge cellular phones.
- If the hands-free phone system seems to be malfunctioning, see "Troubleshooting guide" in this section. You can also visit www.nissanusa.com/bluetooth for troubleshooting help.
- Some cellular phones or other devices may cause interference or a buzzing noise to come from the audio system speakers. Storing the device in a different location may reduce or eliminate the noise.
- Refer to the cellular phone Owner's Manual regarding the telephone charges, cellular phone antenna and body, etc.

## REGULATORY INFORMATION

FCC Regulatory information

- CAUTION: To maintain compliance with FCC's RF exposure guidelines, use only the supplied antenna. Unauthorized antenna, modification, or attachments could damage the transmitter and may violate FCC regulations.
- Operation is subject to the following two conditions:
  1. This device may not cause interference and
  2. this device must accept any interference, including interference that may cause undesired operation of the device.

IC Regulatory information

- Operation is subject to the following two conditions: (1) this device may not cause interference, and (2) this device must accept any interference, including interference that may cause undesired operation of the device.
- This Class B digital apparatus meets all requirements of the Canadian Interference-Causing Equipment Regulations.

BLUETOOTH® is a trademark owned by Bluetooth SIG, Inc. and licensed to Visteon.

## USING THE SYSTEM

The NISSAN Voice Recognition system allows hands-free operation of the Bluetooth® Phone System.

If the vehicle is in motion, some commands may not be available so full attention may be given to vehicle operation.

## Initialization

When the ignition switch is placed in the ON position, NISSAN Voice Recognition is initialized, which takes a few seconds. If the button is pressed before the initialization completes, the system will announce “Hands-free phone system not ready” and will not react to voice commands.

## Operating tips

To get the best performance out of the NISSAN Voice Recognition system, observe the following:

- Keep the interior of the vehicle as quiet as possible. Close the windows to eliminate surrounding noises (traffic noises, vibration sounds, etc.), which may prevent the system from recognizing voice commands correctly.
- Wait until the tone sounds before speaking a command. Otherwise, the command will not be received properly.
- Start speaking a command within 5 seconds after the tone sounds.
- Speak in a natural voice without pausing between words.

## Giving voice commands

To operate NISSAN Voice Recognition, press and release the button located on the steering wheel. After the tone sounds, speak a command.

The command given is picked up by the microphone, and voice feedback is given when the command is accepted.

- If you need to hear the available commands for the current menu again, say “Help” and the system will repeat them.
- If a command is not recognized, the system announces, “Command not recognized. Please try again.” Make sure the command is said exactly as prompted by the system and repeat the command in a clear voice.
- If you want to go back to the previous command, you can say “Go back” or “Correction” any time the system is waiting for a response.
- You can cancel a command when the system is waiting for a response by saying, “Cancel” or “Quit.” The system announces “Cancel” and ends the VR session. You can also press and hold the button on the steering wheel for 5 seconds at any time to end the VR session. Whenever the VR session is cancelled, a double beep is played to indicate you have exited the system.
- If you want to adjust the volume of the voice feedback, press the volume control switches (+ or -) on the steering wheel while being provided with feedback. You can also use the radio volume control knob.
- In most cases you can interrupt the voice feedback to speak the next command by pressing the button on the steering wheel.
- To use the system faster, you may speak the second level commands with the main menu command on the main menu. For example, press the button and after the tone say, “Call Redial.”

### How to say numbers

NISSAN Voice Recognition requires a certain way to speak numbers in voice commands. Refer to the following rules and examples.

- Either “zero” or “oh” can be used for “0”.

  Example: 1-800-662-6200

  – “One eight oh oh six six two six two oh oh”, or

  – “One eight zero zero six six two six two oh oh”

- Words can be used for the first 4 digits places only.

  Example: 1-800-662-6200

  – “One eight hundred six six two six two oh oh”,

  – NOT “One eight hundred six six two sixty two hundred,” and

  – NOT “One eight oh oh six six two sixty two hundred”

- Numbers can be spoken in small groups. The system will prompt you to continue entering digits, if desired.

  Example: 1-800-662-6200

  – “One eight zero zero”

  The system repeats the numbers and prompts you to enter more.

  – “six six two”

  The system repeats the numbers and prompts you to enter more.

  – “six two zero zero”

- Say “pound” for “#”. Say “star” for “*” (available when using the “Special Number” command and the “Send” command during a call).

  See “List of voice commands” and “Special number” in this section for more information.

  Example: 1-555-1212 *123

  – “One five five five one two one two star one two three”

- Say “plus” for “+” (available only when using the “Special Number” command).

- Say “pause” for a 2-second pause (available only when storing a phone book number).

**NOTE:**

**For best results, say phone numbers as single digits.**

The voice command “Help” is available at any time. Please use the “Help” command to get information on how to use the system.

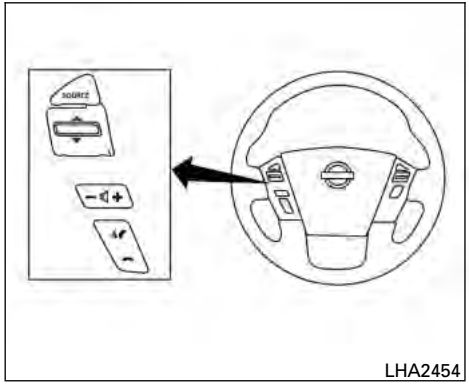


## CONTROL BUTTONS

The control buttons for the Bluetooth® Hands-Free Phone System are located on the steering wheel.

PHONE/SEND

Press the button to initiate a VR session or answer an incoming call.

You can also use the button to interrupt the system feedback and give a command at once. See “List of voice commands” and “During a call” in this section for more information.

PHONE/END

While the voice recognition system is active, press and hold the button for 5 seconds to quit the voice recognition system at any time.

TUNING SWITCH

While using the voice recognition system, tilt the tuning switch up or down to manually control the phone system.

## GETTING STARTED

The following procedures will help you get started using the Bluetooth® Hands-Free Phone System with NISSAN Voice Recognition. For additional command options, refer to “List of voice commands” in this section.

### Choosing a language

You can interact with the Bluetooth® Hands-Free Phone System using English, Spanish or French.

To change the language, perform the following.

1. Press and hold the button for more than 5 seconds.
2. The system announces: “Press the PHONE/SEND ( ) button for the hands-free phone system to enter the voice adaptation mode or press the PHONE/END ( ) button to select a different language.”
3. Press the button.

   For information on voice adaptation, see “Voice Adaptation (VA) mode” in this section.
4. The system announces the current language and gives you the option to change the language to Spanish (in Spanish) or French (in French). To select the current language, press the PHONE/SEND ( ) button. To select a different language, tilt the tuning switch ( or ) up or down.

**NOTE:**

**You must press the button within 5 seconds to change the language.**

5. If you decide not to change the language, do not press either button. After 5 seconds, the VR session will end, and the language will not be changed.

## Connecting procedure

**NOTE:**

**The connecting procedure must be performed when the vehicle is stationary. If the vehicle starts moving during the procedure, the procedure will be cancelled.**

```
Main Menu
 "Connect phone" Ⓐ
   "Add phone" Ⓑ
      Initiate from handset Ⓒ
         Name phone Ⓓ
```

1. Press the button on the steering wheel. The system announces the available commands.
2. Say: "Connect phone" Ⓐ. The system acknowledges the command and announces the next set of available commands.
3. Say: "Add phone" Ⓑ. The system acknowledges the command and asks you to initiate connecting from the phone handset Ⓒ.

   The connecting procedure of the cellular phone varies according to each cellular phone model. See the cellular phone Owner's Manual for details. You can also visit www.nissanusa.com/bluetooth for instructions on connecting NISSAN recommended cellular phones.

   When prompted for a Passkey code, enter "1234" from the handset. The Passkey code "1234" has been assigned by NISSAN and cannot be changed.
4. The system asks you to say a name for the phone Ⓓ.

   If the name is too long or too short, the system tells you, then prompts you for a name again.

   Also, if more than one phone is connected and the name sounds too much like a name already used, the system tells you, then prompts you for a name again.

## Making a call by entering a phone number

```
Main Menu
 "Call" Ⓐ
   "Phone Number" Ⓑ
      Speak the digits Ⓒ
         "Dial" Ⓓ
```

1. Press the button on the steering wheel. A tone will sound.
2. Say: "Call" Ⓐ. The system acknowledges the command and announces the next set of available commands.
3. Say "Phone Number" Ⓑ. The system acknowledges the command and announces the next set of available commands.

   Say: "Special Number" to dial more than 10 digits or any special characters.
4. Say the number you wish to call starting with the area code in single digit format Ⓒ. If the system has trouble recognizing the correct phone number, try entering the number in the following groups: 3-digit area code, 3-digit prefix and the last 4-digits. For example, 555-121-3354 can be said as "five five five" as the 1st group, then "one two one" as the 2nd group, and "three three five

four" as the 3rd group. For dialing more than 10 digits or any special characters, say "Special Number". See "How to say numbers" in this section for more information.

5. When you have finished speaking the phone number, the system repeats it back and announces the available commands.
6. Say: "Dial" Ⓓ. The system acknowledges the command and makes the call.

For additional command options, see "List of voice commands" in this section.

## Receiving a call

When you hear the ring tone, press the button on the steering wheel.

Once the call has ended, press the button on the steering wheel.

**NOTE:**

**If you do not wish to take the call when you hear the ring tone, press the button on the steering wheel.**

For additional command options, see "List of voice commands" later in this section.

## LIST OF VOICE COMMANDS

```
Main Menu
        "Call"
        "Phonebook"
        "Recent Calls"
        "Connect Phone"
```

When you press and release the button on the steering wheel, you can choose from the commands on the Main Menu. The following pages describe these commands and the commands in each sub-menu.

**Remember to wait for the tone before speaking.**

After the main menu, you can say "Help" to hear the list of commands currently available any time the system is waiting for a response.

If you want to end an action without completing it, you can say "Cancel" or "Quit" at any time the system is waiting for a response. The system will end the VR session. Whenever the VR session is cancelled, a double beep is played to indicate you have exited the system.

If you want to go back to the previous command, you can say "Go back" or "Correction" any time the system is waiting for a response.

## "Call"

```
Main Menu
    "Call"
        (Speak name) Ⓐ
        "Phone Number"
            (Speak Digits) Ⓑ
            "Special Number" Ⓒ
        "Redial" Ⓓ
        "Call Back" Ⓔ
```

**(Speak name) Ⓐ**

If you have stored entries in the phonebook, you can dial a number associated with a name and location.

See "Phonebook" in this section to learn how to store entries.

When prompted by the system, say the name of the phone book entry you wish to call. The system acknowledges the name.

If there are multiple locations associated with the name, the system asks you to choose the location.

Once you have confirmed the name and location, the system begins the call.

**(Speak Digits) Ⓑ**

When prompted by the system, say the number you wish to call. Refer to “How to say numbers” and “Making a call by entering a phone number” in this section for more details.

**“Special Number” Ⓒ**

For dialing more than 10 digits or any special characters, say “Special Number”. When the system acknowledges the command, the system will prompt you to speak the number.

**“Redial” Ⓓ**

Use the Redial command to call the last number that was dialed.

The system acknowledges the command, repeats the number and begins dialing.

If a redial number does not exist, the system announces, “There is no number to redial” and ends the VR session.

**“Call Back” Ⓔ**

Use the Call Back command to dial the number of the last incoming call within the vehicle.

The system acknowledges the command, repeats the number and begins dialing.

If a call back number does not exist, the system announces, “There is no number to call back” and ends the VR session.

**During a call**

During a call there are several command options available. Press the button on the steering wheel to mute the receiving voice and enter commands.

- “Help” — The system announces the available commands.
- “Go back/Correction” — The system announces “Go back,” ends the VR session and returns to the call.
- “Cancel/Quit” — The system announces “Cancel,” ends the VR session and returns to the call.
- “Send/Enter/Call/Dial” — Use the Send command to enter numbers, “*” or “#” during a call. For example, if you were directed to dial an extension by an automated system:

  Say: “Send one two three four.”

  The system acknowledges the command and sends the tones associated with the numbers. The system then ends the VR session and returns to the call. Say “star” for “*”, Say “pound” for “#”.
- “Transfer call” — Use the Transfer Call command to transfer the call from the Bluetooth® Hands-Free Phone System to the cellular phone when privacy is desired.

  The system announces, “Transfer call. Call transferred to privacy mode.” The system then ends the VR session.

  To reconnect the call from the cellular phone to the Bluetooth® Hands-Free System, press the button.
- “Mute” — Use the Mute command to mute your voice so the other party cannot hear it. Use the mute command again to unmute your voice.

**NOTE:**

**If a call is ended or the cellular phone network connection is lost while the Mute feature is on, the Mute feature will be reset to “off” for the next call so the other party can hear your voice.**

## “Phonebook” (phones without automatic phonebook download function)

**NOTE:**

**The “Transfer Entry” command is not available when the vehicle is moving.**

| |
|---|
| Main Menu |
| “Phonebook” |
| “Transfer Entry” Ⓐ |
| “Delete Entry” Ⓑ |
| “List Names” Ⓒ |

For phones that do not support automatic download of the phonebook (PBAP Bluetooth® profile), the “Phonebook” command is used to manually add entries to the vehicle phonebook.

The phonebook stores up to 40 names for each phone connected to the system.

**NOTE:**

**Each phone has its own separate phonebook. You cannot access Phone A’s phonebook if you are currently connected with Phone B.**

**“Transfer Entry” Ⓐ**

Use the Transfer Entry command to store a new name in the system.

When prompted by the system, say the name you would like to give the new entry.

For example, say: “Mary.”

If the name is too long or too short, the system tells you, then prompts you for a name again.

Also, if the name sounds too much like a name already stored, the system tells you, then prompts you for a name again.

The system will ask you to transfer a phone number stored in the cellular phone’s memory.

Enter a phone number by voice command:

For example, say: “five five five one two one two.” See “How to say numbers” in this section for more information.

To transfer a phone number stored in the cellular phone’s memory:

Say “Transfer entry.” The system acknowledges the command and asks you to initiate the transfer from the phone handset. The new contact phone number will be transferred from the cellular phone via the Bluetooth® communication link.

The transfer procedure varies according to each cellular phone. See the cellular phone Owner’s Manual for details. You can also visit www.nissanusa.com/bluetooth for instructions on transferring phone numbers from NISSAN recommended cellular phones.

The system repeats the number and prompts you for the next command. When you have finished entering numbers or transferring an entry, choose “Store.”

The system confirms the name, location and number.

**“Delete Entry” Ⓑ**

Use the Delete Entry command to erase one entry from the phonebook. After the system recognizes the command, speak the name to delete or say “List Names” to choose an entry.

**“List Names” Ⓒ**

Use the List Names command to hear all the names in the phonebook.

The system recites the phonebook entries but does not include the actual phone numbers. When the playback of the list is complete, the system goes back to the main menu.

You can stop the playback of the list at any time by pressing the button on the steering wheel. The system ends the VR session.

## “Phonebook” (phones with automatic phonebook download function)

**NOTE:**

**The “Transfer Entry” command is not available when the vehicle is moving.**

Main Menu
- “Phonebook”
  - Speak a Name
  - “List Names” Ⓐ
  - “Record Name” Ⓑ

For phones that support automatic download of the phonebook (PBAP Bluetooth® profile), the “Phonebook” command is used to manage entries in the vehicle phonebook. You can say the name of an entry at this menu to initiate dialing of that entry.

The phonebook stores up to 1000 names for each phone connected to the system.

When a phone is connected to the system, the phonebook is automatically downloaded to the vehicle. This feature allows you to access your phonebook from the Bluetooth® system and call contacts by name. You can record a custom voice tag for contact names that the system has difficulty recognizing. For more information see “Record name” in this section.

**NOTE:**

**Each phone has its own separate phonebook. You cannot access Phone A’s phonebook if you are currently connected with Phone B.**

**“List Names” Ⓐ**

Use the List Names command to hear all the names and locations in the phone book.

The system recites the phone book entries but does not include the actual phone numbers. When the playback of the list is complete, the system goes back to the main menu.

You can stop the playback of the list at any time by pressing the button on the steering wheel. The system ends the VR session. See the “Record name” command in this section for information about recording custom voice tags for list entries that the system has difficulty pronouncing.

**“Record Name” Ⓑ**

The system allows you to record custom voice tags for contact names in the phonebook that the vehicle has difficulty recognizing. This feature can also be used to record voice tags to directly dial an entry with multiple numbers. Up to 40 voice tags can be recorded to the system.

## “Recent Calls”

Main Menu
- “Recent Calls”
  - “Outgoing” Ⓐ
  - “Incoming” Ⓑ
  - “Missed” Ⓒ

Use the Recent Calls command to access outgoing, incoming or missed calls.

**“Outgoing” Ⓐ**

Use the Outgoing command to list the outgoing calls made from the vehicle.

**“Incoming” Ⓑ**

Use the Incoming command to list the incoming calls made to the vehicle.

**“Missed” Ⓒ**

Use the Missed command to list the calls made to the vehicle that were not answered.

## “Connect Phone”

**NOTE:**

**The Add Phone command is not available when the vehicle is moving.**

| |
|---|
| Main Menu |
| “Connect Phone” |
| “Add Phone” Ⓐ |
| “Select Phone” Ⓑ |
| “Delete Phone” Ⓒ |
| “Turn Bluetooth OFF” Ⓓ |

Use the Connect Phone commands to manage the phones connecting to the vehicle or to enable the Bluetooth® function on the vehicle.

**“Add Phone” Ⓐ**

Use the Add Phone command to add a phone to the vehicle. See “Connecting procedure” in this section for more information.

**“Select Phone” Ⓑ**

Use the Select Phone command to select from a list of phones connected to the vehicle. The system will list the names assigned to each phone and then prompt you for the phone you wish to select. Only one phone can be active at a time.

**“Delete Phone” Ⓒ**

Use the Delete Phone command to delete a phone that is connected to the vehicle. The system will list the names assigned to each phone and then prompt you for the phone you wish to delete. Deleting a phone from the vehicle will also delete that phonebook for that phone.

**“Turn Bluetooth OFF” Ⓓ**

Use the Turn Bluetooth OFF command to prevent a wireless connection to your phone.

## VOICE ADAPTATION (VA) MODE

Voice Adaptation allows up to two out-of-dialect users to train the system to improve recognition accuracy. By repeating a number of commands, the users can create a voice model of their own voice that is stored in the system. The system is capable of storing a different voice adaptation model for each connected phone.

### Training procedure

The procedure for training a voice is as follows.

1. Position the vehicle in a reasonably quiet outdoor location.
2. Sit in the driver’s seat with the engine running, the parking brake on, and the transmission in P (Park).
3. Press and hold the button for more than 5 seconds.
4. The system announces: “Press the PHONE/SEND ( ) button for the hands-free phone system to enter the voice adaptation mode or press the PHONE/END ( ) button to select a different language.”
5. Press the button.

   For information on selecting a different language, see “Choosing a language” in this section.
6. Voice memory A or memory B is selected automatically. If both memory locations are already in use, the system will prompt you to overwrite one. Follow the instructions provided by the system.
7. When preparation is complete and you are ready to begin, press the button.
8. The VA mode will be explained. Follow the instructions provided by the system.
9. When training is finished, the system will tell you an adequate number of phrases have been recorded.

10. The system will announce that voice adaptation has been completed and the system is ready.

The VA mode will stop if:

- The button is pressed for more than 5 seconds in VA mode.
- The vehicle begins moving during VA mode.
- The ignition switch is placed in the OFF or LOCK position.

## Training phrases

During the VA mode, the system instructs the trainer to say the following phrases. (The system will prompt you for each phrase.)

- phonebook transfer entry
- dial three oh four two nine
- delete call back number
- incoming
- transfer entry
- eight pause nine three two pause seven
- delete all entries
- call seven two four zero nine
- phonebook delete entry
- next entry
- dial star two one seven oh
- yes
- no
- select
- missed
- dial eight five six nine two
- Bluetooth on
- outgoing
- call three one nine oh two
- nine seven pause pause three oh eight
- cancel
- call back number
- call star two zero nine five
- delete phone
- dial eight three zero five one
- record name
- four three pause two nine pause zero
- delete redial number
- phonebook list names
- call eight oh five four one
- correction
- connect phone
- dial seven four oh one eight
- previous entry
- delete
- dial nine seven two six six
- call seven six three oh one
- go back
- call five six two eight zero
- dial six six four three seven

## MANUAL CONTROL

While using the voice recognition system, it is possible to select menu options by using the steering wheel controls instead of speaking voice commands. The manual control mode does not allow dialing a phone number by digits. The user may select an entry from the Phonebook or Recent Calls lists. To re-activate voice recognition, exit the manual control mode by pressing and holding the PHONE/END ( ) button. At that time, pressing the PHONE/SEND ( ) button will start the Hands Free Phone System.

## Operating tips

- To enter manual control mode, start the voice recognition system and tilt the tuning ( ▲▼ ) switch up or down. The system will speak "Showing Manual Options" when manual controls are initially activated.
- To browse the menu options, tilt the tuning ( ▲▼ ) switch up or down. The system will always speak the current menu option. Depending on the audio display, it will also show the current menu option.
- To select the current menu option, press the PHONE/SEND ( ) button.
- To go back to the previous menu, press the PHONE/END ( ) button. If the current menu is the Main Menu, pressing the PHONE/END ( ) button will exit the Phone system.
- To exit the manual control mode, press and hold the PHONE/END ( ) button for 5 seconds.

## TROUBLESHOOTING GUIDE

The system should respond correctly to all voice commands without difficulty. If problems are encountered, try the following solutions.

Where the solutions are listed by number, try each solution in turn, starting with number 1, until the problem is resolved.

| Symptom | Solution |
|---|---|
| System fails to interpret the command correctly. | 1. Ensure that the command is valid. See “List of voice commands” in this section. |
| | 2. Ensure that the command is spoken after the tone. |
| | 3. Speak clearly without pausing between words and at a level appropriate to the ambient noise level in the vehicle. |
| | 4. Ensure that the ambient noise level is not excessive (for example, windows open or defroster on). NOTE: If it is too noisy to use the phone, it is likely that the voice commands will not be recognized. |
| | 5. If more than one command was said at a time, try saying the commands separately. |
| | 6. If the system consistently fails to recognize commands, the voice training procedure should be carried out to improve the recognition response for the speaker. See “Voice Adaptation (VA) mode” in this section. |
| The system consistently selects the wrong entry from the phone book. | 1. Ensure that the phone book entry name requested matches what was originally stored. This can be confirmed by using the “List Names” command. See “Phonebook” in this section. |
| | 2. Replace one of the names being confused with a new name. |

## BLUETOOTH® HANDS-FREE PHONE SYSTEM WITHOUT NAVIGATION SYSTEM (Type B) (if so equipped)

**WARNING**

- **Use a phone after stopping your vehicle in a safe location. If you have to use a phone while driving, exercise extreme caution at all times so full attention may be given to vehicle operation.**
- **If you are unable to devote full attention to vehicle operation while talking on the phone, pull off the road to a safe location and stop your vehicle.**

**CAUTION**

**To avoid discharging the vehicle battery, use a phone after starting the engine.**

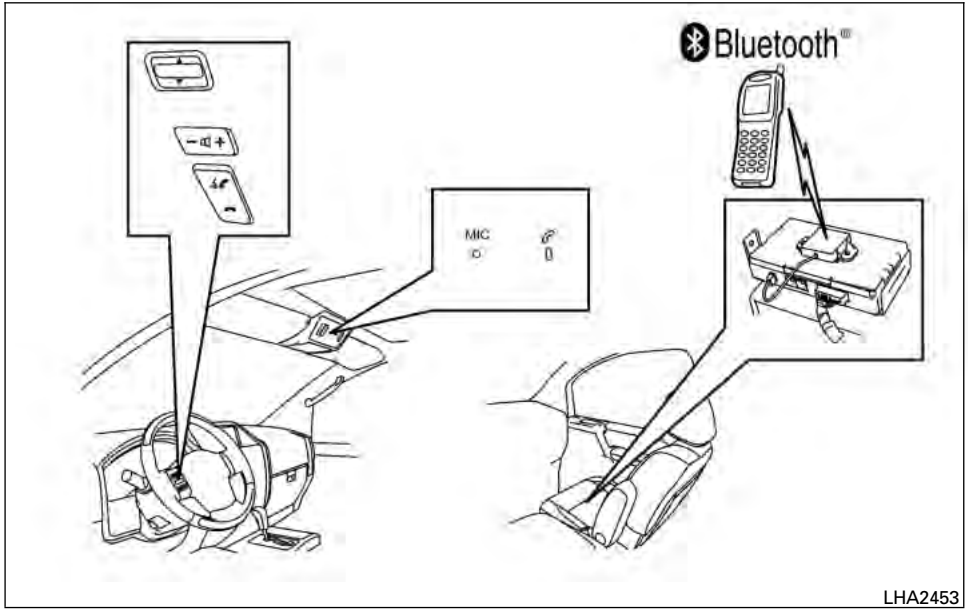

LHA2453

Your NISSAN is equipped with the Bluetooth® Hands-Free Phone System. If you have a compatible Bluetooth® enabled cellular phone, you can set up the wireless connection between your cellular phone and the in-vehicle phone module. With Bluetooth® wireless technology, you can make or receive a hands-free telephone call with your cellular phone in the vehicle.

Once your cellular phone is connected to the in-vehicle phone module, no other phone connecting procedure is required. Your phone is automatically connected with the in-vehicle

phone module when the ignition switch is placed in the ON position with the previously connected cellular phone turned on and carried in the vehicle.

**NOTE:**

**Some devices require the user to accept connections to other Bluetooth® devices. If your phone does not connect automatic ally to the system, consult the phone's Owner's Manual for details on device operation.**

You can connect up to 5 different Bluetooth® cellular phones to the in-vehicle phone module. However, you can talk on only one cellular phone at a time.

Before using the Bluetooth® Hands-Free Phone System, refer to the following notes.

- Set up the wireless connection between a compatible cellular phone and the in-vehicle phone module before using the hands-free phone system.
- Some Bluetooth® enabled cellular phones may not be recognized or work properly. Please visit www.nissanusa.com/bluetooth for a recommended phone list and connecting instructions.
- You will not be able to use a hands-free phone under the following conditions:
  - Your vehicle is outside of the cellular service area.
  - Your vehicle is in an area where it is difficult to receive a cellular signal; such as in a tunnel, in an underground parking garage, near a tall building or in a mountainous area.
  - Your cellular phone is locked to prevent it from being dialed.
- When the radio wave condition is not ideal or ambient sound is too loud, it may be difficult to hear the other person's voice during a call.
- Do not place the cellular phone in an area surrounded by metal or far away from the in-vehicle phone module to prevent tone quality degradation and wireless connection disruption.
- While a cellular phone is connected through the Bluetooth® wireless connection, the battery power of the cellular phone may discharge quicker than usual. The Bluetooth® Hands-Free Phone System cannot charge cellular phones.
- If the hands-free phone system seems to be malfunctioning, see "Troubleshooting guide" in this section. You can also visit www.nissanusa.com/bluetooth for troubleshooting help.
- Some cellular phones or other devices may cause interference or a buzzing noise to come from the audio system speakers. Storing the device in a different location may reduce or eliminate the noise.
- Refer to the cellular phone Owner's Manual regarding the telephone charges, cellular phone antenna and body, etc.

## REGULATORY INFORMATION

FCC Regulatory information

- CAUTION: To maintain compliance with FCC's RF exposure guidelines, use only the supplied antenna. Unauthorized antenna, modification, or attachments could damage the transmitter and may violate FCC regulations.
- Operation is subject to the following two conditions:
  1. This device may not cause interference and
  2. this device must accept any interference, including interference that may cause undesired operation of the device.

IC Regulatory information

– Operation is subject to the following two conditions: (1) this device may not cause interference, and (2) this device must accept any interference, including interference that may cause undesired operation of the device.

– This Class B digital apparatus meets all requirements of the Canadian Interference-Causing Equipment Regulations.

BLUETOOTH® is a trademark owned by Bluetooth SIG, Inc. and licensed to Visteon.

## USING THE SYSTEM

The NISSAN Voice Recognition system allows hands-free operation of the Bluetooth® Phone System.

If the vehicle is in motion, some commands may not be available so full attention may be given to vehicle operation.

### Initialization

When the ignition switch is placed in the ON position, NISSAN Voice Recognition is initialized, which takes a few seconds. If the button is pressed before the initialization completes, the system will announce "Hands-free phone system not ready" and will not react to voice commands.

### Operating tips

To get the best performance out of the NISSAN Voice Recognition system, observe the following:

- Keep the interior of the vehicle as quiet as possible. Close the windows to eliminate surrounding noises (traffic noises, vibration sounds, etc.), which may prevent the system from recognizing voice commands correctly.
- Wait until the tone sounds before speaking a command. Otherwise, the command will not be received properly.
- Start speaking a command within 5 seconds after the tone sounds.
- Speak in a natural voice without pausing between words.

### Giving voice commands

To operate NISSAN Voice Recognition, press and release the button located on the steering wheel. After the tone sounds, speak a command.

The command given is picked up by the microphone, and voice feedback is given when the command is accepted.

- If you need to hear the available commands for the current menu again, say "Help" and the system will repeat them.
- If a command is not recognized, the system announces, "Command not recognized. Please try again." Make sure the command is said exactly as prompted by the system and repeat the command in a clear voice.
- If you want to go back to the previous command, you can say "Go back" or "Correction" any time the system is waiting for a response.
- You can cancel a command when the system is waiting for a response by saying, "Cancel" or "Quit." The system announces "Cancel" and ends the VR session. You can also press and hold the button on the steering wheel for 5 seconds at any time to end the VR session. Whenever the VR session is cancelled, a double beep is played to indicate you have exited the system.

- If you want to adjust the volume of the voice feedback, press the volume control switches (+ or -) on the steering wheel while being provided with feedback. You can also use the radio volume control knob.
- In most cases you can interrupt the voice feedback to speak the next command by pressing the button on the steering wheel.
- To use the system faster, you may speak the second level commands with the main menu command on the main menu. For example, press the button and after the tone say, “Call Redial.”

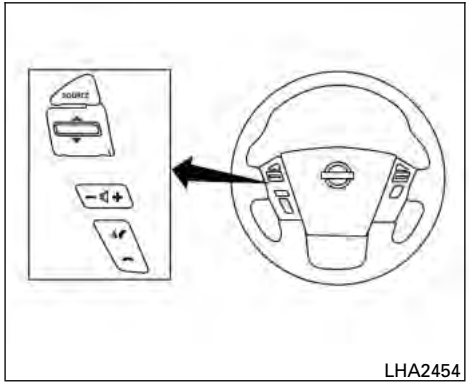


## CONTROL BUTTONS

The control buttons for the Bluetooth® Hands-Free Phone System are located on the steering wheel.

PHONE/SEND

Press the button to initiate a VR session or answer an incoming call.

You can also use the button to interrupt the system feedback and give a command at once. See “List of voice commands” and “During a call” in this section for more information.

PHONE/END

While the voice recognition system is active, press and hold the button for 5 seconds to quit the voice recognition system at any time.

Tuning switch

While using the voice recognition system, tilt the tuning switch up or down to manually control the phone system.

## CONNECTING PROCEDURE

To connect a phone to the Bluetooth® Hands-Free Phone System:

1. Press the SETTING button.

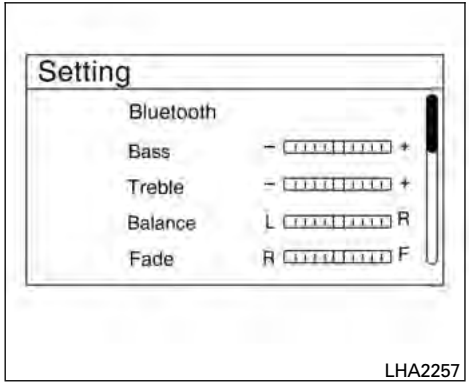


2. Use the TUNE/SCROLL knob to select “Bluetooth” and then press the ENTER button.

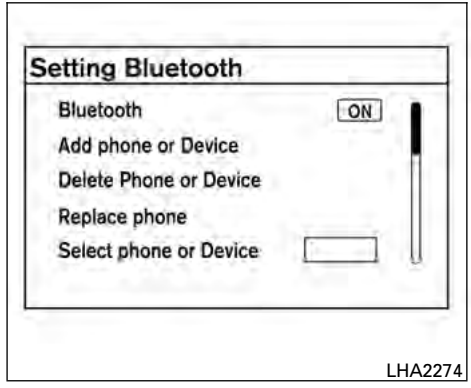


3. Use the TUNE/SCROLL knob to select “Add Phone or Device” and then press the ENTER button.
4. When a message with a PIN appears on the screen, operate the Bluetooth® phone to enter the PIN.

The connecting procedure varies according to each phone. See the phone’s Owner’s Manual for details. You can also visit www.nissanusa.com/bluetooth or call the NISSAN Consumer Affairs Department for instructions on connecting recommended cellular phones.

## VOICE COMMANDS

Voice commands can be used to operate the Bluetooth® Hands-Free Phone System. Press the button and say “Phone” to bring up the phone command menu. The available options are:

- Call
- Phonebook
- Recent Calls
- Send Text
- Read Text
- Select Phone

### “Call”

For more information on the “Call” command, see “Making a call” in this section.

### “Phonebook”

The following commands are available under “Phonebook”:

- (a name)
  Say a name in the phonebook to bring up a list of options for that phonebook entry. The system will say the name it interpreted based on the voice command provided. If the name is incorrect, say “Correction” to hear another name.
  Once the correct phonebook entry is identified, say “Dial” to dial the number or “Send Text” to send a text message to that number. Say “Record Name” to record a name for the phonebook entry. Say “Delete Recording” to delete a recorded name for the phonebook entry.
- List Names
  Speak this command to have the system list the names in the phonebook one by one alphabetically. Say “Dial” to dial the number of the current name or “Send Text” to send a text message to that number. Say “Next Entry” or “Previous Entry” to move through the list alphabetically. Say “Record Name” to record a name for the current phonebook entry. Say “Delete Recording” to delete a recorded name for the current phonebook entry.
- Transfer Entry
  This command can be used to transfer multiple contacts at a time. To enable manual contact transfer capability, set “Phonebook Download” to “Off” in the Setting menu. The ability to transfer contacts via the OPP Bluetooth profile depends on your mobile phone. See your phone’s Owner’s Manual for details and instructions.
- Delete Entry
  Speak this command to delete an entry in the phonebook. Choose an entry to delete by speaking the desired name or say “List Names”.

## “Recent Calls”

The following commands are available under “Recent Calls”:

- Incoming Calls
  Speak this command to list the last five incoming calls to the vehicle. If the call is from an entry in the phonebook, the name will be displayed. Otherwise, the phone number of the incoming call will be displayed.
  Say “Dial” to call the number or “Send Text” to send a text message to that number. Say “Next Entry” or “Previous Entry” to move through the list of incoming calls.
- Missed Calls
  Speak this command to list the last five missed calls to the vehicle. If the call is from an entry in the phonebook, the name will be displayed. Otherwise, the phone number of the missed call will be displayed.
  Say “Dial” to call the number or “Send Text” to send a text message to that number. Say “Next Entry” or “Previous Entry” to move through the list of missed calls.
- Outgoing Calls
  Speak this command to list the last five outgoing calls from the vehicle. If the call was to an entry in the phonebook, the name will be displayed. Otherwise, the phone number of the outgoing call will be displayed.
  Say “Dial” to call the number or “Send Text” to send a text message to that number. Say “Next Entry” or “Previous Entry” to move through the list of outgoing calls.
- Redial
  Speak this command to call the last number dialed.
- Call Back
  Speak this command to call the number of the last incoming call to the vehicle.

### “Send Text / Read Text”

For more information on these commands, see “Text messaging” in this section.

### “Select Phone”

Speak this command to select a phone to use from a list of those phones connected to the vehicle.

## MAKING A CALL

To make a call from a phone connected to the vehicle’s Bluetooth® Hands-Free Phone System:

- Press the button.
- The system will prompt you for a command.
- Select one of the available voice commands to continue:
- “(a name)” – Speak the name of a phonebook entry to place a call to that entry. The system will respond with the name it interpreted from your command and will prompt you to confirm that the name is correct. Say “Yes” to initiate the call or “No” to hear another name from the phonebook.
- “Number” – Speak this command to place a call by inputting numbers.
  For 7- and 10-digit phone numbers, speak the numbers. When finished, say “Dial” to initiate the call. Say “Correction” at any time in the process to correct a misspoken or misinterpreted number.
  For phone numbers with more digits or special characters, say “Special Number”, then speak the digits. Up to 24 digits can be entered. Available special characters are “star”, “pound”, “plus” and “pause”. When finished, say “Dial” to initiate the call. Say “Correction” at any time in the process to correct a misspoken or misinterpreted number or character.
- “Redial” – Speak this command to dial the number of the last outgoing call. The system will display “Redialing <name/number>”. The name of the phonebook entry will be displayed if it available, otherwise the number being redialed will be displayed.
- “Call Back” –Speak this command to dial the number of the last incoming call. The system will display “Calling back <name/number.”. The name of the phonebook entry will be displayed if it available, otherwise the number being called back will be displayed.

LHA2293

## RECEIVING A CALL

When a call is received by the phone connected to the vehicle’s Bluetooth® Hands-Free Phone System, the call information is displayed on either the vehicle information display or both the vehicle information display and he control panel display.

Press the button to accept the call. Press the button to reject the call.

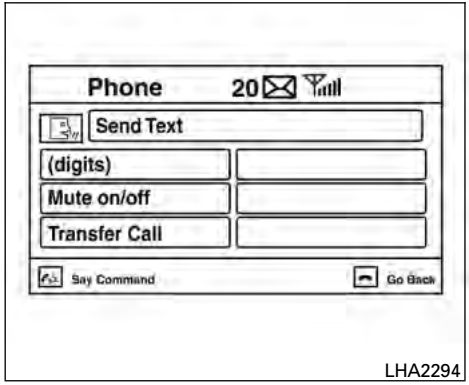


## DURING A CALL

While a call is active, press the button to access additional options. Speak one of the following commands:

- "(numbers)" – Speak numbers and then say "Send" or say "Correction" to change the numbers entered.
- "Mute On" or "Mute Off" – Speak the command to mute or unmute the system.
- "Transfer Call" – Speak this command to transfer the call to the handset. To transfer the call back from the handset to the Bluetooth® Hands-Free Phone System, press the button and confirm when prompted.

If supported by the phone, the Bluetooth® Hands-Free Phone System allows for call waiting functionality. If a call is received while another call is already active, a message will be displayed on the screen. Press the button to hold the active call and switch to the second call. Press the button to reject the second call.

While the second call is active, pressing the button will allow the same commands that available during any call as well as two additional commands:

- "Switch Call" – Speak this command to hold the second call and switch back to the original call.
- "End Other Call" – Speak this command to stay with the second call and end the original call.

Press the button to accept the call. Press the button to reject the call.

## ENDING A CALL

To end an active call, press the button.

## TEXT MESSAGING

**WARNING**

- **Use the text messaging feature after stopping your vehicle in a safe location. If you have to use the feature while driving, exercise extreme caution at all times so full attention may be given to vehicle operation.**
- **If you are unable to devote full attention to vehicle operation while using the text messaging feature, pull off the road to a safe location and stop your vehicle.**

**NOTE:**

**This feature is automatically disabled if the connected device does not support the Message Access Profile (MAP). See the phone's Owner's Manual for details and instructions.**

The system allows for the sending and receiving of text messages through the vehicle interface.

**Sending a text message:**

1. Press the button.
2. Say “Send Text”.
3. The system will provide a list of available commands in order to determine the recipient of the text message. Choose from the following:
   - (a name)
   - Number
   - Incoming Calls
   - Outgoing Calls
   - Missed Calls

   For more information about these options, see “Voice commands” in this section.

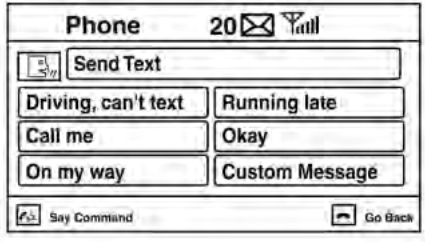

LHA2296

4. Once a recipient is chosen, the system prompts for which message to send. Five predefined messages are available as well as three custom messages. To choose one of the predefined messages, speak one of the following:
   - “Driving, can’t text”
   - “Call me”
   - “On my way”
   - “Running late”
   - “Okay”

To send one of the custom messages, say “Custom Message”. If more than one custom message is stored, the system will prompt for the number of the desired custom message. For more information on setting and managing custom text messages, see “Bluetooth® settings” in this section.

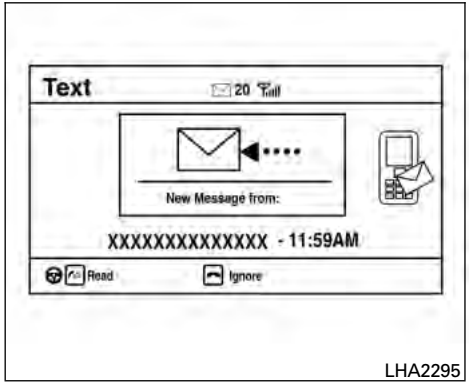

LHA2295

**Reading a received text message:**

1. Press the button.
2. Say “Read Text”.

The text message, sender and delivery time are shown on the screen. Use the tuning switch on the steering wheel to scroll through all text messages if more than one are available. Press the button to exit the text message screen. Press the button to access the following options for replying to the text message:

- Call Back
  Speak this command to call the sender of the text message using the Bluetooth® Hands-Free Phone System.
- Send Text
  Speak this command to send a text message response to the sender of the text message.
- Read Text
  Speak this command to read the text message again.
- Previous Text
  Speak this command to move to the previous text message (if available).
- Next Text
  Speak this command to move to the next text message (if available).

**NOTE:**

**Text messages are only displayed if the vehicle speed is less than 5 mph.**

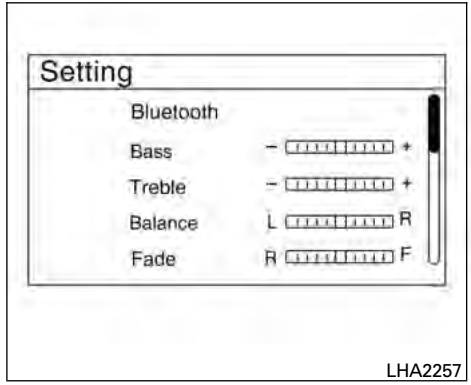

LHA2257

## BLUETOOTH® SETTINGS

To access and adjust the settings for the Bluetooth® Hands-Free Phone System:

1. Press the SETTING button.

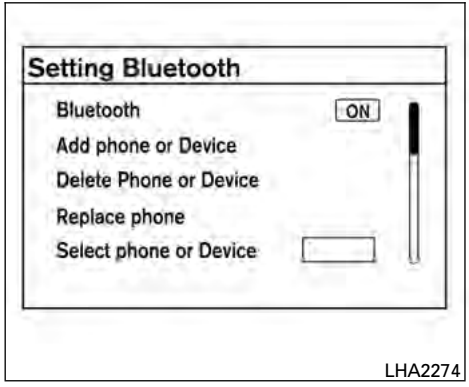


2. Use the TUNE/SCROLL knob to select "Bluetooth" and then press the ENTER button:

- Bluetooth
  Select "On" or "Off" to turn the vehicle's Bluetooth® system on or off.
- Add Phone or Device
  To connect a phone to the system, see "Connecting procedure" in this section.
- Delete Phone or Device
  Select to delete a phone from the displayed list. The system will ask to confirm before deleting the phone.
- Replace Phone
  Select to replace a phone from the displayed list. When a selection is made, the system will ask to confirm before proceeding. The recorded phonebook for the phone being deleted will be saved as long as the new phone's phonebook is the same as the old phone's phonebook.
- Select Phone or Device
  Select to connect to a previously connected phone from the displayed list.
- Show Incoming Calls
  Select "Driver Only" to have incoming call information displayed only in the vehicle information display. Select "Both" to have incoming call information displayed in both the vehicle information display and the center display screen.
- Phonebook Download
  Select to turn on or off the automatic download of a connected phone's phonebook.
- Text Message
  Select to turn on or off the vehicle's text messaging feature.
- New Text Sound
  Select to adjust the volume of the sound that plays when a new text is received by a phone connected to the Bluetooth® Hands-Free Phone System. The setting all the way to the left indicates that the new text sound will be muted.
- Show Incoming Text
  Select "Driver Only" to have incoming text messages displayed only in the vehicle information display. Select "Both" to have incoming text messages displayed in both the vehicle information display and the center display screen. Select "None" to have no display of incoming text messages.
- Edit Custom Messages
  Select to set a custom message that will be available with the standard options when sending a text message. To set a custom message, send a text message to your own phone number while the phone is connected to the system. Three custom messages can be set. Custom messages can only be set while the vehicle is stationary.

- Auto Reply
  Select to turn on or off the Auto Reply function. When enabled, the vehicle will automatically send a predefined text message to the sender when a text message is received while driving.
- Auto Reply Message
  Select to choose the message that is sent when the Auto Reply function is enabled. Choose from "I'm Driving" or one of the three custom messages stored in the system.
- Vehicle Signature On/Off
  Select to choose whether or not the vehicle signature is added to outgoing text messages from the vehicle. This message cannot be changed or customized.

## MANUAL CONTROL

While using the Voice Recognition system, it is possible to select menu options by using the steering wheel controls instead of speaking voice commands. The manual control mode does not allow dialing a phone number by digits. The user may select an entry from the Phonebook or Recent Calls lists. To re-activate Voice Recognition, exit the manual control mode by pressing and holding the PHONE/END ( ) button. At that time, pressing the PHONE/SEND ( ) button will start the Hands Free Phone System.

## BLUETOOTH® HANDS-FREE PHONE SYSTEM WITH NAVIGATION SYSTEM (if so equipped)

**WARNING**

- **Use a phone after stopping your vehicle in a safe location. If you have to use a phone while driving, exercise extreme caution at all times so full attention may be given to vehicle operation.**
- **If you are unable to devote full attention to vehicle operation while talking on the phone, pull off the road to a safe location and stop your vehicle.**

**CAUTION**

**To avoid discharging the vehicle battery, use a phone after starting the engine.**

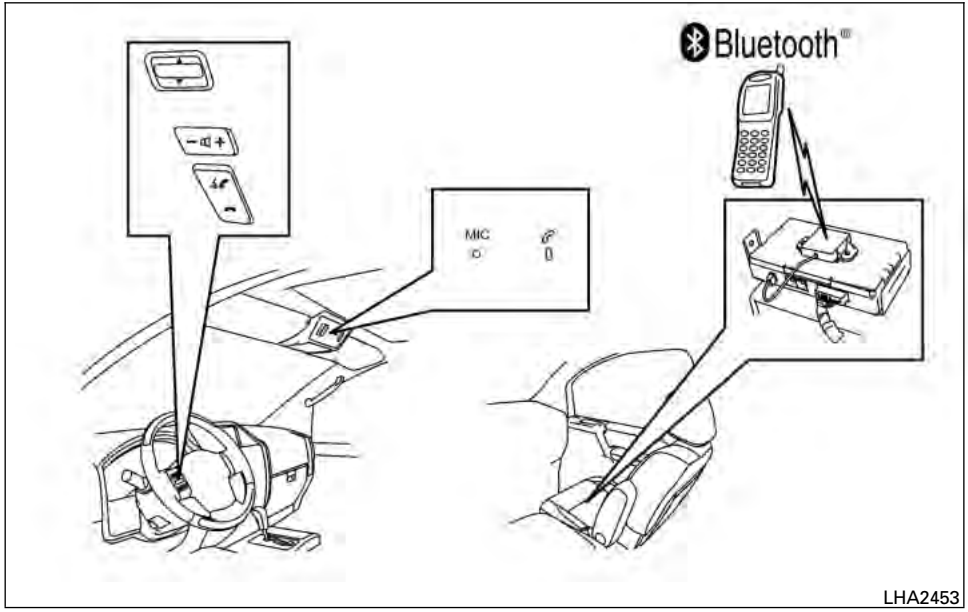


Your NISSAN is equipped with the Bluetooth® Hands-Free Phone System. If you have a compatible Bluetooth® enabled cellular phone, you can set up the wireless connection between your cellular phone and the in-vehicle phone module. With Bluetooth® wireless technology, you can make or receive a hands-free telephone call with your cellular phone in the vehicle.

Once your cellular phone is connected to the in-vehicle phone module, no other phone connecting procedure is required. Your phone is automatically connected with the in-vehicle phone module when the ignition switch is placed in the ON position with the connected cellular phone turned on and carried in the vehicle.

You can register up to 5 different Bluetooth® cellular phones to the in-vehicle phone module. However, you can talk on only one cellular phone at a time.

NISSAN Voice Recognition system supports the phone commands, so dialing a phone number using your voice is possible. For more details, see "NISSAN Voice Recognition System" in this section.

Before using the Bluetooth® Hands-Free Phone System, refer to the following notes.

- Set up the wireless connection between a cellular phone and the in-vehicle phone module before using the hands-free phone system.
- Some Bluetooth® enabled cellular phones may not be recognized by the in-vehicle phone module. Please visit www.nissanusa.com/bluetooth for a recommended phone list and connecting.
- You will not be able to use a hands-free phone under the following conditions:
  - Your vehicle is outside of the cellular service area.

– Your vehicle is in an area where it is difficult to receive cellular signal; such as in a tunnel, in an underground parking garage, near a tall building or in a mountainous area.

– Your cellular phone is locked to prevent it from being dialed.

- When the radio wave condition is not ideal or ambient sound is too loud, it may be difficult to hear the other person's voice during a call.
- Immediately after the ignition switch is placed in the ON position, it may be impossible to receive a call for a short period of time.
- Do not place the cellular phone in an area surrounded by metal or far away from the in-vehicle phone module to prevent tone quality degradation and wireless connection disruption.
- While a cellular phone is connected through the Bluetooth® wireless connection, the battery power of the cellular phone may discharge quicker than usual. The Bluetooth® Hands-Free Phone System cannot charge cellular phones.
- If the hands-free phone system seems to be malfunctioning, see "Troubleshooting guide" in this section. You can also visit www.nissanusa.com/bluetooth for troubleshooting help.
- Some cellular phones or other devices may cause interference or a buzzing noise to come from the audio system speakers. Storing the device in a different location may reduce or eliminate the noise.
- Refer to the cellular phone owner's manual regarding the telephone charges, cellular phone antenna and body, etc.
- The signal strength display on the monitor will not coincide with the signal strength display of some cellular phones.

## REGULATORY INFORMATION

FCC Regulatory information

– CAUTION: To maintain compliance with FCC's RF exposure guidelines, use only the supplied antenna. Unauthorized antenna, modification, or attachments could damage the transmitter and may violate FCC regulations.

– Operation is subject to the following two conditions:

1. This device may not cause interference and
2. this device must accept any interference, including interference that may cause undesired operation of the device.

IC Regulatory information

– Operation is subject to the following two conditions: (1) this device may not cause interference, and (2) this device must accept any interference, including interference that may cause undesired operation of the device.

– This Class B digital apparatus meets all requirements of the Canadian Interference-Causing Equipment Regulations.

Bluetooth®

BLUETOOTH® is a trademark owned by Bluetooth SIG, Inc. and licensed to Bosch.

## VOICE COMMANDS

You can use voice commands to operate various Bluetooth® Hands-Free Phone System features using the NISSAN Voice Recognition system. For more details, see "NISSAN Voice Recognition System" in this section.

## CONNECTING PROCEDURE

1. Press the MENU button on the control panel.

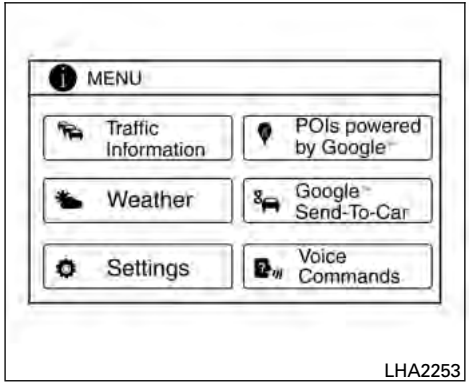


2. Select the “Settings” key.

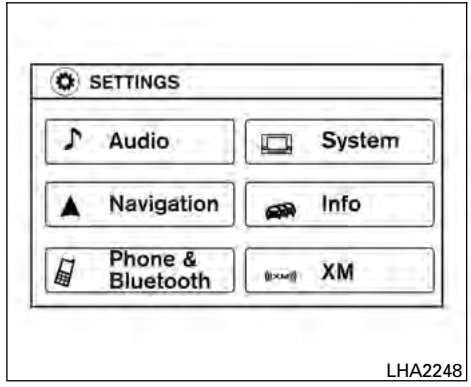


3. Select the “Phone & Bluetooth” key.

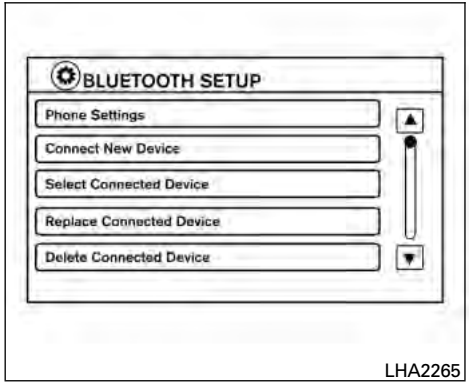

LHA2265

4. Select the “Connect New Device” key.
5. Initiate the connecting process from the handset. The system will display the message: “Is PIN XXXXXX displayed on your Bluetooth device?”. If the PIN is displayed on your Bluetooth® device, select “Yes” to complete the connecting process.

For more information, see the Bluetooth® device’s Owner’s Manual.

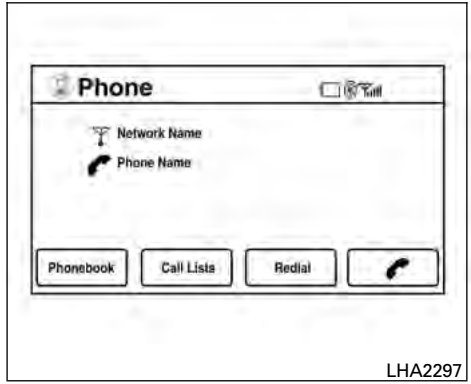

LHA2297

## VEHICLE PHONEBOOK

To access the vehicle phonebook:

1. Press the button on the control panel.
2. Select the “Phonebook” key.

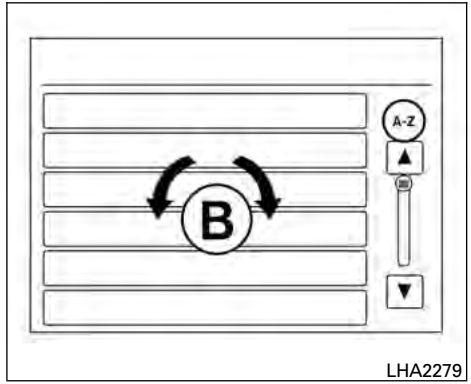

LHA2279

3. Choose the desired entry from the displayed list.

**NOTE:**

**To scroll quickly through the list, touch the “A-Z” key in the upper right corner of the screen. Turn the TUNE/SCROLL knob to choose a letter or number and then press ENTER. The list will move to the first entry that begins with that number or letter.**

4. The number of the entry will be displayed on the screen. Touch the number to initiate dialing.

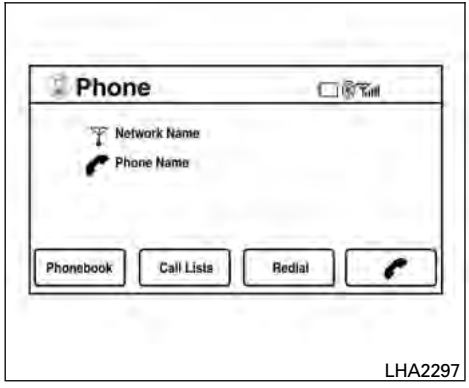

LHA2297

## MAKING A CALL

To make a call, follow the procedure below:

1. Press the button on the instrument panel. The "Phone" screen will appear on the display.
2. Select one of the following options to make a call:

- "Phonebook": Select the name from an entry stored in the vehicle phonebook.
- "Call Lists": Select the name from the incoming, outgoing or missed call history.
- "Redial": Dial the last outgoing call from the vehicle.
- " ": Input the phone number manually using a keypad displayed on the screen. For information on how to use the touchscreen, see "How to use the touchscreen" in this section.

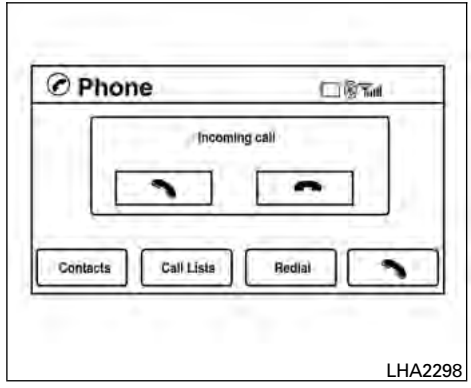

LHA2298

## RECEIVING A CALL

When a call is placed to the connected phone, the display will change to phone mode.

To accept the incoming call, either:

- Press the button on the steering wheel, or
- Touch the green phone icon on the screen.

To reject the incoming call, either:

- Press the button on the steering wheel, or
- Touch the red phone icon on the screen.

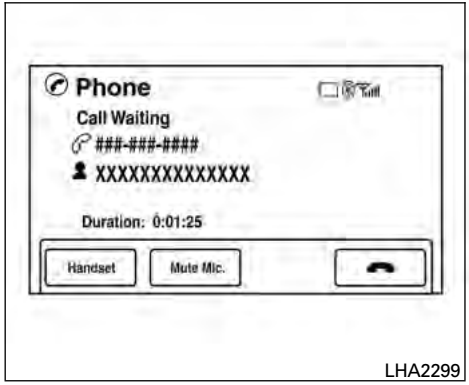

LHA2299

## DURING A CALL

While a call is active, the following options are available on the screen:

- "Handset"
  Select this option to switch control of the phone call over to the handset.
- "Mute Mic."
  Select this option to mute the microphone. Select again to unmute the microphone.
- Red phone ( ) icon
  Select to end the phone call.

## ENDING A CALL

To end a phone call, select the red phone ( ) icon on the screen or press the button on the steering wheel.

LHA2300

## TEXT MESSAGING

**WARNING**

- **Use the text messaging feature after stopping your vehicle in a safe location. If you have to use the feature while driving, exercise extreme caution at all times so full attention may be given to vehicle operation.**
- **If you are unable to devote full attention to vehicle operation while using the text messaging feature, pull off the road to a safe location and stop your vehicle.**

The system allows for the sending and receiving of text messages through the vehicle interface.

**Sending a text message:**

1. Press the button.
2. Say “Send Text”.
3. The system will provide a list of available commands in order to determine the recipient of the text message. Choose from the following:
   - (a name)
   - Number
   - Incoming Calls
   - Outgoing Calls
   - Missed Calls

   For more information about these options, see “Voice commands” in this section.
4. Once a recipient is chosen, the system prompts for which message to send. Five predefined messages are available as well as three custom messages. To choose one of the predefined messages, speak one of the following:
   - “Driving, can’t text”
   - “Call me”
   - “On my way”
   - “Running late”
   - “Okay”

   To send one of the custom messages, say “Custom Messages”. If more than one custom message is stored, the system will prompt for the number of the desired custom message. For more information on setting and managing custom text messages, see “Bluetooth® settings” in this section.

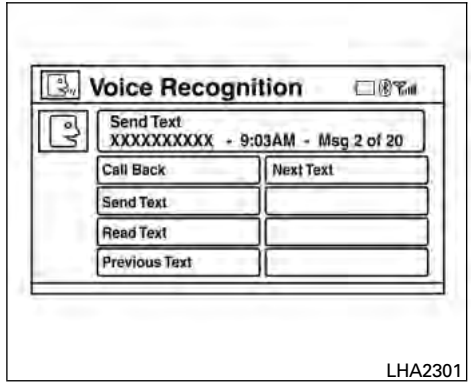


**Reading a received text message:**

1. Press the button.
2. Say “Read Text”.

The text message, sender and delivery time are shown on the screen. Use the tuning switch to scroll through all text messages if more than one are available. Press the button to exit the text message screen. Press the button to access the following options for replying to the text message:

- Call Back
  Speak this command to call the sender of the text message using the Bluetooth® Hands-Free Phone System.
- Send Text
  Speak this command to send a text message response to the sender of the text message.
- Read Text
  Speak this command to read the text message again.
- Previous Text
  Speak this command to move to the previous text message (if available).
- Next Text
  Speak this command to move to the next text message (if available).

**NOTE:**

**Text messages are only displayed if the vehicle speed is less than 5 mph.**

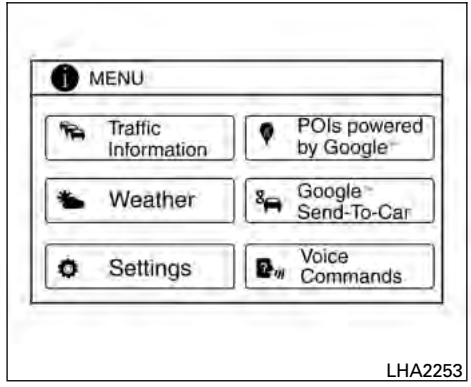

LHA2253

## BLUETOOTH SETTINGS

To access the phone settings:

1. Press the MENU button.
2. Select the “Settings” key.

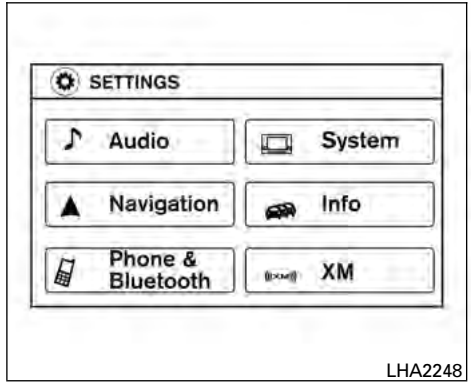

LHA2248

3. Select the “Phone & Bluetooth” key.

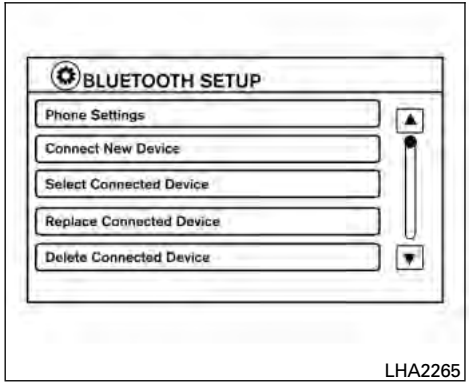


- Phone Settings
  See “Phone settings” in this section for more information.
- Connect New Device
  Select to connect a new Bluetooth® device to the Bluetooth® Hands-Free Phone System.
- Select Connected Device
  Select to choose a Bluetooth® device from a list of those devices connected to the Bluetooth® Hands-Free Phone System.
- Replace Connected Device
  Select to replace a Bluetooth® device from a list of those devices connected to the Bluetooth® Hands-Free Phone System.
- Delete Connected Device
  Select to delete a Bluetooth® device from a list of those devices connected to the Bluetooth® Hands-Free Phone System.
- Bluetooth
  Select to toggle the Bluetooth® on and off.

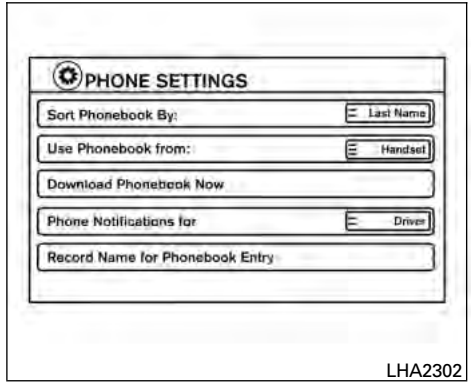


## PHONE SETTINGS

To access the phone settings:

1. Press the MENU button.
2. Select the “Settings” key.
3. Select the “Phone & Bluetooth” key.
4. Select the “Phone Settings” key and adjust the following settings as desired:

- Sort Phonebook By:
  Select “First Name” or “Last Name” to choose how phonebook entries are alphabetically displayed on the screen.

- Use Phonebook From:
  Select “Handset” to use the phone’s phonebook. Select “SIM” to use the phonebook on the SIM card. Select “Both” to use both sources.
- Download Phonebook Now
  Select to download the phonebook to the vehicle from the chosen source.
- Phone Notifications for
  Select “Driver” to have phone notifications shown in the vehicle information display. Select “Both” to have phone notifications shown in both the vehicle information display and the center display screen.
- Record Name for Phonebook Entry
  Select to record a name for a phonebook entry for use with the NISSAN Voice Recognition System.
- Text Message Service
  Select to toggle the text message functionality on or off.
- Show Incoming Text for
  Select “Driver” to have text message notifications shown in the vehicle information display. Select “Both” to have text message notifications shown in both the vehicle information display and the center display screen. Select “None” to have text message notifications not displayed.
- SMS Auto Reply Function
  Select to toggle the SMS auto reply functionality on or off.
- SMS Auto Reply Message
  Select to choose a message that is sent when the auto reply function is activated.
- Add Vehicle’s Signature
  Select to toggle on or off the addition of the vehicle signature to outgoing messages.
- Predefined SMS Messages
  Select the predefined SMS messages that are used by the system.

# NISSAN VOICE RECOGNITION SYSTEM (if so equipped)

The NISSAN Voice Recognition system allows hands-free operation of the systems equipped on this vehicle, such as the phone and navigation systems.

To operate NISSAN Voice Recognition, press the button located on the steering wheel. When prompted, speak the command for the system you wish to activate. The command given is picked up by the microphone and performed when it is properly recognized. NISSAN Voice Recognition will provide a voice response as well as a message in the center display to inform you of the command results.

## USING THE SYSTEM

### Initialization

When the ignition switch is in the ON position, NISSAN Voice Recognition is initialized, which takes a few seconds. When completed, the system is ready to accept voice commands. If the button is pressed before the initialization completes, the system will announce: “Voice Recognition System not ready. Please wait.”

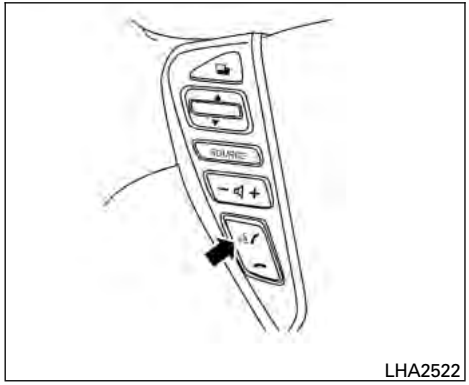


LHA2522

## Giving voice commands

1. Press the button.
2. The system announces: “Please say a command.” A list of available commands is spoken by the system.
3. After the tone sounds and the face icon on the display changes, speak a command. Available commands are discussed later in this section.
4. Voice and display feedback are provided when the command is accepted.

- If the command is not recognized, the system announces: “Command not recognized.” Repeat the command in a clear voice.
- If you want to cancel the command or go back to the previous menu of commands, press the button. The system will announce: “Voice recognition canceled” or “Go back” depending on the current menu level.
- Press the BACK button on the control panel to move back through the menus displayed on the screen.
- If you want to adjust the volume of the voice feedback, use the volume control switches on the steering wheel or the volume knob on the control panel.

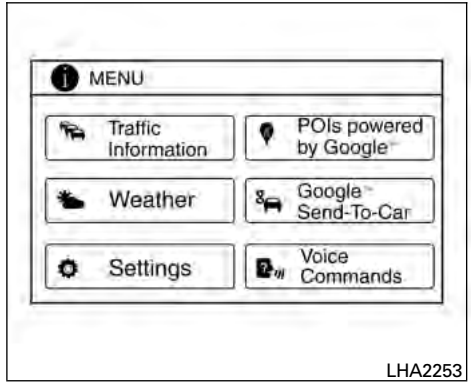


LHA2253

- The voice command screen can also be accessed using the control panel display:

1. Press the MENU button.
2. Select the “Voice Commands” key.

## Operating tips

To get the best performance out of NISSAN Voice Recognition, observe the following:

- Keep the interior of the vehicle as quiet as possible. Close the windows to eliminate the surrounding noises (traffic noises, vibration sounds, etc.), which may prevent the system from recognizing the voice commands correctly.

- Wait until a tone sounds before speaking a command. Otherwise, the command will not be received properly.
- Start speaking a command within 3.5 seconds after the tone sounds.
- Speak in a natural voice without pausing between words.

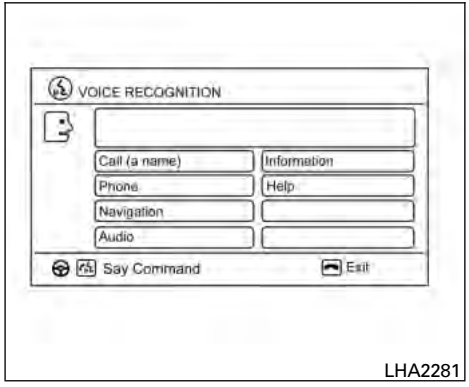

LHA2281

## SYSTEM FEATURES

NISSAN Voice Recognition can activate the following systems:

- Bluetooth Hands-Free Phone System
- Navigation
- Audio
- Information

For additional information on the navigation system, see the separate Navigation System Owner's Manual.

## How to say numbers

NISSAN Voice Recognition requires a certain way to speak numbers in voice commands. Refer to the following examples.

General rule: Either "zero" or "oh" can be used for "0".

### Phone numbers

Speak phone numbers according to the following example. For 1-800-662-6200, say dial number and then speak the phone number in any of the following formats:

- "one eight oh oh six six two six two oh oh"
- "one eight hundred six six two six two oh oh"
- "one eight zero zero six six two six two oh oh"

For the best voice recognition phone dialing results, say phone numbers as single digits. Also, full numbers can only be spoken for "800". For example, you cannot say 555-6000 as "five five five six thousand".

## BLUETOOTH® HANDS-FREE PHONE SYSTEM VOICE COMMANDS

To access the Bluetooth® Hands-Free Phone System voice commands:

1. Press the button.
2. Say “Call” and then a name in the vehicle phonebook to call that entry. Otherwise, say “Phone” to access various phone commands.

If the Bluetooth® has been set to “Off”, the system announces: “Bluetooth® is off. Would you like to turn Bluetooth® on?”

If no phone is connected to the system and the vehicle is stationary, the system announces: “There is no phone connected. Would you like to connect a phone now?” Say “Yes” to connect a phone. All further Bluetooth® Hands-Free Phone System voice commands are only available if a phone is connected.

If a phone is connected and Bluetooth® is set to “On”, the following voice commands are available:

- Dial Number

  Allows for up to 24 digits to be dialed. After the number is entered, say “Dial” to initiate dialing. Say “Correction” to correct the number entered. Say “Go Back” to return to the main menu.

- List Phonebook

  Starting with the first alphabetical entry in the vehicle phonebook, the system prompts for an additional command. Say “Dial” to call the number of the phonebook entry. Say “Send Text” to send a text message to the number of the phonebook entry. Say “Next Entry” to skip to the next alphabetical entry in the vehicle phonebook, where the same options will then be available.

- Recent Calls

  The system prompts for an additional command. Say “Missed Calls”, “Incoming Calls” or “Outgoing Calls” to display a list of such calls on the screen.

  Speak the number of the entry displayed on the screen to dial that number or say “Next Page” to view entries on the next page (if available).

- Redial

  Redials the last called number.

- Read Text

  Reads an incoming text message. For more information about text messaging with the Bluetooth® Hands-Free Phone System, see “Bluetooth® Hands-Free Phone System with Navigation System” in this section.

- Send Text

  Sends a text message. For more information about text messaging with the Bluetooth® Hands-Free Phone System, see “Bluetooth® Hands-Free Phone System with Navigation System” in this section.

- Select Phone

  The system replies “Please use manual controls to continue”. Use manual controls to change the active phone from among the listed phones connected to the vehicle.

For more information about the Bluetooth® Hands-Free Phone System, see “Bluetooth® Hands-Free Phone System with Navigation System” in this section.

## NAVIGATION SYSTEM VOICE COMMANDS

The following voice commands are available for the Navigation System:

- Places
- Street Address

- Address Book
- Home
- Previous Destination

For more information about these commands, see the separate Navigation System Owner's Manual.

## AUDIO SYSTEM VOICE COMMANDS

To access the audio system voice commands:

1. Press the button.
2. Say "Audio"
3. Speak a command from the following available commands:

- FM

  Switches the audio system to the FM mode.

- AM

  Switches the audio system to the AM mode.

- XM (satellite radio, if so equipped)

  Switches the audio system to the SiriusXM Satellite Radio mode.

- CD

  Switches the audio system to the CD mode. A CD must be inserted for this command to be functional.

- iPod®

  Switches the audio system to the iPod® mode. An iPod® must be connected for this command to be available and functional.

  The following sub-commands are available for iPod®:

  – Now Playing
  – Menu
  – Playlists
  – Artists
  – Albums
  – Genres
  – Songs
  – Shuffle Songs*
  – Composers*
  – Audiobooks*
  – Podcasts*

  * Say "Next Page" to access these commands. Say "Previous Page" to return to the first page of commands.

- USB

  Switches the audio system to the USB mode. A USB device must be inserted for this command to be available and functional.

- Pandora®

  Switches the audio system to the Pandora® audio mode. A compatible Bluetooth® audio device with a Pandora® application must be connected to the system for this command to be functional.

- Bluetooth®

  Switches the audio system to the Bluetooth® audio mode. A compatible Bluetooth® audio device must be connected to the system for this command to be functional.

- AUX

  Switches the audio system to the AUX mode. An AUX device must be connected for this command to be functional.

For more information about the audio system, see "Audio system" in this section.

## INFORMATION VOICE COMMANDS

The following voice commands are available for the information functions of the Navigation System:

- Traffic
- Current Weather
- Weather Forecast
- Google™ Send-To-Car
- POIs Powered by Google™

For more information about these commands, see the separate Navigation System Owner's Manual.

## HELP VOICE COMMANDS

The following voice commands can be spoken to have the system provide instructions and tips for using the NISSAN Voice Recognition system.

- List Commands
- What Can I Say?
- General Help
- Quit
- Exit

## TROUBLESHOOTING GUIDE

The system should respond correctly to all voice commands without difficulty. If problems are encountered, follow the solutions given in this guide for the appropriate error. Where the solutions are listed by number, try each solution in turn, starting with number one, until the problem is resolved.

| Symptom/error message | Solution |
|---|---|
| The system responds “Command Not Recognized” or the system fails to recognize the command correctly. | 1. Ensure that the command format is valid. Use the “List Commands” or “What Can I Say?” command under the “Help” menu. |
| | 2. Speak clearly without pausing between words and at a level appropriate to the ambient noise level. |
| | 3. Ensure that the ambient noise level is not excessive (for example, with the windows open or the defroster on).<br>**NOTE:**<br>**If it is too noisy to use the phone, it is likely that voice commands will not be recognized.** |
| | 4. If optional words of the command have been omitted, then the command should be tried with these in place. |

## MEMO

# 5 Starting and driving


Precautions when starting and driving . . . . . 5-2
Exhaust gas (carbon monoxide) . . . . . 5-2
Three-way catalyst . . . . . 5-2
On-pavement and off-road driving precautions . . . . . 5-3
Tire Pressure Monitoring System (TPMS) . . . . . 5-3
Avoiding collision and rollover . . . . . 5-6
Off-road recovery . . . . . 5-6
Rapid air pressure loss . . . . . 5-6
Drinking alcohol/drugs and driving . . . . . 5-7
Driving safety precautions . . . . . 5-7
Ignition switch . . . . . 5-9
Automatic transmission . . . . . 5-10
Ignition switch positions . . . . . 5-11
NISSAN Vehicle Immobilizer System (if so equipped) . . . . . 5-11
Before starting the engine . . . . . 5-11
Starting the engine . . . . . 5-12
Driving the vehicle . . . . . 5-13
Engine protection mode . . . . . 5-13
Automatic transmission . . . . . 5-14
Parking brake . . . . . 5-20
Cruise control (if so equipped) . . . . . 5-21
Precautions on cruise control . . . . . 5-21
Cruise control operations . . . . . 5-21
Break-in schedule . . . . . 5-22
Increasing fuel economy . . . . . 5-23
4x4 Using four wheel drive (4WD) (if so equipped) . . . . . 5-23
Transfer case shifting procedures . . . . . 5-24
Electronic locking rear differential (E-Lock) system (if so equipped) . . . . . 5-29
Parking/parking on hills . . . . . 5-31
Power steering . . . . . 5-32
Brake system . . . . . 5-32
Brake precautions . . . . . 5-32
Anti-lock Braking System (ABS) . . . . . 5-33
Active brake limited slip (ABLS) system . . . . . 5-34
Vehicle Dynamic Control (VDC) system . . . . . 5-35
Rear sonar system (if so equipped) . . . . . 5-36
Cold weather driving . . . . . 5-37
Freeing a frozen door lock . . . . . 5-37
Anti-freeze . . . . . 5-37
Battery . . . . . 5-37
Draining of coolant water . . . . . 5-38
Tire equipment . . . . . 5-38
Special winter equipment . . . . . 5-38
Driving on snow or ice . . . . . 5-38
Engine block heater (if so equipped) . . . . . 5-39

**⚠WARNING**

- **Do not leave children or adults who would normally require the assistance of others alone in your vehicle. Pets should also not be left alone. They could accidentally injure themselves or others through inadvertent operation of the vehicle. Also, on hot, sunny days, temperatures in a closed vehicle could quickly become high enough to cause severe or possibly fatal injuries to people or animals.**
- **Properly secure all cargo with ropes or straps to help prevent it from sliding or shifting. Do not place cargo higher than the seatbacks. In a sudden stop or collision, unsecured cargo could cause personal injury.**

## EXHAUST GAS (carbon monoxide)

**⚠WARNING**

- **Do not breathe exhaust gases; they contain colorless and odorless carbon monoxide. Carbon monoxide is dangerous. It can cause unconsciousness or death.**
- **If you suspect that exhaust fumes are entering the vehicle, drive with all windows fully open, and have the vehicle inspected immediately.**
- **Do not run the engine in closed spaces such as a garage.**
- **Do not park the vehicle with the engine running for any extended length of time.**
- **Keep the rear vent windows, liftgates, doors and trunk lids (if so equipped) closed while driving, otherwise exhaust gases could be drawn into the passenger compartment. If you must drive with one of these open, follow these precautions:**
  1. **Open all the windows.**
  2. **Set the air recirculation button to off and the fan control dial to high to circulate the air.**
- **If electrical wiring or other cable connections must pass to a trailer through the seal on the lift gate or the body, follow the manufacturer's recommendation to prevent carbon monoxide entry into the vehicle.**
- **The exhaust system and body should be inspected by a qualified mechanic whenever:**
  a. **The vehicle is raised for service.**
  b. **You suspect that exhaust fumes are entering into the passenger compartment.**
  c. **You notice a change in the sound of the exhaust system.**
  d. **You have had an accident involving damage to the exhaust system, underbody, or rear of the vehicle.**

## THREE-WAY CATALYST

The three-way catalyst is an emission control device installed in the exhaust system. Exhaust gases in the three-way catalyst are burned at high temperatures to help reduce pollutants.

**⚠WARNING**

- **The exhaust gas and the exhaust system are very hot. Keep people, animals or flammable materials away from the exhaust system components.**

- **Do not stop or park the vehicle over flammable materials such as dry grass, waste paper or rags. They may ignite and cause a fire.**

**⚠ CAUTION**

- **Do not use leaded gasoline. Deposits from leaded gasoline will seriously reduce the three-way catalyst's ability to help reduce exhaust pollutants.**
- **Keep your engine tuned up. Malfunctions in the ignition, fuel injection, or electrical systems can cause overrich fuel flow into the three-way catalyst, causing it to overheat. Do not keep driving if the engine misfires, or if noticeable loss of performance or other unusual operating conditions are detected. Have the vehicle inspected promptly by a NISSAN dealer.**
- **Avoid driving with an extremely low fuel level. Running out of fuel could cause the engine to misfire, damaging the three-way catalyst.**
- **Do not race the engine while warming it up.**
- **Do not push or tow your vehicle to start the engine.**

## ON-PAVEMENT AND OFF-ROAD DRIVING PRECAUTIONS

**Utility vehicles have a significantly higher rollover rate than other types of vehicles.**

They have higher ground clearance than passenger cars to make them capable of performing in a variety of on-pavement and off-road applications. This gives them a higher center of gravity than ordinary cars. An advantage of higher ground clearance is a better view of the road, allowing you to anticipate problems. However, they are not designed for cornering at the same speeds as conventional two-wheel drive vehicles any more than low-slung sports cars are designed to perform satisfactorily under off-road conditions. If at all possible, avoid sharp turns at high speeds. As with other vehicles of this type, failure to operate this vehicle correctly may result in loss of control or vehicle rollover. In a rollover crash, an unbelted person is significantly more likely to die than a person wearing a seat belt.

Be sure to read the driving safety precautions later in this section.

## TIRE PRESSURE MONITORING SYSTEM (TPMS)

Each tire, including the spare (if provided), should be checked monthly when cold and inflated to the inflation pressure recommended by the vehicle manufacturer on the vehicle placard or tire inflation pressure label. (If your vehicle has tires of a different size than the size indicated on the vehicle placard or tire inflation pressure label, you should determine the proper tire inflation pressure for those tires.)

As an added safety feature, your vehicle has been equipped with a Tire Pressure Monitoring System (TPMS) that illuminates a low tire pressure telltale when one or more of your tires is significantly under-inflated. Accordingly, when the low tire pressure telltale illuminates, you should stop and check your tires as soon as possible, and inflate them to the proper pressure. Driving on a significantly under-inflated tire causes the tire to overheat and can lead to tire failure. Under-inflation also reduces fuel efficiency and tire tread life, and may affect the vehicle's handling and stopping ability.

Please note that the TPMS is not a substitute for proper tire maintenance, and it is the driver's responsibility to maintain correct tire pressure, even if under-inflation has not reached the level to trigger illumination of the TPMS low tire pressure telltale.

Your vehicle has also been equipped with a TPMS malfunction indicator to indicate when the system is not operating properly. The TPMS malfunction indicator is combined with the low tire pressure telltale. When the system detects a malfunction, the telltale will flash for approximately one minute and then remain continuously illuminated. This sequence will continue upon subsequent vehicle start-ups as long as the malfunction exists. When the malfunction indicator is illuminated, the system may not be able to detect or signal low tire pressure as intended. TPMS malfunctions may occur for a variety of reasons, including the installation of replacement or alternate tires or wheels on the vehicle that prevent the TPMS from functioning properly. Always check the TPMS malfunction telltale after replacing one or more tires or wheels on your vehicle to ensure that the replacement or alternate tires and wheels allow the TPMS to continue to function properly.

**Additional information:**

- **The TPMS does not monitor the tire pressure of the spare tire.**
- The TPMS will activate only when the vehicle is driven at speeds above 16 MPH (25 km/h). Also, this system may not detect a sudden drop in tire pressure (for example a flat tire while driving).
- The low tire pressure warning light does not automatically turn off when the tire pressure is adjusted. After your tires are inflated to the recommended pressure, the vehicle must be driven at speeds above 16 MPH (25 km/h) to activate the TPMS and turn off the low tire pressure warning light. Use a tire pressure gauge to check the tire pressure.
- The CHECK TIRE PRESSURE warning appears in the vehicle information display when the low tire pressure warning light is illuminated and low tire pressure is detected. The CHECK TIRE PRESSURE warning turns off when the low tire pressure warning light turns off.
- The CHECK TIRE PRESSURE warning does not appear if the low tire pressure warning light illuminates to indicate a TPMS malfunction.
- Tire pressure rises and falls depending on the heat caused by the vehicle's operation and the outside temperature. Low outside temperature can lower the temperature of the air inside the tire which can cause a lower tire inflation pressure. This may cause the low tire pressure warning light to illuminate. If the warning light illuminates in low ambient temperature, check the tire pressure for all four tires.
- You can also check the pressure of all tires (except the spare tire) on the display screen. The order of the tire pressure figures displayed on the screen does not correspond with the actual order of the tire position. See "Tire pressure information" in the "Display screen, heater, air conditioner, audio and phone systems" section.
- The Tire and Loading Information label (also referred to as the vehicle placard or tire inflation pressure label) is located in the driver's door opening.

For additional information, see "Low tire pressure warning light" in the "Instruments and controls" section, "Tire Pressure Monitoring System (TPMS)" in the "In case of emergency" section.

**⚠WARNING**

- **If the low tire pressure warning light illuminates while driving, avoid sudden steering maneuvers or abrupt braking, reduce vehicle speed, pull off the road to a safe location and stop the vehicle as soon as possible. Driving with underinflated tires may permanently damage the tires and increase the likelihood of tire failure. Serious vehicle damage could occur and may lead to an accident and could result in serious personal injury. Check the tire pressure for all four tires. Adjust the tire pressure to the recommended COLD tire pressure shown on the Tire and Loading Information label to turn the low tire pressure warning light OFF. If you have a flat tire, replace it with a spare tire as soon as possible. (See "Flat tire" in the "In case of emergency" section for changing a flat tire.)**
- **When a spare tire is mounted or a wheel is replaced, tire pressure will not be indicated, the TPMS will not function and the low tire pressure warning light will flash for approximately 1 minute. The light will remain on after 1 minute. Contact your NISSAN dealer as soon as possible for tire replacement and/or system resetting.**
- **Replacing tires with those not originally specified by NISSAN could affect the proper operation of the TPMS.**
- **Do not inject any tire liquid or aerosol tire sealant into the tires, as this may cause a malfunction of the tire pressure sensors.**

**⚠CAUTION**

**Do not place metalized film or any metal parts (antenna, etc.) on the windows. This may cause poor reception of the signals from the tire pressure sensors, and the TPMS will not function properly.**

Some devices and transmitters may temporarily interfere with the operation of the TPMS and cause the low tire pressure warning light to illuminate.

Some examples are:

– Facilities or electric devices using similar radio frequencies are near the vehicle.

– If a transmitter set to similar frequencies is being used in or near the vehicle.

– If a computer (or similar equipment) or a DC/AC converter is being used in or near the vehicle.

**FCC Notice:**

**For USA:**

**This device complies with Part 15 of the FCC Rules. Operation is subject to the following two conditions:**

1. **This device may not cause harmful interference, and**
2. **This device must accept any interference received, including interference that may cause undesired operation. Note: Changes or modification not expressly approved by the party responsible for compliance could void the user's authority to operate the equipment.**

**For Canada:**

**This device complies with RSS-210 of Industry Canada. Operation is subject to the following two conditions:**

1. **This device may not cause interference, and**
2. **This device must accept any interference, include interference that may cause undesired operation of the device.**
3. **The term "IC:" before the radio certification number only signifies that Industry Canada technical specifications were met.**

## AVOIDING COLLISION AND ROLLOVER

**⚠WARNING**

**Failure to operate this vehicle in a safe and prudent manner may result in loss of control or an accident.**

Be alert and drive defensively at all times. Obey all traffic regulations. Avoid excessive speed, high speed cornering, or sudden steering maneuvers, because these driving practices could cause you to lose control of your vehicle. **As with any vehicle, loss of control could result in a collision with other vehicles or objects or cause the vehicle to roll over, particularly if the loss of control causes the vehicle to slide sideways.** Be attentive at all times, and avoid driving when tired. Never drive when under the influence of alcohol or drugs (including prescription or over-the-counter drugs which may cause drowsiness). Always wear your seat belt as outlined in the "Safety – Seats, seat belts and supplemental restraint system" section of this manual, and also instruct your passengers to do so.

Seat belts help reduce the risk of injury in collisions and rollovers. **In a rollover crash, an unbelted or improperly belted person is significantly more likely to be injured or killed than a person properly wearing a seat belt.**

## OFF-ROAD RECOVERY

If the right side or left side wheels unintentionally leave the road surface, maintain control of the vehicle by following the procedure below. Please note that this procedure is only a general guide. The vehicle must be driven as appropriate based on the conditions of the vehicle, road and traffic.

1. Remain calm and do not overreact.
2. Do not apply the brakes.
3. Maintain a firm grip on the steering wheel with both hands and try to hold a straight course.
4. When appropriate, slowly release the accelerator pedal to gradually slow the vehicle.
5. If there is nothing in the way, steer the vehicle to follow the road while vehicle speed is reduced. Do not attempt to drive the vehicle back onto the road surface until vehicle speed is reduced.
6. When it is safe to do so, gradually turn the steering wheel until both tires return to the road surface. When all tires are on the road surface, steer the vehicle to stay in the appropriate driving lane.

- If you decide that it is not safe to return the vehicle to the road surface based on vehicle, road or traffic conditions, gradually slow the vehicle to a stop in a safe place off the road.

## RAPID AIR PRESSURE LOSS

Rapid air pressure loss or a "blow-out" can occur if the tire is punctured or is damaged due to hitting a curb or pothole. Rapid air pressure loss can also be caused by driving on under-inflated tires.

Rapid air pressure loss can affect the handling and stability of the vehicle, especially at highway speeds.

Help prevent rapid air pressure loss by maintaining the correct air pressure and visually inspect the tires for wear and damage. See “Wheels and tires” in the “Maintenance and do-it-yourself” section of this manual. If a tire rapidly loses air pressure or “blows-out” while driving, maintain control of the vehicle by following the procedure below. Please note that this procedure is only a general guide. The vehicle must be driven as appropriate based on the conditions of the vehicle, road and traffic.

**⚠WARNING**

**The following actions can increase the chance of losing control of the vehicle if there is a sudden loss of tire air pressure. Losing control of the vehicle may cause a collision and result in personal injury.**

- **The vehicle generally moves or pulls in the direction of the flat tire.**
- **Do not rapidly apply the brakes.**
- **Do not rapidly release the accelerator pedal.**
- **Do not rapidly turn the steering wheel.**

1. Remain calm and do not over react.
2. Maintain a firm grip on the steering wheel with both hands and try to hold a straight course.
3. When appropriate, slowly release the accelerator pedal to gradually slow the vehicle.
4. Gradually steer the vehicle to a safe location off the road and away from traffic if possible.
5. Lightly apply the brake pedal to gradually stop the vehicle.
6. Turn on the hazard warning flashers and either contact a roadside emergency service to change the tire or see “Changing a flat tire” in the “In case of emergency” section of this manual.

## DRINKING ALCOHOL/DRUGS AND DRIVING

**⚠WARNING**

**Never drive under the influence of alcohol or drugs. Alcohol in the bloodstream reduces coordination, delays reaction time and impairs judgement. Driving after drinking alcohol increases the likelihood of being involved in an accident injuring yourself and others. Additionally, if you are injured in an accident, alcohol can increase the severity of the injury.**

NISSAN is committed to safe driving. However, you must choose not to drive under the influence of alcohol. Every year thousands of people are injured or killed in alcohol-related accidents. Although the local laws vary on what is considered to be legally intoxicated, the fact is that alcohol affects all people differently and most people underestimate the effects of alcohol.

Remember, drinking and driving don’t mix! And that is true for drugs, too (over-the-counter, prescription, and illegal drugs). Don’t drive if your ability to operate your vehicle is impaired by alcohol, drugs, or some other physical condition.

## DRIVING SAFETY PRECAUTIONS

Your NISSAN is designed for both normal and off-road use. However, avoid driving in deep water or mud as your NISSAN is mainly designed for leisure use, unlike a conventional off-road vehicle.

Remember that two-wheel drive models are less capable than four-wheel drive models for rough road driving and extrication when stuck in deep snow or mud, or the like.

Please observe the following precautions:

**⚠WARNING**

- **Drive carefully when off the road and avoid dangerous areas. Every person who drives or rides in this vehicle should be seated with their seat belt fastened. This will keep you and your passengers in position when driving over rough terrain.**
- **Do not drive across steep slopes. Instead drive either straight up or straight down the slopes. Off-road vehicles can tip over sideways much more easily than they can forward or backward.**
- **Many hills are too steep for any vehicle. If you drive up them, you may stall. If you drive down them, you may not be able to control your speed. If you drive across them, you may roll over.**
- **Do not shift gears while driving on downhill grades as this could cause loss of control of the vehicle.**
- **Stay alert when driving to the top of a hill. At the top there could be a drop-off or other hazard that could cause an accident.**
- **If your engine stalls or you cannot make it to the top of a steep hill, never attempt to turn around. Your vehicle could tip or roll over. Always back straight down in R (Reverse) gear and apply brakes to control your speed.**
- **Heavy braking going down a hill could cause your brakes to overheat and fade, resulting in loss of control and an accident. Apply brakes lightly and use a low gear to control your speed.**
- **Unsecured cargo can be thrown around when driving over rough terrain. Properly secure all cargo so it will not be thrown forward and cause injury to you or your passengers.**
- **Secure heavy loads in the cargo area as far forward and as low as possible. Do not equip the vehicle with tires larger than specified in this manual. This could cause your vehicle to roll over**
- **Do not grip the inside or spokes of the steering wheel when driving off-road. The steering wheel could move suddenly and injure your hands. Instead drive with your fingers and thumbs on the outside of the rim.**
- **Before operating the vehicle, ensure that the driver and all passengers have their seat belts fastened.**
- **Lower your speed when encountering strong crosswinds. With a higher center of gravity, your NISSAN is more affected by strong side winds. Slower speeds ensure better vehicle control.**
- **Do not drive beyond the performance capability of the tires, even with 4WD engaged.**
- **For 4WD equipped vehicles, do not attempt to raise two wheels off the ground and shift the transmission to any drive or reverse position with the engine running. Doing so may result in drivetrain damage or unexpected vehicle movement which could result in serious vehicle damage or personal injury.**

- **Do not attempt to test a 4WD equipped vehicle on a 2-wheel dynamometer (such as the dynamometers used by some states for emissions testing), or similar equipment even if the other two wheels are raised off the ground. Make sure you inform test facility personnel that your vehicle is equipped with 4WD before it is placed on a dynamometer. Using the wrong test equipment may result in drivetrain damage or unexpected vehicle movement which could result in serious vehicle damage or personal injury.**
- **Accelerating quickly, sharp steering maneuvers or sudden braking may cause loss of control.**
- **If at all possible, avoid sharp turning maneuvers, particularly at high speeds. Your NISSAN four-wheel drive vehicle has a higher center of gravity than a passenger car. The vehicle is not designed for cornering at the same speeds as passenger cars. Failure to operate this vehicle correctly could result in loss of control and/or a rollover accident.**
- **Always use tires of the same type, size, brand, construction (bias, bias-belted, or radial), and tread pattern on all four wheels. Install tire chains on the rear wheels when driving on slippery roads and drive carefully.**
- **Be sure to check the brakes immediately after driving in mud or water. See "Brake system" later in this section for "Wet brakes".**
- **Avoid parking your vehicle on steep hills. If you get out of the vehicle and it rolls forward, backward or sideways, you could be injured.**
- **Whenever you drive off-road through sand, mud or water as deep as the wheel hub, more frequent maintenance may be required. See "Periodic maintenance" in the "NISSAN Service and Maintenance Guide."**

**⚠ WARNING**

- **Never remove the ignition key or place the ignition switch in the LOCK position while driving. The steering wheel will lock (for models without NISSAN vehicle immobilizer system). This may cause the driver to lose control of the vehicle and could result in serious vehicle damage or personal injury.**

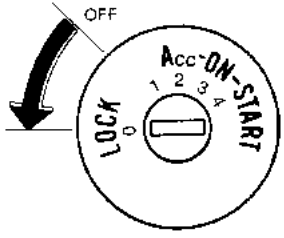

WSD0041

## AUTOMATIC TRANSMISSION

The ignition lock is designed so the ignition switch cannot be placed in the LOCK position and the key cannot be removed until the shift selector is moved to the P (Park) position.

When removing the key from the ignition switch, make sure the shift selector is in the P (Park) position.

If the shift selector is not returned to P (Park) position, the ignition switch cannot be placed in the LOCK position.

To remove the key from the ignition switch:

1. Shift the shift selector to the P (Park) position with the ignition switch in the ON position.
2. Place the ignition switch in the LOCK position.
3. Remove the key from the ignition switch.

If the shift selector is shifted to the P (Park) position after the ignition switch is placed in the OFF position or when the ignition switch cannot be placed in the LOCK position, proceed as follows to remove the key.

1. Move the shift selector into the P (Park) position.
2. Place the ignition switch slightly toward the ON position.
3. Place the ignition switch in the LOCK position.
4. Remove the key.

The shift selector is designed so it cannot move out of P (Park) and into any of the other gear positions if the ignition switch is placed in the OFF position or if the key is removed from the switch.

**The shift selector can be moved if the ignition switch is in the ON position and the foot brake pedal is depressed.**

**There is an OFF position between the LOCK and ON positions. The OFF position is indicated by a “1” on the ignition switch. For models without NISSAN vehicle immobilizer system: when the ignition switch is in the OFF position, the steering wheel is not locked.**

In order for the steering wheel to be locked, it must be turned about 1/8 of a turn clockwise from the straight up position.

**To lock the steering wheel, turn the ignition to the LOCK position. Remove the key. To unlock the steering wheel, insert the key and turn it gently while rotating the steering wheel slightly right and left.**

**If the key will not turn from the LOCK position, turn the steering wheel to the left or right while turning the key to unlock the key cylinder.**

## IGNITION SWITCH POSITIONS

LOCK: Normal parking position (0)

OFF: (1)

The engine can be turned off without locking the steering wheel.

ACC: (Accessories) (2)

This position activates electrical accessories such as the radio when the engine is not running.

ON: Normal operating position (3)

This position turns on the ignition system and the electrical accessories.

START: (4)

This position starts the engine. As soon as the engine has started, release the key. It automatically returns to the ON position.

## NISSAN VEHICLE IMMOBILIZER SYSTEM (if so equipped)

The NISSAN Vehicle Immobilizer System will not allow the engine to start without the use of the registered key.

If the engine fails to start using a registered key (for example, when interference is caused by another registered key, an automated toll road device or automatic payment device on the key ring), restart the engine using the following procedures:

1. Leave the ignition switch in the ON position for approximately 5 seconds.
2. Turn the ignition switch to the OFF or LOCK position, and wait approximately 10 seconds.
3. Repeat steps 1 and 2.
4. Restart the engine while holding the device (which may have caused the interference) separate from the registered key.

If the no start condition re-occurs, NISSAN recommends placing the registered key on a separate key ring to avoid interference from other devices.

- Make sure the area around the vehicle is clear.
- Check fluid levels such as engine oil, coolant, brake fluid, and windshield-washer fluid as frequently as possible, or at least whenever you refuel.
- Check that all windows and lights are clean.
- Visually inspect tires for their appearance and condition. Also check tires for proper inflation.
- Check that all doors are closed.
- Position seat and adjust head restraints.
- Adjust inside and outside mirrors.
- Fasten seat belts and ask all passengers to do likewise.
- Check the operation of warning lights when the ignition switch is placed in the ON position. See “Warning/indicator lights and audible reminders” in the “Instruments and controls” section of this manual.

1. Apply the parking brake.
2. Move the shift selector to P (Park) or N (Neutral). P (Park) is recommended.

   **The shift selector cannot be moved out of P (Park) and into any of the other gear positions if the ignition switch is turned to the OFF position or if the key is removed from the ignition switch.**

   **The starter is designed not to operate if the shift selector is in any of the driving positions.**
3. Crank the engine **with your foot off the accelerator pedal** by placing the ignition switch in the START position. Release the key when the engine starts. If the engine starts, but fails to run, repeat the above procedure.
   - If the engine is very hard to start in extremely cold weather or when restarting, depress the accelerator pedal a little (approximately 1/3 to the floor) and hold it and then crank the engine. Release the key and the accelerator pedal when the engine starts.
   - If the engine is very hard to start because it is flooded, depress the accelerator pedal all the way to the floor and hold it. Crank the engine for 5 to 6 seconds. After cranking the engine, release the accelerator pedal. Crank the engine **with your foot off the accelerator pedal** by turning the ignition key to START. Release the key when the engine starts. If the engine starts, but fails to run, repeat the above procedure.

**⚠CAUTION**

**Do not operate the starter for more than 15 seconds at a time. If the engine does not start, turn the key off and wait 10 seconds before cranking again, otherwise the starter could be damaged.**

4. Allow the engine to idle for at least 30 seconds after starting. Do not race the engine while warming it up. Drive at moderate speed for a short distance first, especially in cold weather.

   In cold weather, keep the engine running for a minimum of 2–3 minutes before shutting it off. Starting and stopping the engine over a short period of time may make the vehicle more difficult to start.

**NOTE:**

**Care should be taken to avoid situations that can lead to potential battery discharge and potential no-start conditions such as:**

1. Installation or extended use of electronic accessories that consume battery power when the engine is not running (Phone chargers, GPS, DVD players, etc.)
2. Vehicle is not driven regularly and/or only driven short distances. In these cases, the battery may need to be charged to maintain battery health.

## ENGINE PROTECTION MODE

The engine has an engine protection mode to reduce the chance of damage if the coolant temperature becomes too high (for example, when climbing steep grades in high temperature with heavy loads, such as when towing a trailer). When the engine temperature reaches a certain level:

- The engine coolant temperature gauge will move toward the H position.
- Engine power may be reduced.
- The air conditioning cooling function may be automatically turned OFF for a short time (the blower will continue to operate).

Engine power and, under some conditions, vehicle speed will decrease. Vehicle speed can be controlled with the accelerator pedal, but the vehicle may not accelerate at the desired speed. The transmission will downshift or upshift as it reaches prescribed shift points. You can also shift manually.

As driving conditions change and engine coolant temperature is reduced, vehicle speed can be increased using the accelerator pedal, and air conditioning cooling function will automatically be turned back ON.

If:

1. The engine coolant temperature is not reduced.
2. The air conditioning cooling function does not turn back ON.
3. The engine oil pressure low/engine coolant temperature high warning light illuminates, this may indicate a malfunction. Move the vehicle off the road in a safe area and allow the engine to cool. If after checking the oil and coolant, the remains on, do not continue to drive and call a NISSAN dealer.

The malfunction indicator light (MIL) may also come ON. If **only** it remains on, you do not need to have your vehicle towed, but have it inspected soon by a NISSAN dealer. See “Malfunction indicator light (MIL)” in the “Instruments and controls ” section of this manual.

**⚠ WARNING**

**Overheating can result in reduced engine power and vehicle speed. The reduced speed may be lower than other traffic, which could increase the chance of a collision. Be especially careful when driving. If the vehicle cannot maintain a safe driving speed, pull to the side of the road in a safe area. Allow the engine to cool and return to normal operation. See “If your vehicle overheats” in the “In case of emergency” section of this manual.**

**⚠ CAUTION**

**Running the engine with the engine oil pressure warning light on could cause serious damage to the engine almost immediately. Such damage is not covered by warranty. Turn off the engine as soon as it is safe to do so.**

## AUTOMATIC TRANSMISSION

**⚠WARNING**

- **Do not depress the accelerator pedal while shifting from P (Park) or N (Neutral) to R (Reverse), or L (Low). Always depress the brake pedal until shifting is completed. Failure to do so could cause you to lose control and have an accident.**
- **Cold engine idle speed is high, so use caution when shifting into a forward or reverse gear before the engine has warmed up.**
- **Never shift to P (Park) or R (Reverse) while the vehicle is moving. This could cause an accident.**
- **Except in an emergency, do not shift to the N (Neutral) position while driving. Doing so can cause a loss of engine braking which may result in a collision, serious personal injury or death. In addition, coasting with the transmission in the N (Neutral) position may cause serious damage to the transmission.**

**⚠CAUTION**

- **When stopping the vehicle on an uphill grade, do not hold the vehicle by depressing the accelerator pedal. The foot brake should be used for this purpose.**
- **Do not downshift abruptly on slippery roads. This may cause a loss of control.**

The automatic transmission in your vehicle is electronically controlled to produce maximum power and smooth operation.

The recommended operating procedures for this transmission are shown on the following pages. Follow these procedures for maximum vehicle performance and driving enjoyment.

### Starting the vehicle

1. After starting the engine, fully depress the foot brake pedal before moving the shift selector out of the P (Park) position.
2. Keep the foot brake pedal depressed and move the shift selector into a driving gear.
3. Release the foot brake, then gradually start the vehicle in motion.

**The automatic transmission is designed so the foot brake pedal MUST be depressed before shifting from P (Park) to any drive position while the ignition switch is in the ON position.**

**The shift selector cannot be moved out of the P (Park) position and into any of the other gear positions if the ignition switch is placed in the LOCK or OFF position.**

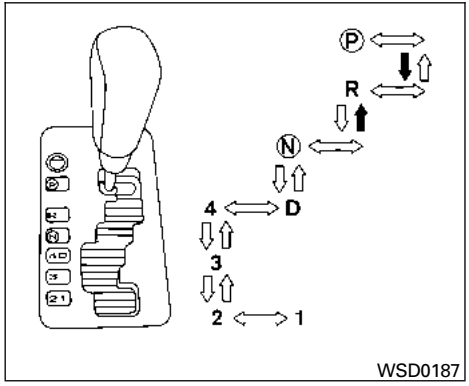


To move the shift selector:

➡ : Shift while depressing the brake pedal

⇨ : Shift without depressing brake pedal

## Shifting – console

After starting the engine, fully depress the brake pedal and move the shift selector out of the P (Park) position.

**⚠WARNING**

**Apply the parking brake if the shift selector is in any position while the engine is not running. Failure to do so could cause the vehicle to move unexpectedly or roll away and result in serious personal injury or property damage**

If the key is turned to the OFF position for any reason while the vehicle is in N (Neutral), or any D (Drive) position, the key cannot be turned to the LOCK position and be removed from the ignition switch. Move the shift selector to the P (Park) position, then the key can be turned to LOCK.

**P (Park):**

**⚠CAUTION**

**To prevent transmission damage, use the P (Park) or R (Reverse) position only when the vehicle is completely stopped.**

Use the P (Park) shift selector position when the vehicle is parked or when starting the engine. Make sure the vehicle is completely stopped. **The brake pedal should be depressed to move the shift selector from N (Neutral) or any drive position to P (Park).** Apply the parking brake. When parking on a hill, apply the parking brake first, then move the shift selector into the P (Park) position.

**R (Reverse):**

**⚠CAUTION**

**To prevent transmission damage, use the P (Park) or R (Reverse) position only when the vehicle is completely stopped.**

Use the R (Reverse) position to back up. Make sure the vehicle is completely stopped before selecting the R (Reverse) position. **The brake pedal must be depressed to move the shift selector from P (Park), N (Neutral) or any drive position to R (Reverse).**

**N (Neutral):**

Neither forward nor reverse gear is engaged. The engine can be started in this position. You may shift to N (Neutral) and restart a stalled engine while the vehicle is moving.

**D (Drive):**

Use this position for all normal forward driving.

**4 (Fourth gear):**

Use this position for driving up and down long slopes where engine braking would be advantageous.

Do not downshift into the 4 position at speeds over the following and do not exceed the following speeds in the 4 position.

4H:

62 MPH (100 km/h)

4LO:

31 MPH (50 km/h)

**3 (Third gear):**

Use this position for driving up and down long slopes where engine braking would be advantageous.

**2 (Second gear):**

Use this position for hill climbing or engine braking on downhill grades.

Do not downshift into the 2 position at speeds over the following and do not exceed the following speeds in the 2 position.

2WD and AUTO:

71 MPH (115 km/h) w/o tow mode

62 MPH (100 km/h) w/tow mode

4H:

62 MPH (100 km/h) w/o tow mode

62 MPH (100 km/h) w/tow mode

4LO:

31 MPH (50 km/h) w/o tow mode

27 MPH (44 km/h) w/tow mode

**1 (Low gear):**

Use this position when climbing steep hills slowly or slow driving through deep snow, sand or mud, or for maximum engine braking on steep downhill grades.

Do not downshift into the 1 position at speeds over the following and do not exceed the following speeds in the 1 position.

2WD and AUTO:

43 MPH (70 km/h) w/o tow mode

37 MPH (60 km/h) w/tow mode

4H:

43 MPH (70 km/h) w/o tow mode

37 MPH (60 km/h) w/tow mode

4LO:

19 MPH (30 km/h) w/o tow mode

16 MPH (27 km/h) w/tow mode

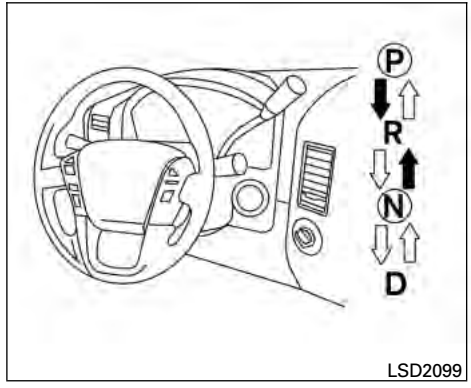

LSD2099

To move the shift selector:

➡ : Shift while depressing the brake pedal

⇨ : Shift without depressing brake pedal

## Shifting – column

After starting the engine, fully depress the brake pedal and move the shift selector out of the P (Park) position.

**⚠WARNING**

**Apply the parking brake if the shift selector is in any position while the engine is not running. Failure to do so could cause the vehicle to move unexpectedly or roll away and result in serious personal injury or property damage.**

If the key is turned to the OFF or ACC position for any reason while the vehicle is in N (Neutral), or any D (Drive) position, the key cannot be turned to the LOCK position and be removed from the ignition switch. Move the shift selector to the P (Park) position, then the key can be turned to LOCK.

**P (Park):**

**⚠CAUTION**

**To prevent transmission damage, use the P (Park) or R (Reverse) position only when the vehicle is completely stopped.**

Use the P (Park) shift selector position when the vehicle is parked or when starting the engine. Make sure the vehicle is completely stopped. **The brake pedal should be depressed to move the shift selector from N (Neutral) or any drive position to P (Park).** Apply the parking brake. When parking on a hill, apply the parking brake first, then move the shift selector into the P (Park) position.

**R (Reverse):**

**⚠CAUTION**

**To prevent transmission damage, use the P (Park) or R (Reverse) position only when the vehicle is completely stopped.**

Use the R (Reverse) position to back up. Make sure the vehicle is completely stopped before selecting the R (Reverse) position. **The brake pedal must be depressed to move the shift selector from P (Park), N (Neutral) or any drive position to R (Reverse).**

**N (Neutral):**

Neither forward nor reverse gear is engaged. The engine can be started in this position. You may shift to N (Neutral) and restart a stalled engine while the vehicle is moving.

**D (Drive):**

Use this position for all normal forward driving.

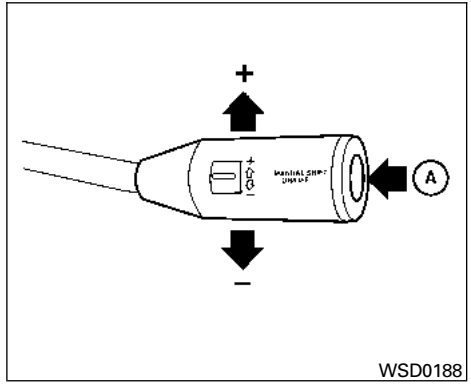


## Manual shift mode (if so equipped)

When the manual shift mode button Ⓐ is pressed while driving, the transmission enters the manual shift mode. Shift ranges can be selected manually.

In the manual shift mode, the shift range is displayed on the position indicator in the meter. After pressing the manual shift mode button, the position indicator first displays M4 (Fourth)

Shift ranges up or down one by one as follows:

M1 ⟷ M2 ⟷ M3 ⟷ M4 ⟷ D

**M4 (Fourth):**

For driving up or down long slopes where engine braking would be advantageous.

Shift ranges up or down one by one as follows:

M1 ⟷ M2 ⟷ M3 ⟷ M4

M4 will be displayed on the position indicator in the meter.

**M3 (Third):**

Use for hill climbing or engine braking on downhill grades.

Shift ranges up or down one by one as follows:

M1 ⟷ M2 ⟷ M3

M3 will be displayed on the position indicator in the meter.

**M2 (Second):**

Use for hill climbing or engine braking on downhill grades.

Shift ranges up or down one by one as follows:

M1 ⟷ M2

M2 will be displayed on the position indicator in the meter.

**M1 (First):**

Use this position when climbing steep hills slowly or driving slowly through deep snow, sand or mud, or for maximum engine braking on steep downhill grades.

M1 will be displayed on the position indicator on the meter.

- Remember not to drive at high speeds for extended periods of time in lower than M4 range. This reduces fuel economy.

**When shifting up:**

Move the shift selector to the + (up) side. (Shifts to higher range.)

**When shifting down:**

Move the shift selector to the − (down) side. (Shifts to lower range.)

- The transmission will automatically downshift the gears. (For example, if you select the 3rd range, the transmission will shift down between the 3rd and 1st gears.)
- Moving the shift selector rapidly to the same side twice will shift the ranges in succession.

**When canceling the manual shift mode:**

Press the manual shift mode button Ⓐ to return the transmission to the normal driving mode.

- **In the manual shift mode, the transmission may not shift to the selected gear immediately because of vehicle speed. The transmission will up or down shift when vehicle speed matches the programmed transmission shift points. This helps maintain driving performance and reduces the chance of vehicle damage or loss of control.**
- **In the manual shift mode, the transmission will not up shift to a higher gear than is manually selected. When the vehicle speed decreases, the transmission automatically shifts down and shifts to 1st gear before the vehicle comes to a stop.**

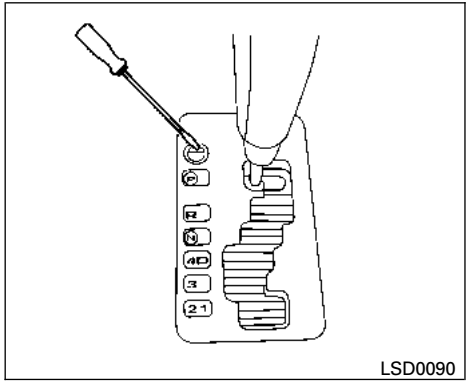


**Console shift**

## Shift lock release

If the battery is discharged, the shift selector may not be moved from the P (Park) position even with the brake pedal depressed.

To move the shift selector, release the shift lock. The shift selector can be moved to N (Neutral). However, for models without the NISSAN vehicle immobilizer system, the steering wheel will be locked unless the ignition switch is turned to the ON position. This allows the vehicle to be moved if the battery is discharged.

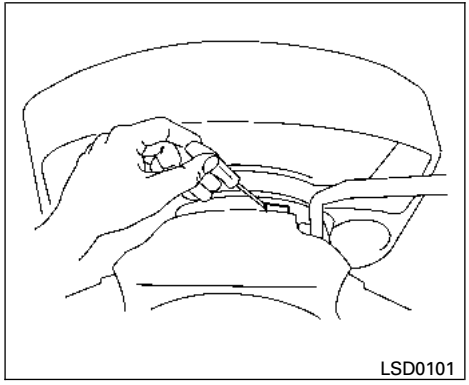


**Column shift**

To push the shift lock release, complete the following procedure:

1. Turn the ignition key to the LOCK position and remove the key
2. Apply the parking brake.
3. On vehicles equipped with a column shifter, tilt the steering wheel down to the lowest position.
4. Remove the shift lock release cover as shown.
5. Use a protective cloth on the end of a small screwdriver before inserting it in the shift lock release slot and pushing down.
6. Move the shift selector to the N (Neutral) position while holding down the shift lock release.
7. For models without the NISSAN vehicle immobilizer system, turn the key to the ON position to unlock the steering wheel.
8. Now the vehicle may be moved to the desired location.

If the shift selector cannot be moved out of P (Park), have a NISSAN dealer check the automatic transmission system as soon as possible.

**⚠WARNING**

**If the shift selector cannot be moved from the P (Park) position while the engine is running and the brake pedal is depressed, the stop lights may not work. Malfunctioning stop lights could cause an accident injuring yourself and others.**

### Accelerator downshift — in D position —

For passing or hill climbing, depress the accelerator pedal to the floor. This shifts the transmission down into a lower gear, depending on the vehicle speed.

### Fail-safe

When the fail-safe operation occurs, please note that the transmission will be locked in any of the forward gears according to the condition.

**If the vehicle is driven under extreme conditions, such as excessive wheel spinning and subsequent hard braking, the fail-safe system may be activated. This will occur even if all electrical circuits are functioning properly. In this case, turn the ignition switch OFF and wait for 3 seconds. Then turn the ignition switch back to the ON position. The vehicle should return to its normal operating condition. If it does not return to its normal operating condition, have a NISSAN dealer check the transmission and repair it if necessary.**

**⚠ WARNING**

- **Be sure the parking brake is fully released before driving. Failure to do so can cause brake failure and lead to an accident.**
- **Do not release the parking brake from outside the vehicle.**
- **Do not use the shift selector in place of the parking brake. When parking, be sure the parking brake is fully engaged.**
- **Do not leave children unattended in a vehicle. They could release the parking brake and cause an accident.**

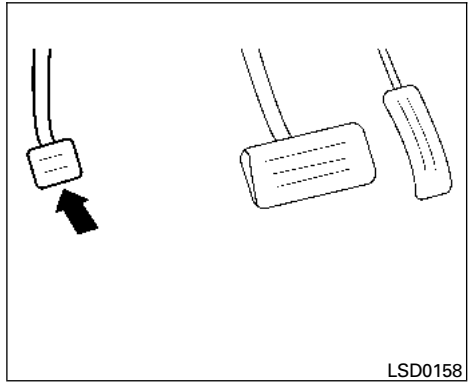


**To engage:** Firmly depress the parking brake.

**To release:**

1. Firmly apply the foot brake.
2. Move the shift selector to the P (Park) position.
3. Firmly depress the parking brake pedal and it will release.
4. Before driving, be sure the brake warning light goes out.

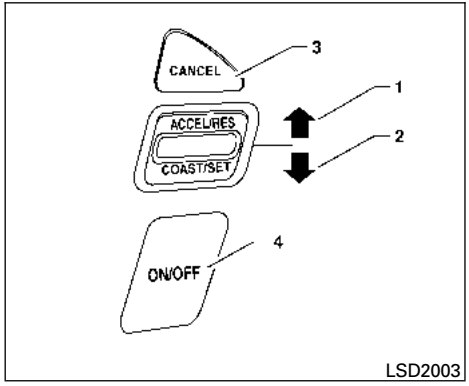


1. ACCEL/RES switch
2. COAST/SET switch
3. CANCEL switch
4. ON·OFF switch

## PRECAUTIONS ON CRUISE CONTROL

- If the cruise control system malfunctions, it cancels automatically. The SET indicator light in the vehicle information display then blinks to warn the driver, see “Vehicle information display” in the “Instruments and controls” section.
- If the SET indicator light blinks, push the cruise control ON·OFF switch off and have the system checked by a NISSAN dealer.
- The SET indicator light may blink when the cruise control ON·OFF switch is pushed ON while pushing the ACCEL/RES, COAST/SET, or CANCEL switch. To properly set the cruise control system, use the following procedures.

**⚠WARNING**

**Do not use the cruise control when driving under the following conditions:**

- **When it is not possible to keep the vehicle at a set speed.**
- **In heavy traffic or in traffic that varies in speed.**
- **On winding or hilly roads.**
- **On slippery roads (rain, snow, ice, etc.).**
- **In very windy areas.**

**Doing so could cause a loss of vehicle control and result in an accident.**

## CRUISE CONTROL OPERATIONS

The cruise control allows driving at a speed between 25 - 89 MPH (40 - 144 km/h) without keeping your foot on the accelerator pedal.

**To turn on the cruise control,** push the ON·OFF switch on. The CRUISE indicator light in the vehicle information display will illuminate.

**To set cruising speed,** accelerate the vehicle to the desired speed, push the COAST/SET switch and release it. The SET indicator light in the vehicle information display will illuminate. Take your foot off the accelerator pedal. Your vehicle maintains the set speed.

- **To pass another vehicle,** depress the accelerator pedal. When you release the pedal, the vehicle returns to the previously set speed.
- The vehicle may not maintain the set speed when going up or down steep hills. If this happens, drive without the cruise control.

**To cancel the preset speed,** use one of the following three methods.

- Push the CANCEL button; the SET indicator light in the vehicle information display goes out.
- Tap the brake pedal; the SET indicator light goes out.
- Push the ON·OFF switch off. Both the CRUISE indicator light and SET indicator light in the vehicle information display go out.

The cruise control is automatically canceled and the SET light in the vehicle information display goes out if:

- you depress the brake pedal while pushing the ACCEL/RES or SET/COAST switch. The preset speed is deleted from memory.
- the vehicle slows down more than 8 MPH (13 km/h) below the set speed.
- you move the shift selector to N (Neutral).

**To reset at a faster cruising speed,** use one of the following three methods.

- Depress the accelerator pedal. When the vehicle attains the desired speed, push and release the COAST/SET switch.
- Push and hold the ACCEL/RES switch. When the vehicle attains the speed you desire, release the switch.
- Push and release the ACCEL/RES switch. Each time you do this, the set speed increases by about 1 MPH (1.6 km/h).

**To reset at a slower cruising speed,** use one of the following three methods.

- Lightly tap the brake pedal. When the vehicle attains the desired speed, push the COAST/SET switch and release it.
- Push and hold the COAST/SET switch. Release the switch when the vehicle slows to the desired speed.
- Push and release the COAST/SET switch. Each time you do this, the set speed decreases by about 1 MPH (1.6 km/h).

**To resume the preset speed,** push and release the ACCEL/RES switch. The vehicle returns to the last set cruising speed when the vehicle speed is over 25 MPH (40 km/h).

**⚠ CAUTION**

**During the first 1,200 miles (2,000 km), follow these recommendations to obtain maximum engine performance and ensure the future reliability and economy of your new vehicle. Failure to follow these recommendations may result in shortened engine life and reduced engine performance.**

- Avoid driving for long periods at constant speed, either fast or slow, and do not run the engine over 4,000 rpm.
- Do not accelerate at full throttle in any gear.
- Avoid quick starts.
- Avoid hard braking as much as possible.
- Do not tow a trailer for the first 500 miles (800 km). Your engine, axle or other parts could be damaged.

## INCREASING FUEL ECONOMY

- Accelerate slowly and smoothly. Maintain cruising speeds with a constant accelerator position.
- Drive at moderate speeds on the highway. Driving at high speed lowers fuel economy.
- Avoid unnecessary stopping and braking. Maintain a safe distance behind other vehicles.
- Use a proper gear range which suits road conditions. On level roads, shift into high gear as soon as possible.
- Avoid unnecessary engine idling.
- Keep your engine tuned up.
- Follow the recommended periodic maintenance schedule.
- Keep the tires inflated to the correct pressure. Low tire pressure increases tire wear and lowers fuel economy.
- Keep the front wheels in correct alignment. Improper alignment increases tire wear and lowers fuel economy.
- Air conditioner operation lowers fuel economy. Use the air conditioner only when necessary.
- When cruising at highway speeds, it is more economical to use the air conditioner and leave the windows closed to reduce drag.
- For vehicles equipped with 4x4, use 4H or 4L position only when necessary. Four-wheel drive operation lowers fuel economy.

## 4x4 USING FOUR WHEEL DRIVE (4WD) (if so equipped)

**WARNING**

- **For 4WD equipped vehicles, do not attempt to raise two wheels off the ground and shift the transmission to any drive or reverse position with the engine running. Doing so may result in drivetrain damage or unexpected vehicle movement which could result in serious vehicle damage or personal injury.**
- **Do not attempt to test a 4WD equipped vehicle on a 2-wheel dynamometer (such as the dynamometers used by some states for emissions testing), or similar equipment even if the other two wheels are raised off the ground. Make sure you inform test facility personnel that your vehicle is equipped with 4WD before it is placed on a dynamometer. Using the wrong test equipment may result in drivetrain damage or unexpected vehicle movement which could result in serious vehicle damage or personal injury.**

**⚠ CAUTION**

- **Do not drive the vehicle in the 4H or 4LO position on dry hard surface roads. Driving on dry, hard surfaces in 4H or 4LO may cause unnecessary noise, tire wear and increased fuel consumption.**

  **If the 4WD warning light turns on when you are driving on dry hard surface roads:**

  **– in the 4H position, shift the 4WD shift switch to 2WD.**

  **– in the 4LO position, stop the vehicle, move the shift selector to the N (Neutral) position with the brake pedal depressed, and shift the 4WD shift switch to 2WD.**

- **If the warning light is still on after the above operation, have your vehicle checked by a NISSAN dealer as soon as possible.**

## TRANSFER CASE SHIFTING PROCEDURES

The part time 4WD system provides 3 positions (2WD, 4H and 4LO), so you can select the desired drive mode according to the driving conditions.

2WD or 4WD shift procedure:

| 4WD Shift Switch Position | Wheels Driven | Indicator Light | | Use Conditions | 4WD Shift Procedure |
|---|---|---|---|---|---|
| | | 4WD shift | Transfer 4LO position | | |
| 2WD | Rear wheels | | | For driving on dry, paved roads (Economy drive) | Move the 4WD switch.<br>2WD <—> 4H<br>4WD shift indicator light will indicate transfer shift position engaged.<br>IT IS NOT NECESSARY TO MOVE THE SHIFT SELECT TO THE N POSITION IN THIS OPERATION. PERFORM THIS OPERATION WHEN DRIVING STRAIGHT. |
| 4H | 4 wheels | | | For driving on rocky, sandy or snow-covered roads | |
| 4LO | Neutral | | *1<br>May blink | Neutral disengages the automatic transmission mechanical parking lock, which will allow the vehicle to roll. Do not leave the transfer shift position in Neutral.*2 | 1. Stop the vehicle.<br>2. With the brake pedal depressed, move the shift selector to the N position.<br>3. With the brake pedal depressed, depress and turn the 4WD shift switch to 4LO or 4H.<br>THE TRANSFER CASE DOES NOT ENGAGE BETWEEN 4H AND 4LO (OR 4LO TO 4H) UNLESS YOU HAVE FIRST STOPPED THE VEHICLE, DEPRESSED THE BRAKE PEDAL AND MOVED THE SHIFT SELECTOR TO NEUTRAL. *3 |
| | 4 wheels | | Illuminated | For use when maximum power and traction is required (for example: on steep grades or rocky, sandy, muddy roads) | |

*1: Before moving the shift selector from neutral, wait until the 4LO indicator light stays on steady. This indicates that the 4WD shift procedure is completed and the transfer gear is correctly set in the 4LO position. If the vehicle is shifted into gear before the indicator is on steady, the transfer gear may grind, not engage correctly or stay in the neutral position.

- If the 4WD warning light illuminates, perform the following procedure to return the transfer case to correct operating condition.

1. Turn off the engine by turning the ignition switch ″OFF″.
2. Start the engine.

- Check that the 4WD warning light turns off. If the 4WD light illuminates, have the system checked by a NISSAN dealer.

3. Apply the parking brake, depress the brake pedal and move the shift selector to Neutral position.
4. With the brake pedal depressed, move the 4WD shift switch to desired mode.

- Be sure to wait until the transfer gear change completes before shifting the shift selector from Neutral position.

*2: While changing in and out of 4LO, the ignition key must be ON and the vehicle's engine must be running for a shift to take place and for the indicator lights (4WD shift and 4LO position indicator) to be operable. Otherwise, the shift will not take place and no indicator lights will be on or flashing.

*3: Make sure the transfer 4LO position indicator light turns on when you shift the 4WD shift switch to 4LO. The indicator light will also turn on when 4LO is selected. See “Vehicle Dynamic Control (VDC) system” later in this section.

The transfer case 4WD shift switch is used to select either 2WD or 4WD depending on the driving conditions. There are three types of drive modes available, 2WD, 4H and 4LO.

The 4WD shift switch electronically controls the transfer case operation. Rotate the switch to move between each mode, 2WD, 4H and 4LO.

**To change into or out of 4LO, the vehicle MUST be stationary, shift the shift selector to neutral, and depress the brake pedal. The switch must be pushed and turned to select 4LO.**

**⚠WARNING**

- **When parking, apply the parking brake before stopping the engine and make sure that the 4WD shift indicator light is on and the ATP warning light goes off. Otherwise, the vehicle could unexpectedly move even if the automatic transmission is in the P position.**
- **The 4LO indicator light must stop blinking and remain illuminated or turn off before shifting the transmission into gear. If the shift selector is shifted from the "N" position to any other gear when the 4LO indicator light is blinking, the vehicle may move unexpectedly.**

**⚠CAUTION**

- **Never shift the 4WD shift switch between 4LO and 4H while driving.**
- **The 4H position provides greater traction. Avoid excessive speed, as it will cause increased fuel consumption and higher oil temperatures, and could damage drivetrain components. Speeds over 62 MPH (100 km/h) in 4H is not recommended.**
- **The 4LO position provides maximum power and traction. Avoid raising vehicle speed excessively, as the maximum speed is approximately 31 MPH (50 km/h).**
- **When driving straight, shift the 4WD shift switch to the 2WD or 4H position. Do not move the 4WD shift switch when making a turn or reversing.**
- **Do not shift the 4WD shift switch (between 2WD and 4H) while driving on steep downhill grades. Use the engine brake and low automatic transmission gears (D1 or D2) for engine braking.**
- **Do not operate the 4WD shift switch (between 2WD and 4H) with the rear wheels spinning.**
- **Do not drive on dry hard surface roads in the 4H or 4LO position. Driving on dry hard surfaces in 4H or 4LO may cause unnecessary noise and tire wear. NISSAN recommends driving in the 2WD position under these conditions.**
- **The 4WD transfer case may not be shifted between 4H and 4LO at low ambient temperatures and the transfer 4LO position indicator light may blink even when the 4WD shift switch is shifted. After driving for a while you can change the 4WD transfer case between 4H and 4LO.**

When driving on rough roads,

- Set the 4WD shift switch to 4H or 4LO.
- Drive carefully according to the road surface conditions.

When the vehicle is stuck,

- Set the 4WD shift switch to 4H or 4LO.
- Use the Electronic Locking Rear Differential (E-Lock) system (if so equipped). Turn the switch ON while the vehicle is stationary and apply the throttle to try to free the vehicle.

- If it is difficult to free the vehicle, rock the vehicle back and forth between reverse and drive gears.
- If the vehicle is stuck deep in mud, place stones or wooden blocks under the tires. Then try the recovery procedures above. Tire chains may be effective.

**⚠ CAUTION**

- **Do not spin the tires excessively. Tires will sink deep into the mud, making it difficult to free the vehicle.**
- **Avoid shifting gears with the engine running at high speeds as this may cause malfunction.**

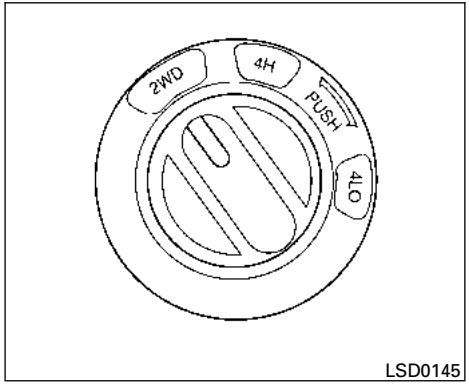


## 4WD shift switch operations

- Shift the 4WD shift switch to either the 2WD, 4H or 4LO position, depending on driving conditions.
- **If the 4WD shift switch is operated while making a turn, accelerating or decelerating or if the key switch is turned off while in the 4H or 4LO, you may feel a jolt. This is not abnormal.**
- **When the vehicle is stopped after making a turn, you may feel a slight jolt after the shift selector is shifted to N or P. This occurs because the transfer clutch is released and not because of a malfunction.**

**⚠ CAUTION**

- **When driving straight, shift the 4WD shift switch to the 2WD or 4H position. Do not move the 4WD shift switch when making a turn or reversing.**
- **Do not shift the 4WD shift switch while driving on steep downhill grades. Use the engine brake and low automatic transmission gears (D1 or D2) for engine braking.**
- **Do not operate the 4WD shift switch with the rear wheels spinning.**
- **Before placing the 4WD shift switch in the 4H position from 2WD, ensure the vehicle speed is less than 62 MPH (100 km/h). Failure to do so can damage the 4WD system.**
- **Never shift the 4WD shift switch between 4LO and 4H while driving.**

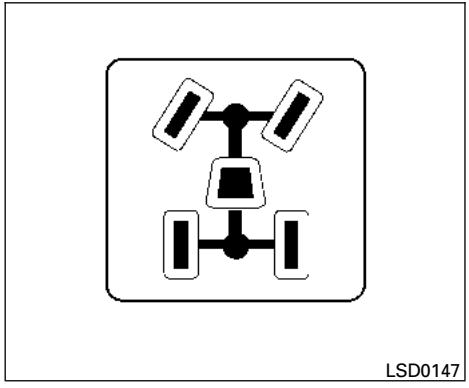


## 4WD shift indicator light

The 4WD shift indicator light is located in the vehicle information display.

The light should turn off within 1 second after turning the ignition switch to the ON position.

While the engine is running, the 4WD shift indicator light will illuminate the position selected by the 4WD shift switch.

- **The 4WD shift indicator light may blink while shifting from one drive mode to the other. When the shifting is completed, the 4WD shift indicator light will come on.**
- If the 4WD warning light comes on, the 4WD indicator light goes out.

**⚠CAUTION**

- **If the 4WD shift indicator light indication changes to 2WD when the 4WD shift switch is shifted to the 4H position at low ambient temperatures, the 2WD mode may be being engaged due to malfunctioning drive system. If the indicator does not return to normal and the 4WD warning light comes on, have the system checked by the nearest NISSAN dealer.**

## 4WD warning light

| Warning light | Comes on or blinks when: |
|---|---|
| 4WD Comes on | There is a malfunction in the 4–wheel drive system |
| 4WD Blinks slowly | The difference in wheel rotation is large |

The 4WD warning light is located in the meter.

The 4WD warning light comes on when the key switch is turned to ON. It turns off soon after the engine is started.

If any malfunction occurs in the 4WD system when the key switch is ON, the warning light will either remain illuminated or blink.

If the 4WD warning light comes on, the 4WD shift indicator light goes out.

A large difference between the diameters of front and rear wheels will make the warning light blink slowly (about once per two seconds). Change the 4WD shift switch into 2WD and do not drive fast.

**⚠CAUTION**

- **If the warning light comes on or blinks slowly during operation or rapidly after stopping the vehicle for a while, have your vehicle checked by a NISSAN dealer as soon as possible.**
- **Shifting between 4H and 4LO is not recommended when the 4WD warning light turns on.**

- **When the warning light comes on, the 2WD mode may be engaged even if the 4WD shift switch is in 4H. Be especially careful when driving. If corresponding parts are malfunctioning, the 4WD mode will not be engaged even if the 4WD shift switch is shifted.**
- **Do not drive the vehicle in the 4H or 4LO position on dry hard surface roads. Driving on dry, hard surfaces in 4H or 4LO may cause unnecessary noise, tire wear and increased fuel consumption.**

  **If the 4WD warning light turns on when you are driving on dry hard surface roads:**

  - **in the 4H position, shift the 4WD shift switch to 2WD.**
  - **in the 4LO position, stop the vehicle, move the automatic transmission shift selector to the N position with the brake pedal depressed, and shift the 4WD shift switch to 2WD.**
- **If the warning light is still on after the above operation, have your vehicle checked by a NISSAN dealer as soon as possible.**
- **The transfer case may be damaged if you continue driving with the warning light blinking.**

## ELECTRONIC LOCKING REAR DIFFERENTIAL (E-Lock) SYSTEM (if so equipped)

The E-Lock system can provide additional traction and should only be used when a vehicle has become or is becoming stuck. This system operates by electronically “locking” the two rear drive wheels together, allowing them to turn at the same speed. The system is used when it is not possible to free a stuck vehicle even when using the 4LO position (4 wheel drive vehicles).

When added traction is required, activate the E-Lock system by pushing the switch ON. See “Electronic locking rear differential (E-Lock) system switch” in the “Instruments and Controls” section. Once the system fully engages, the indicator light in the instrument panel will remain ON. When the system is activated, both rear wheels will engage, providing added traction.

The rear wheels may momentarily slip or move to engage the system, and the system will only engage up to approximately 4 MPH (7 km/h). Once the vehicle is free, the system should be turned OFF and driving resumed.

The Anti-Lock Brake (ABS) system is disabled and the ABS light illuminates when the E-Lock system is ON. Also, the Vehicle Dynamic Control (VDC) system is disabled and the VDC light illuminates when the E-Lock system is ON.

**⚠ WARNING**

- **Never leave the E-Lock system ON when driving on paved or hard-surfaced roads. Turning the vehicle may result in the rear wheels slipping and result in an accident and personal injury. After using the E-Lock system to free the vehicle, turn the system OFF.**
- **Use the E-Lock system only when freeing a stuck vehicle. Try the 4LO position before using the E-Lock system. Never use the E-Lock system on a slippery road surface such as snow or ice surface. Using the E-Lock system when driving in these road conditions may cause unexpected movement of the vehicle during engine braking, accelerating or turning, which may result in an accident and serious personal injury.**

**⚠ CAUTION**

- **After using the E-Lock system, turn the switch OFF to prevent possible damage to driveline components from extended use.**
- **Do not drive the vehicle at speeds faster than 12 MPH (20 km/h) when the system is engaged. Doing so could damage drivetrain components.**
- **Do not turn on the E-lock system while the tires are spinning. Doing so could damage drivetrain components.**

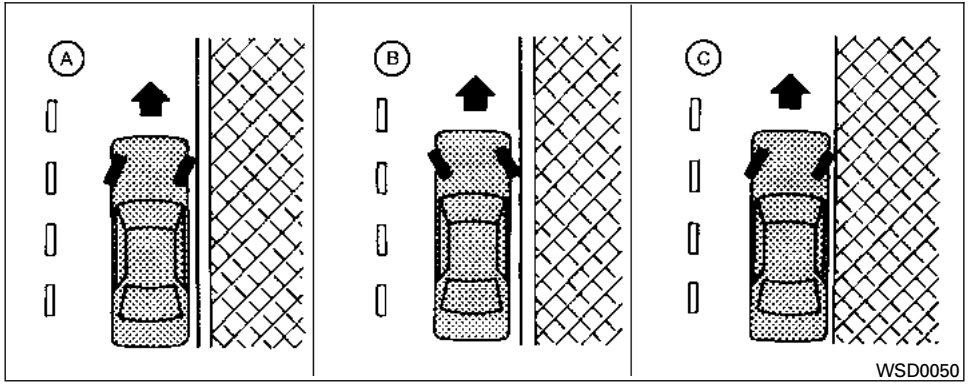


**⚠WARNING**

- **Do not stop or park the vehicle over flammable materials such as dry grass, waste paper or rags. They may ignite and cause a fire.**
- **Safe parking procedures require that both the parking brake be set and the transmission placed into P (Park). Failure to do so could cause the vehicle to move unexpectedly or roll away and result in an accident. Make sure the shift selector has been pushed as far forward as it can go and cannot be moved without depressing the foot brake pedal.**
- **Never leave the engine running while the vehicle is unattended.**
- **Do not leave children unattended inside the vehicle. They could unknowingly activate switches or controls. Unattended children could become involved in serious accidents.**

1. Firmly apply the parking brake.
2. Move the shift selector to the P (Park) position.
3. To help prevent the vehicle from rolling into traffic when parked on an incline, it is a good practice to turn the wheels as illustrated.
   - HEADED DOWNHILL WITH CURB: Ⓐ

     Turn the wheels into the curb and move the vehicle forward until the curb side wheel gently touches the curb.
   - HEADED UPHILL WITH CURB: Ⓑ

     Turn the wheels away from the curb and move the vehicle back until the curb side wheel gently touches the curb.
   - HEADED UPHILL OR DOWNHILL, NO CURB: Ⓒ

     Turn the wheels toward the side of the road so the vehicle will move away from the center of the road if it moves.
4. Place the ignition switch in the LOCK position.

## POWER STEERING

The power assisted steering uses a hydraulic pump, driven by the engine, to assist steering.

If the engine stops or the drive belt breaks, you will still have control of the vehicle. However, much greater steering effort is needed, especially in sharp turns and at low speeds.

**⚠WARNING**

**If the engine is not running or is turned off while driving, the power assist for the steering will not work. Steering will be harder to operate.**

## BRAKE SYSTEM

The brake system has two separate hydraulic circuits. If one circuit malfunctions, you will still have braking at 2 wheels.

### BRAKE PRECAUTIONS

#### Vacuum assisted brakes

The brake booster aids braking by using engine vacuum. If the engine stops, you can stop the vehicle by depressing the brake pedal. However, greater foot pressure on the brake pedal will be required to stop the vehicle and stopping distance will be longer.

#### Using the brakes

Avoid resting your foot on the brake pedal while driving. This will overheat the brakes, wear out the brake pads faster, and reduce gas mileage.

To help reduce brake wear and to prevent the brakes from overheating, reduce speed and downshift to a lower gear before going down a slope or long grade. Overheated brakes may reduce braking performance and could result in loss of vehicle control.

**⚠WARNING**

- **While driving on a slippery surface, be careful when braking, accelerating or downshifting. Abrupt braking or accelerating could cause the wheels to skid and result in an accident.**
- **If the engine is not running or is turned off while driving, the power assist for the brakes will not work. Braking will be harder.**

#### Wet brakes

When the vehicle is washed or driven through water, the brakes may get wet. As a result, your braking distance will be longer and the vehicle may pull to one side during braking.

To dry the brakes, drive the vehicle at a safe speed while lightly pressing the brake pedal to heat up the brakes. Do this until the brakes return to normal. Avoid driving the vehicle at high speeds until the brakes function correctly.

#### Parking brake break-in

Break-in the parking brake shoes whenever the effect of the parking brake is weakened or whenever the parking brake shoes and/or drum/rotors are replaced, in order to assure the best brake performance.

This procedure is described in the vehicle service manual and can be performed by a NISSAN dealer.

## ANTI-LOCK BRAKING SYSTEM (ABS)

**⚠WARNING**

- **The Anti-lock Braking System (ABS) is a sophisticated device, but it cannot prevent accidents resulting from careless or dangerous driving techniques. It can help maintain vehicle control during braking on slippery surfaces. Remember that stopping distances on slippery surfaces will be longer than on normal surfaces even with ABS. Stopping distances may also be longer on rough, gravel or snow covered roads, or if you are using tire chains. Always maintain a safe distance from the vehicle in front of you. Ultimately, the driver is responsible for safety.**
- **Tire type and condition may also affect braking effectiveness.**
  - **When replacing tires, install the specified size of tires on all four wheels.**
  - **When installing a spare tire, make sure that it is the proper size and type as specified on the Tire and Loading Information label. See "Tire and Loading Information label" in the "Technical and consumer information" section of this manual.**
  - **For detailed information, see "Wheels and tires" in the "Maintenance and do-it-yourself" section of this manual.**

The Anti-lock Braking System (ABS) controls the brakes so the wheels do not lock during hard braking or when braking on slippery surfaces. The system detects the rotation speed at each wheel and varies the brake fluid pressure to prevent each wheel from locking and sliding. By preventing each wheel from locking, the system helps the driver maintain steering control and helps to minimize swerving and spinning on slippery surfaces.

### Using the system

Depress the brake pedal and hold it down. Depress the brake pedal with firm steady pressure, but do not pump the brakes. The ABS will operate to prevent the wheels from locking up. Steer the vehicle to avoid obstacles.

**⚠WARNING**

**Do not pump the brake pedal. Doing so may result in increased stopping distances.**

### Self-test feature

The ABS includes electronic sensors, electric pumps, hydraulic solenoids and a computer. The computer has a built-in diagnostic feature that tests the system each time you start the engine and move the vehicle at a low speed in forward or reverse. When the self-test occurs, you may hear a "clunk" noise and/or feel a pulsation in the brake pedal. This is normal and does not indicate a malfunction. If the computer senses a malfunction, it switches the ABS off and illuminates the ABS warning light on the instrument panel. The brake system then operates normally, but without anti-lock assistance.

If the ABS warning light illuminates during the self-test or while driving, have the vehicle checked by a NISSAN dealer.

### Normal operation

The ABS operates at speeds above 3 - 6 MPH (5 - 10 km/h). The speed varies according to road conditions.

## ACTIVE BRAKE LIMITED SLIP (ABLS) SYSTEM

When the ABS senses that 1 or more wheels are close to locking up, the actuator rapidly applies and releases hydraulic pressure. This action is similar to pumping the brakes very quickly. You may feel a pulsation in the brake pedal and hear a noise from under the hood or feel a vibration from the actuator when it is operating. This is normal and indicates that the ABS is operating properly. However, the pulsation may indicate that road conditions are hazardous and extra care is required while driving.

- ABLS system uses automatic braking to transfer power from a slipping drive wheel to the wheel on the same axle with more traction. The ABLS system applies braking to the slipping wheel, which helps redirect power to the other wheel.
- On 4WD models the ABLS system operates in both 4H and 4LO modes. If 4WD mode is engaged, the ABLS system operates for both drive axles. On 2WD vehicles, the ABLS system operates on the drive axle only.
- The ABLS system is always ON. In some conditions, the system may automatically turn the ABLS system off. If the system is automatically turned off, normal brake function will continue. ABLS will function even when the VDC system is turned OFF.
- The ABLS does not operate if both wheels on a drive axle are slipping.

**⚠ WARNING**

- **The ABLS system helps provide increased traction, but will not prevent accidents due to abrupt steering operation or by careless driving or dangerous driving practices. Reduce vehicle speed and be especially careful when driving and cornering on slippery surfaces. Always drive carefully.**
- **Do not modify the vehicle's suspension. If suspension parts such as shock absorbers, struts, springs, stabilizer bars, bushings and wheels are not NISSAN approved for your vehicle or are extremely deteriorated, the ABLS system may not operate properly. This could adversely affect vehicle handling performance, and the slip indicator light may illuminate.**
- **If brake related parts such as brake pads, rotors and calipers are not NISSAN recommended or are extremely deteriorated, the ABLS system may not operate properly and the slip indicator light may illuminate.**
- **If wheels or tires other than the NISSAN recommended ones are used, the ABLS system may not operate properly and the slip indicator light may illuminate.**

## VEHICLE DYNAMIC CONTROL (VDC) SYSTEM

The Vehicle Dynamic Control (VDC) system uses various sensors to monitor driver inputs and vehicle motion. Under certain driving conditions, the VDC System helps to perform the following functions:

- Controls brake pressure to reduce wheel slip on one slipping drive wheel so power is transferred to a non slipping drive wheel on the same axle.
- Controls brake pressure and engine output to reduce drive wheel slip based on vehicle speed (traction control function).
- If the 4WD transfer case is shifted into 4LO the indicator light will come on and the VDC system will be turned off. See “Using four wheel drive (4WD)” earlier in this section.
- Controls brake pressure at individual wheels and engine output to help the driver maintain control of the vehicle in the following conditions:
  - understeer (vehicle tends to not follow the steered path despite increased steering input)
  - oversteer (vehicle tends to spin due to certain road or driving conditions)

The VDC system can help the driver to maintain control of the vehicle, but it can not prevent loss of vehicle control in all driving situations.

When the VDC system operates, the indicator in the instrument panel flashes so note the following:

- The road may be slippery or the system may determine some action is required to help keep the vehicle on the steered path.
- You may feel a pulsation in the brake pedal and hear a noise or vibration from under the hood. This is normal and indicates that the VDC system is working properly.
- Adjust your speed and driving to the road conditions.

See “Slip indicator light” and ”Vehicle Dynamic Control (VDC) OFF indicator light” in the ”Instruments and controls” section.

If a malfunction occurs in the system, the indicator light will come on in the instrument panel. The VDC system automatically turns off when these indicator lights are off.

The VDC OFF switch is used to turn off the VDC system. The indicator illuminates to indicate the VDC system is off.

When the VDC switch is used to turn off the system, the VDC system still operates to prevent one drive wheel from slipping by transferring power to a non slipping drive wheel. The indicator flashes if this occurs. All other VDC functions are off and the indicator will not flash.

The VDC system is automatically reset to on when the ignition switch is placed in the off position then back to the on position.

The computer has a built in diagnostic feature that tests the system each time you start the engine and move the vehicle forward or in reverse at a slow speed. When the self-test occurs, you may hear a clunk noise and/or feel a pulsation in the brake pedal. This is normal and is not an indication of a malfunction.

**WARNING**

- **The VDC system is designed to help the driver maintain stability but does not prevent accidents due to abrupt steering operation at high speeds or by careless or dangerous driving techniques. Reduce vehicle speed and be especially careful when driving and cornering on slippery surfaces and always drive carefully.**

- Do not modify the vehicle's suspension. If suspension parts such as shock absorbers, struts, springs, stabilizer bars, bushings and wheels are not NISSAN recommended for your vehicle or are extremely deteriorated, the VDC system may not operate properly. This could adversely affect vehicle handling performance, and the indicator may flash or the indicator light may illuminate.
- If brake related parts such as brake pads, rotors and calipers are not NISSAN recommended or are extremely deteriorated, the VDC system may not operate properly and the indicator light may illuminate.
- If engine control related parts are not NISSAN recommended or are extremely deteriorated, the indicator light may illuminate.
- When driving on extremely inclined surfaces such as higher banked corners, the VDC system may not operate properly and the indicator may flash or the indicator light may illuminate. Do not drive on these types of roads.
- When driving on an unstable surface such as a turntable, ferry, elevator or ramp, the indicator may flash or the indicator light may illuminate. This is not a malfunction. Restart the engine after driving onto a stable surface.
- If wheels or tires other than the NISSAN recommended ones are used, the VDC system may not operate properly and the indicator may flash or the indicator light may illuminate.
- The VDC system is not a substitute for winter tires or tire chains on a snow covered road.

## REAR SONAR SYSTEM (if so equipped)

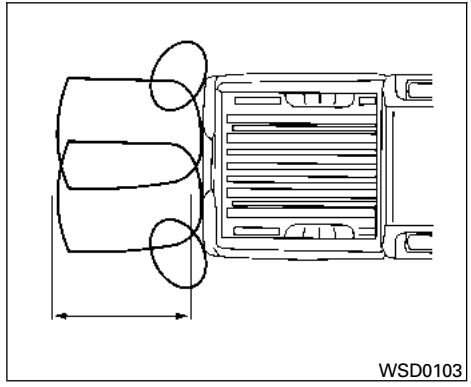


**WARNING**

- Always turn and look back before backing up. The RSS is not a substitute for proper backing procedures.
- Read and understand the limitations of the rear sonar system as contained in this section. Inclement weather may affect the function of the RSS; this may include reduced performance or a false activation.
- This system is not designed to prevent contact with small or moving objects.

- **The system is designed as an aid to the driver in detecting large stationary objects to help avoid damaging the vehicle. The system will not detect small objects below the bumper, and may not detect objects close to the bumper or on the ground.**
- **If your vehicle sustains damage to the rear bumper fascia, leaving it misaligned or bent, the sensing zone may be altered causing inaccurate measurement of obstacles or false alarms.**

The Rear Sonar System (RSS) sounds a tone to warn the driver of obstacles near the rear bumper when the shift selector is in R (Reverse). The system may not detect objects at speeds above 3 mph (5 km/h) and may not detect certain angular or moving objects.

The RSS detects obstacles up to 5.9 feet (1.8 m) from the rear bumper with a decreased coverage area at the outer corners of the bumper, (refer to the illustration for approximate zone coverage areas). As you move closer to the obstacle, the rate of the tone increases. When the obstacle is less than 10 inches (25.0 cm) away, the tone will sound continuously. If the RSS detects a stationary or receding object further than 10 inches (25.0 cm) from the side of the vehicle, the tone will sound for only three seconds. Once the system detects an object approaching, the tone will sound again.

The RSS automatically turns on when the shift selector is placed in R (Reverse) and the ignition is ON. The RSS OFF switch on the instrument panel allows the driver to turn the RSS on and off. To turn the RSS off, the ignition must be ON, and the shift selector in R (Reverse). An indicator light on the switch will illuminate when the system is turned off. If the indicator light illuminates when the RSS is not turned off, it may indicate a malfunction in the RSS.

Keep the RSS sensors (located on the rear bumper fascia) free from snow, ice and large accumulations of dirt (do not clean the sensors with sharp objects). If the sensors are covered, it will affect the accuracy of the RSS.

## FREEING A FROZEN DOOR LOCK

To prevent a door lock from freezing, apply deicer through the key hole. If the lock becomes frozen, heat the key before inserting it into the key hole or use the remote keyless entry keyfob (if so equipped).

## ANTI-FREEZE

In the winter when it is anticipated that the temperature will drop below 32°F (0°C), check the anti-freeze to assure proper winter protection. For details, see “Engine cooling system” in the “Maintenance and do-it-yourself” section of this manual.

## BATTERY

If the battery is not fully charged during extremely cold weather conditions, the battery fluid may freeze and damage the battery. To maintain maximum efficiency, the battery should be checked regularly. For details, see “Battery” in the “Maintenance and do-it-yourself” section of this manual.

## DRAINING OF COOLANT WATER

If the vehicle is to be left outside without anti-freeze, drain the cooling system, including the engine block. Refill before operating the vehicle. For details, see “Changing engine coolant” in the “Maintenance and do-it-yourself” section of this manual.

## TIRE EQUIPMENT

1. SUMMER tires have a tread designed to provide superior performance on dry pavement. However, the performance of these tires will be substantially reduced in snowy and icy conditions. If you operate your vehicle on snowy or icy roads, NISSAN recommends the use of MUD & SNOW or ALL SEASON TIRES on all four wheels. Please consult a NISSAN dealer for the tire type, size, speed rating and availability information.
2. For additional traction on icy roads, studded tires may be used. However, some U.S. states and Canadian provinces prohibit their use. Check local, state and provincial laws before installing studded tires.

**Skid and traction capabilities of studded snow tires on wet or dry surfaces may be poorer than that of non-studded snow tires.**

3. Tire chains may be used. For details see “Tire chains” in the “Maintenance and do-it-yourself” section of this manual.

## SPECIAL WINTER EQUIPMENT

It is recommended that the following items be carried in the vehicle during winter:

- A scraper and stiff-bristled brush to remove ice and snow from the windows and wiper blades.
- A sturdy, flat board to be placed under the jack to give it firm support.
- A shovel to dig the vehicle out of snowdrifts.
- Extra washer fluid to refill the windshield-washer fluid reservoir.

## DRIVING ON SNOW OR ICE

**⚠WARNING**

- **Wet ice (32°F, 0°C and freezing rain), very cold snow or ice can be slick and very hard to drive on. The vehicle will have much less traction or “grip” under these conditions. Try to avoid driving on wet ice until the road is salted or sanded.**
- **Whatever the condition, drive with caution. Accelerate and slow down with care. If accelerating or downshifting too fast, the drive wheels will lose even more traction.**
- **Allow more stopping distance under these conditions. Braking should be started sooner than on dry pavement.**
- **Allow greater following distances on slippery roads.**
- **Watch for slippery spots (glare ice). These may appear on an otherwise clear road in shaded areas. If a patch of ice is seen ahead, brake before reaching it. Try not to brake while on the ice, and avoid any sudden steering maneuvers.**
- **Do not use the cruise control (if so equipped) on slippery roads.**
- **Snow can trap dangerous exhaust gases under your vehicle. Keep snow clear of the exhaust pipe and from around your vehicle.**

## ENGINE BLOCK HEATER (if so equipped)

Engine block heaters are used to assist with cold temperature starting.

The engine block heater should be used when the outside temperature is 20°F (-7°C) or lower.

**⚠ WARNING**

- **Do not use your engine block heater with an ungrounded electrical system or a 2-pronged adapter. You can be seriously injured by an electrical shock if you use an ungrounded connection.**
- **Disconnect and properly store the engine block heater cord before starting the engine. Damage to the cord could result in an electrical shock and can cause serious injury.**
- **Use a heavy-duty 3-wire, 3-pronged extension cord rated for at least 10 A. Plug the extension cord into a Ground Fault Interrupt (GFI) protected, grounded 110-VAC outlet. Failure to use the proper extension cord or a grounded outlet can result in a fire or electrical shock and cause serious personal injury.**

To use the engine block heater:

1. Turn the engine off.
2. Open the hood and unwrap the engine block heater cord.
3. Plug the engine block heater cord into a grounded 3-wire, 3-pronged extension cord.
4. Plug the extension cord into a Ground Fault Interrupt (GFI) protected, grounded 110-volt AC (VAC) outlet.
5. The engine block heater must be plugged in for at least 2 - 4 hours, depending on outside temperatures, to properly warm the engine coolant. Use an appropriate timer to turn the engine block heater on.
6. Before starting the engine, unplug and properly store the cord to keep it away from moving parts.

## MEMO

# 6 In case of emergency


Hazard warning flasher switch . . . . . 6-2
Flat tire . . . . . 6-2
Tire Pressure Monitoring System (TPMS) . . . . . 6-2
Changing a flat tire . . . . . 6-3
Jump starting . . . . . 6-8
Push starting . . . . . 6-10
If your vehicle overheats . . . . . 6-10
Towing your vehicle . . . . . 6-11
Towing recommended by NISSAN . . . . . 6-12
Vehicle recovery (freeing a stuck vehicle) . . . . . 6-13

## HAZARD WARNING FLASHER SWITCH

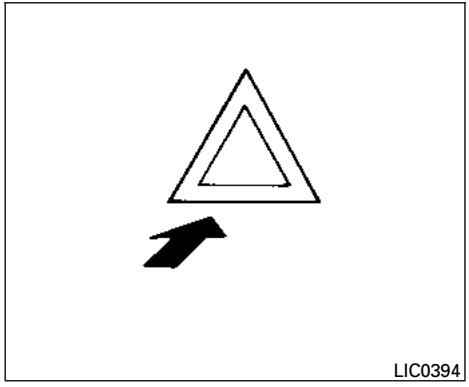


Push the switch on to warn other drivers when you must stop or park under emergency conditions. All turn signal lights flash.

**WARNING**

- **If stopping for an emergency, be sure to move the vehicle well off the road.**
- **Do not use the hazard warning flashers while moving on the highway unless unusual circumstances force you to drive so slowly that your vehicle might become a hazard to other traffic.**
- **Turn signals do not work when the hazard warning flasher lights are on.**

The flashers will operate with the ignition switch placed in any position.

**Some state laws may prohibit the use of the hazard warning flasher switch while driving.**

## FLAT TIRE

### TIRE PRESSURE MONITORING SYSTEM (TPMS)

This vehicle is equipped with the Tire Pressure Monitoring System (TPMS). It monitors tire pressure of all tires except the spare. When the low tire pressure warning light is lit, and the CHECK TIRE PRESSURE warning appears in the vehicle information display, one or more of your tires is significantly under-inflated. If equipped, the system also displays pressure of all tires (except the spare tire) on the display screen by sending a signal from a sensor that is installed in each wheel. If the vehicle is being driven with low tire pressure, the TPMS will activate and warn you of it by the low tire pressure warning light. This system will activate only when the vehicle is driven at speeds above 16 MPH (25 km/h). For more details, refer to “Warning/indicator lights and audible reminders” in the “Instruments and controls” section, “Tire pressure information” in the “Display screen, heater, air conditioner, audio and phone systems” section and “Tire Pressure Monitoring System (TPMS)” in the “Starting and driving” section.

**⚠WARNING**

- **Radio waves could adversely affect electric medical equipment. Those who use a pacemaker should contact the electric medical equipment manufacturer for the possible influences before use.**
- **If the low tire pressure warning light illuminates while driving, avoid sudden steering maneuvers or abrupt braking, reduce vehicle speed, pull off the road to a safe location and stop the vehicle as soon as possible. Driving with underinflated tires may permanently damage the tires and increase the likelihood of tire failure. Serious vehicle damage could occur and may lead to an accident and could result in serious personal injury. Check the tire pressure for all four tires. Adjust the tire pressure to the recommended COLD tire pressure shown on the Tire and Loading Information label to turn the low tire pressure warning light OFF. If you have a flat tire, replace it with a spare tire as soon as possible.**
- **When a spare tire is mounted or a wheel is replaced, tire pressure will not be indicated, the TPMS will not function and the low tire pressure warning light will flash for approximately 1 minute. The light will remain on after 1 minute. Contact your NISSAN dealer as soon as possible for tire replacement and/or system resetting.**
- **Replacing tires with those not originally specified by NISSAN could affect the proper operation of the TPMS.**
- **Do not inject any tire liquid or aerosol tire sealant into the tires, as this may cause a malfunction of the tire pressure sensors.**

## CHANGING A FLAT TIRE

If you have a flat tire, follow the instructions below:

### Stopping the vehicle

1. Safely move the vehicle off the road and away from traffic.
2. Turn on the hazard warning flashers.
3. Park on a level surface and apply the parking brake. Move the shift selector to P (Park).
4. Turn off the engine.
5. Raise the hood to warn other traffic and to signal professional road assistance personnel that you need assistance.
6. Have all passengers get out of the vehicle and stand in a safe place, away from traffic and clear of the vehicle.

**⚠WARNING**

- **Make sure the parking brake is securely applied and the automatic transmission is shifted into P (Park).**
- **Never change tires when the vehicle is on a slope, ice or slippery areas. This is hazardous.**
- **Never change tires if oncoming traffic is close to your vehicle. Wait for professional road assistance.**

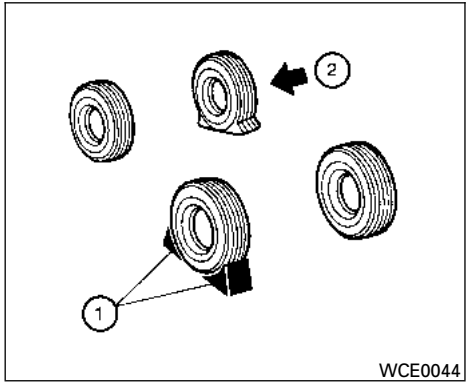


## Blocking wheels

Place suitable blocks ① at both the front and back of the wheel diagonally opposite the flat tire ② to prevent the vehicle from moving when it is jacked up.

**⚠WARNING**

**Be sure to block the wheel as the vehicle may move and result in personal injury.**

## Getting the spare tire and tools

1. Fold up the rear bench seat. Refer to “Folding the rear bench seat” in the “Safety – Seats, seat belts and supplemental restraint system” section of this manual.

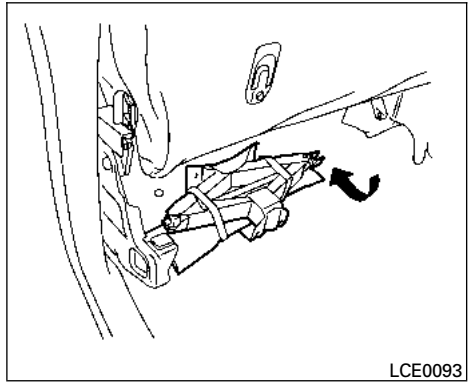


2. Unscrew and remove the jack and tool kit.

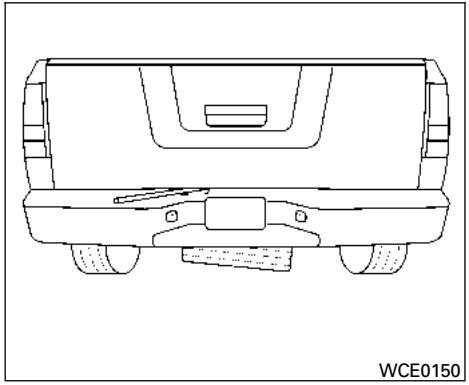


3. Assemble the two pieces of the jack rod. Find the oval-shaped opening above the middle of the license plate. Pass the T-shaped end of the jack rod through the opening and direct it toward the spare tire winch, located directly above the spare tire.

**⚠ CAUTION**

**Do not insert the jack rod straight as it is designed to be inserted at an angle as shown.**

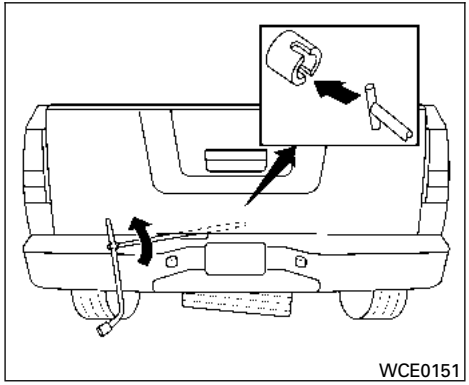


4. Fit the square end of the jack rod into the square hole of the wheel nut wrench to form a handle.
5. Seat the T-shaped end of the jack rod into the T-shaped opening of the tire winch. Apply pressure to keep the jack rod engaged in the spare tire winch and turn the jack rod counterclockwise to lower the spare tire.
6. Once the spare tire is completely lowered, reach under the vehicle, remove the retainer chain, and carefully slide the tire from under the rear of the vehicle.

**⚠ CAUTION**

**Be sure to center the spare tire suspending plate on the wheel and then lift the spare tire.**

## Jacking up vehicle and removing the damaged tire

**⚠ WARNING**

- **Never get under the vehicle while it is supported only by the jack. If it is necessary to work under the vehicle, support it with safety stands.**
- **Use only the jack provided with your vehicle to lift the vehicle. Do not use the jack provided with your vehicle on other vehicles. The jack is designed for lifting only your vehicle during a tire change.**
- **Use the correct jack-up points. Never use any other part of the vehicle for jack support.**
- **Never jack up the vehicle more than necessary.**
- **Never use blocks on or under the jack.**

- **Do not start or run the engine while vehicle is on the jack. It may cause the vehicle to move. This is especially true for vehicles with limited slip differentials.**
- **Do not allow passengers to stay in the vehicle while it is on the jack.**
- **Never run the engine with a wheel(s) off the ground. It may cause the vehicle to move.**

Always refer to the illustration for the correct placement and jack-up points for your specific vehicle model and jack type.

**Carefully read the caution label attached to the jack body and the following instructions.**

1. Loosen each wheel nut one or two turns by turning counterclockwise with the wheel nut wrench. **Do not remove the wheel nuts until the tire is off the ground.**

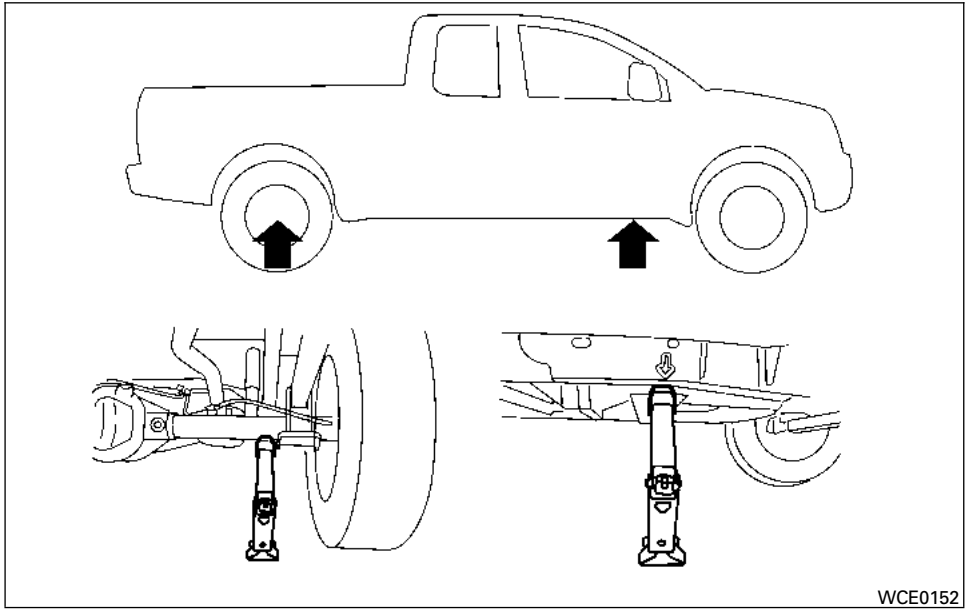


2. Place the jack directly under the jack-up point as illustrated so the top of the jack contacts the vehicle at the jack-up point. The jack-up points are indicated by stamped arrows on the side of the frame.

**The jack should be used on firm and level ground.**

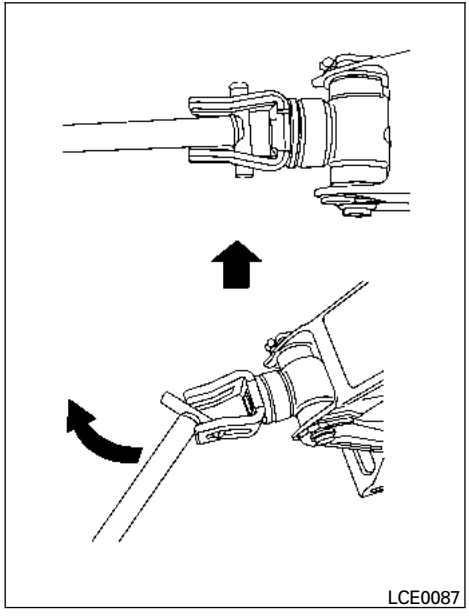


3. Install the assembled jack rod into the jack as shown.
4. To lift the vehicle, securely hold the jack lever and rod. Carefully raise the vehicle until the tire clears the ground.
5. Remove the wheel nuts and then remove the tire.

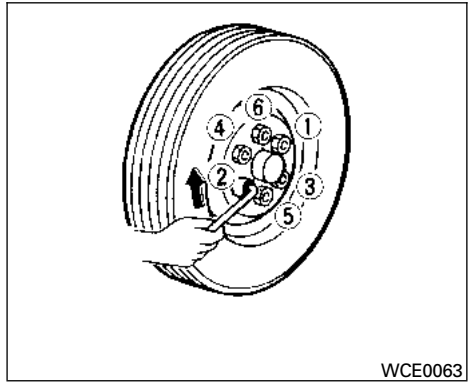


## Installing the spare tire

**The spare tire is designed for emergency use. See specific instructions under the heading "Wheels and tires" in the "Maintenance and do-it-yourself" section of this manual.**

1. Clean any mud or dirt from the surface between the wheel and hub.
2. Carefully put the spare tire on and tighten the wheel nuts finger tight.
3. With the wheel nut wrench, tighten wheel nuts alternately and evenly as illustrated until they are tight.
4. Lower the vehicle slowly until the tire touches the ground. Then, with the wheel nut wrench, tighten the wheel nuts securely in the sequence illustrated. Lower the vehicle completely.

**⚠ WARNING**

- **Incorrect wheel nuts or improperly tightened wheel nuts can cause the wheel to become loose or come off. This could cause an accident.**
- **Do not use oil or grease on the wheel studs or nuts. This could cause the nuts to become loose.**
- **Retighten the wheel nuts when the vehicle has been driven for 600 miles (1,000 km) (also in cases of a flat tire, etc.).**

**As soon as possible, tighten the wheel nuts to the specified torque with a torque wrench.**

**Wheel nut tightening torque:**

**98 ft-lb (133 N·m)**

**The wheel nuts must be kept tightened to specification at all times. It is recommended that wheel nuts be tightened to specifications at each lubrication interval.**

**Adjust tire pressure to the COLD pressure.**

**COLD pressure: After vehicle has been parked for three hours or more or driven less than 1 mi. (1.6 km).**

**COLD tire pressures are shown on the Tire and Loading Information label affixed to the driver side center pillar.**

**After adjusting tire pressure to the COLD tire pressure, the display (if so equipped) of the tire pressure information may show higher pressure than the COLD tire pressure after the vehicle has been driven more than 1 mi. (1.6 km). This is because the tire pressure increases as the tire temperature rises. This does not indicate a system malfunction.**

5. Securely store the flat tire and jacking equipment in the vehicle.

**WARNING**

- **Always make sure that the spare tire and jacking equipment are properly secured after use. Such items can become dangerous projectiles in an accident or sudden stop.**
- **The spare tire is designed for emergency use. See specific instructions under the heading "Wheels and tires" in the "Maintenance and do-it-yourself" section of this manual.**

To start your engine with a booster battery, the instructions and precautions below must be followed.

**WARNING**

- **If done incorrectly, jump starting can lead to a battery explosion, resulting in severe injury or death. It could also damage your vehicle.**
- **Explosive hydrogen gas is always present in the vicinity of the battery. Keep all sparks and flames away from the battery.**
- **Do not allow battery fluid to come into contact with eyes, skin, clothing or painted surfaces. Battery fluid is a corrosive sulfuric acid solution which can cause severe burns. If the fluid should come into contact with anything, immediately flush the contacted area with water.**
- **Keep battery out of the reach of children.**
- **The booster battery must be rated at 12 volts. Use of an improperly rated battery can damage your vehicle.**

- **Whenever working on or near a battery, always wear suitable eye protectors (for example, goggles or industrial safety spectacles) and remove rings, metal bands, or any other jewelry. Do not lean over the battery when jump starting.**
- **Do not attempt to jump start a frozen battery. It could explode and cause serious injury.**

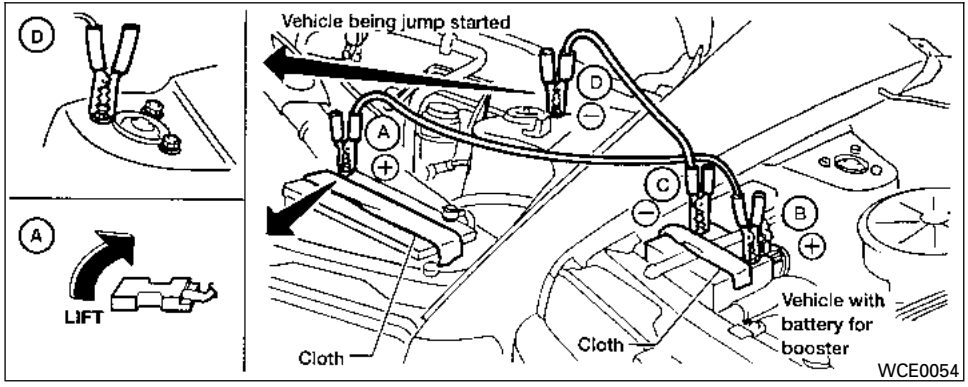


**⚠WARNING**

**Always follow the instructions below. Failure to do so could result in damage to the charging system and cause personal injury.**

1. If the booster battery is in another vehicle, position the two vehicles to bring their batteries near each other.

   **Do not allow the two vehicles to touch.**

2. Apply the parking brake. Move the shift selector to P (Park). Switch off all unnecessary electrical systems (lights, heater, air conditioner, etc.).
3. Remove vent caps on the battery (if so equipped). Cover the battery with an old cloth to reduce explosion hazard.
4. Connect jumper cables in the sequence illustrated (Ⓐ, Ⓑ, Ⓒ, Ⓓ).

**⚠ CAUTION**

- **Always connect positive (+) to positive (+) and negative (−) to body ground (for example, strut mounting bolt, engine lift bracket, etc.) — not to the battery.**
- **Make sure the jumper cables do not touch moving parts in the engine compartment and that the cable clamps do not contact any other metal.**

5. Start the engine of the booster vehicle and let it run for a few minutes.
6. Keep the engine speed of the booster vehicle at about 2,000 RPM, and start the engine of the vehicle being jump started.

**⚠ CAUTION**

**Do not keep the starter motor engaged for more than 10 seconds. If the engine does not start right away, turn the key off and wait 3 to 4 seconds before trying again.**

7. After starting the engine, carefully disconnect the negative cable and then the positive cable.
8. Replace the vent caps (if so equipped). Be sure to dispose of the cloth used to cover the vent holes as it may be contaminated with corrosive acid.

**⚠ WARNING**

**Do not push start this vehicle. The three-way catalyst may be damaged.**

**⚠ CAUTION**

**Automatic transmission models cannot be push-started or tow-started. Attempting to do so may cause transmission damage.**



**⚠ WARNING**

- **Do not continue to drive if your vehicle overheats. Doing so could cause engine damage or a vehicle fire.**
- **To avoid the danger of being scalded, never remove the radiator or coolant reservoir cap while the engine is still hot. When the radiator or coolant reservoir cap is removed, pressurized hot water will spurt out, possibly causing serious injury.**
- **Do not open the hood if steam is coming out.**

If your vehicle is overheating (indicated by an extremely high temperature gauge reading and the illumination of the engine oil pressure/engine coolant temperature high indicator light), or if you feel a lack of engine power, detect abnormal noise, etc. take the following steps.

1. Move the vehicle safely off the road, apply the parking brake and move the shift selector to P (Park).

   **Do not stop the engine.**

2. Turn off the air conditioner. Open all the windows, move the heater or air conditioner temperature control to maximum hot and fan control to high speed.

3. Get out of the vehicle. Look and listen for steam or coolant escaping from the radiator before opening the hood. (If steam or coolant is escaping, turn off the engine.) Do not open the hood further until no steam or coolant can be seen.
4. Open the engine hood.

**WARNING**

**If steam or water is coming from the engine, stand clear to prevent getting burned.**

5. Visually check drive belts for damage or looseness. Also check if the cooling fan is running. The radiator hoses and radiator should not leak water. If coolant is leaking, the water pump belt is missing or loose, or the cooling fan does not run, stop the engine.

**WARNING**

**Be careful not to allow your hands, hair, jewelry or clothing to come into contact with, or get caught in, engine belts or the engine cooling fan. The engine cooling fan can start at any time.**

6. After the engine cools down, check the coolant level in the engine coolant reservoir tank with the engine running. Add coolant to the engine coolant reservoir tank if necessary. Have your vehicle repaired at a NISSAN dealer.

When towing your vehicle, all State (Provincial in Canada) and local regulations for towing must be followed. Incorrect towing equipment could damage your vehicle. Towing instructions are available from a NISSAN dealer. Local service operators are generally familiar with the applicable laws and procedures for towing. To assure proper towing and to prevent accidental damage to your vehicle, NISSAN recommends having a service operator tow your vehicle. It is advisable to have the service operator carefully read the following precautions:

**WARNING**

- **Never ride in a vehicle that is being towed.**
- **Never get under your vehicle after it has been lifted by a tow truck.**

**CAUTION**

- **When towing, make sure that the transmission, axles, steering system and powertrain are in working condition. If any of these conditions apply, dollies or a flatbed tow truck must be used.**
- **Always attach safety chains before towing.**

For information about towing your vehicle behind a recreational vehicle (RV), refer to “Flat towing” in the “Technical and consumer information” section of this manual.

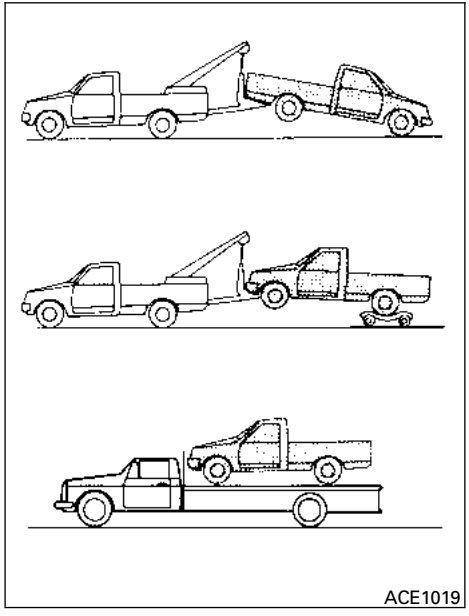


TOWING RECOMMENDED BY NISSAN

## Two-wheel drive models

NISSAN recommends that your vehicle be towed with the driving (rear) wheels off the ground or place the vehicle on a flat bed truck as illustrated.

**⚠ CAUTION**

- **Never tow automatic transmission models with the rear wheels on the ground or four wheels on the ground (forward or backward), as this may cause serious and expensive damage to the transmission. If it is necessary to tow the vehicle with the front wheels raised always use towing dollies under the rear wheels.**
- **When towing automatic transmission models with the front wheels on the ground or on towing dollies:**
  - **Place the ignition switch in the OFF position and secure the steering wheel in a straight-ahead position with a rope or similar device. Never secure the steering wheel by placing the ignition switch in the LOCK position. This may cause damage to the lock mechanism (if so equipped).**

If the speed or distance must necessarily be greater, remove the propeller shaft before towing to prevent damage to the transmission.

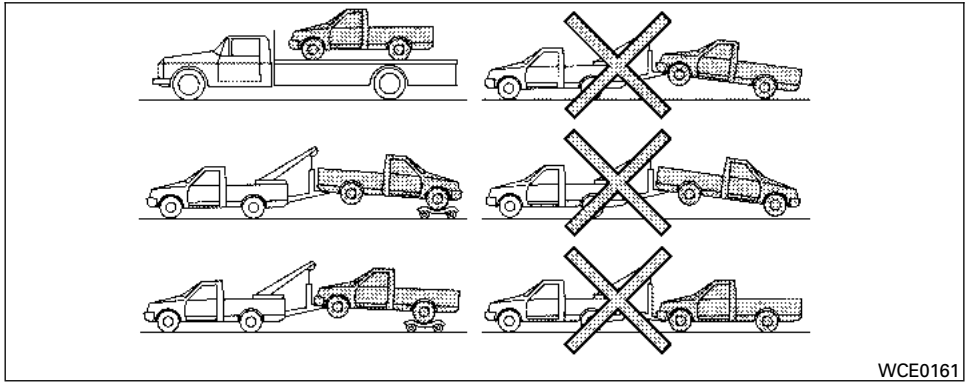


## Four-wheel drive models

NISSAN recommends that towing dollies be used when towing your vehicle or place the vehicle on a flat bed truck as illustrated.

**⚠ CAUTION**

**Never tow 4WD models with any of the wheels on the ground as this may cause serious and expensive damage to the transfer case and transmission.**

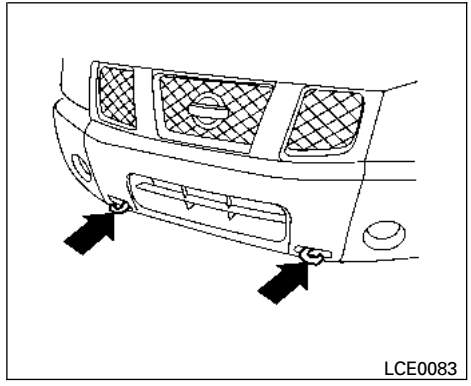


**Hooks (if so equipped)**

# VEHICLE RECOVERY (freeing a stuck vehicle)

## Pulling a stuck vehicle

**⚠ WARNING**

**To avoid vehicle damage, serious personal injury or death when recovering a stuck vehicle:**

- **Contact a professional towing service to recover the vehicle if you have any questions regarding the recovery procedure.**

- **Attach recovery devices only to main structural members of the vehicle or the recovery hooks.**
- **Do not use the vehicle tie-downs to tow or free a stuck vehicle.**
- **Only use devices specifically designed for vehicle recovery and follow the manufacturer's instructions.**
- **Always pull the recovery device straight out from the front of the vehicle. Never pull at an angle.**
- **Route recovery devices so they do not touch any part of the vehicle except the attachment point.**

If your vehicle is stuck in sand, snow, mud, etc., use a tow strap or other device designed specifically for vehicle recovery. Always follow the manufacturer's instructions for the recovery device.

Do not use the tie-down hooks for towing or vehicle recovery.

## Rocking a stuck vehicle

**WARNING**

- **Stand clear of a stuck vehicle.**
- **Do not spin your tires at high speed. This could cause them to explode and result in serious injury. Parts of your vehicle could also overheat and be damaged.**

If your vehicle is stuck in sand, snow, mud, etc., use the following procedure:

1. Turn off the Vehicle Dynamic Control (VDC) system.
2. Activate the Electronic Locking Rear Differential (E-Lock) System (if so equipped).
3. Make sure the area in front and behind the vehicle is clear of obstructions.
4. Turn the steering wheel right and left to clear an area around the front tires.
5. Slowly rock the vehicle forward and backward.
   - Shift back and forth between R (Reverse) and D (Drive).
   - Apply the accelerator as little as possible to maintain the rocking motion.
   - Release the accelerator pedal before shifting between R and D.
   - Do not spin the tires above 35 MPH (55 km/h) or above 12 MPH (20 km/h) if the E–Lock System is engaged.
6. If the vehicle cannot be freed after a few tries, contact a professional towing service to remove the vehicle.

# 7 Appearance and care


Cleaning exterior . . . . . 7-2
Washing . . . . . 7-2
Waxing . . . . . 7-2
Removing spots . . . . . 7-3
Underbody . . . . . 7-3
Glass . . . . . 7-3
Aluminum alloy wheels . . . . . 7-3
Chrome parts . . . . . 7-3
Tire dressings . . . . . 7-3
Cleaning interior . . . . . 7-4
Air fresheners . . . . . 7-4
Floor mats . . . . . 7-4
Seat belts . . . . . 7-5
Corrosion protection . . . . . 7-5
Most common factors contributing to vehicle corrosion . . . . . 7-5
Environmental factors influence the rate of corrosion . . . . . 7-5
To protect your vehicle from corrosion . . . . . 7-6

# CLEANING EXTERIOR

In order to maintain the appearance of your vehicle, it is important to take proper care of it.

To protect the paint surfaces, please wash your vehicle as soon as you can:

- after a rainfall to prevent possible damage from acid rain.
- after driving on coastal roads.
- when contaminants such as soot, bird droppings, tree sap, metal particles or bugs get on the paint surface.
- when dust or mud builds up on the surface.

Whenever possible, store or park your vehicle inside a garage or in a covered area.

When it is necessary to park outside, park in a shady area or protect the vehicle with a body cover.

**Be careful not to scratch the paint surface when putting on or removing the body cover.**

## WASHING

Wash dirt off with a wet sponge and plenty of water. Clean the vehicle thoroughly using a mild soap, a special vehicle soap or general purpose dishwashing liquid mixed with clean, lukewarm (never hot) water.

**⚠ CAUTION**

- **Do not use car washes that use acid in the detergent. Some car washes, especially brushless ones, use some acid for cleaning. The acid may react with some plastic vehicle components, causing them to crack. This could affect their appearance, and also could cause them not to function properly. Always check with your car wash to confirm that acid is not used.**
- **Do not wash the vehicle with strong household soap, strong chemical detergents, gasoline or solvents.**
- **Do not wash the vehicle in direct sunlight or while the vehicle body is hot, as the surface may become water-spotted.**
- **Avoid using tight-napped or rough cloths, such as washing mitts. Care must be taken when removing caked-on dirt or other foreign substances so the paint surface is not scratched or damaged.**

Rinse the vehicle thoroughly with plenty of clean water.

Inside flanges, seams and folds on the doors, hatches and hood are particularly vulnerable to the effects of road salt. Therefore, these areas must be cleaned regularly. Take care that the drain holes in the lower edge of the door are open. Spray water under the body and in the wheel wells to loosen the dirt and wash away road salt.

A damp chamois can be used to dry the vehicle to avoid water spots.

## WAXING

Regular waxing protects the paint surface and helps retain new vehicle appearance. Polishing is recommended to remove built-up wax residue and to avoid a weathered appearance before re-applying wax.

A NISSAN dealer can assist you in choosing the proper product.

- Wax your vehicle only after a thorough washing. Follow the instructions supplied with the wax.
- Do not use a wax containing any abrasives, cutting compounds or cleaners that may damage the vehicle finish.

Machine compounding or aggressive polishing on a base coat/clear coat paint finish may dull the finish or leave swirl marks.

## REMOVING SPOTS

Remove tar and oil spots, industrial dust, insects, and tree sap as quickly as possible from the surface of the paint to avoid lasting damage or staining. Special cleaning products are available at a NISSAN dealer or any automotive accessory store.

## UNDERBODY

In areas where road salt is used in winter, it is necessary to clean the underbody regularly in order to prevent dirt and salt from building up and causing the acceleration of corrosion on the underbody and suspension. Before the winter period and again in the spring, the underseal must be checked and, if necessary, retreated.

## GLASS

Use glass cleaner to remove smoke and dust film from the glass surfaces. It is normal for glass to become coated with a film after the vehicle is parked in the hot sun. Glass cleaner and a soft cloth will easily remove this film.

**⚠CAUTION**

**When cleaning the inside of the windows, do not use sharp-edged tools, abrasive cleaners or chlorine-based disinfectant cleaners. They could damage the electrical conductors, radio antenna elements or rear window defroster elements.**

## ALUMINUM ALLOY WHEELS

Wash the wheels regularly with a sponge dampened in a mild soap solution, especially during winter months in areas where road salt is used. If not removed, road salt can discolor the wheels.

**⚠CAUTION**

**Follow the directions below to avoid staining or discoloring the wheels:**

- **Do not use a cleaner that uses strong acid or alkali contents to clean the wheels.**
- **Do not apply wheel cleaners to the wheels when they are hot. The wheel temperature should be the same as ambient temperature.**
- **Rinse the wheel to completely remove the cleaner within 15 minutes after the cleaner is applied.**

## CHROME PARTS

Clean all chrome parts regularly with a non-abrasive chrome polish to maintain the finish.

## TIRE DRESSINGS

NISSAN does not recommend the use of tire dressings. Tire manufacturers apply a coating to the tires to help reduce discoloration of the rubber. If a tire dressing is applied to the tires, it may react with the coating and form a compound. This compound may come off the tire while driving and stain the vehicle paint.

If you choose to use a tire dressing, take the following precautions:

- Use a water-based tire dressing. The coating on the tire dissolves more easily than with an oil-based tire dressing.
- Apply a light coat of tire dressing to help prevent it from entering the tire tread/grooves (where it would be difficult to remove).
- Wipe off excess tire dressing using a dry towel. Make sure the tire dressing is completely removed from the tire tread/grooves.
- Allow the tire dressing to dry as recommended by the tire dressing manufacturer.

Occasionally remove loose dust from the interior trim, plastic parts and seats using a vacuum cleaner or soft bristled brush. Wipe the vinyl and leather surfaces with a clean, soft cloth dampened in mild soap solution, then wipe clean with a dry, soft cloth.

Regular care and cleaning is required in order to maintain the appearance of the leather.

Before using any fabric protector, read the manufacturer's recommendations. Some fabric protectors contain chemicals that may stain or bleach the seat material.

Use a cloth dampened only with water to clean the meter and gauge lens.

**⚠WARNING**

**Do not use water or acidic cleaners (hot steam cleaners) on the seat. This can damage the seat or occupant classification sensor. This can also affect the operation of the air bag system and result in serious personal injury.**

**⚠CAUTION**

- **Never use benzine, thinner or any similar material.**
- **Small dirt particles can be abrasive and damaging to leather surfaces and should be removed promptly. Do not use saddle soap, car waxes, polishes, oils, cleaning fluids, solvents, detergents or ammonia-based cleaners as they may damage the leather's natural finish.**
- **Never use fabric protectors unless recommended by the manufacturer.**
- **Do not use glass or plastic cleaner on meter or gauge lens covers. It may damage the lens cover.**

## AIR FRESHENERS

Most air fresheners use a solvent that could affect the vehicle interior. If you use an air freshener, take the following precautions:

- Hanging-type air fresheners can cause permanent discoloration when they contact vehicle interior surfaces. Place the air freshener in a location that allows it to hang free and not contact an interior surface.
- Liquid-type air fresheners typically clip on the vents. These products can cause immediate damage and discoloration when spilled on interior surfaces.

Carefully read and follow the manufacturer's instructions before using the air fresheners.

## FLOOR MATS

**⚠WARNING**

**To avoid potential pedal interference that may result in a collision or injury:**

- **NEVER place a floor mat on top of another floor mat in the driver front position.**
- **Use only genuine NISSAN floor mats specifically designed for use in your vehicle model. See your NISSAN dealer for more information.**
- **Properly position the mats in the floorwell using the floor mat positioning aid. See "Floor mat positioning aid" in this section.**

The use of genuine NISSAN floor mats can extend the life of your vehicle carpet and make it easier to clean the interior. Mats should be maintained with regular cleaning and replaced if they become excessively worn.

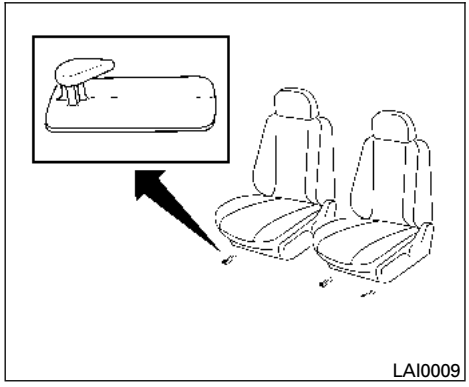


## Floor mat positioning aid

This vehicle includes two driver's side front floor mat brackets and one passenger's side front floor mat bracket to help keep your floor mats in place. Genuine NISSAN floor mats have been specially designed for your vehicle model. The driver's side floor mat has two grommet holes incorporated in it and the passenger's side has one grommet hole. Position each mat by placing the floor mat bracket hook through the floor mat grommet holes while centering the mat in the floorwell.

Periodically check to make certain the mats are properly positioned.

## SEAT BELTS

The seat belts can be cleaned by wiping them with a sponge dampened in a mild soap solution. Allow the belts to dry completely in the shade before using them. See "Seat belt maintenance" in the "Safety – Seats, seat belts and supplemental restraint system" section of this manual.

**⚠WARNING**

**Do not allow wet seat belts to roll up in the retractor. NEVER use bleach, dye or chemical solvents to clean the seat belts, since these materials may severely weaken the seat belt webbing.**

## MOST COMMON FACTORS CONTRIBUTING TO VEHICLE CORROSION

- The accumulation of moisture-retaining dirt and debris in body panel sections, cavities, and other areas.
- Damage to paint and other protective coatings caused by gravel and stone chips or minor traffic accidents.

## ENVIRONMENTAL FACTORS INFLUENCE THE RATE OF CORROSION

### Moisture

Accumulation of sand, dirt and water on the vehicle body underside can accelerate corrosion. Wet floor coverings will not dry completely inside the vehicle and should be removed for drying to avoid floor panel corrosion.

### Relative humidity

Corrosion will be accelerated in areas of high relative humidity, especially those areas where the temperatures stay above freezing and where atmospheric pollution exists and road salt is used.

### Temperature

High temperatures accelerate the rate of corrosion to those parts which are not well ventilated.

### Air pollution

Industrial pollution, the presence of salt in the air in coastal areas, or heavy road salt use accelerates the corrosion process. Road salt also accelerates the disintegration of paint surfaces.

## TO PROTECT YOUR VEHICLE FROM CORROSION

- Wash and wax your vehicle often to keep the vehicle clean.
- Always check for minor damage to the paint and repair it as soon as possible.
- Keep drain holes at the bottom of the doors open to avoid water accumulation.
- Check the underbody for accumulation of sand, dirt or salt. If present, wash with water as soon as possible.

**⚠ CAUTION**

- **NEVER remove dirt, sand or other debris from the passenger compartment by washing it out with a hose. Remove dirt with a vacuum cleaner or broom.**
- **Never allow water or other liquids to come in contact with electronic components inside the vehicle as this may damage them.**

Chemicals used for road surface de-icing are extremely corrosive. They accelerate corrosion and deterioration of underbody components such as the exhaust system, fuel and brake lines, brake cables, floor pan and fenders.

**In winter, the underbody must be cleaned periodically.**

For additional protection against rust and corrosion, which may be required in some areas, consult a NISSAN dealer.

# 8 Maintenance and do-it-yourself


Maintenance requirements . . . . . 8-2
General maintenance . . . . . 8-2
Explanation of general maintenance items . . . . . 8-2
Maintenance precautions . . . . . 8-5
Engine compartment check locations . . . . . 8-6
Engine cooling system . . . . . 8-7
Checking engine coolant level . . . . . 8-8
Changing engine coolant . . . . . 8-8
Engine oil . . . . . 8-9
Checking engine oil level . . . . . 8-9
Changing engine oil . . . . . 8-10
Changing engine oil filter . . . . . 8-11
5-speed automatic transmission fluid . . . . . 8-11
Power steering fluid . . . . . 8-12
Brake fluid . . . . . 8-12
Brake fluid . . . . . 8-13
Windshield-washer fluid . . . . . 8-13
Windshield-washer fluid reservoir . . . . . 8-13
Battery . . . . . 8-14
Jump starting . . . . . 8-15
Variable voltage control system . . . . . 8-16
Drive belt . . . . . 8-16
Spark plugs . . . . . 8-17
Replacing spark plugs . . . . . 8-17
Air cleaner . . . . . 8-18
In-cabin microfilter (if so equipped) . . . . . 8-18
Windshield wiper blades . . . . . 8-20
Cleaning . . . . . 8-20
Replacing . . . . . 8-20
Brakes . . . . . 8-21
Fuses . . . . . 8-22
Engine compartment . . . . . 8-22
Passenger compartment . . . . . 8-24
Battery replacement . . . . . 8-26
Keyfob (if so equipped) . . . . . 8-26
Lights . . . . . 8-27
Headlights . . . . . 8-27
Fog lights (if so equipped) . . . . . 8-28
Exterior and interior lights . . . . . 8-29
Wheels and tires . . . . . 8-33
Tire pressure . . . . . 8-33
Tire labeling . . . . . 8-37
Types of tires . . . . . 8-39
Tire chains . . . . . 8-40
Changing wheels and tires . . . . . 8-40

## MAINTENANCE REQUIREMENTS

Your NISSAN has been designed to have minimum maintenance requirements with long service intervals to save you both time and money. However, some day-to-day and regular maintenance is essential to maintain your NISSAN's good mechanical condition, as well as its emissions and engine performance.

It is the owner's responsibility to make sure that the scheduled maintenance, as well as general maintenance, is performed.

As the vehicle owner, you are the only one who can ensure that your vehicle receives proper maintenance. You are a vital link in the maintenance chain.

### Scheduled maintenance

For your convenience, both required and optional scheduled maintenance items are described and listed in your "NISSAN Service and Maintenance Guide". You must refer to that guide to ensure that necessary maintenance is performed on your NISSAN at regular intervals.

### General maintenance

General maintenance includes those items which should be checked during normal day-to-day operation. They are essential for proper vehicle operation. It is your responsibility to perform these maintenance procedures regularly as prescribed.

Performing general maintenance checks requires minimal mechanical skill and only a few general automotive tools.

These checks or inspections can be done by you, a qualified technician, or, if you prefer, a NISSAN dealer.

### Where to go for service

If maintenance service is required or your vehicle appears to malfunction, have the systems checked and corrected by a NISSAN dealer.

NISSAN technicians are well-trained specialists who are kept up-to-date with the latest service information through technical bulletins, service tips, and in-dealership training programs. They are completely qualified to work on NISSAN vehicles **before** they work on your vehicle, rather than after they have worked on it.

You can be confident that a NISSAN dealer's service department performs the best job to meet the maintenance requirements on your vehicle — in a reliable and economical way.

## GENERAL MAINTENANCE

During the normal day-to-day operation of the vehicle, general maintenance should be performed regularly as prescribed in this section. If you detect any unusual sounds, vibrations or smells, be sure to check for the cause or have a NISSAN dealer do it promptly. In addition, you should notify a NISSAN dealer if you think that repairs are required.

When performing any checks or maintenance work, closely observe the "Maintenance precautions" later in this section.

## EXPLANATION OF GENERAL MAINTENANCE ITEMS

**Additional information on the following items with " * " is found later in this section.**

### Outside the vehicle

The maintenance items listed here should be performed from time to time, unless otherwise specified.

**Doors and engine hood** Check that the doors and engine hood operate properly. Also ensure that all latches lock securely. Lubricate hinges, latches, latch pins, rollers and links as necessary. Make sure that the secondary latch keeps the hood from opening when the primary latch is released.

When driving in areas using road salt or other corrosive materials, check lubrication frequently.

**Lights*** Clean the headlights on a regular basis. Make sure that the headlights, stop lights, tail lights, turn signal lights, and other lights are all operating properly and installed securely. Also check headlight aim.

**Road wheel nuts (lug nuts)*** When checking the tires, make sure no wheel nuts are missing, and check for any loose wheel nuts. Tighten if necessary.

**Tire rotation*** Tires should be rotated every 7,500 miles (12,000 km).

**Tires*** Check the pressure with a gauge often and always prior to long distance trips. If necessary, adjust the pressure in all tires, including the spare, to the pressure specified. Check carefully for damage, cuts or excessive wear.

**Tire Pressure Monitoring System (TPMS) transmitter components** Replace the TPMS transmitter grommet seal, valve core and cap when the tires are replaced due to wear or age.

**Wheel alignment and balance** If the vehicle should pull to either side while driving on a straight and level road, or if you detect uneven or abnormal tire wear, there may be a need for wheel alignment. If the steering wheel or seat vibrates at normal highway speeds, wheel balancing may be needed.

- For additional information regarding tires, refer to “Important Tire Safety Information” (US) or “Tire Safety Information” (Canada) in the Warranty Information Booklet.

**Windshield** Clean the windshield on a regular basis. Check the windshield at least every six months for cracks or other damage. Have a damaged windshield repaired by a qualified repair facility.

**Windshield wiper blades*** Check for cracks or wear if they do not wipe properly.

## Inside the vehicle

The maintenance items listed here should be checked on a regular basis, such as when performing periodic maintenance, cleaning the vehicle, etc.

**Additional information on the following items with an “*” is found later in this section.**

**Accelerator pedal** Check the pedal for smooth operation and make sure the pedal does not bind or require uneven effort. Keep the floor mat away from the pedal.

**Automatic transmission P (Park) position mechanism** On a fairly steep hill check that your vehicle is held securely with the shift selector in the P (Park) position without applying any brakes.

**Brake pedal** Check the pedal for smooth operation. If the brake pedal suddenly goes down further than normal, the pedal feels spongy or the vehicle seems to take longer to stop, see a NISSAN dealer immediately. Keep the floor mat away from the pedal.

**Brakes** Check that the brakes do not pull the vehicle to one side when applied.

**Parking brake** Check the parking brake operation regularly. The vehicle should be securely held on a fairly steep hill with only the parking brake applied. If the parking brake needs adjustment, see a NISSAN dealer.

**Seats** Check seat position controls such as seat adjusters, seatback recliner, etc. to ensure they operate smoothly and all latches lock securely in every position. Check that the head restraints move up and down smoothly and the locks (if so equipped) hold securely in all latched positions.

**Seat belts** Check that all parts of the seat belt system (for example, buckles, anchors, adjusters and retractors) operate properly and smoothly, and are installed securely. Check the belt webbing for cuts, fraying, wear or damage.

**Steering wheel** Check for changes in the steering system, such as excessive freeplay, hard steering or strange noises.

**Warning lights and chimes** Make sure all warning lights and chimes are operating properly.

**Windshield wiper and washer*** Check that the wipers and washer operate properly and that the wipers do not streak.

**Windshield defroster** Check that the air comes out of the defroster outlets properly and in sufficient quantity when operating the heater or air conditioner.

## Under the hood and vehicle

The maintenance items listed here should be checked periodically (for example, each time you check the engine oil or refuel).

**Battery* (for seviceable batteries)** Check th e fluid level in each cell. It should be between the MAX and MIN lines. Vehicles operated in high temperatures or under severe conditions require frequent checks of the battery fluid level.

**NOTE:**

**Care should be taken to avoid situations that can lead to potential battery discharge and potential no-start conditions such as: 1. Installation or extended use of electronic accessories that consume battery power when the engine is not running (Phone chargers, GPS, DVD players, etc.) 2. Vehicle is not driven regularly and/or only driven short distances. In these cases, the battery may need to be charged to maintain battery health.**

**Brake fluid level*** Make sure that the brake fluid level is between the MIN and MAX lines on the reservoir.

**Engine coolant level*** Check the coolant level when the engine is cold.

**Engine drive belts*** Make sure the drive belts are not frayed, worn, cracked or oily.

**Engine oil level*** Check the level after parking the vehicle on a level surface with the engine off. Wait more than 10 minutes for the oil to drain back into the oil pan.

**Exhaust system** Make sure there are no loose supports, cracks or holes. If the sound of the exhaust seems unusual or there is a smell of exhaust fumes, immediately have the exhaust system inspected by a NISSAN dealer. See the carbon monoxide warning in the “Starting and driving” section of this manual.

**Fluid leaks** Check under the vehicle for fuel, oil, water or other fluid leaks after the vehicle has been parked for a while. Water dripping from the air conditioner after use is normal. If you should notice any leaks or if gasoline fumes are evident, check for the cause and have it corrected immediately.

**Power steering fluid level* and lines** Check the level when the fluid is cold, with the engine off. Check the lines for proper attachment, leaks, cracks, etc.

**Radiator and hoses** Check the front of the radiator and clean off any dirt, insects, leaves, etc., that may have accumulated. Make sure the hoses have no cracks, deformation, rot or loose connections.

**Underbody** The underbody is frequently exposed to corrosive substances such as those used on icy roads or to control dust. It is very important to remove these substances from the underbody, otherwise rust may form on the floor pan, frame, fuel lines and exhaust system. At the end of winter, the underbody should be thoroughly flushed with plain water, in those areas where mud and dirt may have accumulated. See the “Appearance and care” section of this manual.

**Windshield-washer fluid*** Check that there is adequate fluid in the reservoir.

## MAINTENANCE PRECAUTIONS

When performing any inspection or maintenance work on your vehicle, always take care to prevent serious accidental injury to yourself or damage to the vehicle. The following are general precautions which should be closely observed.

**⚠ WARNING**

- **Park the vehicle on a level surface, apply the parking brake securely and block the wheels to prevent the vehicle from moving. Move the shift selector to P (Park)**
- **Be sure the ignition switch is in the OFF or LOCK position when performing any parts replacement or repairs.**
- **If you must work with the engine running, keep your hands, clothing, hair and tools away from moving fans, belts and any other moving parts.**
- **It is advisable to secure or remove any loose clothing and remove any jewelry, such as rings, watches, etc. before working on your vehicle.**
- **Always wear eye protection whenever you work on your vehicle.**
- **If you must run the engine in an enclosed space such as a garage, be sure there is proper ventilation for exhaust gases to escape.**
- **Never get under the vehicle while it is supported only by a jack. If it is necessary to work under the vehicle, support it with safety stands.**
- **Keep smoking materials, flame and sparks away from the fuel tank and battery.**
- **On gasoline engine models, the fuel filter or fuel lines should be serviced by a NISSAN dealer because the fuel lines are under high pressure even when the engine is off.**

**⚠ CAUTION**

- **Do not work under the hood while the engine is hot. Turn the engine off and wait until it cools down.**
- **Avoid contact with used engine oil and coolant. Improperly disposed engine oil, engine coolant and/or other vehicle fluids can damage the environment. Always conform to local regulations for disposal of vehicle fluid.**
- **Never leave the engine or automatic transmission related component harnesses disconnected while the ignition switch is in the ON position.**
- **Never connect or disconnect the battery or any transistorized component while the ignition switch is in the ON position.**

This “Maintenance and do-it-yourself” section gives instructions regarding only those items which are relatively easy for an owner to perform.

A genuine NISSAN service manual is also available. See “Owner’s Manual/Service Manual order information” in the “Technical and consumer information” section of this manual.

You should be aware that incomplete or improper servicing may result in operating difficulties or excessive emissions, and could affect warranty coverage. **If in doubt about any servicing, have it done by a NISSAN dealer.**

## ENGINE COMPARTMENT CHECK LOCATIONS

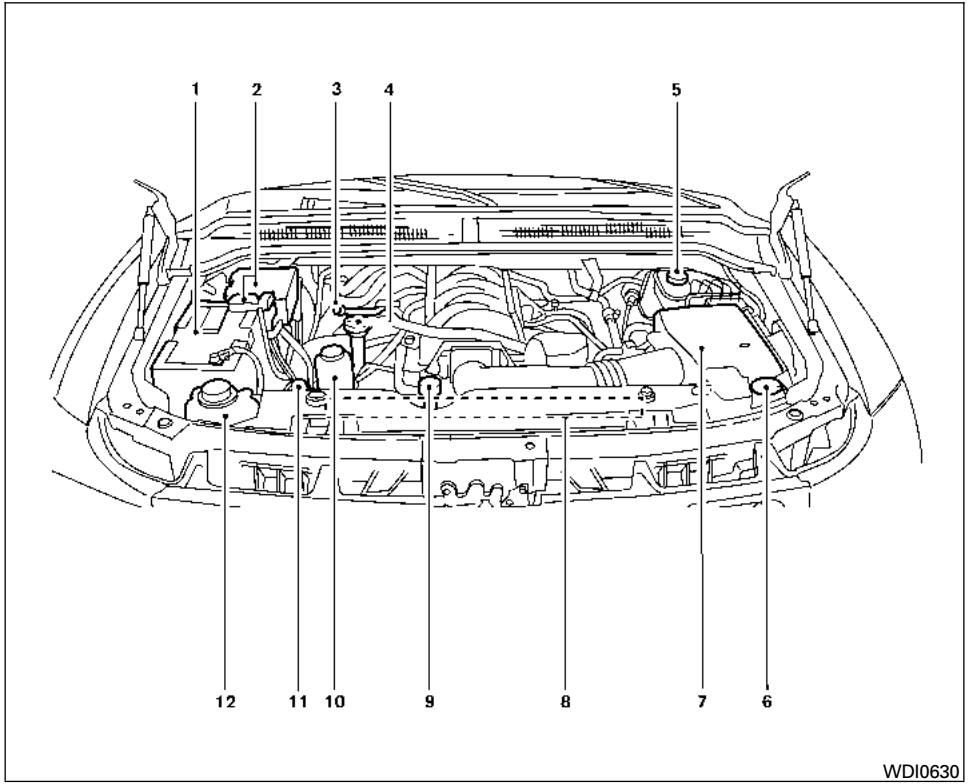


1. Battery
2. Fuse/fusible link box
3. Transmission dipstick
4. Engine oil filler cap
5. Brake fluid reservoir
6. Windshield-washer fluid reservoir
7. Air cleaner
8. Drive belt location
9. Radiator cap
10. Power steering fluid reservoir
11. Engine oil dipstick
12. Engine coolant reservoir

**NOTE:**

**Engine cover removed for clarity.**

## ENGINE COOLING SYSTEM

The engine cooling system is filled at the factory with a pre-diluted mixture of 50% Genuine NISSAN Long Life Antifreeze/Coolant (blue) and 50% water to provide year-round anti-freeze and coolant protection. The antifreeze solution contains rust and corrosion inhibitors. Additional engine cooling system additives are not necessary.

**⚠WARNING**

- **Never remove the radiator or coolant reservoir cap when the engine is hot. Wait until the engine and radiator cool down. Serious burns could be caused by high pressure fluid escaping from the radiator. See precautions in "If your vehicle overheats" found in the "In case of emergency" section of this manual.**
- **The radiator is equipped with a pressure type radiator cap. To prevent engine damage, use only a genuine NISSAN radiator cap.**

**⚠CAUTION**

- **Never use any cooling system additives such as radiator sealer. Additives may clog the cooling system and cause damage to the engine, transmission and/or cooling system.**
- **When adding or replacing coolant, be sure to use only Genuine NISSAN Long Life Antifreeze/Coolant (blue) or equivalent. Genuine NISSAN Long Life Antifreeze/Coolant (blue) is pre-diluted to provide antifreeze protection to -34° F (-37° C). If additional freeze protection is needed due to weather where you operate your vehicle, add Genuine NISSAN Long Life Antifreeze/Coolant (blue) concentrate following the directions on the container. If an equivalent coolant other than Genuine NISSAN Long Life Antifreeze/Coolant (blue) is used, follow the coolant manufacturer's instructions to maintain minimum antifreeze protection to -34° F (-37° C). The use of other types of coolant solutions other than Genuine NISSAN Long Life Antifreeze/Coolant (blue) or equivalent may damage the engine cooling system.**
- **The life expectancy of the factory-fill coolant is 105,000 miles (168,000 km) or 7 years. Mixing any other type of coolant other than Genuine NISSAN Long Life Antifreeze/Coolant (blue), including Genuine NISSAN Long Life Antifreeze/Coolant (green), or the use of non-distilled water will reduce the life expectancy of the factory-fill coolant. Refer to the Nissan Service and Maintenance Guide for more details.**

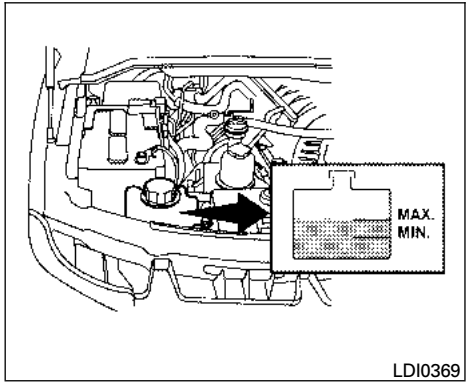


## CHECKING ENGINE COOLANT LEVEL

Check the coolant level **in the reservoir when the engine is cold.** If the coolant level is below the MIN level, add coolant to the MAX level. If the reservoir is empty, check the coolant level in the radiator **when the engine is cold.** If there is insufficient coolant in the radiator, fill the radiator with coolant up to the filler opening and also add it to the reservoir up to the MAX level.

This vehicle contains Genuine NISSAN Long Life Antifreeze/Coolant (blue). The life expectancy of the factory-fill coolant is 105,000 miles (168,000 km) or 7 years. Mixing any other type of coolant or the use of non-distilled water will reduce the life expectancy of the factory-fill coolant. Refer to the NISSAN Service and Maintenance Guide for more details.

**The engine coolant reservoir is a pressurized tank. When installing the cap, tighten.**

**If the cooling system frequently requires coolant, have it checked by a NISSAN dealer.**

## CHANGING ENGINE COOLANT

A NISSAN dealer can change the engine coolant. The service procedure can be found in the NISSAN Service Manual.

**Improper servicing can result in reduced heater performance and engine overheating.**

**⚠ WARNING**

- **To avoid the danger of being scalded, never change the coolant when the engine is hot.**
- **Never remove the radiator or engine coolant reservoir cap when the engine is hot. Serious burns could be caused by high pressure fluid escaping from the radiator.**
- **Avoid direct skin contact with used coolant. If skin contact is made, wash thoroughly with soap or hand cleaner as soon as possible.**
- **Keep coolant out of the reach of children and pets.**

Engine coolant must be disposed of properly. Check your local regulations.

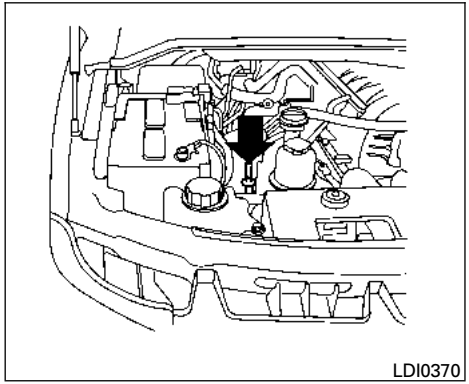
LDI0370

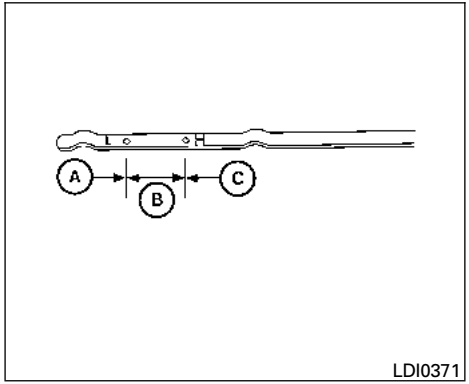

LDI0371

## CHECKING ENGINE OIL LEVEL

1. Park the vehicle on a level surface and apply the parking brake.
2. Start the engine and let it idle until it reaches operating temperature.
3. Turn off the engine. **Wait more than 10 minutes for the oil to drain back into the oil pan.**
4. Remove the dipstick and wipe it clean. Reinsert it all the way.
5. Remove the dipstick again and check the oil level. It should be between the H (High) and L (Low) marks Ⓑ. This is the normal operating oil level range. If the oil level is below the L (Low) mark Ⓐ, remove the oil filler cap and pour recommended oil through the opening. **Do not overfill Ⓒ.**
6. Recheck oil level with the dipstick.

**It is normal to add some oil between oil maintenance intervals or during the break-in period, depending on the severity of operating conditions.**

**⚠ CAUTION**

**Oil level should be checked regularly. Operating the engine with an insufficient amount of oil can damage the engine, and such damage is not covered by warranty.**

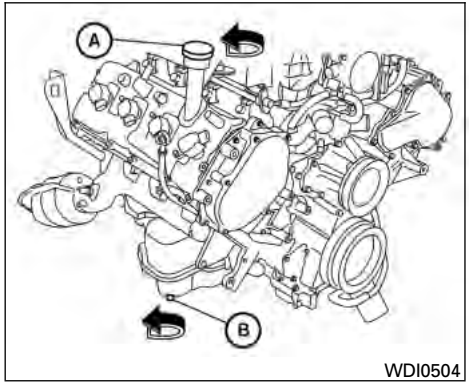


## CHANGING ENGINE OIL

1. Park the vehicle on a level surface and apply the parking brake.
2. Start the engine and let it idle until it reaches operating temperature, then turn it off.
3. Remove the oil filler cap Ⓐ by turning it counterclockwise.
4. Place a large drain pan under the drain plug Ⓑ.
5. Remove the drain plug Ⓑ with a wrench by turning it counterclockwise and completely drain the oil.

   If the oil filter is to be changed, remove and replace it at this time. See “Changing engine oil filter” in this section.

- **Waste oil must be disposed of properly.**
- **Check your local regulations.**

**⚠WARNING**

- **Prolonged and repeated contact with used engine oil may cause skin cancer.**
- **Try to avoid direct skin contact with used oil. If skin contact is made, wash thoroughly with soap or hand cleaner as soon as possible.**
- **Keep used engine oil out of reach of children.**

**⚠CAUTION**

**Be careful not to burn yourself. The engine oil may be hot.**

6. Clean and reinstall the drain plug and a new washer. Securely tighten the drain plug with a wrench. Do not use excessive force.

   **Drain plug tightening torque:**
   **22 - 29 ft-lb (29 - 39 N·m)**

7. Refill engine with recommended oil through the oil filler opening, then install the oil filler cap securely.

   See “Capacities and recommended fuel/lubricants” in the “Technical and consumer information” section of this manual for drain and refill capacity.

   The drain and refill capacity depends on the oil temperature and drain time. Use these specifications for reference only. Always use the dipstick to determine when the proper amount of oil is in the engine.
8. Start the engine. Check for leakage around the drain plug and oil filter. Correct as required.
9. Turn the engine off and wait more than 10 minutes. Check the oil level with the dipstick. Add engine oil if necessary.

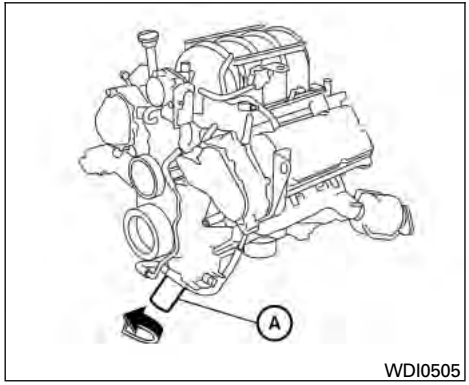

WDI0505

## CHANGING ENGINE OIL FILTER

1. Park the vehicle on a level surface and apply the parking brake.
2. Turn the engine off.
3. Place a large drain pan under the oil filter Ⓐ.
4. Loosen the oil filter Ⓐ with an oil filter wrench by turning it counterclockwise. Then remove the oil filter by turning it by hand.

**⚠CAUTION**

**Be careful not to burn yourself. The engine oil may be hot.**

5. Wipe the engine oil filter sealing surface with a clean rag.

**⚠CAUTION**

**Be sure to remove any old gasket material remaining on the sealing surface of the engine. Failure to do so could lead to an oil leak and engine damage.**

6. Coat the gasket on the new filter with clean engine oil.
7. Screw on the oil filter until a slight resistance is felt, then tighten an additional 2/3 turn.
8. Start the engine and check for leakage around the oil filter. Correct as required.
9. Turn the engine off and wait more than 10 minutes. Check the oil level. Add engine oil if necessary.

## 5-SPEED AUTOMATIC TRANSMISSION FLUID

When checking or replacement is required, we recommend your NISSAN dealer for servicing.

**⚠CAUTION**

- **Use Genuine NISSAN Matic S ATF. If Genuine NISSAN Matic S ATF is not available, Genuine NISSAN Matic J ATF may also be used.**
- **Using automatic transmission fluid other than Genuine NISSAN Matic S ATF or Matic J ATF will cause deterioration in driveability and automatic transmission durability, and may damage the automatic transmission, which is not covered by the NISSAN new vehicle limited warranty.**

The specified automatic transmission fluid is also described on caution labels located in the engine compartment.

## POWER STEERING FLUID

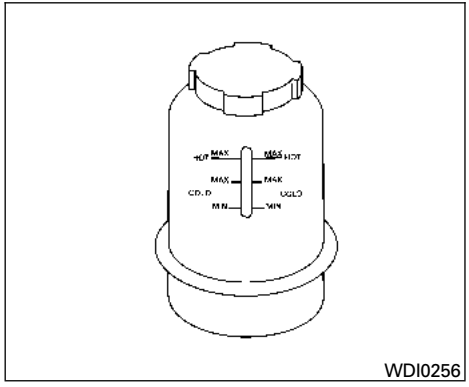

WDI0256

The fluid level should be checked using the HOT MAX range on the power steering fluid reservoir at fluid temperatures of 122° - 176°F (50° - 80°C) or using the COLD MAX range on the power steering fluid reservoir at fluid temperatures of 32° - 86°F (0° - 30°C).

If the fluid is at or below the MIN line, add Genuine NISSAN PSF to HOT MAX or COLD MAX depending on system fluid temperature. Remove the cap and fill through the opening.

**⚠ CAUTION**

- **DO NOT OVERFILL.**
- **Recommended fluid is Genuine NISSAN PSF or equivalent.**

## BRAKE FLUID

For further brake fluid specification information, refer to “Capacities and recommended fuel/lubricants” in the “Technical and consumer information” section of this manual.

**⚠ WARNING**

- **Use only new fluid from a sealed container. Old, inferior or contaminated fluid may damage the brake system. The use of improper fluids can damage the brake system and affect the vehicle’s stopping ability.**
- **Clean the filler cap before removing.**
- **Brake fluid is poisonous and should be stored carefully in marked containers out of reach of children.**

**⚠ CAUTION**

**Do not spill the fluid on any painted surfaces. This will damage the paint. If fluid is spilled, immediately wash the surface with water.**

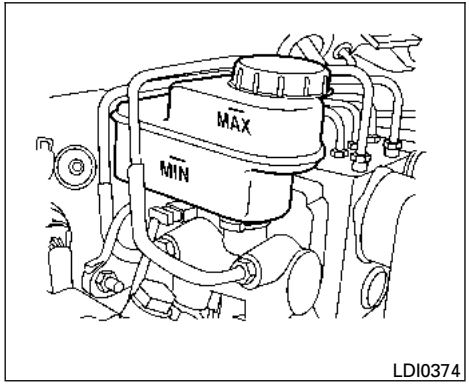

LDI0374

## BRAKE FLUID

Check the brake fluid level in the reservoir. If the fluid level is below the MIN line or the brake warning light comes on, add Genuine NISSAN Super Heavy Duty Brake Fluid or equivalent **DOT 3** fluid up to the MAX line. If fluid must be added frequently, the system should be checked by a NISSAN dealer.

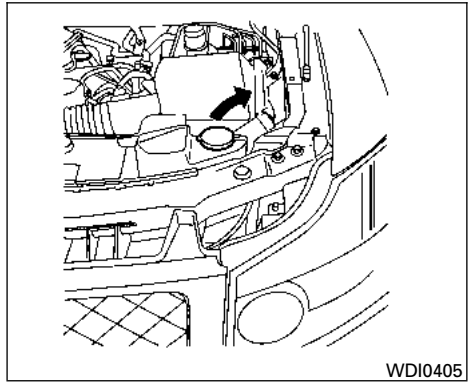
WDI0405

## WINDSHIELD-WASHER FLUID RESERVOIR

Fill the windshield-washer fluid reservoir periodically. Add windshield-washer fluid when the low windshield-washer fluid warning light comes on (if so equipped).

To fill the windshield-washer fluid reservoir, lift the cap off the reservoir and pour the windshield-washer fluid into the reservoir opening.

Add a washer solvent to the washer for better cleaning. In the winter season, add a windshield-washer antifreeze. Follow the manufacturer's instructions for the mixture ratio.

Refill the reservoir more frequently when driving conditions require an increased amount of windshield-washer fluid.

Recommended fluid is Genuine NISSAN Windshield Washer Concentrate Cleaner & Anti-freeze or equivalent.

**⚠ CAUTION**

- **Do not substitute engine anti-freeze coolant for windshield-washer fluid. This may result in damage to the paint.**
- **Do not fill the windshield-washer fluid reservoir with washer fluid concentrates at full strength. Some methyl alcohol based washer fluid concentrates may permanently stain the grille if spilled while filling the windshield-washer fluid reservoir.**
- **Pre-mix washer fluid concentrates with water to the manufacturer's recommended levels before pouring the fluid into the windshield-washer fluid reservoir. Do not use the windshield-washer fluid reservoir to mix the washer fluid concentrate and water.**

- Keep the battery surface clean and dry. Clean the battery with a solution of baking soda and water.
- Make certain the terminal connections are clean and securely tightened.
- If the vehicle is not to be used for 30 days or longer, disconnect the negative (-) battery terminal cable to prevent discharge.

**NOTE:**

**Care should be taken to avoid situations that can lead to potential battery discharge and potential no-start conditions such as: 1. Installation or extended use of electronic accessories that consume battery power when the engine is not running (Phone chargers, GPS, DVD players, etc.) 2. Vehicle is not driven regularly and/or only driven short distances. In these cases, the battery may need to be charged to maintain battery health.**

**⚠WARNING**

- **Do not expose the battery to flames, an electrical spark or a cigarette. Hydrogen gas generated by the battery is explosive. Explosive gases can cause blindness or injury. Do not allow battery fluid to contact your skin, eyes, fabrics or painted surfaces. Sulfuric acid can cause blindness or injury. After touching a battery or battery cap, do not touch or rub your eyes. Thoroughly wash your hands. If the acid contacts your eyes, skin or clothing, immediately flush with water for at least 15 minutes and seek medical attention.**
- **Do not operate the vehicle if the fluid in the battery is low. Low battery fluid can cause a higher load on the battery which can generate heat, reduce battery life, and in some cases lead to an explosion.**
- **When working on or near a battery, always wear suitable eye protection and remove all jewelry.**
- **Battery posts, terminals and related accessories contain lead and lead compounds. Wash hands after handling.**
- **Keep battery out of the reach of children.**
- **Do not tip the battery. Keep the vent caps tight and the battery level.**

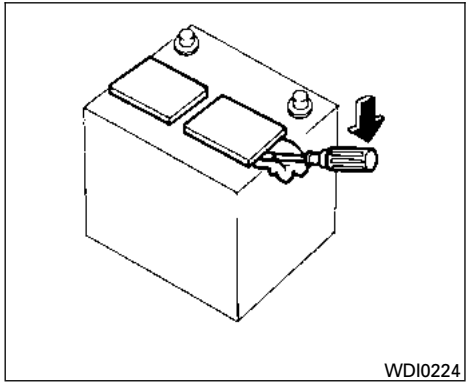


1. Remove the vent caps with a screwdriver as shown. Use a cloth to protect the battery case.

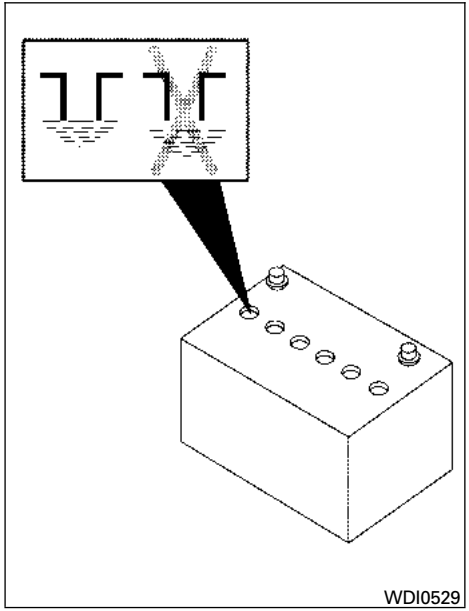


2. Check the fluid level in each cell. If it is necessary to add fluid, add only distilled water to bring the level up to the bottom of the filler opening. **Do not overfill.** Reinstall the vent caps.

Vehicles operated in high temperatures or under severe conditions require frequent checks of the battery fluid level.

## JUMP STARTING

If jump starting is necessary, see “Jump starting” in the “In case of emergency” section of this manual. If the engine does not start by jump starting, the battery may have to be replaced. Contact a NISSAN dealer.

## VARIABLE VOLTAGE CONTROL SYSTEM

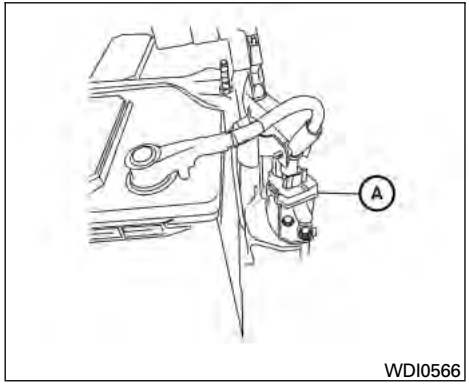


WDI0566

**⚠ CAUTION**

- **Do not ground accessories directly to the battery terminal. Doing so will bypass the variable voltage control system and the vehicle battery may not charge completely.**
- **Use electrical accessories with the engine running to avoid discharging the vehicle battery.**

Your vehicle is equipped with a variable voltage control system. This system measures the amount of electrical discharge from the battery and controls voltage generated by the generator.

The current sensor Ⓐ is located near the battery along the negative battery cable. If you add electrical accessories to your vehicle, be sure to ground them to a suitable body ground such as the frame or engine block area.

## DRIVE BELT

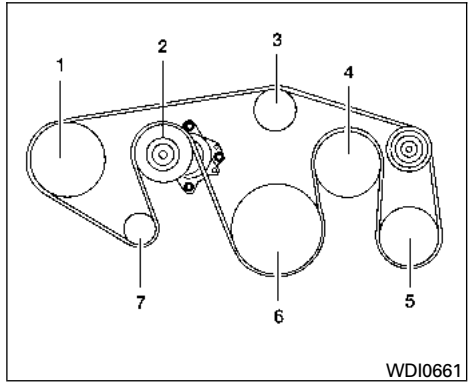


WDI0661

1. Power steering fluid pump
2. Automatic belt tensioner
3. Water pump
4. Cooling fan
5. Air conditioner compressor
6. Crankshaft pulley
7. Generator

**⚠ WARNING**

**Be sure the ignition switch is in the OFF or LOCK position before servicing drive belt. The engine could rotate unexpectedly.**

1. Visually inspect the belt for signs of unusual wear, cuts, fraying or looseness. If the belt is in poor condition or is loose, have it replaced or adjusted by a NISSAN dealer.
2. Have the belt checked regularly for condition and tension in accordance with the maintenance schedule found in the “NISSAN Service and Maintenance Guide”.

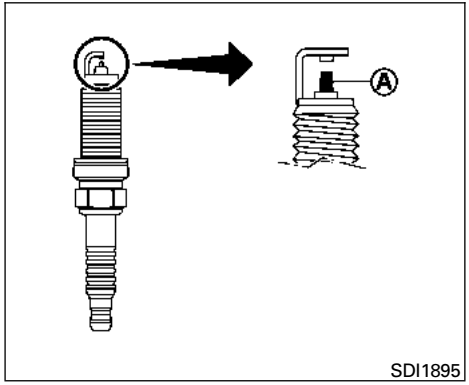


## REPLACING SPARK PLUGS

### Platinum-tipped spark plugs

It is not necessary to replace platinum-tipped Ⓐ spark plugs as frequently as conventional type spark plugs because they last much longer. Follow the maintenance log shown in the “NISSAN Service and Maintenance Guide”. Do not service platinum-tipped spark plugs by cleaning or regapping.

- **Always replace spark plugs with recommended or equivalent ones.**

**⚠ WARNING**

**Be sure the engine and ignition switch are off and that the parking brake is engaged securely.**

**⚠ CAUTION**

**Be sure to use the correct socket to remove the spark plugs. An incorrect socket can damage the spark plugs.**

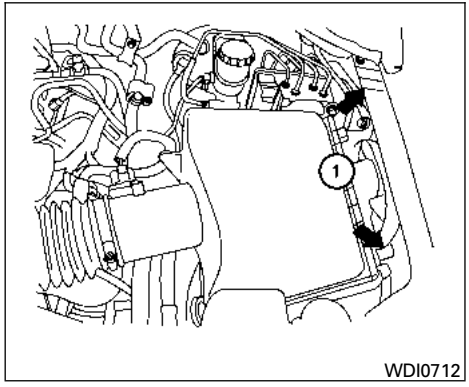


The air cleaner filter should not be cleaned and reused. Replace it according to the maintenance log shown in the “NISSAN Service and Maintenance Guide.”

To remove the air cleaner filter:

1. Unlatch the clips and move the air cleaner cover upward.
2. Remove the air cleaner filter.
3. Wipe the inside of the air cleaner filter housing and the cover with a damp cloth.

**NOTE:**

**After installing a new air cleaner, make sure the air cleaner cover is seated in the housing and latch the clips.**

**WARNING**

- **Operating the engine with the air cleaner removed can cause you or others to be burned. The air cleaner not only cleans the air, it stops the flame if the engine backfires. If it isn’t there, and the engine backfires, you could be burned. Do not drive with the air cleaner removed, and be careful when working on the engine with the air cleaner removed.**
- **Never pour fuel into the throttle body or attempt to start the engine with the air cleaner removed. Doing so could result in serious injury.**

## IN-CABIN MICROFILTER (if so equipped)

The in-cabin microfilter restricts the entry of airborne dust and pollen particles and reduces some objectionable outside odors. The filter is located behind the glove box. Refer to the “NISSAN Service and Maintenance Guide” for change intervals.

To replace the filter, perform the following procedure:

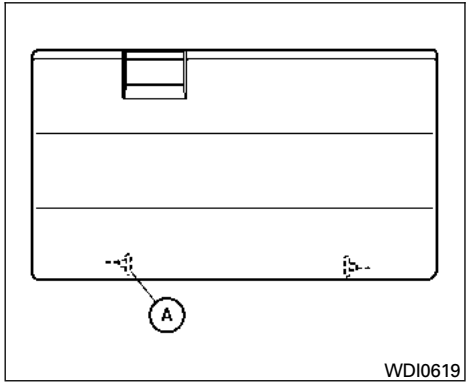


1. Remove the 2 lower glove box hinge pins Ⓐ. Remove the glove box from the opening and let it hang by the cord.

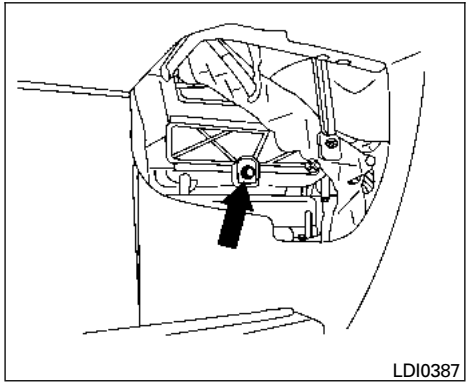


2. Remove the filter cover bolt and remove the filter cover.
3. Remove the old in-cabin microfilters.

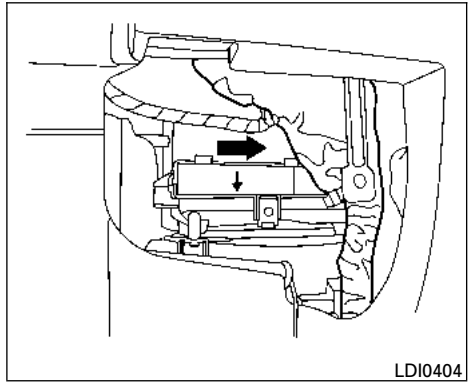


**NOTE:**

**The filters are marked with air flow arrows. The end of the filter with the arrow should face the rear of the vehicle. The arrows should face downward.**

4. Insert the first filter into the housing and slide it over to the right. Insert the second filter into the housing.
5. Install the filter cover.
6. Install the glove box door.
7. Fill out the date information on the small replacement label and attach it to the glove box lid.

## CLEANING

If your windshield is not clear after using the windshield washer or if a wiper blade chatters when running, wax or other material may be on the blade or windshield.

Clean the outside of the windshield with a washer solution or a mild detergent. Your windshield is clean if beads do not form when rinsing with clear water.

Clean each blade by wiping it with a cloth soaked in a washer solution or a mild detergent. Then rinse the blades with clear water. If your windshield is still not clear after cleaning the blades and using the wiper, replace the blades.

**⚠ CAUTION**

**Worn windshield wiper blades can damage the windshield and impair driver vision.**

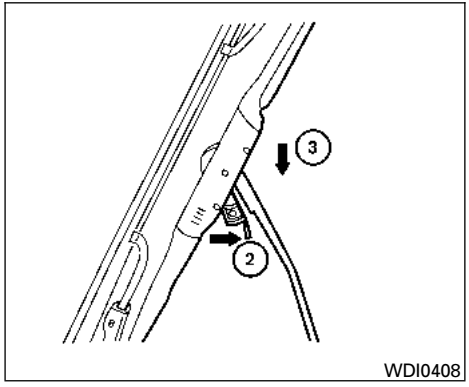


## REPLACING

Replace the wiper blades if they are worn.

1. Lift the wiper arm away from the windshield.

② Push the release tab, then move the wiper blade down the wiper arm to remove.

③ Remove the wiper blade.

4. Insert the new wiper blade onto the wiper arm until it clicks into place.
5. Rotate the wiper blade so the dimple is in the groove.
6. Return the wiper to its original position and release it until it has made contact with the windshield.

**⚠ CAUTION**

- **After wiper blade replacement, return the wiper arm to its original position; otherwise it may be damaged when the hood is opened.**
- **Make sure the wiper blades contact the glass; otherwise the arms may be damaged from wind pressure.**

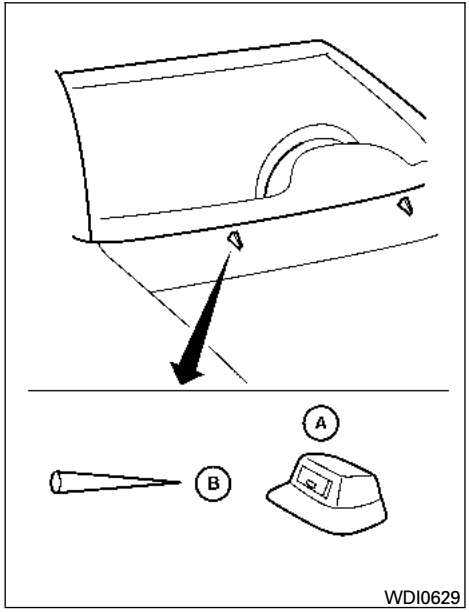


If you wax the surface of the hood, be careful not to let wax get into the windshield washer nozzle Ⓐ. This may cause clogging or improper windshield washer operation. If wax gets into the nozzle, remove it with a needle or small pin Ⓑ.

If the brakes do not operate properly, have the brakes checked by a NISSAN dealer.

## Self-adjusting brakes

Your vehicle is equipped with self-adjusting brakes.

The front and rear disc-type brakes self-adjust every time the brake pedal is applied.

**⚠WARNING**

**See a NISSAN dealer for a brake system check if the brake pedal height does not return to normal.**

## Brake pad wear indicators

The disc brake pads on your vehicle have audible wear indicators. When a brake pad requires replacement, a high pitched scraping or screeching sound will be heard when the vehicle is in motion. The noise will be heard whether or not the brake pedal is depressed. Have the brakes checked as soon as possible if the wear indicator sound is heard.

Under some driving or climate conditions, occasional brake squeak, squeal or other noise may be heard. Occasional brake noise during light to moderate stops is normal and does not affect the function or performance of the brake system.

**Proper brake inspection intervals should be followed.** For more information regarding brake inspections, see the appropriate maintenance schedule information in the “NISSAN Service and Maintenance Guide”.

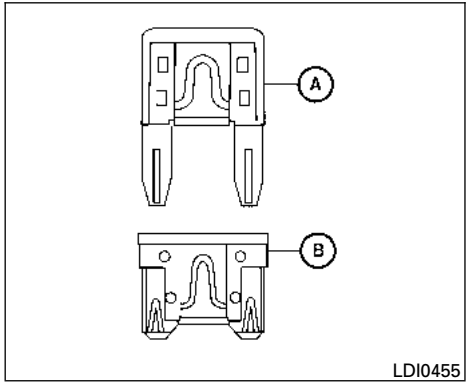


Two types of fuses are used. Type Ⓐ is used in the fuse boxes in the engine compartment. Type Ⓑ is used in the passenger compartment fuse box.

Type A fuses are provided as spare fuses. They are stored in the passenger compartment fuse box.

Type A fuses can be installed in the engine compartment and passenger compartment fuse boxes.

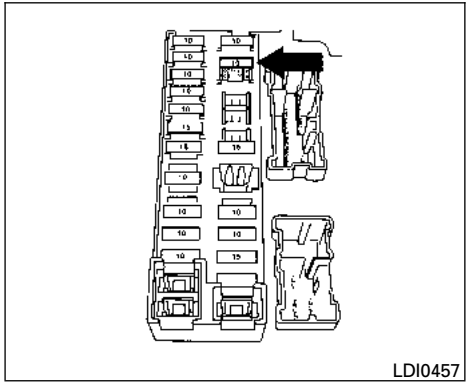


If a type A fuse is used to replace a type B fuse, the type A fuse will not be level with the fuse pocket as shown in the illustration. This will not affect the performance of the fuse. Make sure the fuse is installed in the fuse box securely.

Type B fuses cannot be installed in the underhood fuse boxes. Only use type A fuses in the underhood fuse boxes.

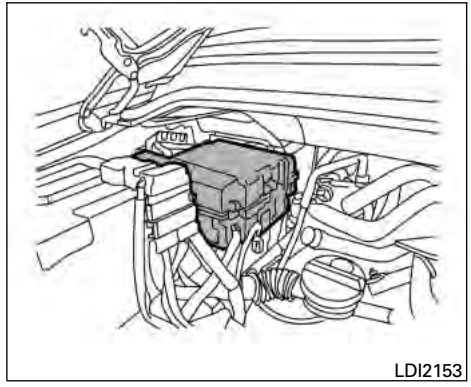


## ENGINE COMPARTMENT

**⚠CAUTION**

**Never use a fuse of a higher or lower amperage rating than specified on the fuse box cover. This could damage the electrical system or cause a fire.**

If any electrical equipment does not come on, check for an open fuse.

1. Be sure the ignition switch and the headlight switch are OFF.
2. Open the engine hood.

3. Remove the fuse box cover by pushing the tab and lifting the cover up.
4. Remove the fuse with the fuse puller. The fuse puller is located in the center of the fuse block in the passenger compartment.

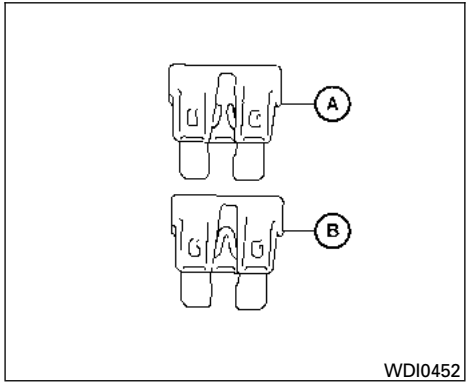

WDI0452

5. If the fuse is open Ⓐ, replace it with a new fuse Ⓑ.
6. If a new fuse also opens, have the electrical system checked and repaired by a NISSAN dealer.

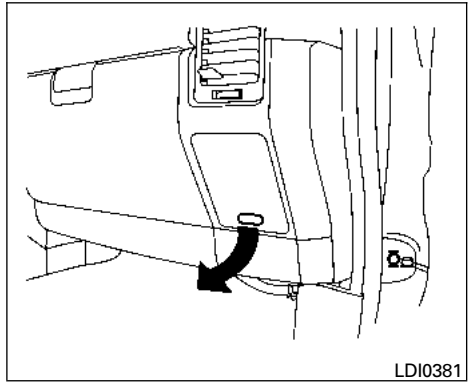
LDI0381

## Fusible links

If the electrical equipment does not operate and fuses are in good condition, check the fusible links. If any of these fusible links are melted, replace with only Genuine NISSAN parts.

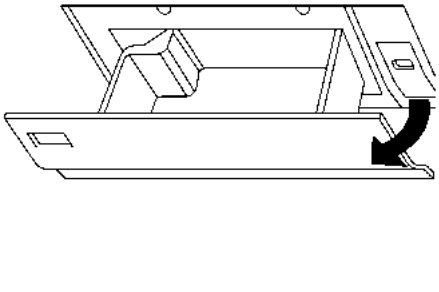

LDI0618

## PASSENGER COMPARTMENT

**⚠ CAUTION**

**Never use a fuse of a higher or lower amperage rating than specified on the fuse box cover. This could damage the electrical system or cause a fire.**

If any electrical equipment does not operate, check for an open fuse.

1. Be sure the ignition switch and the headlight switch are OFF.
2. Open the glove box to access the fuse box cover.
3. Pull the fuse box cover to remove.
4. Remove the fuse with the fuse puller.

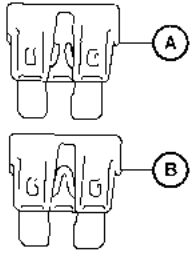


WDI0452

**Type A**

5. If the fuse is open Ⓐ, replace it with an equivalent good fuse Ⓑ.
6. Push the fuse box cover to install.
7. If a new fuse also opens, have the electrical system checked and repaired by a NISSAN dealer.

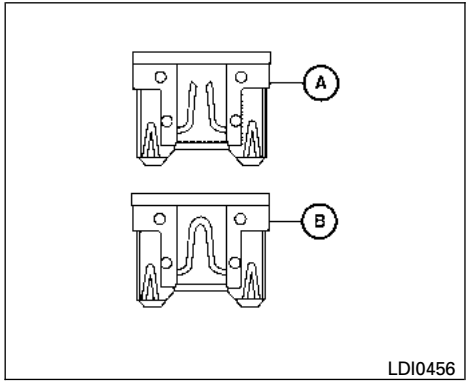


**Type B**

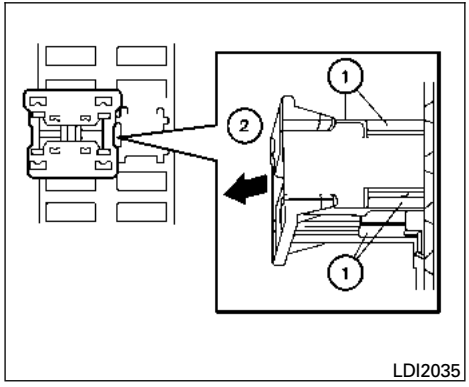


## Extended storage switch

If any electrical equipment does not operate, remove the extended storage switch and check for an open fuse.

**NOTE:**

**The extended storage switch is used for long term vehicle storage. Even if the extended storage switch is broken it is not necessary to replace it. Replace only the open fuse in the switch with a new fuse.**

How to replace the extended storage switch:

1. To remove the extended storage switch, be sure the ignition switch is in the OFF or LOCK position.
2. Be sure the headlight switch is in the OFF position.
3. Remove the fuse box cover.
4. Pinch the locking tabs ① found on each side of the storage switch.
5. Pull the storage switch straight out from the fuse box ②.

**⚠ CAUTION**

**Be careful not to allow children to swallow the battery or removed parts.**

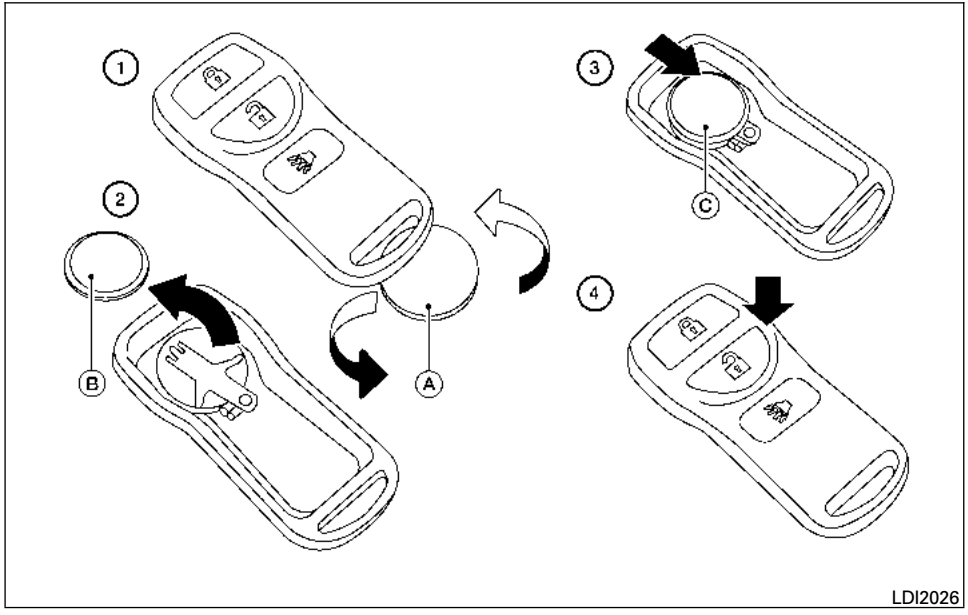


## KEYFOB (if so equipped)

Replace the battery in the keyfob as follows:

① Open the lid using a coin Ⓐ.

② Remove the battery Ⓑ.

③ Install a new battery Ⓒ with the "+" facing down.

- Hold the battery by the edges. Holding the battery across the contact points will seriously deplete the storage capacity.

- Do not touch the internal circuit and electric terminals as it could cause a malfunction.
- When changing the battery, do not let dust or oil get on the keyfob.
- There is danger of explosion if a lithium battery is incorrectly replaced. Replace only with the same or equivalent type.

Recommended battery: CR2025 or equivalent.

④ Close the lid securely.

5. Press the button, then the button two or three times to check the keyfob operation.

**If the battery is removed for any reason other than replacement, perform step 5.**

- **An improperly disposed battery can hurt the environment. Always confirm local regulations for battery disposal.**
- **The keyfob is water-resistant; however, if it does get wet, immediately wipe completely dry.**
- **The operational range of the keyfob extends to approximately 33 ft (10 m) from the vehicle. This range may vary with conditions.**

**FCC Notice:**

**For USA:**
**This device complies with Part 15 of the FCC Rules. Operation is subject to the following two conditions: (1) This device may not cause harmful interference, and (2) this device must accept any interference received, including interference that may cause undesired operation. Note: Changes or modifications not expressly approved by the party responsible for compliance could void the user's authority to operate the equipment.**

**For Canada:**
**This device complies with RSS-210 of Industry Canada. Operation is subject to the following two conditions: (1) this device may not cause interference, and (2) this device must accept any interference, including interference that may cause undesired operation of the device.**

## HEADLIGHTS

### Replacing the halogen headlight bulb

The headlight is a semi-sealed beam type which uses a replaceable headlight (halogen) bulb. Because the headlight assembly must be removed from the vehicle for bulb replacement, see your NISSAN dealer.

**⚠ CAUTION**

- **High pressure halogen gas is sealed inside the halogen bulb. The bulb may break if the glass envelope is scratched or the bulb is dropped.**
- **When handling the bulb, do not touch the glass envelope.**
- **DO NOT TOUCH THE BULB WITH BARE HANDS.**
- **Do not leave the bulb out of the headlight reflector for a long period of time as dust, moisture and smoke may enter the headlight body and affect the performance of the headlight.**
- **Aiming is not necessary after replacing the bulb. When aiming adjustment is necessary, contact a NISSAN dealer.**

**NOTE:**

**Use the same number and wattage as shown in the chart.**

Fog may temporarily form inside the lens of the exterior lights in the rain or in a car wash. A temperature difference between the inside and the outside of the lens causes the fog. This is not a malfunction. If large drops of water collect inside the lens, contact a NISSAN dealer.

## FOG LIGHTS (if so equipped)

### Replacing the fog light bulb

**⚠ CAUTION**

- **High pressure halogen gas is sealed inside the halogen bulb. The bulb may break if the glass envelope is scratched or the bulb is dropped.**
- **When handling the bulb, do not touch the glass envelope.**
- **Use the same number and wattage as originally installed as shown in the chart.**
- **Do not leave the bulb out of the fog light for a long period of time as dust, moisture and smoke may enter the fog light body and affect the performance of the fog light.**

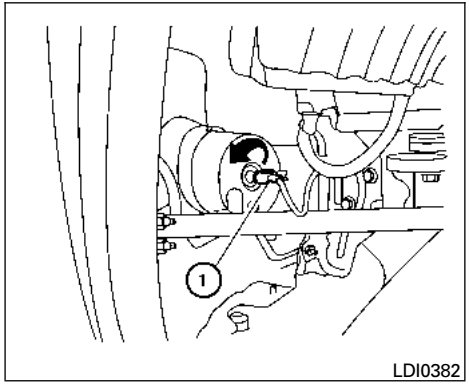


1. Disconnect the negative (-) battery cable.
2. The fog light is accessible in front of the front tire and behind the bumper.
3. Disconnect the bulb connector ①.
4. Rotate the bulb counterclockwise and remove.
5. Remove by pulling it straight out of the fog light assembly. Do not shake or rotate the bulb when removing it. Do not touch the glass envelope.
6. Install in the reverse order of removal.

**NOTE:**

**To adjust the fog light vertical aim: Access the aiming screw from underneath the front bumper. The aiming screw is located on the bottom of the fog light housing. Turn the screw clockwise to raise the pattern. Turn the screw counterclockwise to lower the pattern.**

## EXTERIOR AND INTERIOR LIGHTS

| Item | Wattage (W) | Bulb No. |
|---|---|---|
| Headlight assembly | | |
| High | 65 | 9005 (HB3) |
| Low | 55 | 9006 (HB4) |
| Park/Turn | 28/8 | 3457K |
| Sidemarker | 3.8 | 194 |
| Side turn signal light* (if so equipped) | — | LED |
| Front fog light (if so equipped) | 27.5 | 880 |
| Puddle light (if so equipped) | 9 | 906LF |
| Room/map lights (front) | 6 | – |
| Personal lights | 8 | AL67 |
| Vanity mirror light (if so equipped) | 1.8 | – |
| Step light (if so equipped) | 3.8 | 194 |
| High-mounted stop light/cargo lights* | 12.8 | 912LF |
| Rear combination light | | |
| Tail/Stop | 27/8 | 3157K |
| Backup (reversing) | 18 | 921LF |
| Turn | 27 | 3156K |
| Tailgate light (if so equipped) | 18 | 921 |
| License plate light | 5 | W5W |

* See a NISSAN dealer for replacement.

Always check with the Parts Department at a NISSAN dealer for the latest parts information.

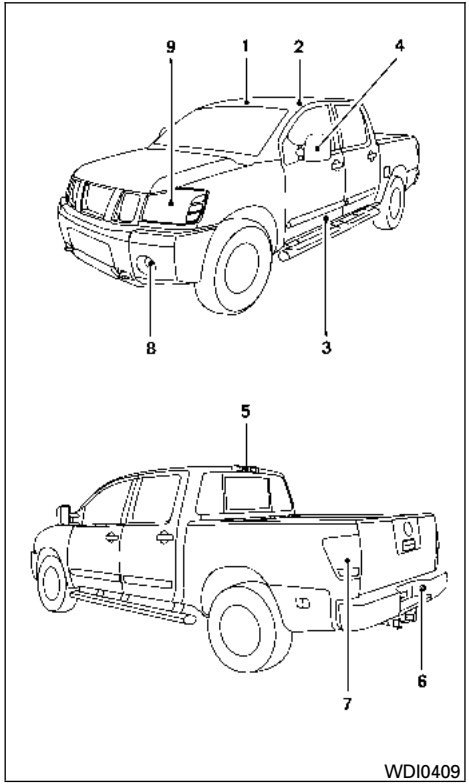


1. Room/map light (if so equipped)
2. Personal lights (if so equipped)
3. Step light (if so equipped)
4. Puddle light/Side turn signal light (if so equipped)
5. High-mount stoplight/cargo lights
6. License plate light
7. Rear combination/tailgate light (if so equipped) assembly
8. Fog light (if so equipped)
9. Headlight assembly

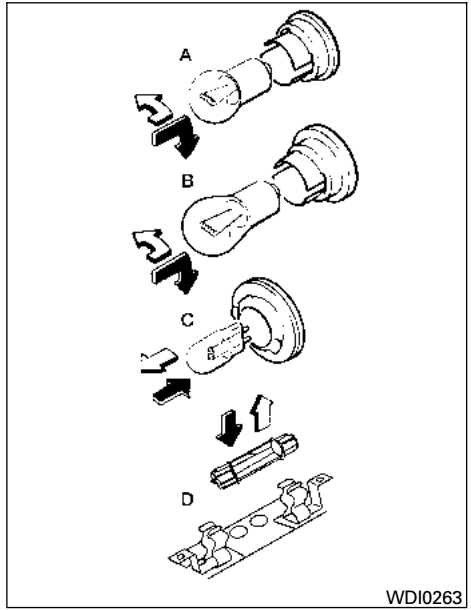


## Replacement procedures

All other lights are either type A, B, C or D. When replacing a bulb, first remove the lens, lamp and/or cover.

⇧ Indicates bulb removal

⬆ Indicates bulb installation

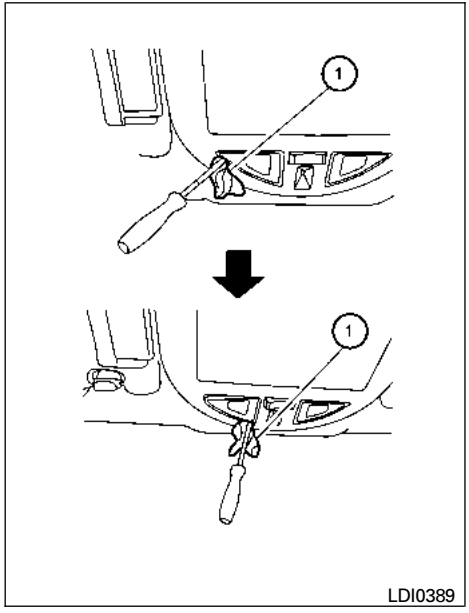


**Interior/map lights**

Use a cloth ① to protect the housing.

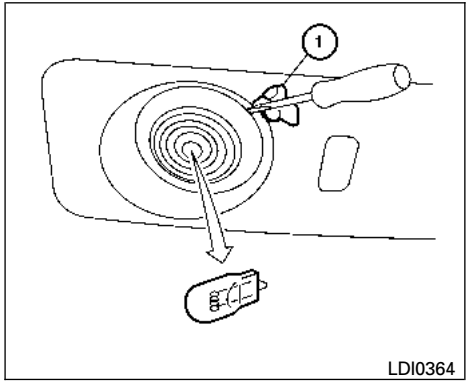


**Personal lights (If so equipped)**

Use a cloth ① to protect the housing.

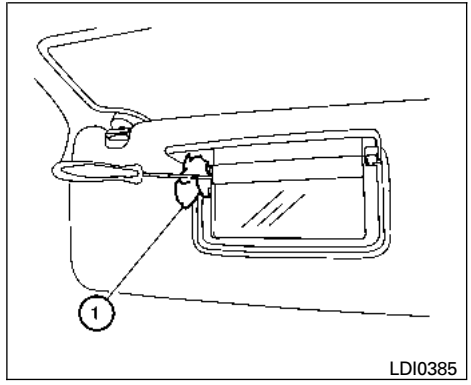


**Vanity mirror (If so equipped)**

Use a cloth ① to protect the housing.

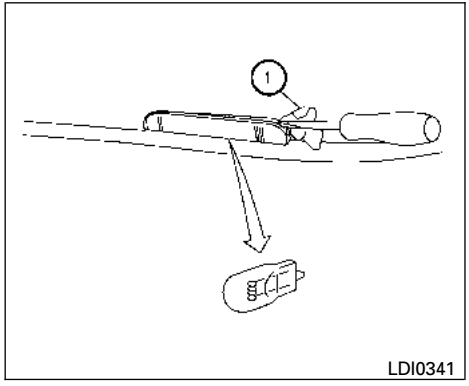


**Step light (If so equipped)**

Use a cloth ① to protect the housing.

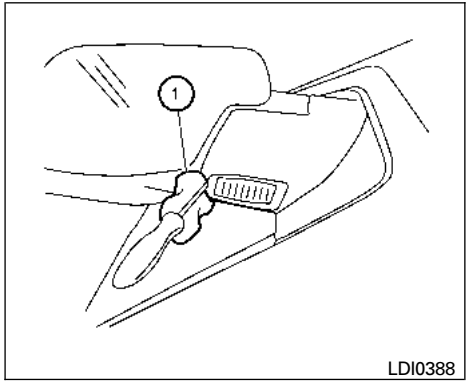


**Puddle light (If so equipped)**

Use a cloth ① to protect the housing.

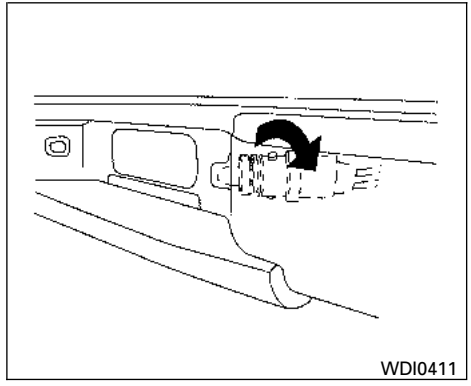


**License plate light**

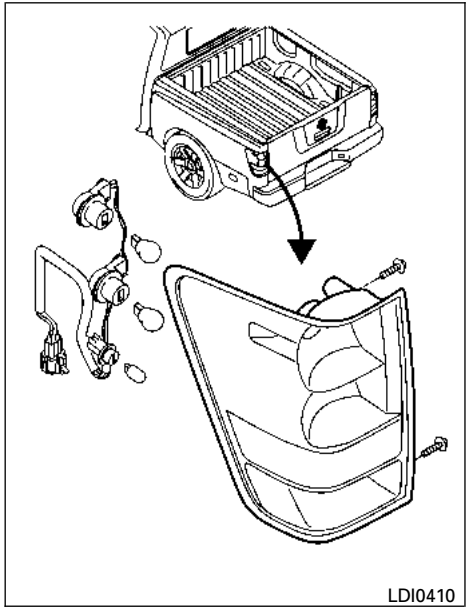


**Rear combination light**

**If you have a flat tire, see "Flat tire" in the "In case of emergency" section of this manual.**

## TIRE PRESSURE

### Tire Pressure Monitoring System (TPMS)

This vehicle is equipped with the Tire Pressure Monitoring System (TPMS). It monitors tire pressure of all 4 tires except the spare. When the low tire pressure warning light is lit and the CHECK TIRE PRESSURE warning appears in the vehicle information display, one or more of your tires is significantly under-inflated. If equipped, the system also displays pressure of all tires (except the spare tire) on the display screen by sending a signal from a sensor that is installed in each wheel.

The TPMS will activate only when the vehicle is driven at speeds above 16 MPH (25 km/h). Also, this system may not detect a sudden drop in tire pressure (for example a flat tire while driving).

For more details, refer to "Warning/Indicator Lights and Audible Reminders" in the "Instruments and controls" section, "Tire pressure information" in the "Display screen, heater, air conditioner, audio and phone systems" section, "Tire Pressure Monitoring System (TPMS)" in the "Starting and driving" section, and "Flat tire" in the "In case of emergency" section.

### Tire inflation pressure

Check the tire pressures (including the spare) often and always prior to long distance trips. The recommended tire pressure specifications are shown on the F.M.V.S.S./C.M.V.S.S. certification label or the Tire and Loading Information label under the "Cold Tire Pressure" heading. The Tire and Loading Information label is affixed to the driver side center pillar. Tire pressures should be checked regularly because:

- Most tires naturally lose air over time.
- Tires can lose air suddenly when driven over potholes or other objects or if the vehicle strikes a curb while parking.

The tire pressures should be checked when the tires are cold. The tires are considered COLD after the vehicle has been parked for 3 or more hours, or driven less than 1 mile (1.6 km) at moderate speeds.

**Incorrect tire pressure, including under inflation, may adversely affect tire life and vehicle handling.**

**⚠WARNING**

- **Improperly inflated tires can fail suddenly and cause an accident.**
- **The Gross Vehicle Weight Rating (GVWR) is located on the F.M.V.S.S./C.M.V.S.S. certification label. The vehicle weight capacity is indicated on the Tire and Loading Information label. Do not load your vehicle beyond this capacity. Overloading your vehicle may result in reduced tire life, unsafe operating conditions due to premature tire failure, or unfavorable handling characteristics and could also lead to a serious accident. Loading beyond the specified capacity may also result in failure of other vehicle components.**
- **Before taking a long trip, or whenever you heavily load your vehicle, use a tire pressure gauge to ensure that the tire pressures are at the specified level.**
- **For additional information regarding tires, refer to "Important Tire Safety Information" (US) or "Tire Safety Information" (Canada) in the Warranty Information Booklet.**

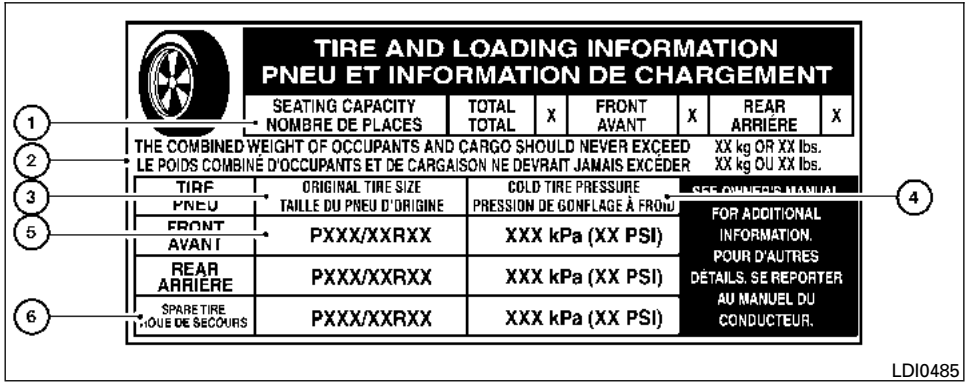


Tire and loading information label

① Seating capacity: The maximum number of occupants that can be seated in the vehicle.

② Vehicle load limit: See loading information in the “Technical and consumer information” section.

③ Original tire size: The size of the tires originally installed on the vehicle at the factory.

④ Cold tire pressure: Inflate the tires to this pressure when the tires are cold. Tires are considered COLD after the vehicle has been parked for 3 or more hours, or driven less than 1 mile (1.6 km) at moderate speeds. The recommended cold tire inflation is set by the manufacturer to provide the best balance of tire wear, vehicle handling, driveability, tire noise, etc., up to the vehicle’s GVWR.

⑤ Tire size - refer to “Tire labeling” later in this section.

⑥ Spare tire size.

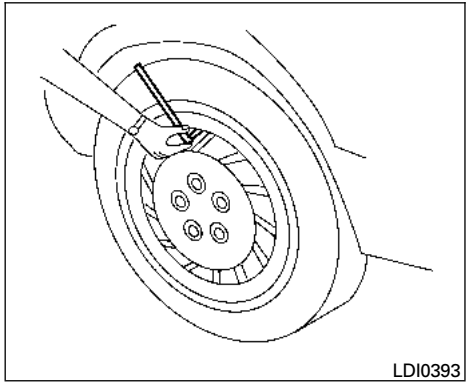


Checking tire pressure

1. Remove the valve stem cap from the tire.
2. Press the pressure gauge squarely onto the valve stem. Do not press too hard or force the valve stem sideways, or air will escape. If the hissing sound of air escaping from the tire is heard while checking the pressure, reposition the gauge to eliminate this leakage.
3. Remove the gauge.
4. Read the tire pressure on the gauge stem and compare to the specification shown on the Tire and Loading Information label.
5. Add air to the tire as needed. If too much air is added, press the core of the valve stem briefly with the tip of the gauge stem to release pressure. Recheck the pressure and add or release air as needed.
6. Install the valve stem cap.
7. Check the pressure of all other tires, including the spare.

| Size | Cold Tire Inflation Pressure |
|---|---|
| Front Original Tire:<br>P265/70R18<br>P275/70R18<br>P275/60R20 | 250 kPa, 36 PSI |
| Rear Original Tire:<br>P265/70R18<br>P275/70R18<br>P275/60R20 | 250 kPa, 36 PSI |
| Spare Tire:<br>P265/70R18<br>P275/70R18<br>P275/60R20 | 250 kPa, 36 PSI |

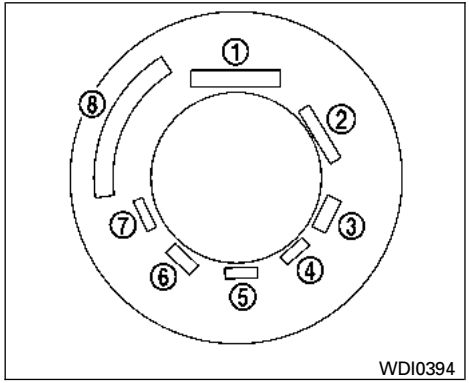


**Example**

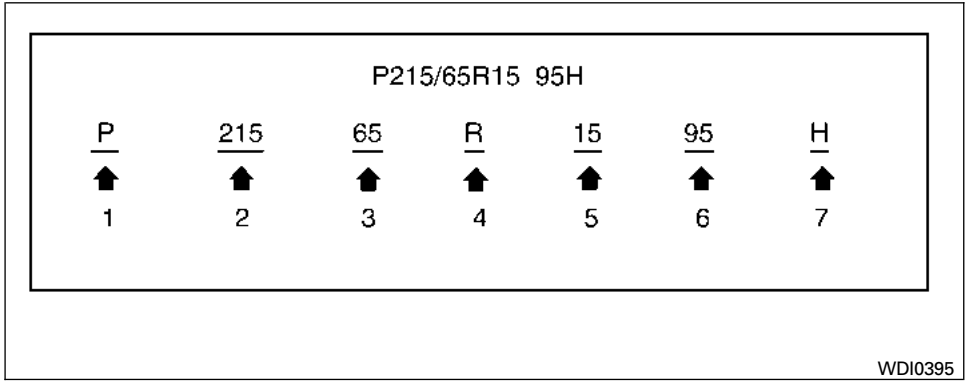


**Example**

## TIRE LABELING

Federal law requires tire manufacturers to place standardized information on the sidewall of all tires. This information identifies and describes the fundamental characteristics of the tire and also provides the tire identification number (TIN) for safety standard certification. The TIN can be used to identify the tire in case of a recall.

① Tire size (example: P215/65R15 95H)

1. P: The “P” indicates the tire is designed for passenger vehicles (not all tires have this information).
2. Three-digit number (215): This number gives the width in millimeters of the tire from sidewall edge to sidewall edge.
3. Two-digit number (65): This number, known as the aspect ratio, gives the tire’s ratio of height to width.
4. R: The “R” stands for radial.
5. Two-digit number (15): This number is the wheel or rim diameter in inches.
6. Two- or three-digit number (95): This number is the tire’s load index. It is a measurement of how much weight each tire can support. You may not find this information on all tires because it is not required by law.
7. H: Tire speed rating. You should not drive the vehicle faster than the tire speed rating.

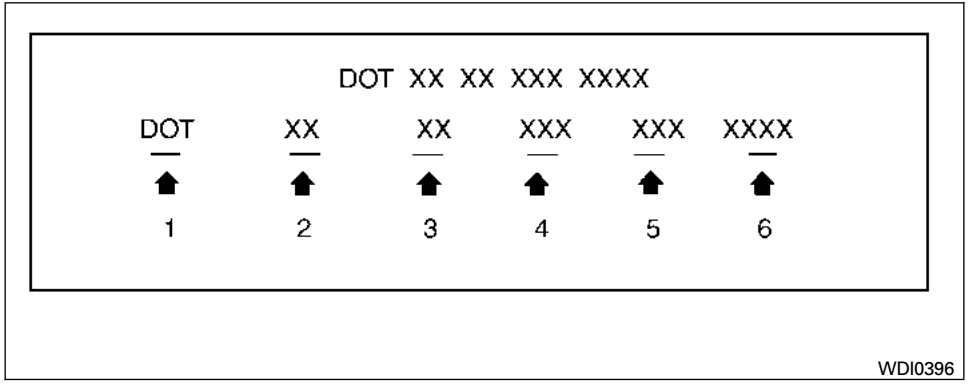


**Example**

② TIN (Tire Identification Number) for a new tire (example: DOT XX XX XXX XXXX)

1. DOT: Abbreviation for the “Department Of Transportation”. The symbol can be placed above, below or to the left or right of the Tire Identification Number.
2. Two-digit code: Manufacturer’s identification mark.
3. Two-digit code: Tire size.
4. Three-digit code: Tire type code (Optional).
5. Three-digit code: Date of Manufacture.
6. Four numbers represent the week and year the tire was built. For example, the numbers 3103 means the 31st week of 2003. If these numbers are missing, then look on the other sidewall of the tire.

③ Tire ply composition and material

The number of layers or plies of rubber-coated fabric in the tire. Tire manufacturers also must indicate the materials in the tire, which include steel, nylon, polyester, and others.

④ Maximum permissible inflation pressure

This number is the greatest amount of air pressure that should be put in the tire. Do not exceed the maximum permissible inflation pressure.

⑤ Maximum load rating

This number indicates the maximum load in kilograms and pounds that can be carried by the tire. When replacing the tires on the vehicle, always use a tire that has the same load rating as the factory installed tire.

⑥ Term of “tubeless” or “tube type”

Indicates whether the tire requires an inner tube (“tube type”) or not (“tubeless”).

⑦ The word “radial”

The word “radial” is shown if the tire has radial structure.

⑧ Manufacturer or brand name

Manufacturer or brand name is shown.

**Other Tire-related Terminology**

In addition to the many terms that are defined throughout this section, Intended Outboard Sidewall is (1) the sidewall that contains a whitewall, bears white lettering or bears manufacturer, brand, and/or model name molding that is higher or deeper than the same molding on the other sidewall of the tire, or (2) the outward facing sidewall of an asymmetrical tire that has a particular side that must always face outward when mounted on a vehicle.

## TYPES OF TIRES

**⚠WARNING**

- **When changing or replacing tires, be sure all four tires are of the same type (i.e., Summer, All Season or Snow) and construction. A NISSAN dealer may be able to help you with information about tire type, size, speed rating and availability.**
- **Replacement tires may have a lower speed rating than the factory equipped tires, and may not match the potential maximum vehicle speed. Never exceed the maximum speed rating of the tire.**
- **Replacing tires with those not originally specified by NISSAN could affect the proper operation of the low tire pressure warning system.**
- **For additional information regarding tires, refer to “Important Tire Safety Information” (US) or “Tire Safety Information” (Canada) in the Warranty Information Booklet.**

### All season tires

NISSAN specifies All Season tires on some models to provide good performance all year, including snowy and icy road conditions. All Season tires are identified by ALL SEASON and/or M&S on the tire sidewall. Snow tires have better snow traction than All Season tires and may be more appropriate in some areas.

### Summer tires

NISSAN specifies summer tires on some models to provide superior performance on dry roads. Summer tire performance is substantially reduced in snow and ice. Summer tires do not have the tire traction rating “M&S” on the tire sidewall.

If you plan to operate your vehicle in snowy or icy conditions, NISSAN recommends the use of SNOW tires or ALL SEASON tires on all four wheels.

### Snow tires

If snow tires are needed, it is necessary to select tires equivalent in size and load rating to the original equipment tires. If you do not, it can adversely affect the safety and handling of your vehicle.

Generally, snow tires have lower speed ratings than factory equipped tires and may not match the potential maximum vehicle speed. Never exceed the maximum speed rating of the tire.

If you install snow tires, they must be the same size, brand, construction and tread pattern on all four wheels.

For additional traction on icy roads, studded tires may be used. However, some U.S. states and Canadian provinces prohibit their use. Check local, state and provincial laws before installing studded tires. Skid and traction capabilities of studded snow tires on wet or dry surfaces may be poorer than that of non-studded snow tires.

## TIRE CHAINS

**⚠ CAUTION**

**Tire chains/cables should not be installed on P275/60R20 size tires. Installation of the tire chains/cables on P275/60R20 size tires will cause damage to the vehicle. If you plan to use tire chains/cables, you should install P265/70R18 size tires on your vehicle.**

Use of tire chains may be prohibited according to location. Check the local laws before installing tire chains. When installing tire chains, make sure they are the proper size for the tires on your vehicle and are installed according to the chain manufacturer's suggestions. **Use only SAE class "S" chains.** Class "S" chains are used on vehicles with restricted tire to vehicle clearance. Vehicles that can use Class "S" chains are designed to meet the minimum clearances between the tire and the closest vehicle suspension or body component required to accommodate the use of a winter traction device (tire chains or cables). The minimum clearances are determined using the factory equipped tire size. Other types may damage your vehicle. Use chain tensioners when recommended by the tire chain manufacturer to ensure a tight fit. Loose end links of the tire chain must be secured or removed to prevent the possibility of whipping action damage to the fenders or underbody. If possible, avoid fully loading your vehicle when using tire chains. In addition, drive at a reduced speed. Otherwise, your vehicle may be damaged and/or vehicle handling and performance may be adversely affected.

**Tire chains must be installed only on the rear wheels and not on the front wheels.**

Do not use tire chains on dry roads. Driving with chains in such conditions can cause damage to the various mechanisms of the vehicle due to some overstress.

Use only the 2WD range when driving on clear paved roads.

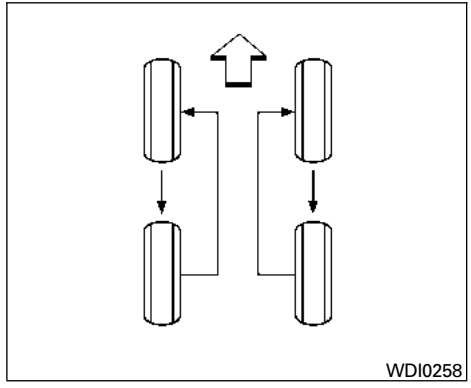


## CHANGING WHEELS AND TIRES

### Tire rotation

NISSAN recommends rotating the tires every 7,500 miles (12,000 km).

See "Flat tire" in the "In case of emergency" section in this manual for tire replacing procedures.

**As soon as possible, tighten the wheel nuts to the specified torque with a torque wrench.**

**Wheel nut tightening torque:**

**98 ft-lb (133 N·m)**

**The wheel nuts must be kept tightened to specifications at all times. It is recommended that wheel nuts be tightened to specification at each tire rotation interval.**

**⚠WARNING**

- **After rotating the tires, check and adjust the tire pressure.**
- **Retighten the wheel nuts when the vehicle has been driven for 600 miles (1,000 km) (also in cases of a flat tire, etc.).**
- **Do not include the spare tire in the tire rotation.**
- **For additional information regarding tires, refer to "Important Tire Safety Information" (US) or "Tire Safety Information" (Canada) in the Warranty Information Booklet.**

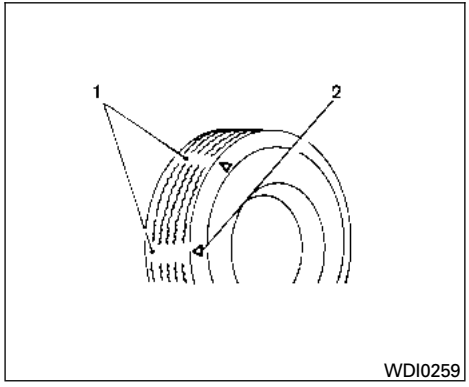


1. Wear indicator
2. Location mark

Tire wear and damage

**⚠WARNING**

- **Tires should be periodically inspected for wear, cracking, bulging or objects caught in the tread. If excessive wear, cracks, bulging or deep cuts are found, the tire(s) should be replaced.**
- **The original tires have built-in tread wear indicators. When the wear indicators are visible, the tire(s) should be replaced.**
- **Tires degrade with age and use. Have tires, including the spare, over 6 years old checked by a qualified technician because some tire damage may not be obvious. Replace the tires as necessary to prevent tire failure and possible personal injury.**
- **Improper service of the spare tire may result in serious personal injury. If it is necessary to repair the spare tire, contact a NISSAN dealer.**
- **For additional information regarding tires, refer to "Important Tire Safety Information" (US) or "Tire Safety Information" (Canada) in the Warranty Information Booklet.**

## Replacing wheels and tires

When replacing a tire, use the same size, tread design, speed rating and load carrying capacity as originally equipped. Recommended types and sizes are shown in “Wheels and tires” in the “Technical and consumer information” section of this manual.

**WARNING**

- **The use of tires other than those recommended or the mixed use of tires of different brands, construction (bias, bias-belted or radial), or tread patterns can adversely affect the ride, braking, handling, VDC system, ground clearance, body-to-tire clearance, tire chain clearance, speedometer calibration, headlight aim and bumper height. Some of these effects may lead to accidents and could result in serious personal injury.**
- **If your vehicle was originally equipped with 4 tires that were the same size and you are only replacing 2 of the 4 tires, install the new tires on the rear axle. Placing new tires on the front axle may cause loss of vehicle control in some driving conditions and cause an accident and personal injury.**
- **If the wheels are changed for any reason, always replace with wheels which have the same off-set dimension. Wheels of a different off-set could cause premature tire wear, degrade vehicle handling characteristics, affect the VDC system and/or interference with the brake discs. Such interference can lead to decreased braking efficiency and/or early brake pad wear. Refer to “Wheels and tires” in the “Technical and consumer information” section of this manual for wheel off-set dimensions.**
- **When a spare tire is mounted or a wheel is replaced, tire pressure will not be indicated, the TPMS will not function and the low tire pressure warning light will flash for approximately 1 minute. The light will remain on after 1 minute. Contact your NISSAN dealer as soon as possible for tire replacement and/or system resetting.**
- **Replacing tires with those not originally specified by NISSAN could affect the proper operation of the TPMS.**
- **Do not install a damaged or deformed wheel or tire even if it has been repaired. Such wheels or tires could have structural damage and could fail without warning.**
- **The use of retread tires is not recommended.**
- **For additional information regarding tires, refer to “Important Tire Safety Information” (US) or “Tire Safety Information” (Canada) in the Warranty Information Booklet.**

### 4x4 Four-wheel drive models

**CAUTION**

**Always use tires of the same type, size, brand, construction (bias, bias-belted or radial), and tread pattern on all four wheels. Failure to do so may result in a circumference difference between tires on the front and rear axles which will cause excessive tire wear and may damage the transmission, transfer case and differential gears.**

If excessive tire wear is found, it is recommended that all four tires be replaced with tires of the same size, brand, construction and tread pattern. The tire pressure and wheel alignment should also be checked and corrected as necessary. Contact a NISSAN dealer.

## Wheel balance

Unbalanced wheels may affect vehicle handling and tire life. Even with regular use, wheels can get out of balance. Therefore, they should be balanced as required.

**Wheel balance service should be performed with the wheels off the vehicle. Spin balancing the wheels on the vehicle could lead to mechanical damage.**

- **For additional information regarding tires, refer to "Important Tire Safety Information" (US) or "Tire Safety Information" (Canada) in the Warranty Information Booklet.**

## Care of wheels

- Wash the wheels when washing the vehicle to maintain their appearance.
- Clean the inner side of the wheels when the wheel is changed or the underside of the vehicle is washed.
- Do not use abrasive cleaners when washing the wheels.
- Inspect wheel rims regularly for dents or corrosion. Such damage may cause loss of pressure or poor seal at the tire bead.
- NISSAN recommends waxing the road wheels to protect against road salt in areas where it is used during winter.

## MEMO

# 9 Technical and consumer information


Capacities and recommended fuel/lubricants . . . . . 9-2
Fuel recommendation (without Flexible Fuel Vehicle option). . . . . 9-3
Flexible fuel vehicle (FFV) fuel recommendation (if so equipped). . . . . 9-5
Engine oil and oil filter recommendations . . . . . 9-6
Air conditioner system refrigerant and oil recommendations . . . . . 9-7
Specifications. . . . . 9-8
Engine . . . . . 9-8
Wheels and tires . . . . . 9-9
Dimensions and weights . . . . . 9-9
When traveling or registering your vehicle in another country . . . . . 9-10
Vehicle identification . . . . . 9-10
Vehicle identification number (VIN) plate . . . . . 9-10
Vehicle identification number (chassis number) . . . . . 9-10
Engine serial number. . . . . 9-11
F.M.V.S.S./C.M.V.S.S. certification label . . . . . 9-11
Emission control information label . . . . . 9-11
Tire and loading information label. . . . . 9-12
Air conditioner specification label. . . . . 9-12
Installing front license plate . . . . . 9-12
Vehicle loading information . . . . . 9-13
Terms . . . . . 9-13
Vehicle load capacity . . . . . 9-13
Securing the load. . . . . 9-15
Utili-track™ channel system (if so equipped) . . . . . 9-16
Loading tips . . . . . 9-21
Truck-camper loading information . . . . . 9-22
Crew Cab Models . . . . . 9-22
King Cab models . . . . . 9-22
Special Body vehicles. . . . . 9-22
Location for center of gravity . . . . . 9-22
Payload weight capacity. . . . . 9-23
Measurement of weights . . . . . 9-23
Towing a trailer . . . . . 9-24
Maximum load limits . . . . . 9-24
Towing load/specification. . . . . 9-28
Towing safety . . . . . 9-30
Flat towing. . . . . 9-39
Snow plow . . . . . 9-39
Uniform tire quality grading . . . . . 9-39
Emission control system warranty . . . . . 9-40
Reporting safety defects . . . . . 9-41
Readiness for inspection/maintenance (I/M) test . . . . . 9-42
Event Data Recorders (EDR). . . . . 9-42
Owner’s Manual/Service Manual order information . . . 9-43

# CAPACITIES AND RECOMMENDED FUEL/LUBRICANTS

**The following are approximate capacities. The actual refill capacities may be a little different. When refilling, follow the procedure described in the "Maintenance and do-it-yourself" section to determine the proper refill capacity.**

| | Capacity (Approximate) | | | Recommended Fluids and Lubricants |
|---|---|---|---|---|
| | US measure | Imp measure | Liter | |
| Fuel | 28 gal | 23-1/4 gal | 105.8 | See "Fuel Recommendation (without Flexible Fuel Vehicle Option)" or "Flexible Fuel Vehicle (FFV) Fuel Recommendation" later in this section. |
| Engine oil *7 | | | | |
| Drain and Refill | | | | |
| With oil filter change | 6-7/8 qt | 5-3/4 qt | 6.5 | ▪ Engine oil with API Certification Mark *1<br>▪ Viscosity SAE 5W-30 |
| Without oil filter change | 6-1/2 qt | 5-1/2 qt | 6.2 | |
| Cooling system | | | | |
| With reservoir | 3-1/4 gal | 2-5/8 gal | 12.2 | Pre-diluted Genuine NISSAN Long Life Antifreeze/Coolant (blue) or equivalent |
| Automatic transmission fluid | Refill to the proper level according to the instructions in the "Maintenance and do-it-yourself" section. | | | Genuine NISSAN Matic S ATF *2 |
| Power steering fluid (PSF) | | | | Genuine NISSAN PSF or equivalent *3 |
| Brake fluid | | | | Genuine NISSAN Super Heavy Duty Brake Fluid *4 or equivalent DOT 3 |
| Multi-purpose grease | — | — | — | NLGI No. 2 (Lithium Soap base) |
| Air conditioning system refrigerant | — | — | — | HFC-134a (R-134a) *5 |
| Air conditioning system oil | — | — | — | Genuine NISSAN A/C System Oil Type S or equivalent *5 |
| Transfer fluid | 2-1/8 qt | 1-3/4 qt | 2.0 | Genuine NISSAN Matic D ATF recommended*6 |
| Front final drive oil | 3-3/8 pt | 2-7/8 pt | 1.6 | Genuine NISSAN Differential Oil Hypoid Super GL-5 80W-90 or API GL-5, Viscosity SAE 80W-90 *8 |
| Rear final drive oil | 4-1/4 pt | 3-1/2 pt | 2.0 | Genuine NISSAN Differential Oil Synthetic 75W-140 or API GL-5 synthetic gear oil, Viscosity SAE 75W-140 *9 |
| Windshield-washer fluid (shared between front and rear wipers) | 1-1/4 gal | 1 gal | 4.5 | Genuine NISSAN Windshield Washer Concentrate Cleaner & Antifreeze or equivalent |

*1: For further details, see "Engine oil and oil filter recommendations" in this section.
*2: If Genuine NISSAN Matic S ATF is not available, Genuine NISSAN Matic J ATF may also be used. Using automatic transmission fluid other than Genuine NISSAN Matic S ATF or Genuine NISSAN Matic J AFT will cause deterioration in driveability and automatic transmission durability, and may damage the automatic transmission, which is not covered by the NISSAN new vehicle limited warranty.
*3: DEXRON™ VI type ATF may also be used.
*4: Available in mainland USA through a NISSAN dealer.
*5: For further details, see "Air conditioner specification label" in this section.
*6: Using fluid other than Genuine NISSAN Matic D ATF will cause deterioration in driveability and transfer durability, and may damage the transfer, which is not covered by the NISSAN new vehicle limited warranty.
*7: For further details, see "Changing engine oil" in the "Maintenance and do-it-yourself" section.
*8: For hot climates, Viscosity SAE 90 is suitable for ambient temperatures above 0° C (32° F).
*9: See a NISSAN dealer for service for synthetic oil.

## FUEL RECOMMENDATION (without Flexible Fuel Vehicle option)

Use unleaded regular gasoline with an octane rating of at least 87 AKI (Anti-Knock Index) number (Research octane number 91).

**⚠ CAUTION**

- **Only vehicles with the E-85 filler door label can operate on E-85. Fuel system or other damage can occur if E-85 is used in vehicles that are not designed to run on E-85.**
- **Using a fuel other than that specified could adversely affect the emission control system, and may also affect the warranty coverage.**
- **Under no circumstances should a leaded gasoline be used, because this will damage the three-way catalyst.**
- **Do not use E-15 or E-85 fuel in your vehicle. Your vehicle is not designed to run on E-15 or E-85 fuel. Using E-15 or E-85 fuel in a vehicle not specifically designed for E-15 or E-85 fuel can adversely affect the emission control devices and systems of the vehicle. Damage caused by such fuel is not covered by the NISSAN new vehicle limited warranty.**
- **U.S. government regulations require ethanol dispensing pumps to be identified by a small, square, orange and black label with the common abbreviation or the appropriate percentage for that region.**

### Gasoline specifications

NISSAN recommends using gasoline that meets the World-Wide Fuel Charter (WWFC) specifications where it is available. Many of the automobile manufacturers developed this specification to improve emission control system and vehicle performance. Ask your service station manager if the gasoline meets the WWFC specifications.

### Reformulated gasoline

Some fuel suppliers are now producing reformulated gasolines. These gasolines are specially designed to reduce vehicle emissions. NISSAN supports efforts towards cleaner air and suggests that you use reformulated gasoline when available.

### Gasoline containing oxygenates

Some fuel suppliers sell gasoline containing oxygenates such as ethanol, MTBE and methanol with or without advertising their presence. NISSAN does not recommend the use of fuels of which the oxygenate content and the fuel compatibility for your NISSAN cannot be readily determined. If in doubt, ask your service station manager.

If you use oxygenate-blend gasoline, please take the following precautions as the usage of such fuels may cause vehicle performance problems and/or fuel system damage.

- **The fuel should be unleaded and have an octane rating no lower than that recommended for unleaded gasoline.**
- **If an oxygenate-blend other than methanol blend is used, it should contain no more than 10% oxygenate. (MTBE may, however, be added up to 15%.)**

- **E-15 fuel contains more than 10% oxygenate. E-15 fuel will adversely affect the emission control devices and systems of the vehicle and should not be used. Damage caused by such fuel is not covered by the NISSAN new vehicle limited warranty.**
- **If a methanol blend is used, it should contain no more than 5% methanol (methyl alcohol, wood alcohol). It should also contain a suitable amount of appropriate cosolvents and corrosion inhibitors. If not properly formulated with appropriate cosolvents and corrosion inhibitors, such methanol blends may cause fuel system damage and/or vehicle performance problems. At this time, sufficient data is not available to ensure that all methanol blends are suitable for use in NISSAN vehicles.**

If any driveability problems such as engine stalling and difficult hot-starting are experienced after using oxygenate-blend fuels, immediately change to a non-oxygenate fuel or a fuel with a low blend of MTBE.

**Take care not to spill gasoline during refueling. Gasoline containing oxygenates can cause paint damage.**

## E–15 fuel

E-15 fuel is a mixture of approximately 15% fuel ethanol and 85% unleaded gasoline. E-15 can only be used in vehicles designed to run on E-15 fuel. Do not use E-15 in your vehicle. U.S. government regulations require fuel ethanol dispensing pumps to be identified with small, square, orange and black label with the common abbreviation or the appropriate percentage for that region.

## E–85 fuel

E-85 fuel is a mixture of approximately 85% fuel ethanol and 15% unleaded gasoline. E-85 can only be used in a Flexible Fuel Vehicle (FFV). Do not use E-85 in your vehicle. U.S. government regulations require fuel ethanol dispensing pumps to be identified by a small, square, orange and black label with the common abbreviation or the appropriate percentage for that region.

## Aftermarket fuel additives

NISSAN does not recommend the use of any aftermarket fuel additives (for example, fuel injector cleaner, octane booster, intake valve deposit removers, etc.) which are sold commercially. Many of these additives intended for gum, varnish or deposit removal may contain active solvents or similar ingredients that can be harmful to the fuel system and engine.

## Octane rating tips

**Using unleaded gasoline with an octane rating lower than recommended can cause persistent, heavy “spark knock.” (“Spark knock” is a metallic rapping noise.) If severe, this can lead to engine damage. If you detect a persistent heavy spark knock even when using gasoline of the stated octane rating, or if you hear steady spark knock while holding a steady speed on level roads, have a NISSAN dealer correct the condition. Failure to correct the condition is misuse of the vehicle, for which NISSAN is not responsible.**

Incorrect ignition timing may result in spark knock, after-run and/or overheating, which may cause excessive fuel consumption or engine damage. If any of the above symptoms are encountered, have your vehicle checked at a NISSAN dealer.

**However, now and then you may notice light spark knock for a short time while accelerating or driving up hills. This is not a cause for concern, because you get the greatest fuel benefit when there is light spark knock for a short time under heavy engine load.**

## FLEXIBLE FUEL VEHICLE (FFV) FUEL RECOMMENDATION (if so equipped)

Your vehicle is designed to use (E-85) Fuel Ethanol, “Regular” unleaded regular gasoline or any percentage of the two fuels combined.

**U.S. government regulations require Fuel Ethanol dispensing pumps to have a small, square, orange and black label with the common abbreviation or the appropriate percentage for that region.**

**⚠CAUTION**

**Use of other fuels such as Fuel Methanol may cause powertrain damage or a loss of vehicle performance.**

**Under no circumstances should a leaded gasoline be used, because this will cause damage to the three-way catalyst.**

### General information

This information is for Flexible Fuel vehicles (FFV) only. FFV vehicles can be identified by the fuel filler door label that states Ethanol (E-85) or Unleaded Gasoline Only. This section only covers those subjects that are unique to Flexible Fuel vehicles.

**⚠CAUTION**

**Only vehicles with the E-85 filler door label can operate on E-85. Fuel system or other damage can occur if E-85 is used in vehicles that are not designed to run on E-85.**

### Ethanol Fuel (E-85)

E-85 is a mixture of approximately 85% fuel ethanol and 15% unleaded gasoline.

**⚠WARNING**

- **Ethanol vapors are extremely flammable and could cause serious personal injury.**
- **Never have any smoking materials lit in or near the vehicle when removing the fuel filler cap or filling the tank.**
- **Do not use E-85 as a cleaning agent and never use it near an open flame.**

#### Fuel requirements

Your vehicle will operate on both unleaded regular gasoline with an octane rating of at least 87 AKI (Anti-Knock Index) number (Research octane number 91), or E-85 fuel, or any mixture of these two.

For the best starting and vehicle driveability results, do not continually switch between E-85 and unleaded regular gasoline. If you must switch fuels, NISSAN recommends the following:

- do not switch when the fuel gauge indicates less than 1/4 full
- add more than 5 gallons of fuel
- operate the vehicle immediately after refueling for a period of at least 5 minutes

**NOTE:**

**When the ambient temperature is above 90°F (32°C), you may experience hard starting and rough idle following start up even if the above recommendations are followed.**

#### Starting

The characteristics of E-85 fuel make it unsuitable for use when ambient temperatures fall below 0°F (-18°C). In the range of 0°F (-18°C) to 32°F (0°C), you may experience an increase in the time it takes for you engine to start, and a deterioration in drivability (sags and/or hesitations) until the engine is fully warmed up.

**Fuel consumption**

Because E-85 fuel contains less energy per gallon than gasoline, you will experience an increase in fuel consumption. You can expect your fuel mileage to decrease by about 30% compared to gasoline operation.

**Replacement parts**

Many components in your Flexible Fuel Vehicle (FFV) are designed to be compatible with ethanol. Always be sure that your vehicle is serviced with correct ethanol compatible parts.

**⚠ CAUTION**

**Replacing fuel system components with non-ethanol compatible components can damage your vehicle and may also affect the warranty coverage.**

**Maintenance**

If you operate your vehicle using E-85 fuel, follow the correct maintenance log shown in the "NISSAN Service and Maintenance Guide".

**⚠ CAUTION**

**Do not use ethanol mixture greater than 85% in your vehicle. It will cause difficulty in cold starting and may affect drivability.**

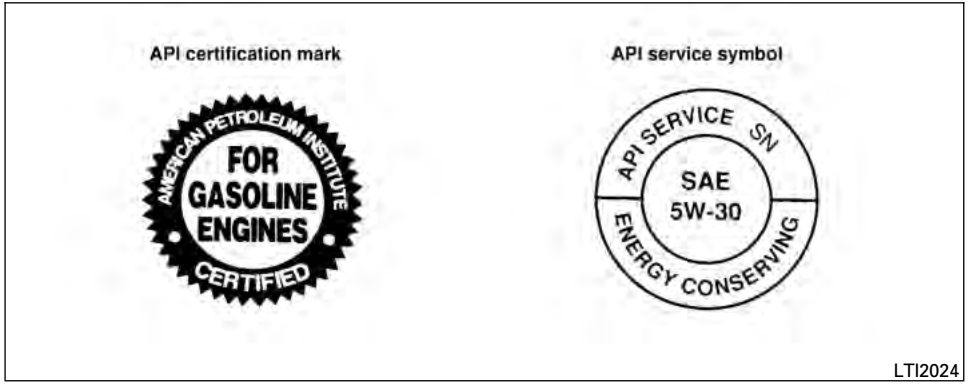


## ENGINE OIL AND OIL FILTER RECOMMENDATIONS

### Selecting the correct oil

It is essential to choose the correct grade, quality and viscosity engine oil to ensure satisfactory engine life and performance. See "Capacities and recommended fuel/lubricants" earlier in this section. NISSAN recommends the use of an energy conserving oil in order to improve fuel economy.

Select only engine oils that meet the American Petroleum Institute (API) certification or International Lubricant Standardization and Approval Committee (ILSAC) certification and SAE viscosity standard. These oils have the API certification mark on the front of the container. Oils which do not have the specified quality label should not be used as they could cause engine damage.

### Oil additives

NISSAN does not recommend the use of oil additives. The use of an oil additive is not necessary when the proper oil type is used and maintenance intervals are followed.

Oil which may contain foreign matter or has been previously used should not be used.

## Oil viscosity

The engine oil viscosity or thickness changes with temperature. Because of this, it is important to select the engine oil viscosity based on the temperatures at which the vehicle will be operated before the next oil change. Choosing an oil viscosity other than that recommended could cause serious engine damage.

## Selecting the correct oil filter

Your new NISSAN vehicle is equipped with a high-quality genuine NISSAN oil filter. When replacing, use a genuine NISSAN oil filter or its equivalent for the reason described in “Change intervals.”

## Change intervals

The oil and oil filter change intervals for your engine are based on the use of the specified quality oils and filters. Using engine oil and filters that are not of the specified quality, or exceeding recommended oil and filter change intervals could reduce engine life. Damage to the engine caused by improper maintenance or use of incorrect oil and filter quality and/or viscosity is not covered by the NISSAN new vehicle limited warranty.

Your engine was filled with a high-quality engine oil when it was built. You do not have to change the oil before the first recommended change interval. Oil and filter change intervals depend upon how you use your vehicle.

Operation under the following conditions may require more frequent oil and filter changes:

- repeated short distance driving at cold outside temperatures
- driving in dusty conditions
- extensive idling
- towing a trailer
- stop and go commuting

Refer to the “NISSAN Service and Maintenance Guide” for the maintenance schedule.

# AIR CONDITIONER SYSTEM REFRIGERANT AND OIL RECOMMENDATIONS

**The air conditioner system in your NISSAN vehicle must be charged with the refrigerant HFC-134a (R-134a) and NISSAN A/C system oil Type S or the exact equivalents.**

**⚠ CAUTION**

**The use of any other refrigerant or oil will cause severe damage to the air conditioning system and will require the replacement of all air conditioner system components.**

The refrigerant HFC-134a (R-134a) in your NISSAN vehicle does not harm the earth’s ozone layer. Although this refrigerant does not affect the earth’s atmosphere, certain government regulations require the recovery and recycling of any refrigerant during automotive air conditioner system service. A NISSAN dealer has the trained technicians and equipment needed to recover and recycle your air conditioner system refrigerant.

Contact a NISSAN dealer when servicing your air conditioner system.

## ENGINE

| Model | VK56DE | |
|---|---|---|
| Type | Gasoline, 4-cycle, DOHC | |
| Cylinder arrangement | 8-cylinder, V-block, Slanted at 90° | |
| Bore x Stroke | in (mm) 3.858 x 3.622 (98 x 92) | |
| Displacement | cu in ($cm^3$) 338.78 (5,552) | |
| Firing order | 1–8–7–3–6–5–4–2 | |
| Idle speed | No adjustment is necessary. | |
| A/T (in “N” position) | | |
| Ignition timing (degree B.T.D.C. at idle speed) | | |
| CO % at idle | | |
| Spark plug | Standard Model<br>DILFR5A-11 | FFV Model<br>DILFR5A-11D |
| Spark plug gap (Nominal) | in (mm) 0.043 (1.1) | |
| Camshaft operation | Timing chain | |

**This spark ignition system complies with the Canadian standard ICES-002.**

## WHEELS AND TIRES

| | |
|---|---|
| Wheels | |
| | 18 x 8.0JJ |
| | 20 x 8.0JJ |
| Tires | |
| | P265/70R18 |
| | P275/70R18 |
| | P275/60R20 |
| Spare tire | Full size |

## DIMENSIONS AND WEIGHTS

| | | | |
|---|---|---|---|
| Overall length | | | |
| Short wheel base (SWB) | | in (mm) | 224.6 (5,704) |
| Long wheel base (LWB) | | in (mm) | 244.3 (6,204) |
| Overall width | | in (mm) | 79.5 (2,019) |
| Overall height | | | |
| King Cab - SWB | 4x2 (S, SV) | in (mm) | 74.6 (1,896) |
| | 4x4 (S, SV) | in (mm) | 76.1 (1,934) |
| | 4x4 (Pro-4X) | in (mm) | 76.6 (1,946) |
| King Cab - LWB | 4x2 (S, SV) | in (mm) | 74.4 (1,891) |
| | 4x4 (S, SV) | in (mm) | 76.0 (1,931) |
| Crew Cab - SWB | 4x2 (S, SV) | in (mm) | 74.7 (1,898) |
| | 4x2 (SL) | in (mm) | 75.1 (1,908) |
| | 4x4 (S, SV) | in (mm) | 76.3 (1,939) |
| | 4x4 (Pro-4X) | in (mm) | 76.9 (1,954) |
| | 4x4 (SL) | in (mm) | 76.7 (1,949) |
| Crew Cab - LWB | 4x2 (S, SV) | in (mm) | 74.7 (1,898) |
| | 4x2 (SL) | in (mm) | 74.9 (1,903) |
| | 4x4 (S, SV) | in (mm) | 76.3 (1,939) |
| | 4x4 (Pro-4X) | in (mm) | 76.6 (1,946) |
| | 4x4 (SL) | in (mm) | 76.4 (1,941) |
| Front Track | | | |
| 18 inch tire | | in (mm) | 67.9 (1,725) |
| 20 inch tire | | in (mm) | 68.1 (1,729) |
| Rear Track | | | |
| 18 inch tire | | in (mm) | 67.9 (1,725) |
| 20 inch tire | | in (mm) | 68.1 (1,729) |
| Wheelbase | | | |
| Short wheel base | | in (mm) | 139.8 (3,550) |
| Long wheel base | | in (mm) | 159.5 (4,050) |
| Gross vehicle weight rating | | lb (kg) | See the "F.M.V.S.S./C.M.V.S.S. certification label" on the center pillar between the driver's side front and rear doors. |
| Gross axle weight rating | | | |
| Front | | lb (kg) | |
| Rear | | lb (kg) | |

## WHEN TRAVELING OR REGISTERING YOUR VEHICLE IN ANOTHER COUNTRY

**When planning to drive your NISSAN vehicle in another country,** you should first find out if the fuel available is suitable for your vehicle's engine.

Using fuel with an octane rating that is too low may cause engine damage. All gasoline vehicles must be operated with unleaded gasoline. Therefore, avoid taking your vehicle to areas where appropriate fuel is not available.

**When transferring the registration of your vehicle to another country, state, province or district,** it may be necessary to modify the vehicle to meet local laws and regulations.

The laws and regulations for motor vehicle emission control and safety standards vary according to the country, state, province or district; therefore, vehicle specifications may differ.

**When any vehicle is to be taken into another country, state, province or district and registered, its modifications, transportation, and registration are the responsibility of the user. NISSAN is not responsible for any inconvenience that may result.**

## VEHICLE IDENTIFICATION

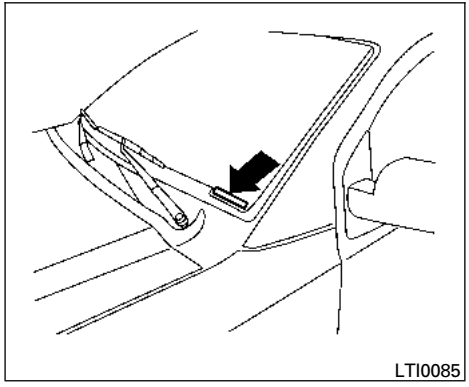


### VEHICLE IDENTIFICATION NUMBER (VIN) PLATE

The vehicle identification number (VIN) plate is attached as shown. This number is the identification for your vehicle and is used in the vehicle registration.

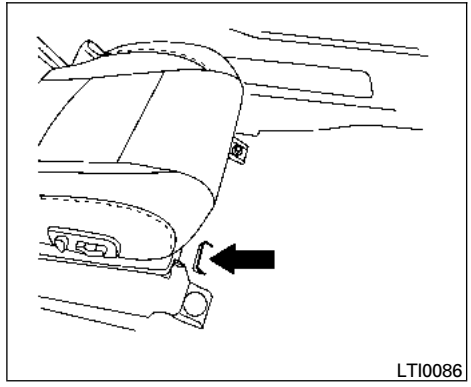


### VEHICLE IDENTIFICATION NUMBER (chassis number)

The vehicle identification number is located as shown.

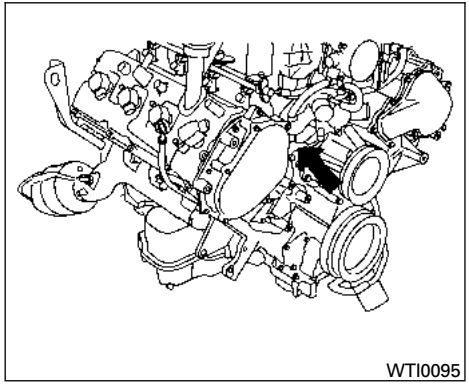


## ENGINE SERIAL NUMBER

The number is stamped on the engine as shown.

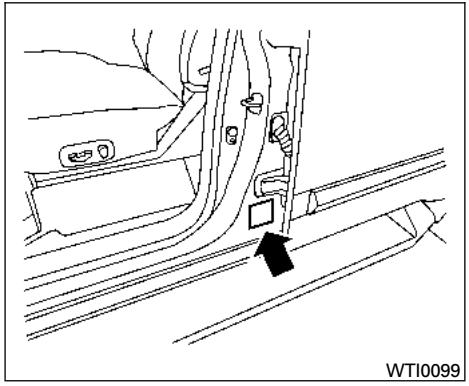


## F.M.V.S.S./C.M.V.S.S. CERTIFICATION LABEL

The Federal/Canadian Motor Vehicle Safety Standard (F.M.V.S.S./C.M.V.S.S.) certification label is affixed as shown. This label contains valuable vehicle information, such as: Gross Vehicle Weight Ratings (GVWR), Gross Axle Weight Rating (GAWR), month and year of manufacture, Vehicle Identification Number (VIN), etc. Review it carefully.

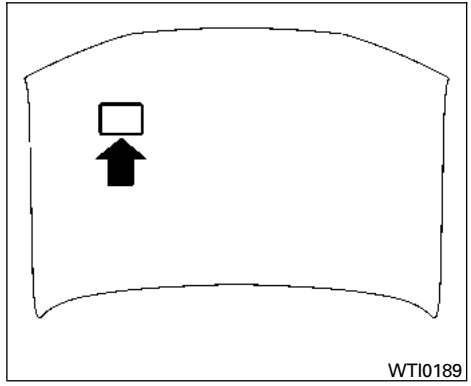


## EMISSION CONTROL INFORMATION LABEL

The emission control information label is attached to the underside of the hood as shown.

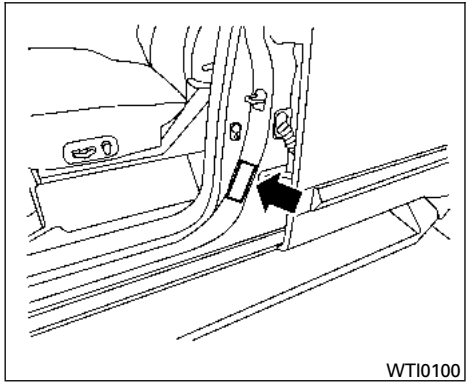


## TIRE AND LOADING INFORMATION LABEL

The cold tire pressure is shown on the Tire and Loading Information label. The label is located as shown.

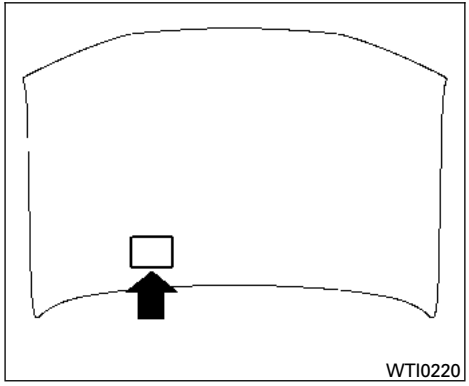


## AIR CONDITIONER SPECIFICATION LABEL

The air conditioner specification label is affixed to the underside of the hood as shown.

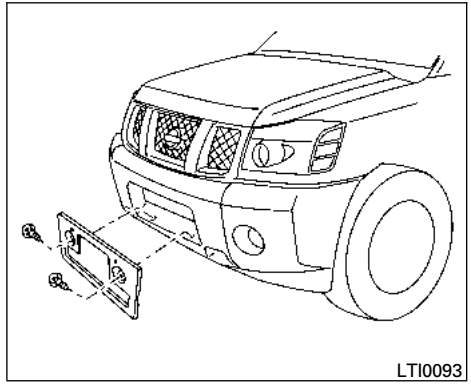


Use the following steps to mount the front license plate:

1. Make holes on the plastic finisher at the location mark (small dimple) using a 0.20 in (5 mm) drill. Apply light pressure to the drill. Install the license plate holder using the two screws provided with the holder.
2. Mount the license plate **using two M6-14mm bolts.**

   **License plate bolt tightening torque: 3.8 - 4.7 ft-lb (5.10 - 6.37 N·m)**

**⚠WARNING**

- **It is extremely dangerous to ride in a cargo area inside a vehicle. In a collision, people riding in these areas are more likely to be seriously injured or killed.**
- **Do not allow people to ride in any area of your vehicle that is not equipped with seats and seat belts.**
- **Be sure everyone in your vehicle is in a seat and using a seat belt properly.**

## TERMS

It is important to familiarize yourself with the following terms before loading your vehicle:

- Curb Weight (actual weight of your vehicle) - vehicle weight including: standard and optional equipment, fluids, emergency tools, and spare tire assembly. This weight **does not** include passengers and cargo.
- GVW (Gross Vehicle Weight) - curb weight plus the combined weight of passengers and cargo.
- GVWR (Gross Vehicle Weight Rating) - maximum total combined weight of the unloaded vehicle, passengers, luggage, hitch, trailer tongue load and any other optional equipment. This information is located on the F.M.V.S.S./C.M.V.S.S. certification label.
- GAWR (Gross Axle Weight Rating) - maximum weight (load) limit specified for the front or rear axle. This information is located on the F.M.V.S.S./C.M.V.S.S. certification label.
- GCWR (Gross Combined Weight rating) - The maximum total weight rating of the vehicle, passengers, cargo, and trailer.
- Vehicle Capacity Weight, Load limit, Total load capacity - maximum total weight limit specified of the load (passengers and cargo) for the vehicle. This is the maximum combined weight of occupants and cargo that can be loaded into the vehicle. If the vehicle is used to tow a trailer, the trailer tongue weight must be included as part of the cargo load. This information is located on the Tire and Loading Information label.
- Cargo capacity - permissible weight of cargo, the subtracted weight of occupants from the load limit.

## VEHICLE LOAD CAPACITY

Before driving a loaded vehicle, confirm that you do not exceed the Gross Vehicle Weight Rating (GVWR) or the Gross Axle Weight Rating (GAWR) for your vehicle. Both the GVWR and GAWR are located on the F.M.V.S.S./C.M.V.S.S. certification label. See “Measurement of weights” later in this section.

Do not exceed the load limit of your vehicle shown as “The combined weight of occupants and cargo” on the Tire and Loading Information label. Do not exceed the number of occupants shown as “Seating Capacity” on the Tire and Loading Information label.

To get “the combined weight of occupants and cargo”, add the weight of all occupants, then add the total luggage weight. Examples are shown in the following illustration.

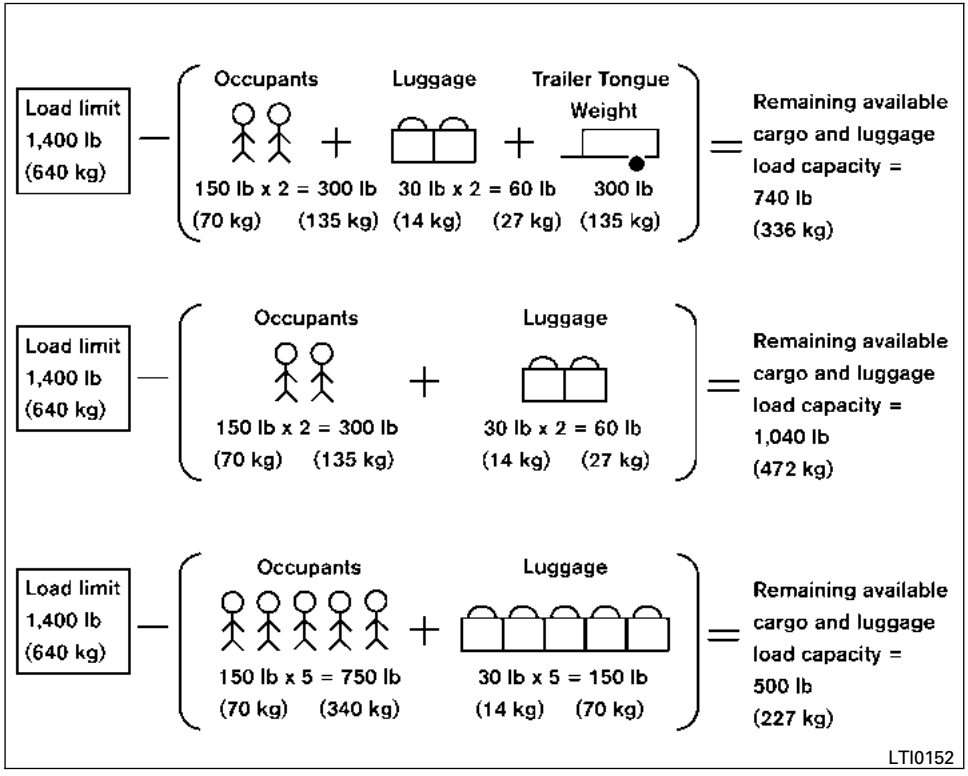


**Example**

Steps for determining correct load limit

1. Locate the statement “The combined weight of occupants and cargo should never exceed XXX lbs or XXX kg” on your vehicle’s placard.
2. Determine the combined weight of the driver and passengers that will be riding in your vehicle.
3. Subtract the combined weight of the driver and passengers from XXX lbs or XXX kg.
4. The resulting figure equals the available amount of cargo and luggage load capacity. For example, if the XXX amount equals 1,400 lbs. and there will be five 150 lb. passengers in your vehicle, the amount of available cargo and luggage load capacity is 650 lbs. (1,400-750 (5 X 150) = 650 lbs) or (640-340 (5 X 70) = 300 kg.)
5. Determine the combined weight of luggage and cargo being loaded on the vehicle. That weight may not safely exceed the available cargo and luggage load capacity calculated in Step 4.
6. If your vehicle will be towing a trailer, load from your trailer will be transferred to your vehicle. Consult this manual to determine how this reduces the available cargo and luggage load capacity of your vehicle.

Before driving a loaded vehicle, confirm that you do not exceed the Gross Vehicle Weight Rating (GVWR) or the Gross Axle Weight Rating (GAWR) for your vehicle. See “Measurement of weights” later in this section.

Also check tires for proper inflation pressures. See the Tire and Loading Information label.

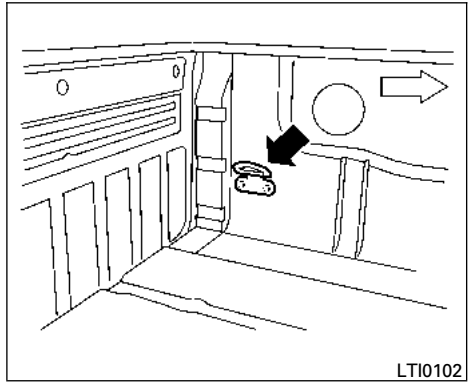


## SECURING THE LOAD

For your convenience, tie down hooks are placed at each corner of the truck box. These may be used to help secure cargo loaded into the truck box.

**⚠WARNING**

- **Properly secure all cargo with ropes or straps to help prevent it from sliding or shifting. Do not place cargo higher than the seatbacks. In a sudden stop or collision, unsecured cargo could cause personal injury.**
- **Do not load your vehicle any heavier than the GVWR or the maximum front and rear GAWRs. If you do, parts of your vehicle can break, tire damage could occur, or it can change the way your vehicle handles. This could result in loss of control and cause personal injury.**

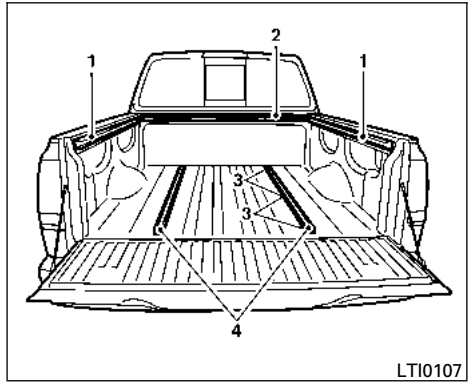


1. Side channels
2. Header channel
3. Channel sections
4. Floor channels

## UTILI-TRACK™ CHANNEL SYSTEM (if so equipped)

**⚠WARNING**

- **Properly install and tighten the tie-down cleats into the Utili-track™ channel system. Also, do not attach any rope or straps directly to the channel. Failure to properly install the tie-down cleats or attaching ropes or straps directly to the channel can cause the cargo to become unsecured. In a sudden stop or collision, unsecured cargo could cause personal injury.**
- **Properly secure all cargo with ropes or straps to help prevent it from sliding or shifting. In a sudden stop or collision, unsecured cargo could cause personal injury.**

The Utili-track™ channel system allows you to move tie-down clamps in the bed to the best location to secure a load.

The tie-down cleats must be installed so the clamp is properly seated in the notches in the rail. If the tie-down cleat is not seated in the notches, it will not be flush with the rail and cannot be properly tightened. The bolt in the center of the cleat must be tightened hand tight (20 – 40 in-lbs)

Check the tightness of the tie-down cleat periodically during a trip to make sure the center bolt has not become loose.

Install the tie-down cleat as follows:

1. Remove the channel protectors by sliding them out the back of the truck bed. Properly store the channel protectors.
2. Loosen the center bolt completely.

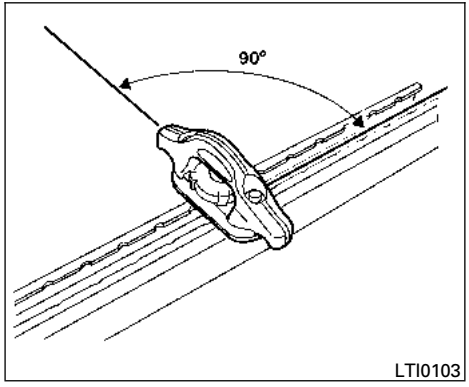


3. Insert the cleat into the channel perpendicular to the channel as shown. Then rotate the cleat clockwise 90° and slide it to the desired location.

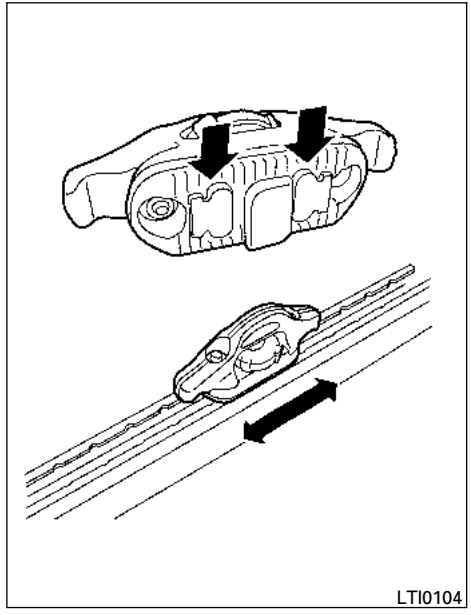


4. Position the cleat so the nubs on the bottom fully seat into the channel detents.

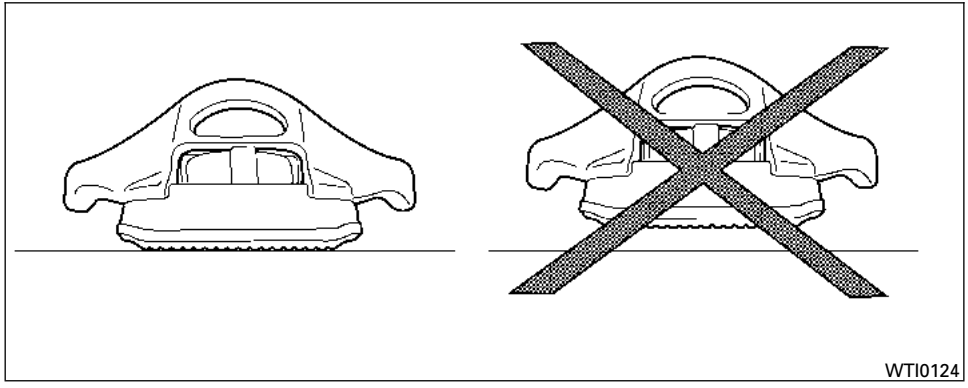


5. There should be no gap between the bottom of the cleat and the top of the channel. Tighten the center bolt hand tight (20-40 in-lbs ).

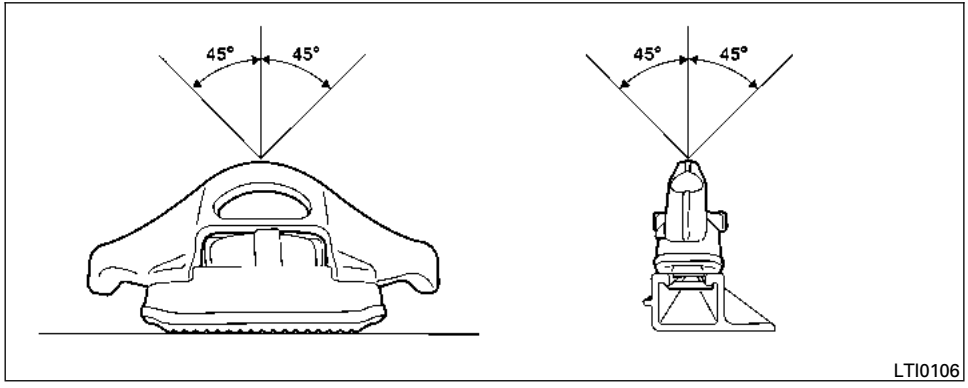


**⚠ CAUTION**

- **Install only one cleat per section of channel.**
- **Applying loads at angles to the cleats greater then 45° or loads greater than 150 lbs. (header and floor channels) or 200 lbs. (side channels) may cause damage to the channel or bed.**

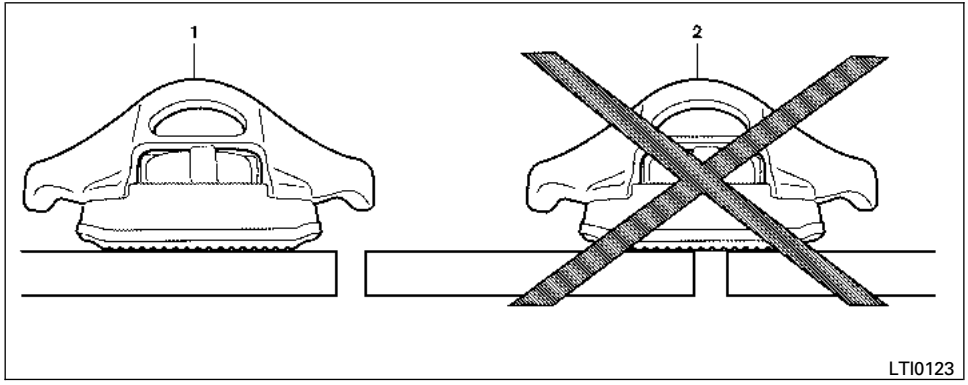


**1 correct installation, 2 incorrect installation**

**⚠WARNING**

**Do not install accessories over the gap between the front and rear side channels. Doing this could affect the rear structure in certain rear impacts, which could result in serious injury.**

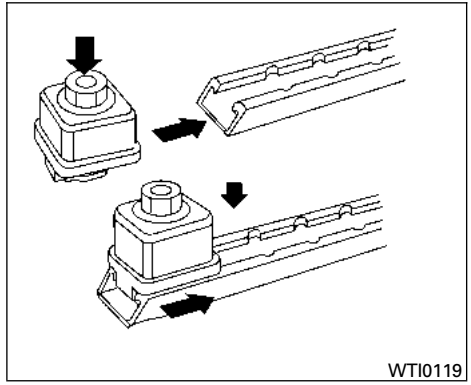


**⚠CAUTION**

**Properly secure all cargo with ropes or straps to prevent it from sliding or shifting. Use the channel end stoppers to help secure items in the channels from sliding off the end of the truck bed.**

## Channel end stoppers

The channel end stoppers should be used to help prevent accessories installed in the channels from sliding or shifting off the end of the truck bed.

They must be installed so they are properly seated in the detents in the channel.

Install the channels end stoppers as follows:

1. Remove the channel protectors by sliding them out the back of the truck bed. Properly store the channel protectors.
2. Loosen the bolt on the center of the end stopper with the provided wrench and insert it into the channel.
3. Position the end stopper to the desired location on the channel so the nubs on the bottom of the end stopper fully seat into the channel detents.
4. Tighten the bolt on the center of the end stopper with the provided wrench.

## LOADING TIPS

- The GVW must not exceed GVWR or GAWR as specified on the F.M.V.S.S./C.M.V.S.S. certification label.
- Do not load the front and rear axle to the GAWR. Doing so will exceed the GVWR.

**⚠ WARNING**

- **Properly secure all cargo with ropes or straps to help prevent it from sliding or shifting. Do not place cargo higher than the seatbacks. In a sudden stop or collision, unsecured cargo could cause personal injury.**
- **Do not load your vehicle any heavier than the GVWR or the maximum front and rear GAWRs. If you do, parts of your vehicle can break, tire damage could occur, or it can change the way your vehicle handles. This could result in loss of control and cause personal injury.**
- **Overloading not only can shorten the life of your vehicle and the tire, but can also cause unsafe vehicle handling and longer braking distances. This may cause a premature tire failure which could result in a serious accident and personal injury. Failures caused by overloading are not covered by the vehicle's warranty.**

## CREW CAB MODELS

**Crew Cab short wheel base models should not be used to carry a slide-in camper.**

## KING CAB MODELS

This information is provided for you to properly install a slide-in camper and is based on the National Highway Traffic Safety Administration regulations. It is recommended that, before installing the camper, you carefully read the following information and ensure that the camper meets the specifications.

This information may not apply to some Canada model vehicles.

## SPECIAL BODY VEHICLES

Some vehicles are equipped with commercial or camper bodies. However, this Owner's Manual does not cover these options. For further information, please refer to the body manufacturer's instruction manual.

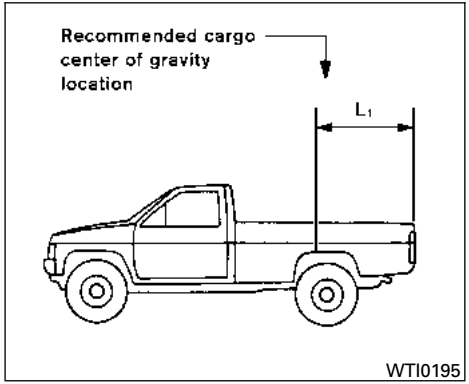


## LOCATION FOR CENTER OF GRAVITY

The illustration indicates the recommended cargo center of gravity location.

King Cab short wheel base:

L1 = 43.9 in (1,115.7 mm)

Crew Cab long wheel base:

L1 = 47.9 in (1,215.7 mm)

**⚠ WARNING**

**Improper loading may be dangerous. If a load is too far back, it can affect handling characteristics. If a load is too far forward, the front axle may be overloaded.**

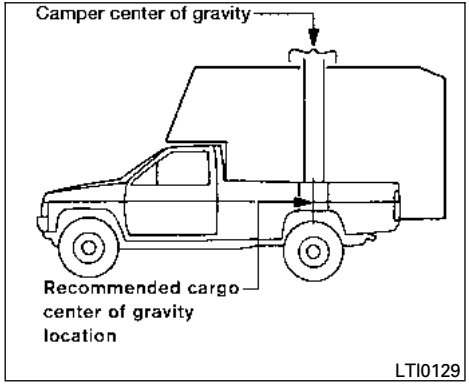


When the truck is used to carry a slide-in camper, the total cargo load of the truck consists of the camper manufacturer's weight figure, plus:

- the weight of installed additional camper equipment not included in the camper manufacturer's weight figure,
- the weight of camper cargo,
- and the weight of occupants in the camper.

The total cargo load should not exceed the truck's pay load weight rating and the camper's center of gravity should fall within the truck's recommended center of gravity location when installed.

**⚠WARNING**

**Overloading or improper loading can adversely affect vehicle handling, braking and performance and may lead to accidents.**

## PAYLOAD WEIGHT CAPACITY

The vehicle payload weight capacity shown on the Tire and Loading Information label, see "Tire and Loading Information label" in this section, indicates the maximum total weight of passengers, optional equipment (air conditioning, trailer hitch, etc) and cargo that your vehicle is designed to carry.

Before driving a loaded vehicle, confirm that you do not exceed the Gross Vehicle Weight Rating (GVWR) or the Gross Axle Weight Rating (GAWR) for your vehicle. See ''Vehicle Loading Information'' earlier in this section for details.

Also check tires for proper inflation pressures. See the Tire and Loading Information label.

## MEASUREMENT OF WEIGHTS

Secure loose items to prevent weight shifts that could affect the balance of your vehicle. When the vehicle is loaded, drive to a scale and weigh the front and the rear wheels separately to determine axle loads. Individual axle loads should not exceed either of the gross axle weight ratings (GAWR). The total of the axle loads should not exceed the gross vehicle weight rating (GVWR). These ratings are given on the vehicle certification label. If weight ratings are exceeded, move or remove items to bring all weights below the ratings.

**⚠WARNING**

**Overloading or improper loading of a trailer and its cargo can adversely affect vehicle handling, braking and performance and may lead to accidents.**

**⚠CAUTION**

- **Do not tow a trailer or haul a heavy load for the first 500 miles (800 km). Your engine, axle or other parts could be damaged.**
- **For the first 500 miles (800 km) that you tow a trailer, do not drive over 50 mph (80 km/h) and do not make starts at full throttle. This helps the engine and other parts of your vehicle wear in at the heavier loads.**

Your new vehicle was designed to be used primarily to carry passengers and cargo. Remember that towing a trailer places additional loads on your vehicle's engine, drive train, steering, braking and other systems.

A NISSAN Towing Guide (U.S. only) is available on the website at www.nissanusa.com. This guide includes information on trailer towing capability and the special equipment required for proper towing.

## MAXIMUM LOAD LIMITS

### Maximum trailer loads

Never allow the total trailer load to exceed the value specified in the "Towing Load/Specification" chart found later in this section. The total trailer load equals trailer weight plus its cargo weight.

- **When towing a trailer load of 3,500 lbs. (1,587 kg) or more, trailers with a brake system MUST be used.**

The maximum Gross Combined Weight Rating (GCWR) should not exceed the value specified in the following "Towing Load/Specification" chart.

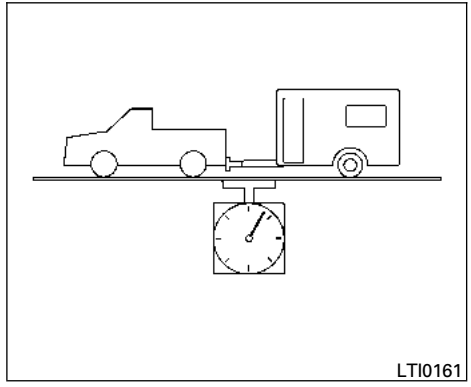


The GCWR equals the combined weight of the towing vehicle (including passengers and cargo) plus the total trailer load. Towing loads greater than these or using improper towing equipment could adversely affect vehicle handling, braking and performance.

The ability of your vehicle to tow a trailer is not only related to the maximum trailer loads, but also the places you plan to tow. Tow weights appropriate for level highway driving may have to be reduced for low traction situations (for example, on slippery boat ramps).

Temperature conditions can also affect towing. For example, towing a heavy trailer in high outside temperatures on graded roads can affect engine performance and cause overheating. The engine protection mode, which helps reduce the chance of engine damage, could activate and automatically decrease engine power. Vehicle speed may decrease under high load. Plan your trip carefully to account for trailer and vehicle load, weather and road conditions.

**⚠ WARNING**

**Overheating can result in reduced engine power and vehicle speed. The reduced speed may be lower than other traffic, which could increase the chance of a collision. Be especially careful when driving. If the vehicle cannot maintain a safe driving speed, pull to the side of the road in a safe area. Allow the engine to cool and return to normal operation. See "If your vehicle overheats" in the "In case of emergency" section of this manual.**

**⚠ CAUTION**

**Vehicle damage resulting from improper towing procedures is not covered by NISSAN warranties.**

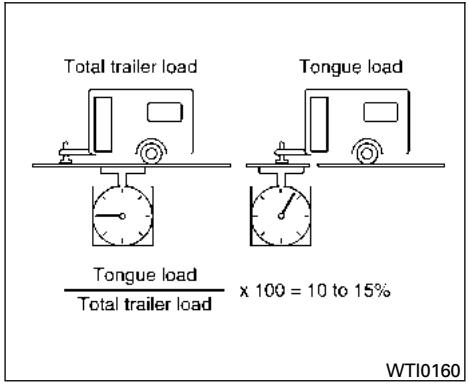


## Tongue load

When using a weight carrying or a weight distributing hitch, keep the tongue load between 10 - 15 percent of the total trailer load or use the trailer tongue load specified by the trailer manufacturer. The tongue load must be within the maximum tongue load limits shown in the following "Towing Load/Specification" chart. If the tongue load becomes excessive, rearrange cargo to allow for proper tongue load.

## King pin load

When using a 5th wheel hitch, keep the tongue load between 15 - 25 percent of the total trailer load within the maximum king pin load limits shown in the following "Towing Load/Specification" chart. If the king pin load becomes excessive, rearrange cargo to allow for proper king pin load.

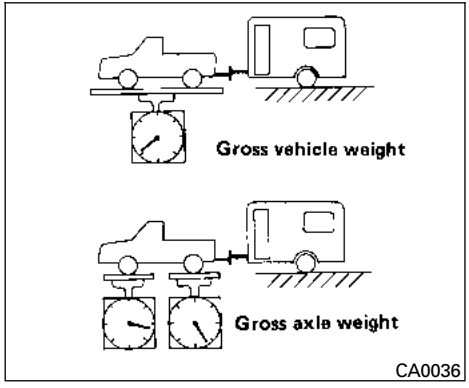


## Maximum Gross Vehicle Weight (GVW)/maximum Gross Axle Weight (GAW)

The GVW of the towing vehicle must not exceed the Gross Vehicle Weight Rating (GVWR) shown on the F.M.V.S.S./C.M.V.S.S. certification label. The GVW equals the combined weight of the unloaded vehicle, passengers, luggage, hitch, trailer tongue load and any other optional equipment. In addition, front or rear GAW must not exceed the Gross Axle Weight Rating (GAWR) shown on the F.M.V.S.S./C.M.V.S.S. certification label.

Towing capacities are calculated assuming a base vehicle with driver and any options required to achieve the rating. Additional passengers, cargo and/or optional equipment, such as the trailer hitch, will add weight to the vehicle and reduce your vehicle's maximum towing capacity and trailer tongue load.

The vehicle and trailer need to be weighed to confirm the vehicle is within the GVWR, Front GAWR, Rear GAWR, Gross Combined Weight Rating (GCWR) and Towing capacity.

All vehicle and trailer weights can be measured using platform type scales commonly found at truck stops, highway weigh stations, building supply centers or salvage yards.

To determine the available payload capacity for tongue/king pin load, use the following procedure.

1. Locate the GVWR on the F.M.V.S.S./C.M.V.S.S. certification label.
2. Weigh your vehicle on the scale with all of the passengers and cargo that are normally in the vehicle when towing a trailer.
3. Subtract the actual vehicle weight from the GVWR. The remaining amount is the available maximum tongue/king pin load.

To determine the available towing capacity, use the following procedure.

1. Find the GCWR for your vehicle on the "Towing Load/Specification" chart found later in this section.
2. Subtract the actual vehicle weight from the GCWR. The remaining amount is the available maximum towing capacity.

To determine the Gross Trailer Weight, weigh your trailer on a scale with all equipment and cargo, that are normally in the trailer when it is towed. Make sure the Gross trailer weight is not more than the Gross Trailer Weight Rating shown on the trailer and is not more than the calculated available maximum towing capacity.

Also weigh the front and rear axles on the scale to make sure the Front Gross Axle Weight and Rear Gross Axle Weight are not more than Front Gross Axle Weight and Rear Gross Axle Weight on the F.M.V.S.S./C.M.V.S.S. certification label. The cargo in the trailer and vehicle may need to be moved or removed to meet the specified ratings.

Example:

- Gross Vehicle Weight (GVW) as weighed on a scale - including passengers, cargo and hitch - 6,200 lb. (2,812 kg).
- Gross Vehicle Weight Rating (GVWR) from F.M.V.S.S./C.M.V.S.S. certification label - 7,100 lb. (3,220 kg).
- Gross Combined Weight Rating (GCWR) from "Towing Load/Specification" chart - 15,100 lb. (6,848 kg).
- Maximum Trailer towing capacity from "Towing Load/Specification" chart - 9,200 lb. (4,173 kg).

| | |
|---|---|
| 7,100 lb. (3,220 kg) | GVWR |
| – 6,200 lb. (2,812 kg) | GVW |
| = 900 lb. (408 kg) | Available for tongue/ king pin weight |
| 15,100 lb. (6,848 kg) | GCWR |
| – 6,200 lb. (2,812 kg) | GVW |
| = 8,900 lb. (4,036 kg) | Capacity available for towing |
| 900 lb. (408 kg) | Available tongue weight |
| / 8,900 lb. (4,036 kg) | Available capacity |
| = | 10 % tongue weight |

The available towing capacity may be less than the maximum towing capacity due to the passenger and cargo load in the vehicle.

Remember to keep trailer tongue weight between 10 - 15% of the trailer weight or within the trailer tongue load specification recommended by the trailer manufacturer. If the tongue load becomes excessive, rearrange the cargo to obtain the proper tongue load. Do not exceed the maximum tongue weight specification shown in the "Towing load/specification" chart even if the calculated available tongue weight is greater than 15%. If the calculated tongue weight is less than 10% , reduce the total trailer weight to match the available tongue weight.

Always verify that available capacities are within the required ratings.

**Towing load specification chart with tow package — short wheel base**

| | 2WD | | | 4WD | | | | |
|---|---|---|---|---|---|---|---|---|
| | KC | CC | | KC | | CC | | |
| | SV | SV | SL | SV | Pro-4X | SV | Pro-4X | SL |
| Maximum Towing Capacity *1, *2, *3 | 9,500 lb. (4,309 kg) | 9,400 lb. (4,263 kg) | 9,200 lb. (4,173 kg) | 9,400 lb. (4,263 kg) | 9,300 lb. (4,218 kg) | 9,300 lb. (4,218 kg) | 9,300 lb. (4,218 kg) | 9,100 lb. (4,127 kg) |
| Maximum Tongue load *2, *3 | 950 lb. (431 kg) | 940 lb. (426 kg) | 920 lb. (417 kg) | 940 lb. (426 kg) | 930 lb. (422 kg) | 930 lb. (422 kg) | 930 lb. (422 kg) | 910 lb. (413 kg) |
| Maximum King pin load | 1,425 lb. (646 kg) | 1,410 lb. (639 kg) | 1,380 lb. (626 kg) | 1,410 lb. (639 kg) | 1,395 lb. (633 kg) | 1,395 lb. (633 kg) | 1,395 lb. (633 kg) | 1,365 lb. (619 kg) |
| Maximum Gross Combined Weight Rating | 15,100 lb. (6,848 kg) | 15,100 lb. (6,848 kg) | 15,100 lb. (6,848 kg) | 15,100 lb. (6,848 kg) | 15,100 lb. (6,848 kg) | 15,100 lb. (6,848 kg) | 15,100 lb. (6,848 kg) | 15,100 lb. (6,848 kg) |

**Towing load specification chart with tow package — long wheel base**

| | 2WD | 4WD |
|---|---|---|
| | CC | CC |
| | SV | SV |
| Maximum Towing Capacity *1, *2, *3 | 9,300 lb. (4,218 kg) | 9,100 lb. (4,127 kg) |
| Maximum Tongue load *2, *3 | 930 lb. (422 kg) | 910 lb. (413 kg) |
| Maximum King pin load | 1,395 lb. (633 kg) | 1,365 lb. (619 kg) |
| Maximum Gross Combined Weight Rating | 15,100 lb. (6,848 kg) | 15,100 lb. (6,848 kg) |

**Towing load specification chart without tow package — short wheel base**

| | 2WD | | | | | 4WD | | | | |
|---|---|---|---|---|---|---|---|---|---|---|
| | KC | | CC | | | KC | | CC | | |
| | S | SV | S | SV | SL | S | SV | S | SV | SL |
| Maximum Towing capacity*1, *2, *3 | 7,400 lb. (3,356 kg) | 7,400 lb. (3,356 kg) | 7,400 lb. (3,356 kg) | 7,400 lb. (3,356 kg) | 7,100 lb. (3,220 kg) | 7,400 lb. (3,356 kg) | 7,400 lb. (3,356 kg) | 7,300 lb. (3,111 kg) | 7,300 lb. (3,111 kg) | 7,000 lb. (3,175 kg) |
| Maximum Tongue load *2, *3 | 740 lb. (336 kg) | 740 lb. (336 kg) | 740 lb. (336 kg) | 740 lb. (336 kg) | 710 lb. (322 kg) | 740 lb. (336 kg) | 740 lb. (336 kg) | 730 lb. (311 kg) | 730 lb. (311 kg) | 700 lb. (318 kg) |
| Maximum King pin load | 1,110 lb. (504 kg) | 1,110 lb. (504 kg) | 1,110 lb. (504 kg) | 1,110 lb. (504 kg) | 1,065 lb. (483 kg) | 1,110 lb. (504 kg) | 1,110 lb. (504 kg) | 1,095 lb. (496 kg) | 1,095 lb. (496 kg) | 1,050 lb. (476 kg) |
| Maximum Gross Combined Weight Rating | 12,800 lb. (5,806 kg) | 12,800 lb. (5,806 kg) | 12,800 lb. (5,806 kg) | 12,800 lb. (5,806 kg) | 12,800 lb. (5,806 kg) | 13,000 lb. (5,897 kg) | 13,000 lb. (5,897 kg) | 13,000 lb. (5,897 kg) | 13,000 lb. (5,897 kg) | 13,000 lb. (5,897 kg) |

**Towing load specification chart without tow package — long wheel base**

| | 2WD | 4WD |
|---|---|---|
| | CC | CC |
| | SV | SV |
| Maximum Towing capacity*1, *2, *3 | 7,100 lb. (3,220 kg) | 7,000 lb. (3,175 kg) |
| Maximum Tongue load *2, *3 | 710 lb. (322 kg) | 700 lb. (318 kg) |
| Maximum King pin load | 1,065 lb. (483 kg) | 1,050 lb. (476 kg) |
| Maximum Gross Combined Weight Rating | 12,800 lb. (5,806 kg) | 13,000 lb. (5,897 kg) |

*1: The towing capacity values are calculated assuming a base vehicle with driver and any options required to achieve the rating. Additional passengers, cargo and/or optional equipment will add weight to the vehicle and reduce your vehicle's maximum towing capacity.

*2: Use of a weight-distributing hitch system is recommended when towing over 5,000 lbs. (2,268 kg).

*3: The maximum towing capacity when using the genuine NISSAN step bumper as a ball mount is 5,000 lb. (2,268 kg) and 500 lb. (227 kg) tongue load.

## TOWING SAFETY

### Trailer hitch

Your vehicle may be equipped with an optional trailer tow package. The trailer tow package includes a receiver-type frame mounted hitch. This hitch is rated for the maximum towing capacity of this vehicle when the proper towing equipment is used. Choose a proper ball mount and hitch ball that is rated for the trailer to be towed. Genuine NISSAN ball mounts and hitch balls are available from your NISSAN dealer.

If your vehicle is not equipped with the optional trailer tow package, check the towing capacity of your bumper hitch or receiver-type frame mounted hitch. Choose a proper hitch for your vehicle and trailer. A genuine NISSAN trailer hitch is available from your NISSAN dealer. Make sure the trailer hitch is securely attached to the vehicle to help avoid personal injury or property damage due to sway caused by crosswinds, rough road surfaces or passing trucks.

A hitch used for towing 5th wheel and gooseneck trailers can also be installed on your vehicle. Contact a professional supplier of towing equipment to purchase and have a 5th wheel or gooseneck hitch installed.

**⚠WARNING**

**Trailer hitch components have specific weight ratings. Your vehicle may be capable of towing a trailer heavier than the weight rating of the hitch components. Never exceed the weight rating of the hitch components. Doing so can cause serious personal injury or property damage.**

### Hitch ball

Choose a hitch ball of the proper size and weight rating for your trailer:

- The required hitch ball size is stamped on most trailer couplers. Most hitch balls also have the size printed on the top of the ball.
- Choose the proper class hitch ball based on the trailer weight.
- The diameter of the threaded shank of the hitch ball must be matched to the ball mount hole diameter. The hitch ball shank should be no more than 1/16” smaller than the hole in the ball mount.
- The threaded shank of the hitch ball must be long enough to be properly secured to the ball mount. There should be at least 2 threads showing beyond the lock washer and nut.

### Ball mount

The hitch ball is attached to the ball mount and the ball mount is inserted into the hitch receiver. Choose a proper class ball mount based on the trailer weight. Additionally, the ball mount should be chosen to keep the trailer tongue level with the ground.

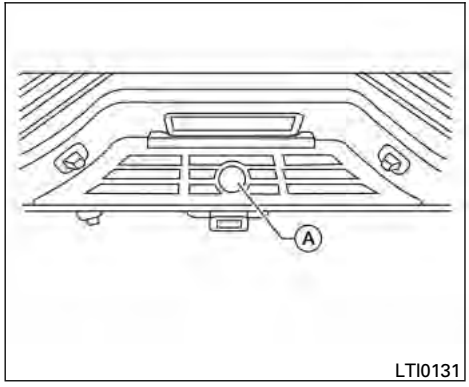


## Bumper towing

The genuine NISSAN step bumper has provisions to install a trailer hitch ball and is designed to tow trailers of a maximum weight of 5,000 lb (2,268 kg).

To install a trailer hitch ball cut out the circle in the center of the step bumper Ⓐ, then remove it to install the trailer hitch ball.

## Weight carrying hitches

A weight carrying or “dead weight” ball mount is one that is designed to carry the whole amount of tongue weight and gross weight directly on the ball mount and on the receiver.

## Weight distribution hitch

This type of hitch is also called a “load-leveling” or “equalizing” hitch. A set of bars attach to the ball mount and to the trailer to distribute the tongue weight (hitch weight) of your trailer. Many vehicles can’t carry the full tongue weight of a given trailer, and need some of the tongue weight transferred through the frame and pushing down on the front wheels. This gives stability to the tow vehicle.

A weight-distributing hitch system (Class IV) is recommended if you plan to tow trailers with a maximum weight over 5,000 lbs (2,268 kg) . Check with the trailer and towing equipment manufacturers to determine if they recommend the use of a weight-distributing hitch system.

**NOTE:**

**A weight-distributing hitch system may affect the operation of trailer surge brakes. If you are considering use of a weight-distributing hitch system with a surge brake-equipped trailer, check with the surge brake, hitch or trailer manufacturer to determine if and how this can be done.**

Follow the instructions provided by the manufacturer for installing and using the weight-distributing hitch system.

General set-up instructions are as follows:

1. Park unloaded vehicle on a level surface. With the ignition on and the doors closed, allow the vehicle to stand for several minutes so that it can level.
2. Measure the height of a reference point on the front and rear bumpers at the center of the vehicle.
3. Attach the trailer to the vehicle and adjust the hitch equalizers so that the front bumper height is within 0 - .5 inches (0 – 13 mm) of the reference height measured in step 2. The rear bumper should be no higher than the reference height measured in step 2.

**⚠ WARNING**

**Properly adjust the weight distributing hitch so the rear of the bumper is no higher than the measured reference height when the trailer is attached. If the rear bumper is higher than the measured reference height when loaded, the vehicle may handle unpredictably which could cause a loss of vehicle control and cause serious personal injury or property damage.**

## Sway control device

Sudden maneuvers, wind gusts, and buffeting caused by other vehicles can affect trailer handling. Sway control devices may be used to help control these affects. If you choose to use one, contact a reputable trailer hitch supplier to make sure the sway control device will work with the vehicle, hitch, trailer and the trailer's brake system. Follow the instructions provided by the manufacturer for installing and using the sway control device.

## Class I hitch

Class I trailer hitch equipment (receiver, ball mount and hitch ball) can be used to tow trailers of a maximum weight of 2,000 lb (907 kg).

## Class II hitch

Class II trailer hitch equipment (receiver, ball mount and hitch ball) can be used to tow trailers of a maximum weight of 3,500 lb (1,587 kg).

## Class III hitch

Class III trailer hitch equipment (receiver, ball mount and hitch ball) can be used to tow trailers of a maximum weight of 5,000 lb (2,268 kg).

## Class IV hitch

Class IV trailer hitch equipment (receiver, ball mount and hitch ball) can be used to tow trailers of a maximum weight of 10,000 lb (4,535 kg). A weight distributing hitch should be used to tow trailers that weigh over 5,000 lb (2,268 kg).

Your vehicle may be equipped with Class IV trailer hitch equipment that has a 10,000 lb (4,535 kg) maximum weight rating, but your vehicle is only capable of towing the maximum trailer weights shown in the "Towing Load/Specification" chart earlier in this section.

## 5th wheel/gooseneck

A 5th wheel or gooseneck trailer can be towed by installing a 5th wheel or gooseneck trailer hitch. These types of hitches are mounted in the bed of the pick-up. A professional trailer equipment supplier should install these hitches as it is very important to mount the hitch correctly to distribute the king pin weight for the proper load carrying and sway control performance.

The king pin weight should be 15 to 25 percent of the fully loaded trailer. Make sure the king pin weight does not cause the gross vehicle weight to exceed the Gross Maximum Weight Rating or the rear axle weight to exceed the Rear Gross Axle Weight rating, see "Maximum load limits" earlier in this section.

The weight of the trailer should not exceed the maximum towing capacity for the vehicle, see "Towing Load/Specification" chart earlier in this section.

Make sure the trailer design allows for the correct vehicle to trailer clearances before purchasing a 5th wheel trailer.

**⚠ CAUTION**

- **Special hitches which include frame reinforcements are required for towing above 2,000 lb (907 kg). Suitable genuine NISSAN hitches, ball mounts and hitch balls for pickup trucks and sport utility vehicles are available at a NISSAN dealer.**
- **The hitch should not be attached to or affect the operation of the impact-absorbing bumper.**
- **Do not use axle-mounted hitches.**
- **Do not modify the vehicle exhaust system, brake system, etc. to install a trailer hitch.**
- **To reduce the possibility of additional damage if your vehicle is struck from the rear, where practical, remove the receiver when not in use.**

- **Regularly check that all trailer hitch mounting bolts are securely mounted.**
- **When towing with the hitch ball mounted to the rear bumper, do not make sharp turns. The trailer may contact the bumper and cause damage to the bumper or trailer.**
- **When towing a 5th wheel trailer, do not make sharp turns while driving or backing. The trailer may contact the vehicle and cause damage to both the trailer and vehicle.**

### Tire pressures

- When towing a trailer, inflate the vehicle tires to the recommended cold tire pressure indicated on the Tire and Loading Information label.
- Trailer tire condition, size, load rating and proper inflation pressure should be in accordance with the trailer and tire manufacturer's specifications.

### Safety chains

Always use suitable safety chains between your vehicle and the trailer. The safety chains should be crossed and should be attached to the hitch, not to the vehicle bumper or axle. The safety chains can be attached to the bumper if the hitch ball is mounted to the bumper. Be sure to leave enough slack in the chains to permit turning corners.

### Trailer lights

**CAUTION**

**When splicing into the vehicle electrical system, a commercially available power-type module/converter must be used to provide power for all trailer lighting. This unit uses the vehicle battery as a direct power source for all trailer lights while using the vehicle tail light, stoplight and turn signal circuits as a signal source. The module/converter must draw no more that 15 milliamps from the stop and tail lamp circuits. Using a module/converter that exceeds these power requirements may damage the vehicle's electrical system. See a reputable trailer dealer to obtain the proper equipment and to have it installed.**

Trailer lights should comply with federal and/or local regulations. For assistance in hooking up trailer lights, contact a NISSAN dealer or reputable trailer dealer. Vehicles equipped with the optional trailer tow package are equipped with a 7-pin trailer harness connector. If your trailer is equipped with a flat 4-pin connector, an adapter will be needed to connect the trailer lights to the vehicle. Adapters are available at NISSAN dealers as well as auto parts stores and hitch retailers.

### Trailer brakes

**When towing a trailer load of 3,500 lbs. (1,587 kg) or more, trailers with a brake system MUST be used.** However, most states require a separate braking system on trailers with a loaded weight above a specific amount. Make sure the trailer meets the local regulations and the regulations where you plan to tow.

Several types of braking systems are available.

**Surge Brakes -** The surge brake actuator is mounted on the trailer tongue with a hydraulic line running to each trailer wheel. Surge brakes are activated by the trailer pushing against the hitch ball when the tow vehicle is braking. Hydraulic surge brakes are common on rental trailers and some boat trailers. In this type of system, there is no hydraulic or electric connection for brake operation between the tow vehicle and the trailer.

**Electric Trailer Brakes -** Electric braking systems are activated by an electronic signal sent from a trailer brake controller (special brake-sensing module). If electric trailer brakes are used, see “Electric trailer brake controller” in this section.

Have a professional supplier of towing equipment make sure the trailer brakes are properly installed and demonstrate proper brake function testing.

**⚠WARNING**

**Never connect a trailer brake system directly to the vehicle brake system.**

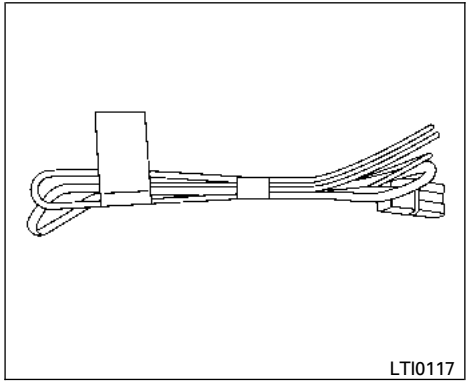


**example**

## Electric trailer brake controller

Trailers equipped with electric brakes may require the installation of an aftermarket trailer brake controller.

Your vehicle is equipped with a connector and jumper harness that is specifically designed to be used when installing an aftermarket brake controller.

To install the electric trailer brake controller jumper harness, perform the following procedure:

1. Open the driver door. Move the seat to the rearmost position.

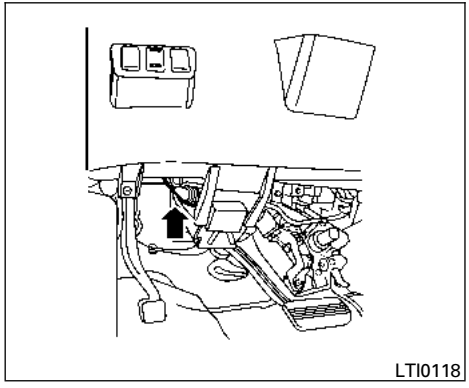


2. Apply the parking brake to access the jumper harness connector.

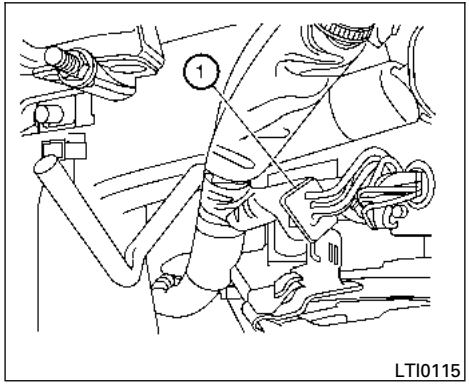


3. Locate the jumper harness connector under the lower portion of the instrument panel. The connector is taped to the wiring harness ① as indicated.

- The connector is marked with a white tag with “elec brake conn”.

Wire color designation for electric trailer brake controller jumper harness.

| WIRE COLOR | NOTE |
|---|---|
| RED/GREEN | Vehicle stop lamp switch to trailer brake controller. |
| BLACK | Brake controller ground (-). |
| BROWN/WHITE | Trailer brake controller switched output. |
| RED/BLUE | Trailer brake controller illumination. |
| RED | Fused trailer brake controller battery feed (B+). |

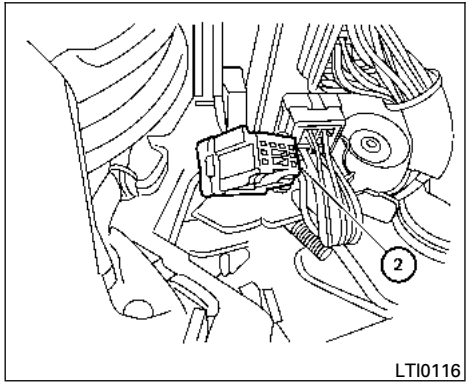


4. Peel off the tape and connect the jumper harness to the connector ②.
5. Release the parking brake.
6. Install the aftermarket electric trailer brake controller according to the manufacturer's instructions.

## Pre-towing tips

- Be certain your vehicle maintains a level position when a loaded and/or unloaded trailer is hitched. Do not drive the vehicle if it has an abnormal nose-up or nose-down condition; check for improper tongue load, overload, worn suspension or other possible causes of either condition.
- Always secure items in the trailer to prevent load shift while driving.
- Keep the cargo load as low as possible in the trailer to keep the trailer center of gravity low.
- Load the trailer so approximately 60% of the trailer load is in the front half and 40% is in the back half. Also make sure the load is balanced side to side.
- Check your hitch, trailer tire pressure, vehicle tire pressure, trailer light operation, and trailer wheel lug nuts every time you attach a trailer to the vehicle.
- Be certain your rearview mirrors conform to all federal, state or local regulations. If not, install any mirrors required for towing before driving the vehicle.
- Determine the overall height of the vehicle and trailer so the required clearance is known.

## Trailer towing tips

In order to gain skill and an understanding of the vehicle's behavior, you should practice turning, stopping and backing up in an area which is free from traffic. Steering stability and braking performance will be somewhat different than under normal driving conditions.

- Always secure items in the trailer to prevent load shift while driving.
- Lock the trailer hitch coupler with a pin or lock to prevent the coupler from inadvertently becoming unlatched.
- Avoid abrupt starts, acceleration or stops.
- Avoid sharp turns or lane changes.
- Always drive your vehicle at a moderate speed.
- When backing up, hold the bottom of the steering wheel with one hand. Move your hand in the direction in which you want the trailer to go. Make small corrections and back up slowly. If possible, have someone guide you when you are backing up.

Always block the wheels on both vehicle and trailer when parking. Parking on a slope is not recommended; however, if you must do so:

**⚠ CAUTION**

**If you move the shift selector to the P (Park) position before blocking the wheels and applying the parking brake, transmission damage could occur.**

1. Apply and hold the brake pedal.
2. Have someone place blocks on the downhill side of the vehicle and trailer wheels.
3. After the wheel blocks are in place, slowly release the brake pedal until the blocks absorb the vehicle load.
4. Apply the parking brake.
5. Shift the transmission into P (Park).
6. Make sure the indicator light (if so equipped) indicates the transfer case is in 4H, 4L, or 2H and that the ATP light is off. If the indicator light is flashing, or the ATP light is ON, make sure the transmission is in P (Park) (A/T) and turn the 4WD switch to 2WD or 4H. See "Automatic transmission park warning light" in the "Instruments and controls" section and "Using four wheel drive (4WD)" in the "Starting and driving" section.
7. Turn off the engine.

To drive away:

1. Start the vehicle.
2. Apply and hold the brake pedal.
3. Shift the transmission into gear.
4. Release the parking brake.
5. Drive slowly until the vehicle and trailer are clear from the blocks.
6. Apply and hold the brake pedal.
7. Have someone retrieve and store the blocks.

- While going downhill, the weight of the trailer pushing on the tow vehicle may decrease overall stability. Therefore, to maintain adequate control, reduce your speed and shift to a lower gear. Avoid long or repeated use of the brakes when descending a hill, as this reduces their effectiveness and could cause overheating. Shifting to a lower gear instead provides "engine braking" and reduces the need to brake as frequently.
- If the engine coolant temperature rises to a high temperature, refer to "If your vehicle overheats" in the "In case of emergency" section of this owner's manual.
- Trailer towing requires more fuel than normal circumstances.
- Avoid towing a trailer for your vehicle's first 500 miles (805 km).
- For the first 500 miles (805 km) that you do tow, do not drive over 50 MPH (80 km/h).
- Have your vehicle serviced more often than at intervals specified in the recommended Maintenance Schedule in the "NISSAN Service and Maintenance Guide".
- When making a turn, your trailer wheels will be closer to the inside of the turn than your vehicle wheels. To compensate for this, make a larger than normal turning radius during the turn.
- Crosswinds and rough roads will adversely affect vehicle/trailer handling, possibly causing vehicle sway. When being passed by larger vehicles, be prepared for possible changes in crosswinds that could affect vehicle handling.

Do the following if the trailer begins to sway:

1. Take your foot off the accelerator pedal to allow the vehicle to coast and steer as straight ahead as the road conditions allow. This combination will help stabilize the vehicle
   - Do not correct trailer sway by steering or applying the brakes.
2. When the trailer sway stops, gently apply the brakes and pull to the side of the road in a safe area.
3. Try to rearrange the trailer load so it is balanced as described earlier in this section.

- Be careful when passing other vehicles. Passing while towing a trailer requires considerably more distance than normal passing. Remember, the length of the trailer must also pass the other vehicle before you can safely change lanes.
- Use the Tow Mode or downshift the transmission to a lower gear for engine braking when driving down steep or long hills. This will help slow the vehicle without applying the brakes.
- Avoid holding the brake pedal down too long or too frequently. This could cause the brakes to overheat, resulting in reduced braking efficiency.
- Increase your following distance to allow for greater stopping distances while towing a trailer. Anticipate stops and brake gradually.
- NISSAN recommends that the cruise control (if so equipped) not be used while towing a trailer.
- Some states or provinces have specific regulations and speed limits for vehicles that are towing trailers. Obey the local speed limits.
- Check your hitch, trailer wiring harness connections, and trailer wheel lug nuts after 50 miles (80 km) of travel and at every break.
- When launching a boat, don't allow the water level to go over the exhaust tail pipe or rear bumper.
- Make sure you disconnect the trailer lights before backing the trailer into the water or the trailer lights may burn out.

**When towing a trailer, final drive gear oil should be replaced and transmission oil/fluid should be changed more frequently. For additional information, see the "Maintenance and do-it-yourself" section earlier in this manual.**

## Tow mode

Using tow mode is recommended when pulling a heavy trailer or hauling a heavy load. Press the TOW MODE switch to activate tow mode. The indicator light on the TOW MODE switch illuminates when tow mode is selected. Press the TOW MODE switch again to turn tow mode off. Tow mode is automatically cancelled when the ignition switch is turned OFF.

Tow mode includes the following features:

- Grade logic — Adjusts transmission shifts when pulling a trailer or hauling a load up a grade.
- Downhill Speed Control (DSC) — automatically downshifts when driving down a grade with a trailer or heavy load to help control vehicle speed.

Driving the vehicle in the tow mode with no trailer/load or light trailer/light load will not cause any damage. However, fuel economy may be reduced and the transmission/engine driving characteristics may feel unusual.

**When towing a trailer, final drive gear oil should be replaced and transmission oil/fluid should be changed more frequently. For additional information, see the "Maintenance and do-it-yourself" section earlier in this manual.**

## FLAT TOWING

Towing your vehicle with all four wheels on the ground is sometimes called flat towing. This method is sometimes used when towing a vehicle behind a recreational vehicle, such as a motor home.

**⚠ CAUTION**

- **Failure to follow these guidelines can result in severe transmission damage.**
- **Whenever flat towing your vehicle, always tow forward, never backward.**
- **DO NOT tow any automatic transmission vehicle with all four wheels on the ground (flat towing). Doing so WILL DAMAGE internal transmission parts due to lack of transmission lubrication.**
- **For emergency towing procedures refer to "Towing recommended by NISSAN" in the "In case of emergency" section of this manual.**

### Automatic Transmission

To tow a vehicle equipped with an automatic transmission, an appropriate vehicle dolly **MUST** be placed under the towed vehicle's drive wheels. **Always** follow the dolly manufacturer's recommendations when using their product.

## SNOW PLOW

**⚠ WARNING**

**Do not use this vehicle for snowplowing. Installing a snowplow may affect vehicle handling. This may cause the driver to lose control of the vehicle and could result in serious vehicle damage or personal injury.**

## UNIFORM TIRE QUALITY GRADING

DOT (Department of Transportation) Quality Grades: All passenger car tires must conform to federal safety requirements in addition to these grades.

Quality grades can be found where applicable on the tire sidewall between tread shoulder and maximum section width. For example:

**Treadwear 200 Traction AA Temperature A**

Treadwear

The treadwear grade is a comparative rating based on the wear rate of the tire when tested under controlled conditions on a specified government test course. For example, a tire graded 150 would wear one and one-half (1 1/2) times as well on the government course as a tire graded 100. The relative performance of tires depends upon the actual conditions of their use, however, and may depart significantly from the norm due to variations in driving habits, service practices and differences in road characteristics and climate.

Traction AA, A, B and C

The traction grades, from highest to lowest, are AA, A, B, and C. Those grades represent the tire's ability to stop on wet pavement as measured under controlled conditions on specified government test surfaces of asphalt and concrete. A tire marked C may have poor traction performance.

**⚠WARNING**

**The traction grade assigned to this tire is based on straight-ahead braking traction tests, and does not include acceleration, cornering, hydroplaning, or peak traction characteristics.**

Temperature A, B and C

The temperature grades are A (the highest), B, and C, representing the tire's resistance to the generation of heat, and its ability to dissipate heat when tested under controlled conditions on a specified indoor laboratory test wheel. Sustained high temperature can cause the material of the tire to degenerate and reduce tire life, and excessive temperature can lead to sudden tire failure. The grade C corresponds to a level of performance which all passenger car tires must meet under the Federal Motor Safety Standard No. 109. Grades B and A represent higher levels of performance on the laboratory test wheel than the minimum required by law.

**⚠WARNING**

**The temperature grade for this tire is established for a tire that is properly inflated and not overloaded. Excessive speed, under-inflation, or excessive loading, either separately or in combination, can cause heat build-up and possible tire failure.**

## EMISSION CONTROL SYSTEM WARRANTY

Your NISSAN vehicle is covered by the following emission warranties:

**For USA**

1. Emission Defects Warranty
2. Emissions Performance Warranty

Details of this warranty may be found with other vehicle warranties in your Warranty Information Booklet which comes with your NISSAN vehicle. If you did not receive a Warranty Information Booklet, or it is lost, you may obtain a replacement by writing to:

- Nissan North America, Inc.
  Consumer Affairs Department
  P.O. Box 685003
  Franklin, TN 37068-5003

**For Canada**

Emission Control System Warranty

Details of this warranty may be found with other vehicle warranties in your Warranty Information Booklet which comes with your NISSAN vehicle. If you did not receive a Warranty Information Booklet, or it is lost, you may obtain a replacement by writing to:

- Nissan Canada Inc.
  5290 Orbitor Drive
  Mississauga, Ontario, L4W 4Z5

## For USA

If you believe that your vehicle has a defect which could cause a crash or could cause injury or death, you should immediately inform the National Highway Traffic Safety Administration (NHTSA) in addition to notifying NISSAN.

If NHTSA receives similar complaints, it may open an investigation, and if it finds that a safety defect exists in a group of vehicles, it may order a recall and remedy campaign. However, NHTSA cannot become involved in individual problems between you, your dealer, or NISSAN.

To contact NHTSA, you may call the Vehicle Safety Hotline toll-free at 1-888-327-4236 (TTY: 1-800-424-9153); go to http://www.safercar.gov; or write to: Administrator, NHTSA, 400 Seventh Street, SW., Washington, D.C. 20590. You can also obtain other information about motor vehicle safety from http://www.safercar.gov.

You may notify NISSAN by contacting our Consumer Affairs Department, toll-free, at 1-800-NISSAN-1.

## For Canada

If you believe that your vehicle has a defect which could cause a crash or could cause injury or death, you should immediately inform Transport Canada in addition to notifying NISSAN.

If Transport Canada receives complaints, it may open an investigation, and if it finds that a safety defect exists in a group of vehicles, it may request that NISSAN conduct a recall campaign. However, Transport Canada cannot become involved in individual problems between you, your dealer, or NISSAN.

You may contact Transport Canada's Defect Investigations and Recalls Division toll free at 1-800-333-0510. You may also report safety defects online at: https://wwwapps.tc.gc.ca/Saf-Sec-Sur/7/PCDB-BDPP/Index.aspx.

Additional information concerning motor vehicle safety may be obtained from Transport Canada's Road Safety Information Centre at 1-800-333-0371 or online at www.tc.gc.ca/roadsafety (English speakers) or www.tc.gc.ca/securiteroutiere (French speakers).

To notify NISSAN of any safety concerns please contact our Consumer Information Centre toll free at 1-800-387-0122.

## READINESS FOR INSPECTION/ MAINTENANCE (I/M) TEST

Due to legal requirements in some states and Canadian Provinces, your vehicle may be required to be in what is called the “ready condition” for an Inspection/Maintenance (I/M) test of the emission control system.

The vehicle is set to the “ready condition” when it is driven through certain driving patterns. Usually, the ready condition can be obtained by ordinary usage of the vehicle.

If a powertrain system component is repaired or the battery is disconnected, the vehicle may be reset to a “not ready” condition. Before taking the I/M test, check the vehicle’s inspection/maintenance test readiness condition. Place the ignition switch in the ON position without starting the engine. If the Malfunction Indicator Light (MIL) comes on steady for 20 seconds and then blinks for 10 seconds , the I/M test condition is “not ready”. If the MIL does not blink after 20 seconds, the I/M test condition is “ready”. Contact a NISSAN dealer to set the “ready condition” or to prepare the vehicle for testing.

## EVENT DATA RECORDERS (EDR)

This vehicle is equipped with an Event Data Recorder (EDR). The main purpose of an EDR is to record, in certain crash or near crash-like situations, such as an air bag deployment or hitting a road obstacle, data that will assist in understanding how a vehicle’s systems performed. The EDR is designed to record data related to vehicle dynamics and safety systems for a short period of time, typically 30 seconds or less. The EDR in this vehicle is designed to record such data as:

- How various systems in your vehicle were operating;
- Whether or not the driver and passenger safety belts were buckled/fastened;
- How far (if at all) the driver was depressing the accelerator and/or brake pedal; and,
- How fast the vehicle was traveling.
- Sounds are not recorded.

These data can help provide a better understanding of the circumstances in which crashes and injuries occur. NOTE: EDR data are recorded by your vehicle only if a nontrivial crash situation occurs; no data are recorded by the EDR under normal driving conditions and no personal data (e.g. name, gender, age and crash location) are recorded. However, other parties, such as law enforcement, could combine the EDR data with the type of personally identifying data routinely acquired during a crash investigation.

To read data recorded by an EDR, special equipment is required and access to the vehicle or the EDR is needed. In addition to the vehicle manufacturer and NISSAN dealer, other parties, such as law enforcement, that have the special equipment, can read the information if they have access to the vehicle or the EDR. EDR data will only be accessed with the consent of the vehicle owner or lessee or as otherwise required or permitted by law.

## OWNER'S MANUAL/SERVICE MANUAL ORDER INFORMATION

Genuine NISSAN Service Manuals for this model year and prior can be purchased. A genuine NISSAN Service Manual is the best source of service and repair information for your vehicle. This manual is the same one used by the factory-trained technicians working at NISSAN dealerships. Genuine NISSAN Owner's Manuals can also be purchased.

**For USA**

For current pricing and availability of genuine **NISSAN Service Manuals**, contact:

1-800-450-9491
www.nissan-techinfo.com

For current pricing and availability of genuine **NISSAN Owner's Manuals**, contact:

1-800-247-5321

**For Canada**

To purchase a copy of a genuine NISSAN Service Manual or Owner's Manual, for this model year and prior, please contact your nearest NISSAN dealer. For the phone number and location of a NISSAN dealer in your area, call the NISSAN Information Center at 1-800-387-0122 and a bilingual NISSAN representative will assist you.

## MEMO

# 10 Index


4WD warning light . . . . . .2-16

## A

Active brake limited slip (ABLS) system . . .5-34
Adjusting pedal position . . . . . .3-14
Air bag (See supplemental restraint system) . . . . . .1-47
Air bag system
  Front (See supplemental front impact air bag system) . . . . . .1-54
Air bag warning labels . . . . . .1-61
Air bag warning light. . . . . .1-62, 2-18
Air cleaner housing filter . . . . . .8-18
Air conditioner
  Air conditioner operation . . . . . .4-20, 4-28
  Air conditioner service . . . . . .4-34
  Air conditioner specification label . . . . .9-12
  Air conditioner system refrigerant and oil recommendations . . . . . .9-7
  Heater and air conditioner controls . . . . . .4-17, 4-25, 4-32
  Servicing air conditioner . . . . . .4-34
Air flow charts . . . . . .4-21, 4-29
Alarm system
(See vehicle security system) . . . . . .2-25
Anchor point locations . . . . . .1-30
Antenna . . . . . .4-72
Anti-lock brake warning light . . . . . .2-13, 2-14
Anti-lock Braking System (ABS). . . . . .5-33
Audible reminders . . . . . .2-20
Audio system . . . . . .4-34
  Bluetooth® audio. . . . . .4-66, 4-68
  Compact disc (CD) player . .4-45, 4-50, 4-56
  FM/AM radio with compact disc (CD) player . . . . . .4-43
  FM/AM/SAT radio with compact disc (CD) player. . . . . .4-48, 4-53
Audio System
  iPod® Player . . . . . .4-62, 4-64
Audio system
  Radio . . . . . .4-34
  USB interface . . . . . .4-59, 4-60
Autolight switch. . . . . .2-31
Automatic
  Automatic drive positioner . . . . . .3-25
  Automatic power window switch . . . . .2-52
  Automatic transmission position indicator light . . . . . .2-24
  Driving with automatic transmission. . . .5-14
  Transmission shift selector lock release. .5-19
Automatic anti-glare inside mirror . . . . . .3-16
Automatic door locks . . . . . .3-6
Automatic transmission fluid temperature gauge . . . . . .2-8
AUX jack . . . . . .4-51, 4-58

## B

Battery. . . . . .8-14
  Charge warning light . . . . . .2-15
Before starting the engine . . . . . .5-11
Belt (See drive belt) . . . . . .8-16
Block heater
  Engine . . . . . .5-39
Bluetooth® audio. . . . . .4-66, 4-68
Bluetooth® hands-free phone system . . . . . .4-83, 4-98, 4-109
Booster seats . . . . . .1-43
Brake
  Anti-lock Braking System (ABS). . . . . .5-33
  Brake fluid. . . . . .8-12
  Brake light (See stop light). . . . . .8-29
  Brake system . . . . . .5-32
  Brake warning light . . . . . .2-14
  Brake wear indicators . . . . . .2-20, 8-21
  Parking brake operation . . . . . .5-20
  Self-adjusting brakes. . . . . .8-21
Brakes . . . . . .8-21
Break-in schedule . . . . . .5-22
Brightness/contrast button. . . . . .4-11
Brightness control
  Instrument panel . . . . . .2-33
Bulb check/instrument panel. . . . . .2-13
Bulb replacement. . . . . .8-29

## C

Capacities and recommended fuel/lubricants. . . . . .9-2
Cargo light switch . . . . . .2-34
Cargo (See vehicle loading information) . . .9-13
Car phone or CB radio. . . . . .4-83
CD care and cleaning . . . . . .4-71
CD player (See audio system). .4-45, 4-50, 4-56

Check tire pressure . . . . . .2-25
Child restraints . . . . . .1-24, 1-25, 1-26, 1-28
Precautions on child restraints. . . . . .1-26, 1-32, 1-36, 1-43
Top tether strap anchor point locations . .1-30
Child safety rear door lock . . . . . .3-7
Chimes, audible reminders . . . . . .2-20
Cleaning exterior and interior. . . . . .7-2
Clock . . . . . .4-44
C.M.V.S.S. certification label . . . . . .9-11
Cold weather driving . . . . . .5-37
Compact disc (CD) player . . . .4-45, 4-50, 4-56
Control panel buttons. . . . . .4-4
Brightness/contrast button . . . . . .4-11
Enter button . . . . . .4-4
Setting button . . . . . .4-7
Controls
Heater and air conditioner controls. . . . . .4-17, 4-25, 4-32
Coolant
Capacities and recommended fuel/lubricants . . . . . .9-2
Changing engine coolant . . . . . .8-8
Checking engine coolant level . . . . . .8-8
Engine coolant temperature gauge . . . . .2-6
Corrosion protection . . . . . .7-5
Cruise control . . . . . .5-21
Cup holders . . . . . .2-47
Curtain side-impact and rollover air bag . . . .1-59

## D

Daytime running light system (Canada only). .2-32
Defroster switch
Rear window and outside mirror defroster switch. . . . . .2-28
Digital video disc DVD. . . . . .4-73
Dimensions and weights . . . . . .9-9
Dimmer switch for instrument panel . . . . . .2-33
Display controls (see control panel buttons) . .4-4
Door locks . . . . . .3-3
Drive belt . . . . . .8-16
Drive positioner, Automatic . . . . . .3-25
Driving
Cold weather driving . . . . . .5-37
Driving with automatic transmission . . . .5-14
Precautions when starting and driving. . . .5-2

## E

Economy - fuel . . . . . .5-23
Electronic locking rear differential (E-Lock) system . . . . . .5-29
Electronic locking rear differential (E-Lock) system switch . . . . . .2-36
Emission control information label . . . . . .9-11
Emission control system warranty . . . . . .9-40
Engine
Before starting the engine. . . . . .5-11
Block heater . . . . . .5-39
Capacities and recommended fuel/lubricants . . . . . .9-2
Changing engine coolant . . . . . .8-8
Changing engine oil . . . . . .8-10
Changing engine oil filter . . . . . .8-11
Checking engine coolant level . . . . . .8-8
Checking engine oil level . . . . . .8-9
Engine compartment check locations . . . .8-6
Engine coolant temperature gauge . . . . .2-6
Engine cooling system . . . . . .8-7
Engine oil . . . . . .8-9
Engine oil and oil filter recommendation . . .9-6
Engine oil viscosity . . . . . .9-7
Engine serial number . . . . . .9-11
Engine specifications . . . . . .9-8
Starting the engine . . . . . .5-12
Engine oil pressure gauge . . . . . .2-7
Engine oil pressure low/engine coolant temperature high warning light . . . . . .2-15
Enter button . . . . . .4-4
Event data recorders . . . . . .9-42
Exhaust gas (Carbon monoxide) . . . . . .5-2
Extended storage switch . . . . . .8-25

## F

Flashers (See hazard warning flasher switch). .6-2
Flat tire . . . . . .6-2
Floor mat positioning aid . . . . . .7-5
Fluid
Brake fluid . . . . . .8-12
Capacities and recommended fuel/lubricants . . . . . .9-2
Engine coolant. . . . . .8-7
Engine oil . . . . . .8-9
Power steering fluid . . . . . .8-12
Windshield-washer fluid. . . . . .8-13
F.M.V.S.S. certification label. . . . . .9-11
Fog light switch . . . . . .2-33
Front air bag system (See supplemental restraint system) . . . . . .1-54
Front seats. . . . . .1-2

Fuel
Capacities and recommended fuel/lubricants . . . . . .9-2
Fuel economy . . . . . .5-23
Fuel-filler door and cap . . . . . .3-12
Fuel gauge . . . . . .2-7
Fuel octane rating . . . . . .9-4
Fuel recommendation . . . . . .9-3
Loose fuel cap warning. . . . . .2-24, 3-12
Fuses . . . . . .8-22
Fusible links . . . . . .8-23

## G

Garage door opener, HomeLink® Universal Transceiver . . . . . .2-58
Gas cap . . . . . .3-12
Gauge
Automatic transmission fluid temperature gauge . . . . . .2-8
Engine coolant temperature gauge . . . . .2-6
Engine oil pressure gauge . . . . . .2-7
Fuel gauge . . . . . .2-7
Odometer . . . . . .2-5
Speedometer . . . . . .2-5
Tachometer . . . . . .2-6
Trip odometer . . . . . .2-5
Voltmeter . . . . . .2-8
General maintenance . . . . . .8-2
Glove box. . . . . .2-45
Glove box lock . . . . . .2-45
Grocery hooks . . . . . .2-50

## H

Hands-free phone system, Bluetooth® . . . . . .4-83, 4-98, 4-109
Hazard warning flasher switch . . . . . .6-2
Headlight and turn signal switch . . . . . .2-30
Headlight control switch . . . . . .2-30
Headlights . . . . . .8-27
Headphones (See NISSAN mobile entertainment system) . . . . . .4-76
Heated seats . . . . . .2-34
Heater
Heater and air conditioner controls . . . . . .4-17, 4-25, 4-32
Heater operation . . . . . .4-19, 4-26, 4-33
HomeLink® Universal Transceiver. . . . . .2-58
Hood release . . . . . .3-11
Horn . . . . . .2-34

## I

Ignition switch . . . . . .5-9
Immobilizer system . . . . . .2-26, 3-2, 5-11
Important vehicle information label . . . . . .9-11
In-cabin microfilter . . . . . .8-18
Increasing fuel economy. . . . . .5-23
Indicator lights and audible reminders (See warning/indicator lights and audible reminders) . . . . . .2-13
Inside automatic anti-glare mirror. . . . . .3-16
Inside mirror . . . . . .3-16
Instrument brightness control . . . . . .2-33
Instrument panel . . . . . .0-6, 2-2
Instrument panel dimmer switch . . . . . .2-33
Interior light. . . . . .2-56
iPod® Player . . . . . .4-62, 4-64
ISOFIX child restraints . . . . . .1-28

## J

Jump starting . . . . . .6-8

## K

Key . . . . . .3-2
Keyfob battery replacement . . . . . .8-26
Keyless entry system (See remote keyless entry system). . . . . .3-7

## L

Labels
Air conditioner specification label . . . . .9-12
C.M.V.S.S. certification label . . . . . .9-11
Emission control information label . . . . .9-11
Engine serial number . . . . . .9-11
F.M.V.S.S. certification label. . . . . .9-11
Tire and Loading Information label . . . . .9-12
Vehicle identification number (VIN) plate. .9-10
Warning labels (for SRS) . . . . . .1-61
LATCH (Lower Anchors and Tethers for CHildren) System . . . . . .1-28
License plate
Installing the license plate . . . . . .9-12
Light
Air bag warning light . . . . . .1-62, 2-18
Brake light (See stop light) . . . . . .8-29

Bulb check/instrument panel . . . . . .2-13
Bulb replacement . . . . . .8-29
Charge warning light . . . . . .2-15
Fog light switch . . . . . .2-33
Headlight and turn signal switch . . . . . .2-30
Headlight control switch . . . . . .2-30
Headlights . . . . . .8-27
Interior light. . . . . .2-56
Light bulbs . . . . . .8-27
Low tire pressure warning light . . . . . .2-16
Low windshield-washer fluid warning light . . . . . .2-24
Passenger air bag and status light . . . . .1-56
Personal lights . . . . . .2-57
Security indicator light. . . . . .2-20
Warning/indicator lights and audible reminders. . . . . .2-13
Lights
Map lights . . . . . .2-58
Lock
Child safety rear door lock . . . . . .3-7
Door locks . . . . . .3-3
Glove box lock . . . . . .2-45
Power door locks . . . . . .3-4
Loose fuel cap warning. . . . . .2-24, 3-12
Low fuel warning light . . . . . .2-16, 2-18, 2-24
Low tire pressure warning light . . . . . .2-16
Low windshield-washer fluid warning light. . .2-24
Luggage (See vehicle loading information) . .9-13

## M

Maintenance
General maintenance . . . . . .8-2
Inside the vehicle . . . . . .8-3
Maintenance precautions . . . . . .8-5
Outside the vehicle . . . . . .8-2
Seat belt maintenance. . . . . .1-23
Under the hood and vehicle . . . . . .8-4
Malfunction indicator light. . . . . .2-19
Manual front seat adjustment . . . . . .1-2, 1-3
Manual windows . . . . . .2-53
Map lights . . . . . .2-58
Map pocket. . . . . .2-46
Meters and gauges . . . . . .2-4
Instrument brightness control . . . . . .2-33
Mirror
Automatic anti-glare inside mirror. . . . . .3-16
Inside mirror . . . . . .3-16
Outside mirrors . . . . . .3-18
Vanity mirror . . . . . .3-15
Moonroof . . . . . .2-54

## N

NISSAN mobile entertainment system (MES). . . . . .4-73
NISSAN vehicle immobilizer system . . . . . .2-26, 3-2, 5-11
NISSAN voice recognition system . . . . . .4-119

## O

Octane rating (See fuel octane rating). . . . . .9-4
Odometer . . . . . .2-5
Oil
Capacities and recommended fuel/lubricants . . . . . .9-2
Changing engine oil . . . . . .8-10
Changing engine oil filter . . . . . .8-11
Checking engine oil level . . . . . .8-9
Engine oil . . . . . .8-9
Engine oil and oil filter recommendation . . .9-6
Engine oil pressure low/engine coolant temperature high warning light . . . . . .2-15
Engine oil viscosity . . . . . .9-7
Outside mirrors . . . . . .3-18
Overheat
If your vehicle overheats. . . . . .6-10
Owner's manual order form . . . . . .9-43
Owner's manual/service manual order information . . . . . .9-43

## P

Parking
Parking brake operation . . . . . .5-20
Parking/parking on hills . . . . . .5-31
Pedal position adjustment. . . . . .3-14
Personal lights . . . . . .2-57
Phone, Bluetooth® hands-free system. . . . . .4-83, 4-98, 4-109
Power
Front seat adjustment . . . . . .1-4
Power door locks . . . . . .3-4
Power outlet. . . . . .2-39, 2-40
Power rear windows . . . . . .2-52
Power steering fluid . . . . . .8-12
Power steering system . . . . . .5-32
Power windows . . . . . .2-51
Rear power windows . . . . . .2-52
Power inverter switch . . . . . .2-37
Precautions
Maintenance precautions . . . . . .8-5

On-pavement and off-road driving precautions . . . . . .5-3
Precautions on child restraints. . . . . .1-26, 1-32, 1-36, 1-43
Precautions on seat belt usage . . . . . .1-15
Precautions on supplemental restraint system . . . . . .1-47
Precautions when starting and driving . . . .5-2
Pre-tensioner seat belt system . . . . . .1-60
Programmable features . . . . . .4-7
Push starting . . . . . .6-10

## R

Radio
Car phone or CB radio . . . . . .4-83
FM/AM radio with compact disc (CD) player . . . . . .4-43
FM/AM/SAT radio with compact disc (CD) player . . . . . .4-48, 4-53
Readiness for inspection maintenance (I/M) test . . . . . .9-42
Rear power windows . . . . . .2-52
Rear sliding window . . . . . .2-53
Rear sonar system . . . . . .5-36
Rear sonar system off switch . . . . . .2-38
RearView Monitor . . . . . .4-11
Rear window and outside mirror defroster switch. . . . . .2-28
Recorders
Event data . . . . . .9-42
Refrigerant recommendation . . . . . .9-7
Registering your vehicle in another country . .9-10
Remote controller (See NISSAN mobile entertainment system) . . . . . .4-75
Remote keyless entry system. . . . . .3-7
Reporting safety defects (US only) . . . . . .9-41

## S

Safety
Child safety rear door lock . . . . . .3-7
Child seat belts . . . . .1-26, 1-32, 1-36, 1-43
Reporting safety defects (US only) . . . . .9-41
Screen (See NISSAN mobile entertainment system) . . . . . .4-75
Seat adjustment
Front manual seat adjustment. . . . . .1-2, 1-3
Front power seat adjustment . . . . . .1-4
Seatback pockets . . . . . .2-46
Seat belt
Child safety. . . . . .1-24
Infants and small children . . . . . .1-25
Injured Person . . . . . .1-18
Larger children . . . . . .1-25
Precautions on seat belt usage . . . . . .1-15
Pregnant women. . . . . .1-18
Pre-tensioner seat belt system . . . . . .1-60
Seat belt extenders . . . . . .1-23
Seat belt maintenance. . . . . .1-23
Seat belts. . . . . .1-15
Shoulder belt height adjustment . . . . . .1-21
Three-point type with retractor . . . . . .1-18
Two-point type without retractor (rear center lap belt) . . . . . .1-21
Seat belt warning light. . . . . .2-18
Seats
Adjustment. . . . . .1-2
Automatic drive positioner. . . . . .3-25
Front seats . . . . . .1-2
Heated seats . . . . . .2-34
Manual front seat adjustment . . . . . .1-2, 1-3
Security indicator light. . . . . .2-20
Security system (NISSAN vehicle immobilizer system), engine start . . . . . .2-26, 3-2, 5-11
Self-adjusting brakes . . . . . .8-21
Service manual order form . . . . . .9-43
Servicing air conditioner. . . . . .4-34
Setting button . . . . . .4-7
Shifting
Automatic transmission. . . . . .5-15, 5-16
Shift lock release. . . . . .5-19
Shoulder belt height adjustment . . . . . .1-21
Side air bag system (See supplemental side air bag, curtain and rollover air bag systems) . . .1-59
Sonar
Rear system . . . . . .5-36
Spark plug replacement . . . . . .8-17
Speedometer . . . . . .2-5
SRS warning label . . . . . .1-61
Starting
Before starting the engine. . . . . .5-11
Jump starting . . . . . .6-8
Precautions when starting and driving . . . .5-2
Push starting . . . . . .6-10
Starting the engine . . . . . .5-12
Steering
Power steering fluid . . . . . .8-12
Power steering system . . . . . .5-32
Tilting steering wheel . . . . . .3-14
Stop light . . . . . .8-29
Storage . . . . . .2-42
Lockable bedside storage compartment . .2-50
Overhead storage compartment . . . . . .2-46
Storage bin. . . . . .2-47
Storage tray . . . . . .2-42

Sunglasses case . . . . . .2-45
Sunroof . . . . . .2-54
Sunroof (see Moonroof) . . . . . .2-54
Sun visors . . . . . .3-15
Supplemental air bag warning labels . . . . . .1-61
Supplemental air bag warning light . . .1-62, 2-18
Supplemental front impact air bag system . . .1-54
Supplemental restraint system
Information and warning labels . . . . . .1-61
Precautions on supplemental restraint system . . . . . .1-47
Supplemental restraint system (Supplemental air bag system) . . . . . .1-47
Switch
Autolight switch . . . . . .2-31
Automatic power window switch . . . . . .2-52
Electronic locking rear differential (E-Lock) system switch . . . . . .2-36
Fog light switch . . . . . .2-33
Hazard warning flasher switch . . . . . .6-2
Headlight and turn signal switch . . . . . .2-30
Headlight control switch . . . . . .2-30
Ignition switch . . . . . .5-9
Power door lock switch . . . . . .3-4
Power inverter switch . . . . . .2-37
Rear sonar system off switch . . . . . .2-38
Rear window and outside mirror defroster switch . . . . . .2-28
Turn signal switch . . . . . .2-33
Vehicle dynamic control (VDC) off switch . . . . . .2-36
Windshield wiper and washer switch . . .2-27

## T

Tachometer . . . . . .2-6
Tailgate latch . . . . . .3-21
Temperature gauge
Engine coolant temperature gauge . . . . .2-6
Engine oil pressure low/engine coolant temperature high warning light . . . . . .2-15
Theft (NISSAN vehicle immobilizer system), engine start . . . . . .2-26, 3-2, 5-11
Three-way catalyst . . . . . .5-2
Tie down hooks . . . . . .3-25
Tilting steering wheel . . . . . .3-14
Tire
Flat tire . . . . . .6-2
Spare tire . . . . . .6-4
Tire and Loading Information label . . . . .9-12
Tire chains . . . . . .8-40
Tire placard . . . . . .9-12
Tire pressure . . . . . .8-33
Tire rotation . . . . . .8-40
Tires of 4-wheel drive . . . . . .8-42
Types of tires . . . . . .8-39
Uniform tire quality grading . . . . . .9-39
Wheels and tires . . . . . .8-33
Wheel/tire size . . . . . .9-9
Tire pressure
Low tire pressure warning light . . . . . .2-16
Tire Pressure Monitoring System (TPMS) . . . .5-3
Towing
2-wheel drive models . . . . . .6-12
4-wheel drive models . . . . . .6-13
Flat towing . . . . . .9-39
Towing load/specification . . . . . .9-28
Tow truck towing . . . . . .6-11
Trailer towing . . . . . .9-24
Tow mode switch . . . . . .2-38
Transceiver
HomeLink® Universal Transceiver . . . . . .2-58
Transmission
Driving with automatic transmission . . . .5-14
Shift selector lock release . . . . . .5-19
Travel (See registering your vehicle in another country) . . . . . .9-10
Trip odometer . . . . . .2-5
Truck - camper loading . . . . . .9-22
Turn signal switch . . . . . .2-33

## U

Uniform tire quality grading . . . . . .9-39
USB interface
Audio file operation . . . . . .4-59, 4-61

## V

Vanity mirror . . . . . .3-15
Variable voltage control system . . . . . .8-16
Vehicle dimensions and weights . . . . . .9-9
Vehicle dynamic control (VDC) off switch . . .2-36
Vehicle dynamic control (VDC) system . . . .5-35
Vehicle identification . . . . . .9-10
Vehicle identification number (VIN) (Chassis number) . . . . . .9-10
Vehicle identification number (VIN) plate . . .9-10
Vehicle loading information . . . . . .9-13
Vehicle recovery . . . . . .6-13
Vehicle security system . . . . . .2-25

Vehicle security system (NISSAN vehicle immobilizer system), engine start. .2-26, 3-2, 5-11
Ventilators . . . . . .4-17
Visors . . . . . .3-15
Voice recognition system . . . . . .4-119
Voltmeter . . . . . .2-8

## W

Warning
- 4WD warning light . . . . . .2-16
- Air bag warning light . . . . . .1-62, 2-18
- Anti-lock brake warning light . . . . .2-13, 2-14
- Battery charge warning light . . . . . .2-15
- Brake warning light . . . . . .2-14
- Engine oil pressure low/engine coolant temperature high warning light . . . . . .2-15
- Hazard warning flasher switch . . . . . .6-2
- Low fuel warning light . . . . .2-16, 2-18, 2-24
- Low tire pressure warning light . . . . . .2-16
- Low windshield-washer fluid warning light . . . . . .2-24
- Passenger air bag and status light . . . . .1-56
- Seat belt warning light. . . . . .2-18
- Vehicle security system . . . . . .2-25
- Warning/indicator lights and audible reminders. . . . . .2-13
- Warning labels (for SRS) . . . . . .1-61

Warning lights . . . . . .2-13
Washer switch
- Windshield wiper and washer switch . . .2-27

Weights (See dimensions and weights) . . . . .9-9
Wheels and tires. . . . . .8-33
Wheel/tire size. . . . . .9-9
When traveling or registering your vehicle in another country . . . . . .9-10
Windows
- Locking passengers' windows . . . . . .2-52
- Manual windows . . . . . .2-53
- Power rear windows . . . . . .2-52
- Power windows . . . . . .2-51
- Rear power windows . . . . . .2-52
- Rear sliding window . . . . . .2-53

Windshield-washer fluid. . . . . .8-13
Windshield wiper and washer switch . . . . .2-27
Wiper
- Windshield wiper and washer switch . . .2-27
- Wiper blades. . . . . .8-20

**MEMO**

**MEMO**

**MEMO**

## RECOMMENDED FUEL (without Flexible Fuel Vehicle [FFV] option):

Use unleaded regular gasoline with an octane rating of at least 87 AKI (Anti-Knock Index) number (Research octane number 91).

**⚠ CAUTION**

- **Only vehicles with the E-85 filler door label can operate on E-85. Fuel system or other damage can occur if E-85 is used in vehicles that are not designed to run on E-85.**
- **Using a fuel other than that specified could adversely affect the emission control system, and may also affect the warranty coverage.**
- **Under no circumstances should a leaded gasoline be used, because this will damage the three-way catalyst.**
- **Do not use E-15 or E-85 fuel in your vehicle. Your vehicle is not designed to run on E-15 or E-85 fuel. Using E-15 or E-85 fuel in a vehicle not specifically designed for E-15 or E-85 fuel can adversely affect the emission control devices and systems of the vehicle. Damage caused by such fuel is not covered by the NISSAN new vehicle limited warranty.**
- **U.S. government regulations require ethanol dispensing pumps to be identified by a small, square, orange and black label with the common abbreviation or the appropriate percentage for that region.**

For additional information, see “Capacities and recommended fuel/lubricants” in the “Technical and consumer information” section.

## FLEXIBLE FUEL VEHICLE (FFV) FUEL RECOMMENDATION (if so equipped):

If your vehicle is equipped as a Flexible Fuel vehicle (FFV) your vehicle is designed to use (E-85) Fuel Ethanol, “Regular” unleaded regular gasoline or any percentage of the two fuels combined.

**⚠ CAUTION**

- **Using a fuel other than that specified could adversely affect the emission control system, and may also affect the warranty coverage.**
- **Under no circumstances should a leaded gasoline be used, because this will damage the three-way catalyst.**

For additional information, see “Capacities and recommended fuel/lubricants in the “Technical and consumer information” section of this manual.

## RECOMMENDED ENGINE OIL:

- Engine oil with API Certification Mark
- Viscosity SAE 5W-30

See “Engine oil and oil filter recommendations” in the “Technical and consumer information” section of this manual.

## COLD TIRE PRESSURE:

See Tire and Loading Information label.

The label is typically located on the driver side center pillar or on the driver’s door. For additional information, see “Wheels and tires” in the “Maintenance and do-it-yourself” section of this manual.

## RECOMMENDED NEW VEHICLE BREAK-IN PROCEDURE:

During the first 1,200 mi (2,000 km) of vehicle use, follow the recommendations outlined in the “Break-in schedule” information found in the “Starting and driving” section of this manual. Follow these recommendations for the future reliability and economy of your new vehicle. Failure to follow these recommendations may result in vehicle damage or shortened engine life.

Printing : July 2012 (18)
Publication No.: OM3E 0A60U0
Printed in U.S.A.

A60-D