FUEL SYSTEM

PRECAUTION

1. PRECAUTIONS

(a) Before working on the fuel system, disconnect the cable from the negative battery terminal.

(b) Do not work on the fuel system near any naked flames. Never smoke during the work.

(c) Keep rubber and leather parts away from gasoline.

2. DISCHARGE FUEL SYSTEM PRESSURE

CAUTION:

- **Before removing any fuel system parts, take precautions to prevent gasoline spillage.**
- **As some pressure remains in the fuel line even after taking precautions to prevent gasoline spillage, use a shop rag or piece of cloth to prevent gasoline splashes when disconnecting the fuel line.**

(a) Remove the rear seat cushion (for Hatchback) (See page SE-114).

(b) Remove the rear seat assembly (for Hatchback) (See page SE-70).

(c) Remove the rear seat cushion (for Sedan) (See page SE-46).

(d) Remove the rear floor service hole cover.

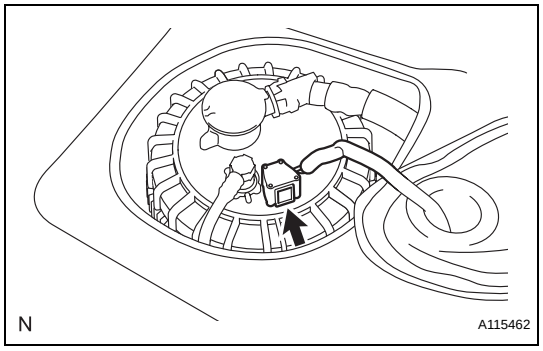

(e) Disconnect the connector from the fuel pump assembly.

(f) Start the engine. After the engine stops naturally, turn the ignition switch OFF.
HINT:
DTC P0171 may be set.

(g) Crank the engine again and make sure that the engine does not start.

(h) Remove the fuel tank cap and discharge the pressure.

(i) Disconnect the cable from the negative battery terminal.

(j) Connect the connector of the fuel pump assembly.

3. FUEL SYSTEM

(a) When disconnecting the high-pressure fuel line, a large amount of gasoline will splash. So take the following precautions.

(1) Discharge the fuel system pressure.

(2) Disconnect the fuel tube.

FU

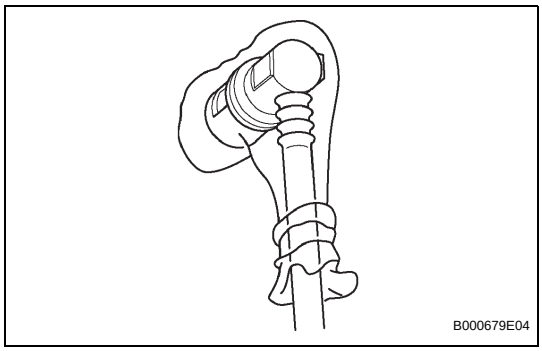

(3) Drain the fuel remaining inside the fuel pump tube.
(4) Cover the disconnected fuel tube connector and pipe with a vinyl bag to prevent damage and the intrusion of foreign matter.

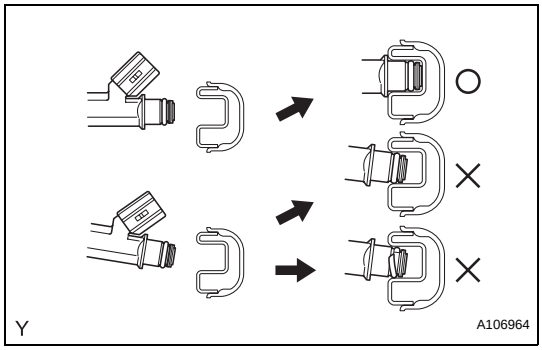

(b) Observe the following precautions when removing and installing the fuel injector.
(1) Do not reuse the O-ring.
(2) When placing a new O-ring onto the injector, do not damage the O-ring.
(3) Coat the new O-ring with grease or gasoline before installing it. Do not use engine, gear or brake oil.

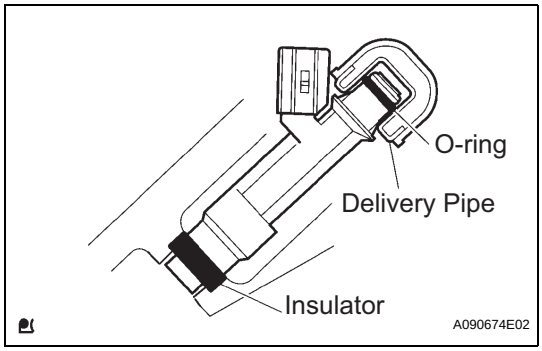

(c) Install the injector into the delivery pipe and cylinder head, as shown in the illustration. Apply grease or gasoline oil to the contact surfaces of the delivery pipe and injector before installing the injector.

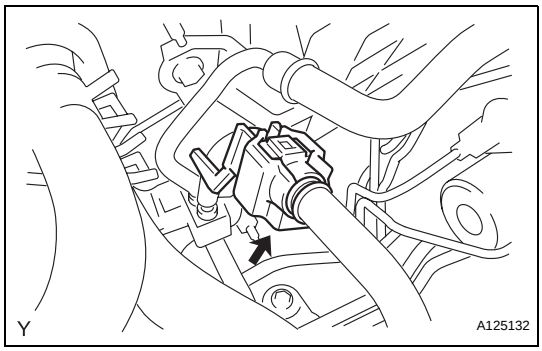

(d) Observe these precautions when disconnecting the fuel tube connector.
(1) Remove the fuel pipe clamp No.1.
(2) Check whether there is any dirt in the pipe around the connector before disconnecting it and remove the dirt as necessary.

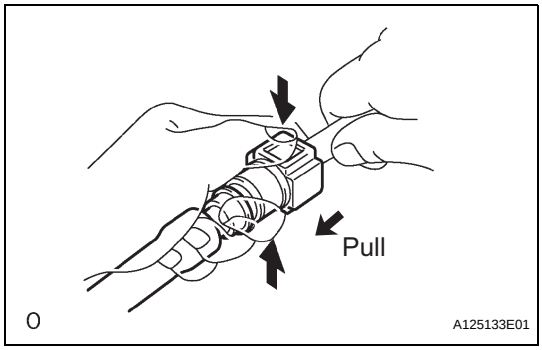

(3) If the connector and pipe are stuck, pinch the retainer with your hand, then push and pull the connector to disconnect them. Do not use any tools.
(4) Check the sealing surface of the pipe for dirt and mud. If dirty, wipe it with a shop rag or piece of cloth.

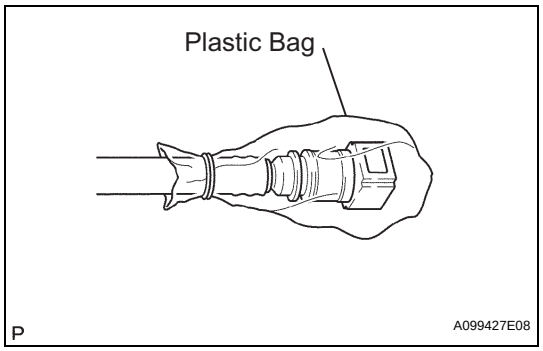

(5) Cover the disconnected fuel tube connector and pipe with a vinyl bag to prevent damage and the intrusion of foreign matter.

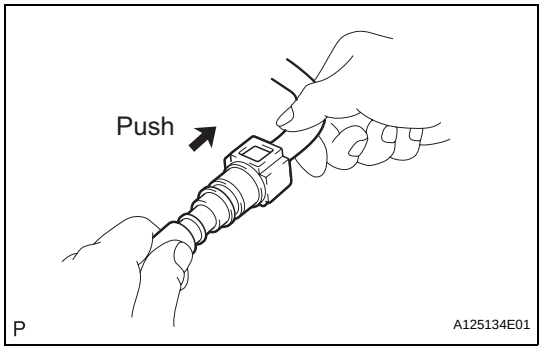

(e) Observe the following precautions when connecting the fuel tube connector.
(1) Check that there is no damage or foreign matter on the part of the pipe that comes into contact with the connector.
(2) Align the axis of the connector with the axis of the pipe. Push the pipe into the connector until the connector makes a click sound. If the connection is too tight, apply a small amount of fresh engine oil to the tip of the pipe.

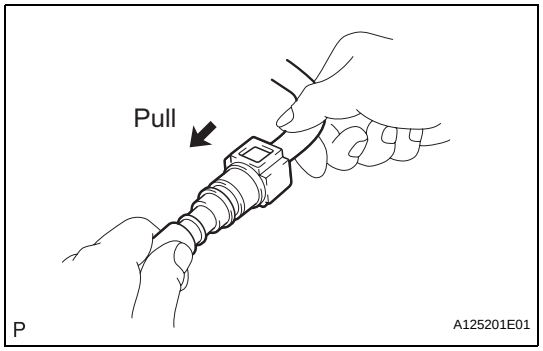

(3) After connecting the pipe and connector, try to pull them apart to confirm that they are securely connected.
(4) Attach the lock claws to the connector by pushing down on the cover.

4. CHECK FOR FUEL LEAKAGE

(a) Check that there is no fuel leakage after performing maintenance anywhere on the fuel system (See pageFU-7).

FU

PARTS LOCATION

for Hatchback:

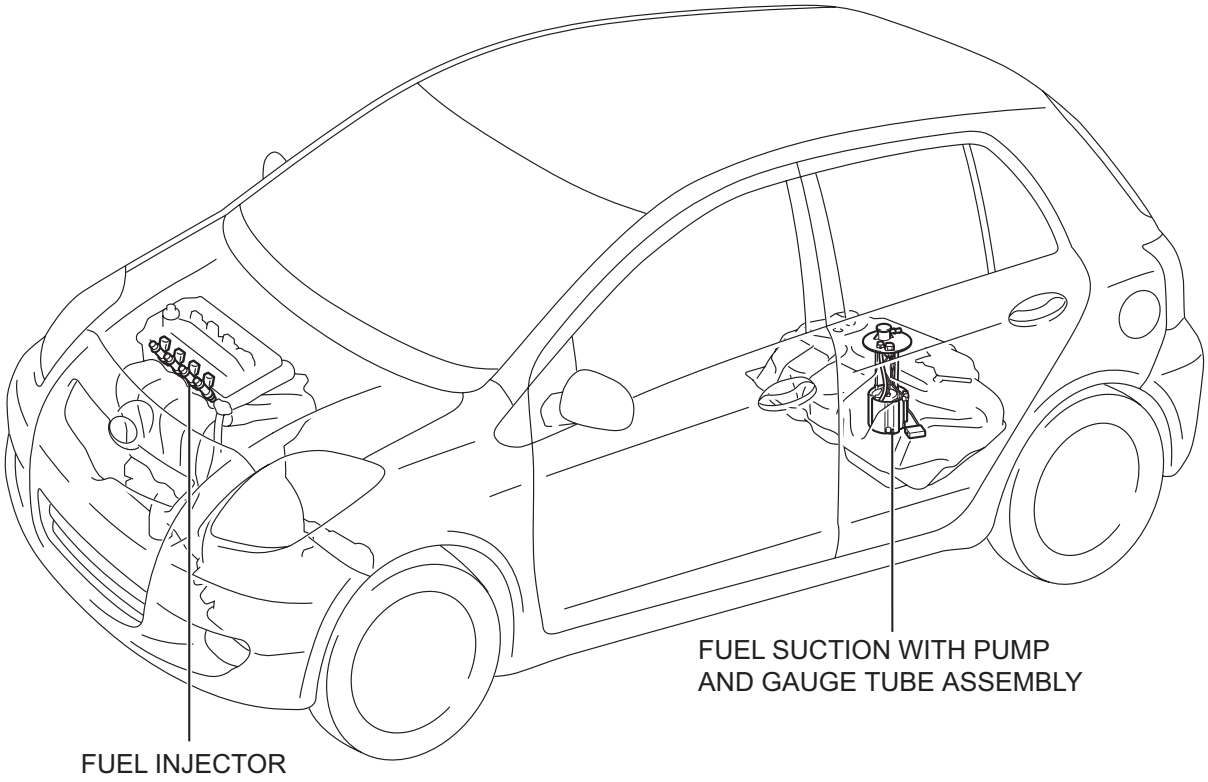

N

A119137E02

for Sedan:

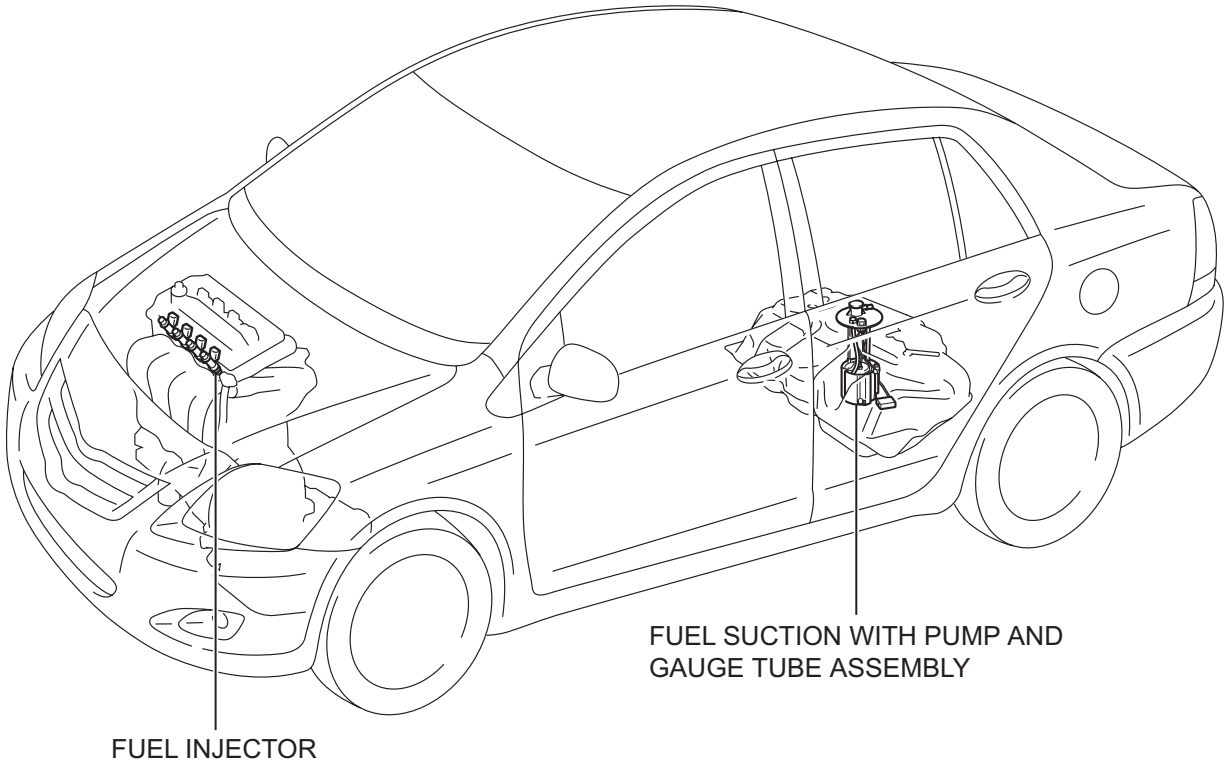

N

A133330E01

SYSTEM DIAGRAM

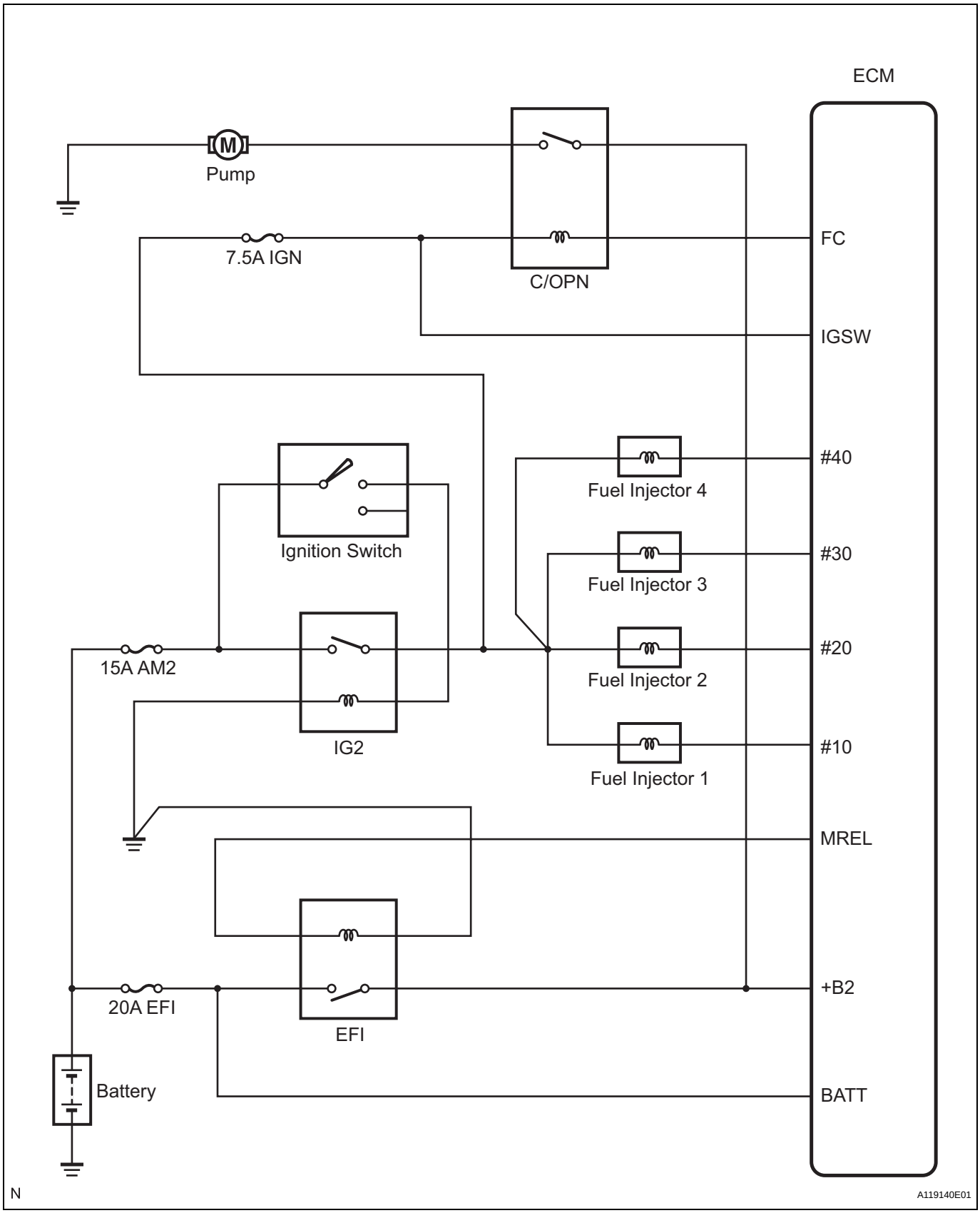

ON-VEHICLE INSPECTION

1. CHECK FUEL PUMP OPERATION AND FUEL LEAKAGE

(a) When using the intelligent tester.

(1) Connect the intelligent tester to the DLC3.

(2) Turn the ignition switch on (IG) and the intelligent tester main switch on.

NOTICE:

Do not start the engine.

(3) Select the Active Test mode on the intelligent tester.

HINT:

Refer to the intelligent tester operator's manual for further details.

(b) Check that there is no fuel leakage anywhere on the fuel system after doing maintenance.

2. CHECK FUEL PRESSURE

(a) Discharge the fuel system pressure (See page FU-1).

(b) Using a voltmeter, measure the battery voltage.

Standard voltage:

11 to 14 V

(c) Disconnect the negative (-) battery terminal cable.

(d) Remove fuel pipe clamp No. 1 from the fuel tube connector.

(e) Disconnect the fuel hose from the fuel main tube.

(f) Install SST (pressure gauge and fuel tube connector) as shown in the illustration.

SST 09268-45014 (09268-41200, 09268-41220, 09268-41250), 09268-41047 (90467-13001, 95336-08070, 09268-41500)

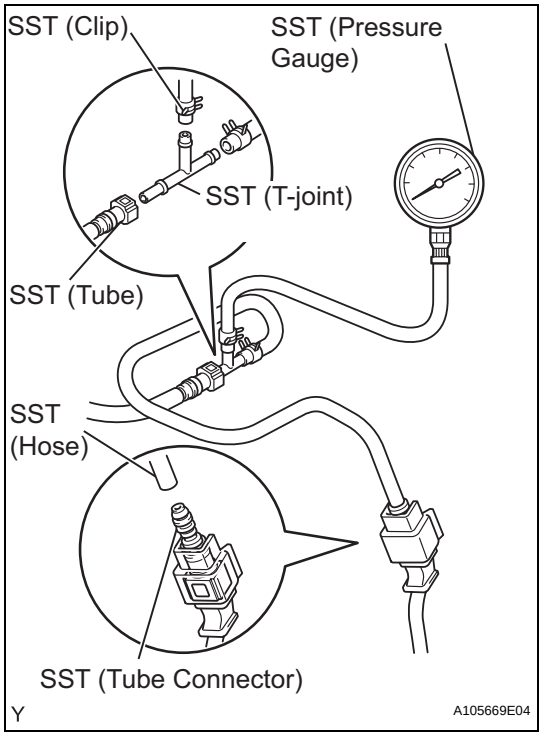

(g) Wipe off any spilt gasoline.

(h) Reconnect the negative (-) battery terminal cable.

(i) Connect the intelligent tester to the DLC3 (see step 1 in check fuel pump operation).

(j) Measure the fuel pressure.

Fuel pressure:

304 to 343 kPa (3.1 to 3.5 kgf*cm^2, 44.1 to 49.7 psi)

If the pressure is high, replace the fuel pressure regulator.

If the pressure is low, check the fuel hoses, fuel hose connections, fuel pump and fuel pressure regulator.

(k) Disconnect the intelligent tester from the DLC3.

(l) Start the engine.

(m) Measure the fuel pressure while the engine is idling.

Fuel pressure:

304 to 343 kPa (3.1 to 3.5 kgf*cm^2, 44.1 to 49.7 psi)

If the pressure is not as specified, check the vacuum sensing hose and the fuel pressure regulator.

FU

(n) Stop the engine.

(o) Check that the fuel pressure remains as specified for 5 minutes after the engine stops.

Fuel pressure:

147 kPa (1.5 kgf*cm^2, 21 psi) or more

If the pressure is not as specified, check the fuel pump, pressure regulator and injectors.

(p) After checking the fuel pressure, disconnect the negative (-) battery terminal cable and carefully remove SST to prevent gasoline splashes.

(q) Reconnect the fuel tube to the fuel main tube.

(r) Install fuel pipe clamp No. 1 onto the fuel tube connector.

(s) Check for fuel leakage (step 1).

FUEL INJECTOR

COMPONENTS

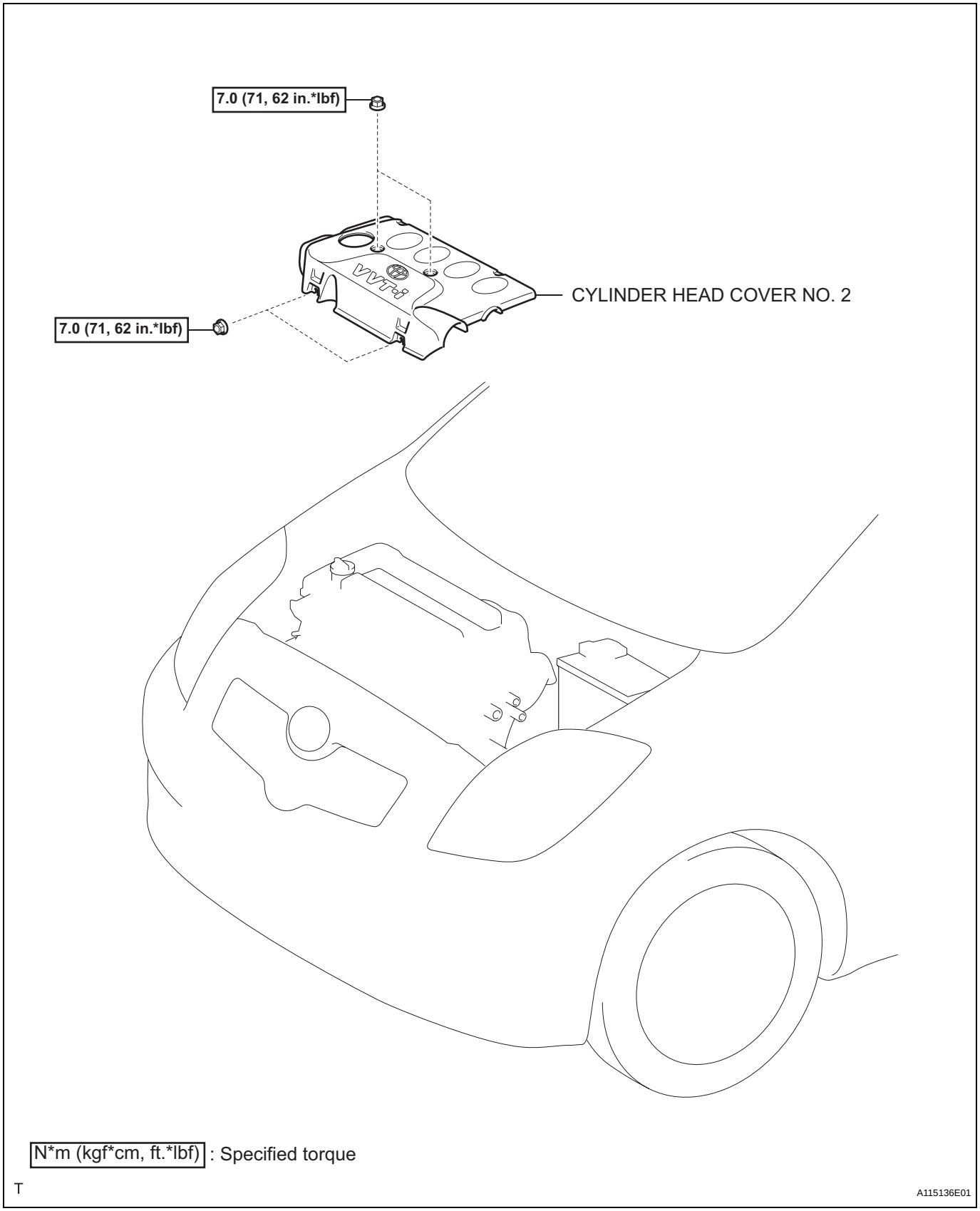

FU

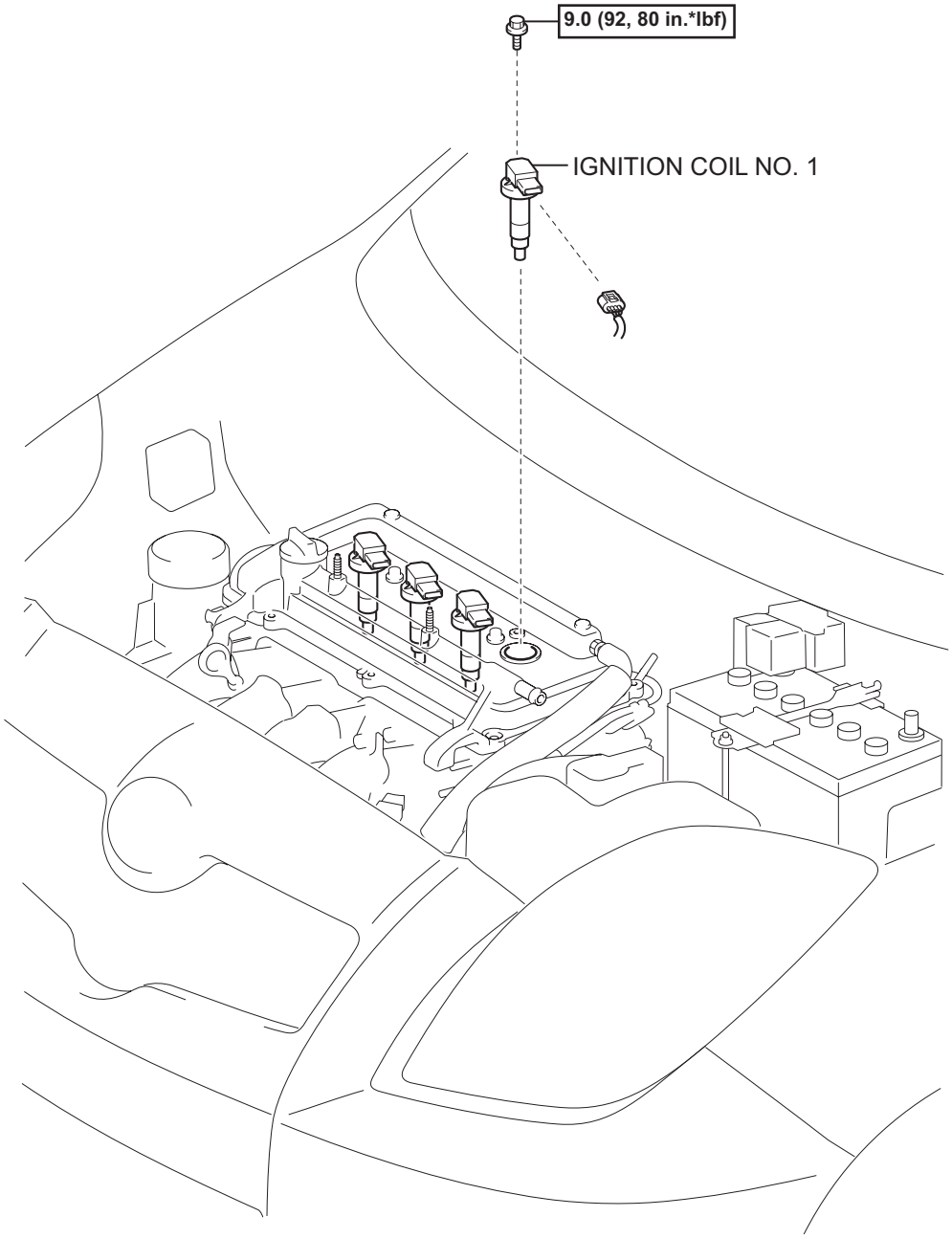

N*m (kgf*cm, ft.*lbf) : Specified torque

T

A115486E01

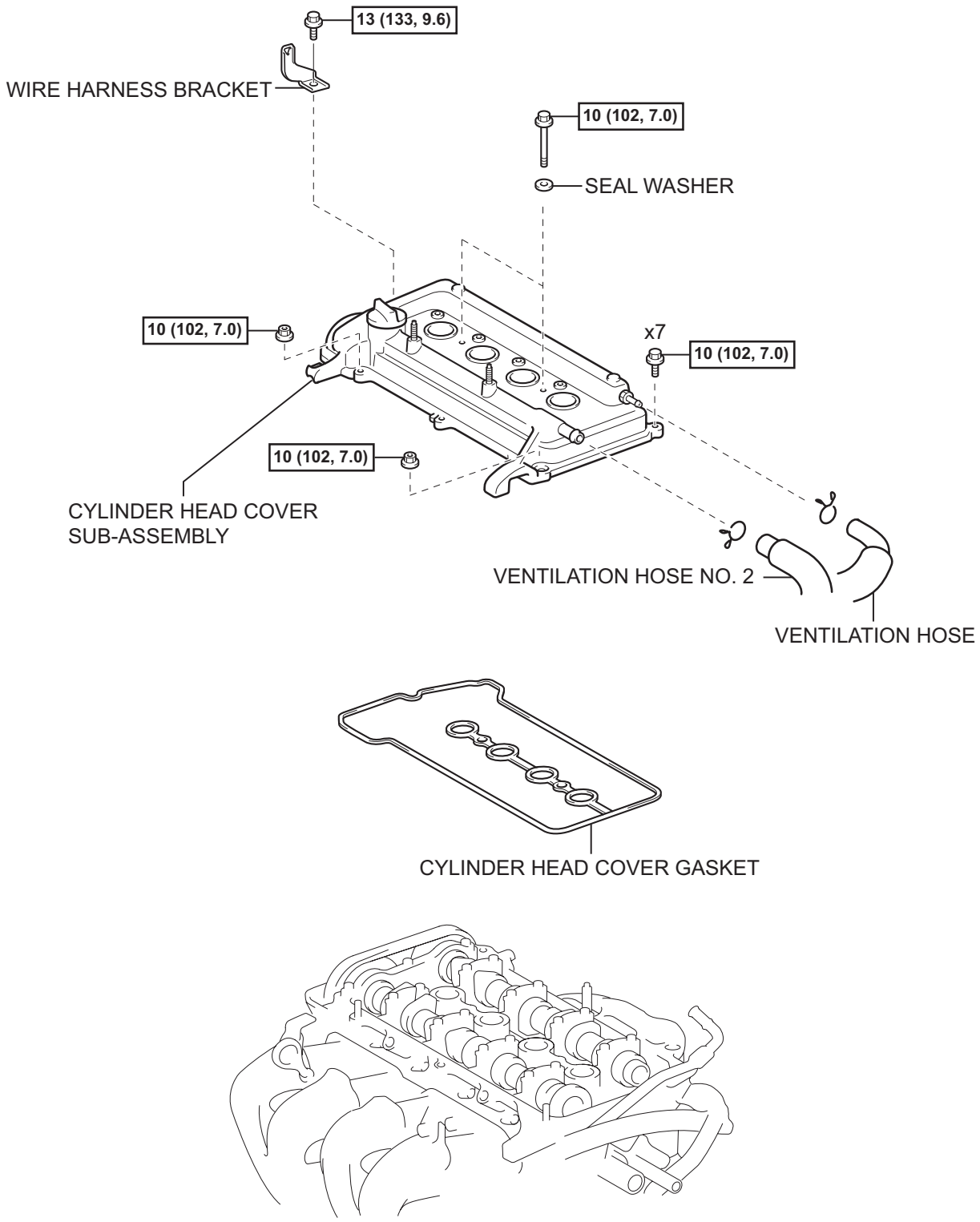

N*m (kgf*cm, ft.*lbf) : Specified torque

T

A115504E01

FU

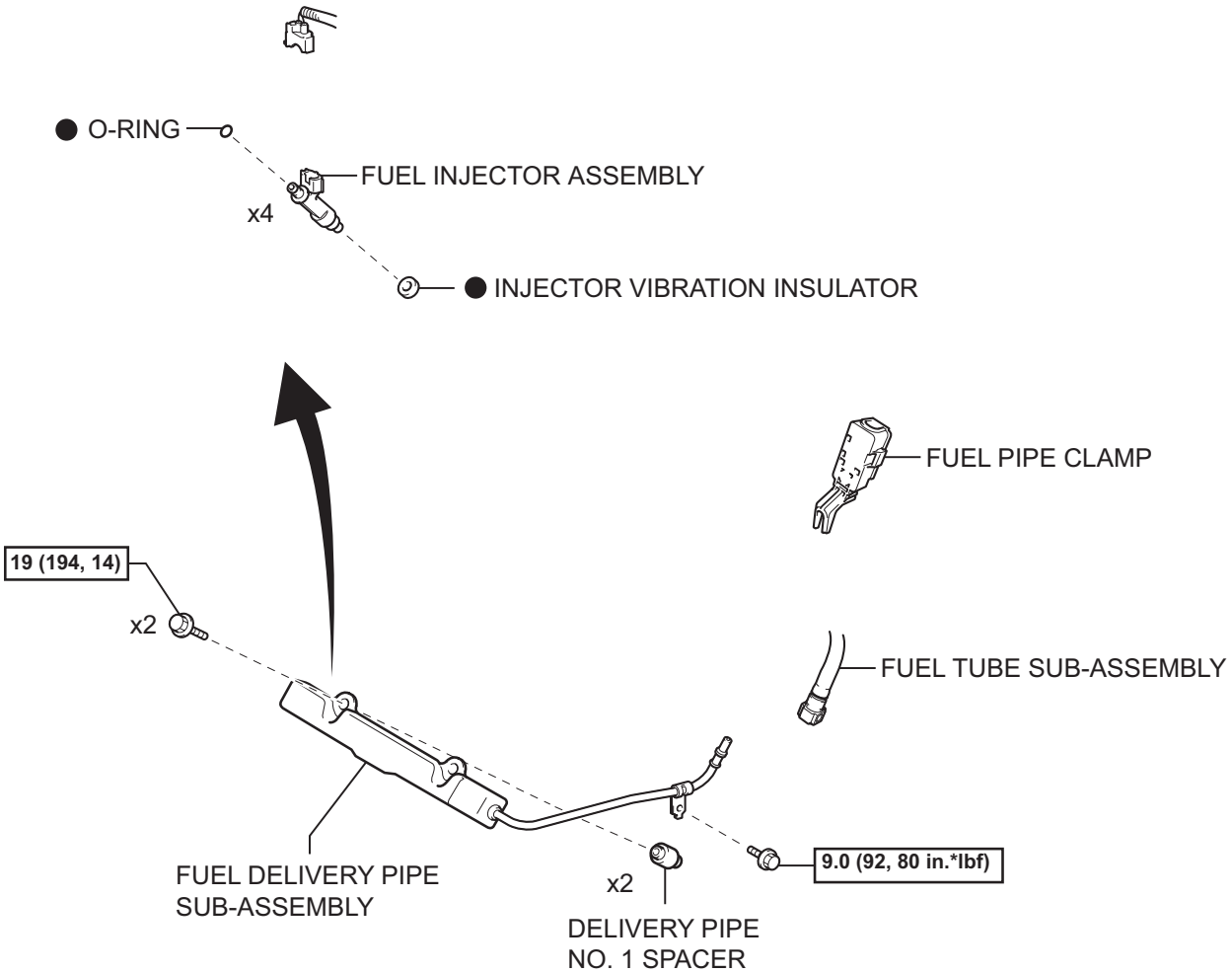

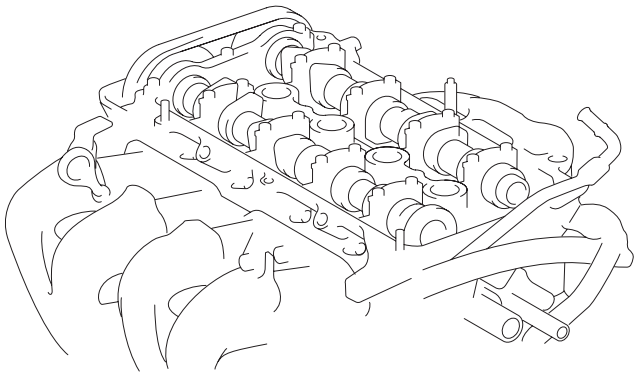

N*m (kgf*cm, ft.*lbf) : Specified torque

● Non-reusable part

T

A115505E01

REMOVAL

1. **DISCHARGE FUEL SYSTEM PRESSURE**
   (See page FU-1)
2. **DISCONNECT CABLE FROM NEGATIVE BATTERY TERMINAL**
3. **REMOVE CYLINDER HEAD COVER NO. 2 (See page IG-9)**
4. **REMOVE IGNITION COIL NO. 1 (See page IG-9)**
5. **REMOVE VENTILATION HOSE**
   (a) Disconnect the ventilation hose.

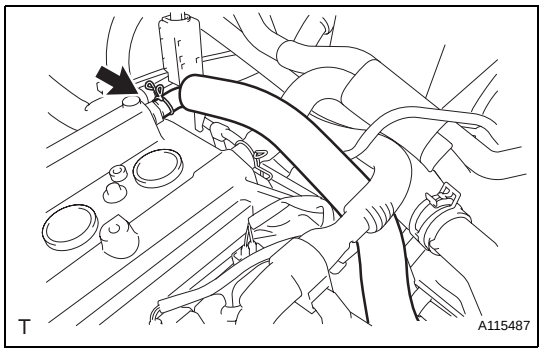

6. **REMOVE VENTILATION HOSE NO. 2**
   (a) Disconnect ventilation hose No. 2.

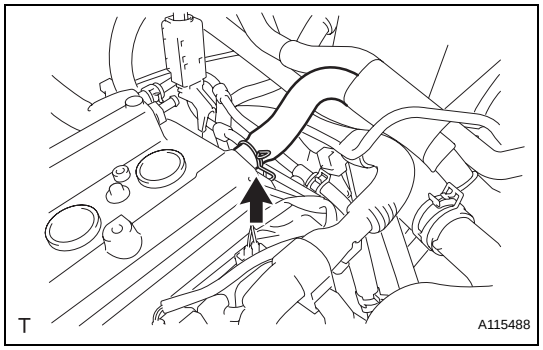

7. **REMOVE CYLINDER HEAD COVER SUB-ASSEMBLY**
   (a) Disconnect the fuel injector connectors.

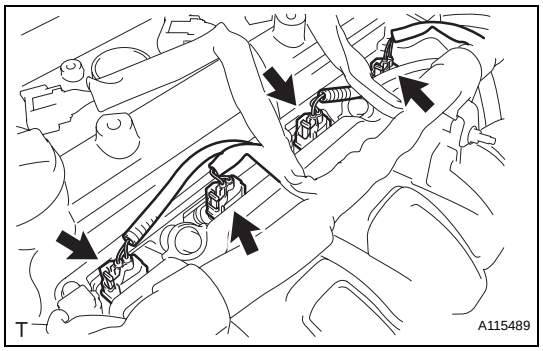

FU

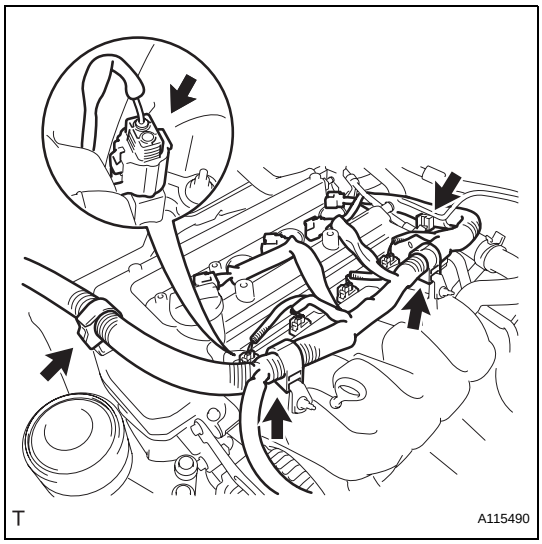

(b) Disconnect the connector and 3 wire harness clamps shown in the illustration and disconnect the engine wire harness.

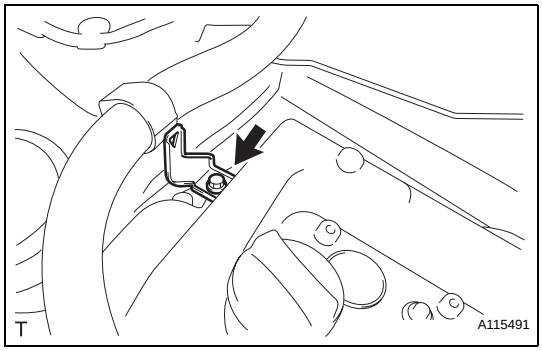

(c) Remove the bolt and remove the wire harness bracket.

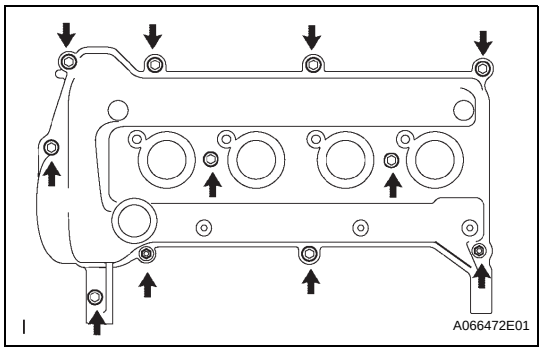

(d) Remove the 9 bolts, 2 nuts and 2 seal washers and then remove the cylinder head cover sub-assembly.

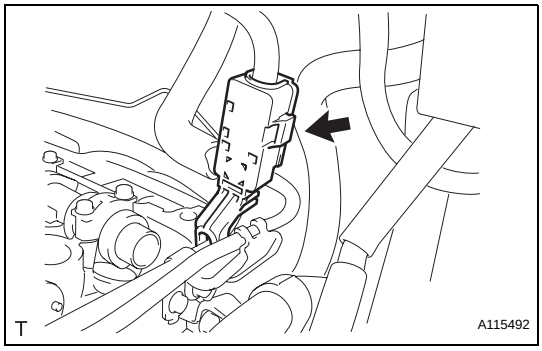

8. DISCONNECT FUEL TUBE SUB-ASSEMBLY

(a) Remove the fuel pipe clamp.

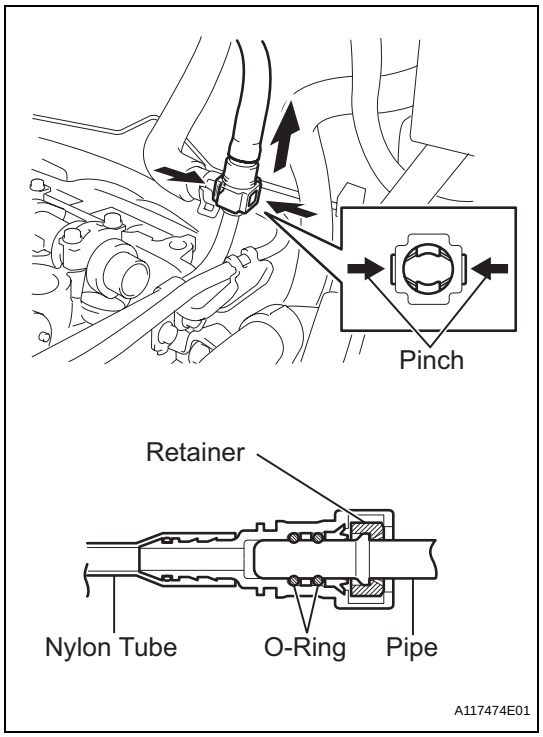

(b) Pinch the retainer of the fuel tube connector, then pull the fuel tube connector to disconnect the fuel tube out of the fuel delivery pipe sub-assembly.

NOTICE:

- **Remove any dirt and foreign matter from the fuel tube connector before performing this work.**
- **Do not allow any scratches or foreign matter on the parts when disconnecting, as the fuel tube connector has the O-ring that seals the pipe.**
- **Perform this work by hand. Do not use any tools.**
- **Do not forcibly bend, twist or turn the nylon tube.**
- **Protect the disconnected parts by covering them with a vinyl bag after disconnecting the fuel tube.**
- **If the fuel tube connector and pipe are stuck, push and pull to release them.**

FU

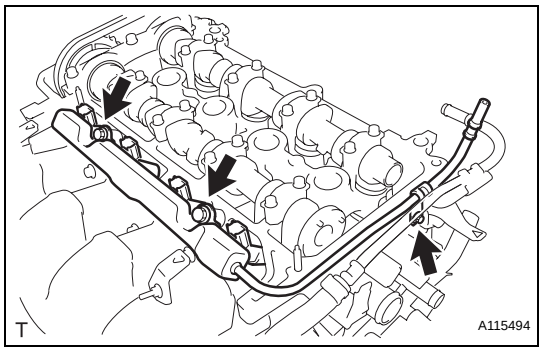

9. REMOVE FUEL DELIVERY PIPE SUB-ASSEMBLY

(a) Remove the 3 bolts and remove the fuel delivery pipe sub-assembly with 4 fuel injectors.

NOTICE:

Do not drop the fuel injectors when removing the fuel delivery pipe sub-assembly.

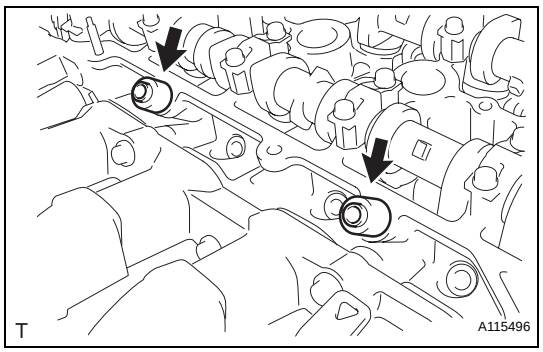

10. REMOVE DELIVERY PIPE NO. 1 SPACER

(a) Remove the 2 delivery pipe No. 1 spacers.

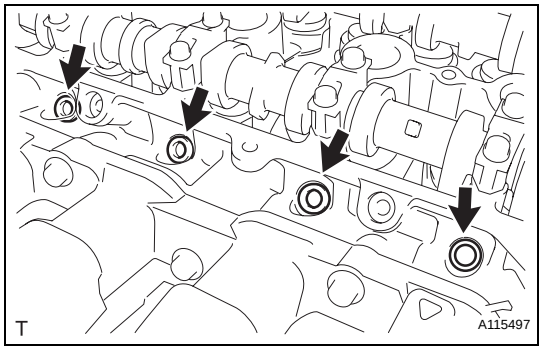

11. REMOVE INJECTOR VIBRATION INSULATOR

(a) Remove the 4 injector vibration insulators.

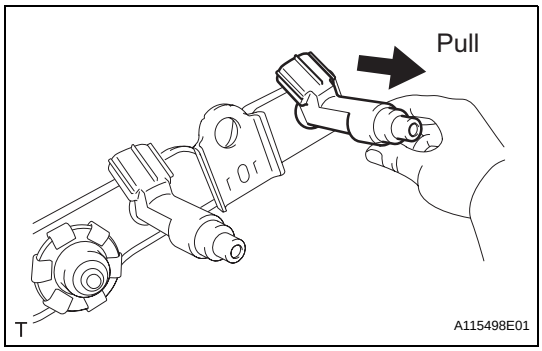

12. REMOVE FUEL INJECTOR ASSEMBLY

(a) Pull the 4 fuel injector assemblies out of the fuel delivery pipe sub-assembly.

INSPECTION

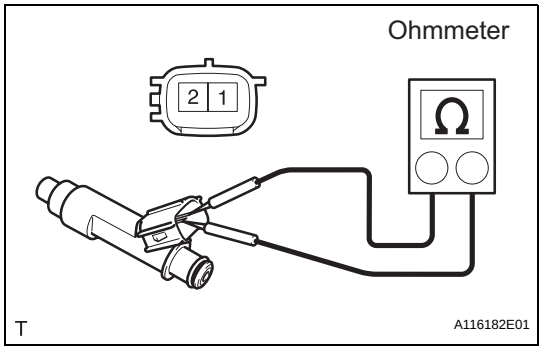

1. INSPECT FUEL INJECTOR ASSEMBLY

(a) Check the resistance.

(1) Using an ohmmeter, measure the resistance between the terminals.
Standard resistance:
11.6 to 12.4 Ω at 20°C (68°F)
If the result is not as specified, replace the injector assembly.

(b) Check the operation.
CAUTION:
Perform the inspection in a well-ventilated area. Do not perform the inspection near any naked flames.

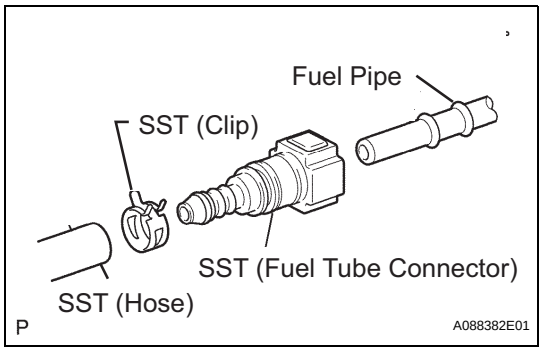

(1) Connect SST (fuel tube connector) to SST (hose), then connect them to the fuel pipe (vehicle side).
SST 09268-41048 (90467-13001, 95336-08070, 09268-41500)

(2) Install the O-ring onto the fuel injector assembly.

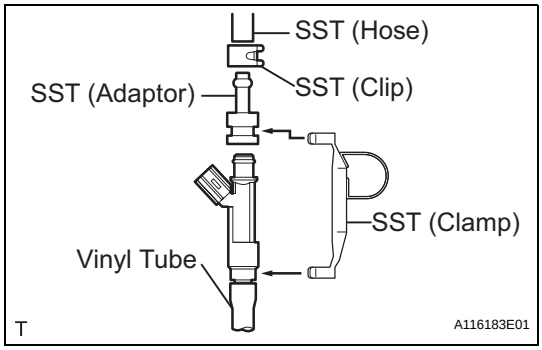

(3) Connect SST (adaptor and hose) to the injector assembly, and hold the injector assembly and union with SST (clamp).
SST 09268-41048 (09268-41110, 90467-13001, 95336-08070, 09268-41310)

(4) Set the injector assembly in a graduated cylinder.
CAUTION:
Install a suitable vinyl tube onto the injector assembly to prevent gasoline splashes.

(5) Operate the fuel pump (see page FU-7).

FU

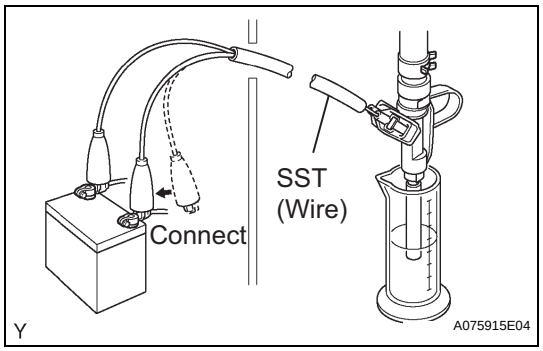

(6) Connect SST (wire) to the injector assembly and the battery for 15 seconds, and measure the injection volume with the graduated cylinder. Test each injector 2 or 3 times.
SST 09842-30080
Injection volume:
47 to 58 cm^3 (2.9 to 3.5 cu in.) per 15 seconds
Difference between each injector:
11 cm^3 (0.6 cu in.) or less
NOTICE:
Always do the switching at the battery side.
If the injection volume is not as specified, replace the injector assembly.

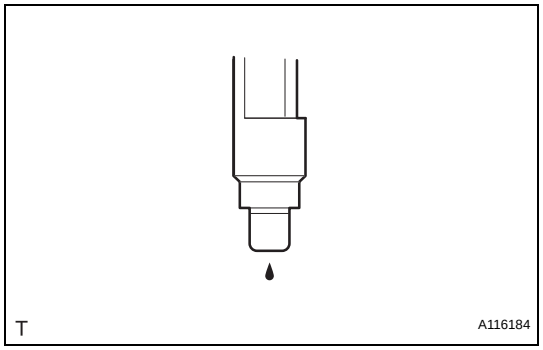

(c) Check the leakage.
(1) In the condition above, disconnect the test probes of SST (wire) from the battery and check the injector for fuel leakage.
Fuel drop:
1 drop or less every 12 minutes

FU

INSTALLATION

1. INSTALL FUEL INJECTOR ASSEMBLY

(a) Apply a light coat of gasoline or spindle oil to new O-rings, then install one onto each fuel injector.
(b) Apply a light coat of gasoline or spindle oil to the contact surfaces of the fuel delivery pipe and the O-ring of the fuel injector.

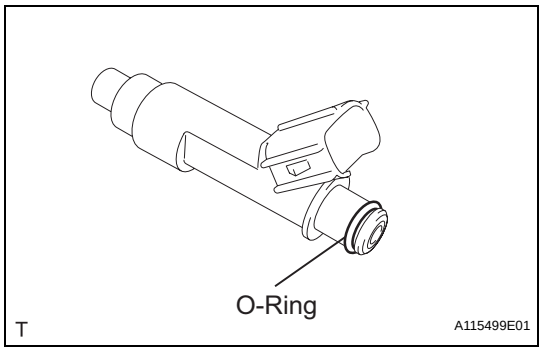

(c) While turning the fuel injector left and right, install it onto the fuel delivery pipe.
NOTICE:
- **Do not twist the O-ring.**
- **After installing the fuel injectors, check that they turn smoothly. If not, replace the O-ring with a new one.**

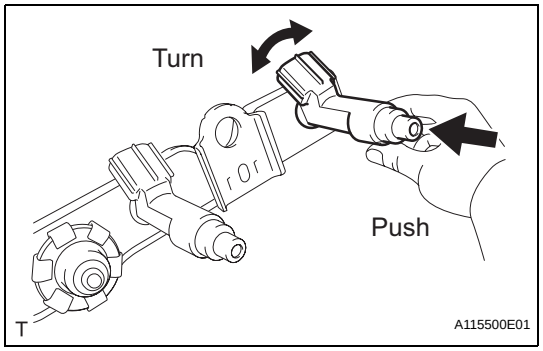

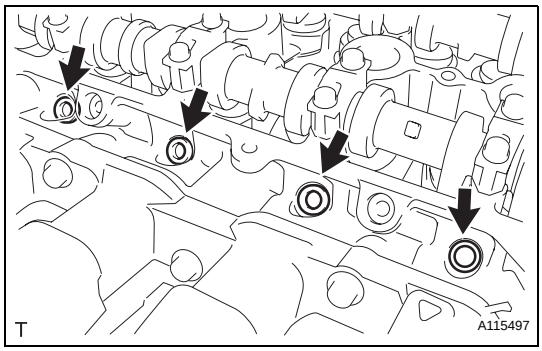

2. INSTALL INJECTOR VIBRATION INSULATOR

(a) Install 4 new injector vibration insulators onto the cylinder head.

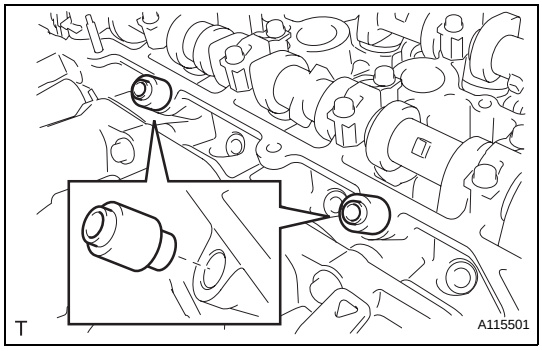

3. INSTALL DELIVERY PIPE NO. 1 SPACER

(a) Install the 2 No. 1 delivery pipe spacers onto the cylinder head.

NOTICE:

Install the delivery pipe No. 1 spacer in the correct direction.

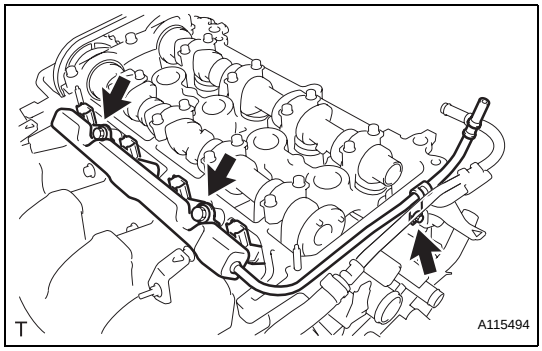

4. INSTALL FUEL DELIVERY PIPE SUB-ASSEMBLY

(a) Install the fuel delivery pipe sub-assembly with the 4 fuel injectors, then provisionally install the 3 bolts.

NOTICE:

- **Do not drop the fuel injectors when installing the fuel delivery pipe sub-assembly.**
- **Check that the fuel injectors rotate smoothly after installing the fuel delivery pipe sub-assembly.**

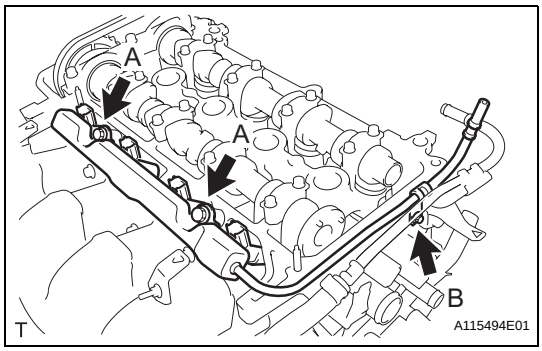

(b) Tighten the 3 bolts to the specified torque.

Torque: 19 N*m (194 kgf*cm, 14 ft.*lbf) for bolt A
9.0 N*m (92 kgf*cm, 80 in.*lbf) for bolt B

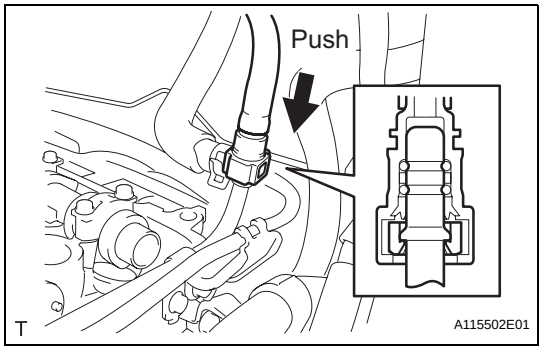

5. CONNECT FUEL TUBE SUB-ASSEMBLY

(a) Insert the fuel tube connector into the fuel delivery pipe until a click sound can be heard.

NOTICE:

- **Check that there are no scratches or foreign matter around the disconnected parts of the fuel tube connector and pipe before performing this work.**
- **After connecting the fuel tube, check that the fuel tube connector and pipe are securely connected by pulling them.**

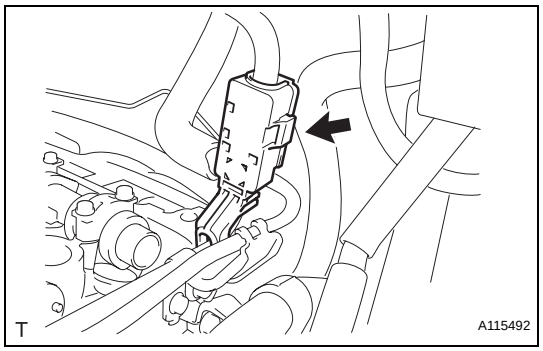

(b) Install the fuel pipe clamp.

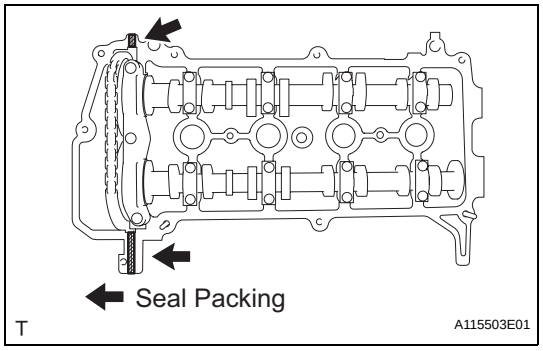

6. INSTALL CYLINDER HEAD COVER SUB-ASSEMBLY

(a) Apply seal packing to the cylinder head as shown in the illustration.
Seal Packing:
Toyota Genuine Seal Packing Black, Three Bond 1207B or Equivalent
NOTICE:
- **Remove any oil from the contact surface.**
- **Install the cylinder head cover sub-assembly within 3 minutes of applying the seal packing.**
- **Do not start the engine for at least 2 hours after the installation.**

(b) Install the cylinder head cover sub-assembly with the 9 bolts, 2 nuts and 2 seal washers.

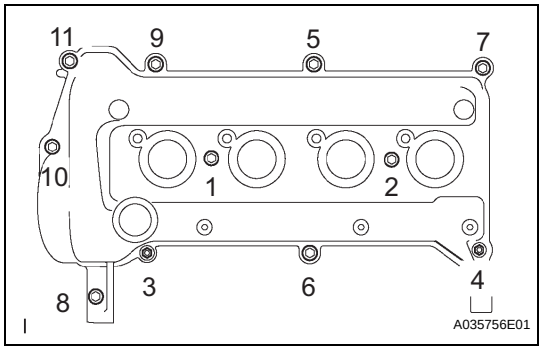

(c) Tighten the 9 bolts and 2 nuts in the sequence shown in the illustration.
Torque: 10 N*m (102 kgf*cm, 7.0 ft.*lbf)

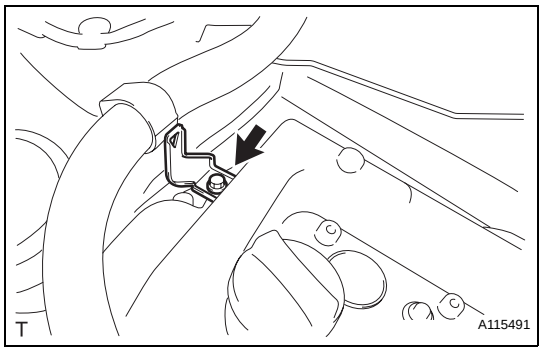

(d) Install the wire harness bracket with the bolt.
Torque: 13 N*m (133 kgf*cm, 9.6 ft.*lbf)

FU

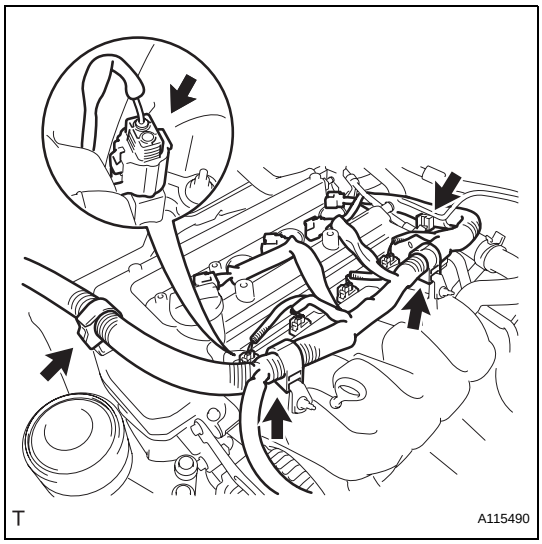

(e) Connect the connector and wire harness clamp shown in the illustration and connect the engine wire harness.

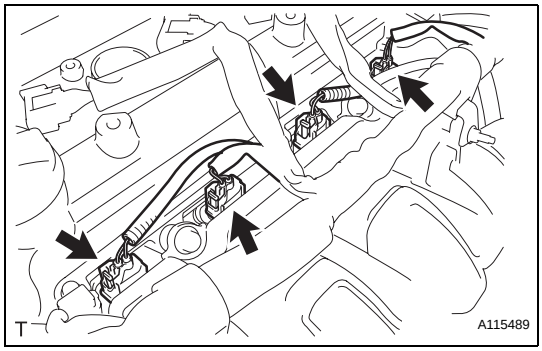

(f) Connect the fuel injector connectors.

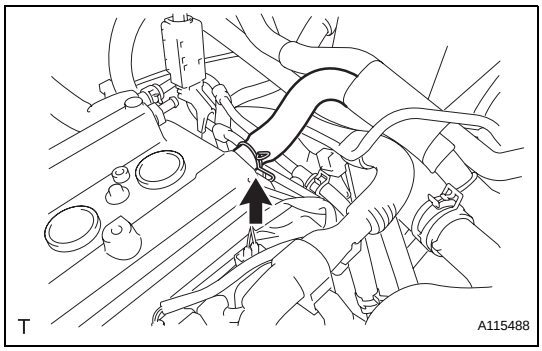

7. CONNECT VENTILATION HOSE NO. 2

(a) Connect ventilation hose No. 2.

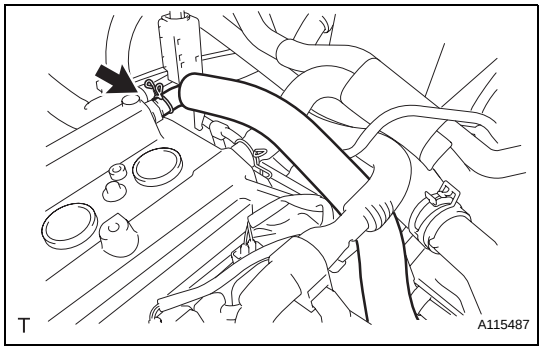

8. CONNECT VENTILATION HOSE

(a) Connect the ventilation hose.

9. INSTALL IGNITION COIL NO. 1 (See page IG-9)

10. CONNECT CABLE TO NEGATIVE BATTERY TERMINAL
Torque: 5.4 N*m (55 kgf*cm, 48 in.*lbf)

11. CHECK FOR FUEL LEAKAGE (See page FU-7)

12. CHECK FOR ENGINE OIL LEAKAGE

13. INSTALL CYLINDER HEAD COVER NO. 2 (See page IG-10)

FUEL PUMP

COMPONENTS

for Hatchback:

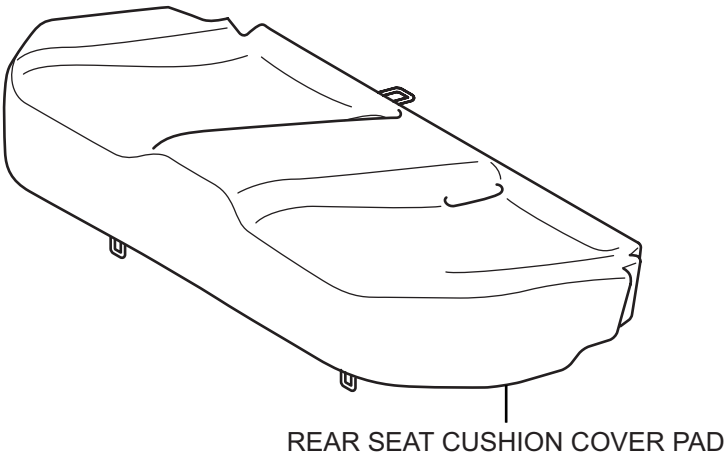

H

A119203E03

for Sedan:

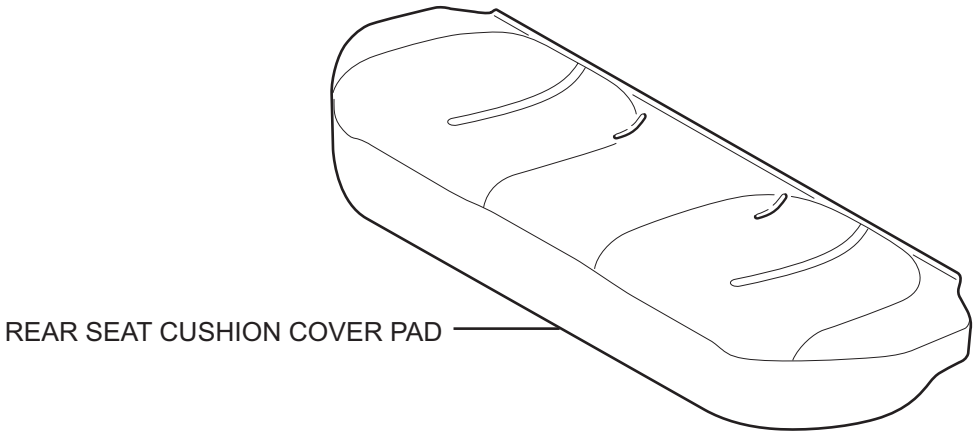

T

A133348E01

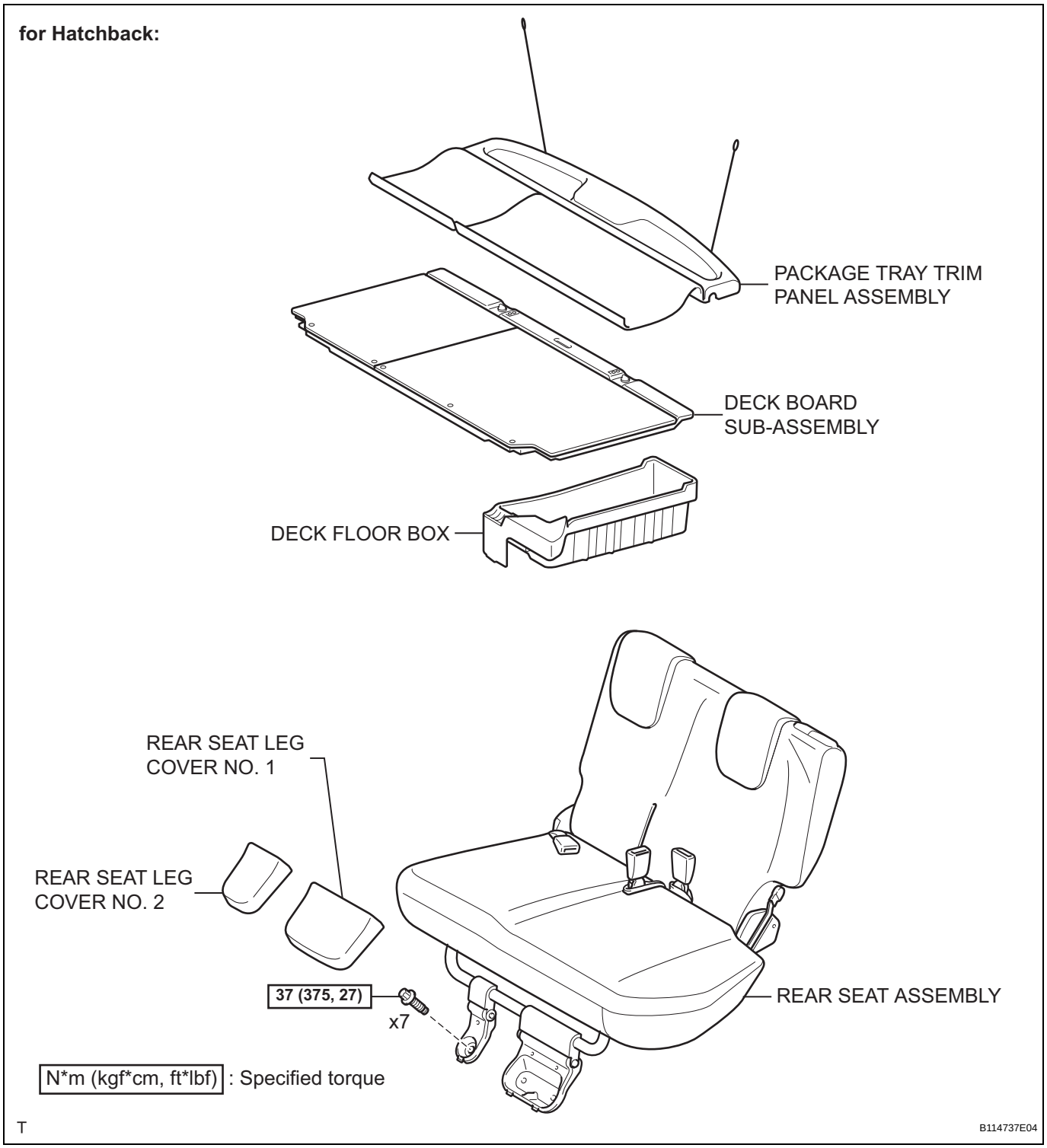
for Hatchback:
PACKAGE TRAY TRIM PANEL ASSEMBLY
DECK BOARD SUB-ASSEMBLY
DECK FLOOR BOX
REAR SEAT LEG COVER NO. 1
REAR SEAT LEG COVER NO. 2
37 (375, 27)
x7
REAR SEAT ASSEMBLY
N*m (kgf*cm, ft*lbf) : Specified torque
T
B114737E04

FU

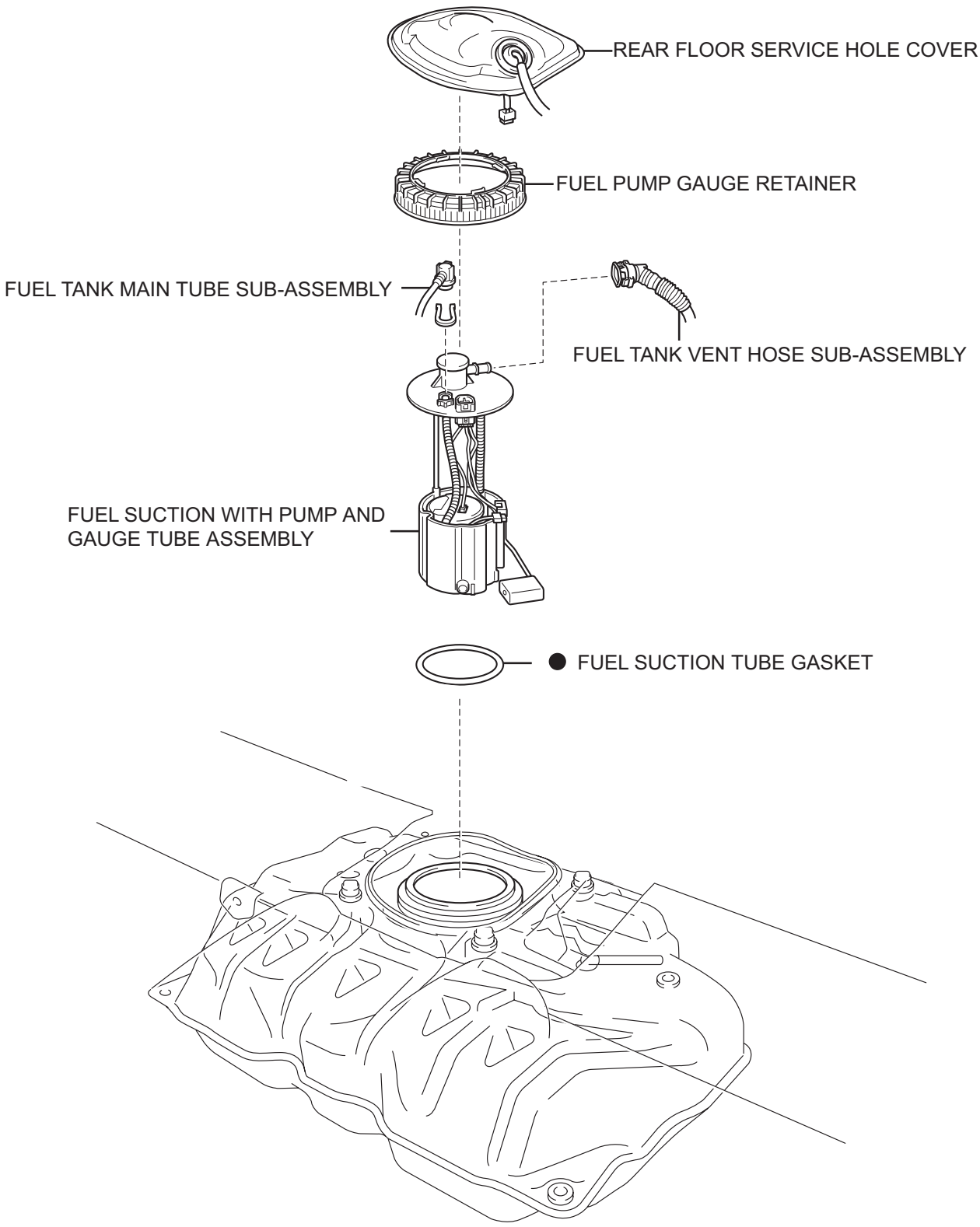

● Non-reusable part

N

A115458E01

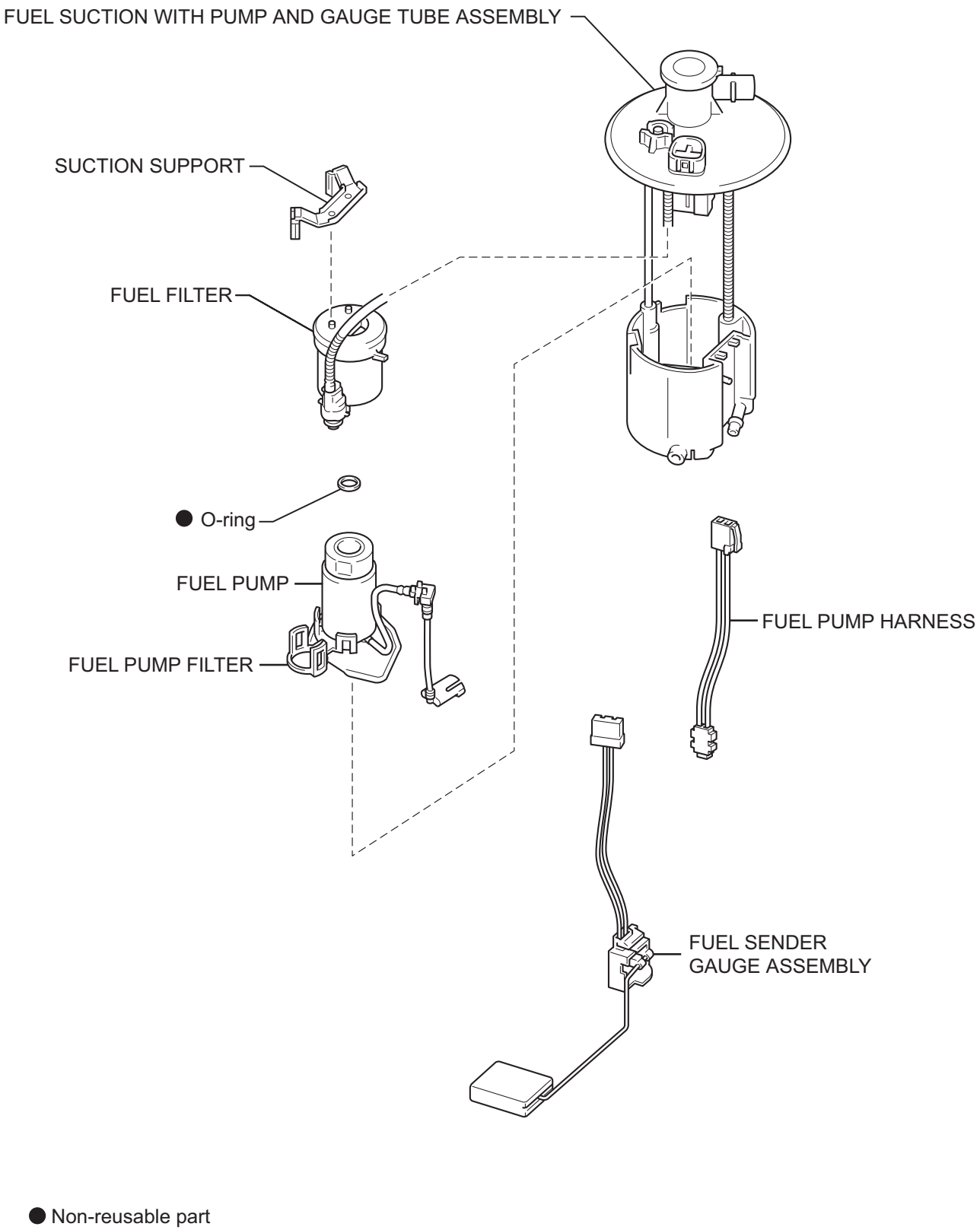

N

A115459E01

FU

REMOVAL

NOTICE:
Always use "Torx" socket wrench E10 when removing the rear seat.

1. **REMOVE REAR SEAT CUSHION COVER PAD (for Hatchback) (See page SE-114)**
2. **REMOVE REAR SEAT CUSHION COVER PAD (for Sedan) (See page SE-46)**
3. **REMOVE PACKAGE TRAY TRIM PANEL ASSEMBLY (for Hatchback) (See page IR-48)**
4. **REMOVE DECK BOARD SUB-ASSEMBLY (for Hatchback) (See page IR-48)**
5. **REMOVE DECK FLOOR BOX (for Hatchback) (See page SE-70)**
6. **REMOVE REAR SEAT LEG COVER NO. 1 (for Hatchback) (See page SE-70)**
7. **REMOVE REAR SEAT LEG COVER NO. 2 (for Hatchback) (See page SE-70)**
8. **REMOVE REAR SEAT ASSEMBLY (for Hatchback) (See page SE-71)**
9. **REMOVE REAR FLOOR SERVICE HOLE COVER**
   (a) Remove the rear floor service hole cover.

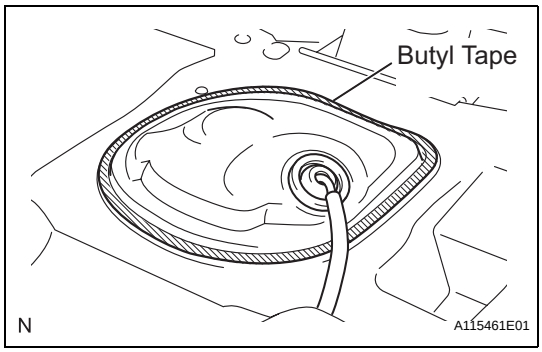

   (b) Disconnect the fuel pump connector.

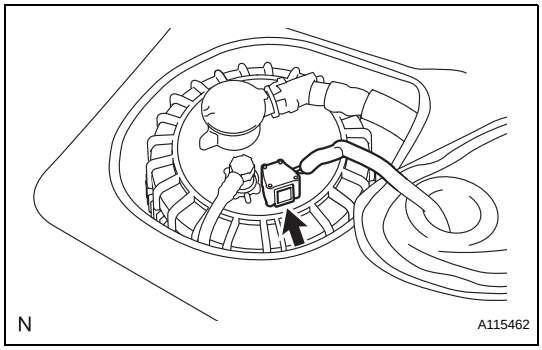

10. **DISCHARGE FUEL SYSTEM PRESSURE**
    (a) Discharge the fuel system pressure (See page FU-1).
11. **DISCONNECT CABLE FROM NEGATIVE BATTERY TERMINAL**

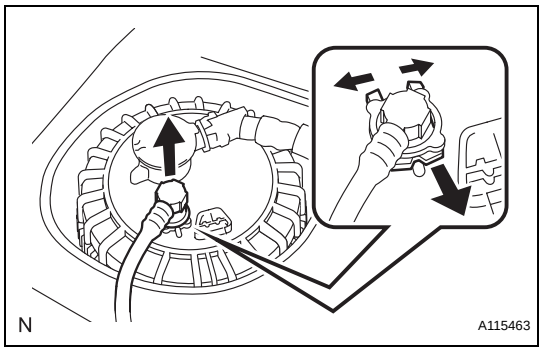

12. DISCONNECT FUEL TANK MAIN TUBE SUB-ASSEMBLY

(a) Widen the tip of the tube joint clip and pull out the clip in the direction indicated by the arrow.

(b) Disconnect the fuel tank main tube.

NOTICE:

- **Keep the O-ring free of any foreign matter, as it becomes contaminated easily.**
- **Do not use any tools in this procedure.**
- **Do not forcefully bend or twist the tube.**
- **Put the tube in a plastic bag to prevent damage and contamination.**
- **If the fuel suction plate and tube are stuck together, pinch the tube and turn it carefully to disconnect them.**
- **Do not damage any clips. If a clip is damaged, replace it.**

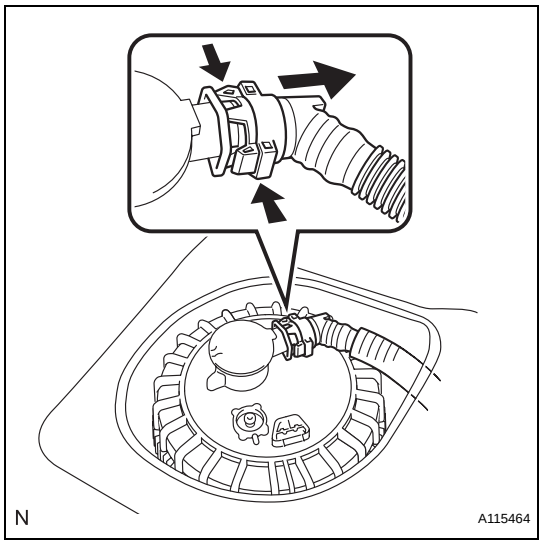

13. DISCONNECT FUEL TANK VENT HOSE SUB-ASSEMBLY

(a) Disconnect the fuel tank vent hose.

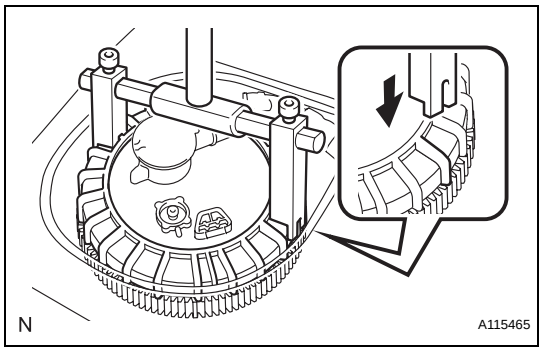

14. REMOVE FUEL PUMP GAUGE RETAINER

(a) Using SST, remove the fuel pump gauge retainer.

SST 09808-14020 (09808-01410, 09808-01420, 09808-01430)

HINT:

Align the claws of the fuel pump gauge retainer with the tips of SST.

15. REMOVE FUEL SUCTION WITH PUMP AND GAUGE TUBE ASSEMBLY

(a) Remove the fuel suction with pump and gauge tube.

NOTICE:

Do not bend the arm of the sender gauge.

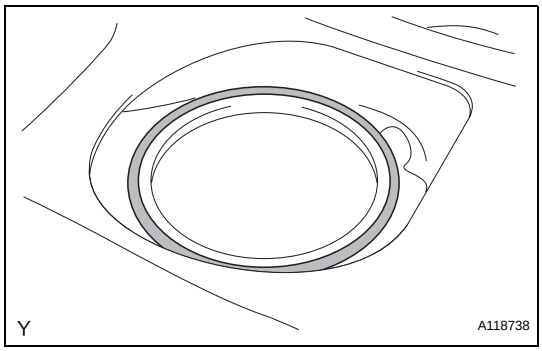

(b) Remove the fuel suction tube gasket from the fuel tank.

DISASSEMBLY

1. REMOVE FUEL SENDER GAUGE ASSEMBLY

(a) Disconnect the connector of the fuel sender gauge.

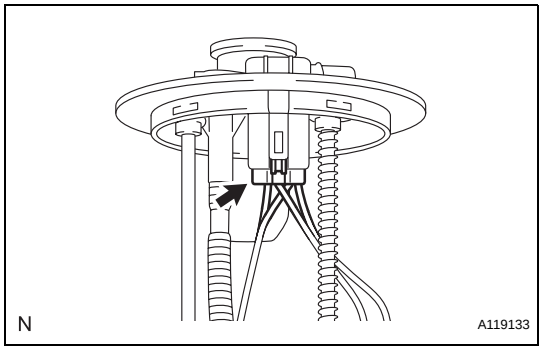

(b) Release the lock as shown in the illustration and slide the fuel sender gauge to remove it.

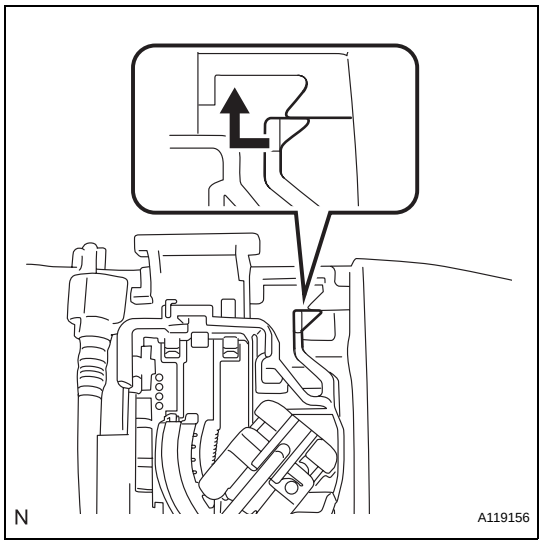

2. REMOVE FUEL PUMP

(a) Disconnect the connector of the fuel pump harness.

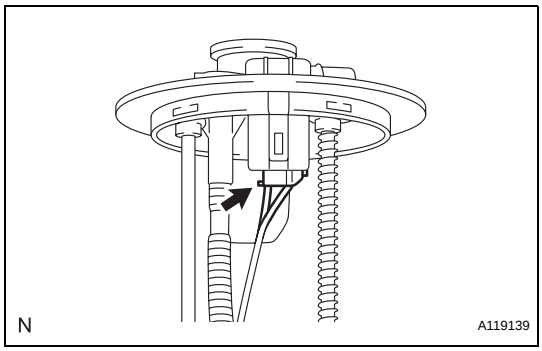

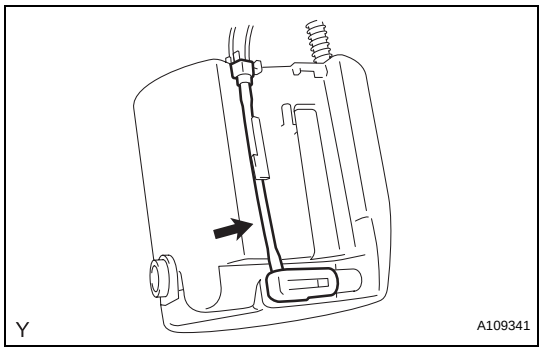

(b) Disconnect the fuel pump filter hose.

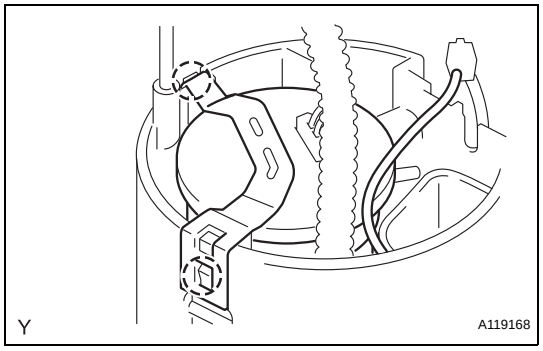

(c) Using a screwdriver with its tip wrapped in protective tape, disengage the 2 claws, and remove the fuel filter and fuel pump.

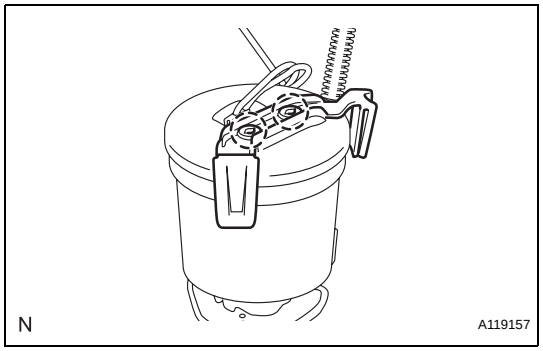

(d) Disengage the 2 claws and remove the fuel suction support.

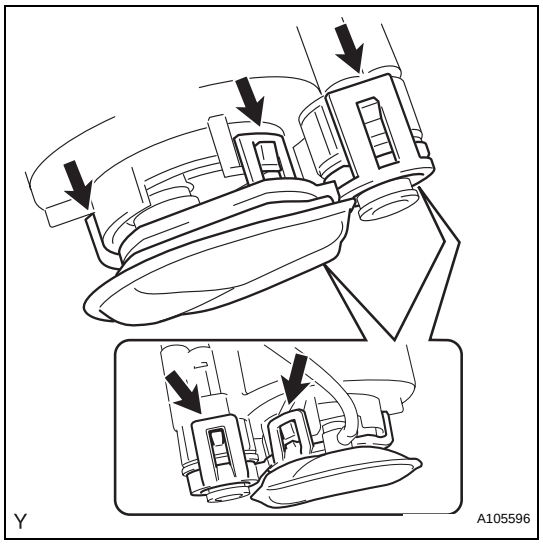

(e) Using a screwdriver with its tip wrapped in protective tape, disengage the 5 claws, and remove the fuel pump filter and fuel pump from the fuel filter.

NOTICE:

- **Do not damage the fuel pump filter.**
- **Do not remove the suction filter.**
- **Do not use either the fuel pump or the suction filter if the suction filter is removed from the fuel pump.**

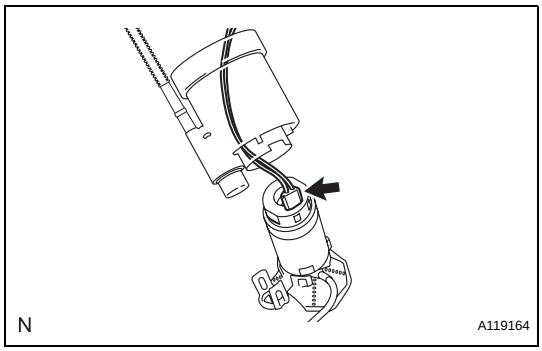

(f) Disconnect the fuel pump harness.

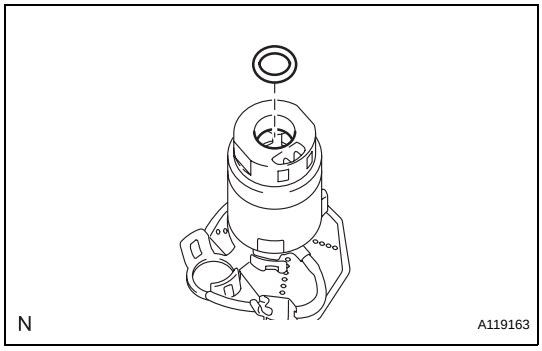

(g) Remove the O-ring.

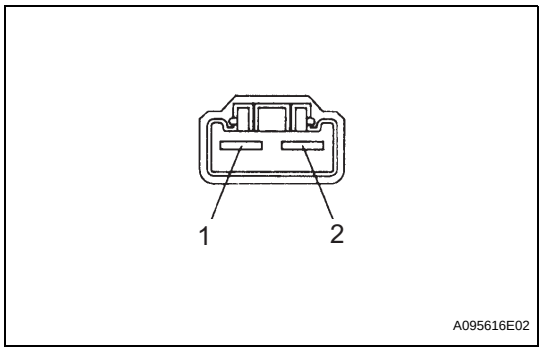

INSPECTION

1. INSPECT FUEL PUMP

(a) Check the resistance of the fuel pump.

(1) Using an ohmmeter, measure the resistance between terminals 1 and 2.

Standard resistance:

0.2 to 3.0 Ω at 20 °C (68°F)

(b) Inspect the operation of the fuel pump.

(1) Connect the positive (+) battery lead to terminal 1 of the connector, and the negative (-) lead to terminal 2. Check that the fuel pump operates.

NOTICE:

- **These tests must be performed within 10 seconds of connecting the battery to prevent the coil from burning out.**
- **Keep the fuel pump as far away from the battery as possible.**
- **Turn the voltage on and off on the battery side, not the fuel pump side.**

REASSEMBLY

1. INSTALL FUEL PUMP

(a) Apply gasoline to a new O-ring, and then install it into the fuel filter.

NOTICE:

- **Do not disassemble the fuel pump or the suction filter because they are nonreusable parts.**

(b) Connect the fuel pump harness.

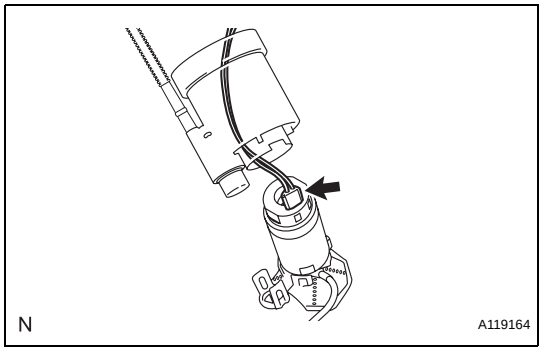

2. INSTALL FUEL PUMP FILTER

(a) Engage the 5 claws of the fuel pump.

NOTICE:

- **Do not remove the suction filter.**
- **Do not use either the fuel pump or the suction filter if the suction filter is removed from the fuel pump.**

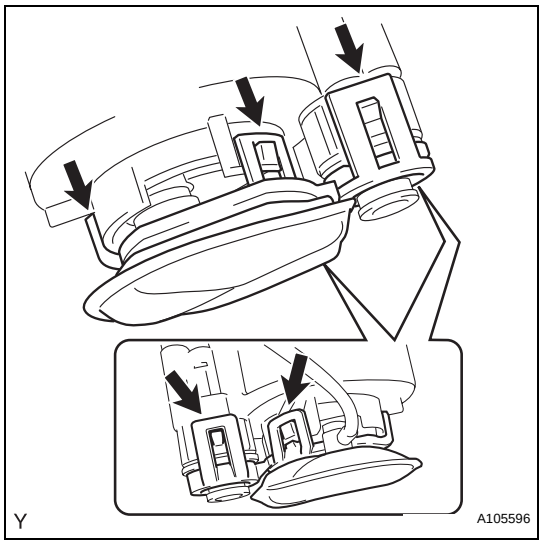

(b) Engage the 2 claws of the fuel suction support.

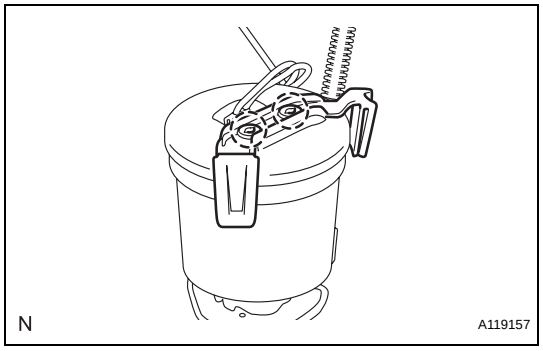

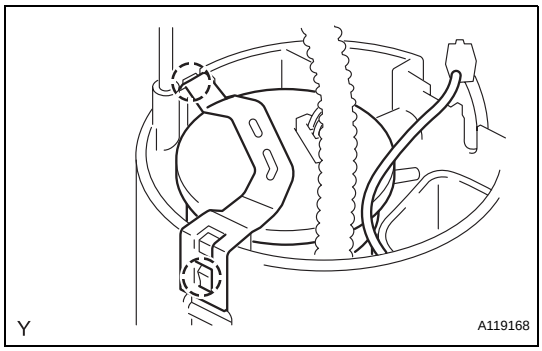

(c) Engage the 2 claws of the fuel suction support and install the fuel filter and the fuel pump onto the fuel sub-tank.

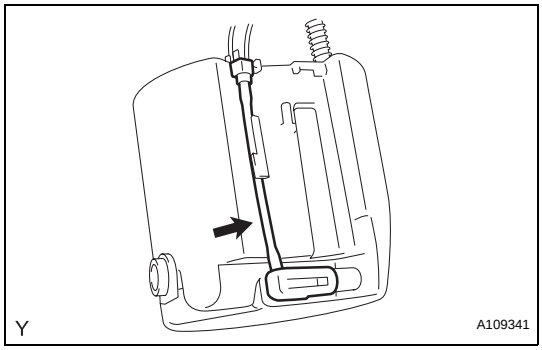

(d) Connect the fuel pump filter hose.

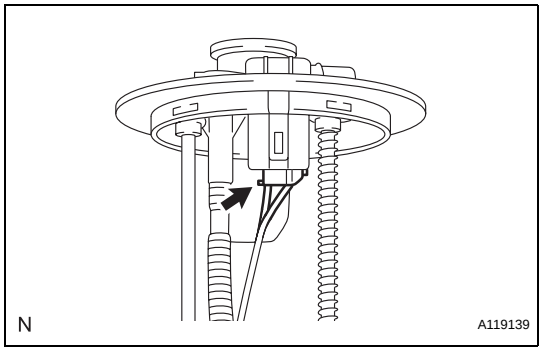

(e) Connect the connector of the fuel pump harness.

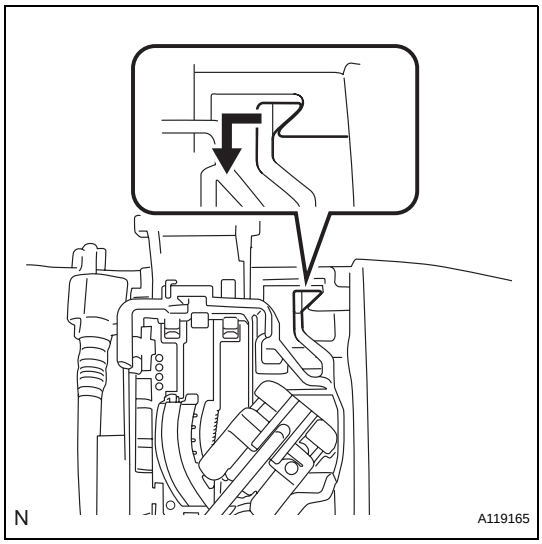

3. INSTALL FUEL SENDER GAUGE ASSEMBLY

(a) Install the fuel sender gauge by sliding it downward.

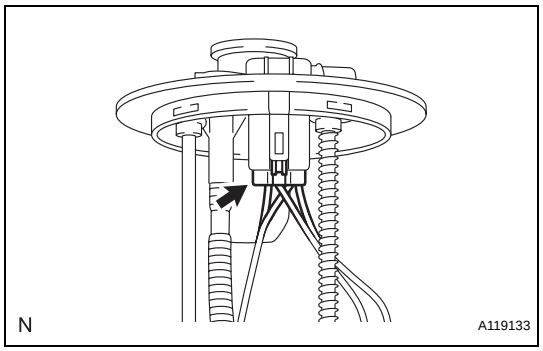

(b) Connect the connector of the fuel sender gauge.

INSTALLATION

NOTICE:
Always use "Torx" socket wrench E10 when installing the rear seat.

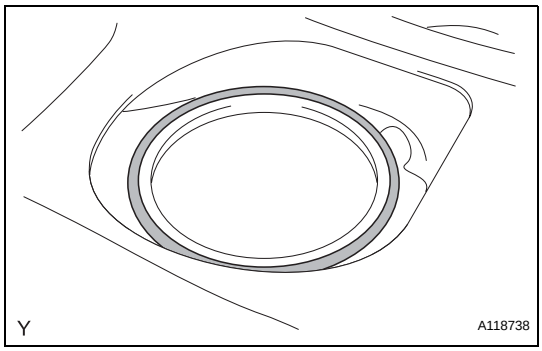

1. INSTALL FUEL SUCTION WITH PUMP AND GAUGE TUBE ASSEMBLY

(a) Install a new fuel suction tube gasket onto the fuel tank.

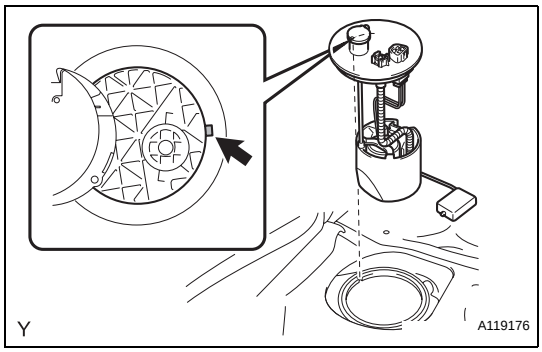

(b) Align the protrusion of the fuel pump with the cutout of the fuel tank and install the fuel suction with pump and gauge tube assembly.
NOTICE:
The arm of the sender gauge should not be bent.

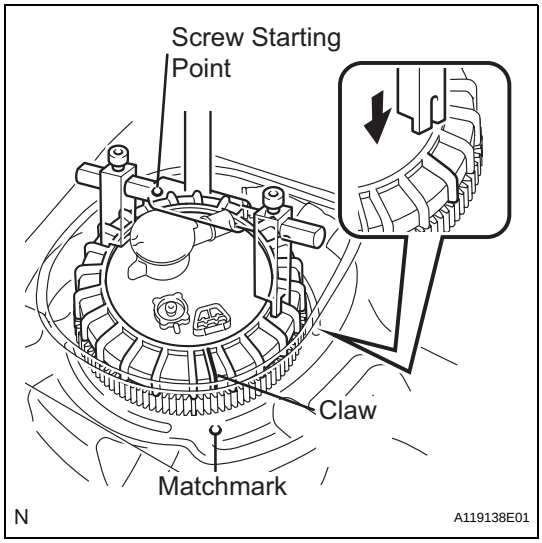

2. INSTALL FUEL PUMP GAUGE RETAINER

(a) Using SST, turn the retainer 540° clockwise from the screw starting point and align the claw of the retainer with the matchmark on the fuel tank.
SST 09808-14020 (09808-01410, 09808-01420, 09808-01430)
NOTICE:
Replace the fuel pump gauge retainer with a new one if not installed properly.
Part No. 77144-52040
HINT:
- Align the claws of the fuel pump gauge retainer with the tips of SST.
- At the point where the retainer is turned 90° from the start of the thread, push the retainer in from the opposite side to the start of the thread. Check that the thread of the retainer is properly engaged with that on the tank.

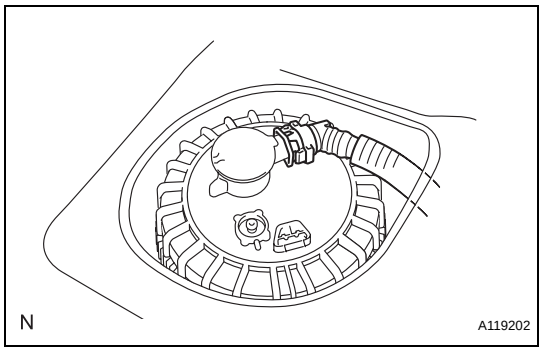

3. CONNECT FUEL TANK VENT HOSE SUB-ASSEMBLY

(a) Connect the fuel tank vent hose.

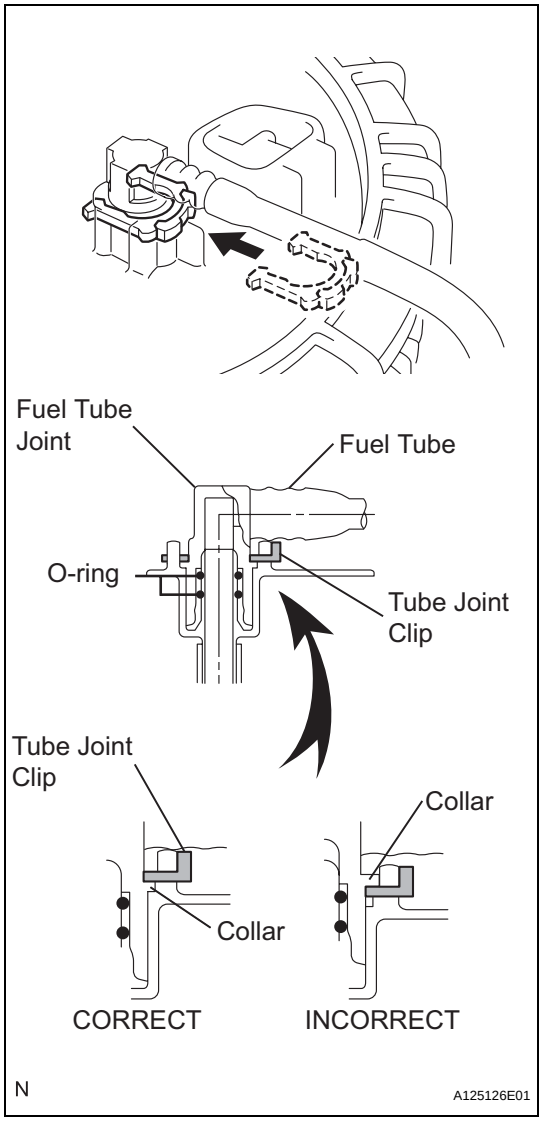

4. CONNECT FUEL TANK MAIN TUBE SUB-ASSEMBLY

(a) Insert the fuel tank main tube.

(b) Install the tube joint clip.

NOTICE:

- **Check that there are no scratches or foreign matter on the connecting parts.**
- **Check that the fuel tube joint is inserted securely.**
- **After installing the tube joint clip, check that the fuel tube joint has not been pulled off.**
- **Do not damage any clips. If a clip is damaged, replace it.**

FU

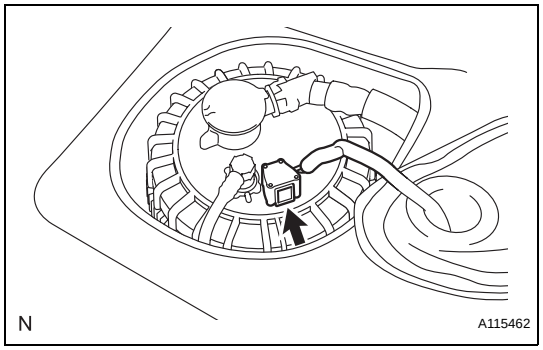

5. INSTALL REAR FLOOR SERVICE HOLE COVER

(a) Connect the fuel pump connector.

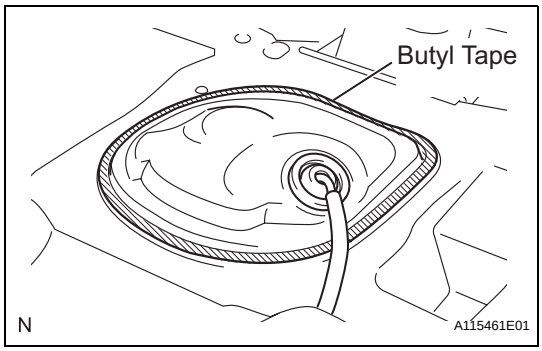

(b) Install the rear service hole cover with new butyl tape.

6. **INSTALL REAR SEAT ASSEMBLY (for Hatchback) (See page SE-84)**
7. **INSTALL REAR SEAT LEG COVER NO. 2 (for Hatchback) (See page SE-85)**
8. **INSTALL REAR SEAT LEG COVER NO. 1 (for Hatchback) (See page SE-85)**
9. **INSTALL DECK FLOOR BOX (for Hatchback) (See page SE-85)**
10. **INSTALL DECK BOARD SUB-ASSEMBLY (for Hatchback) (See page IR-83)**
11. **INSTALL PACKAGE TRAY TRIM PANEL ASSEMBLY (for Hatchback) (See page IR-83)**
12. **INSTALL REAR SEAT CUSHION COVER PAD (for Sedan) (See page SE-53)**
13. **INSTALL REAR SEAT CUSHION COVER PAD (for Hatchback) (See page SE-123)**
14. **CONNECT CABLE TO NEGATIVE BATTERY TERMINAL**
    Torque: 5.4 N*m (55 kgf*cm, 48 in.*lbf)
15. **CHECK FOR FUEL LEAKAGE (See page FU-7)**

FUEL TANK

COMPONENTS

for Hatchback:

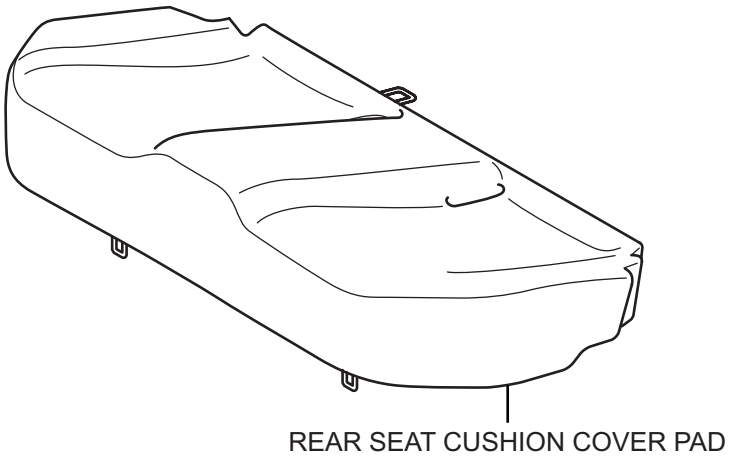

H

A119203E03

for Sedan:

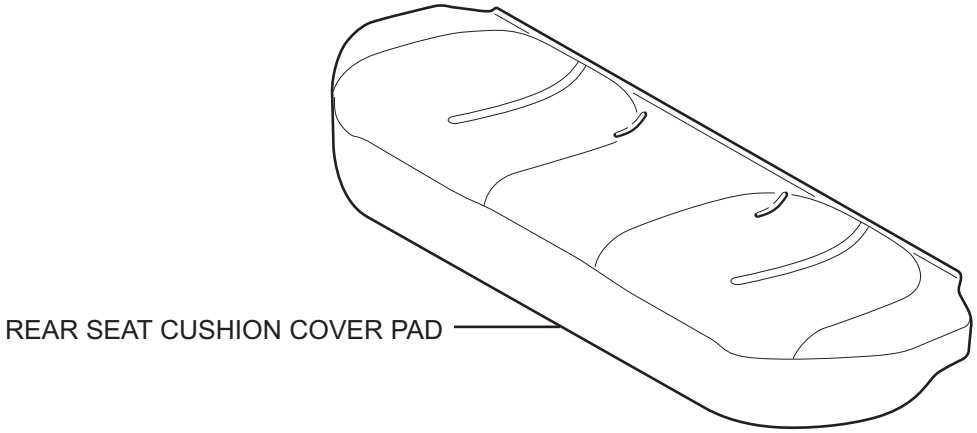

T

A133348E01

for Hatchback:

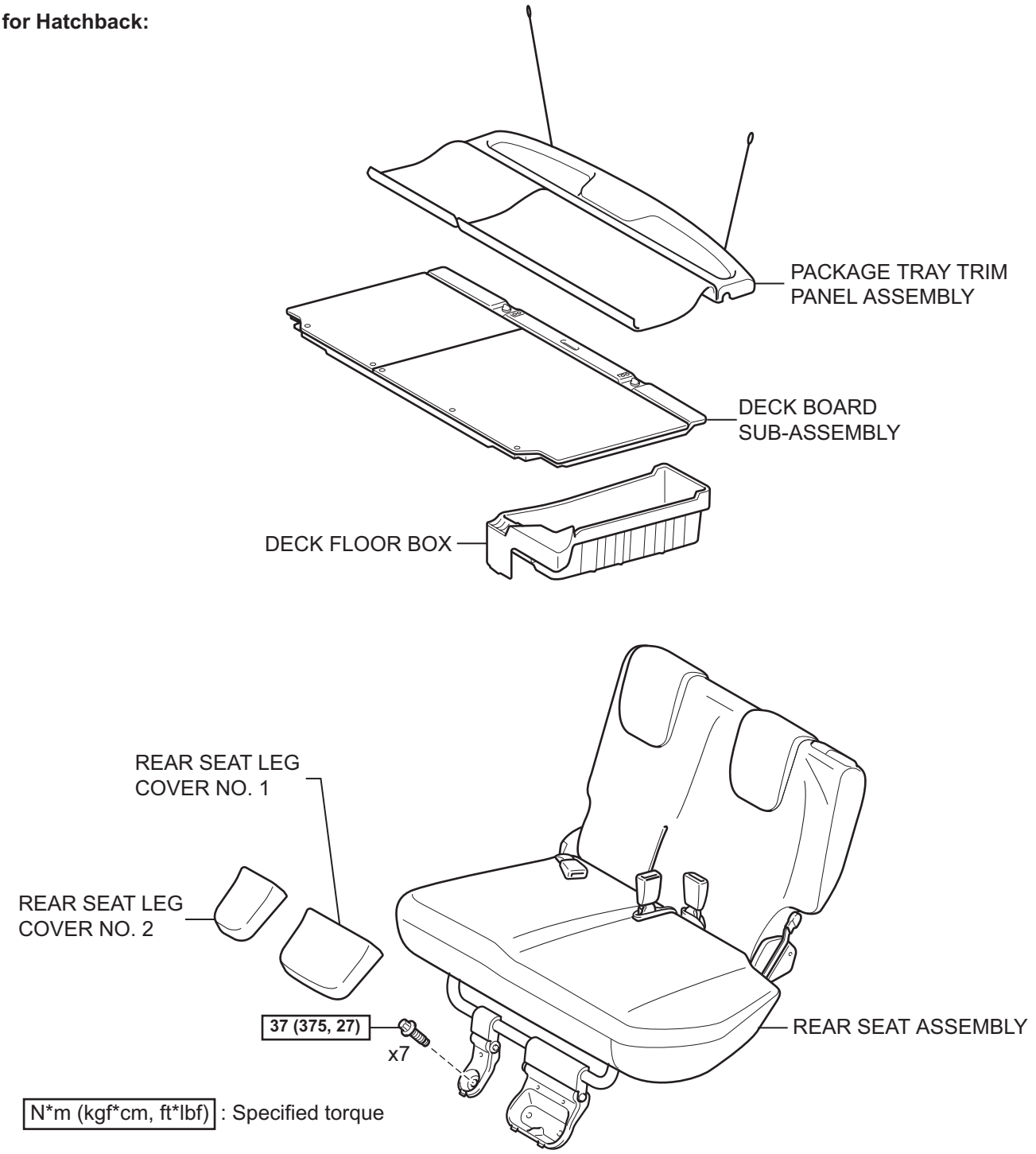

T

B114737E04

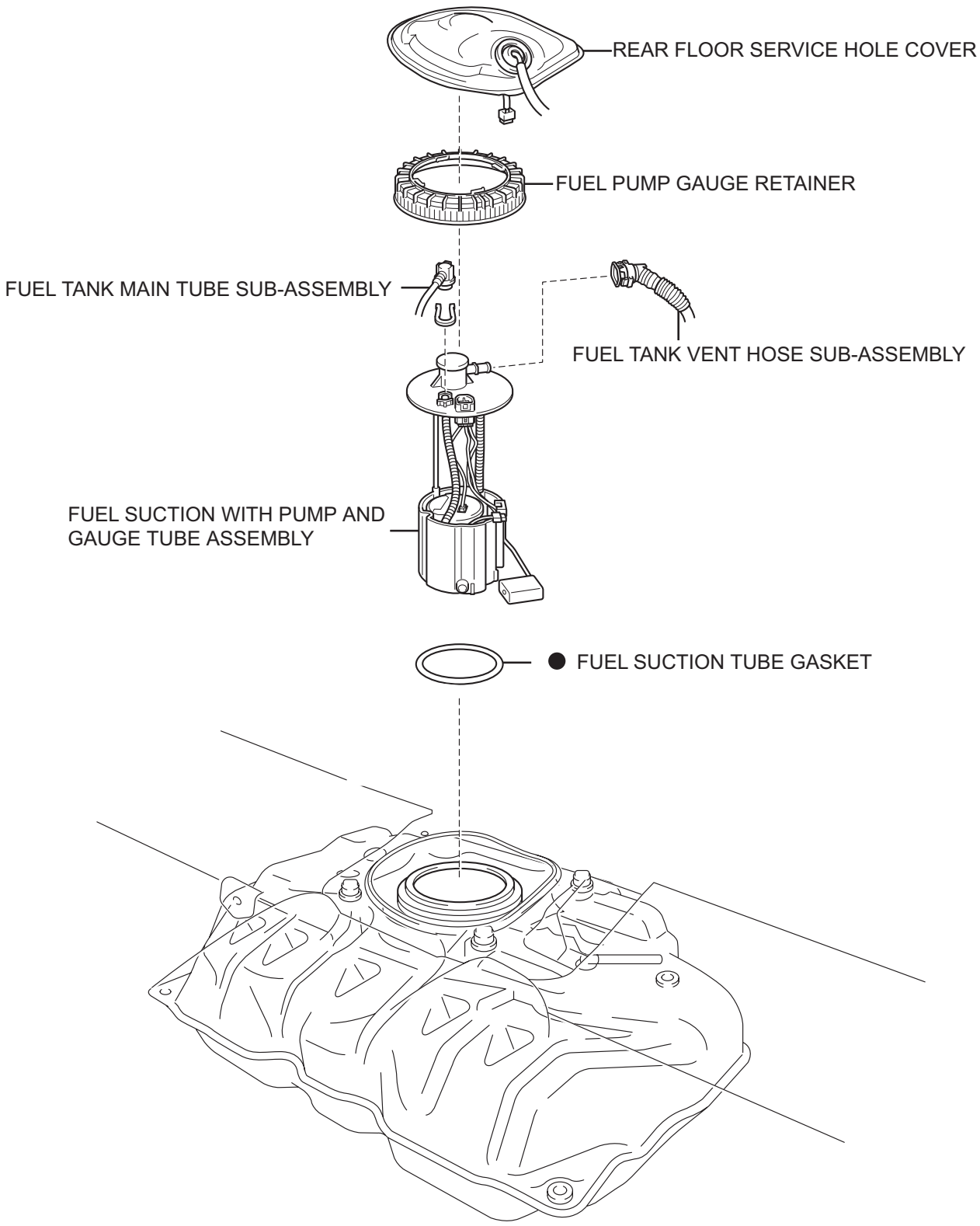

● Non-reusable part

N

A115458E01

FU

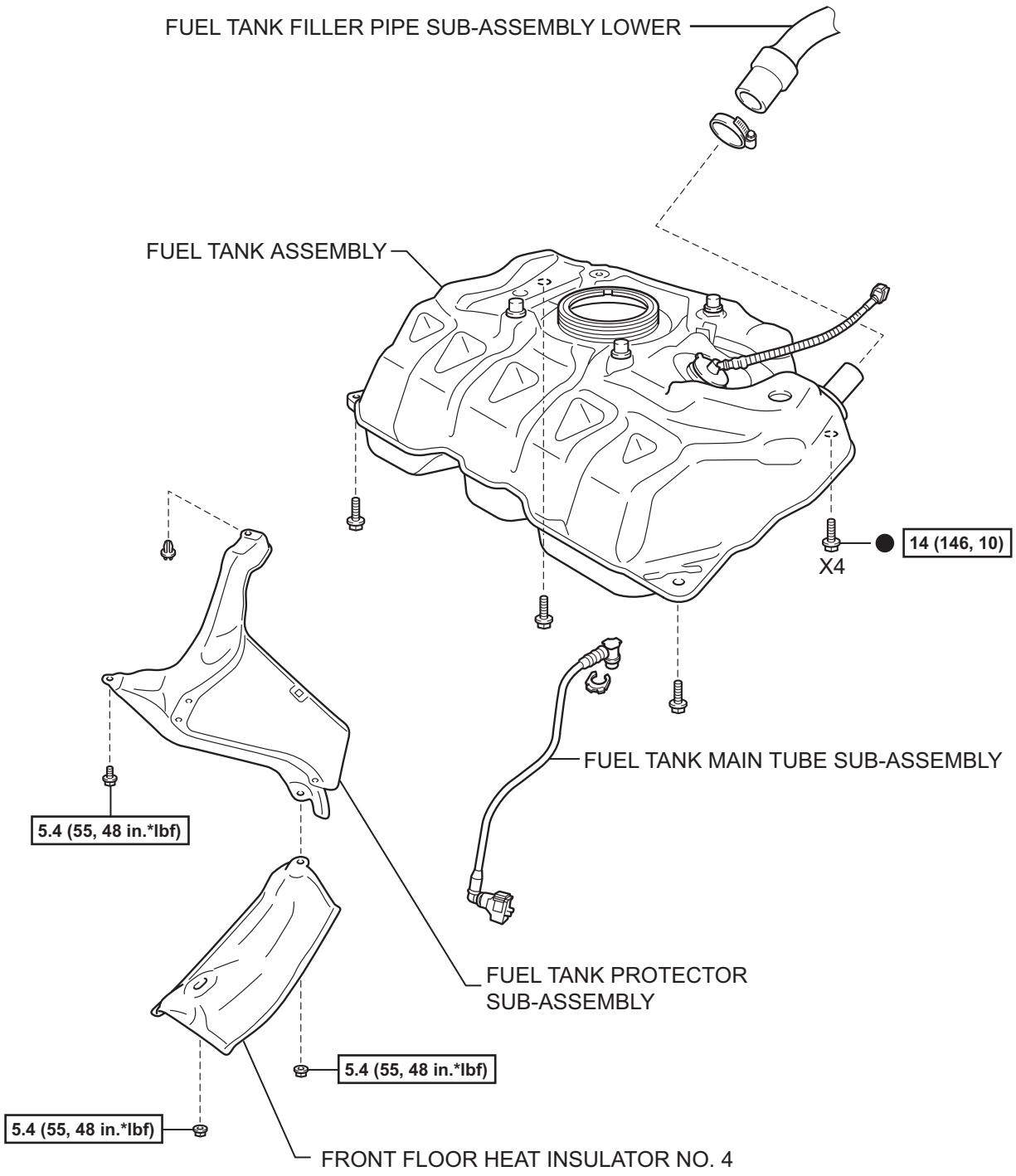

N*m (kgf*cm, ft.*lbf) : Specified torque ● Non-reusable part

N

A117806E01

REMOVAL

NOTICE:
Always use "Torx" socket wrench E10 when removing the rear seat.

1. **REMOVE REAR SEAT CUSHION COVER PAD (for Hatchback) (See page SE-114)**
2. **REMOVE REAR SEAT CUSHION COVER PAD (for Sedan) (See page SE-46)**
3. **REMOVE PACKAGE TRAY TRIM PANEL ASSEMBLY (for Hatchback) (See page IR-48)**
4. **REMOVE DECK BOARD SUB-ASSEMBLY (for Hatchback) (See page IR-48)**
5. **REMOVE DECK FLOOR BOX (for Hatchback) (See page SE-70)**
6. **REMOVE REAR SEAT LEG COVER NO. 1 (for Hatchback) (See page SE-70)**
7. **REMOVE REAR SEAT LEG COVER NO. 2 (for Hatchback) (See page SE-70)**
8. **REMOVE REAR SEAT ASSEMBLY (for Hatchback) (See page SE-71)**
9. **REMOVE REAR FLOOR SERVICE HOLE COVER (See page FU-26)**
10. **DISCHARGE FUEL SYSTEM PRESSURE**
    (See page FU-1)
11. **DISCONNECT CABLE FROM NEGATIVE BATTERY TERMINAL**
12. **DISCONNECT FUEL TANK MAIN TUBE SUB-ASSEMBLY (See page FU-27)**
13. **DISCONNECT FUEL TANK VENT HOSE SUB-ASSEMBLY (See page FU-27)**
14. **REMOVE FUEL PUMP GAUGE RETAINER (See page FU-27)**
15. **REMOVE FUEL SUCTION WITH PUMP AND GAUGE TUBE ASSEMBLY (See page FU-27)**
16. **DRAIN FUEL**
17. **REMOVE FRONT FLOOR HEAT INSULATOR NO. 4**
    (a) Remove the 2 nuts together with the insulator.

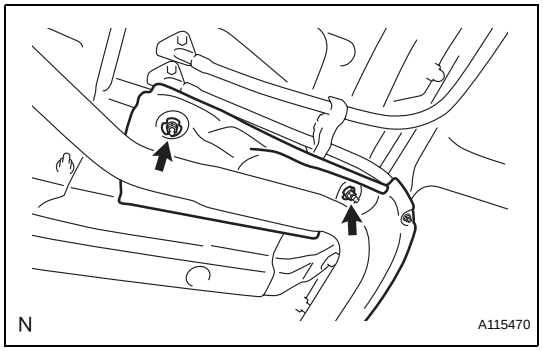

FU

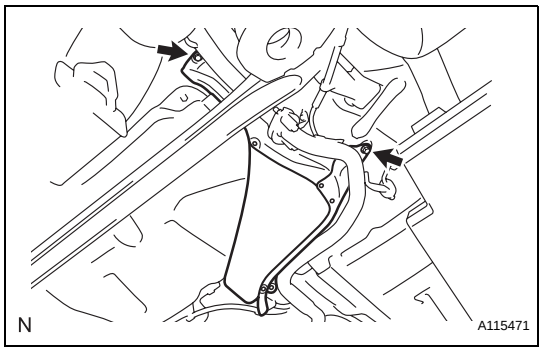

18. REMOVE FUEL TANK PROTECTOR SUB-ASSEMBLY

(a) Remove the bolt together with the clip.

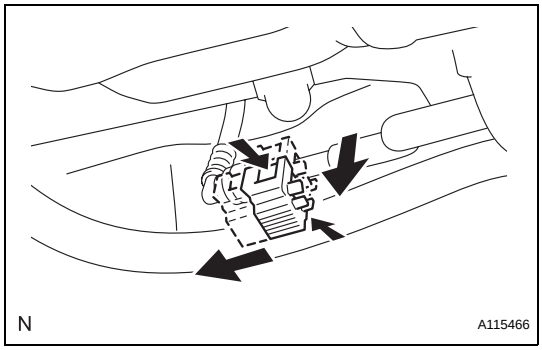

19. DISCONNECT FUEL TANK MAIN TUBE SUB-ASSEMBLY

(a) Release the lock as shown in the illustration, then pull and remove the fuel tank main tube.

NOTICE:

- **Remove any dirt and foreign matter from the clip before performing this work.**
- **Avoid any scratches or foreign matter on the parts when disconnecting them, as the quick connector has the O-ring that seals the plug.**
- **Perform this work by hand. Do not use any tools.**
- **Do not forcibly bend, twist or turn the nylon tube.**
- **Protect the disconnected parts by covering them with a plastic bag.**
- **If the connector and pipe are stuck, disconnect the nylon tube by turning it by hand to release them.**

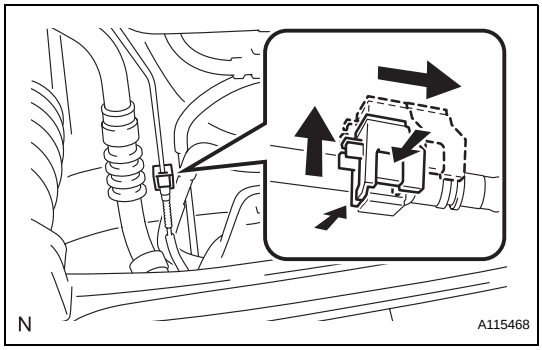

20. DISCONNECT FUEL TANK BREATHER HOSE

(a) Release the lock as shown in the illustration, then pull and remove the fuel tank breather hose.

NOTICE:

- **Remove any dirt and foreign matter from the clip before performing this work.**
- **Avoid any scratches or foreign matter on the parts when disconnecting, as the quick connector has the O-ring that seals the plug.**
- **Perform this work by hand. Do not use any tools.**
- **Do not forcibly bend, twist or turn the nylon tube.**
- **Protect the disconnected parts by covering them with a plastic bag.**
- **If the connector and pipe are stuck, disconnect the nylon tube by turning it by hand to release them.**

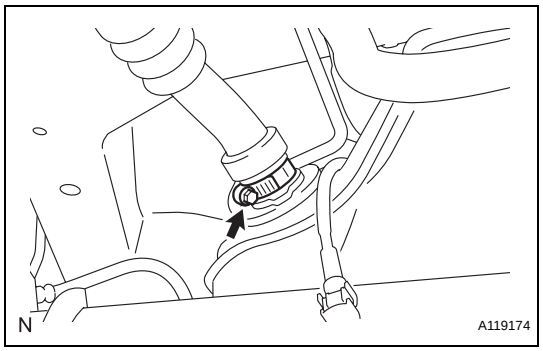

21. DISCONNECT FUEL TANK FILLER PIPE SUB-ASSEMBLY LOWER

(a) Loosen the clamp and disconnect the fuel tank filler pipe.

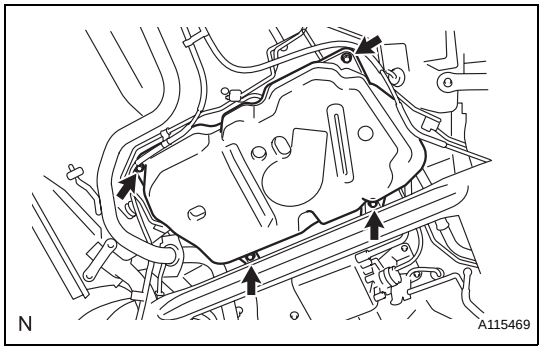

22. REMOVE FUEL TANK ASSEMBLY

(a) Remove the 4 bolts and remove the fuel tank.

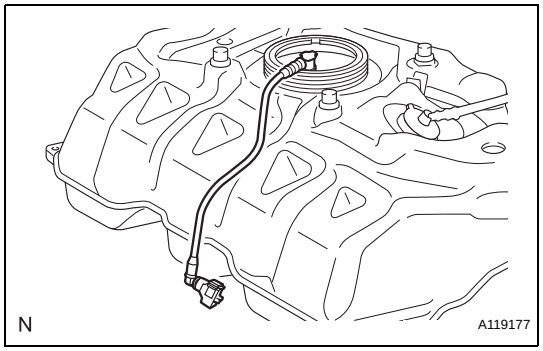

(b) Remove the fuel tank main tube from the fuel tank.

INSTALLATION

NOTICE:
Always use "Torx" socket wrench E10 when removing the rear seat.

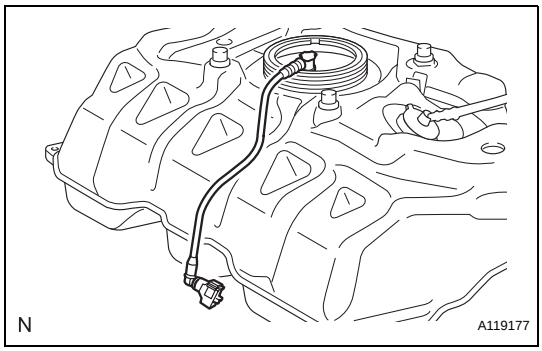

1. INSTALL FUEL TANK ASSEMBLY

(a) Install the fuel tank main tube onto the fuel tank.

(b) Clean the bolt hole and remove any grease.

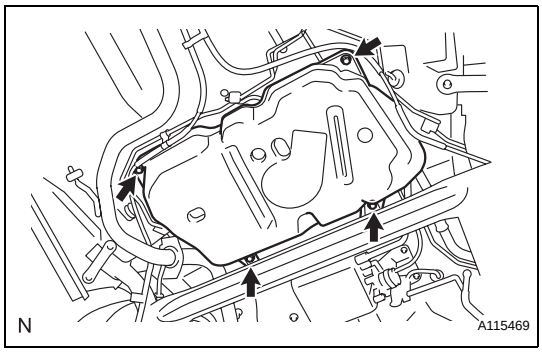

(c) Install the fuel tank with 4 new bolts.
Torque: 14 N*m (146 kgf*cm, 10 ft.*lbf)

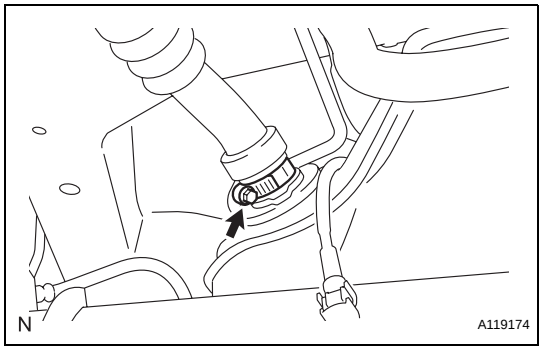

2. CONNECT FUEL TANK FILLER PIPE SUB-ASSEMBLY LOWER

(a) Connect the fuel tank filler pipe and install the clamp.

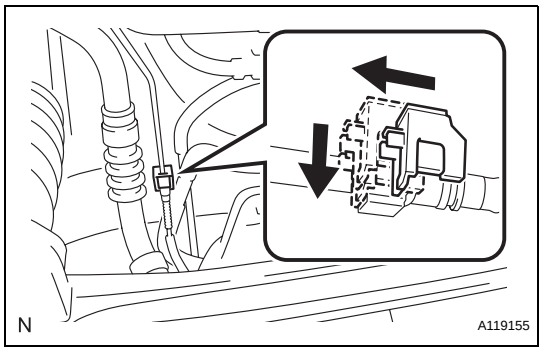

3. CONNECT FUEL TANK BREATHER TUBE

(a) Align the fuel tank breather tube connector with the pipe, push the fuel tube connector in until the retainer makes a click sound, then lock the cover of the connector.

NOTICE:

- **Check that there are no scratches or foreign matter on the disconnected parts of the fuel tank breather tube connector and pipe before performing this work.**
- **After connecting, pull the pipe and fuel tank breather connector to make sure that they are securely connected.**

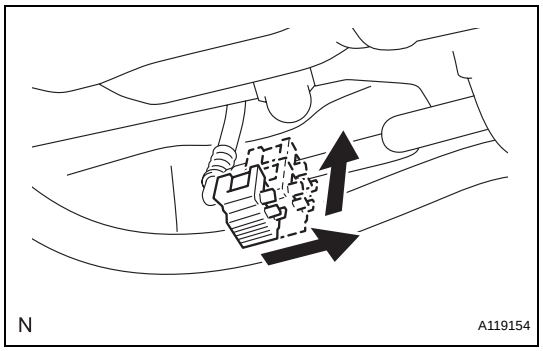

4. CONNECT FUEL TANK MAIN TUBE SUB-ASSEMBLY

(a) Align the fuel tube connector with the pipe, push the fuel tube connector in until the retainer makes a click sound, then lock the cover of the connector.

NOTICE:

- **Check that there are no scratches or foreign matter on the disconnected parts of the fuel tube connector and pipe before performing this work.**
- **After connecting, pull the pipe and fuel tube connector to make sure that they are securely connected.**

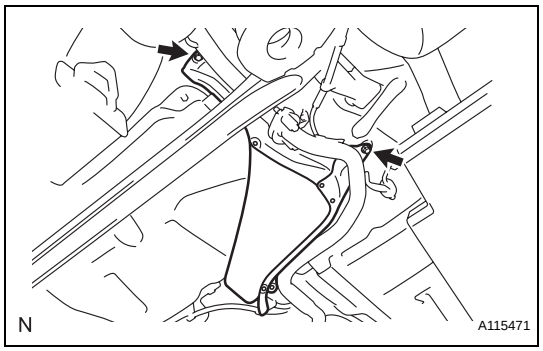

5. INSTALL FUEL TANK PROTECTOR SUB-ASSEMBLY

(a) Install the fuel tank protector sub-assembly with the bolt and clip.

Torque: 5.4 N*m (55 kgf*cm, 48 in.*lbf)

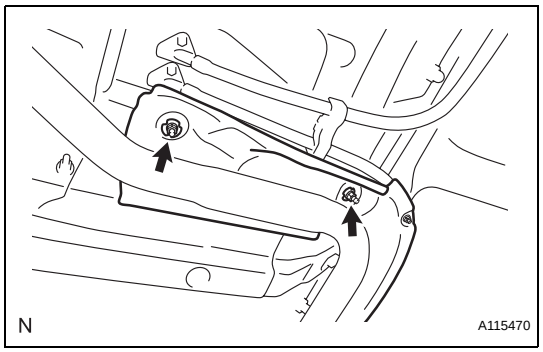

6. INSTALL FRONT FLOOR HEAT INSULATOR NO. 4

(a) Install the 2 nuts.

Torque: 5.4 N*m (55 kgf*cm, 48 in.*lbf)

7. INSTALL FUEL SUCTION WITH PUMP AND GAUGE TUBE ASSEMBLY (See page FU-33)

8. INSTALL FUEL PUMP GAUGE RETAINER (See page FU-33)

9. CONNECT FUEL TANK VENT HOSE SUB-ASSEMBLY (See page FU-33)

10. CONNECT FUEL TANK MAIN TUBE SUB-ASSEMBLY (See page FU-34)

11. CONNECT REAR FLOOR SERVICE HOLE COVER (See page FU-34)

12. INSTALL REAR SEAT ASSEMBLY (for Hatchback) (See page SE-84)

13. INSTALL REAR SEAT LEG COVER NO. 2 (for Hatchback) (See page SE-85)

14. INSTALL REAR SEAT LEG COVER NO. 1 (for Hatchback) (See page SE-85)

15. INSTALL DECK FLOOR BOX (for Hatchback) (See page SE-85)

16. INSTALL DECK BOARD SUB-ASSEMBLY (for Hatchback) (See page IR-83)

17. INSTALL PACKAGE TRAY TRIM PANEL ASSEMBLY (for Hatchback) (See page IR-83)

18. **INSTALL REAR SEAT CUSHION COVER PAD (for Sedan) (See page SE-53)**
19. **INSTALL REAR SEAT CUSHION COVER PAD (for Hatchback) (See page SE-123)**
20. **ADD FUEL**
21. **CONNECT CABLE TO NEGATIVE BATTERY TERMINAL**
    Torque: 5.4 N*m (55 kgf*cm, 48 in.*lbf)
22. **CHECK FOR FUEL LEAKAGE (See page FU-7)**