AIR CONDITIONING SYSTEM

551AE–01

PRECAUTION

CAUTION:

Because the compressor has a high–voltage circuit, wear insulated gloves and pull out the service plug to cut the high–voltage circuit before inspection.

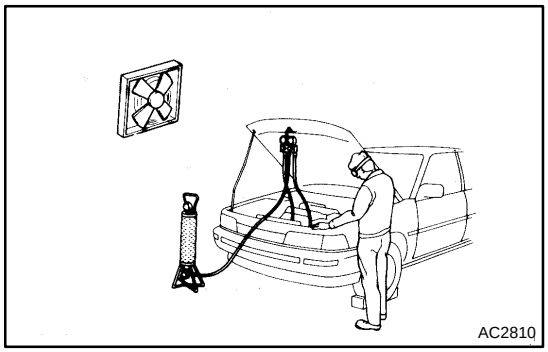

1. **DO NOT HANDLE REFRIGERANT IN AN ENCLOSED AREA OR NEAR AN OPEN FLAME**
2. **ALWAYS WEAR EYE PROTECTION**

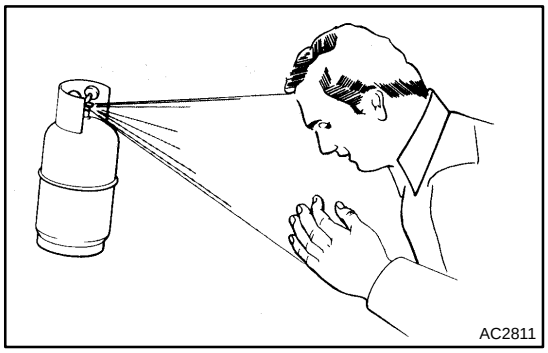

3. **BE CAREFUL NOT TO GET LIQUID REFRIGERANT IN YOUR EYES OR ON YOUR SKIN**

If liquid refrigerant gets in your eyes or on your skin:

(a) wash the area with lots of cold water.

CAUTION:

Do not rub your eyes or skin.

(b) apply clean petroleum jelly to the skin.

(c) go immediately to a hospital or see a physician for professional treatment.

4. **NEVER HEAT CONTAINER OR EXPOSE IT TO NAKED FLAME**
5. **BE CAREFUL NOT TO DROP CONTAINER OR APPLY PHYSICAL SHOCKS TO IT**

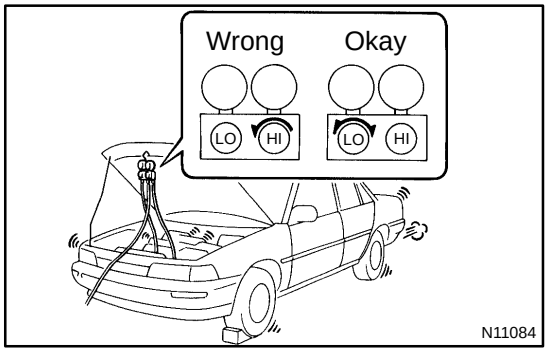

6. **DO NOT OPERATE COMPRESSOR WITHOUT ENOUGH REFRIGERANT IN REFRIGERANT SYSTEM**

If there is not enough refrigerant in the refrigerant system, oil lubrication will be insufficient and compressor burnout may occur. Necessary care should be taken to avoid this.

7. **DO NOT OPEN HIGH PRESSURE MANIFOLD VALVE WHILE COMPRESSOR IS OPERATING**

Open and close only the low pressure valve. If the high pressure valves are opened, refrigerant flows in the reverse direction causing the charging cylinder to rupture.

8. **BE CAREFUL NOT TO OVERCHARGE SYSTEM WITH REFRIGERANT**

If refrigerant is overcharged, it causes problems such as insufficient cooling, poor fuel economy, engine overheating, etc.

cardiagn.com

9. NOTICE FOR INITIALIZATION:

(a) **When disconnecting the negative (–) battery terminal, initialize the following systems after the terminal is reconnected.**

System Name	see page
Power Window Control System	01–28

10. NOTICES FOR HYBRID SYSTEM ACTIVATION:

★ **When the warning lamp is illuminated or the battery has been disconnected and reconnected, pressing the power switch may not start the system on the first try. If so, press the power switch again.**

★ **With the power switch's power mode changed to ON (IG), disconnect the battery. If the key is not in the key slot during reconnection, DTC B2799 may be output.**

11. PRECAUTIONS TO BE OBSERVED WHILE SERVICING

NOTICE:

★ **For the electric inverter compressor, use the ND–OIL11.**

★ **Electrical insulation performance may decrease significantly if even a small amount of oil other than ND–OIL11 is used (or enters) in the refrigeration cycle, causing the DTC to be output.**

★ **If other oil is accidentally used and a DTC is output, collect the compressor oil in the compressor and replace it with ND–OIL11 to increase the ND–OIL11 ratio amount.**

★ **Replace the main components (evaporator, condenser, and compressor) if a large amount of oil other than ND–OIL11 enters the system. Failing to do so may cause electrical insulation performance to remain low, causing the DTC to be output.**

CAUTION:

Wear insulated gloves and pull out the service plug clip before inspection, as some of the procedures require disconnecting the high–voltage connectors (see page 05–1339).

cardiagn.com

551AF–01

LOCATION

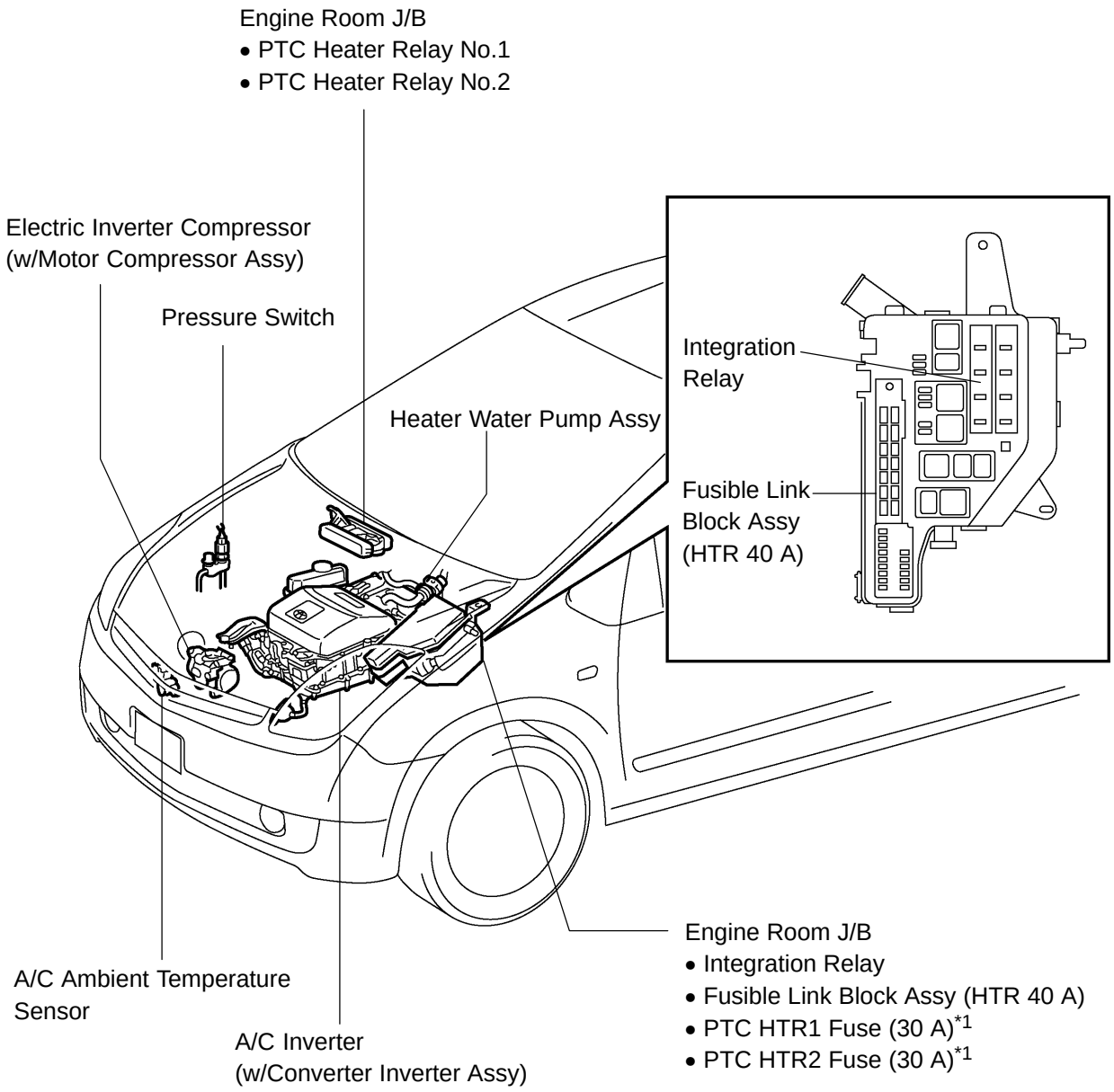

*1: Cold Area Models

C

I36307

cardiagn.com

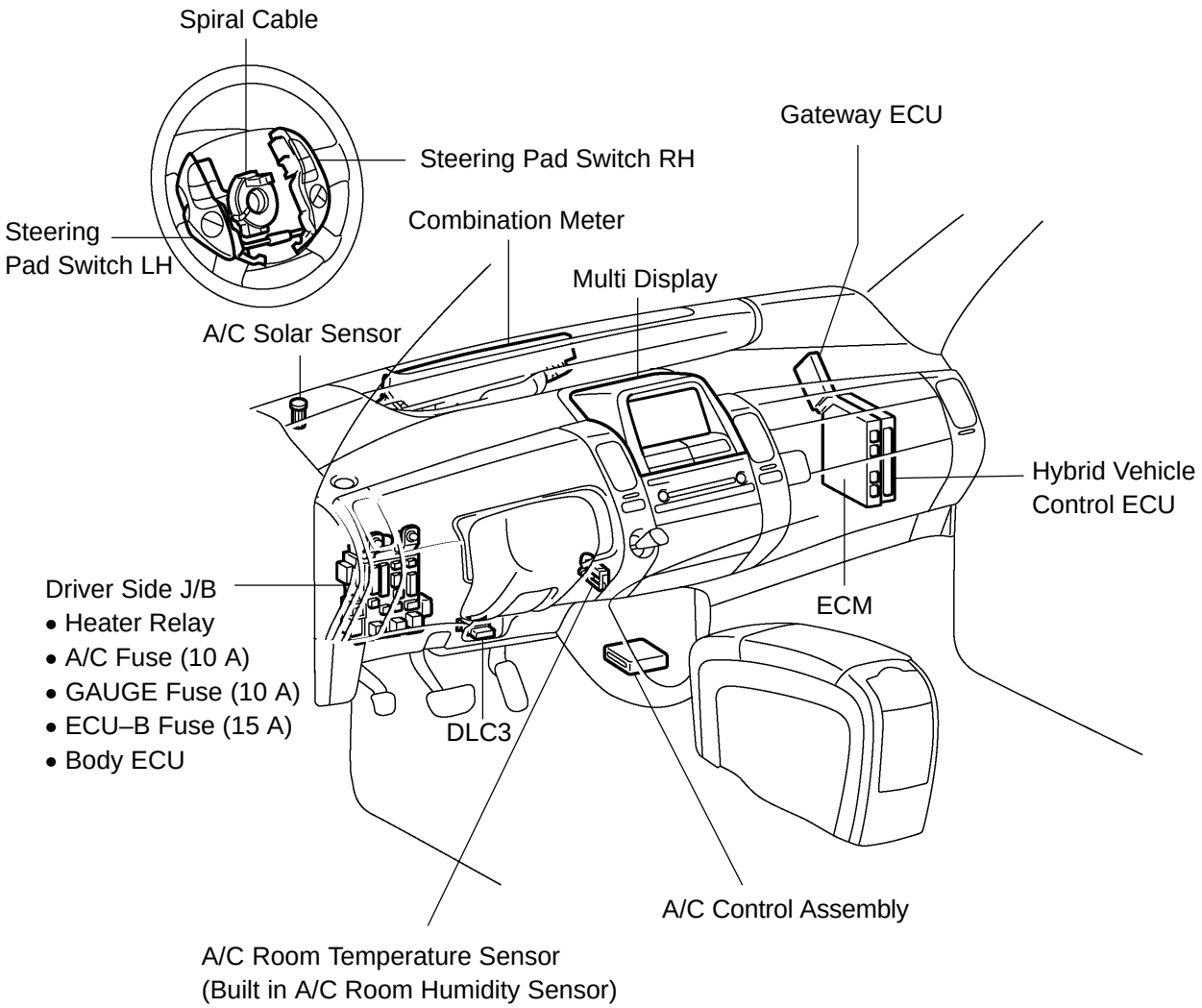

C

I36308

cardiagn.com

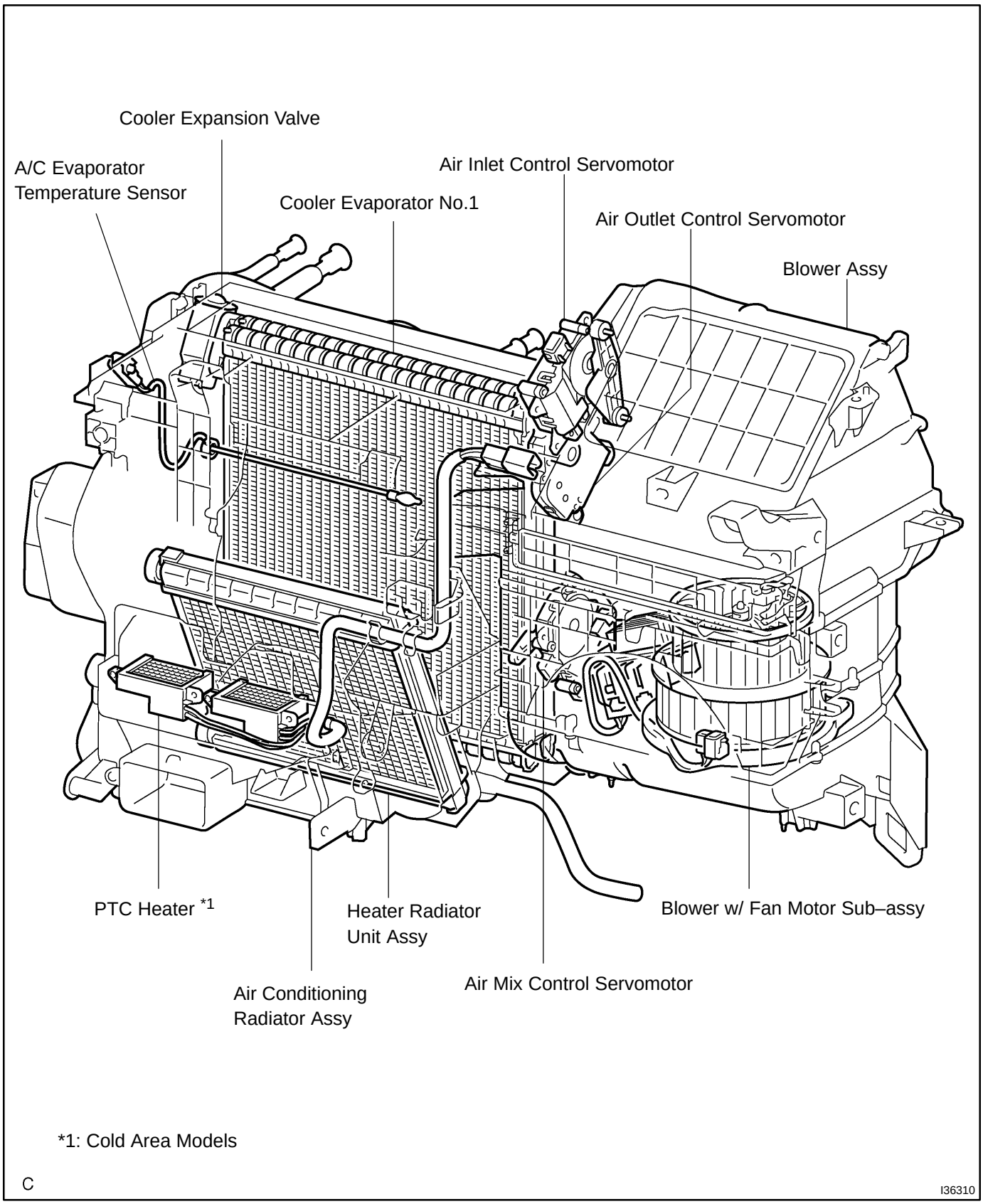

cardiagn.com

REFRIGERANT

ON–VEHICLE INSPECTION

5519C–01

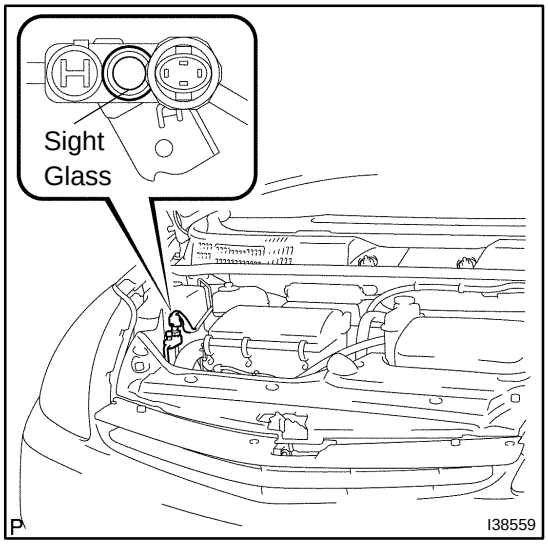

1. INSPECT REFRIGERANT VOLUME

(a) Check the sight glass of the cooler unit refrigerant liquid pipe E.

(1) Set the vehicle according to the conditions below.

Item	Condition
All Doors	Fully open
Temperature setting	MAX COLD
Blower Speed	HI
A/C	ON

(2) Check the sight glass under these conditions.

Item	Symptom	Amount of refrigerant	Corrective Actions
1	Bubbles exist	Insufficient*	(1) Check for gas leakage and repair if necessary (2) Add refrigerant until bubbles disappear
2	No bubbles exist (DTC 76 is output)	Empty, insufficient or excessive	Refer to 3 and 4
3	No temperature difference between compressor inlet and outlet	Empty or nearly empty	(1) Check for gas leakage and repair if necessary (2) Add refrigerant until bubbles disappear
4	Considerable temperature difference between compressor inlet and outlet	Proper or excessive	Refer to 5 and 6
5	Immediately after air conditioning is turned off, refrigerant remains clear	Excessive	(1) Discharge refrigerant (2) Remove air and supply proper amount of purified refrigerant
6	Immediately after air conditioning is turned off, refrigerant foams and then becomes clear	Proper	–

*: Bubbles in the sight glass with room temperature higher than usual can be considered normal if cooling is sufficient.

cardiagn.com

2. INSPECT REFRIGERANT PRESSURE WITH MANIFOLD GAUGE SET

(a) This is a method in which the trouble is located by using a manifold gauge set. Read the manifold gauge pressure when these conditions are established.

Test conditions:

- ★ Temperature at the air inlet with the switch set at RECIRC is 30 to 35˚C (86 to 95˚F)
- ★ Blower speed control switch at ”HI” position
- ★ Temperature control switch at ”MAX COOLD” position
- ★ A/C switch ON
- ★ Fully open doors

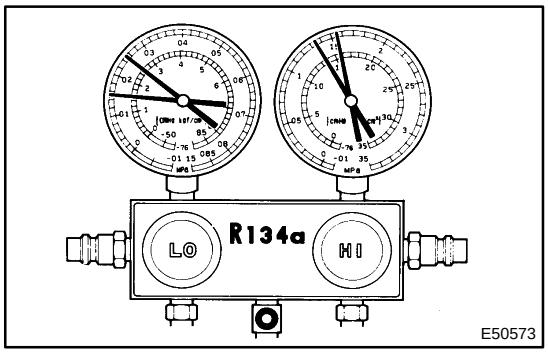

(1) The refrigeration system functions normally

Gauge reading:

Low pressure side:

0.15 to 0.25 MPa (1.5 to 2.5 kgf/cm^2)

High pressure side:

1.37 to 1.57 MPa (14 to 16 kgf/cm^2)

(2) Moisture present in refrigeration system

Condition: Periodically cools and then fails to cool

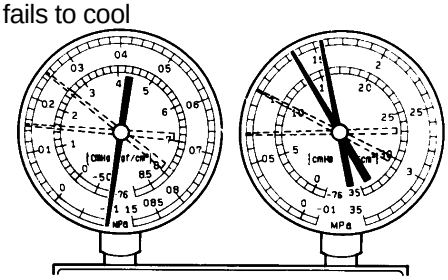

Symptom	Probable cause	Diagnosis	Corrective Actions
During operation, pressure on low pressure side cycles between normal and vacuum	Moisture in refrigerating system freezes at expansion valve orifice, causing a temporary stop of cycle. However, when it melts, normal state is restored.	★Cooler dryer in oversaturated state ★Moisture in refrigeration system freezes at expansion valve orifice and blocks circulation of refrigerant	(1) Replace cooler dryer (2) Remove moisture in cycle by repeatedly evacuating air (3) Supply proper amount of new refrigerant

cardiagn.com

(3) Insufficient cooling

Condition: Cooling system does not function effectively.

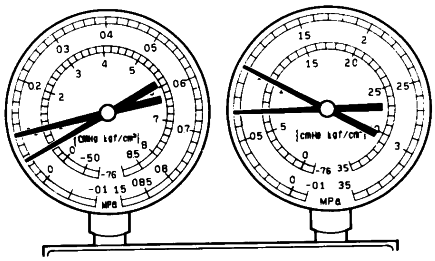

I22118

Symptom	Probable cause	Diagnosis	Corrective Actions
★Pressure is low on both low and high pressure sides ★Bubbles are continuously seen through sight glass ★Insufficient cooling performance	Gas leakage in refrigeration system	★Insufficient refrigerant ★Refrigerant leaking	(1) Check for gas leakage and repair if necessary (2) Supply proper amount of new refrigerant (3) If the indicated pressure value is close to 0 when connected to the gauge, create a vacuum after inspecting and repairing location of leakage

(4) Poor circulation of refrigerant

Condition: Cooling system does not function effectively.

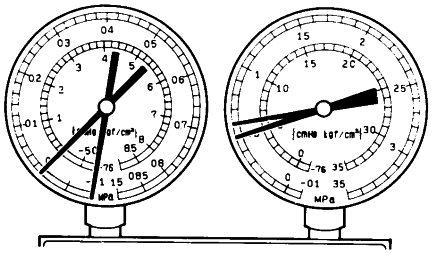

I22119

Symptom	Probable cause	Diagnosis	Corrective Action
★Pressure is low on both low and high pressure sides ★Frost exists on pipe from cooler condenser to A/C unit	Refrigerant flow is obstructed by dirt in cooler condenser core	Cooler condenser core is clogged	Replace cooler condenser core

cardiagn.com

(5) Refrigerant does not circulate

Condition: Cooling system does not function (sometimes it may function).

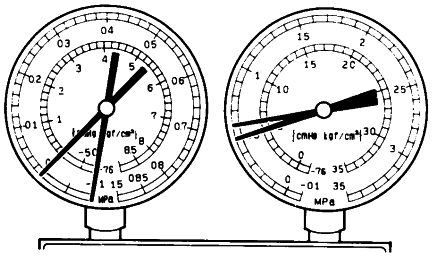

I22120

Symptom	Probable cause	Diagnosis	Corrective Actions
★Vacuum is indicated on low pressure side and very low pressure is indicated on high pressure side ★Frost or condensation is seen on piping on both sides of cooler condenser core or expansion valve	★Refrigerant flow is obstructed by moisture or dirt in refrigeration system ★Refrigerant flow obstructed by gas leaked from cooler expansion valve	Refrigerant does not circulate	(1) Check cooler expansion valve (2) Clean out dirt in cooler expansion valve by blowing air (3) Replace cooler condenser core (4) Evacuate and charge new refrigerant (5) For gas leakage from cooler expansion valve, replace cooler expansion valve

(6) Refrigerant overcharged or insufficient cooling of condenser

Condition: Cooling system does not function effectively.

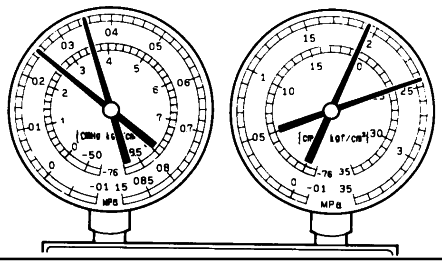

I22121

Symptom	Probable cause	Diagnosis	Correcyive Actions
★Pressure is too high on both low and high pressure sides ★No air bubbles are seen through the sight glass when compressor speed decreases	★Excessive refrigerant ★Insufficient cooling of cooler condenser core	★Excessive refrigerant in cycle→excessive refrigerant is supplied ★Insufficienr cooling of cooler condenser core	(1) Clean cooler condenser core fin (2) Check cooling fan with condenser fan motor operation (3) If (1) and (2) are normal, check amount of refrigerant and supply proper amount of refrigerant

cardiagn.com

(7) Air present in refrigeration system

Condition: Cooling system does not function.

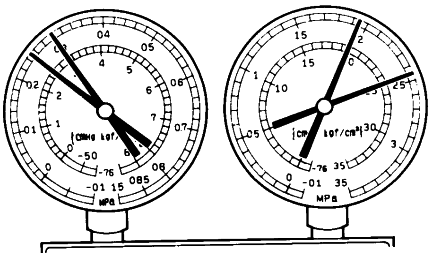

NOTE : These gauge indications occur when the refrigeration system opens and the refrigerant is charged without vacuum purging.

I22122

Symptom	Probable cause	Diagnosis	Corrective Actions
★Pressure is too high on both low and high pressure sides ★Low pressure piping is too hot to touch ★Bubbles are seen through sight glass	Air in system	★Air present in refrigeration system ★Insufficient vacuum purging	(1) Check compressor oil to see if it is dirty or insufficient (2) Evacuate and charge new refrigerant

(8) Expansion valve malfunction

Condition: Insufficient cooling

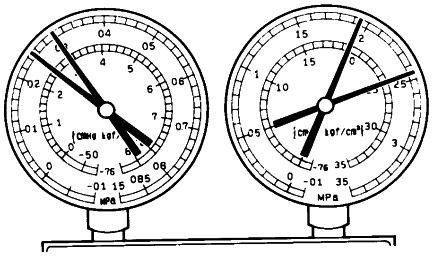

I22123

Symptom	Probable cause	Diagnosis	Corrective Action
★Pressure is too high on both low and high pressure sides ★Frost or large amount of condensation on piping on low pressure side	Trouble in cooler expansion valve	★Excessive refrigerant in low pressure piping ★Cooler expansion valve is opened too wide	Replace cooler expansion valve

cardiagn.com

(9) Defective compression compressor

Condition: Insufficient cooling

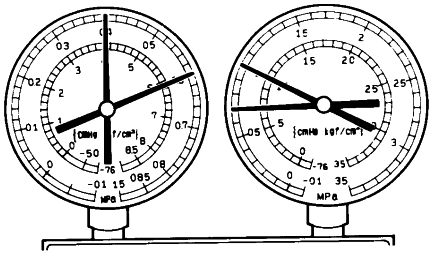

I22124

Symptom	Probable cause	Diagnosis	Corrective Action
★Pressure is too high on both low and high pressure sides ★Pressure is too low on high pressure side	Internal leak in cooler compressor	★Compression failure ★Leakage from damaged valve or sliding parts are broken	Repair or replace cooler compressor

Gauge readings (Reference)

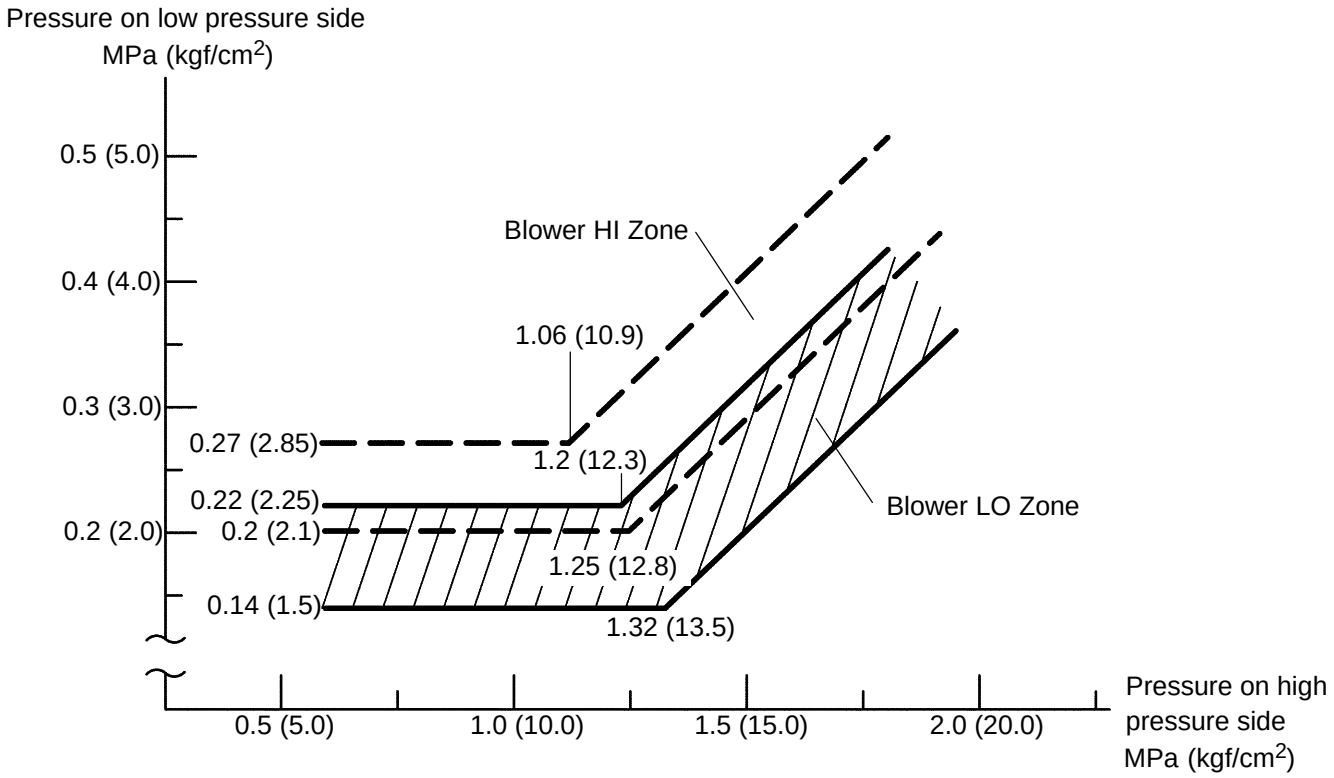

I30081

cardiagn.com

5519D–01

REPLACEMENT

1. DISCHARGE REFRIGERANT FROM REFRIGERATION SYSTEM

(a) Turn the A/C switch on.

(b) Operate the A/C with the setting temperature at 25◆C (77◆F) and the blower level at LO for 10 minutes to circulate the refrigerant and collect compressor oil remaining in each component into the cooler compressor as much as possible.

(c) Stop the engine.

(d) Using SST, let the refrigerant gas out.

SST 07110–58060 (07117–58080, 07117–58090, 07117–78050, 07117–88060, 07117–88070, 07117–88080)

2. CHARGE REFRIGERANT

(a) Perform vacuum purging using a vacuum pump.

(b) Charge refrigerant HFC–134a (R134a).

Standard: 450 ± 30 g (15.9 ± 1.1 oz.)

SST 07110–58060 (07117–58060, 07117–58070, 07117–58080, 07117–58090, 07117–78050, 07117–88060, 07117–88070, 07117–88080)

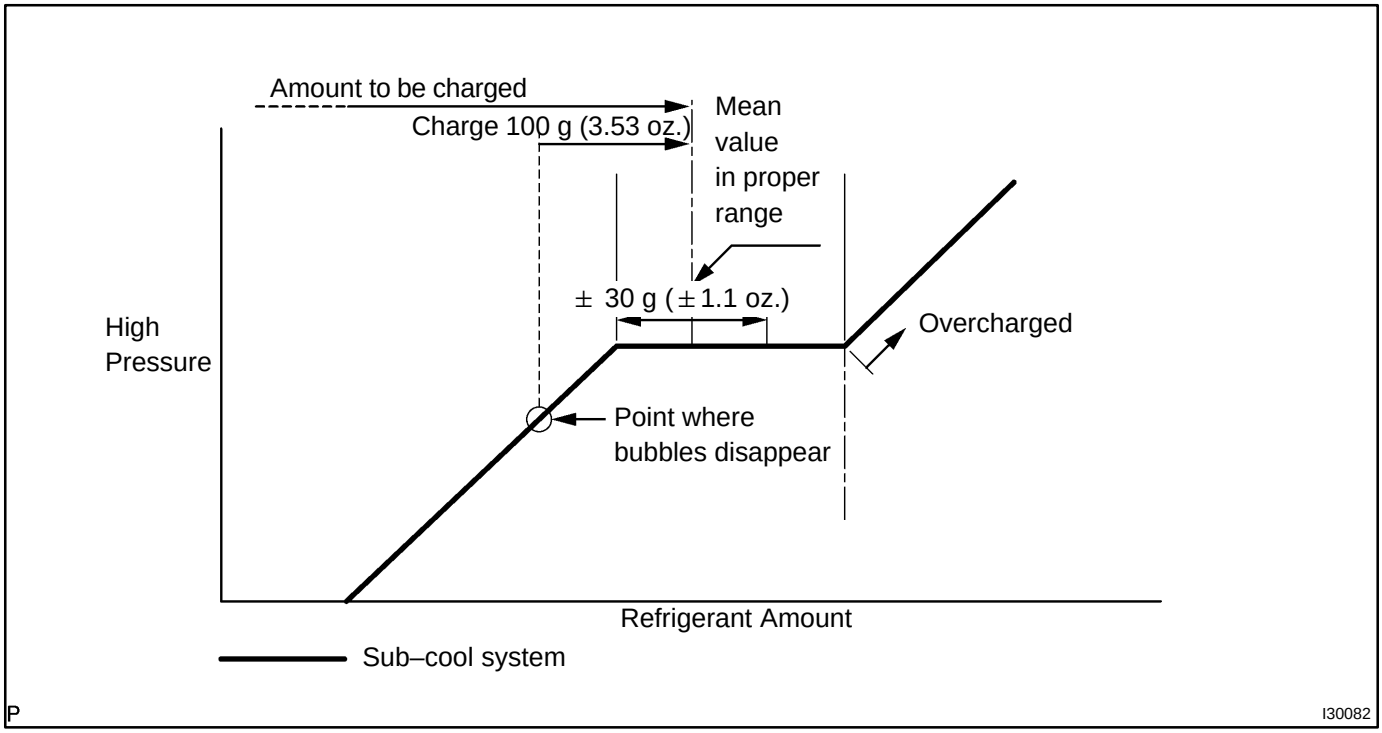

NOTICE:

★ **Do not turn the A/C on before charging with refrigerant as the cooler compressor doesn't work properly without any refrigerant, which causes the compressor to overheat.**

★ **Approximately 100 g (3.53 oz.) of refrigerant may need to be charged after bubbles disappear. The refrigerant amount should be checked by quantity, and not with the sight glass.**

HINT:

Prepare a service can to recharge the refrigerant if using the refrigerant gas collected with the freon collection/recycling device because the collective rate of the device is approximately 90 %.

3. WARM UP COMPRESSOR

(a) Turn the A/C switch on continuously for at least 1 minute to warm up the compressor.

NOTICE:

Be sure to warm up compressor when turning the A/C on after removing and installing the cooler refrigerant lines (including the compressor), to prevent damage to the compressor.

cardiagn.com

4. INSPECT LEAKAGE OF REFRIGERANT

(a) After recharging the refrigerant gas, inspect leakage of refrigerant gas using a halogen leak detector.

(b) Perform in these conditions:

★ Power switch off.

★ Secure good ventilation (the gas leak detector may not react to volatile gases which are not refrigerant, such as evaporated gasoline and exhaust gas).

★ Repeat the test 2 or 3 times.

★ Make sure that there is some refrigerant remaining in the refrigeration system.
When compressor is off: approx. 392 to 588 kPa (4 to 6 kgf/cm^2, 57 to 85 psi)

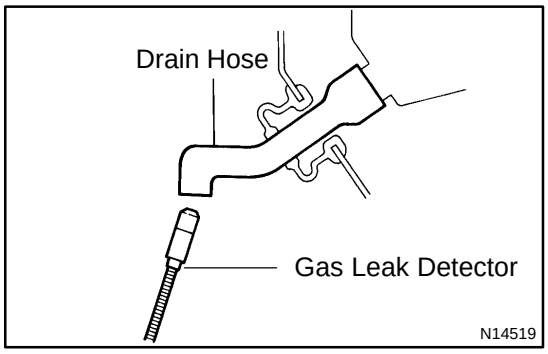

(c) Bring the gas leak detector close to the drain hose with the detector's power off.

HINT:

★ After the blower motor has stopped, leave the cooling unit for more than 15 minutes.

★ Expose the gas leak detector sensor under the drain hose.

★ When bringing the gas leak detector close to the drain hose, make sure that the gas leak detector does not react to the volatile gases.

If such reaction is unavoidable, the vehicle must be lifted up.

(d) If a gas leak is not detected on the drain hose, remove the blower motor control from the cooling unit. Insert the gas leak detector sensor into the unit and perform the test.

(e) Disconnect the connector and leave the pressure switch for approximately 20 minutes. Bring the gas leak detector close to the pressure switch and perform the test.

cardiagn.com

REFRIGERANT LINE

COMPONENTS

5519E–01

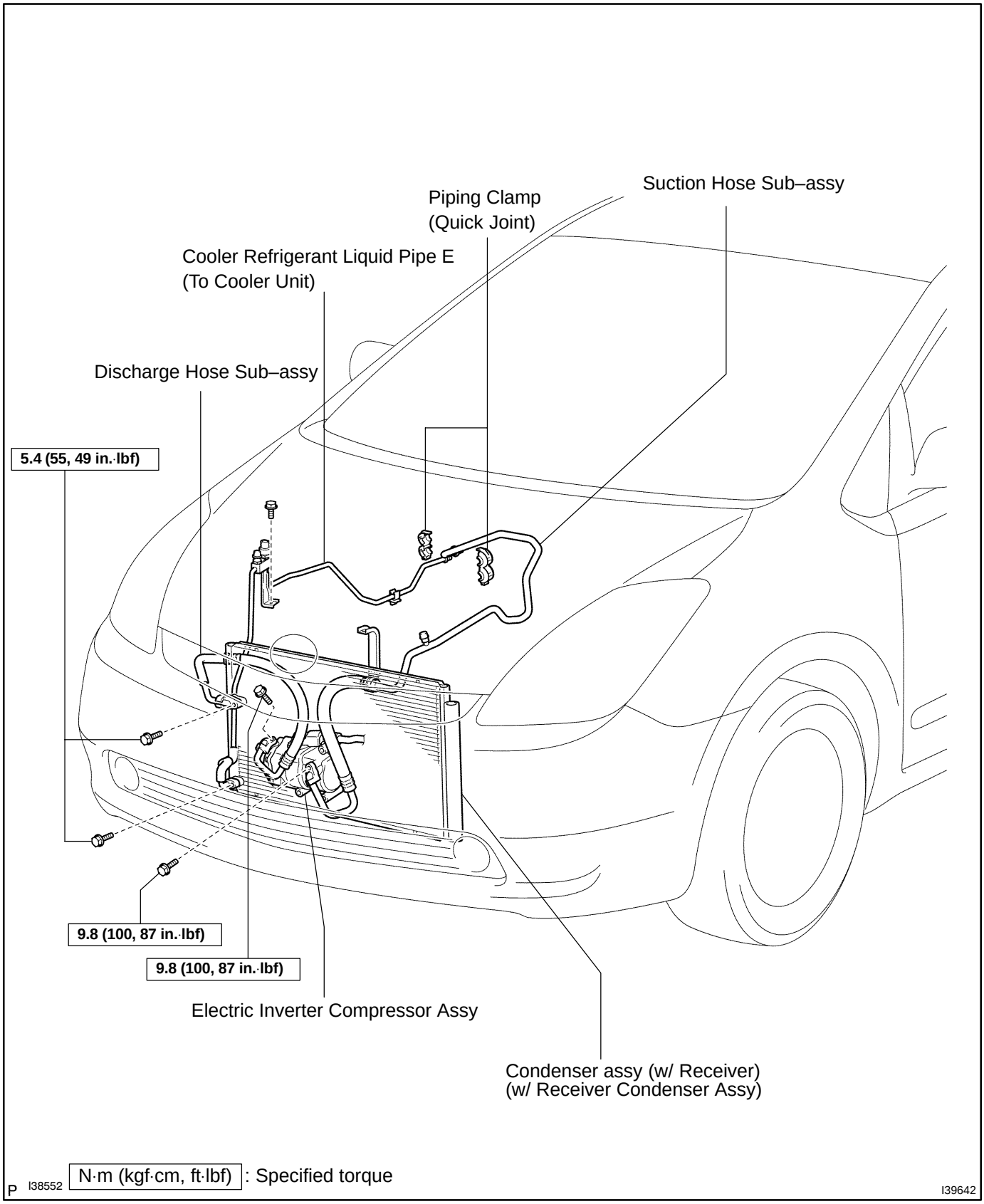

cardiagn.com

AIR CONDITIONING RADIATOR ASSY

COMPONENTS

5519F–01

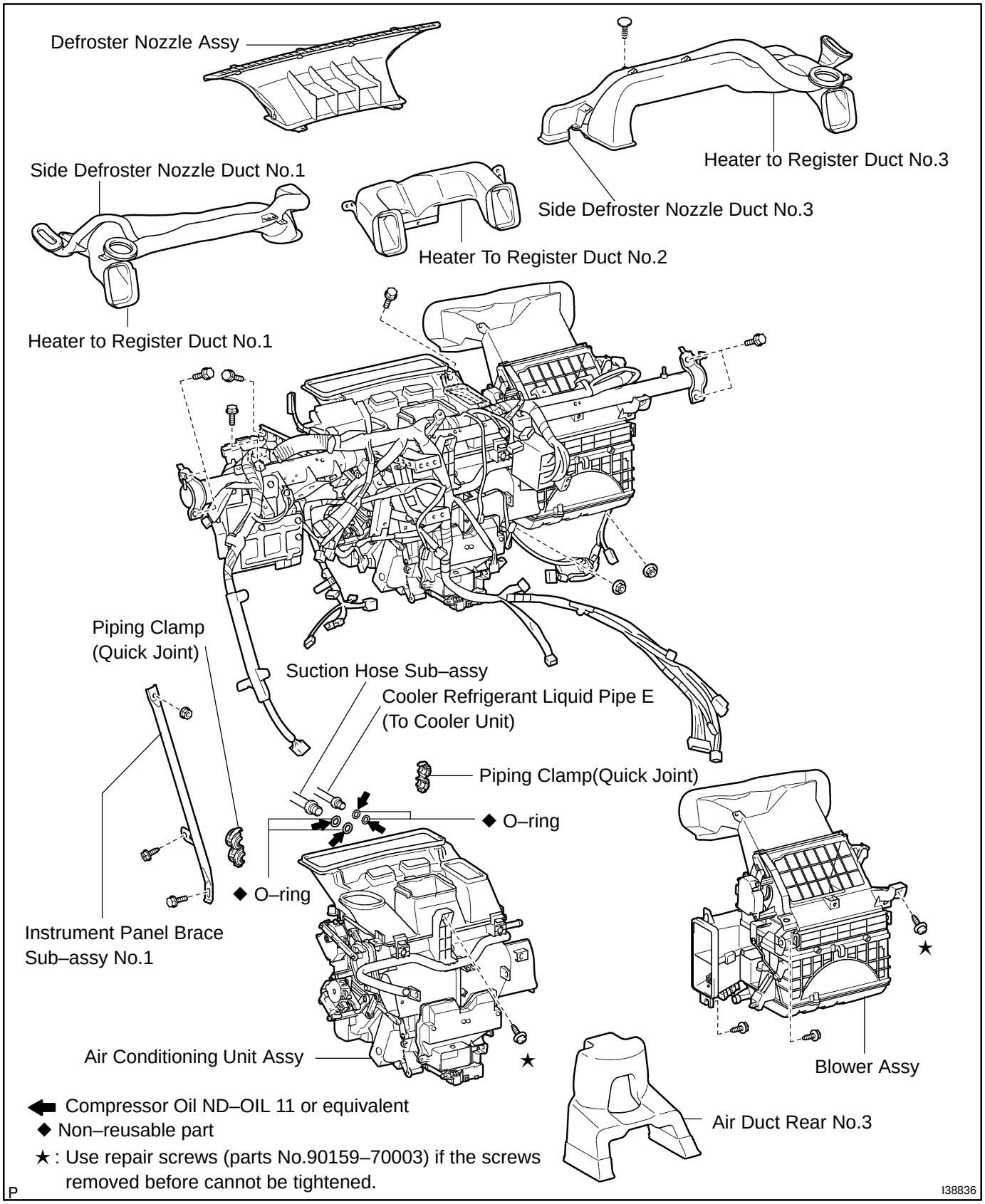

cardiagn.com

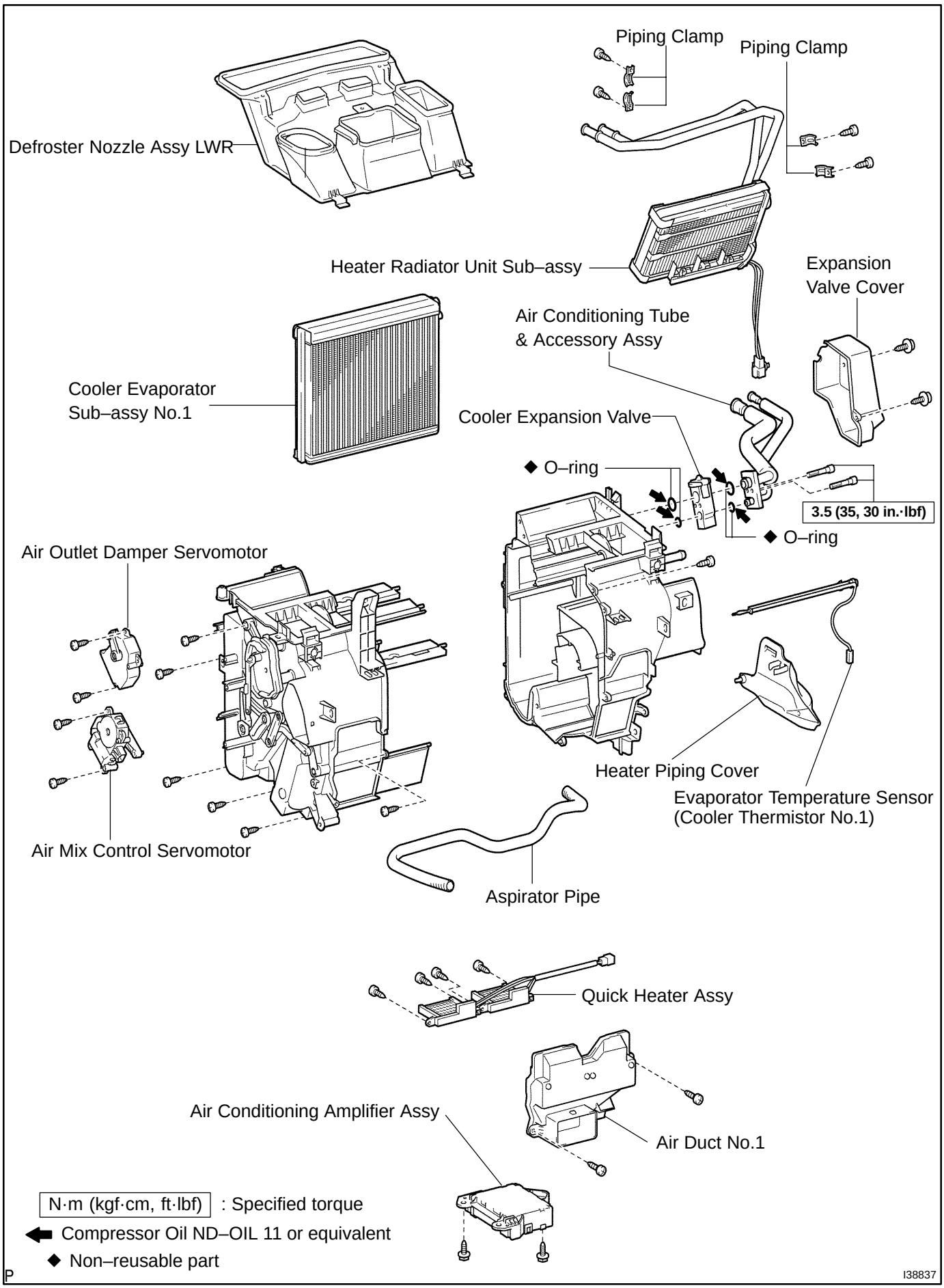

cardiagn.com

5519G–01

OVERHAUL

HINT:

★ Installation is in the reverse order of removal.
★ COMPONENTS for instrument panel safety pad: See page 71–1.
★ COMPONENTS for air conditioner radiator assy: See page 55–15.

1. DISCHARGE REFRIGERANT FROM REFRIGERATION SYSTEM (SEE PAGE 55–12)

SST 07110–58060 (07117–58080, 07117–58090, 07117–78050, 07117–88060, 07117–88070, 07117–88080)

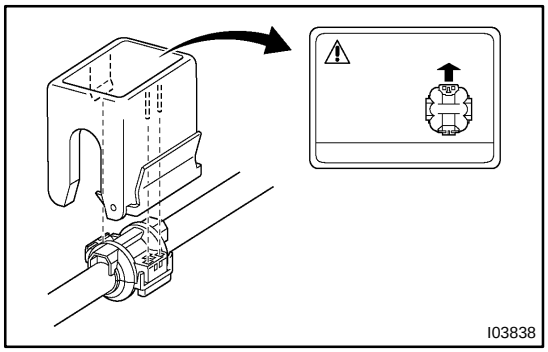

2. DISCONNECT SUCTION HOSE SUB–ASSY

(a) Check the SST installation direction.

SST 09870–00015

HINT:

Set the SST so that the stopper side is on the piping clamp lock side.

(b) Install the SST on the piping clamp.

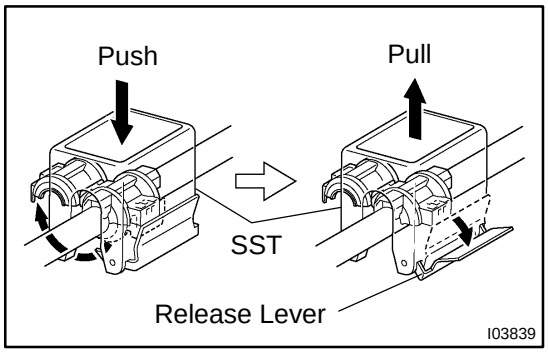

(c) Push down on the SST with your thumb while holding the pipe with both hands.

NOTICE:

Be careful not to bend the pipe.

(d) Pull the SST until the stopper touches the pipe.
(e) Raise the SST stopper and remove the piping clamp with the SST from the pipe.
(f) Remove the piping clamp from the SST.

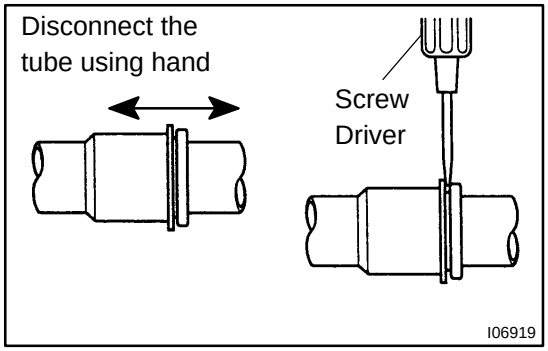

(g) Disconnect the suction hose.
(h) Remove the 2 O–rings from the suction hose.

NOTICE:

★ **Do not apply excessive force to the suction hose.**
★ **Seal the opening of the disconnected part using vinyl tape to prevent moisture and foreign matter from entering.**

3. DISCONNECT COOLER REFRIGERANT LIQUID PIPE E (TO COOLER UNIT)

SST 09870–00025

HINT:

Disconnect the cooler refrigerant liquid pipe E following the same procedures as for the suction hose.

cardiagn.com

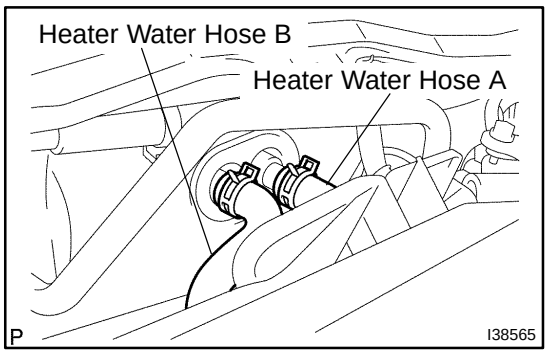

4. DISCONNECT HEATER WATER HOSE B

(a) Slide the clip and disconnect the heater water hose B.

NOTICE:

- ★ **Do not apply excessive force to the water hose B.**
- ★ **Prepare a drain pan or cloth for when the cooling water leaks.**

5. DISCONNECT HEATER WATER HOSE A

(a) Slide the clip and disconnect the heater water hose A.

NOTICE:

- ★ **Do not apply excessive force to the water hose A.**
- ★ **Prepare a drain pan or cloth for when the cooling water leaks.**

6. REMOVE INSTRUMENT PANEL SUB–ASSY W/PASSENGER AIRBAG ASSY (SEE PAGE 71–7)

HINT:

Refer to the removal procedures for the instrument panel with the passenger airbag assy.

7. REMOVE INSTRUMENT PANEL SUB–ASSY LOWER (SEE PAGE 71–13)

HINT:

Refer to the removal procedures for the instrument panel lower.

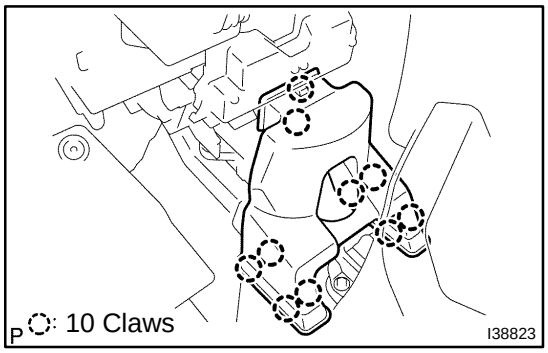

8. REMOVE AIR DUCT REAR NO.3

(a) Fold back the floor carpet.

HINT:

Fold back the floor carpet so that the air duct rear No.3 can be removed.

(b) Disengage the 10 claws and then remove the air duct rear No.3.

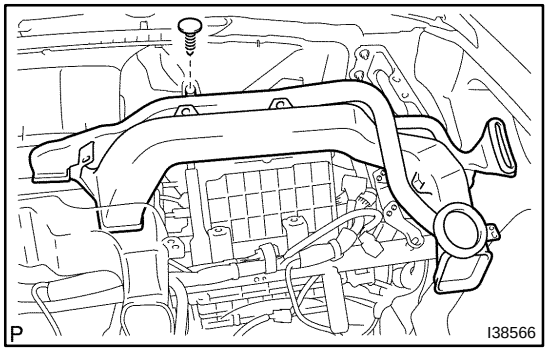

9. REMOVE HEATER TO REGISTER DUCT NO.3

(a) Remove the clip and then the heater to register duct No.3 with the side defroster nozzle duct No.2.

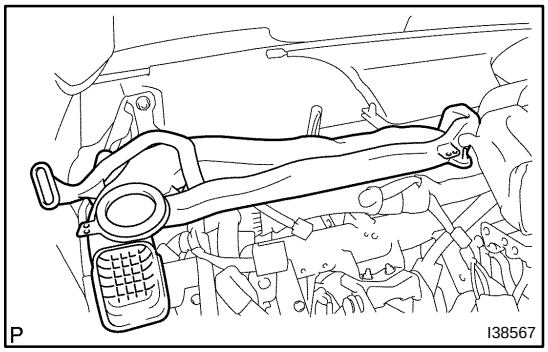

10. REMOVE HEATER TO REGISTER DUCT NO.1

(a) Remove the heater to register duct No.1 with the side defroster nozzle duct No.1.

cardiagn.com

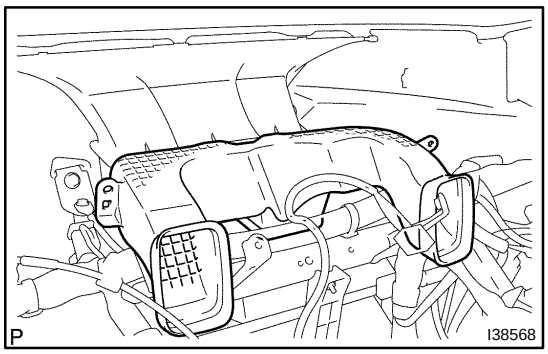

11. REMOVE HEATER TO REGISTER DUCT NO.2

(a) Remove the heater to register duct No.2.

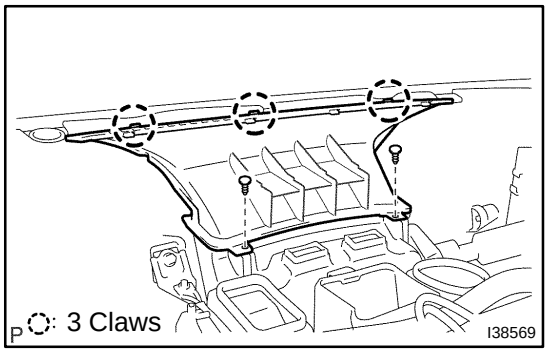

12. REMOVE DEFROSTER NOZZLE ASSY

(a) Remove the 2 clips.

(b) Disengage the 3 claws and then remove the defroster nozzle assy.

13. REMOVE TRANSMISSION CONTROL ECU ASSY

14. REMOVE ECM (SEE PAGE 10–24)

15. REMOVE NETWORK GATEWAY ECU (SEE PAGE 67–26)

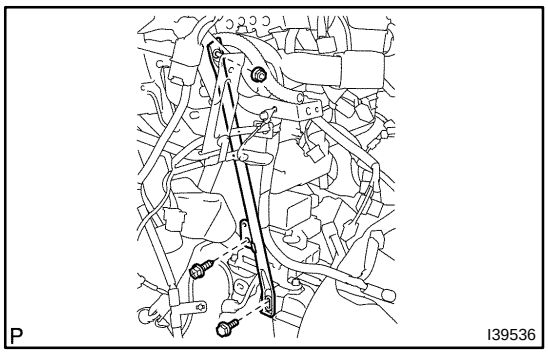

16. REMOVE INSTRUMENT PANEL BRACE SUB–ASSY NO.1

(a) Remove the clamp and disconnect the harness.

(b) Remove the 2 bolts and the nut and then the instrument panel brace sub–assy No.1.

17. REMOVE AIR CONDITIONING AMPLIFIER ASSY (SEE PAGE 55–47)

18. REMOVE STEERING COLUMN ASSY (SEE PAGE 50–8)

cardiagn.com

19. REMOVE INSTRUMENT PANEL REINFORCEMENT ASSY

(a) Disconnect each connector and remove each clamp. Disconnect the wire harness.

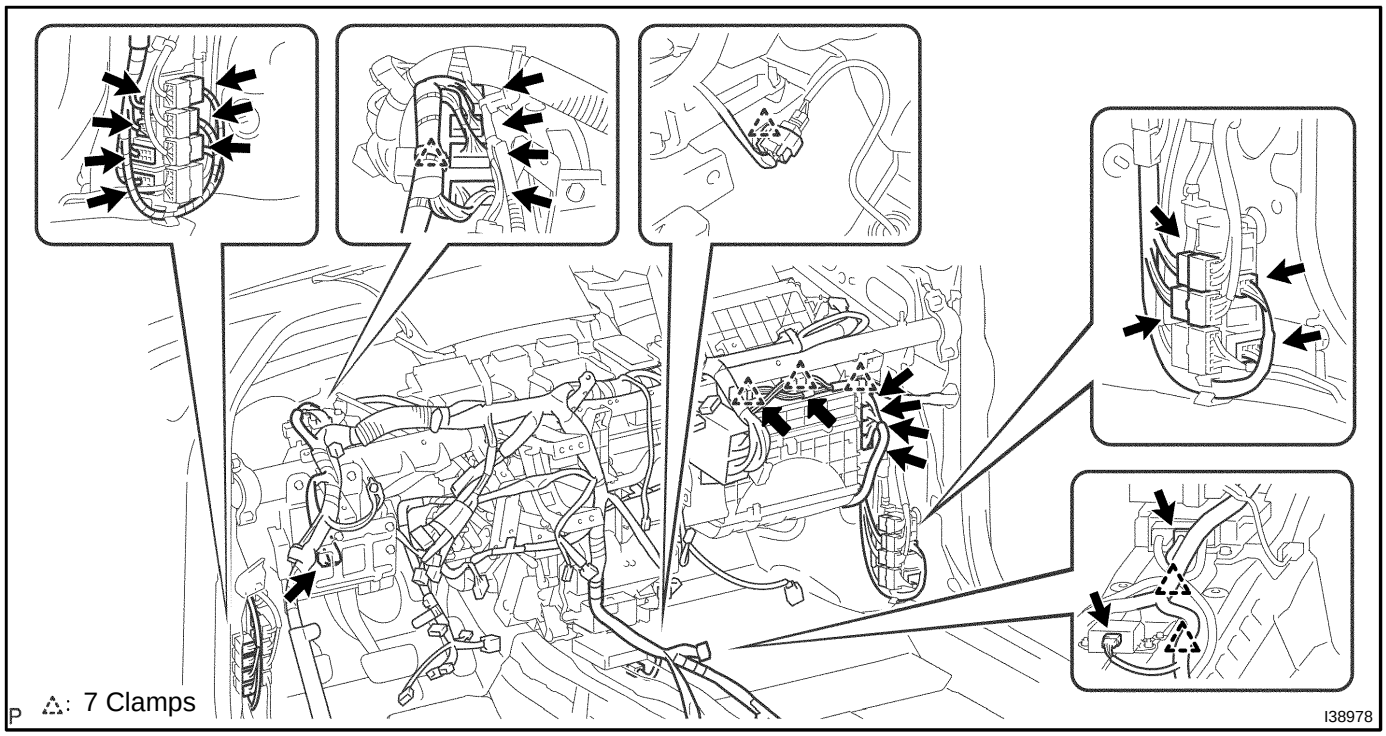

(b) Remove the 7 bolts and the 2 nuts and then the instrument panel reinforcement assy with the air conditioner unit assy.

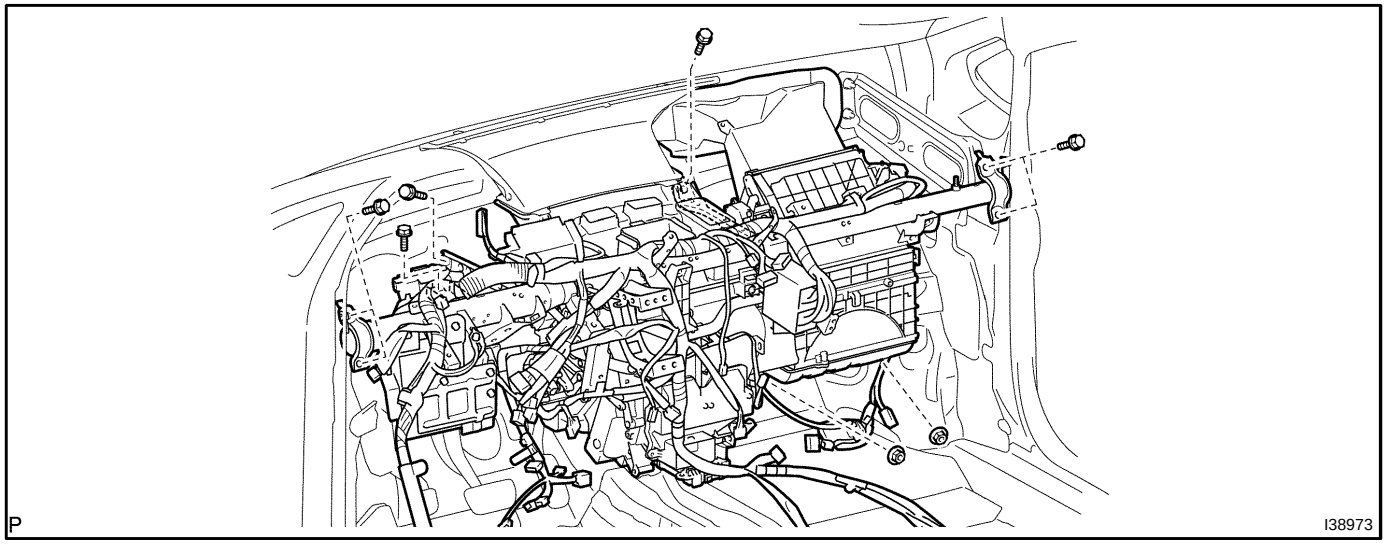

cardiagn.com

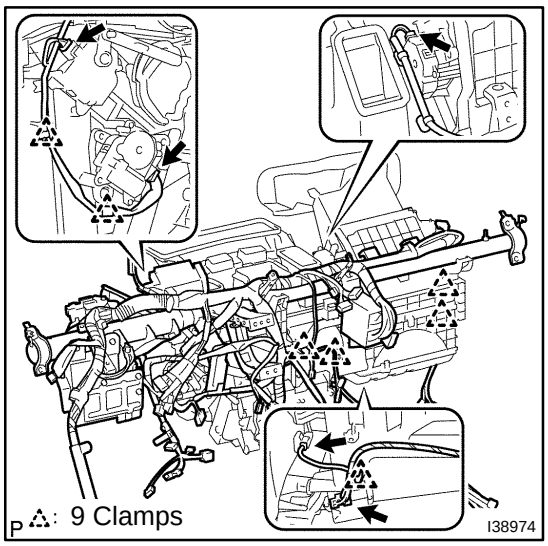

20. REMOVE AIR CONDITIONER UNIT ASSY

(a) Disconnect the 5 connectors and remove the 9 clamps. Disconnect the wire harness.

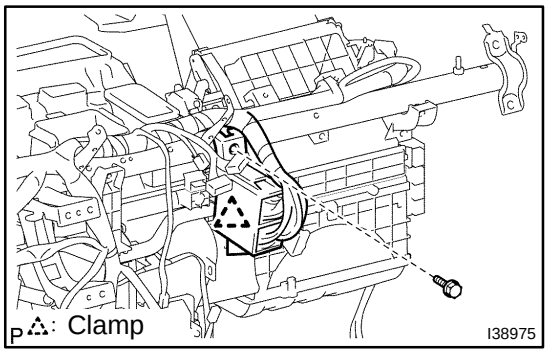

(b) Remove the bolt and the clamp and then disconnect the junction connector.

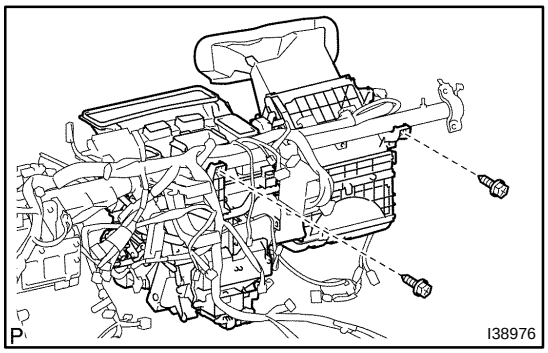

(c) Remove the 2 screws and the air conditioner unit assy from the instrument panel reinforcement assy.

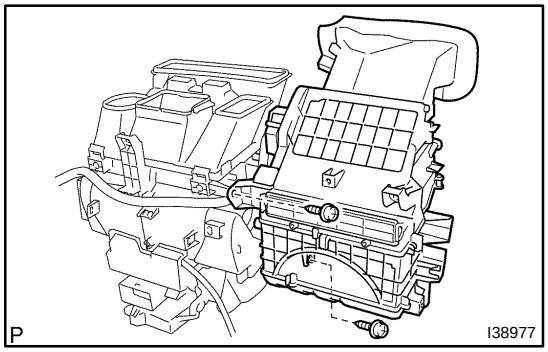

21. REMOVE BLOWER ASSY

(a) Remove the 2 screws.

(b) Disengage the fittings with the air conditioner assy and then remove the blower assy.

cardiagn.com

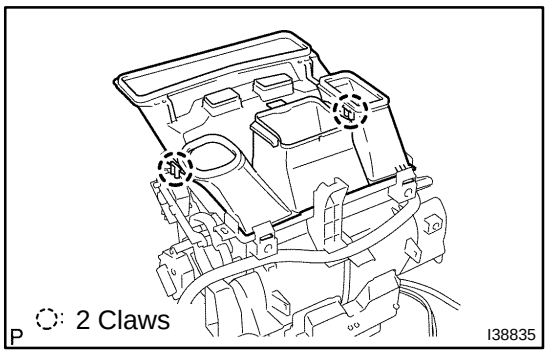

22. REMOVE DEFROSTER NOZZLE ASSY LWR

(a) Disengage the 2 claws and then remove the defroster lower nozzle assy.

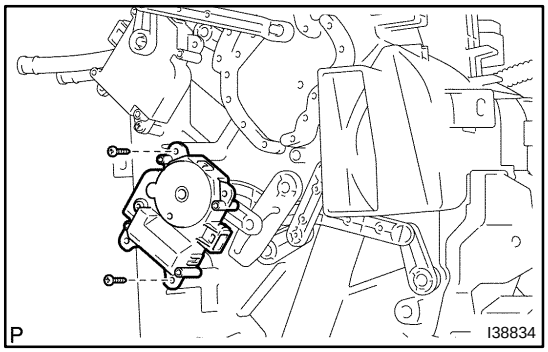

23. REMOVE AIR MIX CONTROL SERVOMOTER

(a) Remove the 2 screws and then the airmix control servomotor.

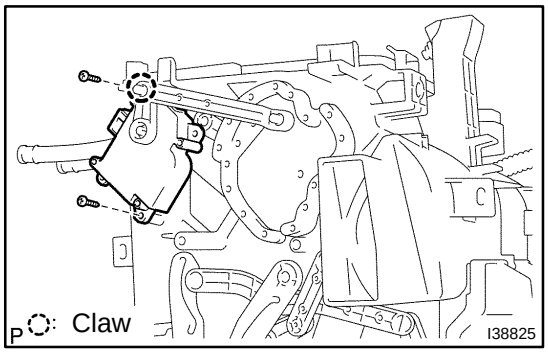

24. AIR OUTLET CONTROL SERVOMOTER

(a) Remove the 2 screws and disengage the claw.

(b) Remove the air outlet control servomoter.

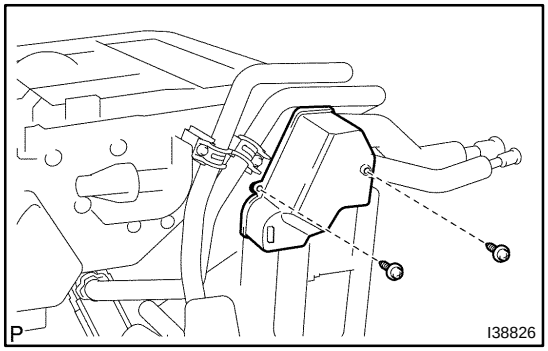

25. REMOVE AIR CONDITIONING TUBE & ACCESSORY ASSY

(a) Remove the 2 screws and then the expansion valve cover.

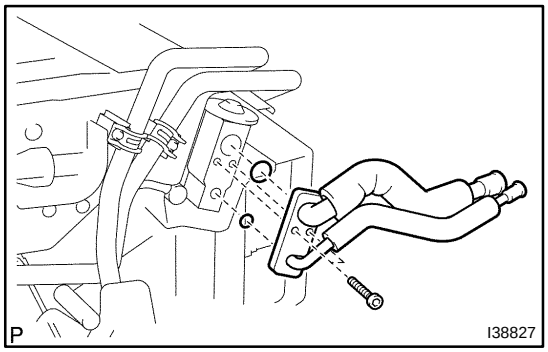

(b) Using a hexagon wrench 4 mm (0.16 in.), remove the 2 hexagon bolts.

(c) Remove the air conditioner tube assy.

(d) Remove the 2 O–rings from the air conditioner tube assy.

cardiagn.com

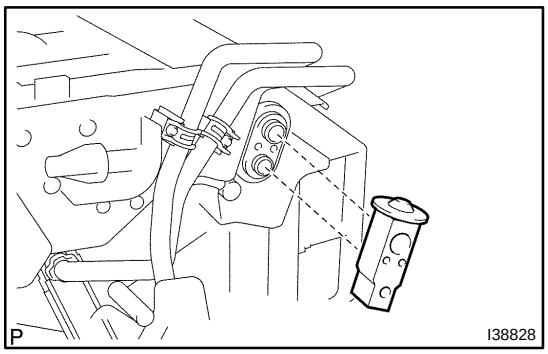

26. REMOVE COOLER EXPANSION VALVE

(a) Remove the cooler expansion valve from the cooler evaporator No.1.

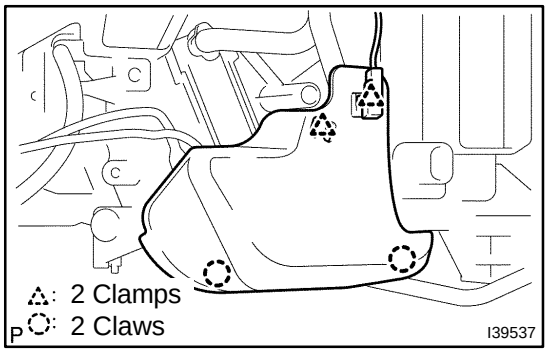

27. REMOVE HEATER RADIATOR UNIT SUB–ASSY

(a) Remove the clamp and then disconnect the evaporator temperature sensor connector.

(b) Remove the clamp and disengage the 2 claws. Remove the heater piping cover.

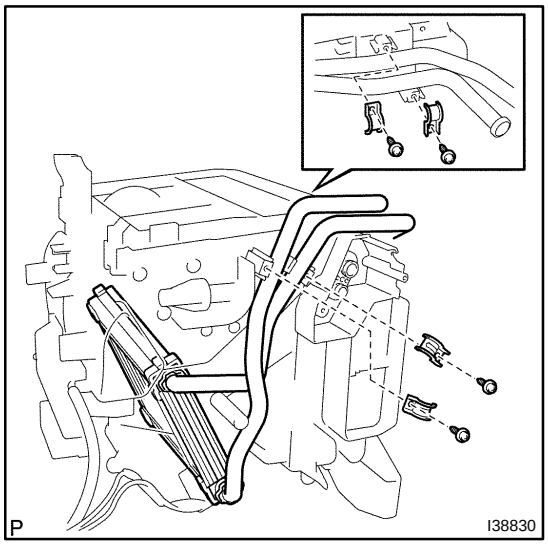

(c) Remove the 4 screws and the 4 clamps.

(d) Remove the radiator heater unit from the air conditioner radiator assy.

NOTICE:

Prepare a drain pan or cloth for when the cooling water leaks.

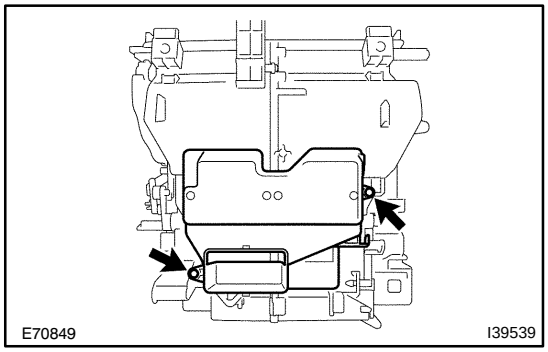

28. REMOVE AIR DUCT NO.1

(a) Remove the 2 screws and then the air duct No.1.

cardiagn.com

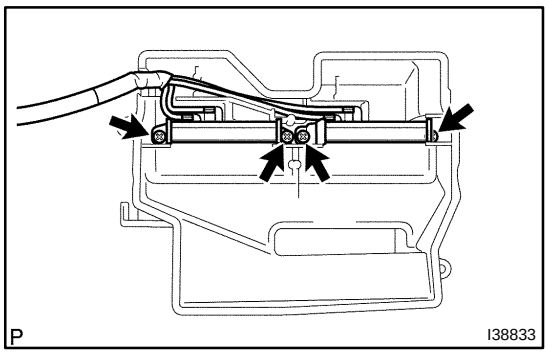

29. REMOVE QUICK HEATER ASSY

(a) Remove the 4 screws and then the quick heater assy.

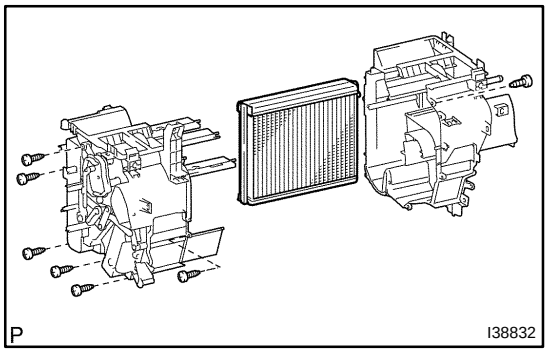

30. REMOVE COOLER EVAPORATOR SUB–ASSY NO.1

(a) Remove the 7 screws and then the cooler evaporator No.1 from the heater case.

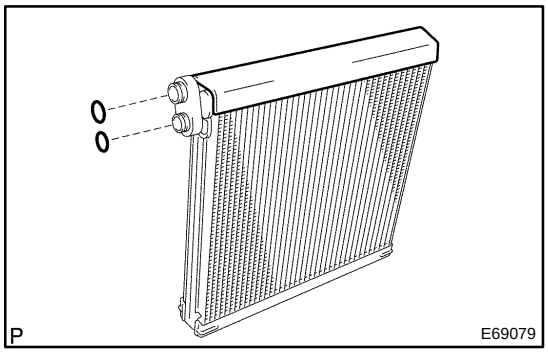

(b) Remove the 2 O–rings from the cooler evaporator No.1.

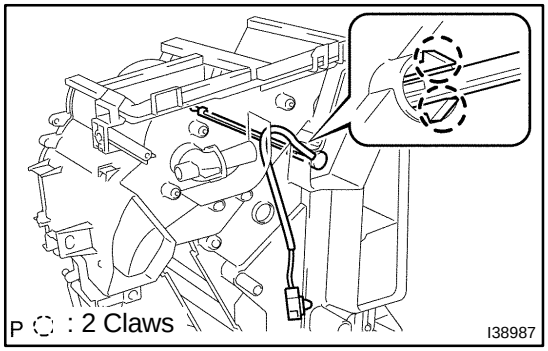

31. REMOVE EVAPORATOR TEMPERAURE SENSOR

(a) Disengage the 2 claws and then remove the evaporator temperature sensor.

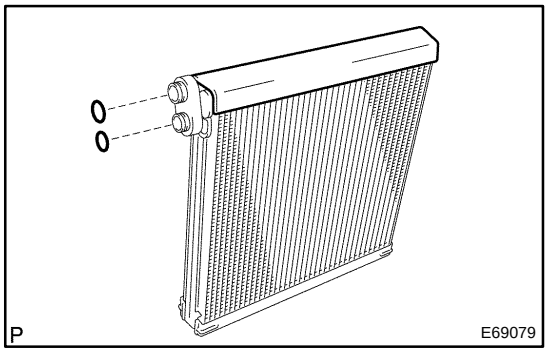

32. INSTALL COOLER EVAPORATOR SUB–ASSY NO.1

(a) Sufficiently apply compressor oil (ND–OIL11) to 2 new O–rings and fitting surface. Install the 2 O–rings to the cooler evaporator No.1.

Compressor oil: ND–OIL 11 or equivalent

cardiagn.com

NOTICE:

★ **Do not use any compressor oil other than ND–OIL11 (see page 55–1).**

★ **If any compressor oil other than ND–OIL11 is used, compressor motor insulation performance may decrease, resulting in a leakage of electric power.**

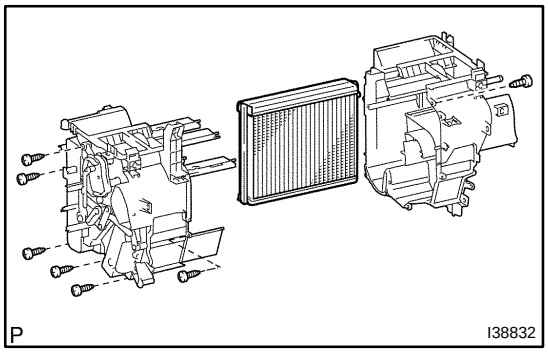

(b) Install the cooler evaporator No.1 with the 7 screws.

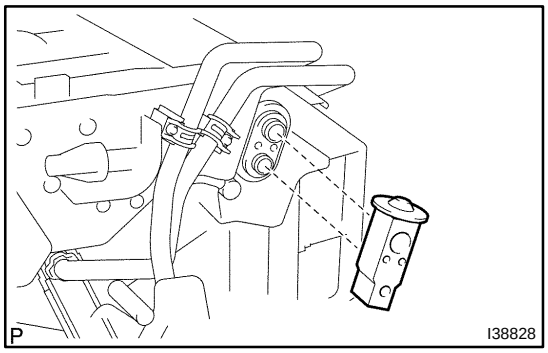

33. INSTALL COOLER EXPANSION VALVE

(a) Install the cooler expansion valve to the cooler evaporator No.1.

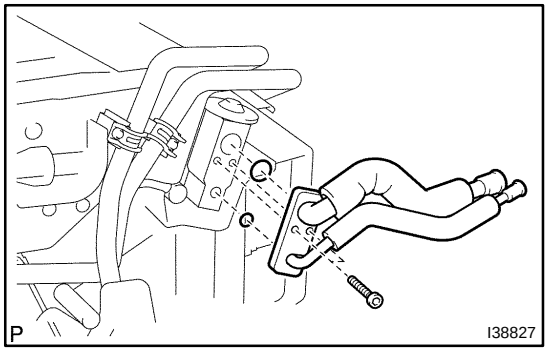

34. INSTALL AIR CONDITIONING TUBE & ACCESSORY ASSY

(a) Sufficiently apply compressor oil (ND–OIL11) to 2 new O–rings and fitting surface. Install the 2 O–rings to the conditioner tube assy.

Compressor oil: ND–OIL 11 or equivalent

NOTICE:

★ **Do not use any compressor oil other than ND–OIL11 (see page 55–1).**

★ **If any compressor oil other than ND–OIL11 is used, compressor motor insulation performance may decrease, resulting in a leakage of electric power.**

(b) Install the air conditioner tube assy to the cooler evaporator No.1, placing the cooler expansion valve between them, Using a hexagon wrench 4 mm (0.16 in.), install the 2 hexagon bolts.

Torque: 3.5 N·m (35 kgf·cm, 30 in.·lbf)

cardiagn.com

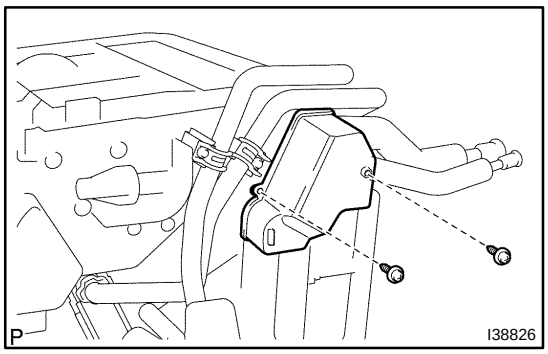

(c) Install the expansion cover with the 2 screws.

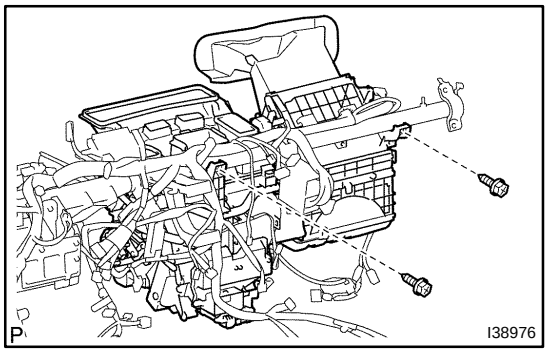

35. INSTALL AIR CONDITIONER UNIT ASSY

(a) Install the air conditioner unit assy to the instrumentpanel reinforcement assy with the 2 screws.

HINT:

Use repair screws (parts No. 90159–70003) if the screws removed before cannot be tightened.

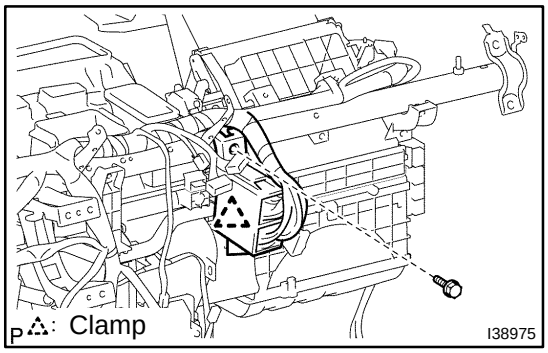

(b) Connect the junction connector with the bolt and the clamp.

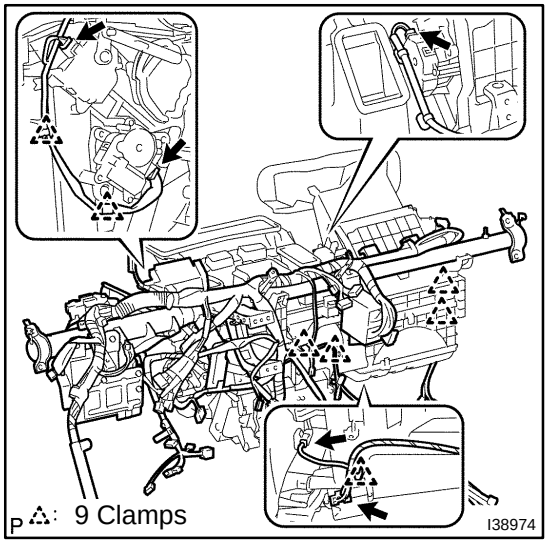

(c) Install the instrument panel wire harness with the 5 connectors and the 9 clamps.

cardiagn.com

36. INSTALL INSTRUMENT PANEL REINFORCEMENT ASSY

(a) Install the instrument panel reinforcement assy with the 7 bolts.

(b) Install the 2 nuts to the air conditioner unit assy and temporarily tighten them.

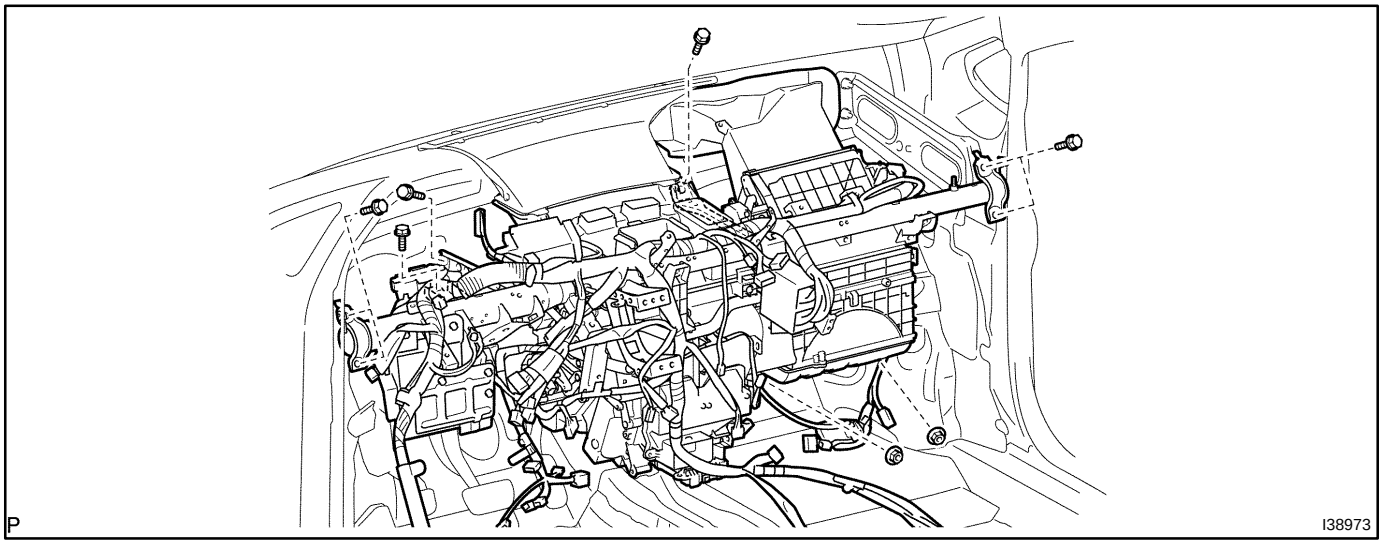

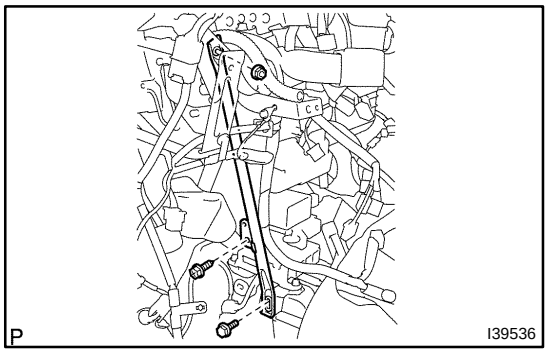

37. INSTALL INSTRUMENT PANEL BRACE SUB–ASSY NO.1

(a) Install the instrument panel brace sub–assy No.1 with the 2 bolts and nut.

(b) Install the harness with a clamp.

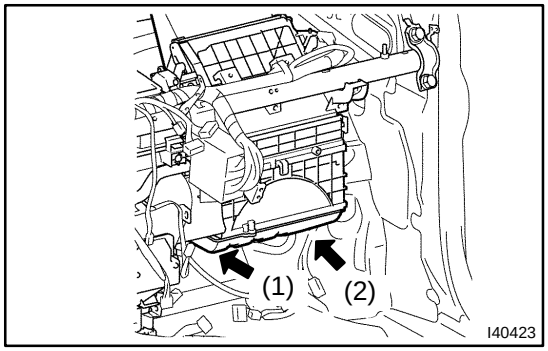

38. FULLY TIGHTEN AIR CONDITIONER UNIT ASSY

(a) Fully tighten the air conditioner unit assy with the 2 nuts.

NOTICE:

Tighten the nuts in the order indicated in the illustration.

39. INSTALL STEERING COLUMN ASSY (SEE PAGE 50–8)

40. INSTALL INSTRUMENT PANEL SUB–ASSY LOWER (SEE PAGE 71–13)

HINT:

Refer to the installation procedures for the instrument panel sub–assy lower.

41. INSTALL INSTRUMENT PANEL SUB–ASSY W/PASSENGER AIRBAG ASSY (SEE PAGE 71–7)

HINT:

Refer to the installation procedures for the instrument panel with the passenger airbag assy.

cardiagn.com

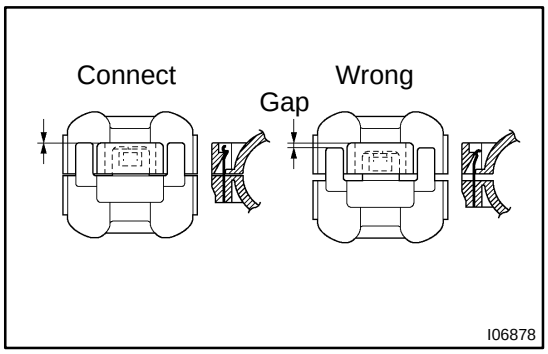

42. INSTALL COOLER REFRIGERANT LIQUID PIPE E (TO COOLER UNIT)

(a) Remove the attached vinyl tape from the pipe disconnected part.

(b) Sufficiently apply compressor oil (ND–OIL11) to 2 new O–rings and pipe connecting part.

NOTICE:

★ **Do not use any compressor oil other than ND–OIL11 (see page 55–1).**

★ **If any compressor oil other than ND–OIL11 is used, compressor motor insulation performance may decrease, resulting in a leakage of electric power.**

(c) Install the O–rings to the pipe.

(d) Insert the pipe joint into the cooler unit fitting hole securely.

(e) Using the piping clamp, install the cooler unit refrigerant liquid pipe E.

NOTICE:

Ensure that the piping clamp is securely engaged.

43. INSTALL SUCTION HOSE SUB–ASSY

HINT:

Install the suction hose sub–assy following the same procedures as for the cooler unit refrigerant liquid pipe E.

44. INSPECT LEAKAGE OF REFRIGERANT (SEE PAGE 55–12)

45. ADD ENGINE COOLANT (SEE PAGE 16–11)

46. CHARGE REFRIGERANT (SEE PAGE 55–12)

SST 07110–58060 (07117–58060, 07117–58070, 07117–58080, 07117–58090, 07117–78050, 07117–88060, 07117–88070, 07117–88080)

Specified amount: 450 ± 30 g (15.87 ± 1.05 oz.)

47. CHECK FOR ENGINE COOLANT LEAKS (SEE PAGE 16–11)

48. WARM UP COMPRESSOR (SEE PAGE 55–12)

49. INSPECT LEAKAGE OF REFRIGERANT (SEE PAGE 55–12)

50. PERFORM CALIBRATION OF TORQUE SENSOR ZERO POINT (SEE PAGE 05–1211)

cardiagn.com

BLOWER ASSY

COMPONENTS

5519H–01

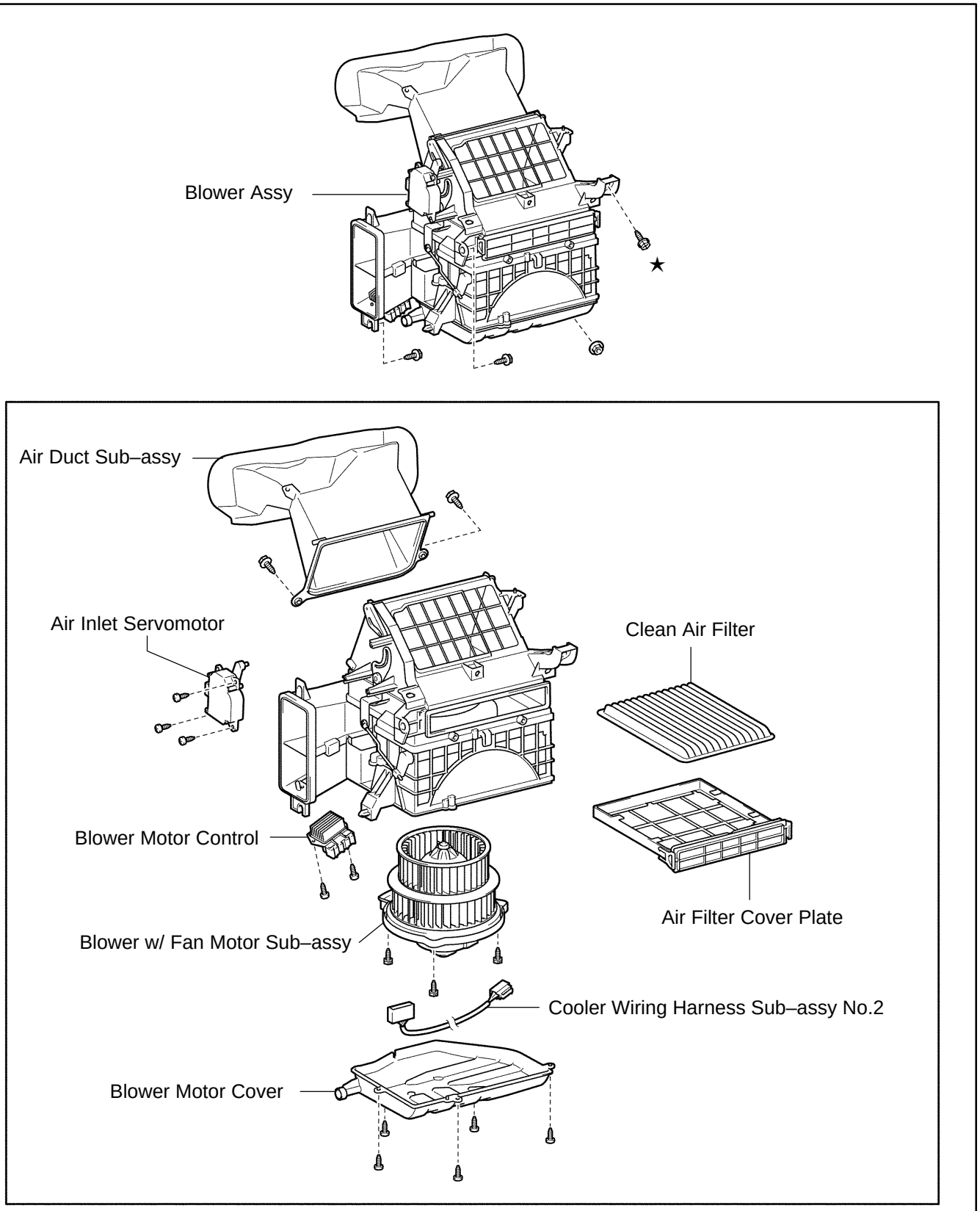

P ★ : Use repair screw (parts No.90159–70003) if the screw removed before cannot be tightened.

I38849

cardiagn.com

5519I–01

OVERHAUL

HINT:

★ Installation is in the reverse order of removal.
★ COMPONENTS for instrument panel safety pad: See page 71–1.
★ COMPONENTS for blower assy: See page 55–29.

1. REMOVE INSTRUMENT PANEL SUB–ASSY W/PASSENGER AIRBAG ASSY (SEE PAGE 71–7)
2. REMOVE INSTRUMENT PANEL SUB–ASSY LOWER (SEE PAGE 71–13)
3. REMOVE TRANSMISSION CONTROL ECU ASSY
4. REMOVE ECM (SEE PAGE 10–24)
5. REMOVE NETWORK GATEWAY ECU (SEE PAGE 67–26)
6. REMOVE HEATER TO REGISTER DUCT NO.1 (SEE PAGE 55–17)

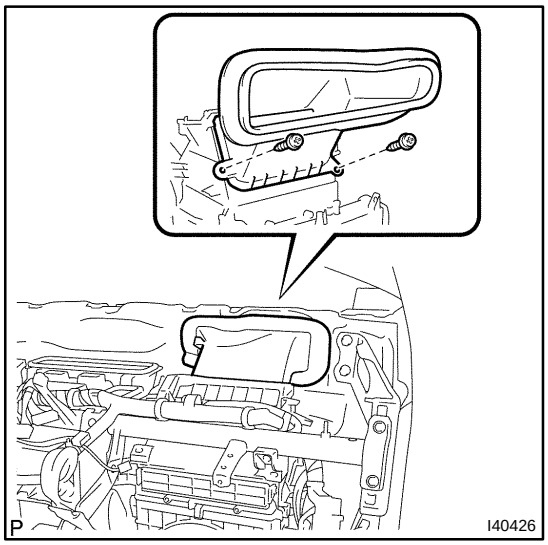

7. REMOVE AIR DUCT SUB–ASSY

(a) Remove the 2 screws and then the air duct sub–assy.

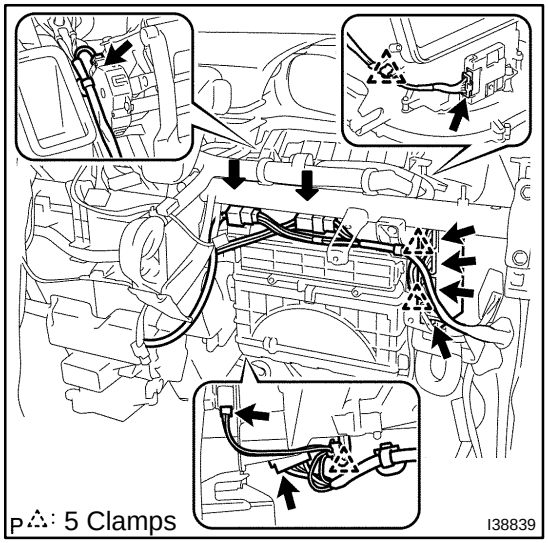

8. REMOVE BLOWER ASSY

(a) Disconnect the 10 connectors and remove the 5 clamps.
(b) Disconnect the wire harness.

cardiagn.com

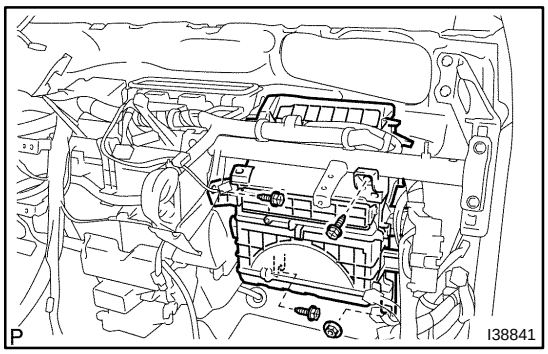

(c) Remove the 3 screws the nut and then the blower assy.

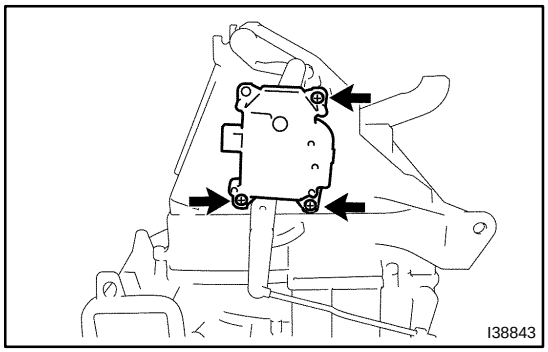

9. REMOVE AIR INLET SERVOMOTER

(a) Remove the 3 screws and then the air inlet servomoter.

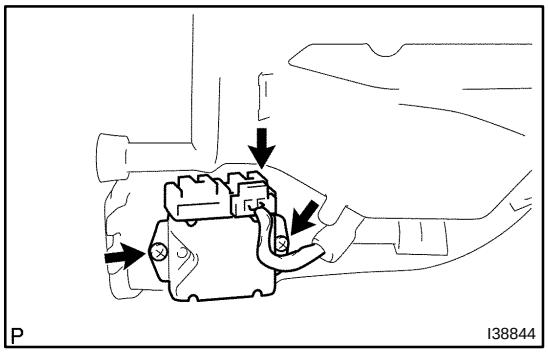

10. REMOVE BLOWER MOTOR CONTROL

(a) Disconnect the connector and remove the 2 screws.

(b) Remove the blower motor control.

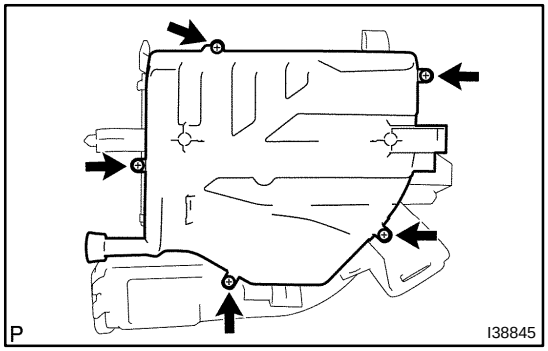

11. REMOVE COOLER WIRING HARNESS SUB–ASSY NO.2

(a) Remove the 5 screws and then the blower motor cover.

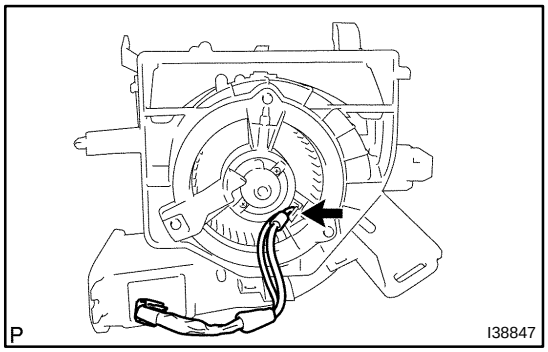

(b) Remove the cooler wiring harness sub–assy No.2 from the blower w/fan motor sub–assy.

cardiagn.com

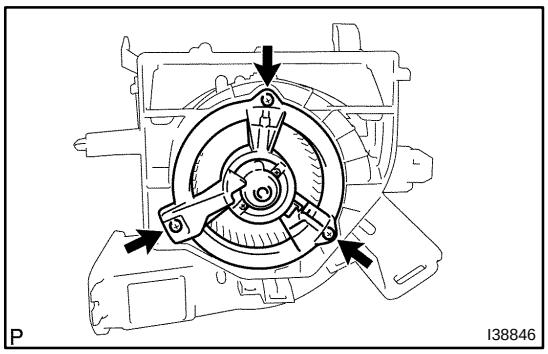

12. REMOVE BLOWER W/FAN MOTOR SUB–ASSY

(a) Remove the 3 screws and then the blower w/fan motor sub–assy.

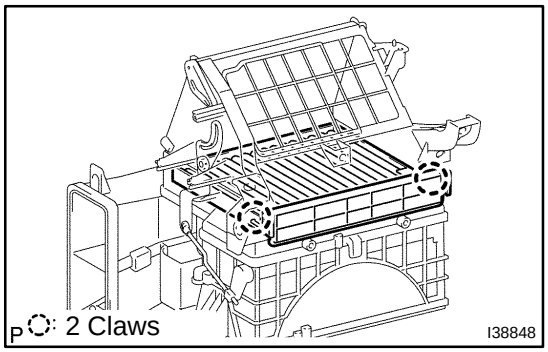

13. REMOVE CLEAN AIR FILTER

(a) Disengage the 2 claws and then remove the air filter cover plate with the clean air filter.

(b) Remove the clean air filter from the air filter cover plate.

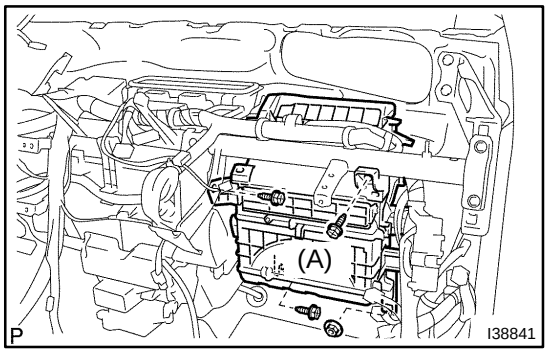

14. INSTALL BLOWER ASSY

(a) Install the blower assy with the 3 screws

HINT:

Use repair screw (parts No.90159–70003) if the screw (A) removed before cannot be tightened.

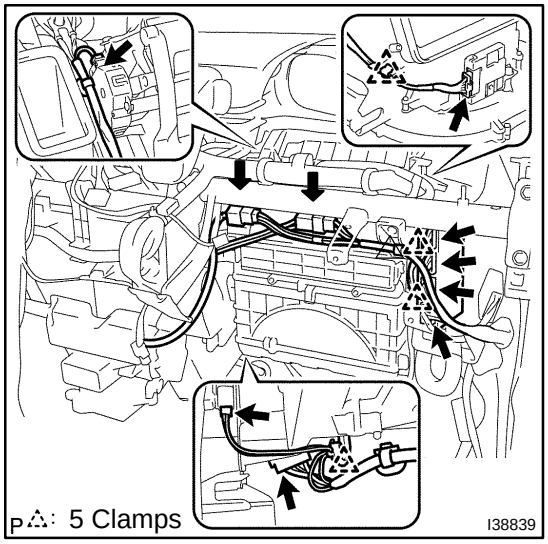

(b) Install the wire harness with the 10 connectors and 5 clamps.

(c) Install the transponder key computer assy connector.

15. INSTALL INSTRUMENT PANEL SUB–ASSY LOWER (SEE PAGE 71–13)

HINT:

Refer to the installation procedures for the instrument panel sub–assy lower.

cardiagn.com

16. INSTALL INSTRUMENT PANEL SUB–ASSY W/PASSENGER AIRBAG ASSY (SEE PAGE 71–7)

HINT:

Refer to the installation procedures for the instrument panel with the passenger airbag assy.

cardiagn.com

ELECTRIC INVERTER COMPRESSOR ASSY

5519J–01

REPLACEMENT

1. **REMOVE REAR FLOOR BOARD NO.2(SEE PAGE 21–116)**
2. **REMOVE DECK FLOOR BOX REAR(SEE PAGE 21–116)**
3. **REMOVE REAR FLOOR BOARD NO.3(SEE PAGE 21–116)**
4. **DISCONNECT BATTERY NEGATIVE TERMINAL (SEE PAGE60–1)**
5. **REMOVE SERVICE PLUG GRIP(SEE PAGE 21–116)**
6. **DISCHARGE REFRIGERANT FROM REFRIGERATION SYSTEM**

   SST 07110–58060 (07117–58080, 07117–58090, 07117–78050, 07117–88060, 07117–88070, 07117–88080)

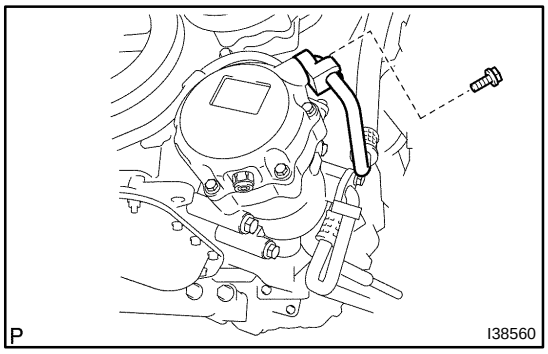

7. DISCONNECT DISCHARGE HOSE SUB–ASSY

(a) Remove the bolt and disconnect the discharge hose sub–assy.

(b) Remove the O–ring from the discharge hose sub–assy.

NOTICE:

Seal the openings of the disconnected parts of the discharge hose and the compressor assy with the electric inverter compressor assy using vinyl tape to prevent moisture and foreign matter from entering.

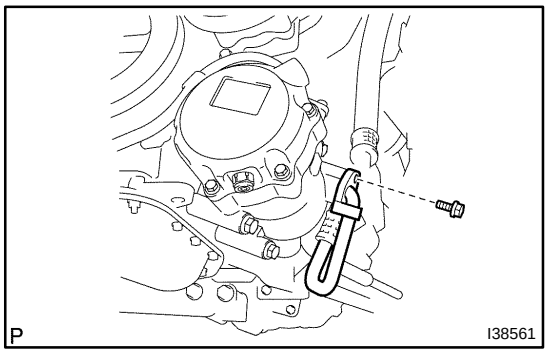

8. DISCONNECT SUCTION HOSE SUB–ASSY

(a) Remove the bolt and disconnect the suction hose sub–assy.

(b) Remove the O–ring from the suction hose sub–aasy.

NOTICE:

Seal the openings of the disconnected parts of the suction hose and the compressor assy with the electric inverter compressor assy using vinyl tape to prevent moisture and foreign matter from entering.

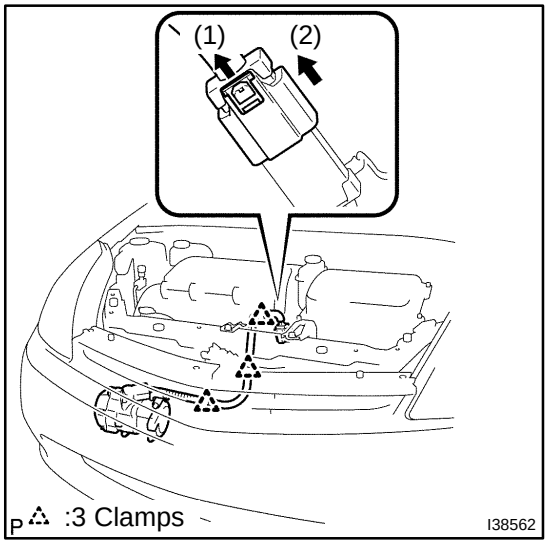

9. REMOVE ELECTRIC INVERTER COMPRESSOR ASSY

(a) Release the green–colored lock.(1)

(b) Disconnect the connector.(2)

(c) Remove the 3 clamps and disconnect the wire harness.

NOTICE:

★ **Wear insulated gloves when performing the procedures.**

★ **Insulate the connector by sealing it with tape.**

cardiagn.com

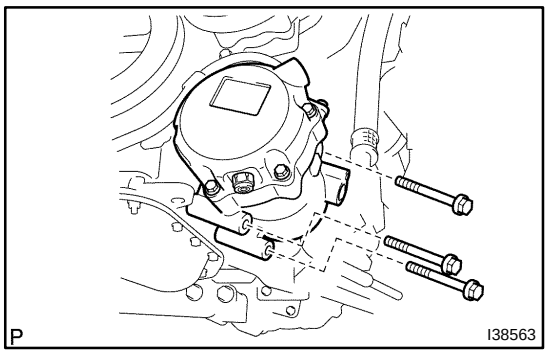

(d) Remove the 3 bolts and then the electric inverter compressor assy.

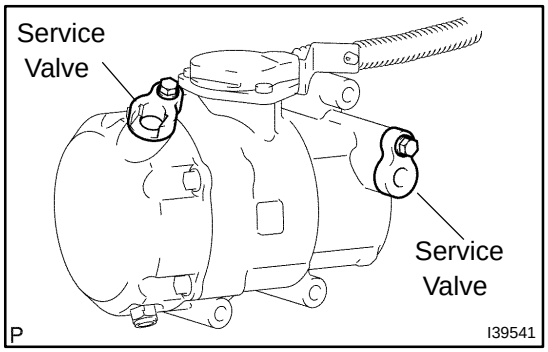

10. INSPECT COMPRESSOR OIL

(a) Gradually discharge inert gas (helium) from the service valve when replacing the electric inverter compressor assy with the inverter compressor assy with a new one. Drain the following amount of oil from the new electric inverter compressor before installation.

Standard:

(Oil capacity inside new electric inverter compressor 100 (+ 15 mL)) – (Remaining oil amount in the removed compressor assy with the motor (w/ motor compressor assy)) = (Oil amount to be removed before installation)

NOTICE:

- ★ **Observe the precautions on the cooler removal/installation procedures when checking the amount of compressor oil.**
- ★ **Because compressor oil remains in the pipes of the vehicle, if a new cooler compressor assy is installed without removing the oil inside, the amount of oil becomes too great, preventing heat exchange in the refrigerant cycles and causing refrigerant failure and/or abnormal vibration.**
- ★ **Check for oil leakage if the remaining oil amount in the removed compressor is too low.**
- ★ **If any compressor oil other than ND–OIL11 is used, compressor motor insulation performance may decrease, resulting in a leakage of electric power.**

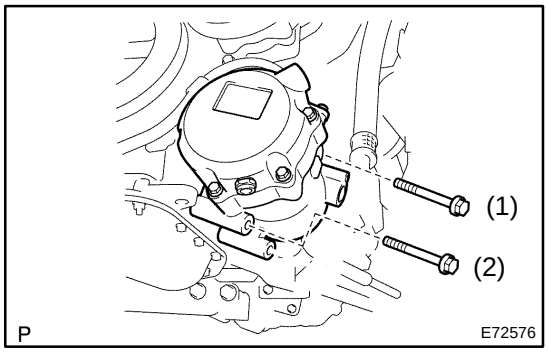

11. TEMPORARILY TIGHTEN ELECTRIC INVERTER COMPRESSOR ASSY

(a) Temporarily tighten the electric inverter compressor assy with the 2 bolts.

NOTICE:

Tighten them in the order indicated in the illustration.

cardiagn.com

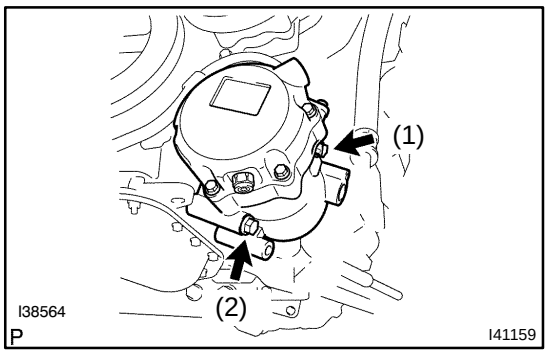

12. FULLY TIGHTEN ELECTRIC INVERTER COMPRESSOR ASSY

(a) Fully tighten the electric inverter compressor assy with the 2 bolts.
Torque: 25 N·m (255 kgf·cm, 18 ft·lbf)

NOTICE:
Tighten them in the order indicated in the illustration.

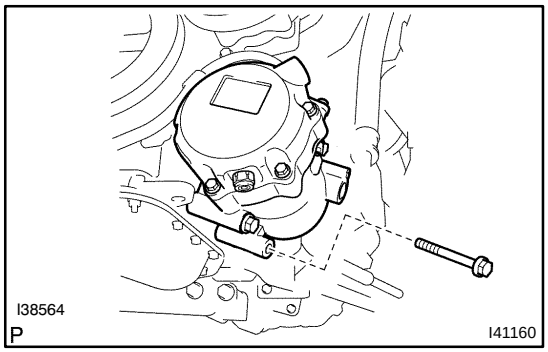

(b) Fully tighten the electric inverter compressor assy with the bolt.
Torque: 25 N·m (255 kgf·cm, 18 ft·lbf)

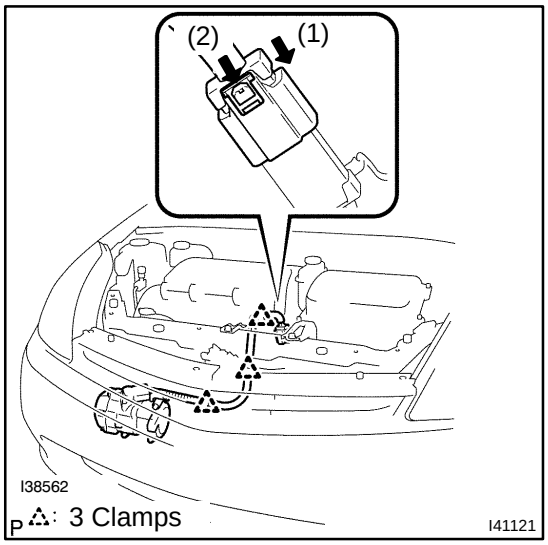

(c) Connect the wire harness.

NOTICE:
Wear insulated gloves when performing the procedures.

(1) Connect the wire harness 3 clamps.
(2) Connect the connector.(1)
(3) Lock the green–colored lock.(2)

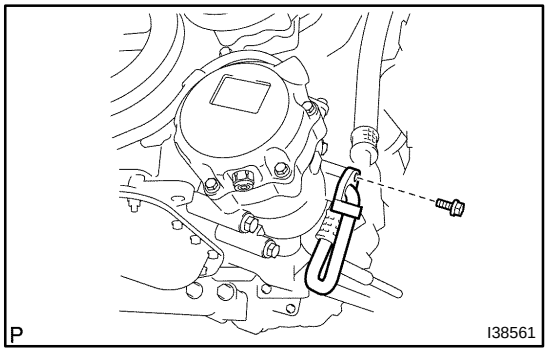

13. INSTALL SUCTION HOSE SUB–ASSY

(a) Sufficiently apply compressor oil to a new O–ring and fitting surface of the electric inverter compressor assy.
Compressor oil: ND–OIL 11 or equivalent

NOTICE:

★ **Do not use any compressor oil other than ND–OIL11 (see page 55–1).**
★ **If any compressor oil other than ND–OIL11 is used, compressor motor insulation performance may decrease, resulting in a leakage of electric power.**

(b) Install the O–ring to the suction hose sub–assy.
(c) Install the suction hose sub–assy with the bolt.
Torque: 9.8 N·m (100 kgf·cm, 87 in.·lbf)

cardiagn.com

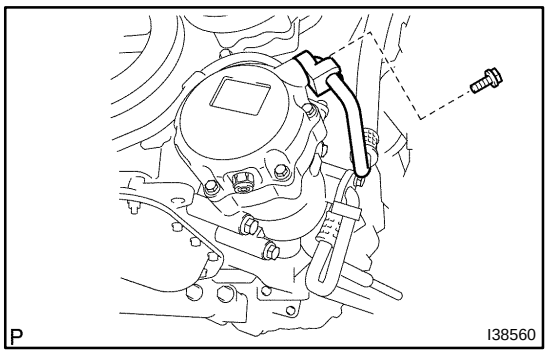

14. INSTALL DISCHARGE HOSE SUB–ASSY

(a) Sufficiently apply compressor oil to a new O–ring and fitting surface of the electric inverter compressor assy.
Compressor oil: ND–OIL 11 or equivalent

NOTICE:

★ **Do not use any compressor oil other than ND–OIL11 (see page 55–1).**

★ **If any compressor oil other than ND–OIL11 is used, compressor motor insulation performance may decrease, resulting in a leakage of electric power.**

(b) Install the O–ring to the discharge hose.

(c) Install the discharge hose with the bolt.
Torque: 9.8 N·m (100 kgf·cm, 87 in.·lbf)

15. INSTALL SERVICE PLUG GRIP(SEE PAGE 21–116)

16. CONNECT BATTERY NEGATIVE TERMINAL

17. INSTALL REAR FLOOR BOARD NO.3

18. INSTALL DECK FLOOR BOX REAR

19. INSTALL REAR FLOOR BOARD NO.2

20. CHARGE REFRIGERANT (SEE PAGE 55–12)

SST 07110–58060 (07117–58060, 07117–58070, 07117–58080, 07117–58090, 07117–78050, 07117–88060, 07117–88070, 07117–88080)

Specified amount: 450 ± 30 g (15.87 ± 1.05 oz.)

21. WARM UP COMPRESSOR (SEE PAGE 55–12)

22. INSPECT LEAKAGE OF REFRIGERANT (SEE PAGE 55–12)

cardiagn.com

W/RECEIVER CONDENSER ASSY

5519K–01

ON–VEHICLE INSPECTION

1. INSPECT COOLER CONDENSER CORE

(a) If the fins of the condenser assy (w/ receiver) are dirty, clean them with water and dry them with compressed air.

NOTICE:

Do not damage the fins of the cooler condenser core.

(b) If the fins of the condenser assy (w/ receiver) are bent, straighten them using a screwdriver or pliers.

2. INSPECT LEAKAGE OF REFRIGERANT

(a) Using a halogen leak detector, check the pipe joints for gas leakage.

(b) Check the tightening torque of the joint if gas leakage is detected in a pipe joint.

cardiagn.com

5519L–01

COMPONENTS

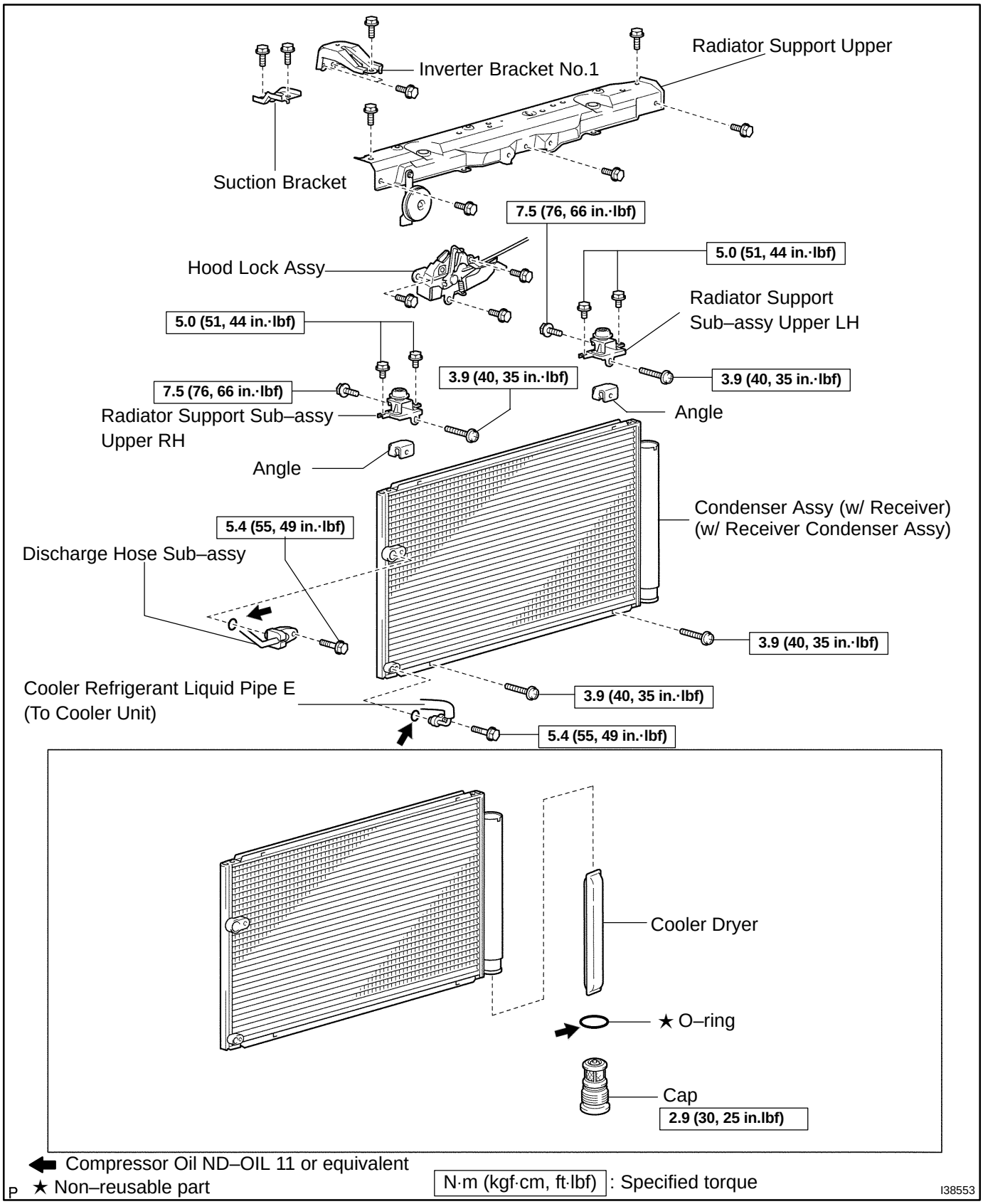

cardiagn.com

5519M–01

OVERHAUL

HINT:

COMPONENTS for condenser assy: See page 55–39.

1. DISCHARGE REFRIGERANT FROM REFRIGERATION SYSTEM (SEE PAGE 55–12)

SST 07110–58060 (07117–58080, 07117–58090, 07117–78050, 07117–88060, 07117–88070, 07117–88080)

2. REMOVE FRONT FENDER LINER LH

3. REMOVE FRONT FENDER LINER RH

4. REMOVE FRONT BUMPER COVER

5. REMOVE INVERTER BRACKET NO.1 (SEE PAGE 16–33)

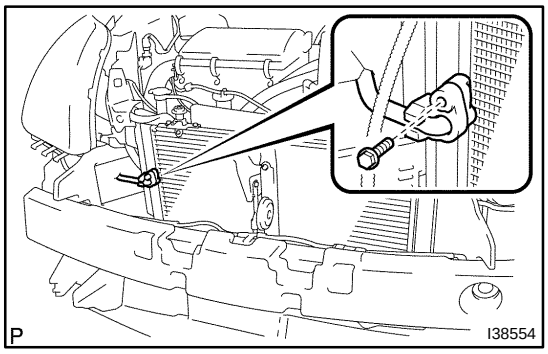

6. DISCONNECT DISCHARGE HOSE SUB–ASSY

(a) Remove the bolt and disconnect the discharge hose sub–assy from the condenser assy (w/ receiver).

(b) Remove the O–ring from the discharge hose sub–assy.

NOTICE:

Seal the openings of the disconnected parts of the discharge hose and the condenser assy using vinyl tape to prevent moisture and foreign matter from entering.

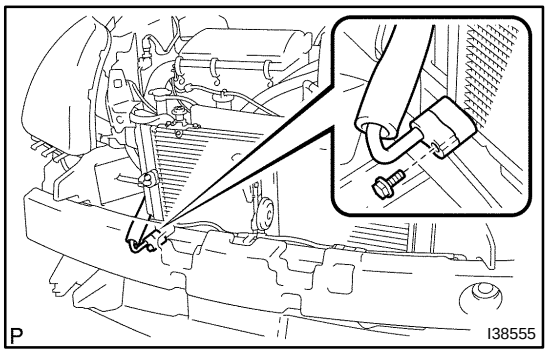

7. DISCONNECT COOLER REFRIGERANT LIQUID PIPE E (TO COOLER UNIT)

(a) Remove the bolt and disconnect the cooler unit refrigerant liquid pipe E from the condenser assy (w/ receiver).

(b) Remove the O–ring from the cooler refrigerant liquid pipe E.

NOTICE:

Seal the openings of the disconnected parts of the cooler unit refrigerant liquid pipe E and the condenser assy using vinyl tape to prevent moisture and foreign matter from entering.

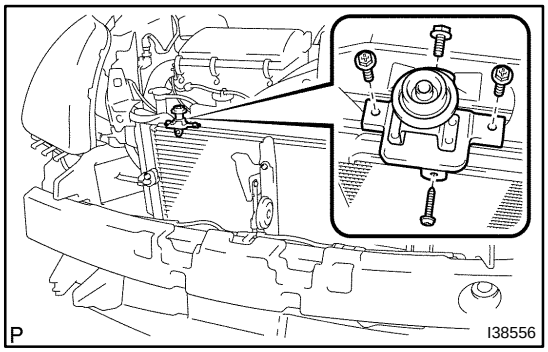

8. REMOVE RADIATOR SUPPORT SUB–ASSY UPPER RH

(a) Remove the 4 bolts and then the radiator support sub–assy upper RH.

cardiagn.com

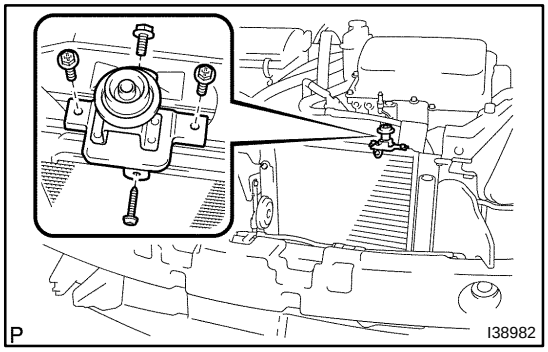

9. REMOVE RADIATOR SUPPORT SUB–ASSY UPPER LH

(a) Remove the 4 bolts and then the radiator support sub–assy upper LH.

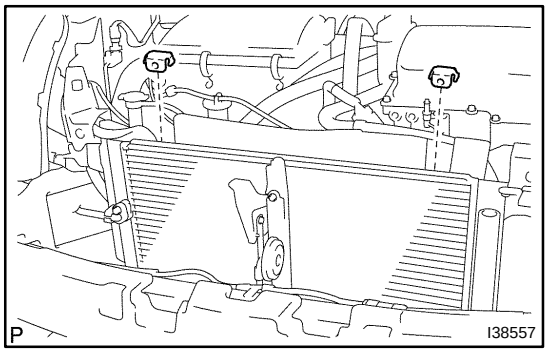

10. REMOVE W/RECEIVER CONDENSER ASSY

(a) Remove the 2 angles.

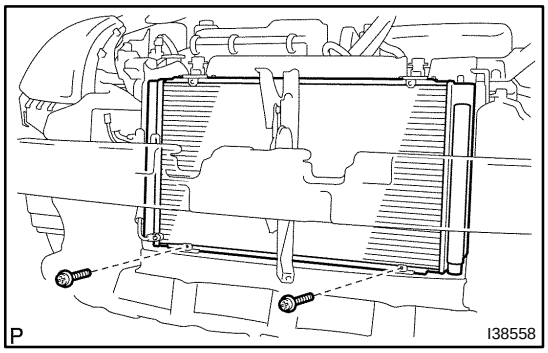

(b) Remove the 2 bolts and then the condenser assy (w/ receiver).

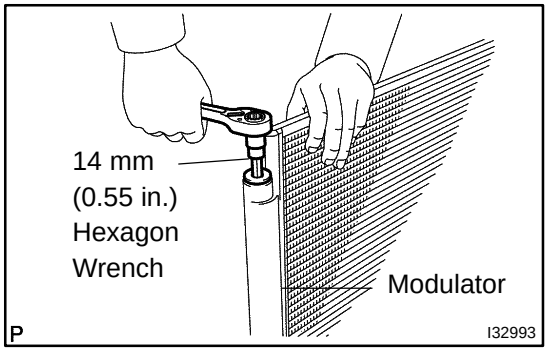

11. REMOVE COOLER DRYER

(a) Using the straight hexagon wrench 14mm (0.55 in.), remove the cap from the modulator.

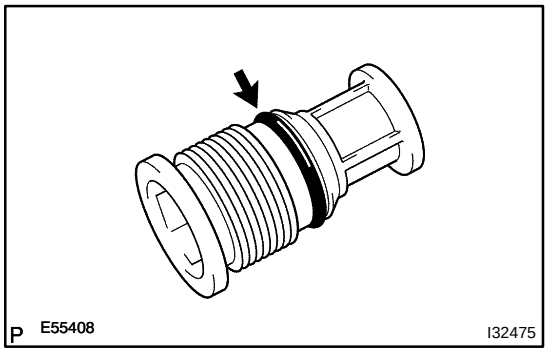

(b) Remove the O–ring from the cap.

cardiagn.com

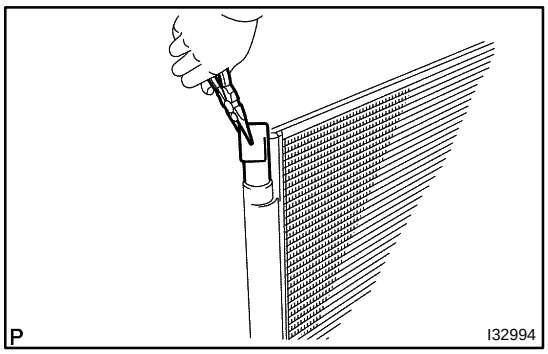

(c) Using pliers, remove the cooler dryer.

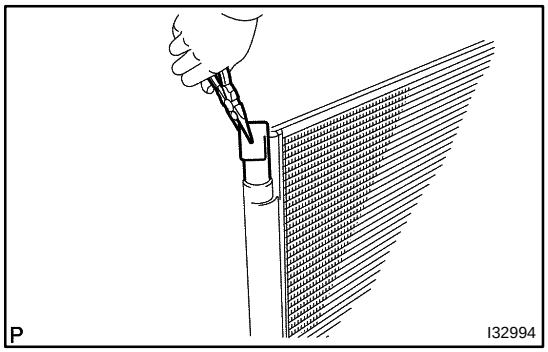

12. INSTALL COOLER DRYER

(a) Using pliers, install the cooler dryer to the modulator.

(b) Install a new O–ring to the cap.

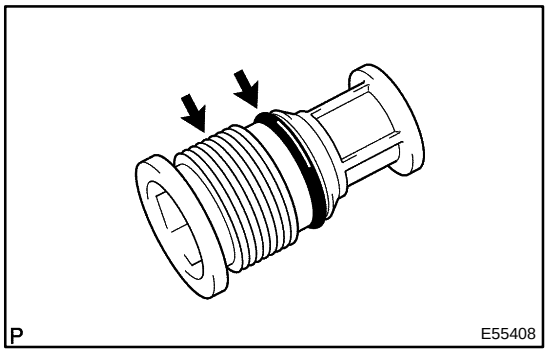

(c) Sufficiently apply compressor oil (ND–OIL11) to the O–ring and cap fitting surface.
Compressor oil: ND–OIL 11 or equivalent

NOTICE:

★ **Do not use any compressor oil other than ND–OIL11 (see page 55–1).**

★ **If any compressor oil other than ND–OIL11 is used, compressor motor insulation performance may decrease, resulting in a leakage of electric power.**

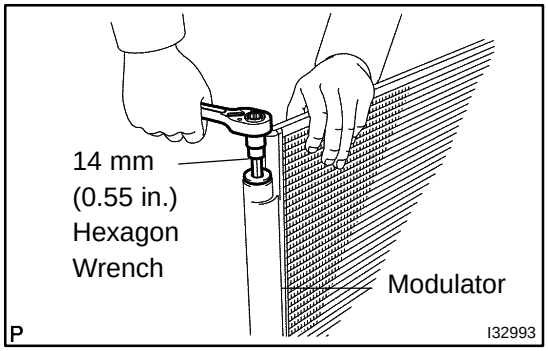

(d) Using a straight hexagon wrench 14mm (0.55 in.), install the cap to the cooler condenser core .
Torque: 2.9 N·m (30 kgf·cm, 25 in.·lbf)

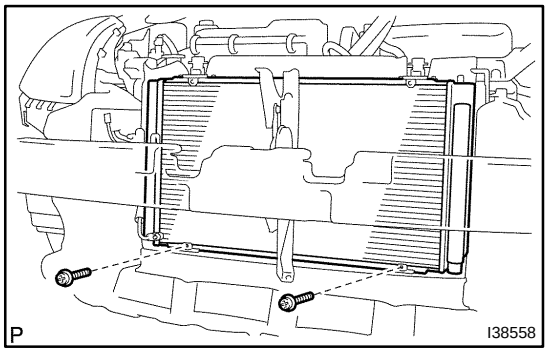

13. INSTALL W/RECEIVER CONDENSER ASSY

(a) Install the condenser assy (w/ receiver) with 2 bolts.
Torque: 3.9 N·m (40 kgf·cm, 35 in.·lbf)

cardiagn.com

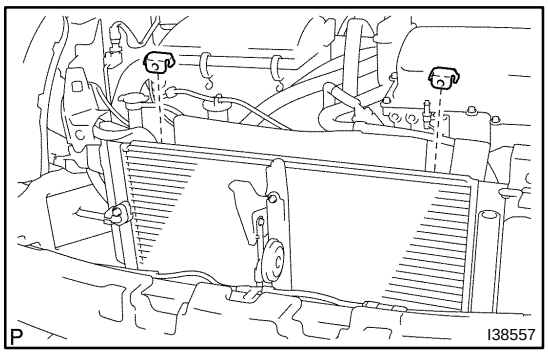

(b) Install the 2 angles to the condenser assy (w/ receiver).

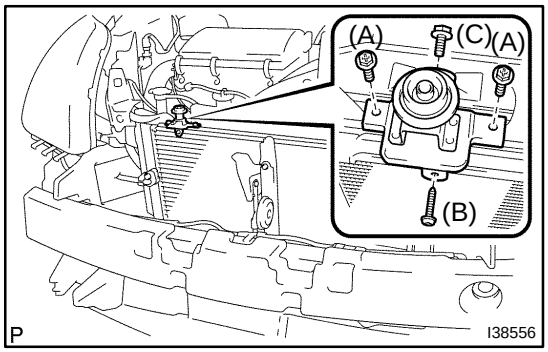

14. INSTALL RADIATOR SUPPORT SUB–ASSY UPPER RH

(a) Install the radiator support sub–assy upper RH with the 4 bolts.

Torque:
Bolt A: 5.0 N·m (51 kgf·cm, 44 in.·lbf)
Bolt B: 3.9 N·m (40 kgf·cm, 35 in.·lbf)
Bolt C: 7.5 N·m (76 kgf·cm, 66 in.·lbf)

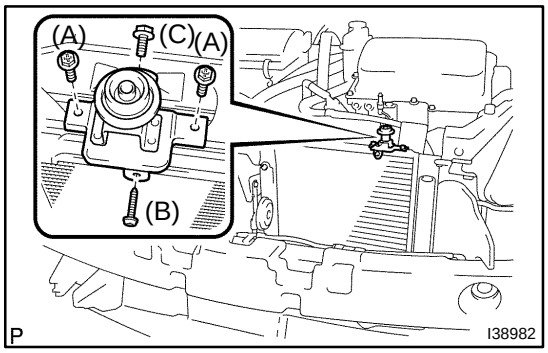

15. INSTALL RADIATOR SUPPORT SUB–ASSY UPPER LH

(a) Install the radiator support sub–assy upper LH with the 4 bolts.

Torque:
Bolt A: 5.0 N·m (51 kgf·cm, 44 in.·lbf)
Bolt B: 3.9 N·m (40 kgf·cm, 35 in.·lbf)
Bolt C: 7.5 N·m (76 kgf·cm, 66 in.·lbf)

16. INSTALL COOLER REFRIGERANT LIQUID PIPE E (TO COOLER UNIT)

(a) Remove the attached vinyl tape from the disconnected parts of the cooler refrigerant liquid pipe E and condenser assy (w/ receiver).

(b) Install a new O–ring to the cooler refrigerant liquid pipe E.

(c) Sufficiently apply compressor oil (ND–OIL11) to the O–ring and the cooler refrigerant liquid pipe E fitting surface.
Compressor oil: ND–OIL 11 or equivalent

NOTICE:

★ **Do not use any compressor oil other than ND–OIL11 (see page 55–1).**

★ **If any compressor oil other than ND–OIL11 is used, compressor motor insulation performance may decrease, resulting in a leakage of electric power.**

cardiagn.com

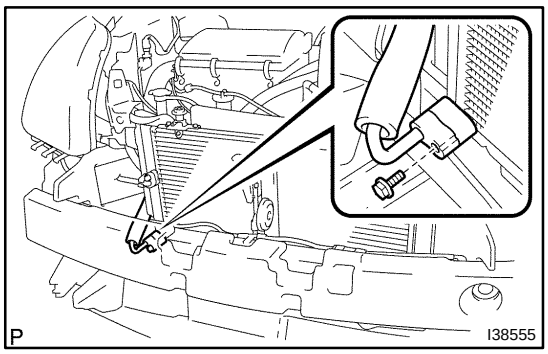

(d) Install the cooler refrigerant liquid pipe E to the condenser assy (w/ receiver) with the bolt.
Torque: 5.4 N·m (55 kgf·cm, 47 in.·lbf)

17. INSTALL DISCHARGE HOSE SUB–ASSY

(a) Remove the attached vinyl tape from the disconnected parts of the discharge hose sub–assy and the condenser assy (w/ receiver).

(b) Install a new O–ring to the discharge hose sub–assy.

(c) Sufficiently apply compressor oil (ND–OIL11) to the O–ring and the discharge hose fitting surface.
Compressor oil: ND–OIL 11 or equivalent

NOTICE:

★ **Do not use any compressor oil other than ND–OIL11 (see page 55–1).**

★ **If any compressor oil other than ND–OIL11 is used, compressor motor insulation performance may decrease, resulting in a leakage of electric power.**

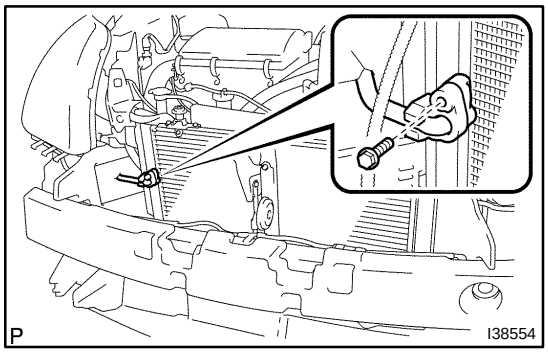

(d) Install the discharge hose to the condenser assy (w/ receiver) with the bolt.
Torque: 5.4 N·m (55 kgf·cm, 47 in.·lbf)

18. INSTALL INVERTER BRACKET NO.1 (SEE PAGE 16–33)

19. INSTALL FRONT BUMPER COVER

20. INSTALL FRONT FENDER LINER RH

21. INSTALL FRONT FENDER LINER LH

22. CHARGE REFRIGERANT (SEE PAGE 55–12)

SST 07110–58060 (07117–58060, 07117–58070, 07117–58080, 07117–58090, 07117–78050, 07117–88060, 07117–88070, 07117–88080)

Specified amount: 450 ± 30 g (15.87 ± 1.05 oz.)

23. WARM UP COMPRESSOR (SEE PAGE 55–12)

24. INSPECT LEAKAGE OF REFRIGERANT (SEE PAGE 55–12)

cardiagn.com

HEATER WATER PUMP ASSY

REPLACEMENT

5519N–01

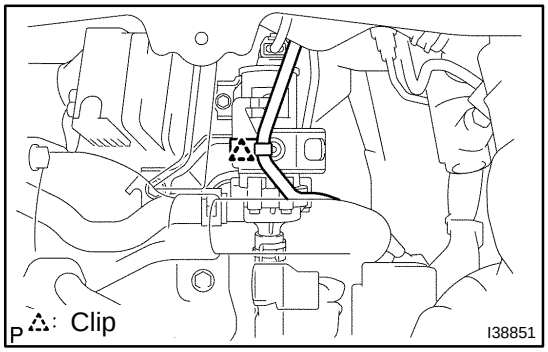

1. DISCONNECT HEATER WATER HOSE C

(a) Disengage the clip and disconnect the wire harness.

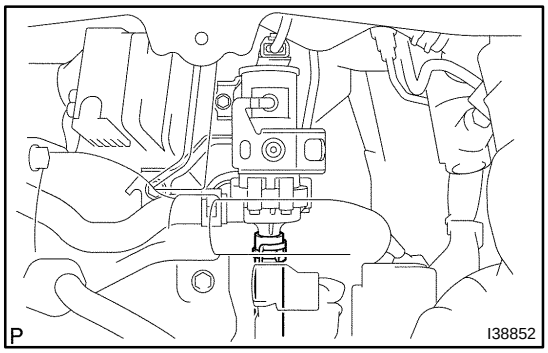

(b) Slide the hose clip and then disconnect the heater water hose C.

NOTICE:

- ★ **Do not apply excessive force to the heater water hose C.**
- ★ **Prepare a drain pan or cloth for when the cooling water leaks.**

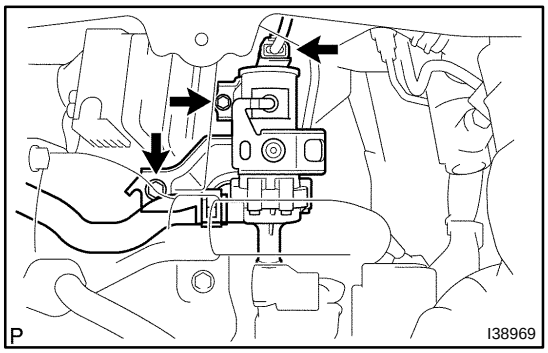

2. REMOVE HEATER WATER PUMP ASSY

(a) Disconnect the connector.

(b) Remove the 2 bolts and then disconnect the heater water pump assy.

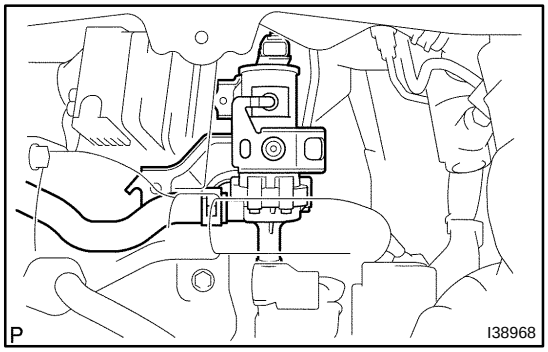

(c) Slide the hose clip and then disconnect the heater water hose A.

(d) Remove the heater water pump assy.

NOTICE:

- ★ **Do not apply excessive force to the heater water hose A.**
- ★ **Prepare a drain pan or cloth for when the cooling water leaks.**

cardiagn.com

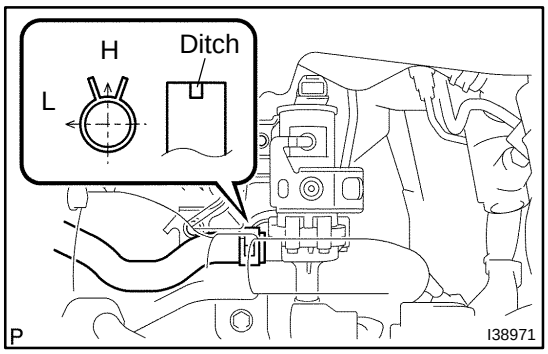

3. INSTALL HEATER WATER PUMP ASSY

(a) Install the heater water hose A with the hose clip.

NOTICE:

- ★ **Ensure that the hose ditch faces upwards.**
- ★ **Install the hose clip in the direction as shown in the illustration.**

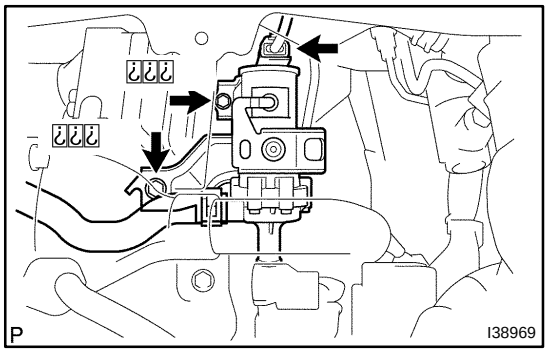

(b) Install the heater water pump assy with the 2 bolts.

NOTICE:

Tighten them in the order indicated in the illustration.

(c) Connect the connector.

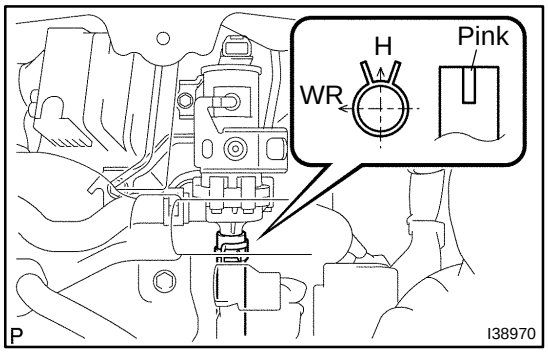

4. INSTALL HEATER WATER HOSE C

(a) Install the heater water hose C with the hose clip.

NOTICE:

- ★ **Install the hose marking facing upwards.**
- ★ **Install the hose clip in the direction as shown in the illustration.**

5. ADD ENGINE COOLANT (SEE PAGE 16–11)

6. CHECK FOR ENGINE COOLANT LEAKS (SEE PAGE 16–11)

cardiagn.com

AIR CONDITIONING AMPLIFIER ASSY

5519O–01

REPLACEMENT

1. REMOVE INSTRUMENT PANEL FINISH PANEL LOWER CENTER (SEE PAGE 71–13)

2. REMOVE AIR DUCT REAR NO.3 (SEE PAGE 55–17)

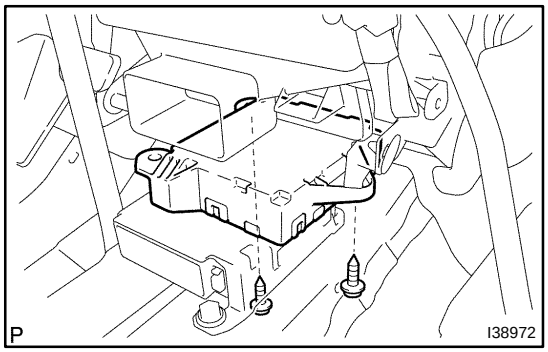

3. REMOVE AIR CONDITIONING AMPLIFIER ASSY

(a) Disconnect the connector.

(b) Remove the 2 screws and then the air conditioning amplifier assy.

cardiagn.com