FRONT FLOOR FOOTREST

COMPONENTS

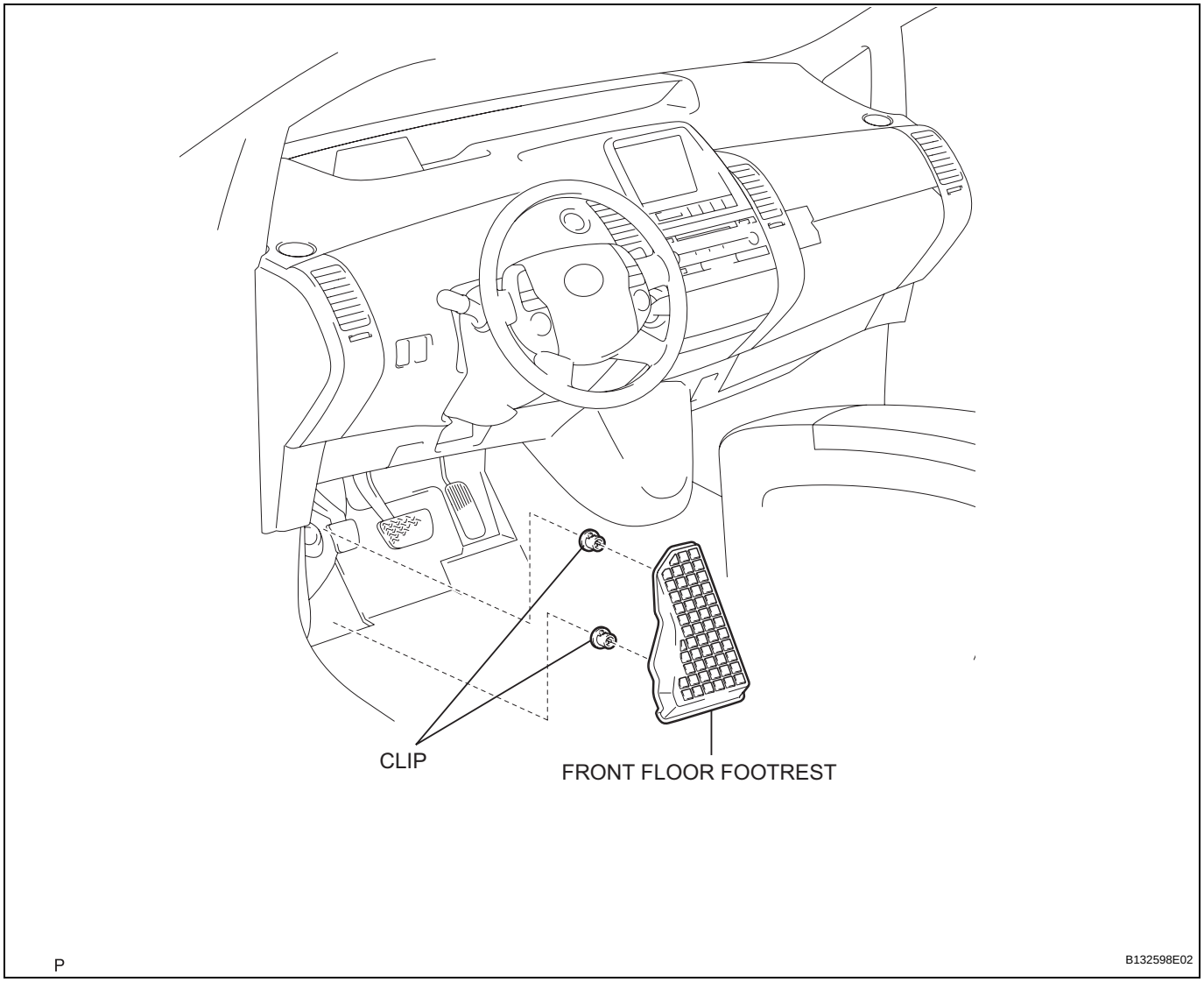

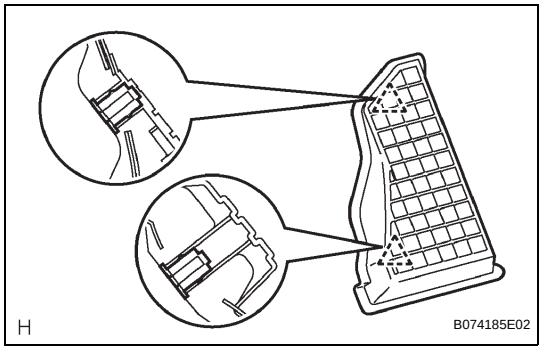

REMOVAL

1. REMOVE FRONT FLOOR FOOTREST

(a) Using a screwdriver, detach the 2 clips and remove the footrest.

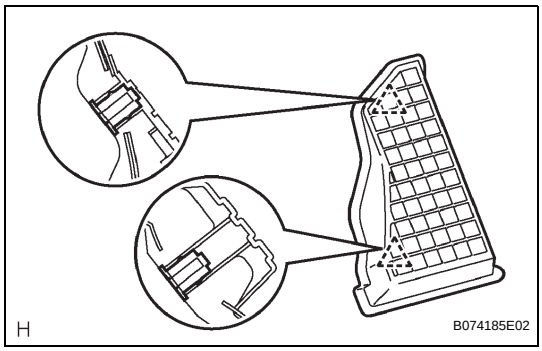

INSTALLATION

1. INSTALL FRONT FLOOR FOOTREST

(a) Attach the 2 clips to install the footrest.

ROOF HEADLINING

COMPONENTS

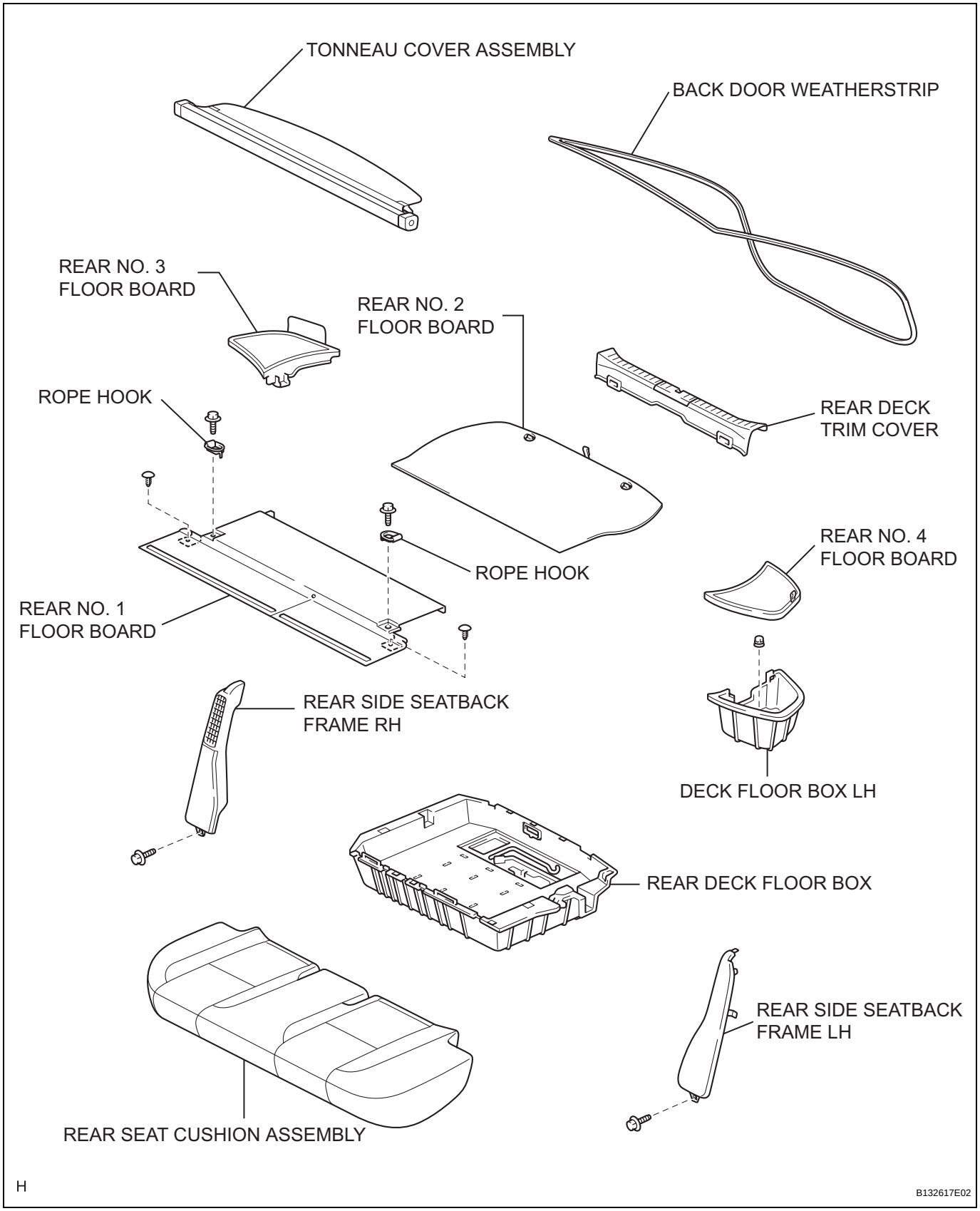

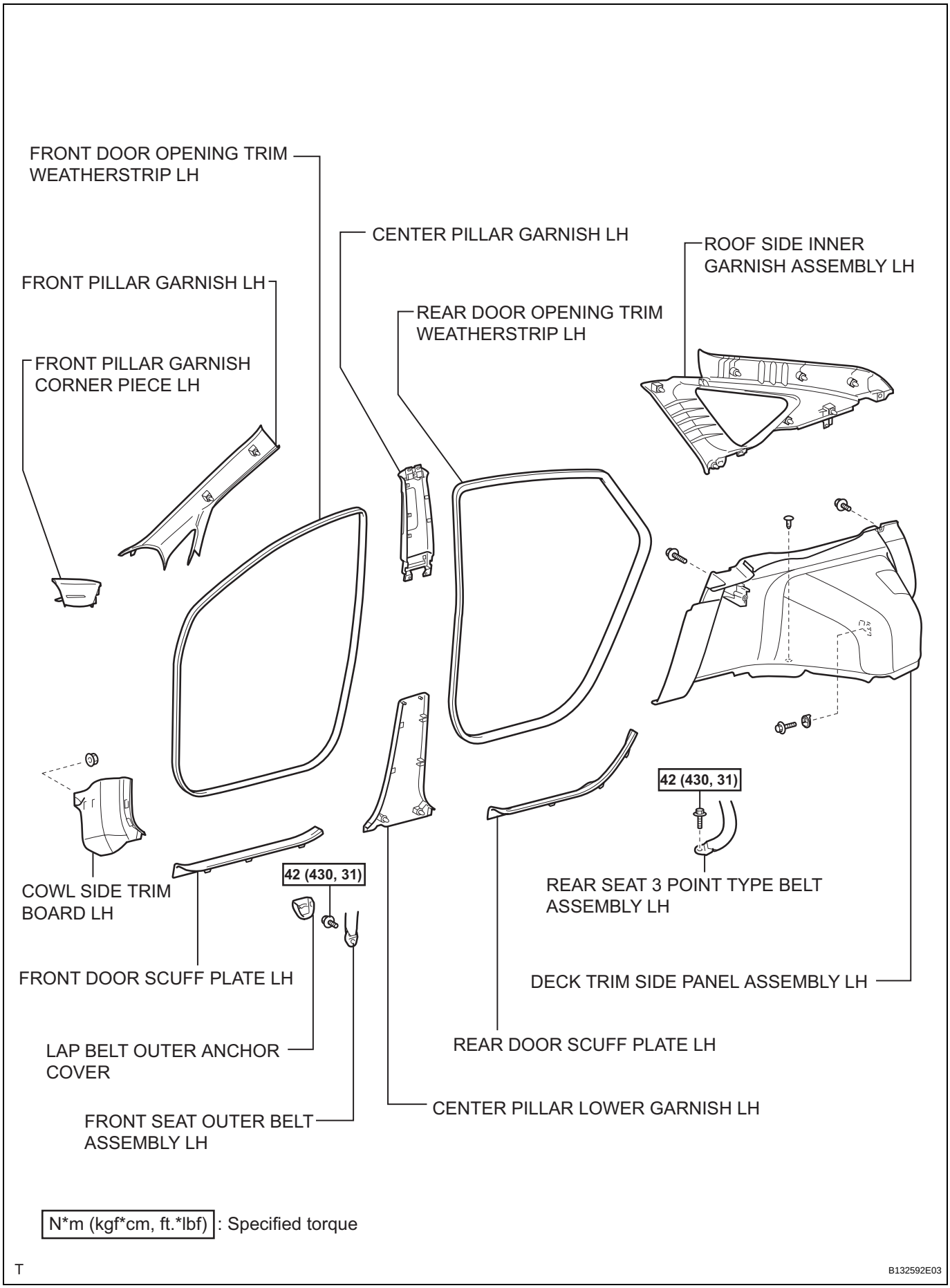
FRONT DOOR OPENING TRIM WEATHERSTRIP LH
CENTER PILLAR GARNISH LH
ROOF SIDE INNER GARNISH ASSEMBLY LH
FRONT PILLAR GARNISH LH
REAR DOOR OPENING TRIM WEATHERSTRIP LH
FRONT PILLAR GARNISH CORNER PIECE LH
42 (430, 31)
COWL SIDE TRIM BOARD LH
42 (430, 31)
REAR SEAT 3 POINT TYPE BELT ASSEMBLY LH
FRONT DOOR SCUFF PLATE LH
DECK TRIM SIDE PANEL ASSEMBLY LH
LAP BELT OUTER ANCHOR COVER
REAR DOOR SCUFF PLATE LH
CENTER PILLAR LOWER GARNISH LH
FRONT SEAT OUTER BELT ASSEMBLY LH
N*m (kgf*cm, ft.*lbf) : Specified torque
T
B132592E03

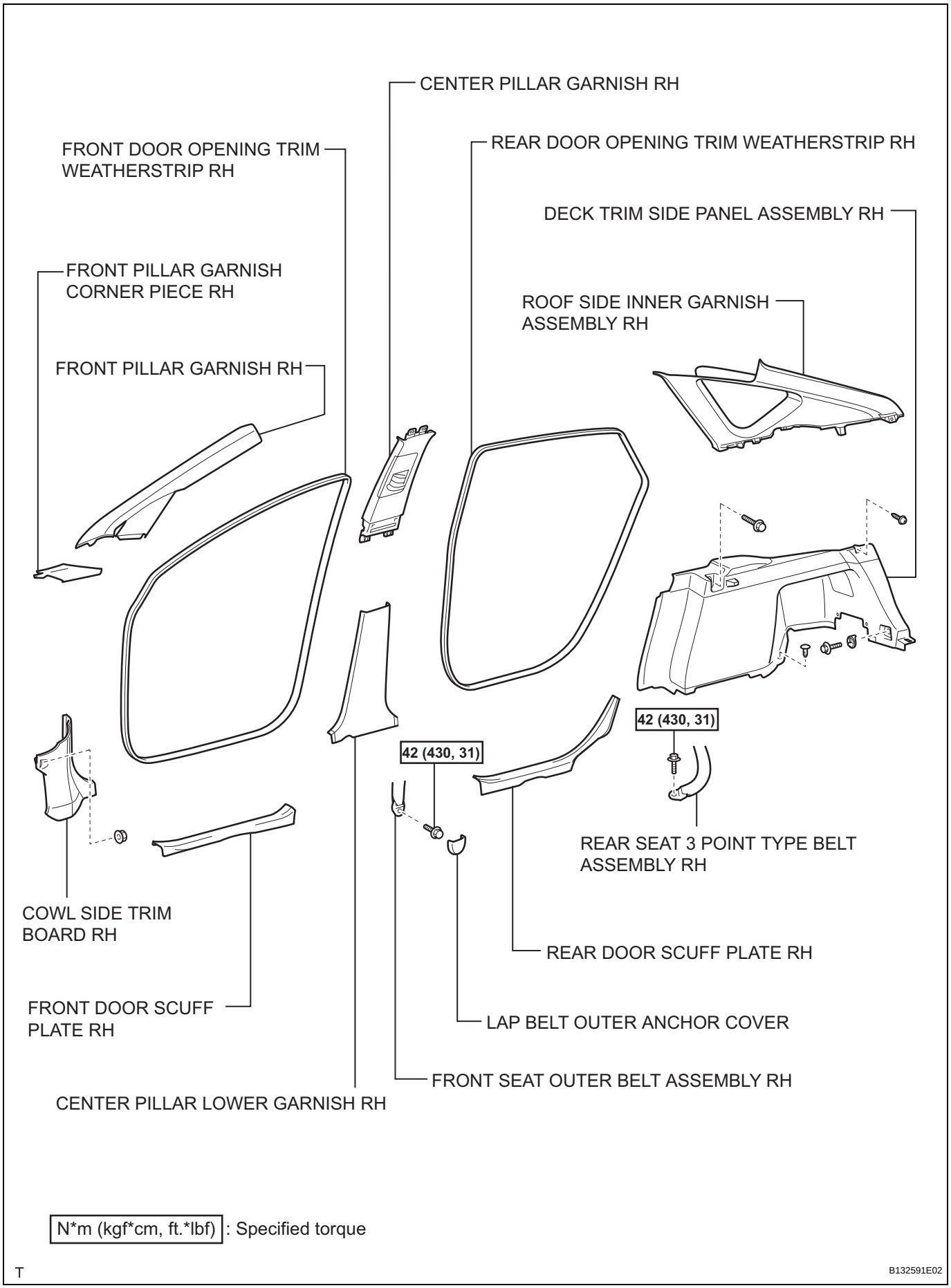
CENTER PILLAR GARNISH RH
FRONT DOOR OPENING TRIM WEATHERSTRIP RH
REAR DOOR OPENING TRIM WEATHERSTRIP RH
DECK TRIM SIDE PANEL ASSEMBLY RH
FRONT PILLAR GARNISH CORNER PIECE RH
ROOF SIDE INNER GARNISH ASSEMBLY RH
FRONT PILLAR GARNISH RH
42 (430, 31)
42 (430, 31)
REAR SEAT 3 POINT TYPE BELT ASSEMBLY RH
COWL SIDE TRIM BOARD RH
REAR DOOR SCUFF PLATE RH
FRONT DOOR SCUFF PLATE RH
LAP BELT OUTER ANCHOR COVER
FRONT SEAT OUTER BELT ASSEMBLY RH
CENTER PILLAR LOWER GARNISH RH
N*m (kgf*cm, ft.*lbf) : Specified torque
T
B132591E02

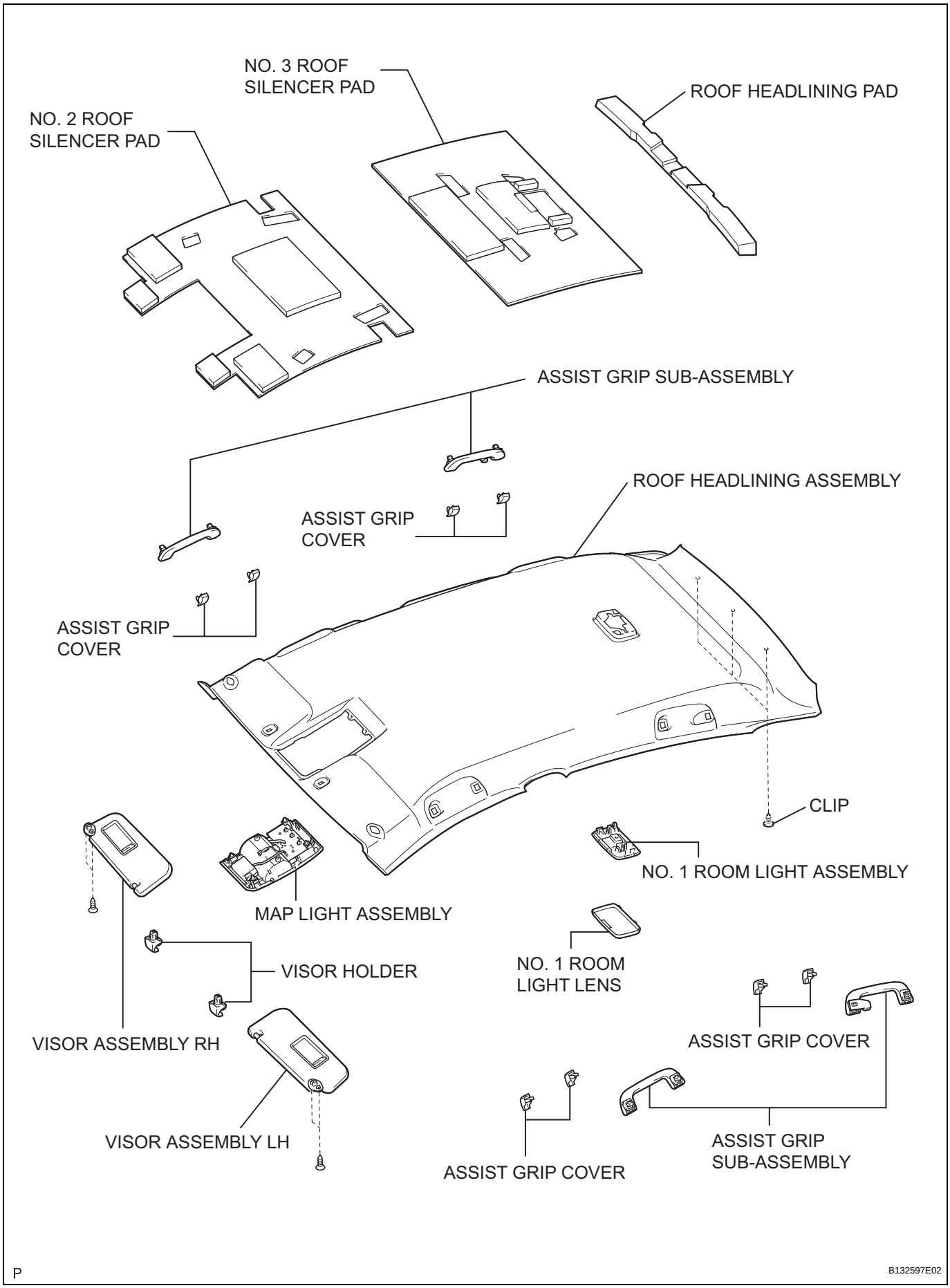
NO. 3 ROOF SILENCER PAD
ROOF HEADLINING PAD
NO. 2 ROOF SILENCER PAD
ASSIST GRIP SUB-ASSEMBLY
ROOF HEADLINING ASSEMBLY
ASSIST GRIP COVER
ASSIST GRIP COVER
CLIP
NO. 1 ROOM LIGHT ASSEMBLY
MAP LIGHT ASSEMBLY
NO. 1 ROOM LIGHT LENS
VISOR HOLDER
ASSIST GRIP COVER
VISOR ASSEMBLY RH
VISOR ASSEMBLY LH
ASSIST GRIP SUB-ASSEMBLY
ASSIST GRIP COVER
P
B132597E02

REMOVAL

1. **DISCONNECT CABLE FROM NEGATIVE BATTERY TERMINAL**
   CAUTION:
   Wait at least 90 seconds after disconnecting the cable from the negative (-) battery terminal to prevent airbag and seat belt pretensioner activation.

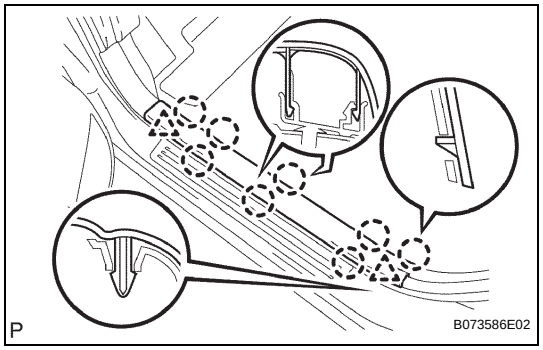

2. **REMOVE FRONT DOOR SCUFF PLATE LH**
   (a) Using a screwdriver, detach the 8 claws and 2 clips, and remove the scuff plate.
   HINT:
   Tape the screwdriver tip before use.

3. **REMOVE FRONT DOOR SCUFF PLATE RH**
   HINT:
   Use the same procedures described for the LH side.

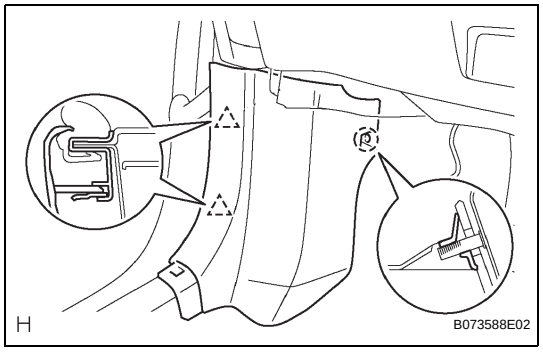

4. **REMOVE COWL SIDE TRIM BOARD LH**
   (a) Using a screwdriver, detach the claw and 2 clips, and remove the trim board.
   HINT:
   Tape the screwdriver tip before use.

5. **REMOVE COWL SIDE TRIM BOARD RH**
   HINT:
   Use the same procedures described for the LH side.

6. **REMOVE FRONT DOOR OPENING TRIM WEATHERSTRIP LH**

7. **REMOVE FRONT DOOR OPENING TRIM WEATHERSTRIP RH**

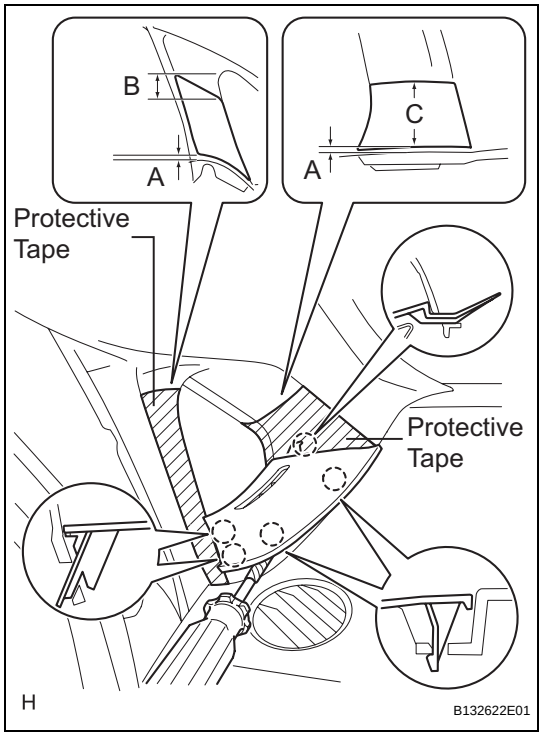

8. **REMOVE FRONT PILLAR GARNISH CORNER PIECE LH**
   (a) Put protective tape as shown in the illustration.
   Standard measurement

Area	Specified Condition
A	2.0 mm (0.079 in.)
B	10.0 mm (0.394 in.)
C	50.0 mm (1.969 in.)

   (b) Using a screwdriver, detach the 5 claws and remove the corner piece.
   HINT:
   Tape the screwdriver tip before use.

9. **REMOVE FRONT PILLAR GARNISH CORNER PIECE RH**
   HINT:
   Use the same procedures described for the LH side.

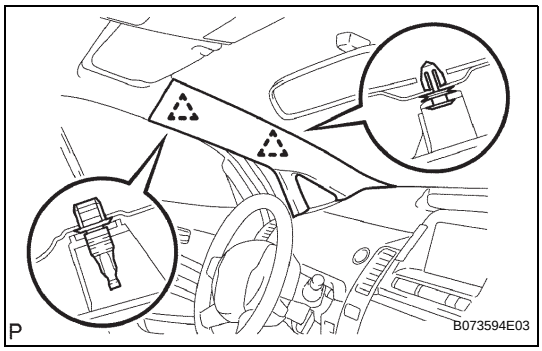

10. REMOVE FRONT PILLAR GARNISH LH

(a) w/o Curtain Shield Airbag:
Using a screwdriver, detach the 2 clips and remove the pillar garnish.
HINT:
Tape the screwdriver tip before use.

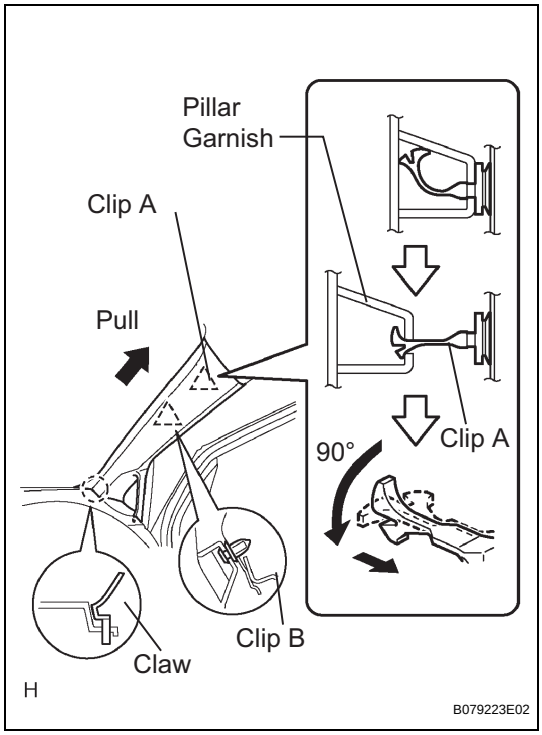

(b) w/ Curtain Shield Airbag:
Remove the pillar garnish.
(1) Pull the pillar garnish so that clip B detaches, the base of clip A detaches, and the tip of clip A locks in the pillar garnish's hole.
(2) Using needle-nose pliers, rotate clip A 90°. Then pull the pillar garnish to release the tip of clip A from the pillar garnish.
(3) Pull the pillar garnish in the direction indicated by the arrow in the illustration to detach the claw.

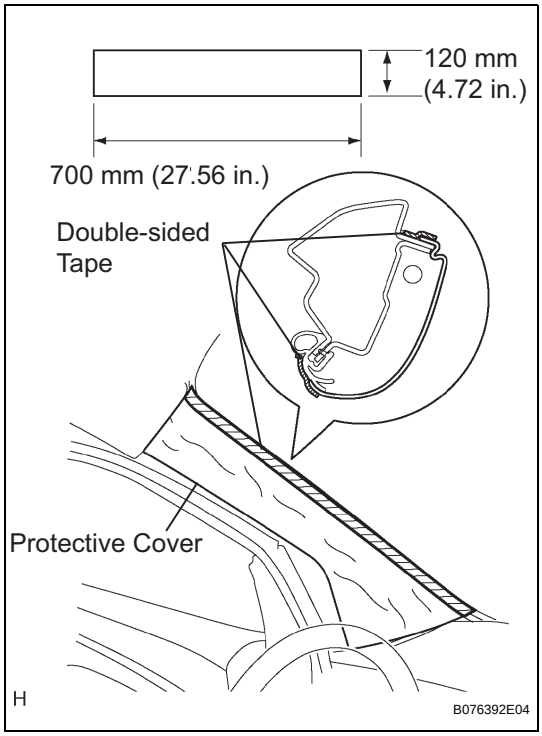

(c) w/ Curtain Shield Airbag:
Protect the curtain shield airbag LH.
(1) Thoroughly cover the airbag with cloth or nylon that is approximately 700 mm (27.56 in.) x 120 mm (4.72 in.) and fix the ends of the cover with double-sided tape, as shown in the illustration.
NOTICE:
Cover the curtain shield airbag with the protective cover as soon as the pillar garnish is removed.

11. REMOVE FRONT PILLAR GARNISH RH
HINT:
Use the same procedures described for the LH side.

12. REMOVE REAR SEAT CUSHION ASSEMBLY (See page SE-15)

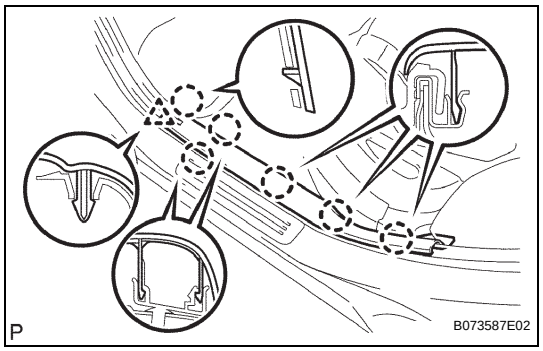

13. REMOVE REAR DOOR SCUFF PLATE LH

(a) Using a screwdriver, detach the 6 claws and clip, and remove the scuff plate.
HINT:
Tape the screwdriver tip before use.

14. REMOVE REAR DOOR SCUFF PLATE RH

HINT:
Use the same procedures described for the LH side.

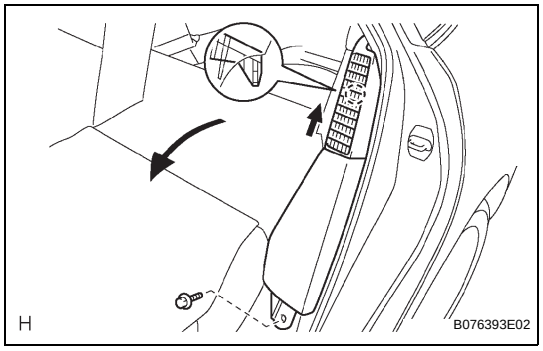

15. REMOVE REAR SIDE SEATBACK FRAME LH

(a) Remove the bolt.
(b) Detach the claw and remove the frame.

16. REMOVE REAR SIDE SEATBACK FRAME RH

HINT:
Use the same procedures described for the LH side.

17. REMOVE REAR DOOR OPENING TRIM WEATHERSTRIP LH

18. REMOVE REAR DOOR OPENING TRIM WEATHERSTRIP RH

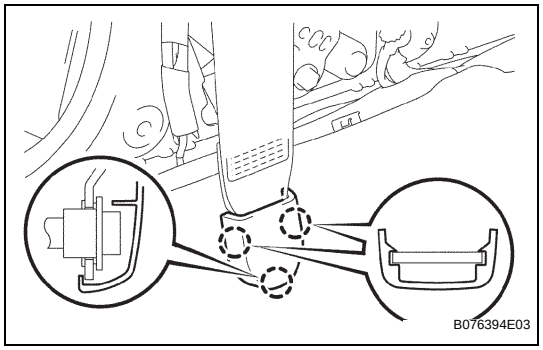

19. REMOVE LAP BELT OUTER ANCHOR COVER

(a) Using a screwdriver, detach the 3 claws and remove the anchor cover.
HINT:
Tape the screwdriver tip before use.

20. DISCONNECT FRONT SEAT OUTER BELT ASSEMBLY LH

(a) Remove the bolt and disconnect the floor anchor.

21. DISCONNECT FRONT SEAT OUTER BELT ASSEMBLY RH

(a) Remove the bolt and disconnect the floor anchor.

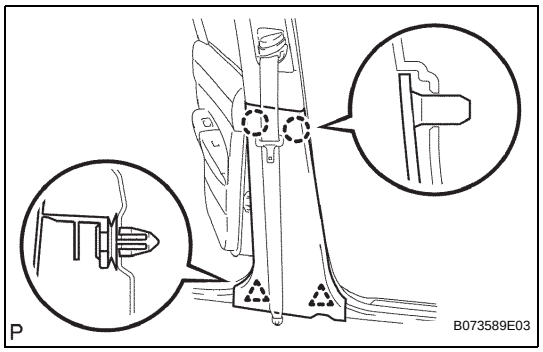

22. REMOVE CENTER PILLAR LOWER GARNISH LH

(a) Using a screwdriver, detach the 2 claws and 2 clips, and remove the lower garnish.
HINT:
Tape the screwdriver tip before use.

23. REMOVE CENTER PILLAR LOWER GARNISH RH

HINT:
Use the same procedures described for the LH side.

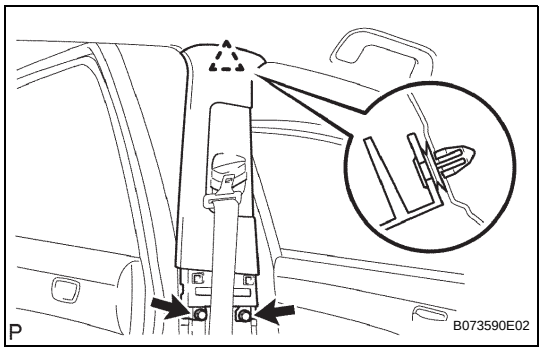

24. REMOVE CENTER PILLAR GARNISH LH
(a) Remove the 2 screws.
(b) Using a screwdriver, detach the clip and remove the pillar garnish.
HINT:
Tape the screwdriver tip before use.

25. REMOVE CENTER PILLAR GARNISH RH
HINT:
Use the same procedures described for the LH side.

26. DISCONNECT REAR SEAT 3 POINT TYPE BELT ASSEMBLY LH
(a) Remove the bolt and disconnect the floor anchor.

27. DISCONNECT REAR SEAT 3 POINT TYPE BELT ASSEMBLY RH
(a) Remove the bolt and disconnect the floor anchor.

28. REMOVE BACK DOOR WEATHERSTRIP

29. REMOVE TONNEAU COVER ASSEMBLY

30. REMOVE REAR NO. 2 FLOOR BOARD

31. REMOVE REAR NO. 3 FLOOR BOARD

32. REMOVE REAR NO. 4 FLOOR BOARD

33. REMOVE REAR DECK FLOOR BOX

34. REMOVE DECK FLOOR BOX LH

35. REMOVE REAR NO. 1 FLOOR BOARD
(a) Remove the 2 bolts and the 2 rope hooks.
(b) Using a clip remover, remove the 2 clips.
(c) Using a screwdriver, detach the 5 clips and remove the floor board.
HINT:
Tape the screwdriver tip before use.

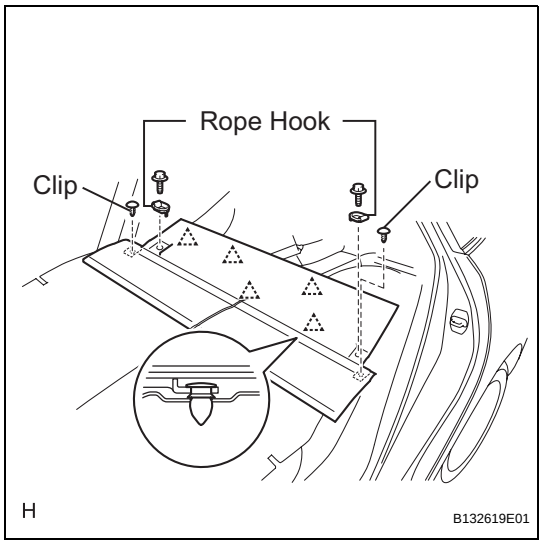

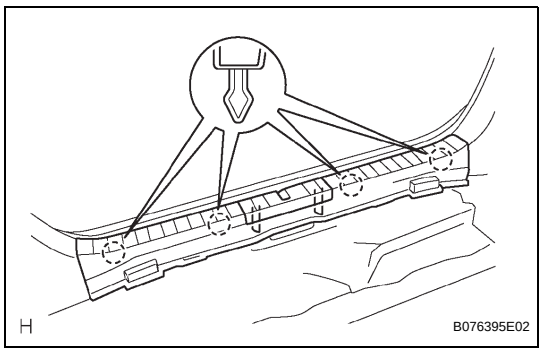

36. REMOVE REAR DECK TRIM COVER
(a) Using a screwdriver, detach the 4 claws and remove the trim cover.
HINT:
Tape the screwdriver tip before use.

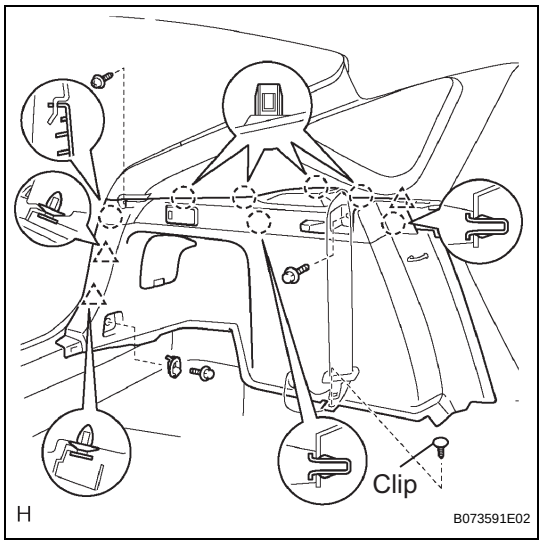

37. REMOVE DECK TRIM SIDE PANEL ASSEMBLY LH

(a) Remove the screw and 2 bolts.
(b) Using a clip remover, remove the clip.
(c) Using a screwdriver, detach the 7 claws and 3 clips, and remove the side panel.
HINT:
Tape the screwdriver tip before use.

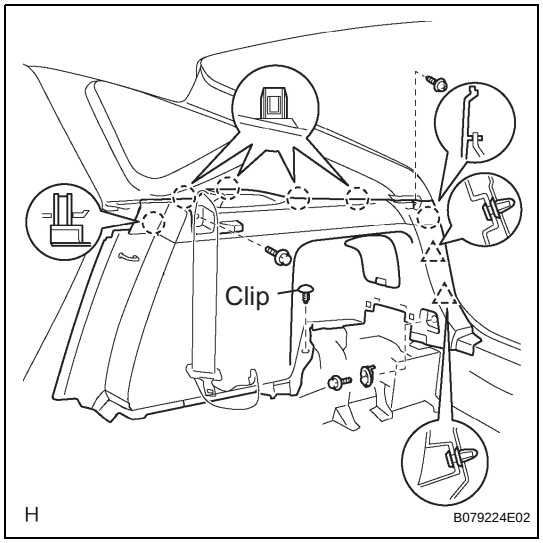

38. REMOVE DECK TRIM SIDE PANEL ASSEMBLY RH

(a) Remove the screw and 2 bolts.
(b) Using a clip remover, remove the clip.
(c) Using a screwdriver, detach the 6 claws and 2 clips, and remove the side panel.
HINT:
Tape the screwdriver tip before use.

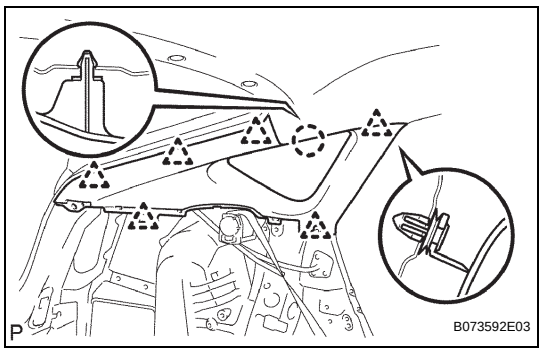

39. REMOVE ROOF SIDE INNER GARNISH ASSEMBLY LH

(a) Using a screwdriver, detach the 6 clips and claw, and remove the inner garnish.
HINT:
Tape the screwdriver tip before use.

40. REMOVE ROOF SIDE INNER GARNISH ASSEMBLY RH

HINT:
Use the same procedures described for the LH side.

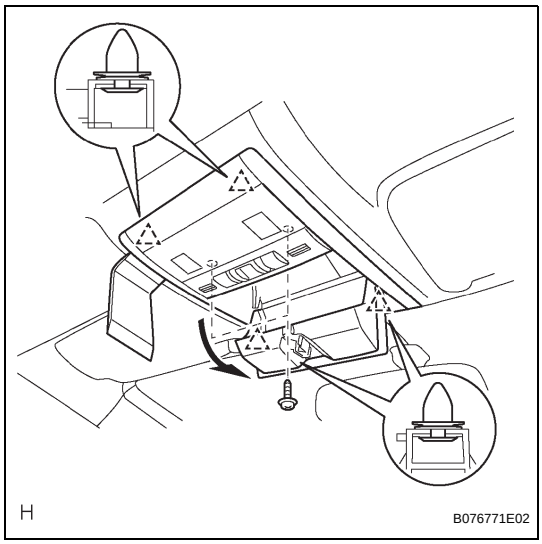

41. REMOVE MAP LIGHT ASSEMBLY

(a) Remove the 2 screws.

(b) Using a moulding remover, detach the 4 clips and remove the map light.

(c) Disconnect the map light connector.

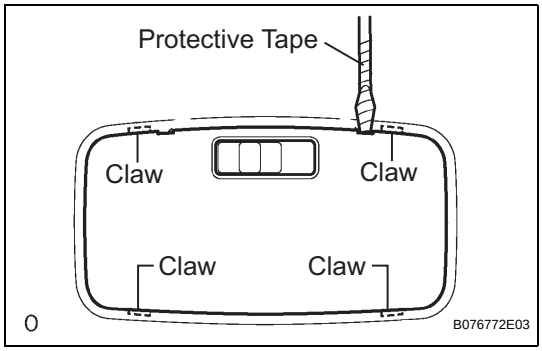

42. REMOVE NO. 1 ROOM LIGHT ASSEMBLY

(a) Using a screwdriver, detach the 4 claws and remove the room light lens.
HINT:
Tape the screwdriver tip before use.

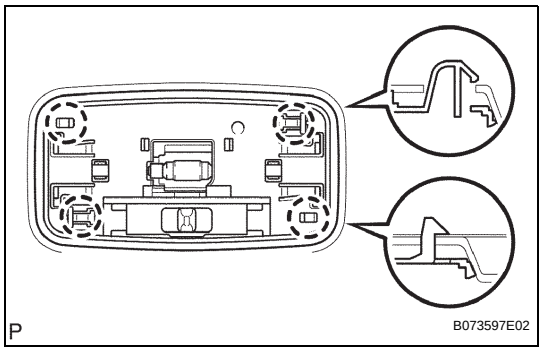

(b) Using a screwdriver, detach the 4 claws and remove the room light.
HINT:
Tape the screwdriver tip before use.

(c) Disconnect the room light connector.

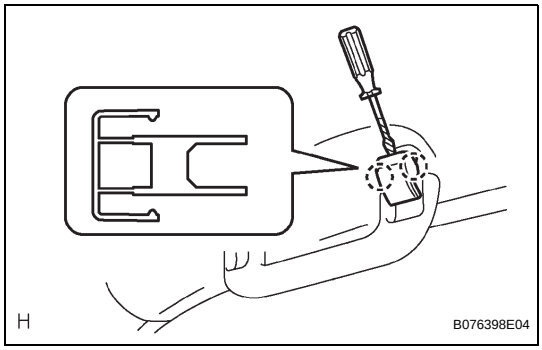

43. REMOVE ASSIST GRIP COVER

(a) Using a screwdriver, detach the 4 claws and remove the 2 covers.
HINT:
Tape the screwdriver tip before use.

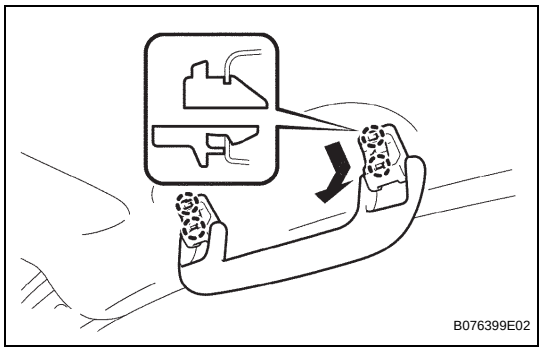

44. REMOVE ASSIST GRIP SUB-ASSEMBLY

(a) Using a screwdriver, detach the 4 claws and remove the assist grip.
HINT:
Tape the screwdriver tip before use.

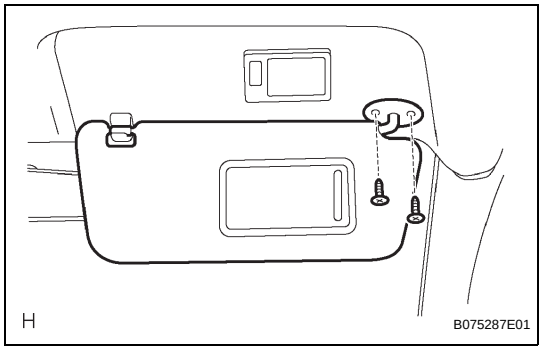

45. REMOVE VISOR ASSEMBLY LH

(a) Remove the 2 screws.
(b) Disconnect the connector and remove the visor.

46. REMOVE VISOR ASSEMBLY RH

HINT:
Use the same procedures described for the LH side.

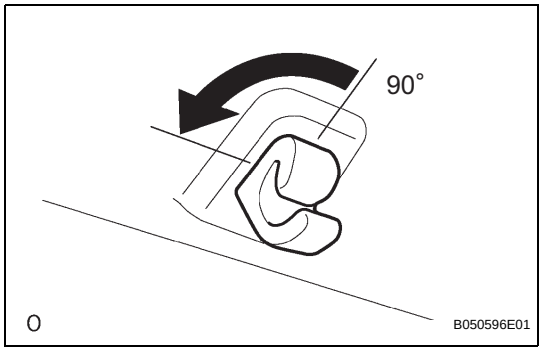

47. REMOVE VISOR HOLDER

(a) Remove the visor holder by turning it counterclockwise.

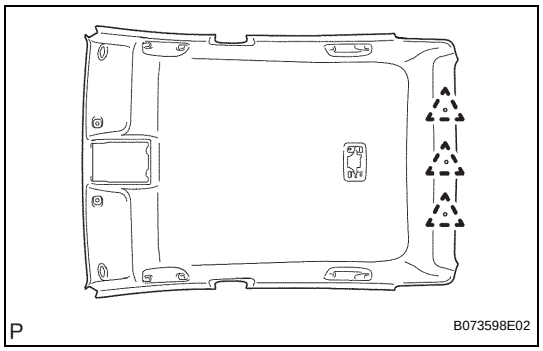

48. REMOVE ROOF HEADLINING ASSEMBLY

(a) Remove the 3 clips and headlining.
(b) Remove the silencer pads and headlining pad from the headlining.
(c) Remove the wire harness.

INSTALLATION

HINT:
A bolt without a torque specification is shown in the standard bolt chart (see page SS-2).

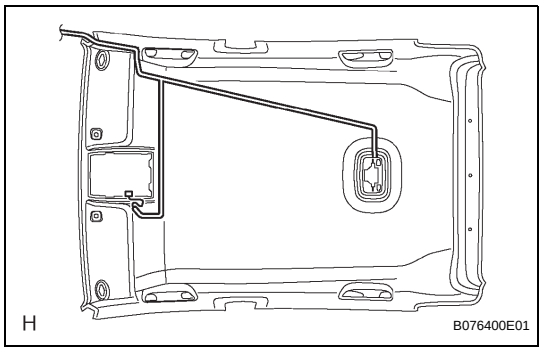

1. INSTALL ROOF HEADLINING ASSEMBLY

(a) Align the markings, and then install the wire harness with tape.
NOTICE:
Attach the roof wire harness securely.

(b) Install the silencer pads and headlining pad to the headlining.

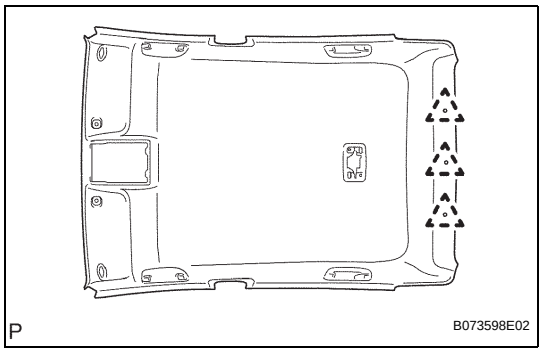

(c) Install the headlining with the 3 clips.

2. INSTALL VISOR HOLDER

(a) Install the visor holder and turn it clockwise.

3. INSTALL VISOR ASSEMBLY LH

(a) Connect the connector.

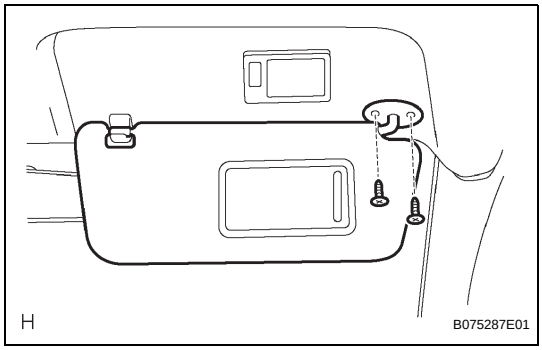

(b) Install the visor with the 2 screws.

4. INSTALL VISOR ASSEMBLY RH

HINT:
Use the same procedures described for the LH side.

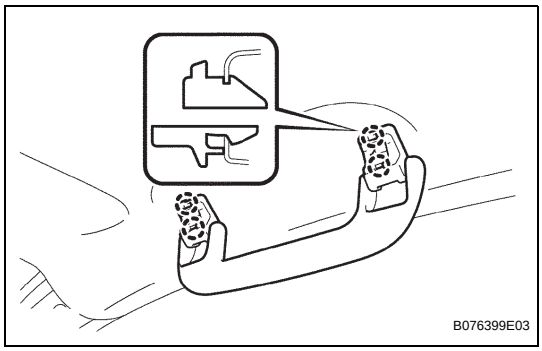

5. INSTALL ASSIST GRIP SUB-ASSEMBLY

(a) Attach the 4 claws to install the assist grip.

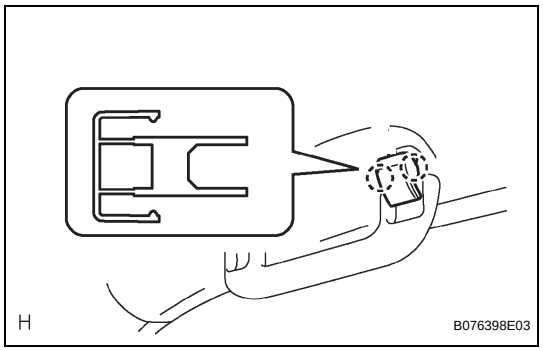

6. INSTALL ASSIST GRIP COVER

(a) Attach the 4 claws to install the 2 covers.

7. INSTALL NO. 1 ROOM LIGHT ASSEMBLY

(a) Connect the room light connector.

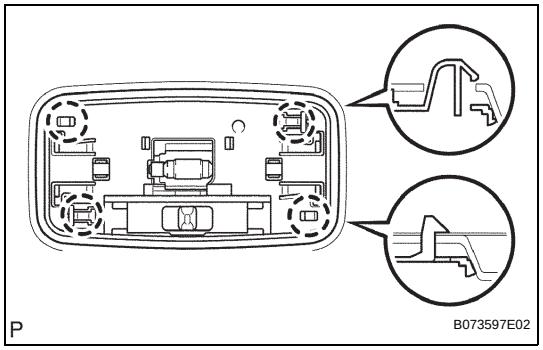

(b) Attach the 4 claws to install the room light.

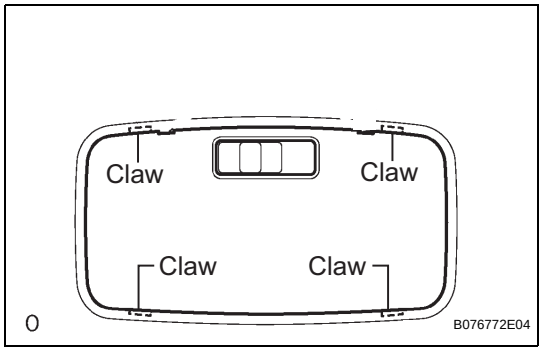

(c) Attach the 4 claws to install the room light lens.

8. INSTALL MAP LIGHT ASSEMBLY

(a) Connect the map light connector.

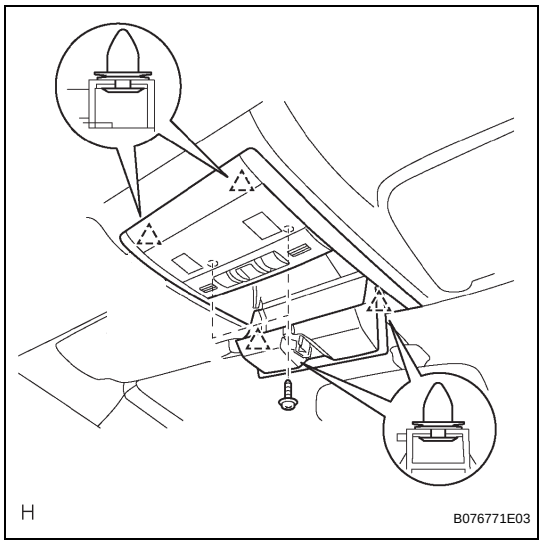

(b) Attach the 4 clips to install the map light.

(c) Install the 2 screws.

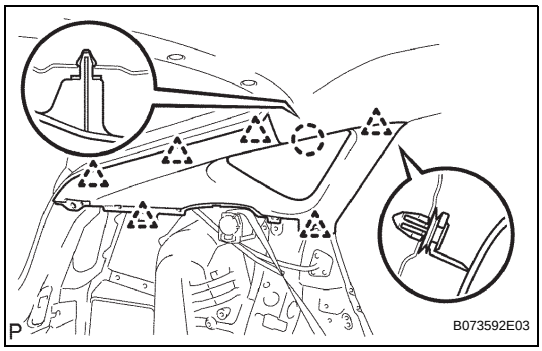

9. INSTALL ROOF SIDE INNER GARNISH ASSEMBLY LH

(a) Attach the 6 clips and claw to install the inner garnish.

10. INSTALL ROOF SIDE INNER GARNISH ASSEMBLY RH

HINT:
Use the same procedures described for the LH side.

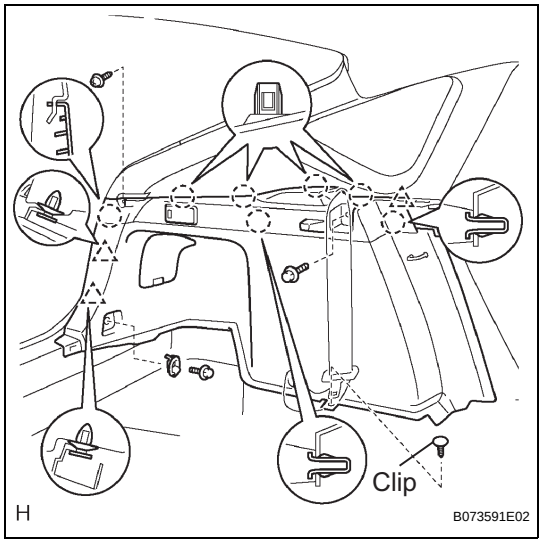

11. REMOVE DECK TRIM SIDE PANEL ASSEMBLY LH

(a) Attach the 7 claws and 3 clips to install the side panel.
(b) Install the clip, screw and 2 bolts.

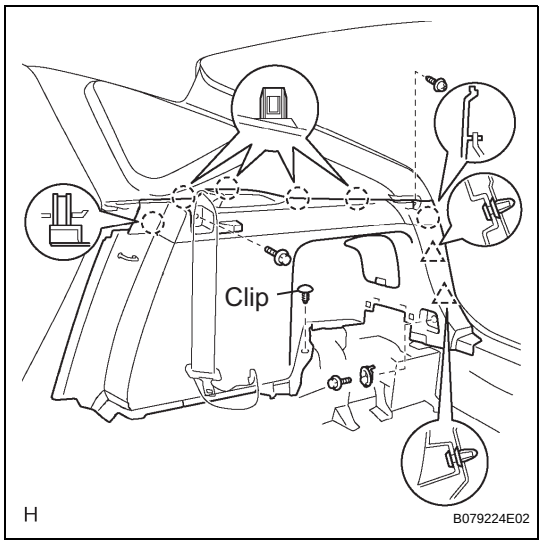

12. INSTALL DECK TRIM SIDE PANEL ASSEMBLY RH

(a) Attach the 6 claws and 2 clips to install the side panel.
(b) Install the clip, screw and 2 bolts.

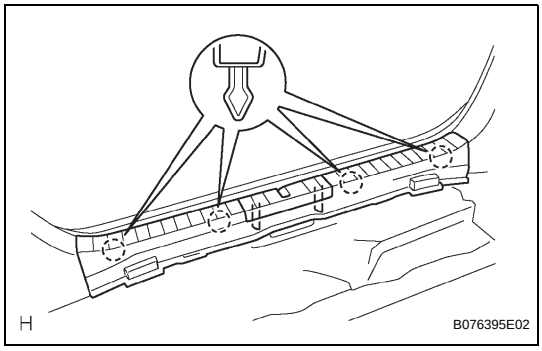

13. INSTALL REAR DECK TRIM COVER

(a) Attach the 4 claws to install the trim cover.

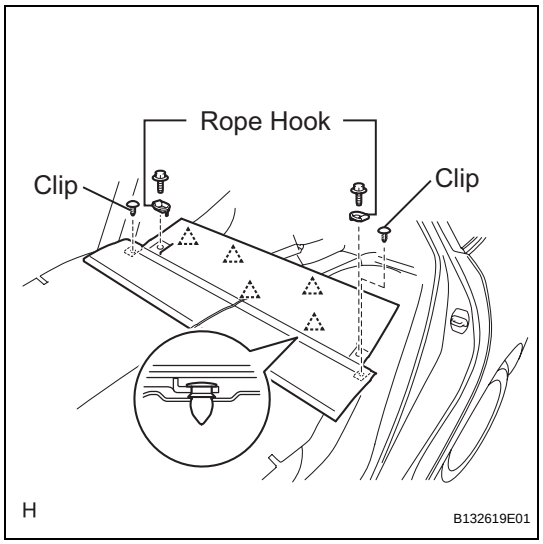

14. INSTALL REAR NO. 1 FLOOR BOARD
(a) Attach the 5 clips to install the floor board.
(b) Install the 2 clips, 2 bolts and 2 rope hooks.

15. INSTALL DECK FLOOR BOX LH

16. INSTALL REAR DECK FLOOR BOX

17. INSTALL REAR NO. 4 FLOOR BOARD

18. INSTALL REAR NO. 3 FLOOR BOARD

19. INSTALL REAR NO. 2 FLOOR BOARD

20. INSTALL TONNEAU COVER ASSEMBLY

21. INSTALL BACK DOOR WEATHERSTRIP

22. DISCONNECT REAR SEAT 3 POINT TYPE BELT ASSEMBLY LH
(a) Connect the floor anchor with the bolt.
Torque: 42 N*m (430 kgf*cm, 31 ft.*lbf)

23. DISCONNECT REAR SEAT 3 POINT TYPE BELT ASSEMBLY RH
(a) Connect the floor anchor with the bolt.
Torque: 42 N*m (430 kgf*cm, 31 ft.*lbf)

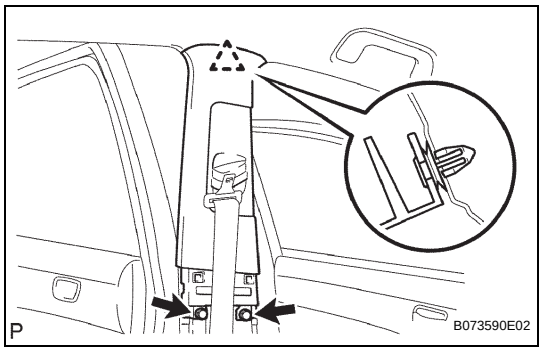

24. INSTALL CENTER PILLAR GARNISH LH
(a) Attach the clip to install the pillar garnish.
(b) Install the 2 screws.

25. INSTALL CENTER PILLAR GARNISH RH
HINT:
Use the same procedures described for the LH side.

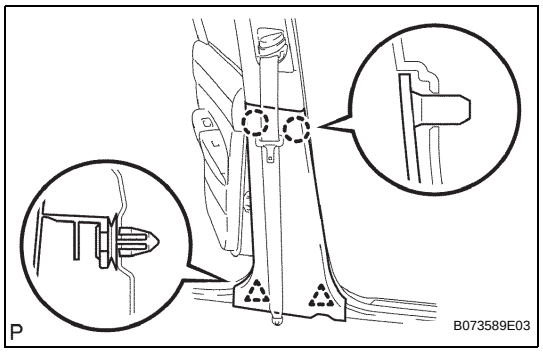

26. INSTALL CENTER PILLAR LOWER GARNISH LH
(a) Attach the 2 claws and 2 clips to the lower garnish.

27. INSTALL CENTER PILLAR LOWER GARNISH RH
HINT:
Use the same procedures described for the LH side.

28. DISCONNECT FRONT SEAT OUTER BELT ASSEMBLY RH
(a) Connect the floor anchor with the bolt.
Torque: 42 N*m (430 kgf*cm, 31 ft.*lbf)

29. DISCONNECT FRONT SEAT OUTER BELT ASSEMBLY LH
(a) Connect the floor anchor with the bolt.
Torque: 42 N*m (430 kgf*cm, 31 ft.*lbf)

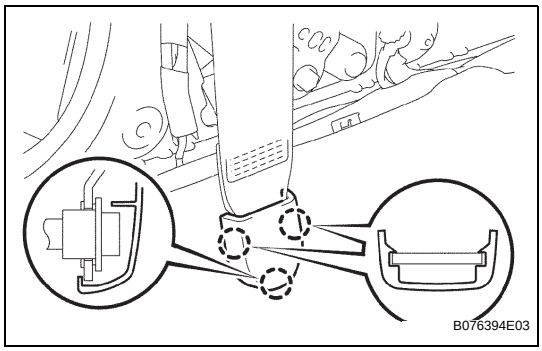

30. INSTALL LAP BELT OUTER ANCHOR COVER
(a) Attach the 3 claws to install the anchor cover.

31. INSTALL REAR DOOR OPENING TRIM WEATHERSTRIP LH

32. INSTALL REAR DOOR OPENING TRIM WEATHERSTRIP RH

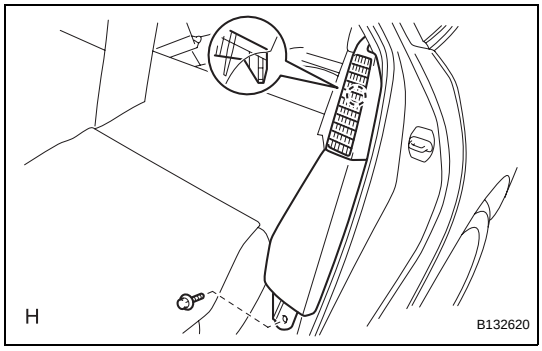

33. INSTALL REAR SIDE SEATBACK FRAME LH
(a) Attach the claw to install the frame.
(b) Install the bolt.

34. INSTALL REAR SIDE SEATBACK FRAME RH
HINT:
Use the same procedures described for the LH side.

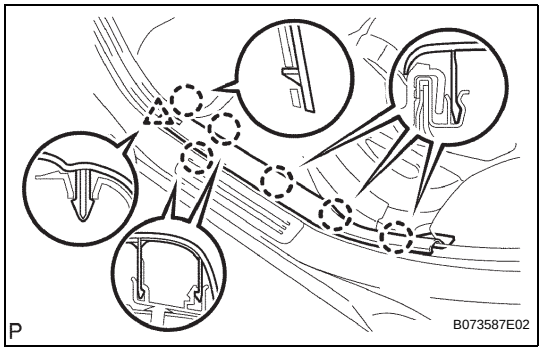

35. INSTALL REAR DOOR SCUFF PLATE LH
(a) Attach the 6 claws and clip to install the scuff plate.

36. INSTALL REAR DOOR SCUFF PLATE RH
HINT:
Use the same procedures described for the LH side.

37. INSTALL REAR SEAT CUSHION ASSEMBLY (See page SE-23)

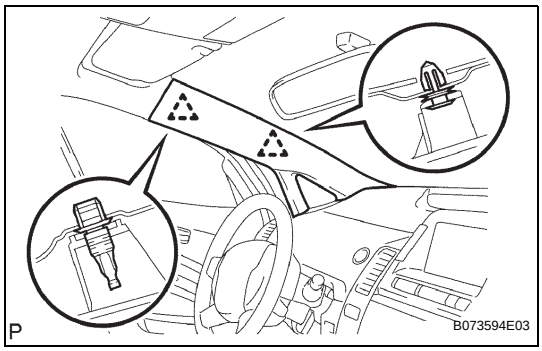

38. INSTALL FRONT PILLAR GARNISH LH
(a) w/o Curtain Shield Airbag:
Attach the 2 clips to install the pillar garnish.
(b) w/ Curtain Shield Airbag:
Remove the protective cover.

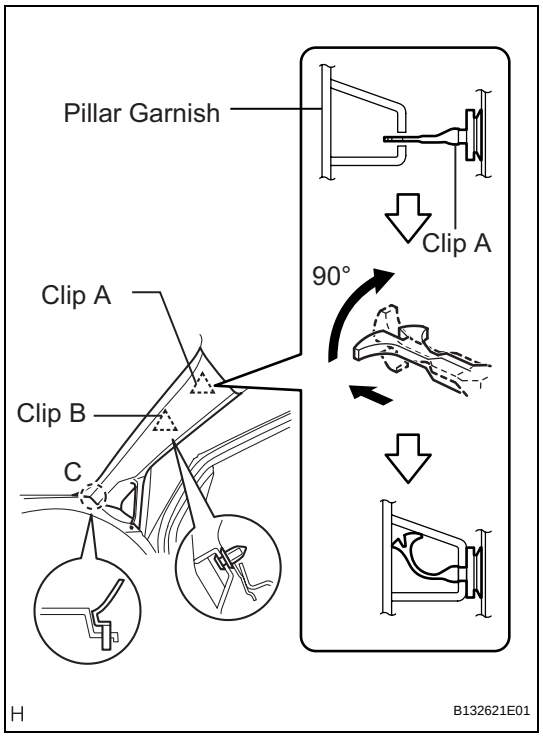

(c) w/ Curtain Shield Airbag:
Install the pillar garnish.
(1) Set the claws of the pillar garnish to the area labeled C.
(2) Insert the tip of clip A into the pillar garnish's hole.
(3) Using needle-nose pliers, rotate the tip of clip A 90°. Then push the pillar garnish toward the vehicle body to attach the base of clip A and clip B.

39. INSTALL FRONT PILLAR GARNISH RH
HINT:
Use the same procedures described for the LH side.

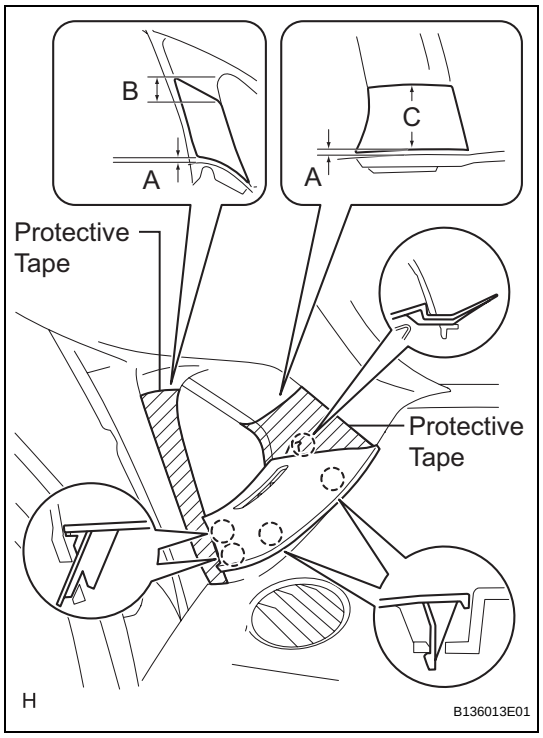

40. INSTALL FRONT PILLAR GARNISH CORNER PIECE LH
(a) Put protective tape as shown in the illustration.
Standard measurement

Area	Specified Condition
A	2.0 mm (0.079 in.)
B	10.0 mm (0.394 in.)
C	50.0 mm (1.969 in.)

(b) Attach the 5 claws to install the corner piece.

41. INSTALL FRONT PILLAR GARNISH CORNER PIECE RH
HINT:
Use the same procedures described for the LH side.

42. INSTALL FRONT DOOR OPENING TRIM WEATHERSTRIP LH

43. INSTALL FRONT DOOR OPENING TRIM WEATHERSTRIP RH

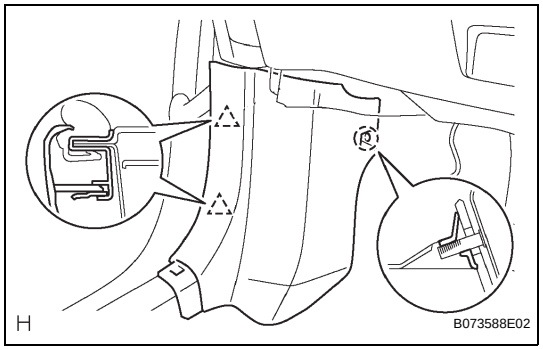

44. INSTALL COWL SIDE TRIM BOARD LH
(a) Attach the claw and 2 clips to install the trim board.

45. INSTALL COWL SIDE TRIM BOARD RH
HINT:
Use the same procedures described for the LH side.

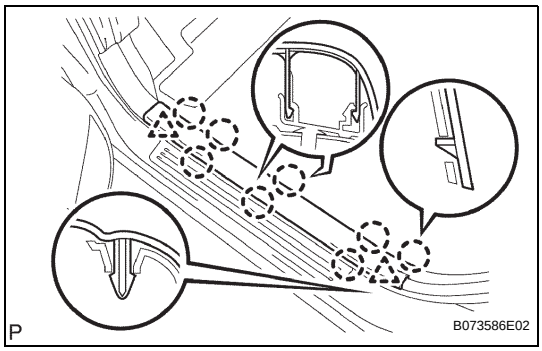

46. INSTALL FRONT DOOR SCUFF PLATE LH

(a) Attach the 8 claws and 2 clips to install the scuff plate.

47. INSTALL FRONT DOOR SCUFF PLATE RH

HINT:
Use the same procedures described for the LH side.

48. DISCONNECT CABLE FROM NEGATIVE BATTERY TERMINAL

49. PERFORM INITIALIZATION

(a) Perform initialization (see page IN-32).
NOTICE:
Certain systems need to be initialized after disconnecting and reconnecting the cable from the negative (-) battery terminal.

FUEL LID LOCK CONTROL

COMPONENTS

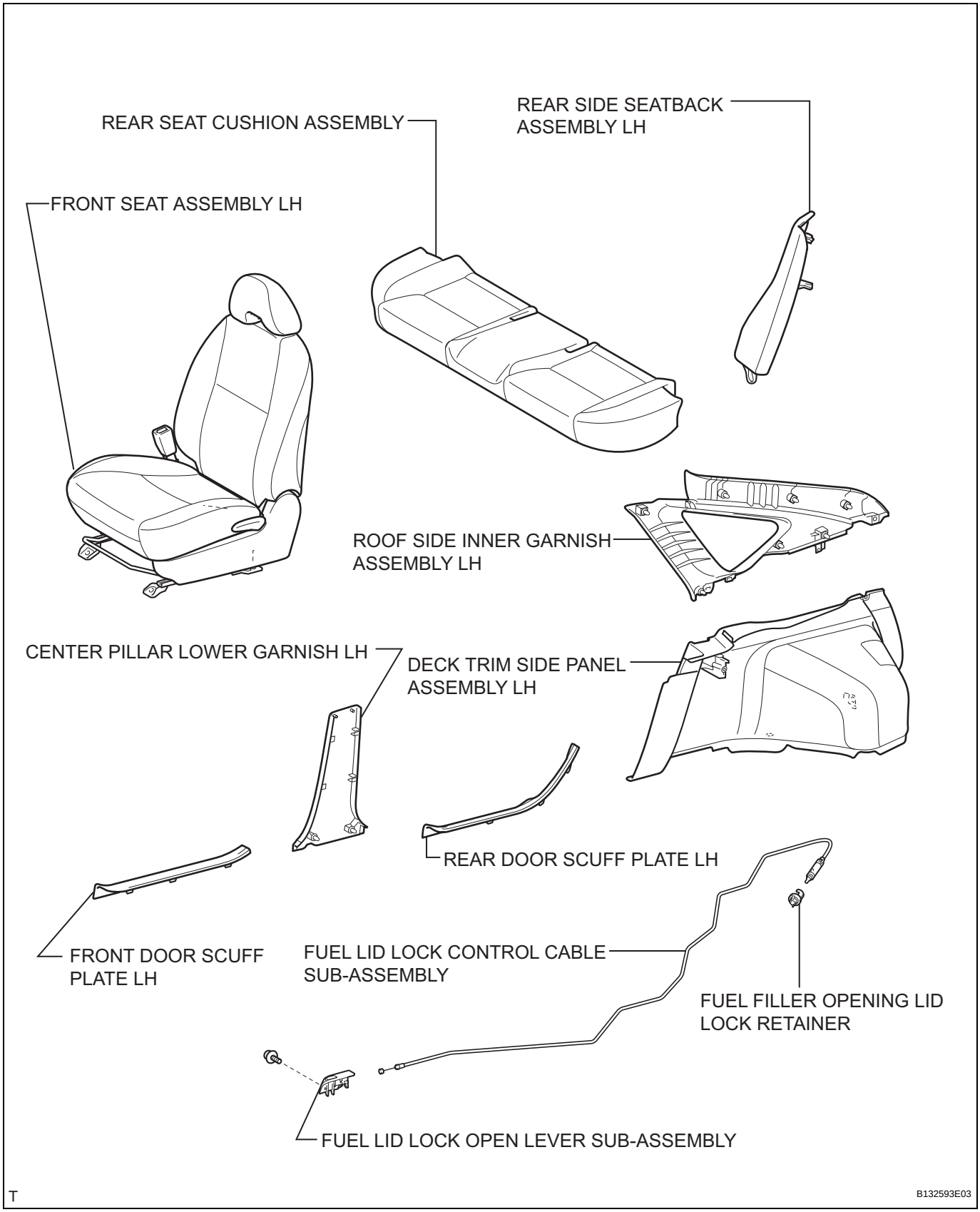

REMOVAL

1. **DISCONNECT CABLE FROM NEGATIVE BATTERY TERMINAL**
2. **REMOVE FRONT SEAT ASSEMBLY LH**
   (a) Remove the seat (see page SE-4).
3. **REMOVE REAR SEAT CUSHION ASSEMBLY (See page SE-15)**
4. **REMOVE REAR SIDE SEATBACK ASSEMBLY LH (See page SE-15)**
5. **REMOVE FRONT DOOR SCUFF PLATE LH (See page IR-7)**
6. **REMOVE REAR DOOR SCUFF PLATE LH (See page IR-9)**
7. **REMOVE CENTER PILLAR LOWER GARNISH LH (See page IR-9)**
8. **REMOVE DECK TRIM SIDE PANEL ASSEMBLY LH (See page IR-11)**
9. **REMOVE ROOF SIDE INNER GARNISH ASSEMBLY LH (See page IR-11)**
10. **REMOVE FUEL LID LOCK OPEN LEVER SUB-ASSEMBLY**
    (a) Remove the screw while holding the lever.
    (b) Disconnect the cable and remove the lever.

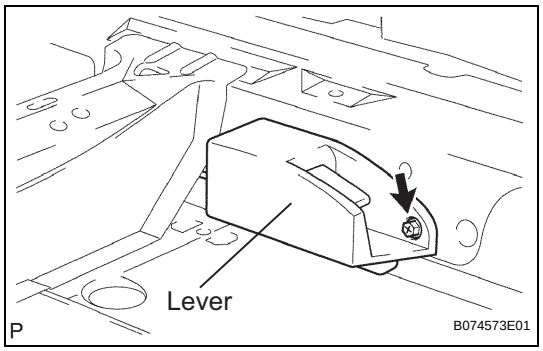

11. REMOVE FUEL LID LOCK CONTROL CABLE SUB-ASSEMBLY

(a) Disconnect the cable from the clamps at the location shown in the illustration.

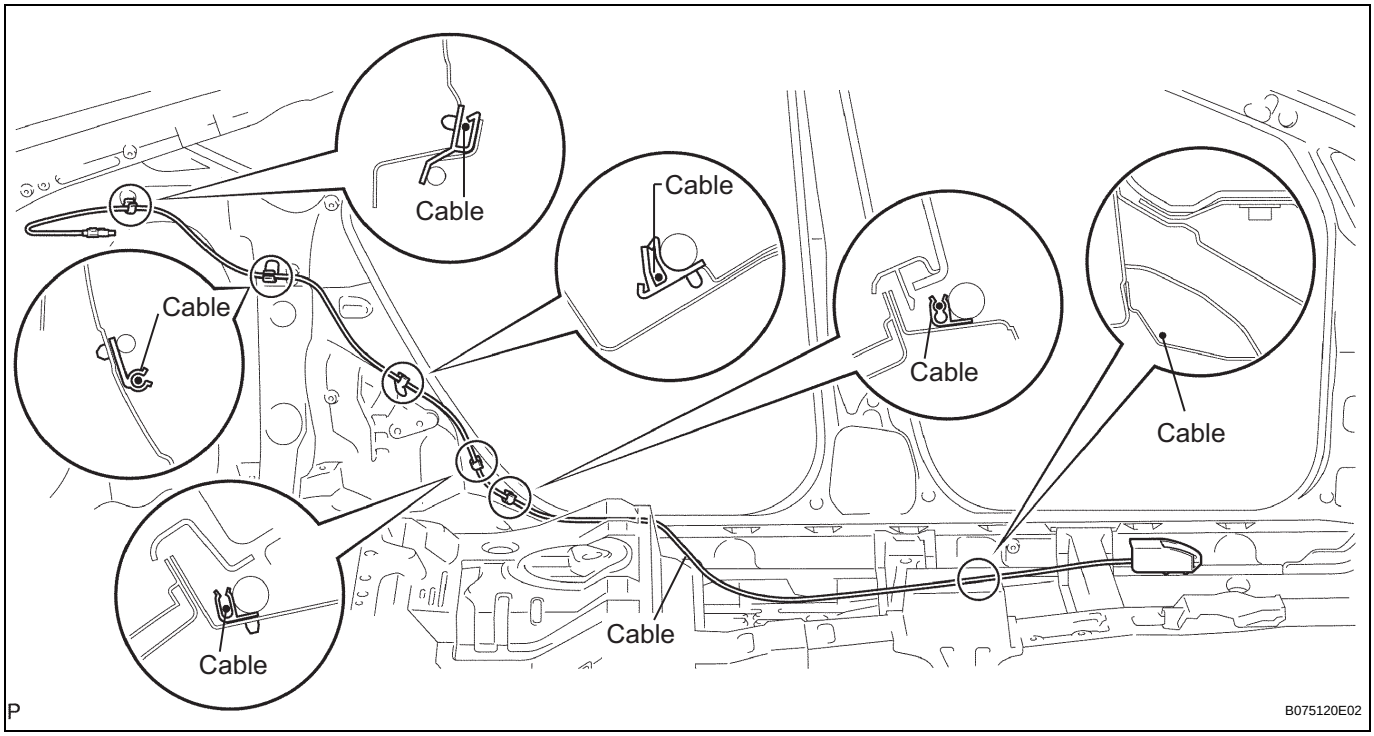

(b) Push the claw and pull out the cable.

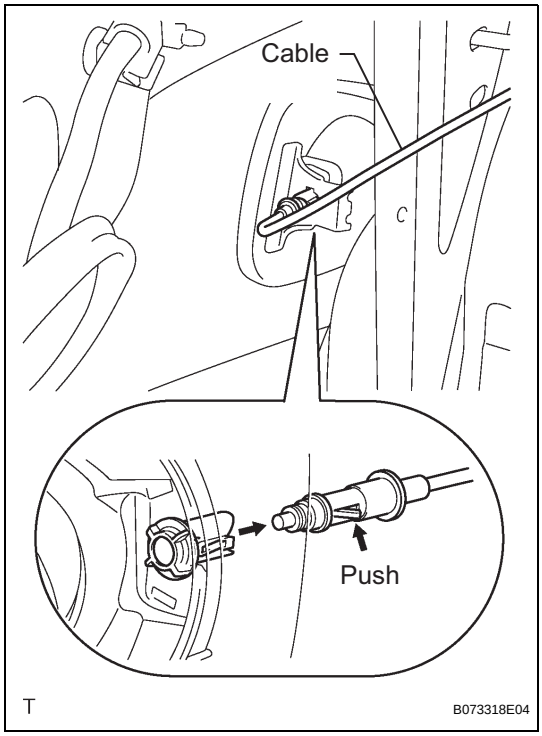

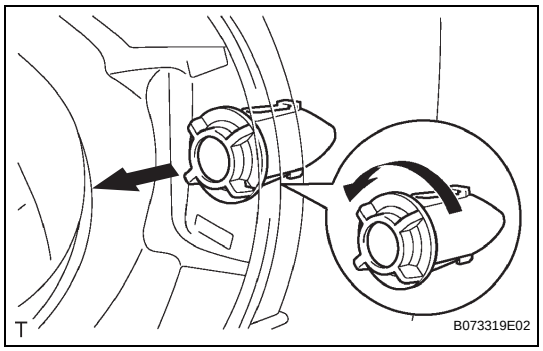

12. REMOVE FUEL FILLER OPENING LID LOCK RETAINER

(a) Turn the lock retainer counterclockwise and remove the lock retainer as shown in the illustration.

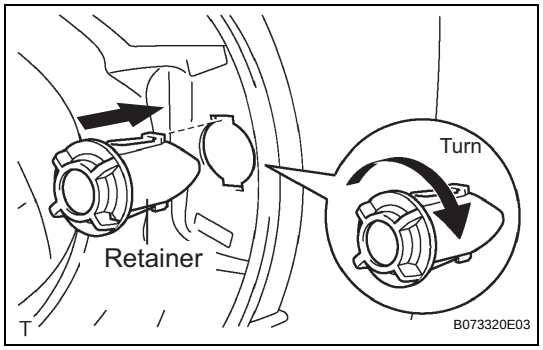

INSTALLATION

1. INSTALL FUEL FILLER OPENING LID LOCK RETAINER

(a) Install the lock retainer and turn it clockwise as shown in the illustration.

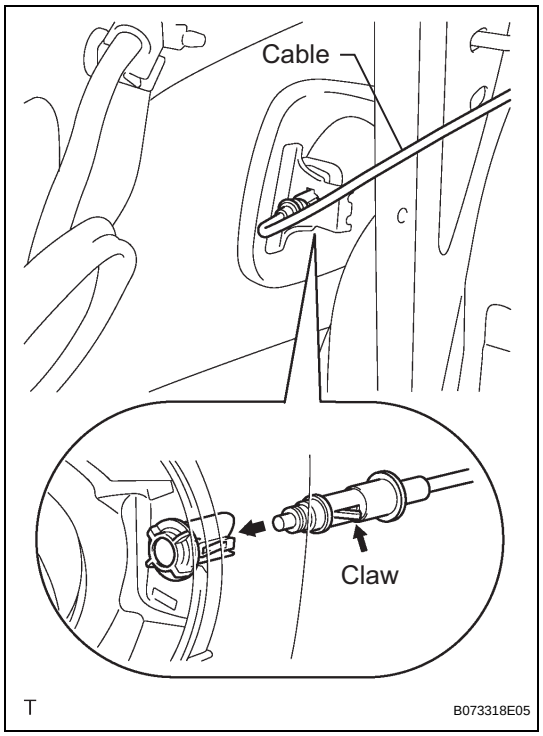

2. INSTALL FUEL LID LOCK CONTROL CABLE SUB-ASSEMBLY

(a) Attach the claw and install the cable to the lock retainer.

(b) Connect the cable from the clamps at the location shown in the illustration.

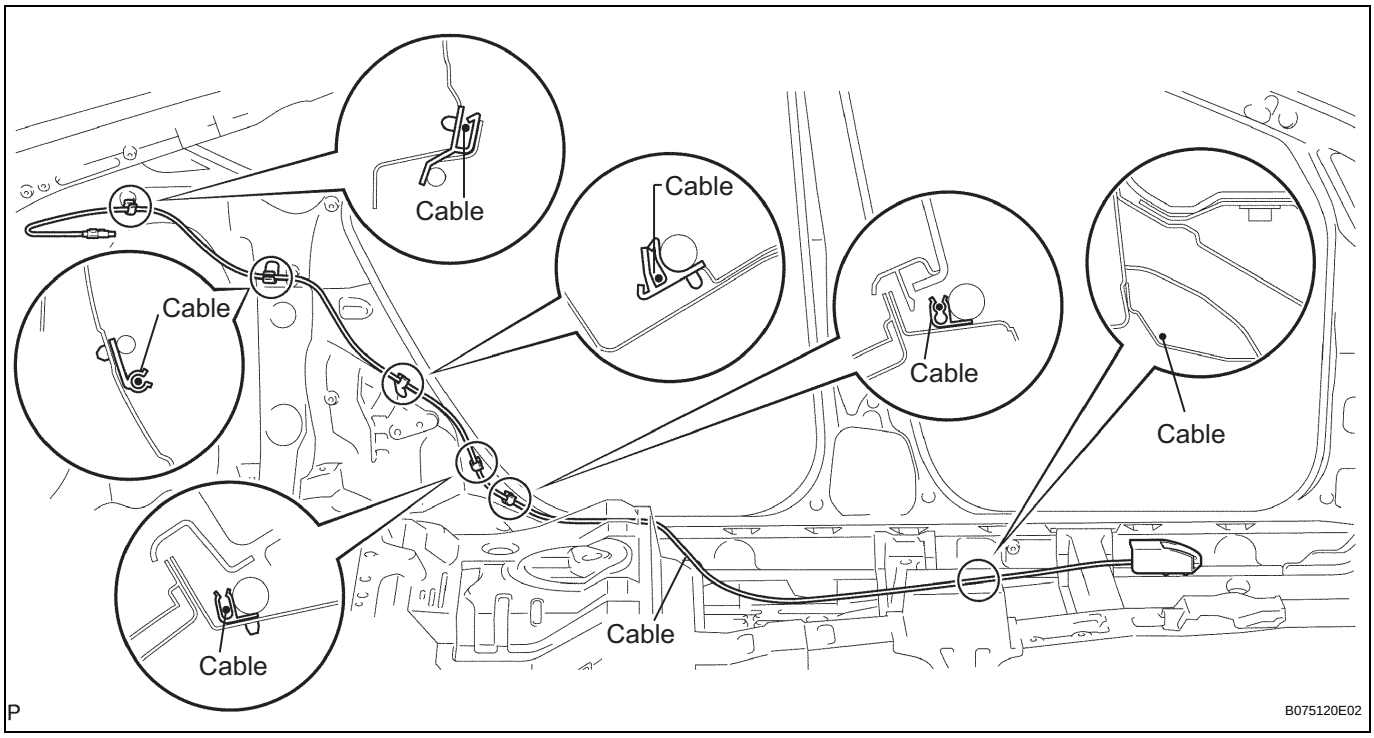

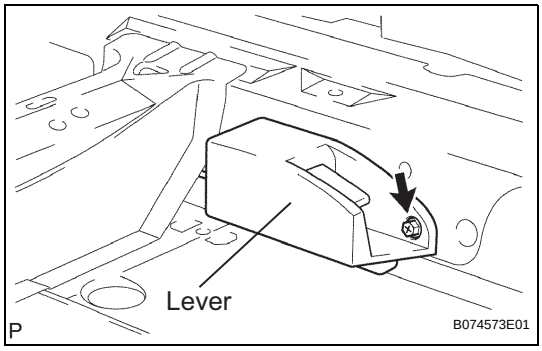

3. **INSTALL FUEL LID LOCK OPEN LEVER SUB-ASSEMBLY**
   (a) Connect the cable to the lever.
   (b) Install the lever with the screw.
4. **INSTALL ROOF SIDE INNER GARNISH ASSEMBLY LH (See page IR-15)**
5. **INSTALL DECK TRIM SIDE PANEL ASSEMBLY LH (See page IR-15)**
6. **INSTALL CENTER PILLAR LOWER GARNISH LH (See page IR-17)**
7. **INSTALL REAR DOOR SCUFF PLATE LH (See page IR-18)**
8. **INSTALL FRONT DOOR SCUFF PLATE LH (See page IR-19)**
9. **INSTALL REAR SIDE SEATBACK ASSEMBLY LH (See page SE-22)**
10. **INSTALL REAR SEAT CUSHION ASSEMBLY (See page SE-23)**
11. **INSTALL FRONT SEAT ASSEMBLY LH**
    (a) Install the seat (see page SE-10).
12. **CONNECT CABLE TO NEGATIVE BATTERY TERMINAL**

13. PERFORM INITIALIZATION

(a) Perform initialization (see page IN-32).

NOTICE:

Certain systems need to be initialized after disconnecting and reconnecting the cable from the negative (-) battery terminal.