BRAKE SYSTEM

32150–01

PRECAUTION

- **Care must be taken to replace each part properly as it could affect the performance of the brake system and result in a driving hazard. Replace the parts with parts having the same part number or equivalent.**
- **It is very important to keep parts and the area clean when repairing the brake system.**
- **When air remains in the brake line or disconnecting the brake line, bleed the air.**
- **Wash brake fluid off immediately if it adheres to any painted surface.**
- **Prevent brake fluid from adhering to electronic parts.**
- **If the vehicle is equipped with a mobile communication system, refer to the precaution in the INTRODUCTION section.**
- **When disconnecting the negative (–) battery terminal, initialize the following system after the terminal is reconnected.**

System Name	See Page
Power Window Control System	01–5

cardiagn.com

32151–01

PROBLEM SYMPTOMS TABLE

Use the table below to help find the cause of the problem. The numbers indicate the probability of the problems in descending order. Check each part in order. If necessary, replace these parts.

Symptom	Suspected Area	See page
Low pedal or spongy pedal	3. Fluid leaks for brake system	—
	4. Air in brake system	32–4
	5. Piston seals (Worn or damaged)	32–35 32–42
	6. Master cylinder (faulty)	32–24
	7. Push rod (Out of adjustment)	32–16
	8. Strike simulator cylinder (faulty)	32–32
Brake drag	1. Brake pedal free play (Minimal)	32–16
	2. Parking brake pedal travel (Out of adjustment)	33–2
	3. Parking brake cable (Sticking)	33–13 33–17
	4. Rear brake shoe clearance (Out of adjustment)	32–42
	5. Pad or lining (Cracked or distorted)	32–35 32–42
	6. Piston (Stuck)	32–35 32–42
	7. Piston (Frozen)	32–35 32–42
	8. Tension or return spring (Faulty)	32–42
	9. push rod (Out adjustment)	32–16
	10. Master cylinder (Faulty)	32–24
Brake pull	1. Piston (Stuck)	32–35 32–42
	2. Pad or lining (Oily)	32–35 32–42
	3. Piston (Frozen)	32–35 32–42
	4. Disc (Scored)	32–35
	5. Pad or lining (Cracked or distorted)	32–35

cardiagn.com

Hard pedal but brake inefficient	1. Brake pedal (Out of adjustment,faulty)	32–16
	2. Piston (Frozen)	32–35 32–42
	3. Pad or lining (Cracked or distorted)	32–35 32–42
	4. Pad or lining (Glanzed)	32–35 32–42
	5. Pad or lining (Oily)	32–35 32–42
	6. Disc (Oily)	32–35
	7. Push rod (Out of adjustment)	32–16
Noise from brakes	1. Pad or lining (Cracked or distorted)	32–35 32–42
	2. Installation bolt (Loose)	32–35
	3. Disc (Scored)	32–35
	4. Pad support plate (Loose)	32–35
	5. Sliding pin (Worn)	32–35
	6. Pad or lining (dirty)	32–35 32–42
	7. Pad or lining (Glanzed)	32–35 32–42
	8. Tension or return spring (Faulty)	32–42
	9. Anti–squeal shim (Damaged)	32–35
	10. Shoe hold–down spring (Damaged)	32–42

cardiagn.com

BRAKE FLUID

32152–01

BLEEDING

CAUTION:

Bleeding without the hand–held tester may result in the air not being completely bled. As this can result in an accident, be sure to use the hand–held tester for air bleeding.

NOTICE:

- **Move the shift lever to the P position and apply the parking brake before bleeding air.**
- **Add brake fluid carefully so that it remains between MIN and MAX lines of the reservoir while bleeding air.**
- **Brake fluid may overflow when bleeding the brake actuator hose. Do not place the fluid can on the reservoir inlet.**
- **If the pump motor operates while there is air remaining inside the brake actuator hose, the air will enter the actuator, resulting in difficulty in air bleeding. Remove the motor relay No.1 and No.2 until instructed to reinstall them in order to prevent air from coming into the brake actuator hose.**
- **Actuator pump motor and master pressure cut–off solenoid can operate through a supplemental power source even if the power switch is off.**
- **A buzzer may sound due to the accumulator pressure decline during air bleeding, however, keep on bleeding.**
- **DTCs for things such as the motor relay No.1 and No.2 malfunction and a pressure sensor malfunction are stored after bleeding. Clear the DTCs when instructed during or after bleeding.**
- **Bleed the brake actuator hose if air enters as a result of the decline of reservoir fluid.**

1. PREPARATION

(a) Move the shift lever to the P position and apply the parking brake.

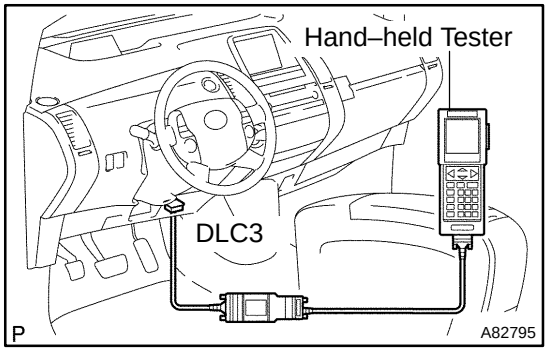

(b) Connect the hand–held tester to the DLC3 with the power switch off as shown in the illustration.

(c) Turn the power switch on (IG) and turn on the hand–held tester.

NOTICE:

Do not start the engine.

(d) Select”DIAGNOSTIC MENU””ABS/VSC””AIR BLEEDING” on the hand–held tester.

cardiagn.com

AIR BLEEDING

1. Usual
2. Actuator
3. Master Cylinder
or Stroke Simulator

Select the work No.

1 2 3

PRESS [ENTER]

(e) Select ”AIR BLEEDING”.

(1) Select ”Usual” if the front/rear brakes were removed, installed or disassembled.

HINT:

Go to ”4. BLEED FRONT AND REAR BRAKE SYSTEMS” if ”Usual” is selected.

(2) Select ”Actuator” if the actuator is removed, installed or replaced.

NOTICE:

Be sure to release the pressure out of the actuator before removing. See ”5. BLEED BRAKE ACTUATOR” for bleeding instructions.

HINT:

Go to ”5. BLEED BRAKE ACTUATOR” if ”Actuator” is selected.

(3) Select ”Master Cylinder or Stroke Simulator” if the brake master cylinder or the brake stroke simulator was removed, installed or replaced.

HINT:

Go to ”6. BLEED MASTER CYLINDER/STROKE SIMULATOR” if ”Master Cylinder or Stroke Simulator” is selected.

(f) Return to ”MENU” and bleed the air again if the display shown on the left appears during air bleeding.

FAILED

This command can
not be available.

PRESS [ENTER]

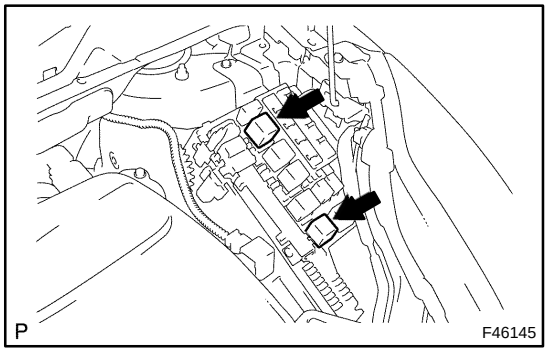

(g) Remove and install the relays as shown in the illustration if instructed to remove and install motor relays No.1 and No.2 by the hand–held tester.

cardiagn.com

2. FILL RESERVOIR WITH BRAKE FLUID

NOTICE:

Wash brake fluid off immediately if it adheres to any painted surface.

(a) Add brake fluid into the reservoir.
Fluid: SAE J1703 or FMVSS No. 116 DOT3

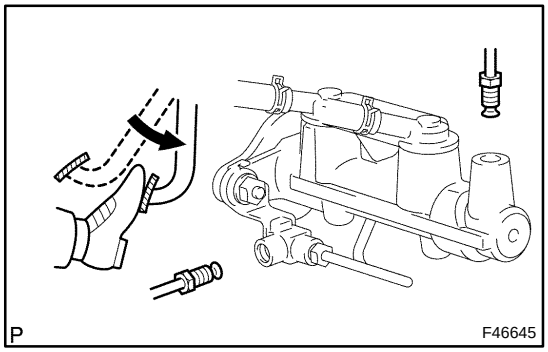

3. BLEED MASTER CYLINDER

HINT:
If the master cylinder has been disassembled or if the reservoir becomes empty, bleed the air out of the master cylinder.

(a) Disconnect the brake lines from the master cylinder.
SST 09023–00100

(b) Slowly depress and hold the brake pedal.

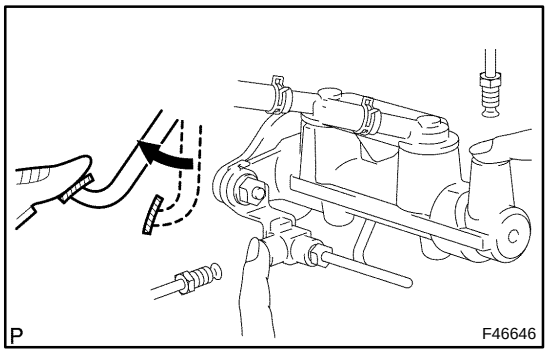

(c) Cover the outer holes with your fingers, and release the brake pedal.

(d) Repeat (b) and (c) 3 or 4 times.

(e) Connect the brake lines from the master cylinder.
SST 09023–00100
Torque: 15 N·m (155 kgf·cm, 11 ft·lbf)

OPERATION

1. Turn the IG OFF.
2. Remove the motor relays No.1 and No.2.
3. Turn the IG ON.

PRESS [ENTER]

4. BLEED FRONT AND REAR BRAKE SYSTEMS

NOTICE:

Wash brake fluid off immediately if it adheres to any painted surface.

HINT:
Bleed the air out of the front and rear brake systems in accordance with the display on the left.

(a) Remove the motor relays No.1 and No.2.

NOTICE:

- **Remove motor relays No.1 and No.2 before bleeding the air out of the front brake system.**
- **Be sure to turn the power switch off before removing motor relays No.1 and No.2.**

cardiagn.com

OPERATION

Perform the usual air bleeding for FR and FL wheels.

PRESS [ENTER]

(b) Bleed the air out of the FR/FL wheels if the display shown on the left appears.
  (1) Remove the bleeder plug cap.
  (2) Connect the vinyl tube to the bleeder plug.
  (3) Depress the brake pedal several times, then loosen the bleeder plug with the pedal depressed.
  (4) When the fluid stops coming out, tighten the bleeder plug, and then release the brake pedal.
  Torque: 8.4 N·m (86 kgf·cm, 74 in.·lbf)
  (5) Repeat (3) and (4) until all the air in the fluid is completely bled out.
  (6) Install the bleeder plug cap.
  (7) Repeat the previous procedures to bleed the air out of the brake line for each wheel.

OPERATION

1. Turn the IG OFF.
2. Install the motor relays No.1 and No.2.
3. Turn the IG ON.

PRESS [ENTER]

(c) Install the motor relays No.1 and No.2.

NOTICE:

- **Install motor relays No.1 and No.2 before bleeding the air out of the rear brake system.**
- **Be sure to turn the power switch off before installing motor relays No.1 and No.2.**

OPERATION

Hold the brake pedal depressed and loosen the bleeder plug of RL wheel until all the air in the fluid is completely bled out.

PRESS [ENTER]

(d) Bleed the air out of the RL wheel if the display shown on the left appears.
  (1) Remove the bleeder plug cap of RL wheel.
  (2) Connect the vinyl tube to the bleeder plug of RL wheel.
  (3) Depress the brake pedal and loosen the bleeder plug of RL wheel until all the air in the fluid is completely bled out.

NOTICE:

Do not pump the brake pedal. Hold the brake pedal depressed when bleeding the air out of the rear brake systems.

HINT:

The actuator motor relay starts operation and oil pressure is applied to the rear brake systems if the brake pedal is depressed, which allows air bleeding through the bleeder plug.

  (4) Tighten the bleeder plug if the air is completely bled out.
  Torque: 8.4 N·m (86 kgf·cm, 74 in.·lbf)

cardiagn.com

OPERATION

Hold the brake pedal depressed and loosen the bleeder plug of RR wheel until all the air in the fluid is completely bled out.

PRESS [ENTER]

(e) Bleed the air out of the RR wheel if the display shown on the left appears.
  (1) Remove the bleeder plug cap of RR wheel.
  (2) Connect the vinyl tube to the bleeder plug of RR wheel.
  (3) Depress the brake pedal and loosen the bleeder plug of RR wheel until all the air in the fluid is completely bled out.

NOTICE:
Do not pump the brake pedal. Hold the brake pedal depressed when bleeding the air out of the rear brake systems.
HINT:
The actuator motor relay starts operation and oil pressure is applied to the rear brake systems if the brake pedal is depressed, which allows air bleeding through the bleeder plug.

Air Bleeding is COMPLETE.

PRESS [ENTER]

(f) The air bleeding of the front and rear brake system finishes if the display shown on the left appears.

INFORMATION

Do you wish to refresh the high pressure line?

This operation will take 20 seconds.

PRESS [ENTER]

5. BLEED BRAKE ACTUATOR

NOTICE:
Wash brake fluid off immediately if it adheres to any painted surface.
HINT:
Bleed the air out of the brake actuator in accordance with the display on the left.
(a) Refresh the high pressure line.

NOTICE:
Be sure to perform this procedure before replacement, removal or installation of the actuator.
HINT:
- Decrease the internal pressure by performing this procedure.
- Count down from 20 seconds.

cardiagn.com

OPERATION

1. Turn the IG OFF.
2. Remove the motor relays No.1 and No.2
3. Turn the IG ON.
4. Confirm ABS pump motor runs and stops.

PRESS [ENTER]

(b) Follow the procedures shown on the display on the left.

NOTICE:

Be sure to remove motor relays No.1 and No.2 before removing the actuator for replacement, removal or installation.

OPERATION

Perform the usual air bleeding for FR and FL wheels.

PRESS [ENTER]

(c) Follow the procedures shown on the display on the left.

HINT:

See ”4. BLEED FRONT AND REAR BRAKE SYSTEMS” for bleeding the air out of the front brake system.

INFORMATION

Do you wish to bleed the air out of the drain line?

This command activates solenoids (SLRFR, SLRFL, SLRRR and SLRRL).

PRESS [ENTER]

(d) Bleed the air out of the drain line.

NOTICE:

Be sure to perform this procedure if air remains in the actuator hose.

HINT:

Fluid inside the actuator hose returns to the reservoir tank when performing this procedure.

cardiagn.com

OPERATION

1. Depress the brake pedal 30 times in 30 seconds.
2. Turn the IG OFF.
3. Install the motor relays No.1 and No.2
4. Turn the IG ON.

PRESS [ENTER]

(e) Depress the brake pedal 30 times within 30 seconds while the solenoid is operating.

HINT:
The solenoid stops operation automatically after approximately 30 seconds.

(f) Install the motor relays No.1 and No.2.

NOTICE:

- **Install motor relays No.1 and No.2 before bleeding the air out of the rear brake system.**
- **Be sure to turn the power switch off before installing motor relays No.1 and No.2.**

OPERATION

Hold the brake pedal depressed and loosen the bleeder plug of RL wheel until all the air in the fluid is completely bled out.

PRESS [ENTER]

(g) Bleed the air out of the rear brake RL wheel.

HINT:
See ”4. BLEED FRONT AND REAR BRAKE SYSTEMS” for bleeding the air out of the rear brake system.

OPERATION

Hold the brake pedal depressed and loosen the bleeder plug of RR wheel until all the air in the fluid is completely bled out.

PRESS [ENTER]

(h) Bleed the air out of the rear brake RR wheel.

HINT:
See ”4. BLEED FRONT AND REAR BRAKE SYSTEMS” for bleeding the air out of the rear brake system.

cardiagn.com

OPERATION

Loosen the bleeder plug of FL wheel.

PRESS [ENTER]

(i) Loosen the bleeder plug of FL wheel.

INFORMATION

Do you wish to bleed the air out of the power supply line?

This command activates solenoids (SMC2 and SLAFL).

PRESS [ENTER]

(j) Bleed the air out of the power supply line.
HINT:
Air can be bled out of the high pressure line inside the actuator when performing this procedure.

OPERATION

Tighten the bleeder plug of FL wheel.

PRESS [ENTER]

(k) Tighten the bleeder plug of FL wheel.
Torque: 8.4 N·m (86 kgf·cm, 74 in.·lbf)

cardiagn.com

INFORMATION
(*/2)

Do you wish to
bleed the air out
of the stroke
simulator line?

This command
activates solenoids
(SMC2 and SCSS).

PRESS [ENTER]

(l) Bleed the air out of the stroke simulator line.

HINT:

- See ”6. BLEED BRAKE MASTER CYLINDER/STROKE SIMULATOR” for bleeding the air out of the stroke simulator.
- Bleed the air out of the stroke simulator twice.
- The number of times air is bled is displayed as 1/2 (first) and 2/2 (second).

OPERATION
(*/2)

Depress the brake
pedal 20 times in
20 seconds.

PRESS [ENTER]

(1) Depress the brake pedal 20 times in 20 seconds.

HINT:

Depress the brake pedal 20 times at 1 second intervals, holding the pedal down on the last time.

OPERATION
(*/2)

Perform the usual
air bleeding for
FL wheel.

PRESS [ENTER]

(2) Perform the usual air bleeding for FL wheel.

HINT:

- Loosen the bleeder plug of the FL wheel and bleed the air with the brake pedal depressed.
- See ”4. BLEED FRONT AND REAR BRAKE SYSTEMS” for bleeding instructions.

cardiagn.com

INFORMATION
(*/5)

Do you wish to
refresh the
high pressure line?

This operation
will take
20 seconds.

PRESS [ENTER]

(m) Refresh the high pressure line.

NOTICE:

Keep the fluid inside the reservoir above the ”LOW” level by replenishing.

HINT:

- Accumulator pressure is released and accumulated repeatedly, which circulates the fluid inside the accumulator when performing this procedure.
- The high pressure line is refreshed 5 times. The number of times refreshed is displayed as 1/5 (first), 2/5 (second) and so on.
- Count down from 20 seconds.

OPERATION
(*/5)

1. Turn the IG OFF,
and ON again.
2. Confirm the ABS
motor pump runs and
stops.

PRESS [ENTER]

(n) Turn the power switch off. Turn the power switch on (IG) and check if the ABS motor pump runs and stops.

HINT:

The pump motor rotates and the accumulator is pressurized every time turning the power switch from off to on (IG).

(o) Return to ”MENU”.

OPERATION

1. Turn the IG OFF.
2. Remove the motor
relays No.1 and
No.2.
3. Turn the IG ON.

PRESS [ENTER]

6. BLEED MASTER CYLINDER/STROKE SIMULATOR

NOTICE:

Wash brake fluid off immediately if it adheres to any painted surface.

HINT:

Bleed the air out of the master cylinder/stroke simulator in accordance with the display shown on the left.

(a) Remove the motor relays No.1 and No.2.

NOTICE:

- **Remove motor relays No.1 and No.2 before bleeding the air out of the front brake system.**
- **Be sure to turn the power switch off before removing motor relays No.1 and No.2.**

cardiagn.com

OPERATION

Perform the usual
air bleeding for
FR and FL wheels.

PRESS [ENTER]

(b) Bleed the air out of the FR/FL wheels in accordance with the display shown on the left.

HINT:

- Air can be completely bled out of the master cylinder by performing this procedure.
- See ”4. BLEED FRONT AND REAR BRAKE SYSTEMS” for bleeding instructions.

OPERATION

1. Turn the IG OFF.
2. Install the motor relays No.1 and No.2.
3. Turn the IG ON.

PRESS [ENTER]

(c) Install the motor relays No.1 and No.2.

NOTICE:

- **Install motor relays No.1 and No.2 before bleeding the air out of the stroke simulator.**
- **Be sure to turn the power switch off before installing motor relays No.1 and No.2.**

INFORMATION
(*/2)

Do you wish to
bleed the air out
of the stroke
simulator line?

This command
activates solenoids
(SMC2 and SCSS).

PRESS [ENTER]

(d) Bleed the air out of the stroke simulator line.

HINT:

- Bleed the air out of the stroke simulator twice.
- The number of times air is bled is displayed as 1/2 (first) and 2/2 (second).

cardiagn.com

OPERATION (*/2) Depress the brake pedal 20 times in 20 seconds. PRESS [ENTER]

(1) Depress the brake pedal 20 times in 20 seconds.

HINT:
Depress the brake pedal 20 times at 1 second intervals, holding the pedal down on the last time.

OPERATION (*/2) Perform the usual air bleeding for FL wheel. PRESS [ENTER]

(2) Perform the usual air bleeding for FL wheel.

HINT:
- Loosen the bleeder plug of the FL wheel and bleed the air with the brake pedal depressed.
- See ”4. BLEED FRONT AND REAR BRAKE SYSTEMS” for bleeding instructions.

Air Bleeding is COMPLETE. PRESS [ENTER]

(e) The air bleeding of the master cylinder/stroke simulator finishes if the display shown on the left appears.

7. CHECK AND CLEAR DTC (SEE PAGE 05–975)

cardiagn.com

BRAKE PEDAL

ADJUSTMENT

32153–01

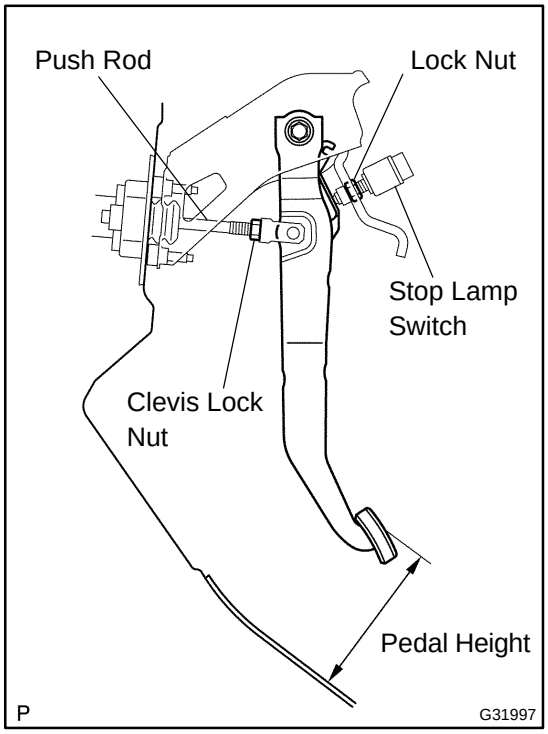

1. CHECK AND ADJUST BRAKE PEDAL HEIGHT

NOTICE:

Pull up the floor carpet and dash panel insulator assy, and then check and adjust the brake pedal height.

(a) Remove instrument panel finish panel LWR (see page 71–13).

(b) Inspect brake pedal height.

Pedal height from the top of the asphalt sheet: 138 to 148 mm (5.433 to 5.827 in.)

(c) Adjust brake pedal height.

(1) Disconnect the connector from the stop lamp switch.

(2) Loosen the stop lamp switch lock nut. Turn the switch in order to give the pedal some free play.

(3) Loosen the clevis lock nut. Turn the push rod and adjust the pedal height.

(4) Tighten the clevis lock nut.

Torque: 26 N·m (265 kgf·cm, 19 ft·lbf)

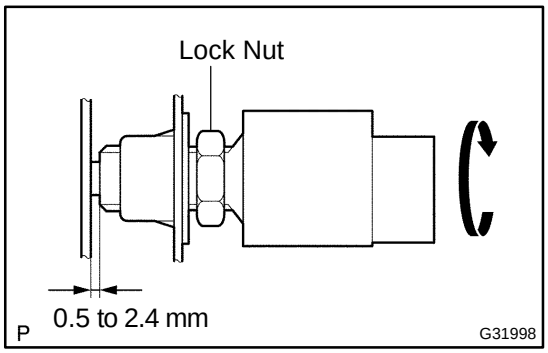

(5) Turn the stop lamp switch so that the clearance between its thread portion tip and the area where the pedal makes contact is between 0.5 to 2.4 mm (0.020 to 0.095 in.). Tighten the lock nut.

Torque: 26 N·m (265 kgf·cm, 19 ft·lbf)

(6) Connect the connector to the stop lamp switch.

(7) Connect the hand–held tester to the DLC3.

(8) Loosen the stroke sensor set bolts.

cardiagn.com

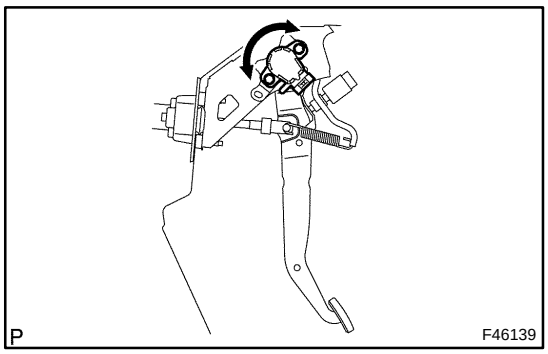

(9) Turn the power switch on. Read the stroke sensor 1 value displayed on the date monitor using the hand–held tester. Slowly turn the stroke sensor to the right and left to adjust it to the standard value.

Standard value: 0.8 to 1.2 V

(10) Tighten the stroke sensor set bolts.

Torque: 9.3 N·m (95 kgf·cm, 82 in.·lbf)

CAUTION:

Do not depress the brake pedal after the power switch turns on.

(11) Carry out system initialization (see page 05–958).

(d) Install instrument panel finish panel LWR.

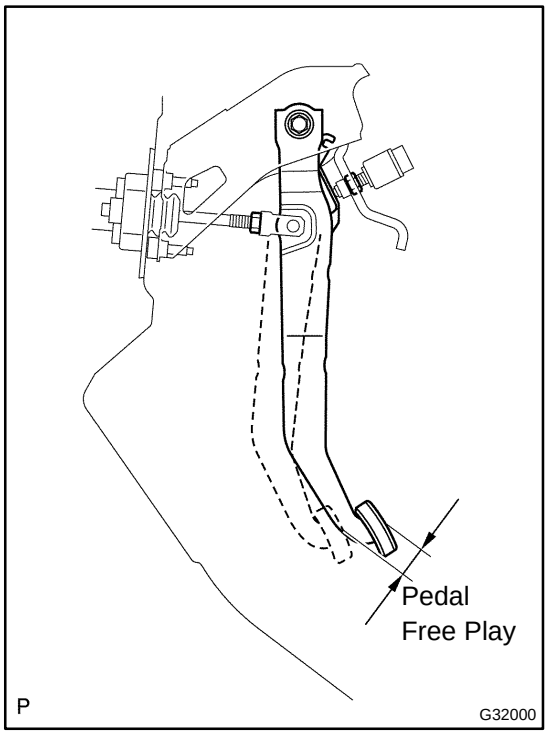

2. CHECK PEDAL FREE PLAY

(a) Depress the brake pedal several times strongly after the engine stops.

(b) Check the brake pedal free play.

Pedal free play: 0.5 to 4 mm (0.02 to 0.16 in.)

If incorrect, proceed to the following step.

(1) Check the stop lamp switch clearance.

Stop lamp switch clearance:
0.5 to 2.4 mm (0.020 to 0.095 in.)

If the clearance is OK, then troubleshoot the brake system.
If incorrect, adjust the stop lamp switch clearance.

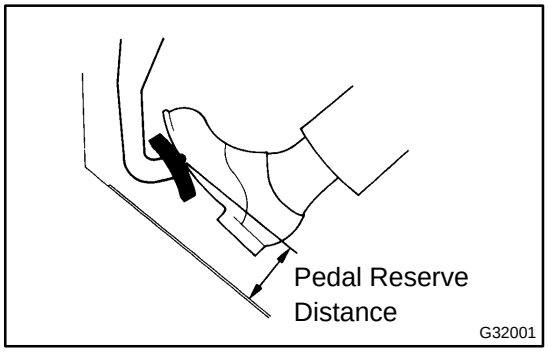

3. CHECK PEDAL RESERVE DISTANCE

(a) Release the parking brake pedal.

(b) With engine running, depress the pedal and measure the pedal reserve distance, as shown in the illustration.

Pedal reserve distance from the top of the asphalt sheet:

196 N (20 kgf, 44.1 lbf): More than 104 mm (4.1 in.)

NOTICE:

Pull up the floor carpet and dash panel insulator assy, and then check the brake pedal reserve distance.

If incorrect, troubleshoot the brake system.

cardiagn.com

32154–01

COMPONENTS

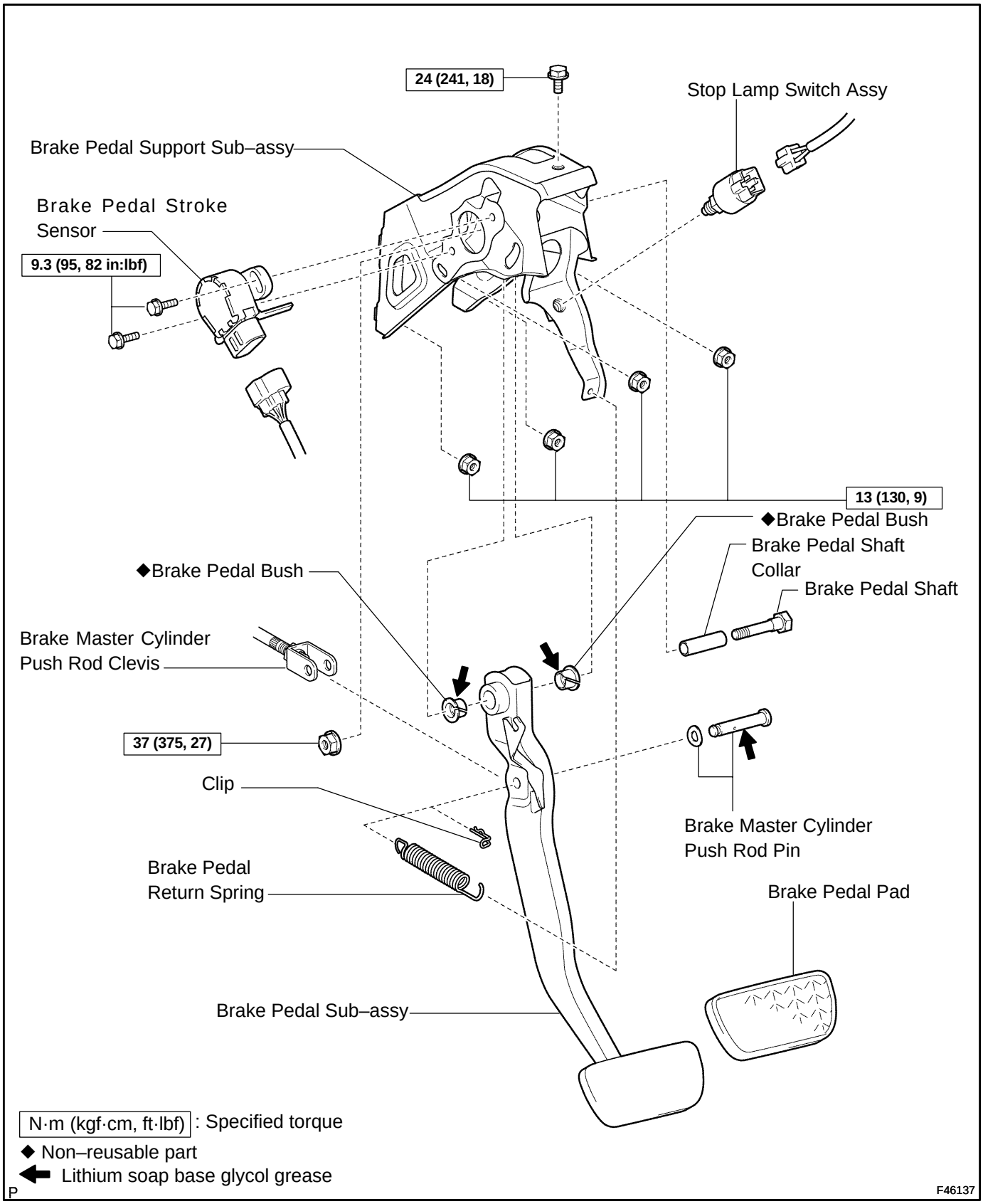

cardiagn.com

32155–01

OVERHAUL

1. DISCONNECT BATTERY NEGATIVE TERMINAL

2. REMOVE INSTRUMENT PANEL SUB–ASSY W/PASSENGER AIRBAG ASSY (SEE PAGE 71–7)

HINT:

Refer to the procedures from the removal of the instrument panel register assy No.1 up until the removal of the instrument panel sub–assy w/ passenger airbag assy.

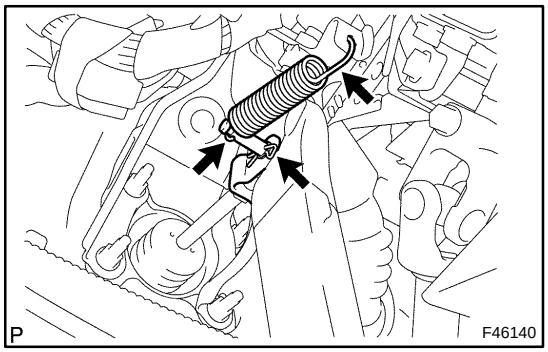

3. REMOVE MASTER CYLINDER PUSH ROD CLEVIS

(a) Remove the brake pedal return spring.

(b) Remove the clip and brake master cylinder push rod pin.

(c) Separate the push rod clevis from the brake pedal sub–assy.

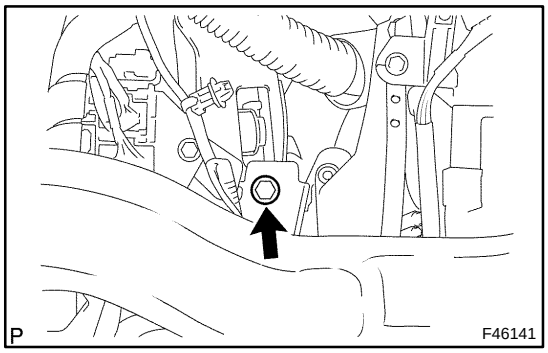

4. REMOVE BRAKE PEDAL SUPPORT SUB–ASSY

(a) Disconnect the connector from the stop lamp switch assy.

(b) Disconnect the connector from the brake pedal stroke sensor.

(c) Remove the bolt from the instrument panel upper panel side.

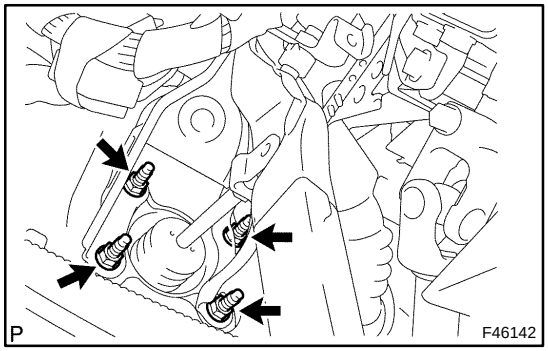

(d) Remove the 4 nuts and the brake pedal support sub–assy.

5. REMOVE BRAKE PEDAL PAD

cardiagn.com

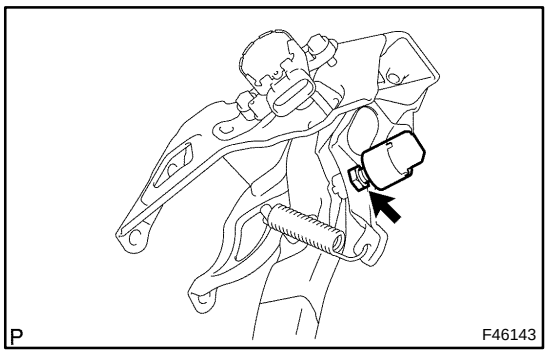

6. REMOVE STOP LAMP SWITCH ASSY

(a) Loosen the stop lamp switch lock nut and remove the stop lamp switch assy from the brake pedal support sub–assy.

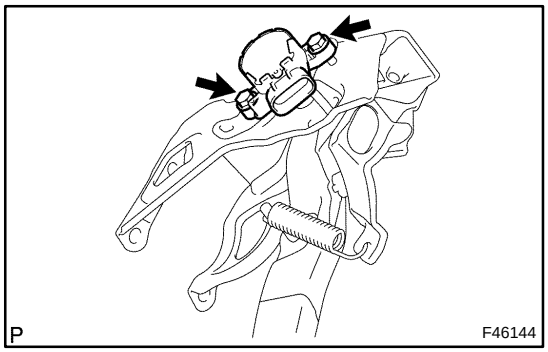

7. REMOVE BRAKE PEDAL STROKE SENSOR ASSY

(a) Remove the 2 bolts and separate the brake pedal stroke sensor from the brake pedal support sub–assy.

8. REMOVE BRAKE PEDAL SUB–ASSY

(a) Remove the nut from the brake pedal shaft.
(b) Remove the brake pedal shaft and separate the brake pedal from the brake pedal support sub–assy.
(c) Remove the 2 brake pedal bushes from the brake pedal sub–assy.
(d) Remove the brake pedal shaft collar from the brake pedal shaft.

9. INSTALL BRAKE PEDAL SUB–ASSY

(a) Apply lithium soap base glycol grease to the 2 new brake pedal bushes. Install the brake pedal bushes to the brake pedal sub–assy.
(b) Install the brake pedal shaft collar to the brake pedal shaft.
(c) Install the brake pedal to the brake pedal support with the brake pedal shaft and a nut.
Torque: 37 N·m (375 kgf·cm, 27 ft·lbf)

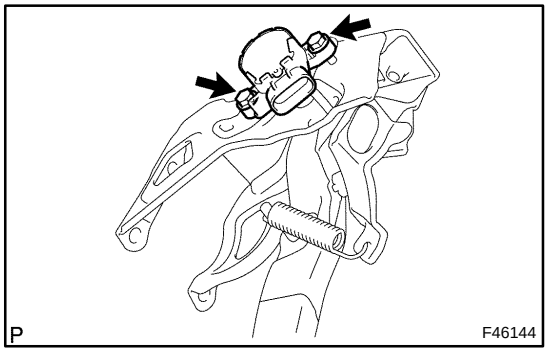

10. INSTALL BRAKE PEDAL STROKE SENSOR ASSY

(a) Install the brake pedal stroke sensor to the brake pedal support sub–assy with the 2 bolts.

HINT:
Tighten the bolts when checking and adjusting the brake pedal height.

cardiagn.com

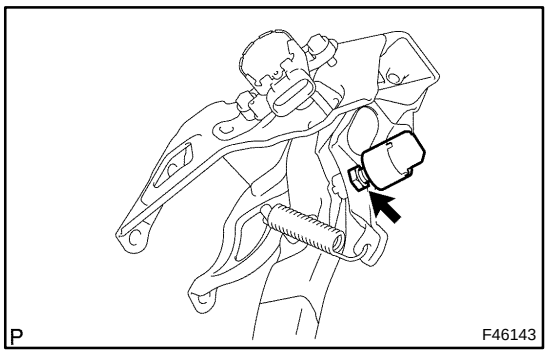

11. INSTALL STOP LAMP SWITCH ASSY

(a) Turn the stop lamp switch assy clockwise and install it to the brake pedal support sub–assy.

HINT:

Tighten the lock nut when checking and adjusting the brake pedal height.

12. INSTALL BRAKE PEDAL PAD

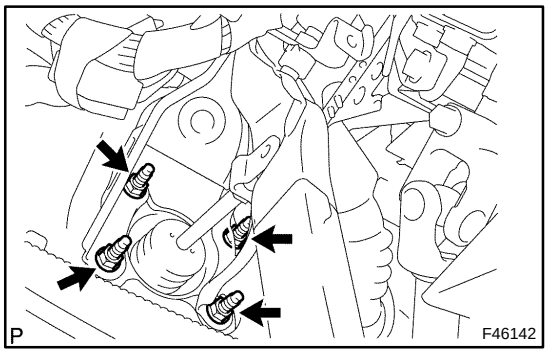

13. INSTALL BRAKE PEDAL SUPPORT SUB–ASSY

(a) Install the brake pedal support with the 4 nuts.
Torque: 13 N·m (130 kgf·cm, 9 ft·lbf)

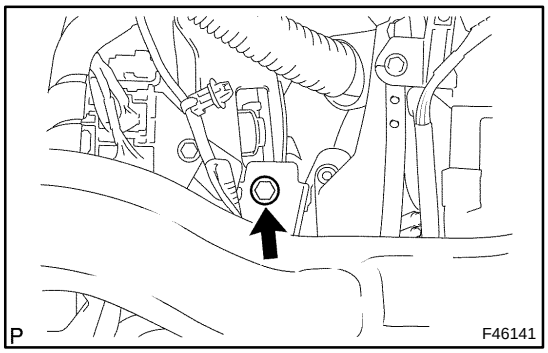

(b) Install the brake pedal support from the instrument panel side with a bolt.
Torque: 24 N·m (241 kgf·cm, 18 ft·lbf)

(c) Connect the connector to the stop lamp switch assy.

(d) Connect the connector to the brake pedal stroke.

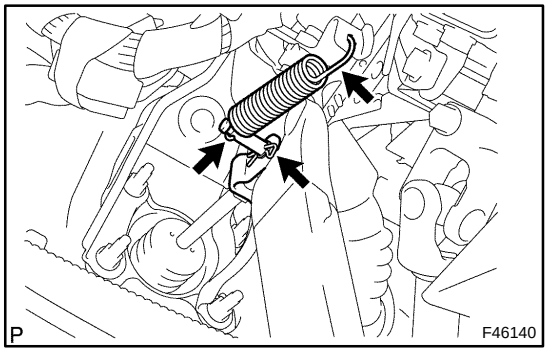

14. INSTALL MASTER CYLINDER PUSH ROD CLEVIS

(a) Apply lithium soap base glycol grease to the circumference of the brake master cylinder push rod pin.

(b) Install the push rod clevis to the brake pedal with the brake master cylinder push rod pin.

(c) Install the clip and brake pedal return spring.

15. INSTALL INSTRUMENT PANEL SUB–ASSY W/PASSENGER AIRBAG ASSY

16. CHECK AND ADJUST BRAKE PEDAL HEIGHT (SEE PAGE 32–16)

17. CHECK PEDAL FREE PLAY (SEE PAGE 32–16)

18. CHECK PEDAL RESERVE DISTANCE (SEE PAGE 32–16)

cardiagn.com

BRAKE MASTER CYLINDER SUB–ASSY

32156–01

ON–VEHICLE INSPECTION

NOTICE:

The DTC may be stored after inspection. Be sure to clear the DTC and check that a normal system code is output after the inspection is finished.

1. INSPECT BRAKE MASTER CYLINDER

(a) Check battery voltage

Standard Value: 10 to 14 V (during engine stop)

(b) Connect hand–held tester and pedal effort gauge

(1) Connect the pedal effort gauge.

(2) Move the shift lever to the P position. Apply the parking brake and connect the hand–held tester to the DLC3.

(3) Turn the power switch on (IG).

(4) Clear the DTC (see page 05–975).

(c) Check operation w/o brake booster

(1) Check and adjust brake pedal height (see page 32–16).

(2) Check pedal free play (see page 32–16).

(3) Check pedal reserve distance (see page 32–16).

(4) Turn on the hand–held tester and select ”ECB INVALID” to prohibit the brake control (ECB).

(5) Monitor ”MAS CYL PRS 1”, ”MAS CYL PRS 2”, ”PEDAL STROKE” and ”PEDAL STROKE 2” using the hand–held tester.

(6) Check the value output from ”MAS CYL PRS 1”, ”MAS CYL PRS 2”, ”PEDAL STROKE” and ”PEDAL STROKE 2” by depressing the brake pedal.

Standard Value:

Pedal Effort N (kgf, lbf)	MAS CYL PRS 1 (V)	MAS CYL PRS 2 (V)	PEDAL STROKE (V)	PEDAL STROKE 2 (V)
200 (20.4, 45)	0.9 – 1.2	0.9 – 1.2	1.7 – 2.1	2.9 – 3.3
500 (51, 112)	1.7 – 2.2	1.7 – 2.2	1.9 – 2.3	2.7 – 3.1

(7) Finish the brake control prohibition on the hand–held tester.

cardiagn.com

32157–01

COMPONENTS

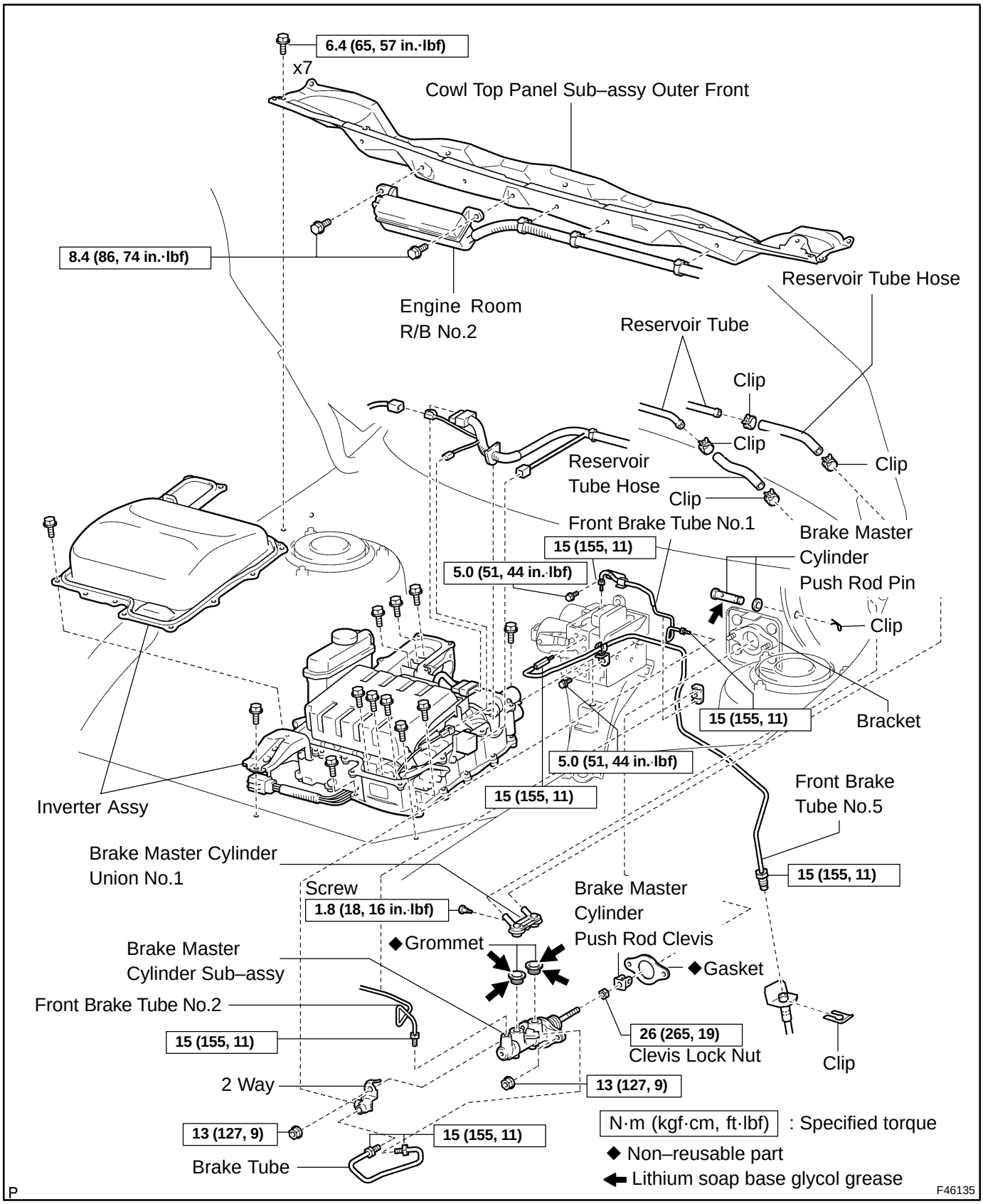

cardiagn.com

32158–01

REPLACEMENT

1. **REMOVE FR WIPER ARM LH (SEE PAGE 66–14)**
2. **REMOVE FR WIPER ARM RH (SEE PAGE 66–14)**
3. **REMOVE HOOD TO COWL TOP SEAL (SEE PAGE 66–14)**
4. **REMOVE COWL TOP VENTILATOR LOUVER LH (SEE PAGE 66–14)**
5. **REMOVE COWL TOP VENTILATOR LOUVER RH (SEE PAGE 66–14)**
6. **REMOVE WINDSHIELD WIPER MOTOR & LINK ASSY (SEE PAGE 66–14)**

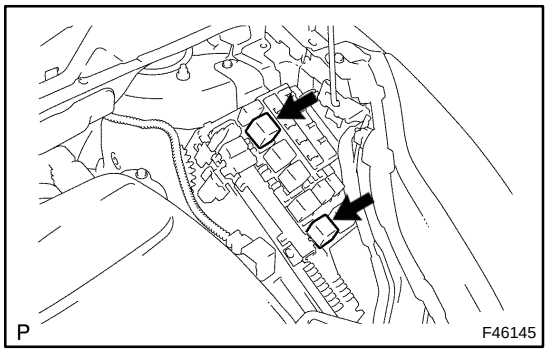

7. BRAKE CONTROL (ECB) OFF

NOTICE:

Prohibit the brake control (ECB) certainly before bleeding the brake fluid.

(a) With the power switch off to prohibit brake control, remove the motor relays No.1 and No.2.

NOTICE:

If the pump motor operates while there is air remaining inside the brake actuator hose, the air will enter the actuator, resulting in difficulty in air bleeding.

HINT:

Brake control (ECB) can be prohibited by selecting ”ECB INVALID” on the hand–held tester.

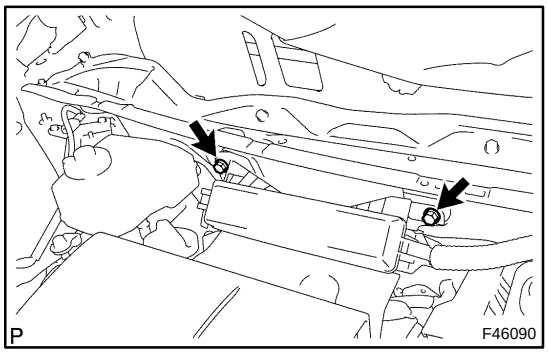

8. REMOVE COWL TOP PANEL SUB–ASSY OUTER FRONT

(a) Remove the 2 bolts and separate the engine room R/B No.2.

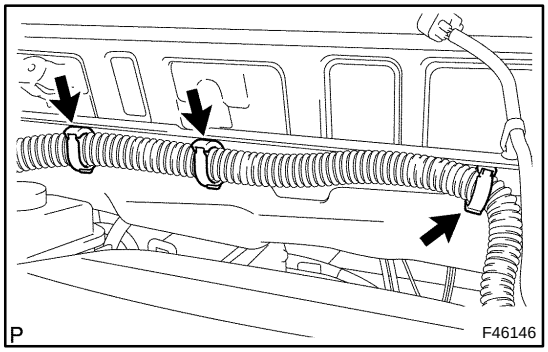

(b) Remove the 3 clamps from the cowl top panel sub–assy outer front.

cardiagn.com

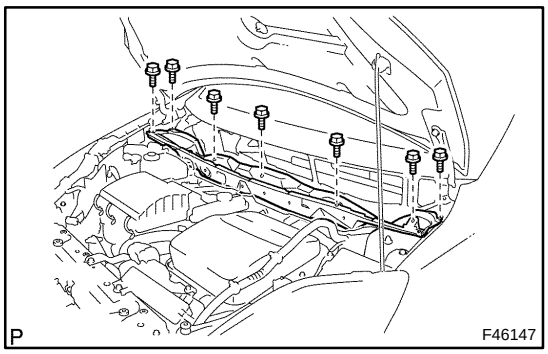

(c) Remove the 7 bolts and separate the cowl top panel sub–assy outer front.

9. REMOVE W/CONVERTER INVERTER ASSY (SEE PAGE 21–23)

HINT:

Refer to the procedures from the removal of the engine undercover LH up untill the removal of the inverter assy with converter.

10. DRAIN BRAKE FLUID

NOTICE:

Wash brake fluid off immediately if it adheres to any painted surface.

11. REMOVE INSTRUMENT PANEL REGISTER ASSY NO.1 (SEE PAGE 71–13)

12. REMOVE INSTRUMENT PANEL FINISH PANEL SUB–ASSY LOWER (SEE PAGE 71–13)

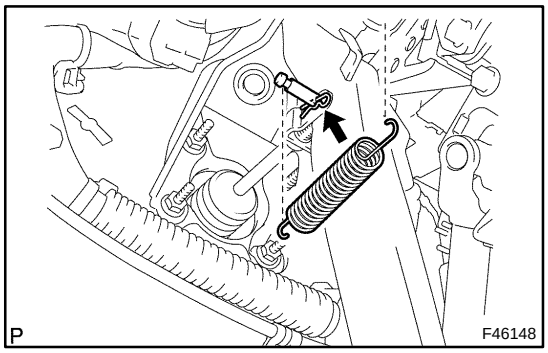

13. REMOVE BRAKE MASTER CYLINDER SUB–ASSY

(a) Remove the brake return spring.

(b) Remove the clip and brake master cylinder push rod pin, and separate the push rod clevis from the brake pedal.

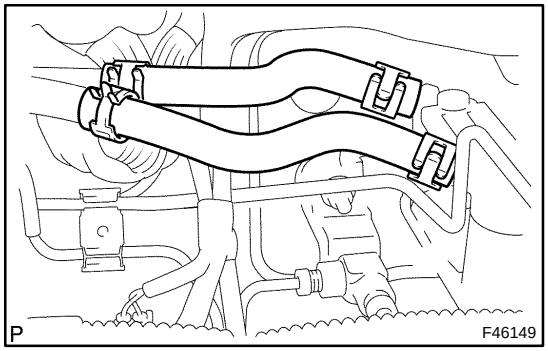

(c) Remove the 4 clips and 2 reservoir tube hoses.

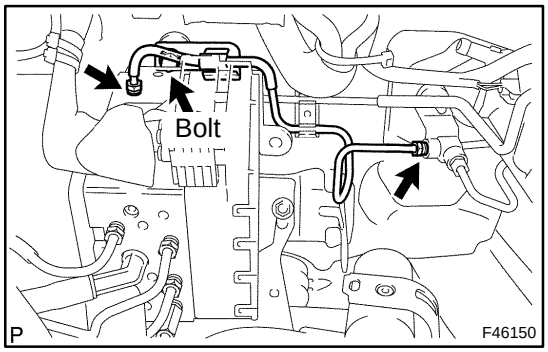

(d) Remove the bolt from the actuator bracket.

(e) Using SST, remove the front brake tube No.1.
SST 09023–00100

cardiagn.com

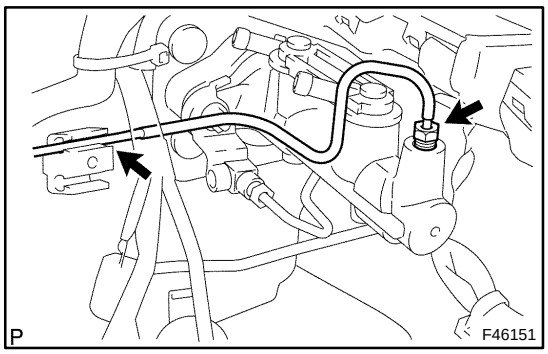

(f) Using SST, separate the front brake tube No.2 from the clamp and brake master cylinder sub–assy.
SST 09023–00100

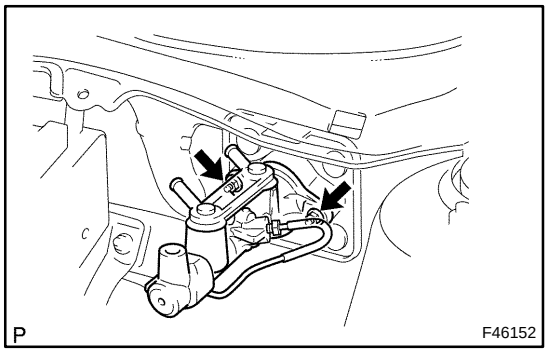

(g) Remove the 2 nuts, and remove the brake master cylinder gasket and brake master cylinder sub–assy from the bracket.

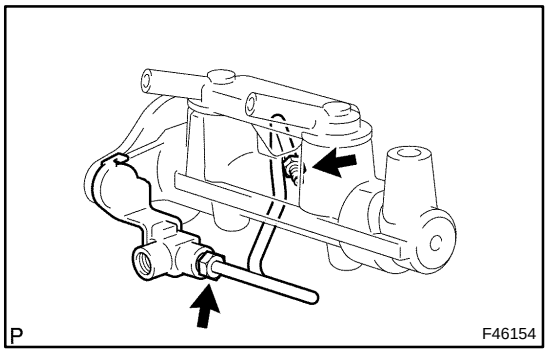

(h) Using SST, remove the brake tube and 2 way from the brake master cylinder sub–assy.
SST 09023–00100

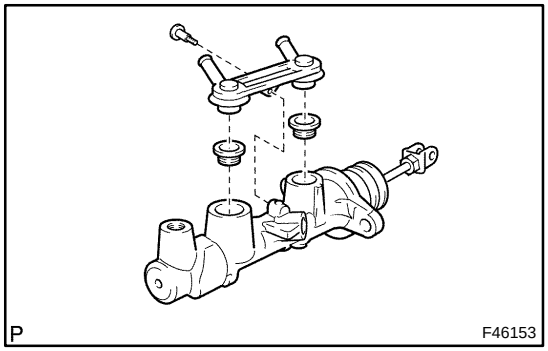

(i) Remove the screw, and remove the brake master cylinder union No.1 and 2 grommets from the brake master cylinder sub–assy.

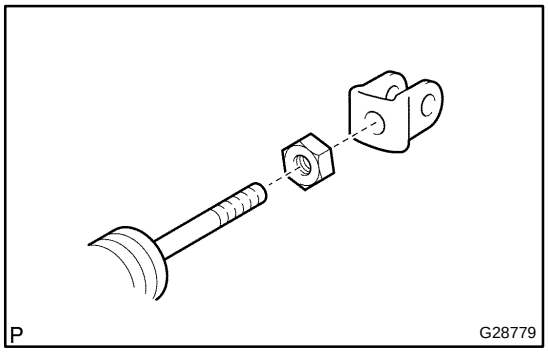

(j) Loosen the clevis lock nut and remove the brake master cylinder push rod clevis.

cardiagn.com

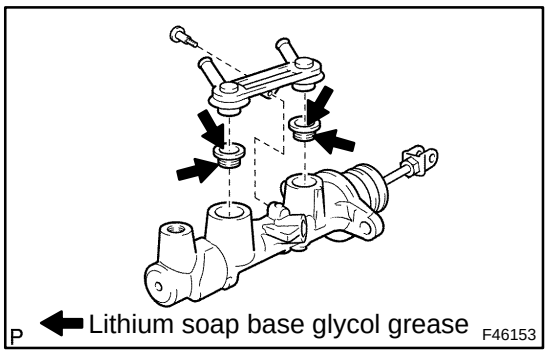

14. INSTALL BRAKE MASTER CYLINDER SUB–ASSY

(a) Install the brake master cylinder push rod clevis to the brake master cylinder sub–assy, and fix by the lock nut.

HINT:

After adjusting the brake pedal height, torque the lock nut.

(b) Apply lithium soap base glycol grease to the 2 new grommets.

(c) Install the brake master cylinder union No.1 and 2 grommets to the brake master cylinder sub–assy with a screw.
Torque: 1.8 N·m (18 kgf·cm, 16 in.·lbf)

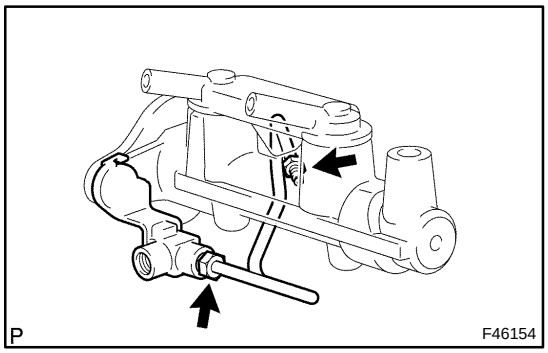

(d) Using SST, install the brake tube and 2 way to the brake master cylinder sub–assy.
SST 09023–00100
Torque: 15 N·m (155 kgf·cm, 11 ft·lbf)

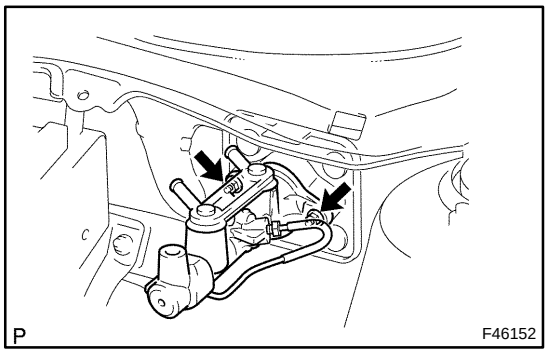

(e) Placing the gasket in between, install the brake master cylinder sub–assy to the bracket with 2 nuts.
Torque: 13 N·m (127 kgf·cm, 9 ft·lbf)

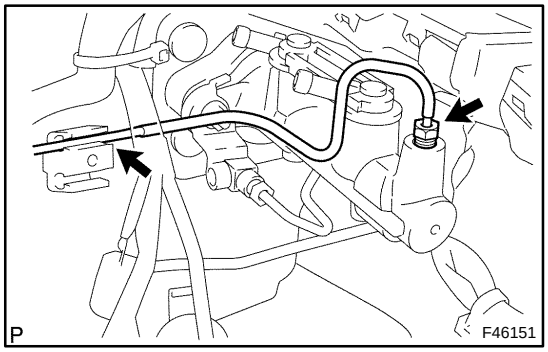

(f) Using SST, connect the front brake tube No.2 to the clamp and brake master cylinder sub–assy.
SST 09023–00100
Torque: 15 N·m (155 kgf·cm, 11 ft·lbf)

cardiagn.com

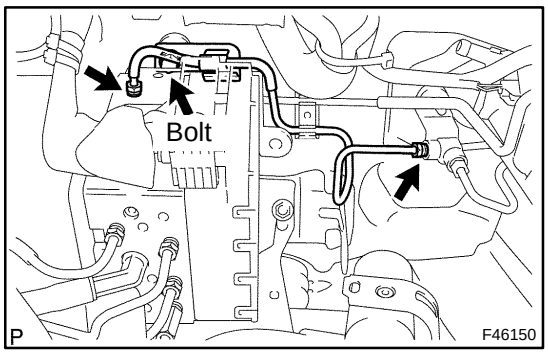

(g) Using SST, connect the front brake tube No.1.
SST 09023–00100
Torque: 15 N·m (155 kgf·cm, 11 ft·lbf)

(h) Install the bolt to the actuator bracket.
Torque: 5.0 N·m (51 kgf·cm, 44 in.·lbf)

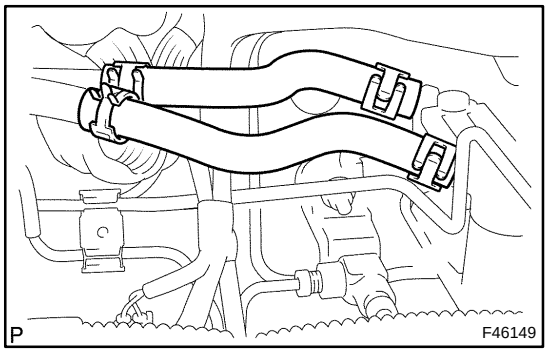

(i) Connect the 2 reservoir tube hoses and hold them there with clips.

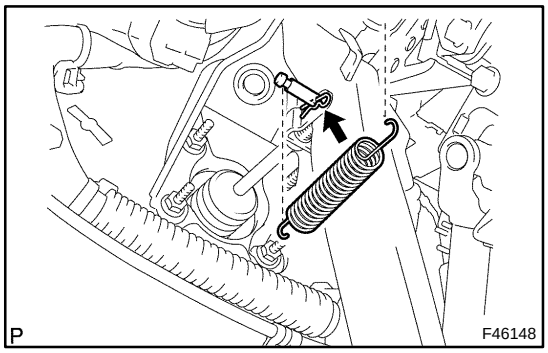

(j) Install the push rod clevis with the brake master cylinder push rod pin to the brake pedal.

(k) Install the clip and brake pedal return spring.

15. INSTALL W/CONVERTER INVERTER ASSY (SEE PAGE 21–23)

HINT:

Refer to the procedures from the installation of the inverter assy with converter up untill the installation of the engine under cover LH.

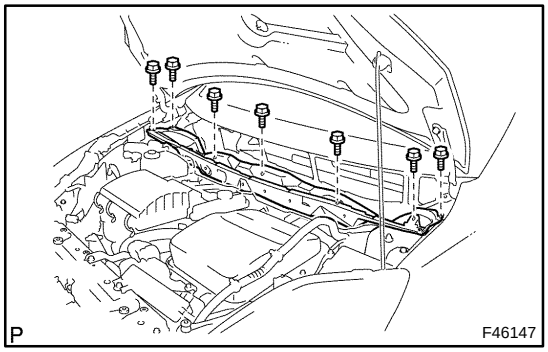

16. INSTALL COWL TOP PANEL SUB–ASSY OUTER FRONT

(a) Install the cowl top panel sub–assy outer front with the 7 bolts.
Torque: 6.4 N·m (65 kgf·cm, 57 in.·lbf)

cardiagn.com

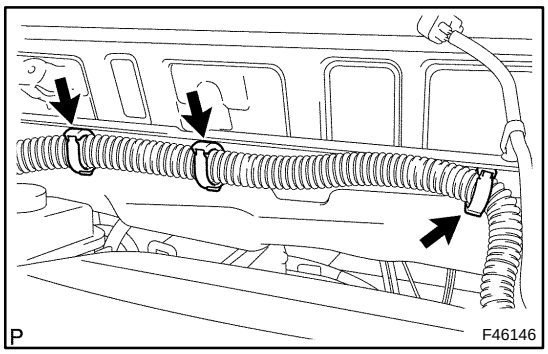

(b) Install the 3 clamps to the cowl top panel sub–assy outer front.

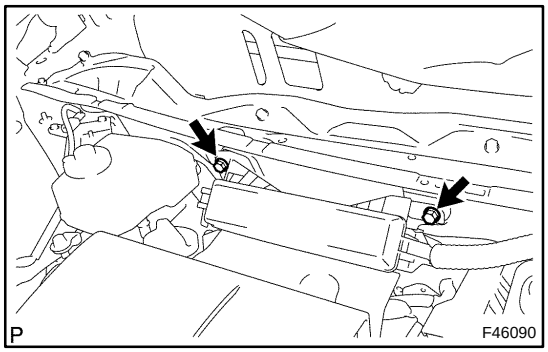

(c) Install the engine room R/B No.2 with the 2 bolts.
Torque: 8.4 N·m (86 kgf·cm, 74 in.·lbf)

17. INSTALL WINDSHIELD WIPER MOTOR & LINK ASSY (SEE PAGE 66–14)
18. INSTALL FR WIPER ARM LH (SEE PAGE 66–14)
19. INSTALL FR WIPER ARM RH (SEE PAGE 66–14)
20. FILL RESERVOIR WITH BRAKE FLUID (SEE PAGE 32–4)
21. BLEED MASTER CYLINDER (SEE PAGE 32–4)
SST 09023–00100
22. BLEED MASTER CYLINDER /STROKE SIMULATOR (SEE PAGE 32–4)
23. CHECK BRAKE FLUID LEAKAGE
24. CHECK FLUID LEVEL IN RESERVOIR
25. CHECK AND ADJUST BRAKE PEDAL HEIGHT (SEE PAGE 32–16)
26. CHECK PEDAL FREE PLAY (SEE PAGE 32–16)
27. CHECK PEDAL RESERVE DISTANCE (SEE PAGE 32–16)
28. INSTALL INSTRUMENT PANEL FINISH PANEL SUB–ASSY LOWER
29. INSTALL INSTRUMENT PANEL REGISTER ASSY NO.1
30. CHECK AND CLEAR DTC (SEE PAGE 05–975)

cardiagn.com

BRAKE STROKE SIMULATOR CYLINDER SUB–ASSY

32159–01

ON–VEHICLE INSPECTION

NOTICE:

The DTC may be stored after inspection. Be sure to clear the DTC and check that a normal system code is output after the inspection is finished.

1. INSPECT STROKE SIMULATOR

(a) Check battery voltage

Standard Value: 10 to 14 V (during engine stop)

(b) Connect hand–held tester and pedal effort gauge

(1) Connect the pedal effort gauge.

(2) Move the shift lever to the P position. Apply the parking brake and connect the hand–held tester to the DLC3.

(3) Turn the power switch on (IG).

(4) Clear the DTC (see page 05–975).

(c) Check operation w/o brake booster (see page 32–22).

(1) Check and adjust brake pedal height (see page 32–16).

(2) Check pedal free play (see page 32–16).

(3) Check pedal reserve distance (see page 32–16).

(4) Turn on the hand–held tester and select ”ECB INVALID” to prohibit the brake control (ECB).

(5) Monitor ”MAS CYL PRS 1”, ”MAS CYL PRS 2”, ”PEDAL STROKE” and ”PEDAL STROKE 2” using the hand–held tester.

(6) Check the value output from ”MAS CYL PRS 1”, ”MAS CYL PRS 2”, ”PEDAL STROKE” and ”PEDAL STROKE 2” by depressing the brake pedal.

Standard Value:

Pedal Effort N (kgf, lbf)	MAS CYL PRS 1 (V)	MAS CYL PRS 2 (V)	PEDAL STROKE (V)	PEDAL STROKE 2 (V)
200 (20.4, 45)	0.9 – 1.2	0.9 – 1.2	1.7 – 2.1	2.9 – 3.3
500 (51, 112)	1.7 – 2.2	1.7 – 2.2	1.9 – 2.3	2.7 – 3.1

(7) Finish the brake control prohibition on the hand–held tester.

(d) Check operation w/ brake booster

(1) Turn on the power switch.

(2) Turn on the hand–held tester and monitor the value of ”PEDAL STROKE” and ”PEDAL STROKE 2”.

(3) Depress the brake pedal 4 to 5 times.

(4) Check the value output from ”PEDAL STROKE” and ”PEDAL STROKE 2” by depressing the brake pedal.

Standard Value:

Pedal Effort N (kgf, lbf)	PEDAL STROKE (V)	PEDAL STROKE 2 (V)
50 (5.1, 11)	1.1 – 1.7	3.3 – 3.8
100 (10.2, 22)	1.3 – 1.8	3.2 – 3.7
150 (15.3, 34)	1.4 – 1.8	3.2 – 3.6
200 (20.4, 45)	1.4 – 1.8	3.2 – 3.6

cardiagn.com

3215A–01

COMPONENTS

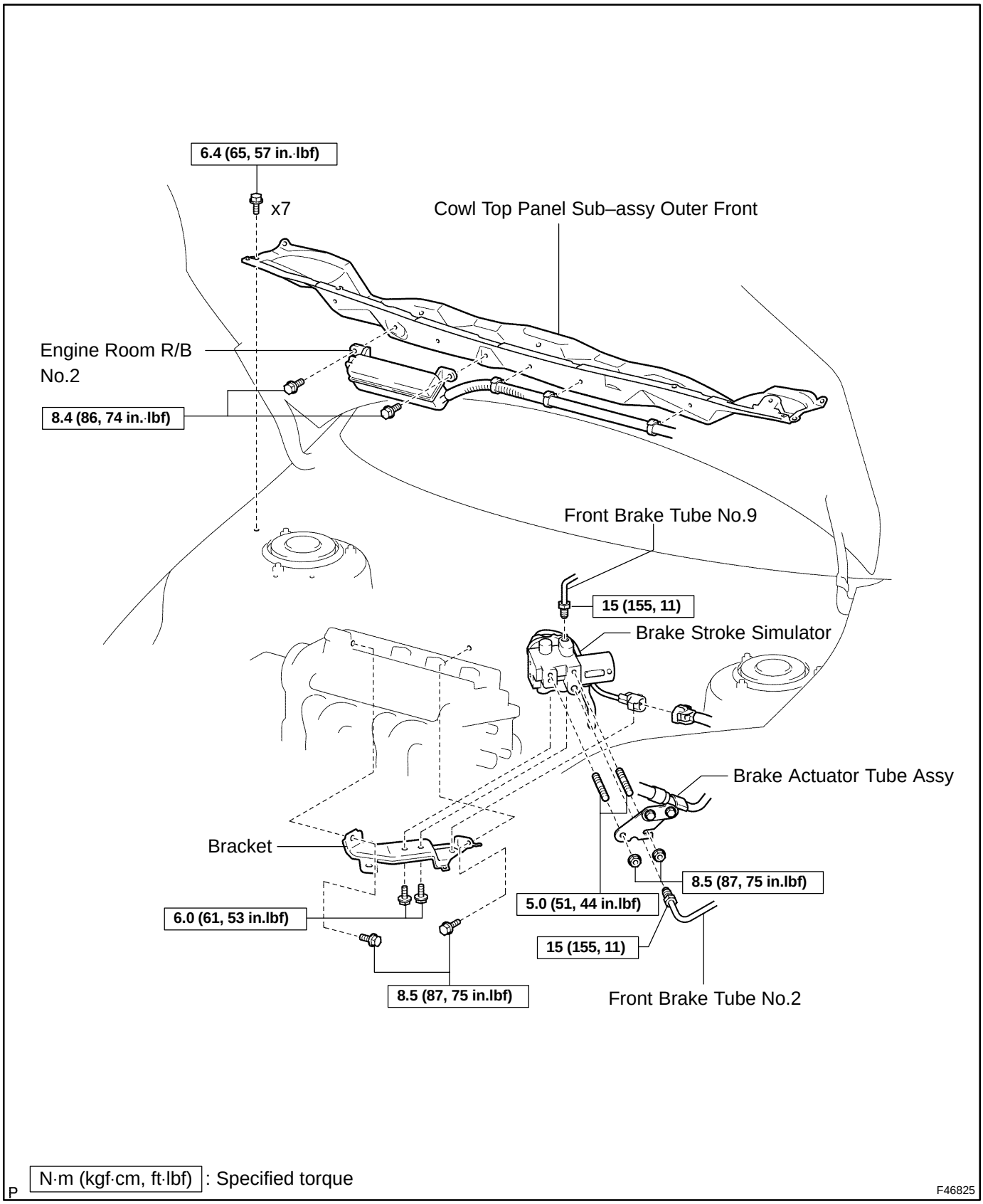

cardiagn.com

3215B–01

REPLACEMENT

1. REMOVE FR WIPER ARM LH (SEE PAGE 66–14)
2. REMOVE FR WIPER ARM RH (SEE PAGE 66–14)
3. REMOVE HOOD TO COWL TOP SEAL (SEE PAGE 66–14)
4. REMOVE COWL TOP VENTILATOR LOUVER LH (SEE PAGE 66–14)
5. REMOVE COWL TOP VENTILATOR LOUVER RH (SEE PAGE 66–14)
6. REMOVE WINDSHIELD WIPER MOTOR & LINK ASSY (SEE PAGE 66–14)
7. BRAKE CONTROL (ECB) OFF (SEE PAGE 32–24)

NOTICE:
Prohibit the brake control (ECB) certainly before bleeding the brake fluid.

8. REMOVE COWL TOP PANEL SUB–ASSY OUTER FRONT (SEE PAGE 32–24)
9. DRAIN BRAKE FLUID

NOTICE:
Wash brake fluid off immediately if it adheres to any painted surface.

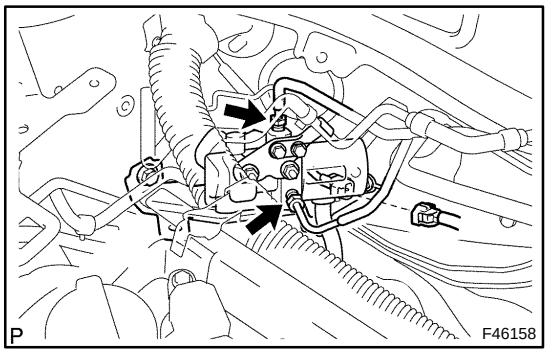

10. REMOVE BRAKE STROKE SIMULATOR CYLINDER SUB–ASSY

(a) Using SST, separate the 2 brake tubes from the brake simulator cylinder sub–assy.
SST 09023–00100

(b) Disconnect the connector.

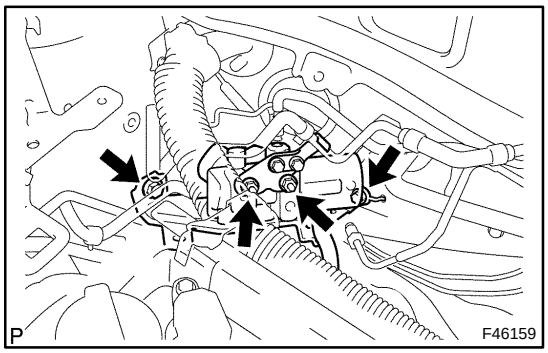

(c) Remove the 2 nuts and 2 bolts, and remove the brake stroke simulator with bracket.

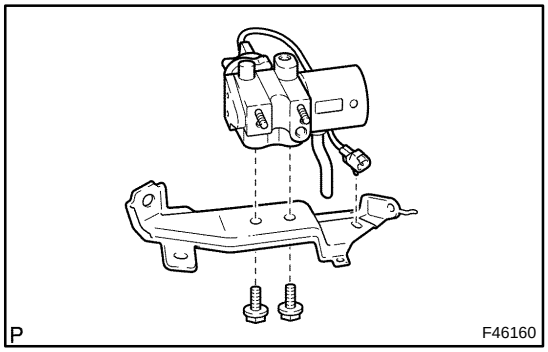

(d) Remove the 2 bolts and clamp of connector, and remove the bracket from the brake stroke simulator.

(e) Remove the 2 stud bolts from the brake stroke simulator.

cardiagn.com

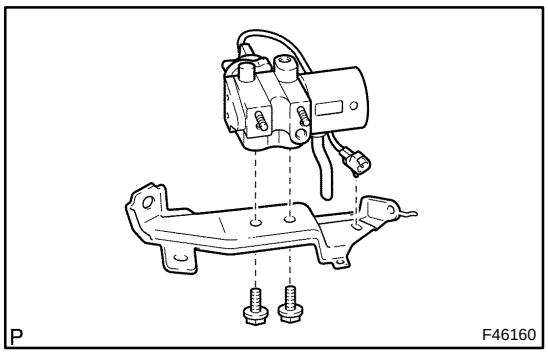

11. INSTALL BRAKE STROKE SIMULATOR CYLINDER SUB–ASSY

(a) Install the 2 stud bolts to the brake stroke simulator.
Torque: 5.0 N·m (51 kgf·cm, 44 in.·lbf)

(b) Install the brake stroke simulator to the bracket with the 2 bolts.
Torque: 6.0 N·m (61 kgf·cm, 53 in.·lbf)

(c) Install the connector clamp of brake stroke simulator to the bracket.

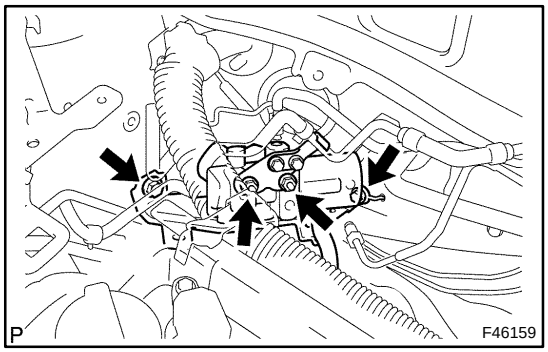

(d) Install the brake stroke simulator and bracket to the body with the 2 nuts and 2 bolts.
Torque: 8.5 N·m (87 kgf·cm, 75 in.·lbf)

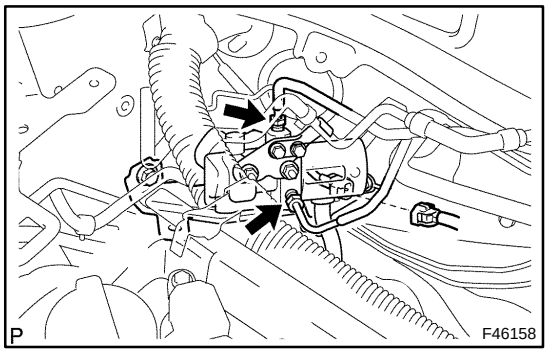

(e) Using SST, install the 2 brake tubes to the brake stroke simulator cylinder sub–assy.
SST 09023–00100
Torque: 15 N·m (155 kgf·cm, 11 ft·lbf)

(f) Connect the connector.

12. INSTALL COWL TOP PANEL SUB–ASSY OUTER FRONT (SEE PAGE 32–24)
13. INSTALL WINDSHIELD WIPER MOTOR & LINK ASSY (SEE PAGE 66–14)
14. INSTALL FR WIPER ARM LH (SEE PAGE 66–14)
15. INSTALL FR WIPER ARM RH (SEE PAGE 66–14)
16. FILL RESERVOIR WITH BRAKE FLUID (SEE PAGE 32–4)
17. BLEED MASTER CYLINDER /STROKE SIMULATOR (SEE PAGE 32–4)
18. CHECK BRAKE FLUID LEAKAGE
19. CHECK FLUID LEVEL IN RESERVOIR
20. CHECK AND CLEAR DTC (SEE PAGE 05–975)
21. SYSTEM INITIALIZATION (SEE PAGE 05–958)
22. CHECK OPERATION (SEE PAGE 32–30)

cardiagn.com

FRONT BRAKE

COMPONENTS

3215C–02

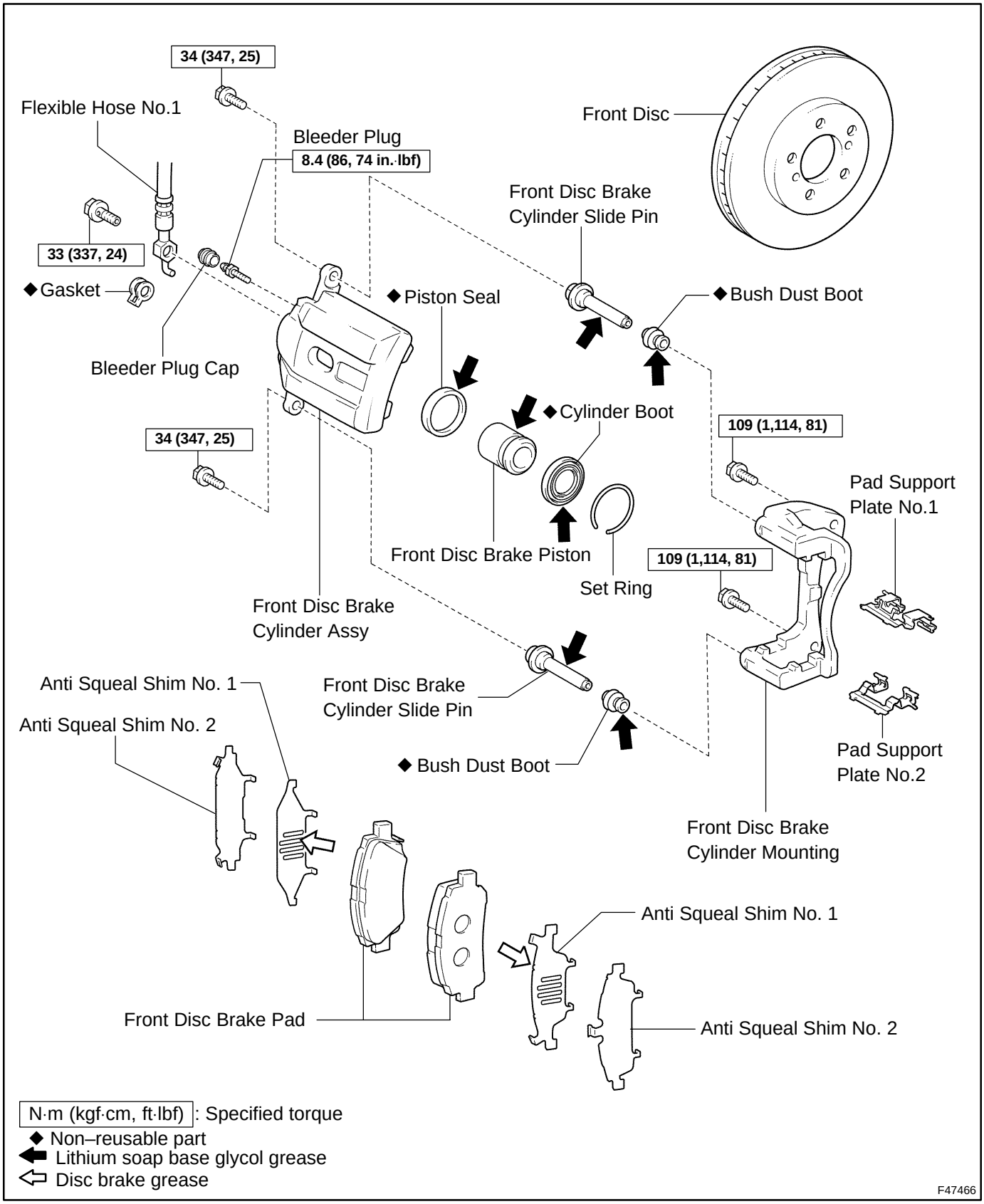

cardiagn.com

OVERHAUL

HINT:

If work that does not involve brake fluid bleeding, such as disc brake pad replacement, is started 2 minutes or more after the power switch is turned off, brake control (ECB) prohibition is not necessary.

1. REMOVE FRONT WHEEL

2. BRAKE CONTROL (ECB) OFF (SEE PAGE 32–24)

NOTICE:

Prohibit the brake control (ECB) certainly before bleeding the brake fluid.

3. DRAIN BRAKE FLUID

NOTICE:

Wash brake fluid off immediately if it adheres to any painted surface.

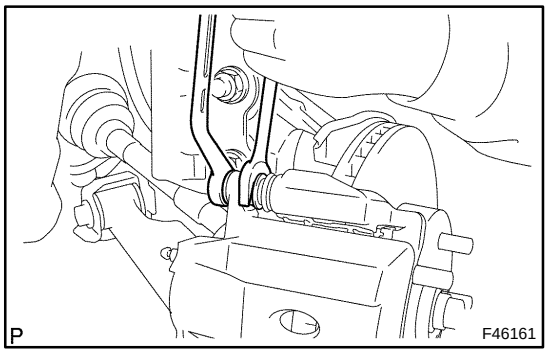

4. REMOVE FRONT DISC BRAKE CYLINDER SUB–ASSY

(a) Remove the union bolt and gasket, and separate the flexible hose No.1 from the front disc brake cylinder assy.

(b) Hold the front disc brake cylinder slide pin using a wrench. Remove the 2 bolts and separate the front disc brake cylinder.

5. REMOVE DISC BRAKE PAD KIT FRONT (PAD ONLY)

(a) Remove the 2 front disc brake pads from the front disc brake cylinder mounting.

6. REMOVE ANTI SQUEAL SHIM KIT FRONT

(a) Remove the 2 anti squeal shims No.1 and 2 anti squeal shims No.2 from the front disc brake pads.

7. REMOVE FRONT DISC BRAKE PAD SUPPORT PLATE NO.1

(a) Remove the pad support plate No.1 from the front disc brake cylinder mounting.

8. REMOVE FRONT DISC BRAKE PAD SUPPORT PLATE NO.2

(a) Remove the pad support plate No.2 from the front disc brake cylinder mounting.

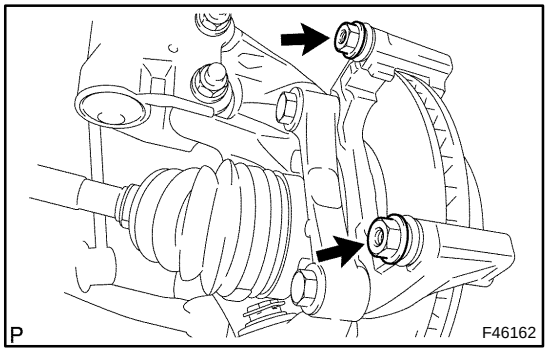

9. REMOVE FRONT DISC BRAKE CYLINDER SLIDE PIN

(a) Pull off the 2 front disc brake cylinder slide pins from the front disc brake cylinder mounting.

10. REMOVE FRONT DISC BRAKE BUSH DUST BOOT

(a) Remove the 2 bush dust boots from the front disc brake cylinder mounting.

cardiagn.com

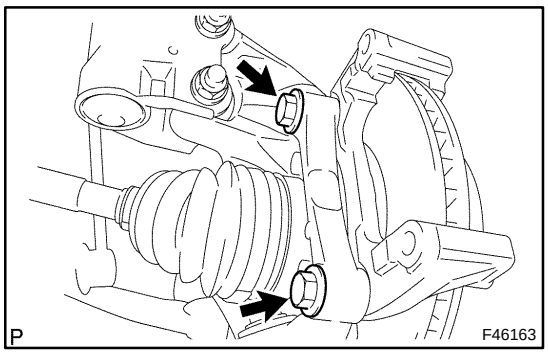

11. REMOVE FRONT DISC BRAKE CYLINDER MOUNTING LH

(a) Remove the 2 bolts and front disc brake cylinder mounting.

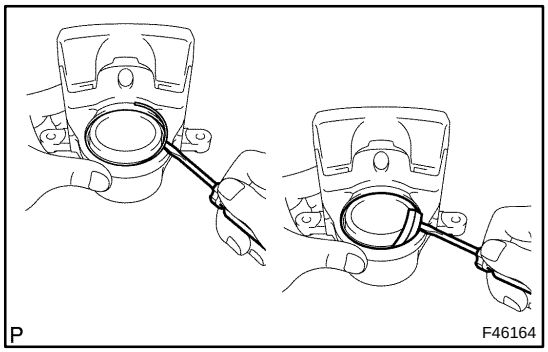

12. REMOVE CYLINDER BOOT

(a) Remove the set ring and cylinder boot from the front disc brake cylinder assy.

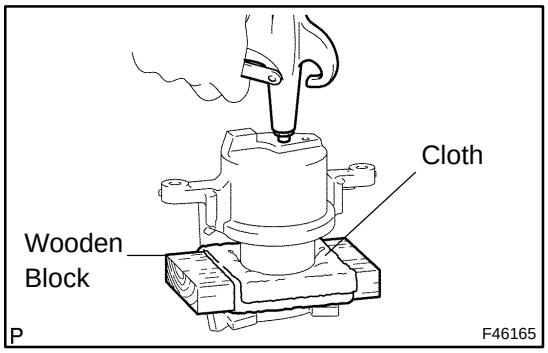

13. REMOVE FRONT DISC BRAKE PISTON

(a) Place a wooden block wrapped in a cloth between the front disc brake piston and front disc brake cylinder to prevent them from being damaged.

(b) Put air into the front disc brake cylinder gradually so that the piston does not protrude using compressed air. Separate the front disc brake piston from the front disc brake cylinder.

CAUTION:

Be careful not to pinch fingers.

NOTICE:

Do not spatter fluid.

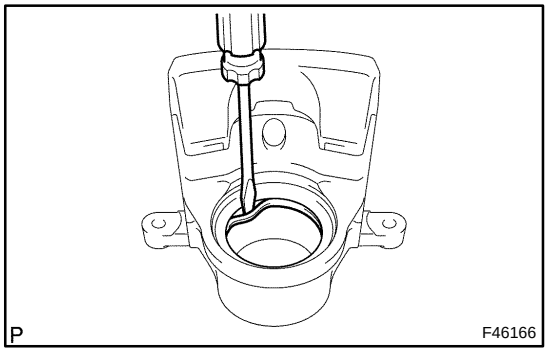

14. REMOVE PISTON SEAL

(a) Remove the piston seal from the front disc brake cylinder using a screwdriver.

NOTICE:

Do not damage the inside of the cylinder or the seal groove.

15. REMOVE FRONT DISC BRAKE BLEEDER PLUG CAP

16. REMOVE FRONT DISC BRAKE BLEEDER PLUG

17. INSPECT BRAKE CYLINDER AND PISTON

(a) Check that the side of the front disc brake piston and the inside of the cylinder are not damaged.

If necessary, replace the front disc brake cylinder sub–assy and front disc brake piston.

cardiagn.com

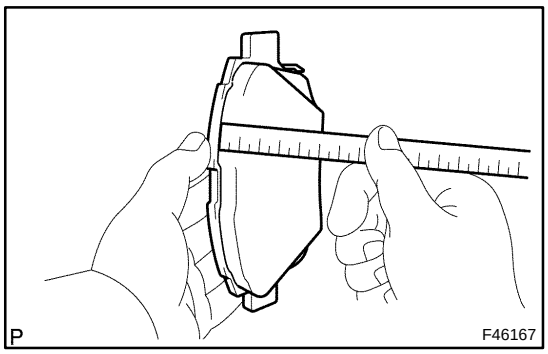

18. INSPECT PAD LINING THICKNESS

(a) Using a ruler, measure the pad lining thickness.
Standard thickness: 11.0 mm (0.433 in.)
Minimum thickness: 1.0 mm (0.039 in.)

HINT:
If the disc brake pad thickness is at the minimum or less, replace the disc brake pad.

19. INSPECT FRONT DISC BRAKE PAD SUPPORT PLATE NO.1

(a) Clean the area where the front disc brake support plate No.1 contacts the brake pad using brake cleaner. Check that there are no deformations, cracks or rust.
(b) Check that there is no looseness or deformation with the front disc brake cylinder mounting installed.
(c) Make sure that the support has sufficient rebound when installing the pad. Check that the pad does not easily drop after installation.

20. INSPECT FRONT DISC BRAKE PAD SUPPORT PLATE NO.2

HINT:
Check the pad support plate No.1 and No.2 using the same steps.

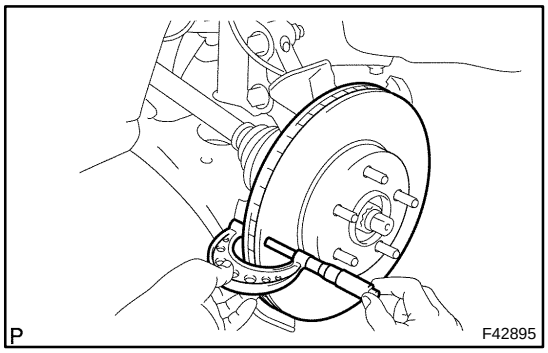

21. INSPECT DISC THICKNESS

(a) Using a micrometer, measure the disc thickness.
Standard thickness: 22.0 mm (0.866 in.)
Minimum thickness: 20.0 mm (0.787 in.)

HINT:
If the disc plate thickness is at the minimum or less, replace the disc plate.

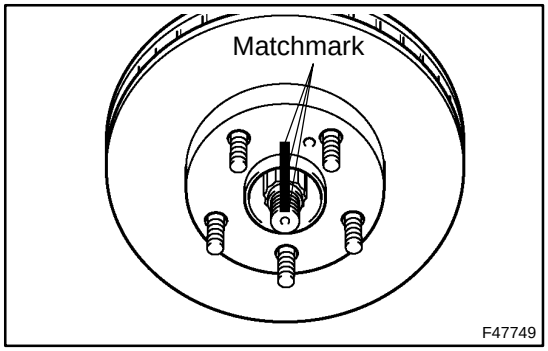

22. REMOVE FRONT DISC

HINT:
Put matchmarks on the disc and axle hub.

23. INSTALL FRONT DISC

(a) Align matchmarks on the disc and the axle hub. Install the front disc.

NOTICE:
When installing a new disc, select the position where the disc has the minimum runout.

cardiagn.com

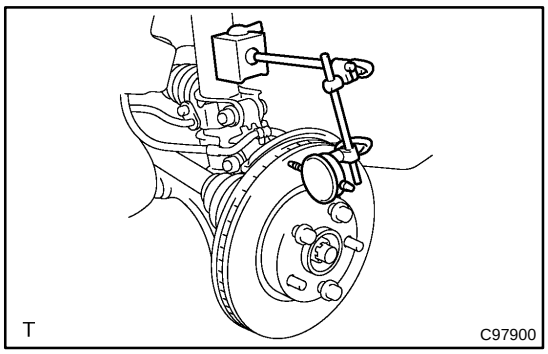

24. INSPECT DISC RUNOUT

(a) Check the looseness of the front wheel bearing and runout in the axle hub before inspecting the disc runout (see page 30–2).

(b) Hold the front disc with the hub nuts.
Torque: 103 N·m (1,050 kgf·cm, 76 ft·lbf)

(c) Holding a dial indicator 10 mm away from the outer edge of the front disc, measure the disc runout.
Maximum disc runout: 0.05 mm (0.0020 in.)

NOTICE:
If the runout exceeds the maximum value, change the installation positions of the disc and axle so that the runout will become minimal. If the runout exceeds even when the installation positions are changed or if disc thickness does not exceed the limit, shave the disc. If disc thickness exceeds the limit, replace the disc.

25. TEMPORARILY TIGHTEN FRONT DISC BRAKE BLEEDER PLUG

26. INSTALL FRONT DISC BRAKE BLEEDER PLUG CAP

27. INSTALL PISTON SEAL

(a) Apply lithium soap base glycol grease around the new piston seal and install it into the brake cylinder groove securely.

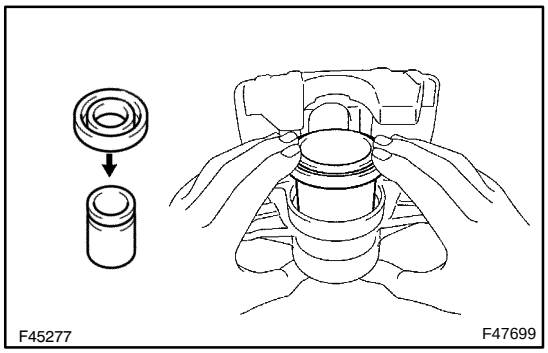

28. INSTALL FRONT DISC BRAKE PISTON

(a) Check the side of the front disc brake piston for any scratch.

NOTICE:
Replace the front disc brake piston with a new one if there is any scratch on it.

(b) Apply lithium soap base glycol grease to the inside of the new cylinder boot and install it to the front disc brake piston.

NOTICE:
Install the cylinder boot securely into the front disc brake piston groove.

(c) Apply lithium soap base glycol grease around the front disc brake piston and install it to the front disc brake cylinder.

NOTICE:
- **Do not install the piston forcibly into the front disc brake cylinder.**
- **Do not damage the piston tip during installation.**
- **Do not push the piston directly using hard or sharp tools.**

cardiagn.com

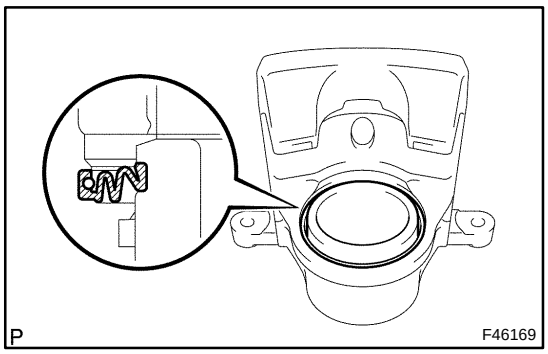

29. INSTALL CYLINDER BOOT

(a) Install the cylinder boot to the disc brake cylinder groove.

NOTICE:

Install the cylinder boot securely into the disc brake cylinder and piston groove.

(b) Install the new front disc brake piston set ring to the front disc brake cylinder using a screwdriver.

NOTICE:

Do not damage the cylinder boot.

30. INSTALL FRONT DISC BRAKE CYLINDER MOUNTING LH

(a) Install the front disc brake cylinder mounting with the 2 bolts.
Torque: 109 N·m (1,114 kgf·cm, 81 ft·lbf)

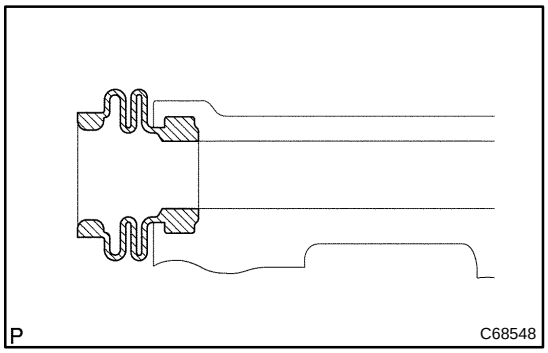

31. INSTALL FRONT DISC BRAKE BUSH DUST BOOT

(a) Apply lithium soap base glycol grease to seal surface of 2 new bush dust boots.

(b) Install the 2 bush dust boots to the front disc brake cylinder mounting.

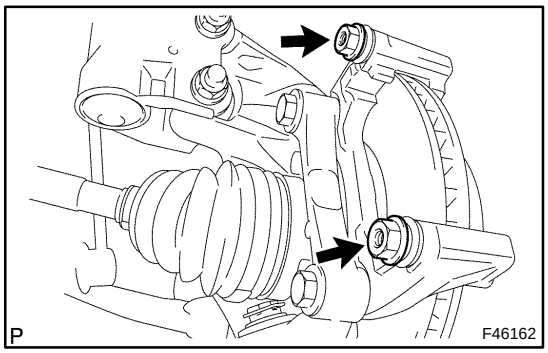

32. INSTALL FRONT DISC BRAKE CYLINDER SLIDE PIN

(a) Apply lithium soap base glycol grease to the sliding and fitting portion of the front disc brake cylinder slide pin.

(b) Push the front disc brake cylinder slide pin into the disc brake bush dust boot and install it.

33. INSTALL FRONT DISC BRAKE PAD SUPPORT PLATE NO.1

(a) Install the pad support plate No.1 to the front disc brake cylinder mounting.

34. INSTALL FRONT DISC BRAKE PAD SUPPORT PLATE NO.2

(a) Install the pad support plate No.2 to the front disc brake cylinder mounting.

35. INSTALL ANTI SQUEAL SHIM KIT FRONT

(a) Apply disc brake grease to the area where the anti squeal shim No.1 makes contact.

(b) Install the 2 anti squeal shims No.1 and 2 anti squeal shims No.2 to the front disc brake pads.

36. INSTALL DISC BRAKE PAD KIT FRONT (PAD ONLY)

(a) Install the 2 front disc brake pads to the front disc brake cylinder mounting.

cardiagn.com

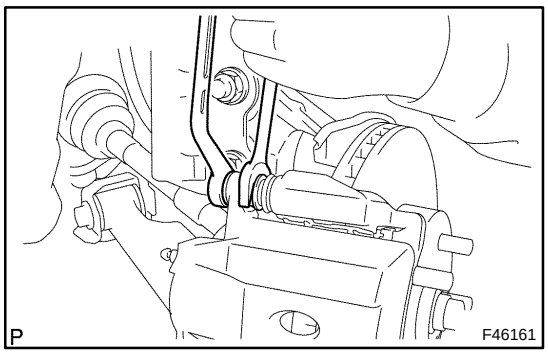

37. INSTALL FRONT DISC BRAKE CYLINDER SUB–ASSY

(a) Install the front disc brake cylinder assy with the 2 bolts.
Torque: 34 N·m (347 kgf·cm, 25 ft·lbf)

(b) Placing the new gasket in between, connect the flexible hose No.1 to the front disc brake cylinder assy with the union bolt.
Torque: 33 N·m (337 kgf·cm, 24 ft·lbf)

38. FILL RESERVOIR WITH BRAKE FLUID (SEE PAGE 32–4)
39. BLEED FRONT AND REAR BRAKE SYSTEMS (SEE PAGE 32–4)
40. CHECK BRAKE FLUID LEAKAGE
41. CHECK FLUID LEVEL IN RESERVOIR
42. INSTALL FRONT WHEEL
Torque: 103 N·m (1,050 kgf·cm, 76 ft·lbf)
43. CHECK AND CLEAR DTC (SEE PAGE 05–975)

cardiagn.com

REAR DRUM BRAKE

COMPONENTS

3215E–01

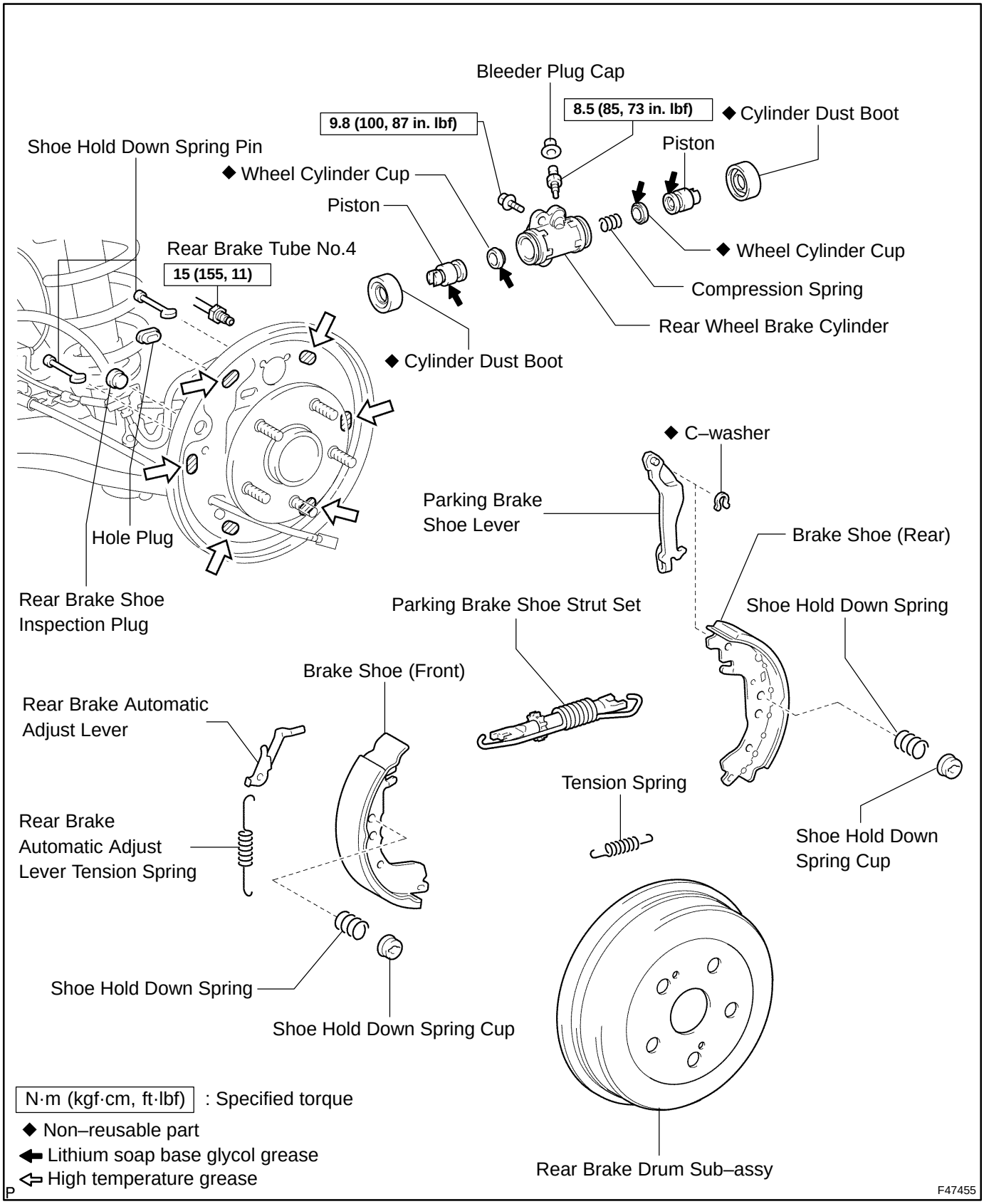

cardiagn.com

3215F–01

OVERHAUL

HINT:

- Overhaul the RH side using the same procedures as those for the LH side.
- If work that does not involve brake fluid bleeding, such as drum brake shoe replacement, is started 2 minutes or more after the power switch is turned off, brake control (ECB) prohibition is not necessary.

1. REMOVE REAR WHEEL

2. BRAKE CONTROL (ECB) OFF (SEE PAGE 32–24)

NOTICE:

Prohibit the brake control (ECB) certainly before bleeding the brake fluid.

3. DRAIN BRAKE FLUID

NOTICE:

Wash brake fluid off immediately if it adheres to any painted surfaces.

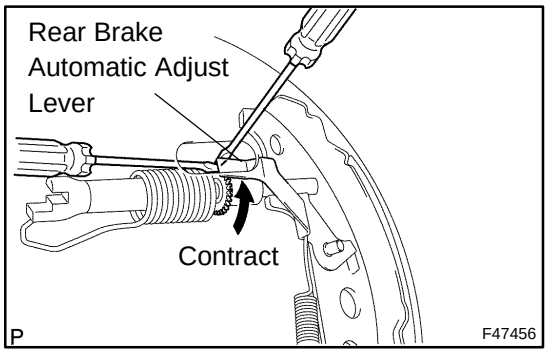

4. REMOVE REAR BRAKE DRUM SUB–ASSY

(a) Put matchmarks on the rear brake drum and the axle hub.

(b) Release the parking brake and remove the rear brake drum sub–assy.

HINT:

If the rear brake drum sub–assy cannnot be removed, push the rear brake automatic adjust lever through the backing plate service hole using a screwdriver. Turn and contract the adjuster using another screwdriver.

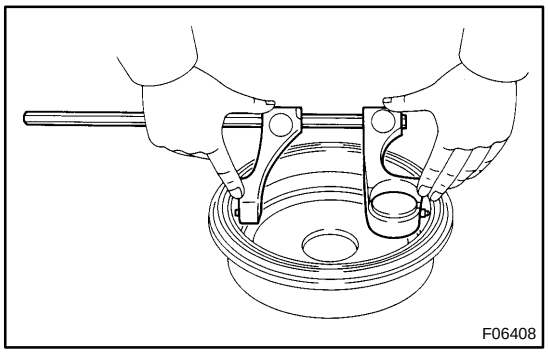

5. INSPECT BRAKE DRUM INSIDE DIAMETER

(a) Using a brake drum gauge or equivalent, measure the inside diameter of the drum.

Standard inside diameter: 200.0 mm (7.874 in.)

Maximum inside diameter: 201.0 mm (7.913 in.)

HINT:

If the inside diameter of the brake drum is at the maximum or more, replace the brake drum sub–assy.

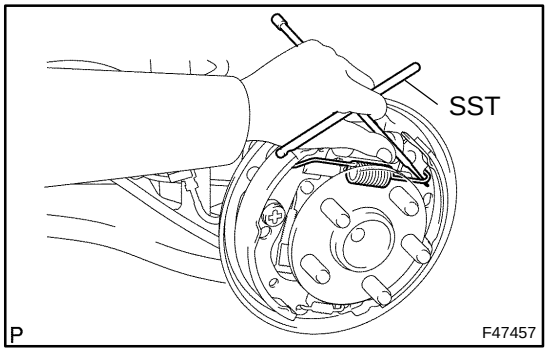

6. SEPARATE PARKING BRAKE SHOE STRUT SET LH

(a) Using SST, disconnect the spring and parking brake shoe strut set from the brake shoes.

SST 09703–30011

NOTICE:

Be careful not to damage the cylinder dust boot.

cardiagn.com

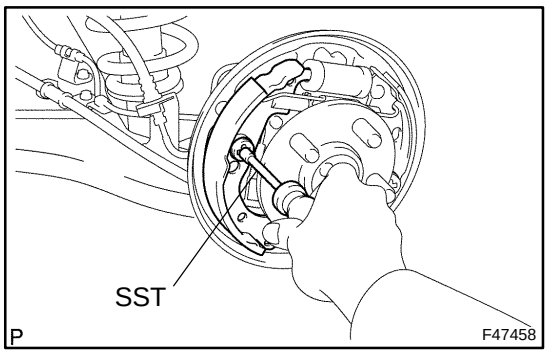

7. REMOVE FRONT BRAKE SHOE

(a) Using SST, remove the shoe hold down spring cup, the shoe hold down spring and shoe hold down spring pin.
SST 09718–00010

(b) Remove the brake shoe (front) and tension spring.

8. REMOVE PARKING BRAKE SHOE STRUT SET LH

(a) Remove the parking brake shoe strut set from the brake shoe (rear).

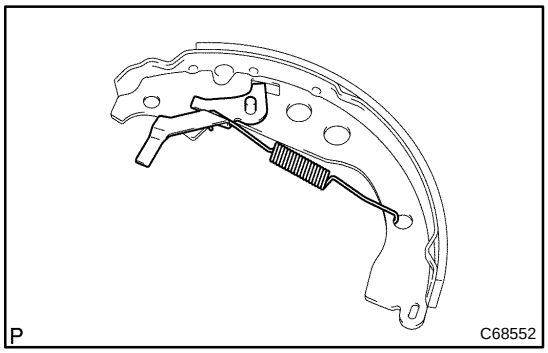

9. REMOVE REAR BRAKE AUTOMATIC ADJUST LEVER LH

(a) Remove the rear brake automatic adjust lever tension spring and the rear brake automatic adjust lever.

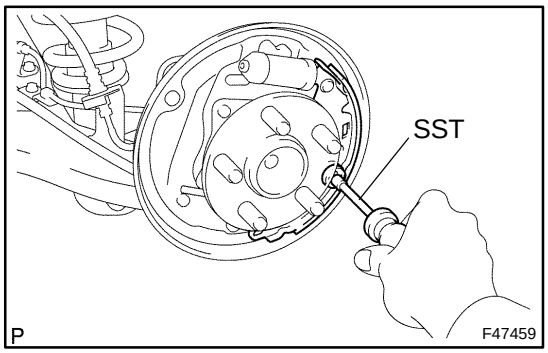

10. REMOVE REAR BRAKE SHOE

(a) Remove the tension spring from the brake shoe (rear).

(b) Using SST, remove the shoe hold down spring cup, the shoe hold down spring and shoe hold down spring pin.
SST 09718–00010

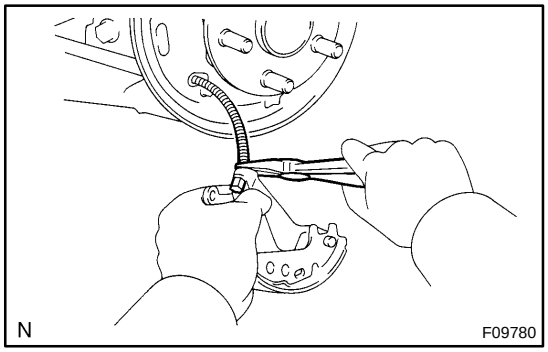

(c) Using needle–nose pliers, disconnect the parking brake cable, and remove the brake shoe (rear).

cardiagn.com

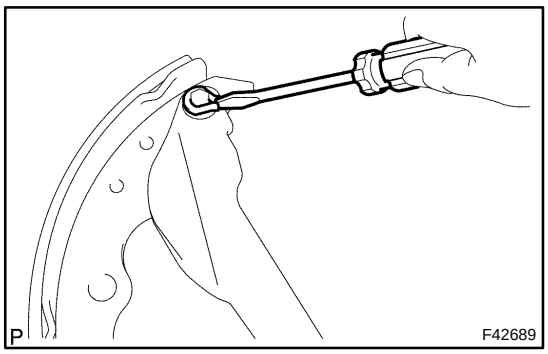

11. REMOVE REAR BRAKE PARKING BRAKE SHOE LEVER SUB–ASSY

(a) Using a screwdriver, remove the C–washer and the parking brake shoe lever.

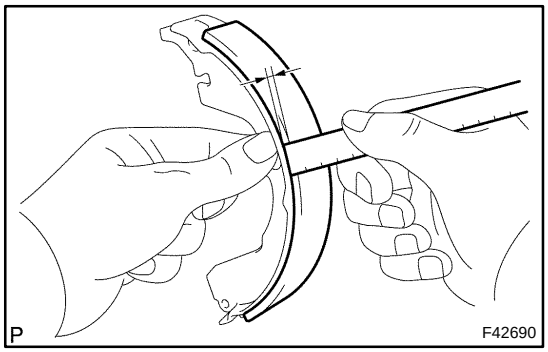

12. INSPECT REAR DRUM BRAKE SHOE LINING THICKNESS

(a) Using a ruler, measure the thickness of the shoe lining.
Standard thickness: 4.0 mm (0.157 in.)
Minimum thickness: 1.0 mm (0.039in.)

If the lining thickness is at the minimum thickness or less, or if there is severe or uneven wear, replace the brake shoe.

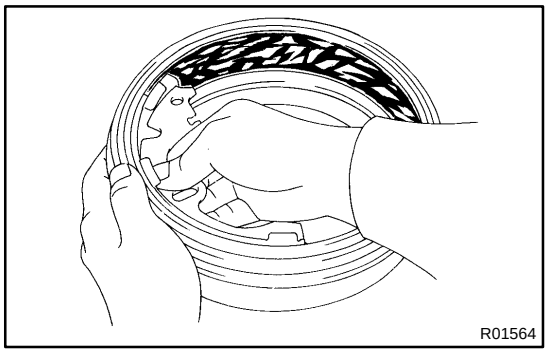

13. INSPECT BRAKE DRUM AND REAR DRUM BRAKE SHOE LINING FOR PROPER CONTACT

(a) Apply chalk to the inside surface of the drum, then grind the drum on the brake shoe lining to fit.

If the contact between the drum and the shoe lining is improper, repair it using a brake shoe grinder or replace the brake shoe assembly.

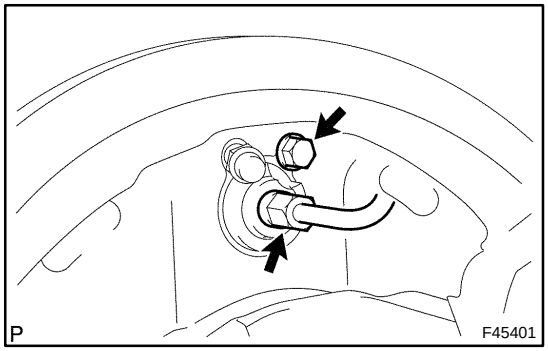

14. REMOVE LH, FRONT OR UPPER REAR WHEEL BRAKE CYLINDER ASSY

(a) Using SST, disconnect the brake line.
SST 09023–00100

HINT:
Use a container to catch the brake fluid.

(b) Remove the bolt and the rear wheel brake cylinder assy.

15. REMOVE REAR WHEEL CYLINDER CUP KIT

(a) Remove the 2 cylinder dust boots from the rear wheel brake cylinder.
(b) Remove the 2 pistons and the compression spring.
(c) Remove the 2 wheel cylinder cups from each piston.

16. INSPECT BRAKE WHEEL CYLINDER

(a) Check the cylinder bore and the piston for rust or scoring.

If necessary, replace the brake wheel cylinder sub–assy.

17. REMOVE DRUM BRAKE, REAR BLEEDER PLUG

(a) Remove the rear drum bleeder plug from the rear wheel cylinder assy.

cardiagn.com

18. TEMPORARILY TIGHTEN DRUM BRAKE, REAR BLEEDER PLUG

(a) Install the rear drum brake bleeder plug to the rear wheel cylinder assy.

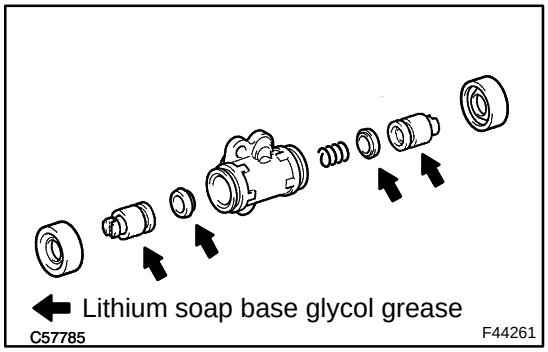

19. INSTALL REAR WHEEL CYLINDER CUP KIT

(a) Apply lithium soap base glycol grease to 2 new wheel cylinder cups and 2 pistons.

(b) Install the 2 wheel cylinder cups on each piston.

(c) Install the compression spring and the 2 pistons to the rear wheel brake cylinder.

(d) Install the 2 new cylinder dust boots to the rear wheel brake cylinder.

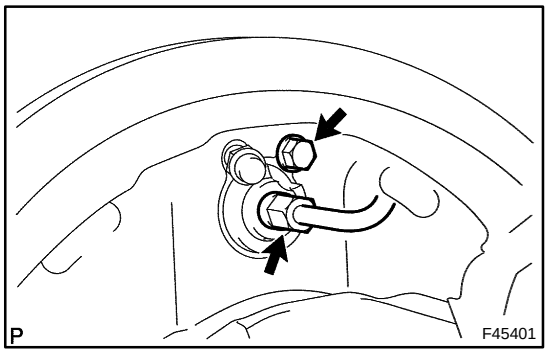

20. INSTALL LH, FRONT OR UPPER REAR WHEEL BRAKE CYLINDER ASSY

(a) Install the rear wheel brake cylinder assy with the bolt.
Torque: 9.8 N·m (100 kgf·cm, 87 in·lbf)

(b) Using SST, connect the brake line.
SST 09023–00100
Torque: 15 N·m (155 kgf·cm, 11 ft·lbf)

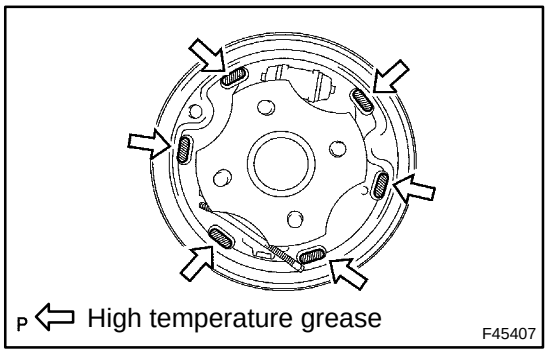

21. APPLICATION HIGH TEMPERATURE GREASE

(a) Apply high temperature grease to the shoe attached surface of the backing plate.

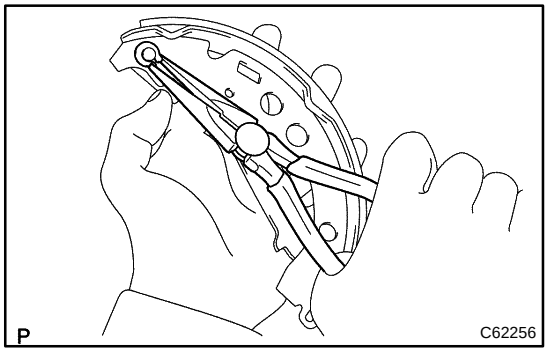

22. INSTALL REAR BRAKE PARKING BRAKE SHOE LEVER SUB–ASSY

(a) Using needle–nose pliers, install the parking brake lever with a new C–washer.

cardiagn.com

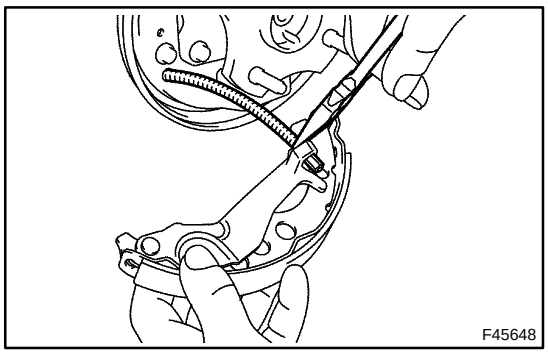

23. INSTALL REAR BRAKE SHOE

(a) Using needle–nose pliers, connect the parking brake cable No.3 to the parking brake shoe lever.

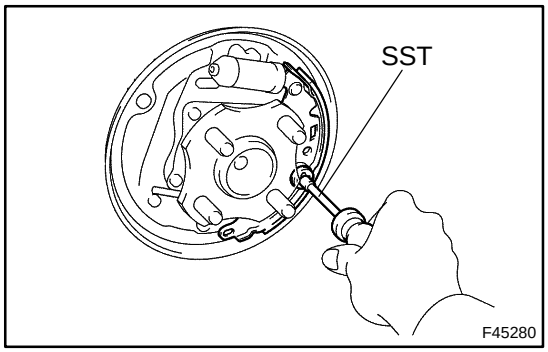

(b) Using SST, install the rear brake shoe, the pin, the shoe hold down spring and the shoe hold down cup.
SST 09718–00010

24. INSTALL REAR BRAKE SHOE RETURN SPRING

(a) Install the rear brake shoe retern spring to the brake shoe (rear).

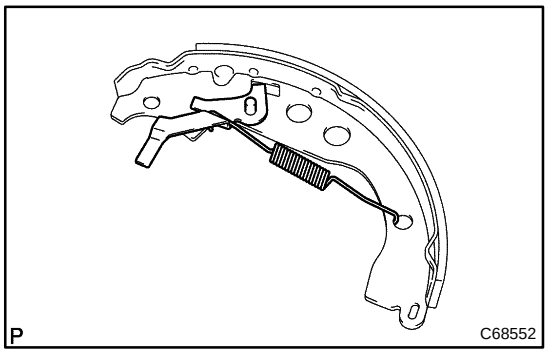

25. INSTALL REAR BRAKE AUTOMATIC ADJUST LEVER LH

(a) Install the rear brake automatic adjust lever and the rear brake automatic adjust lever tension spring to the front brake shoe.

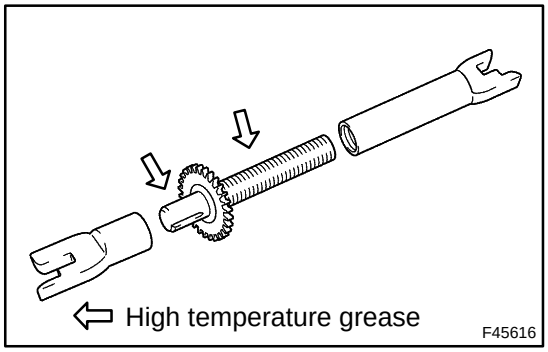

26. INSTALL PARKING BRAKE SHOE STRUT SET LH

(a) Apply high temperature grease to the adjusting bolt and assemble.

(b) Install the shoe return spring to the strut set.

cardiagn.com

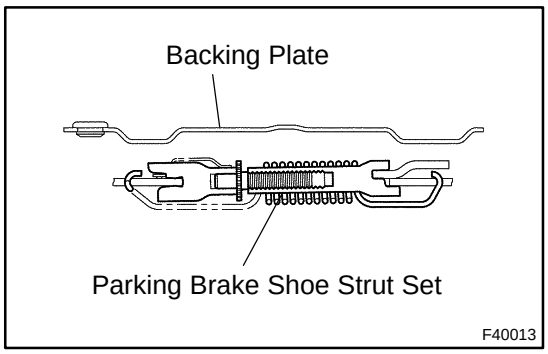

(c) Install the parking brake shoe strut set as shown in the illustration.

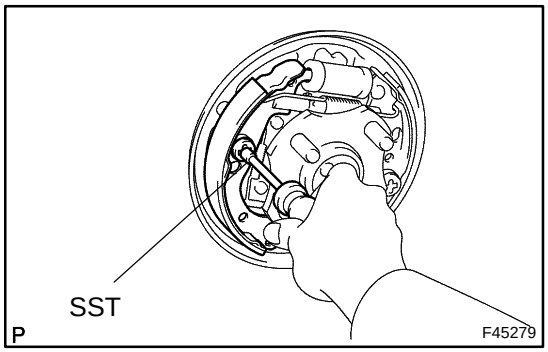

27. INSTALL FRONT BRAKE SHOE

(a) Connect the tension spring to the brake shoe (front) and rear brake shoe.

(b) Using SST, install the brake shoe (front), the pin, the shoe hold down spring and the cup.
SST 09718–00010

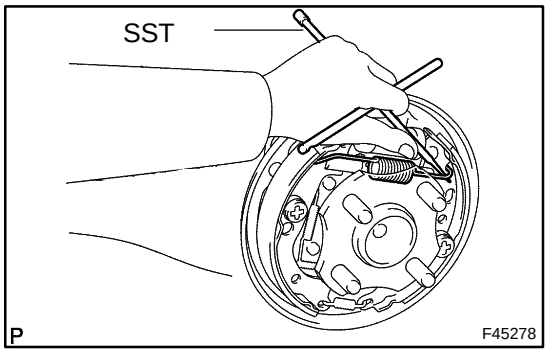

28. CONNECT PARKING BRAKE SHOE STRUT SET LH

(a) Using SST, connect the shoe return spring to the front brake shoe and rear brake shoe.
SST 09703–30011

NOTICE:
Be careful not to damage the wheel cylinder boot.

cardiagn.com

29. CHECK REAR DRUM BRAKE INSTALLATION

(a) Check that each part is installed properly.

NOTICE:

There should be no oil or grease adhering to the friction surfaces of the shoe lining and drum.

If they are not installed correctly as shown in the illustration, re-install them.

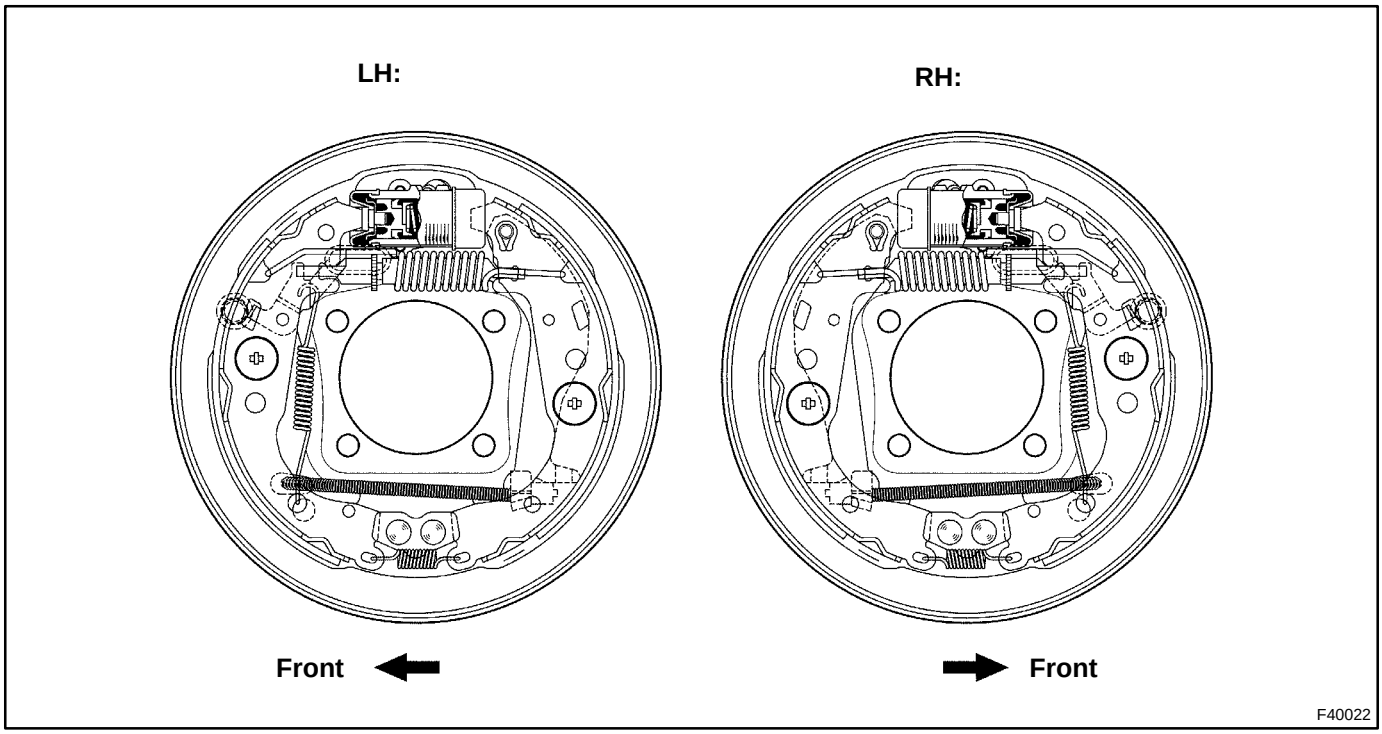

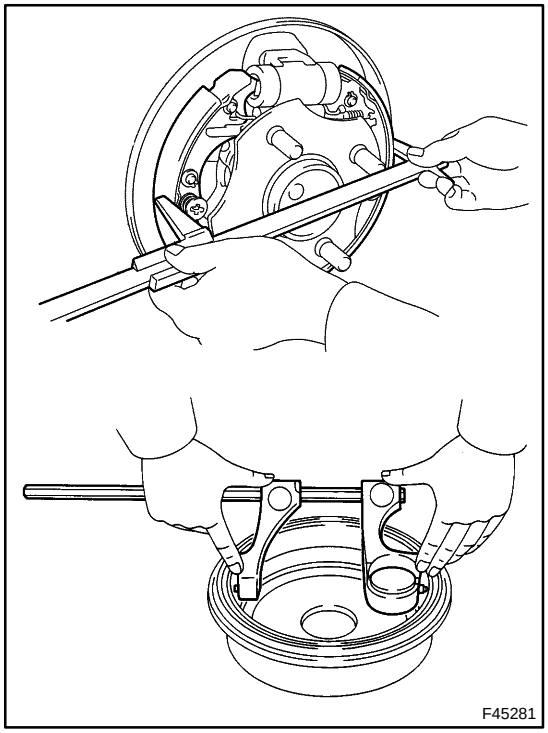

(b) Measure the brake drum inside diameter and the diameter of the brake shoes. Check the difference between the diameters the correct shoe clearance.

Shoe clearance: 0.6 mm (0.024 in.)

NOTICE:

There should be no oil or grease adhering to the friction surfaces of the shoe lining and the drum.

cardiagn.com

30. INSTALL REAR BRAKE DRUM SUB–ASSY

(a) Aligning the matchmarks, install the rear brake drum sub–assy.

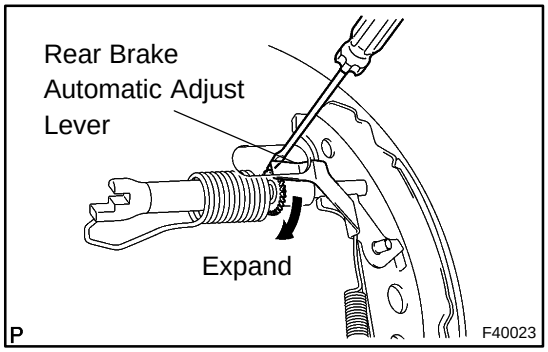

31. ADJUST REAR DRUM BRAKE SHOE CLEARANCE

(a) Temporarily install the 2 hub nuts.

(b) Remove the hole plug, and turn the adjuster to expand the shoe until the drum locks.

(c) Rotate the adjuster by 8 notches.

(d) Install the hole plug.

32. FILL RESERVOIR WITH BRAKE FLUID (SEE PAGE 32–4)

33. BLEED FRONT AND REAR BRAKE SYSTEMS (SEE PAGE 32–4)

34. CHECK BRAKE FLUID LEAKAGE

35. CHECK FLUID LEVEL IN RESERVOIR

36. INSTALL REAR WHEEL

Torque: 103 N·m (1,050 kgf·cm, 76 ft·lbf)

37. CHECK PARKING BRAKE PEDAL TRAVEL (SEE PAGE 33–2)

38. ADJUST PARKING BRAKE PEDAL TRAVEL (SEE PAGE 33–2)

39. CHECK AND CLEAR DTC (SEE PAGE 05–975)

cardiagn.com

BRAKE ACTUATOR ASSY

3215G–02

ON–VEHICLE INSPECTION

1. INSPECT BRAKE ACTUATOR OPERATION

(a) Pre–check preparation

(1) Move the shift lever to the P position. Apply the parking brake and connect the hand–held tester to the DLC3.

(2) Turn the power switch on (IG).

(3) Turn on the hand–held tester. Select ”MAS CYL PRS 1”, ”MAS CYL PRS2”, ”FR PRESS SENS”, ”FL PRESS SENS”, ”RR PRESS SENS” and ”RL PRESS SENS”.

(b) Check FR system solenoid (SLA**, SLR**, SMC1, SMC2)

(1) Select ”SLAFR CUR”. → Set the current to 1.2 A → Enter and check the output voltage.

NOTICE:

Do not depress the brake pedal.

HINT:

- It takes approximately 35 seconds to complete the check.
- If incorrect, troubleshoot the brake system (see page 05–966).

Standard value:

Sensor	10 to 20 sec. after check start (V)	35 sec. or more after check start (V)
MAS CYL PRS 1	0.3 – 0.7	0.3 – 0.7
MAS CYL PRS 2	0.3 – 0.7	0.3 – 0.7
FR PRESS SENS	2.5 – 4.5	0.3 – 0.7
FL PRESS SENS	0.3 – 0.7	0.3 – 0.7
RR PRESS SENS	0.3 – 0.7	0.3 – 0.7
RL PRESS SENS	0.3 – 0.7	0.3 – 0.7

(c) Check FL system solenoid (SLA**, SLR**, SMC1, SMC2)

(1) Select ”SLAFL CUR”. → Set the current to 1.2 A. → Enter and check the output voltage.

NOTICE:

Do not depress the brake pedal.

HINT:

- It takes approximately 35 seconds to complete the check.
- If incorrect, troubleshoot the brake system (see page 05–966).

Standard value:

Sensor	10 to 20 sec. after check start (V)	35 sec. or more after check start (V)
MAS CYL PRS 1	0.3 – 0.7	0.3 – 0.7
MAS CYL PRS 2	0.3 – 0.7	0.3 – 0.7
FR PRESS SENS	0.3 – 0.7	0.3 – 0.7
FL PRESS SENS	2.5 – 4.5	0.3 – 0.7
RR PRESS SENS	0.3 – 0.7	0.3 – 0.7
RL PRESS SENS	0.3 – 0.7	0.3 – 0.7

cardiagn.com

(d) Check RR system solenoid (SLA**, SLR**, SMC1, SMC2)

(1) Select ”SLARR CUR”. → Set the current to 1.2 A. → Enter and check the output voltage.

NOTICE:

Do not depress the brake pedal.

HINT:

- It takes approximately 35 seconds to complete the check.
- If incorrect, troubleshoot the brake system (see page 05–966).

Standard value:

Sensor	10 to 20 sec. after check start (V)	35 sec. or more after check start (V)
MAS CYL PRS 1	0.3 – 0.7	0.3 – 0.7
MAS CYL PRS 2	0.3 – 0.7	0.3 – 0.7
FR PRESS SENS	0.3 – 0.7	0.3 – 0.7
FL PRESS SENS	0.3 – 0.7	0.3 – 0.7
RR PRESS SENS	2.5 – 4.5	0.3 – 0.7
RL PRESS SENS	0.3 – 0.7	0.3 – 0.7

(e) Check RL system solenoid (SLA**, SLR**, SMC1, SMC2)

(1) Select ”SLARL CUR”. → Set the current to 1.2 A. → Enter and check the output voltage.

NOTICE:

Do not depress the brake pedal.

HINT:

- It takes approximately 35 seconds to complete the check.
- If incorrect, troubleshoot the brake system (see page 05–966).

Standard value:

Sensor	10 to 20 sec. after check start (V)	35 sec. or more after check start (V)
MAS CYL PRS 1	0.3 – 0.7	0.3 – 0.7
MAS CYL PRS 2	0.3 – 0.7	0.3 – 0.7
FR PRESS SENS	0.3 – 0.7	0.3 – 0.7
FL PRESS SENS	0.3 – 0.7	0.3 – 0.7
RR PRESS SENS	0.3 – 0.7	0.3 – 0.7
RL PRESS SENS	2.5 – 4.5	0.3 – 0.7

(f) Check SMC1, SMC2

(1) Select and enter ”ECB INVALID” to prohibit the brake control (ECB) on the hand–held tester menu screen.

(2) Check that the ECB warning light comes on.

(3) Check the output voltage by depressing the pedal.

Standard:

Difference in output voltage between ”MAS CYL PRS 1” and ”FR PRESS SENS” is less than 0.4 V.

Difference in the output voltage between ”MAS CYL PRS 2” and ”FL PRESS SENS” is less than 0.4 V.

(4) Enter the return key on the hand–held tester and cancel brake control prohibition (ECB INVALID).

2. INSPECT PRESSURE SENSOR OPERATION

(a) Check battery voltage

Standard Value: 10 to 14 V (during engine stop)

(b) Connect the hydro booster pressure gauge and pedal effort gauge.

cardiagn.com

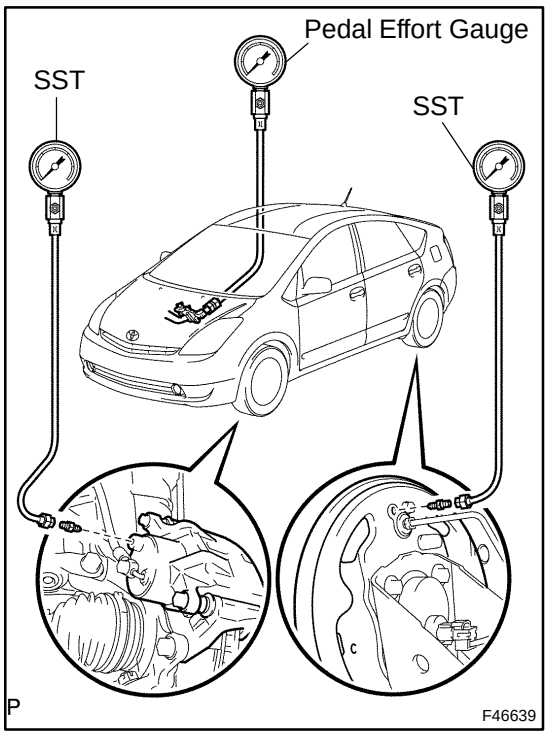

(1) Install LSPV gauge (SST) and brake pedal effort gauge.

SST 09709–29018

(2) Bleed the air out of the hydro booster pressure gauge.

(3) Move the shift lever to the P position. Connect the hand–held tester to the DLC3 with the parking brake applied.

(4) Turn the power switch on (IG).

(5) Clear the DTC (see page 05–975).

(c) Check wheel cylinder pressure sensor and master pressure sensor.

(1) Turn on the hand–held tester. Select and enter ”MAS CYL PRS 1”, ”MAS CYL PRS 2”, ”FR PRESS SENS”, ”FL PRESS SENS”, ”RR PRESS SENS” and ”RL PRESS SENS” into the data monitor.

(2) Check the brake effort, pressure gauge reading, and output pressure voltage.

If incorrect, troubleshoot the brake system (see page 05–966).

Standard value:

Brake effort N (kgf, lbf)	MAS CYL PRS 1 (V)	MAS CYL PRS 2 (V)
200 (20.4, 45)	0.9 – 1.2	0.9 – 1.2
500 (51, 112)	1.7 – 2.2	1.7 – 2.2

Brake effort N (kgf, lbf)	Front right wheel hydraulic pressure MPa (kgf/cm^2, psi)	FR PRESS SENS (V)
50 (5.1, 11)	3.6 (36.4, 518)	1.15 – 1.35
100 (10.2, 22)	6.9 (70.0, 996)	1.8 – 2.0
150 (15.3, 34)	9.1 (93.3, 1327)	2.25 – 2.45
200 (20.4, 45)	11.4 (115.9, 1648)	2.65 – 2.95

Brake effort N (kgf, lbf)	Front left wheel hydraulic pressure MPa (kgf/cm^2, psi)	FL PRESS SENS (V)
50 (5.1, 11)	3.6 (36.4, 518)	1.15 – 1.35
100 (10.2, 22)	6.9 (70.0, 996)	1.8 – 2.0
150 (15.3, 34)	9.1 (93.3, 1327)	2.25 – 2.45
200 (20.4, 45)	11.4 (115.9, 1648)	2.65 – 2.95

Brake effort N (kgf, lbf)	Rear right wheel hydraulic pressure MPa(kgf/cm^2, psi)	RR PRESS SENS (V)
50 (5.1, 11)	3.9 (39.4, 560)	1.2 – 1.4
100 (10.2, 22)	4 (40.8, 580)	1.25 – 1.5
150 (15.3, 34)	4 (40.8, 580)	1.25 – 1.5
200 (20.4, 45)	4 (40.8, 580)	1.25 – 1.5

Brake effort N (kgf, lbf)	Rear left wheel hydraulic pressure MPa (kgf/cm^2, psi)	RL PRESS SENS (V)
50 (5.1, 11)	3.9 (39.4, 560)	1.2 – 1.4
100 (10.2, 22)	4 (40.8, 580)	1.25 – 1.5
150 (15.3, 34)	4 (40.8, 580)	1.25 – 1.5
200 (20.4, 45)	4 (40.8, 580)	1.25 – 1.5

cardiagn.com

(d) Check accumulator (ACC) pressure sensor

(1) Move the shift lever to the P position. Apply the parking brake and connect the hand–held tester.

(2) Turn the power switch on (IG).

(3) Turn on the hand–held tester. Select and enter the accumulator (ACC) pressure sensor 1 (”ACC PRESS SENS”) into the data monitor.

(4) Temporarily operate the pump motor by depressing the brake pedal 4 to 5 times.

(5) After confirming that the pump motor stops, check the pressure output voltage.

If incorrect, troubleshoot the brake system (see page 05–966).

Standard Value: 2.6 to 3.8 V

cardiagn.com

3215H–01

REPLACEMENT

1. REMOVE FR WIPER ARM LH (SEE PAGE 66–14)
2. REMOVE FR WIPER ARM RH (SEE PAGE 66–14)
3. REMOVE HOOD TO COWL TOP SEAL (SEE PAGE 66–14)
4. REMOVE COWL TOP VENTILATOR LOUVER LH (SEE PAGE 66–14)
5. REMOVE COWL TOP VENTILATOR LOUVER RH (SEE PAGE 66–14)
6. REMOVE WINDSHIELD WIPER MOTOR & LINK ASSY (SEE PAGE 66–14)
7. PERFORM ACCUMULATOR PRESSURE DOWN

NOTICE:

Carry out accumulator zero down and lower the internal pressure before removing the brake actuator.

(a) Move the shift lever to the P position. Apply the parking brake and connect the hand–held tester to the DLC3.
(b) Turn the power switch on (IG).
(c) Turn on the hand–held tester. Select ”ZERO DOWN”.

NOTICE:

Keep the fluid inside the reservoir above the ”LOW” level by replenishing.

HINT:

- Accumulator pressure is released and accumlated repeatedly, which circulates the fluid inside the accumulator when performing this procedure.
- The pump motor rotates and the accumulator is pressurized every time turning the power switch from off to on (IG).

(d) Turn the power switch off.

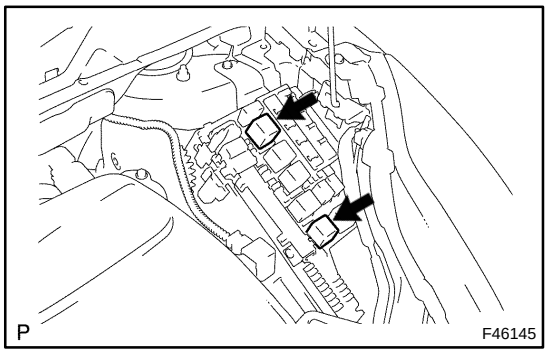

8. BRAKE CONTROL (ECB) OFF

NOTICE:

- **Prohibit the brake control (ECB) certainly before air bleeding.**
- **Be sure to remove the motor relays No.1 and No.2 first, then the brake actuator.**

(a) With the power switch off to prohibit brake control, remove the motor relays No.1 and No.2.

NOTICE:

If the pump motor operates while there is air remaining inside the brake actuator hose, the air will enter the actuator, resulting in difficulty in air bleeding.

9. REMOVE COWL TOP PANEL SUB–ASSY OUTER FRONT (SEE PAGE 32–24)
10. REMOVE W/CONVERTER INVERTER ASSY (SEE PAGE 21–23)

HINT:

Refer to the procedures from the removal of the engine under cover LH up untill the removal of the inverter assy with converter.

11. DRAIN BRAKE FLUID

NOTICE:

Wash brake fluid off immediately if it adheres to any painted surface.

cardiagn.com

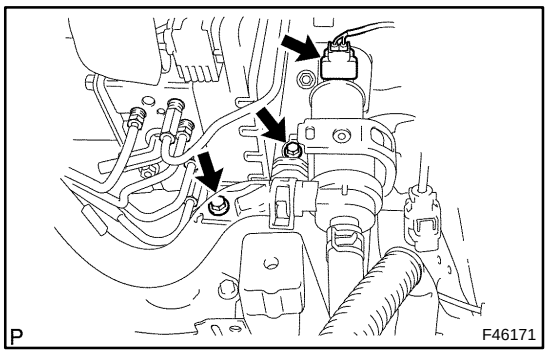

12. SEPARATE WATER W/MOTOR & BRACKET PUMP ASSY

(a) Remove the 2 bolts and connector, separate the heater water pump assy from the gusset assy.

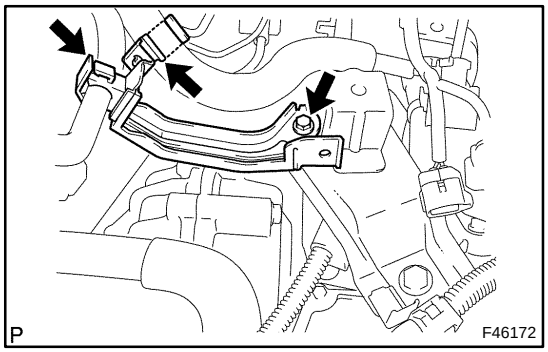

(b) Remove the 2 clamps and bolt, and remove the heater hose bracket from the gusset assy.

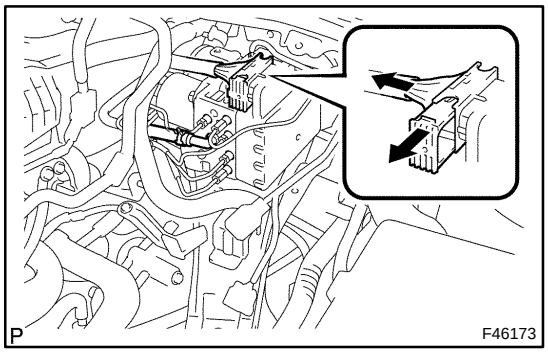

13. REMOVE BRAKE ACTUATOR WITH BRACKET

(a) Release the lock and separate the connector from the brake actuator assy.

(b) Remove the clip and separate the brake actuator hose No.2 from the brake actuator assy.

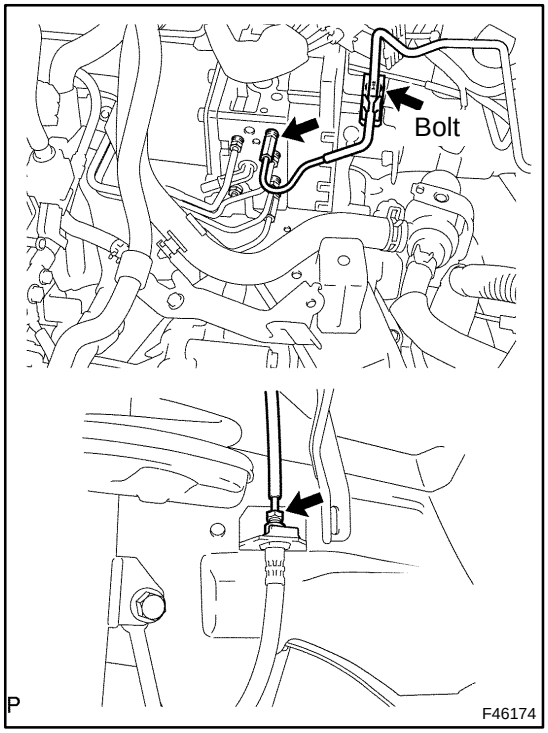

(c) Using SST, separate the front brake tube No.5 from the brake actuator assy and front brake flexible hose.
SST 09023–00100

(d) Remove the bolt and front brake tube No.5 from the bracket of the brake actuator assy.

cardiagn.com

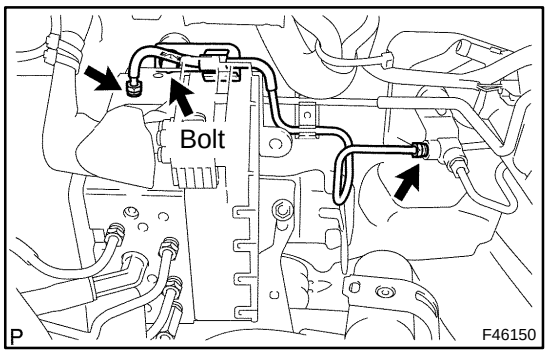

(e) Using SST, separate the front brake tube No.1.
SST 09023–00100

(f) Remove the bolt and the front brake tube No.1 from the bracket of the brake actuator assy.

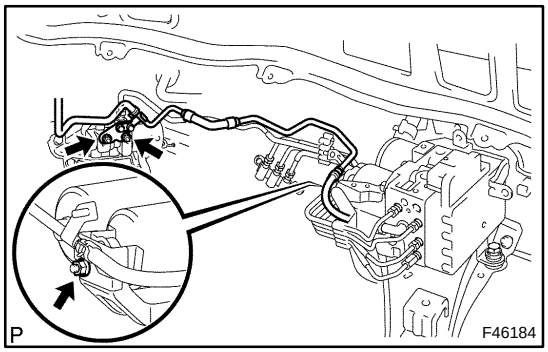

(g) Remove the 3 nuts and the brake actuator tubes assy from the brake stroke simulator and brake actuator assy.

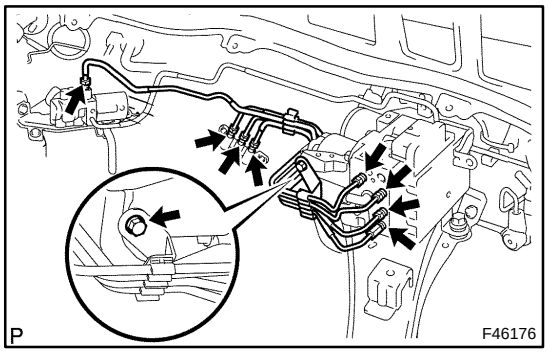

(h) Using SST, remove the bolt and the 4 brake tubes from the brake stroke simulator and brake actuator assy.
SST 09023–00100

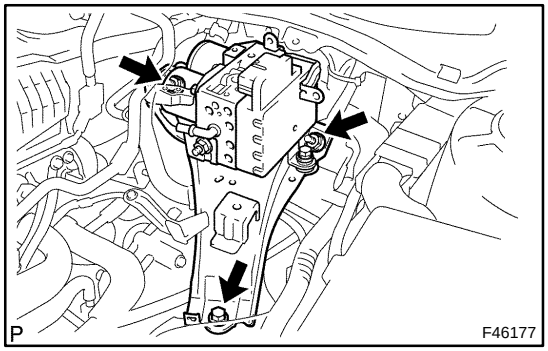

(i) Remove the bolt, 2 nuts and the brake actuator assy with gusset assy.

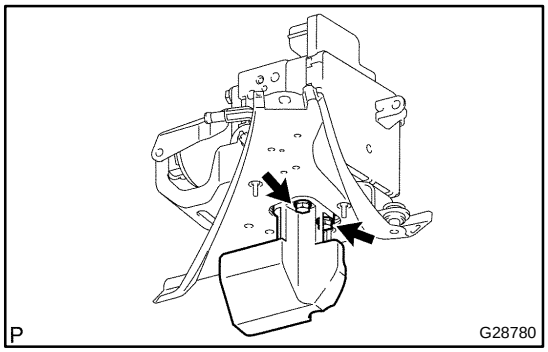

14. REMOVE BRAKE ACTUATOR ASSY

(a) Remove the 2 bolts and brake actuator damper.

cardiagn.com

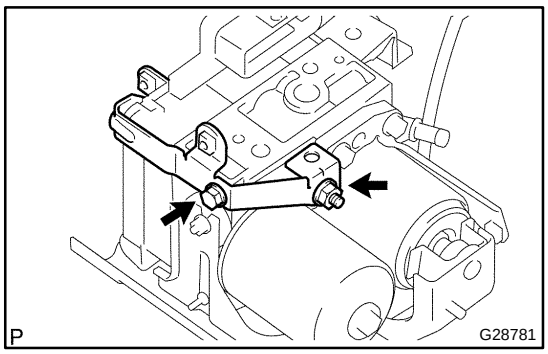

(b) Remove the bolt, nut, and the bracket from the brake actuator assy.

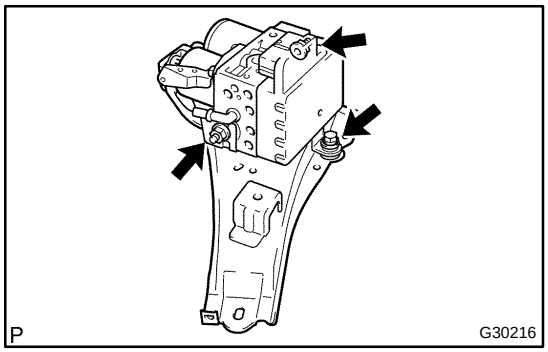

(c) Remove the 2 nuts, bolt, and the brake actuator assy from the gusset assy.

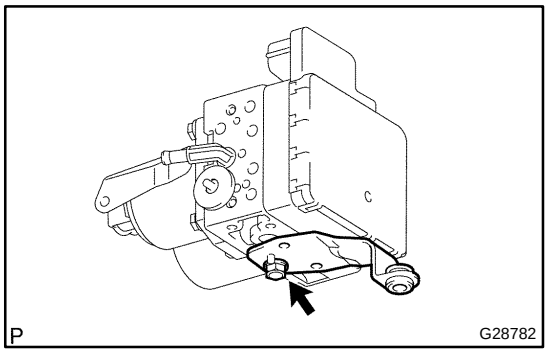

(d) Remove the bolt and brake actuator bracket No.2 from the brake actuator assy.

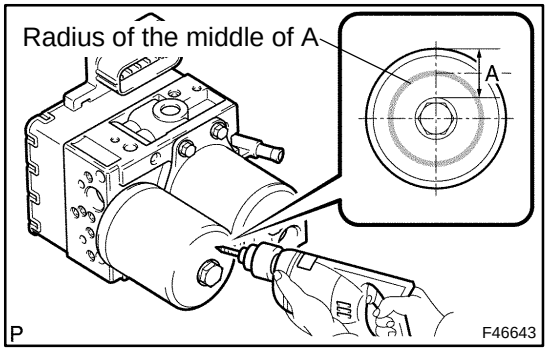

15. DISPOSE OF BRAKE ACTUATOR ASSY

(a) Using a drill, slowly make a hole at the radius indicated at the middle of A in the illustration and bleed the charged gas.

NOTICE:

Be sure to wear protective glasses as fragments may fly out due to pressure.

HINT:

- The hole may be drilled up to approximately 5mm to 10mm away from the point indicated by A without problem.
- The gas is nitrogen, which is colorless, odorless, and harmless.

cardiagn.com

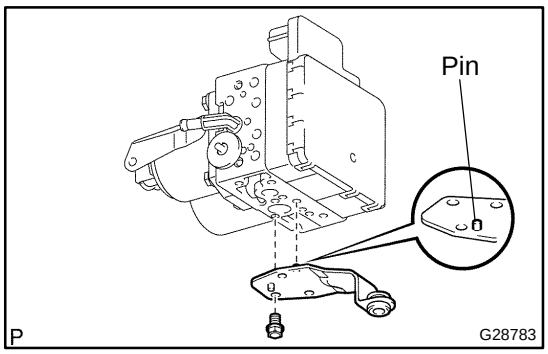

16. INSTALL BRAKE ACTUATOR ASSY

(a) Aligning the positioning pin, install the brake actuator bracket No.2 to the brake actuator assy with the bolt.
Torque: 18 N·m (184 kgf·cm, 13 ft·lbf)

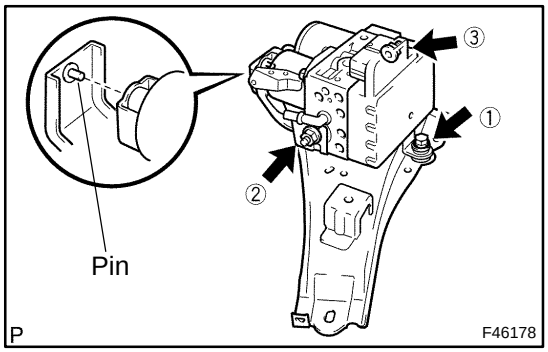

(b) Aligning the positioning pin, install the brake actuator assy to gusset assy with the 2 nuts and bolt.
Torque: 7.5 N·m (76 kgf·cm, 66 in.·lbf)

NOTICE:
Tighten the nuts and bolt in the order shown in the illustration.

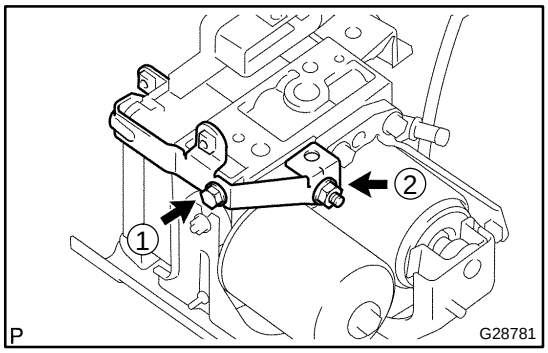

(c) Install the bracket to the brake actuator assy with the bolt and nut.
Torque: 18 N·m (184 kgf·cm, 13 ft·lbf)

NOTICE:
Tighten the nuts and bolt in the order shown in the illustration.

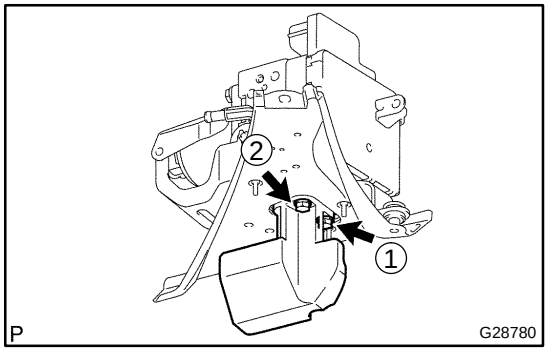

(d) Install the brake actuator damper to the brake actuator assy with the 2 bolts.
Torque: 18 N·m (184 kgf·cm, 13 ft·lbf)

NOTICE:
Tighten the bolts in the order shown in the illustration.

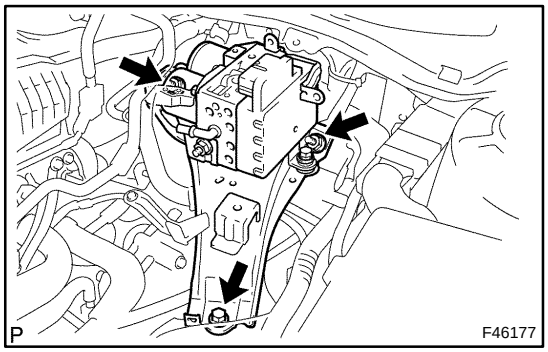

17. INSTALL BRAKE ACTUATOR WITH BRACKET

(a) Install the brake actuator assy and the gusset assy with the bolt and 2 nuts.
Torque: 20 N·m (200 kgf·cm, 15 ft·lbf)

cardiagn.com

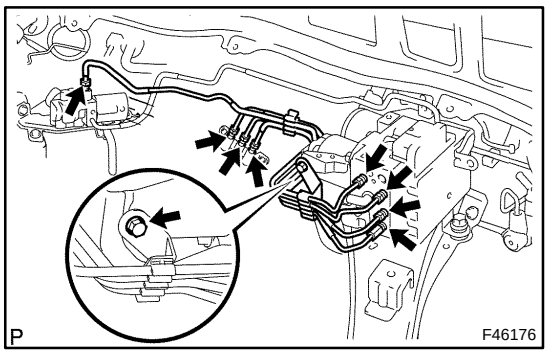

(b) Using SST, install the 4 brake tube to the brake stroke simulator and brake actuator assy.
SST 09023–00100
Torque: 15 N·m (155 kgf·cm, 11 ft·lbf)

(c) Set the brake tube with the clamp bracket bolt.
Torque: 5.0 N·m (51 kgf·cm, 44 in.·lbf)

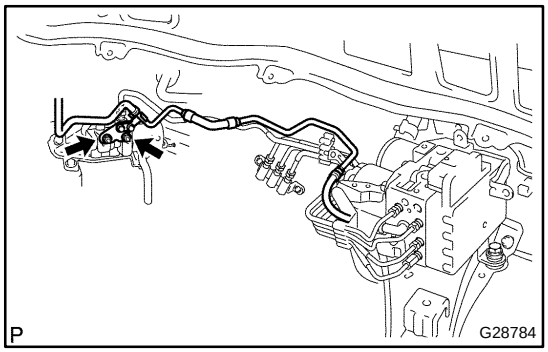

(d) Install the brake actuator tube assy with the 2 nuts.
Torque: 8.5 N·m (87 kgf·cm, 75 in.·lbf)

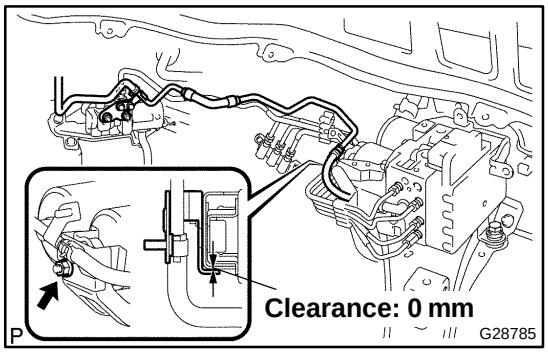

(e) Set the brake actuator tube assy with the nut.
Torque: 8.5 N·m (87 kgf·cm, 75 in.·lbf)

NOTICE:
Press the brake actuator tube assy so that there is no clearance between the bracket and the actuator tube assy as shown in the illustration, and tighten the nut.

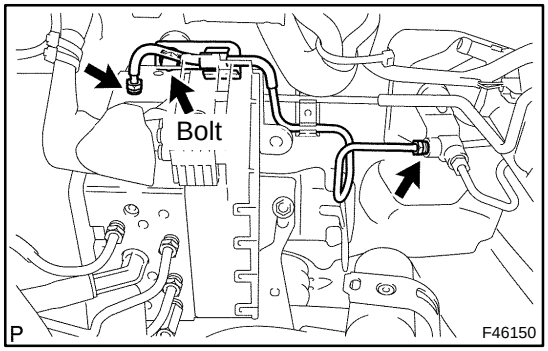

(f) Using SST, install the front brake tube No.1 to the brake actuator and 2 way.
SST 09023–00100
Torque: 15 N·m (155 kgf·cm, 11 ft·lbf)

(g) Install the bolt and the front brake tube No.1 to the bracket of the brake actuator assy.
Torque: 5.0 N·m (51 kgf·cm, 44 in.·lbf)

cardiagn.com

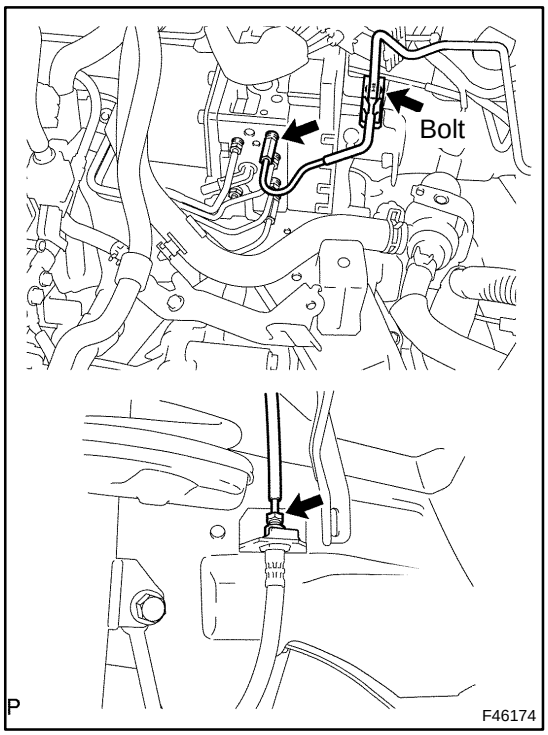

(h) Using SST, install the front brake tube No.5.
SST 09023–00100
Torque: 15 N·m (155 kgf·cm, 11 ft·lbf)

(i) Install the bracket of front brake tube No.5 with the bolt.
Torque: 5.0 N·m (51 kgf·cm, 44 in.·lbf)

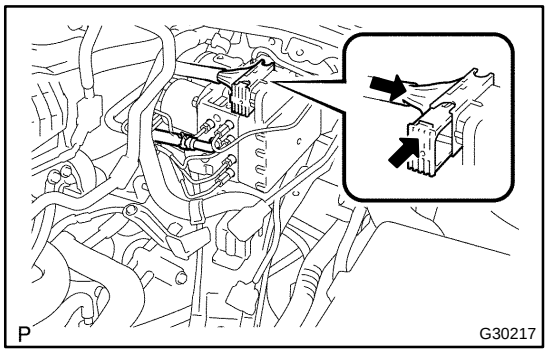

(j) Install the connector to the brake actuator assy, and fix it with the lock.

(k) Install the brake actuator hose No.2 to the brake actuator assy with the clip.

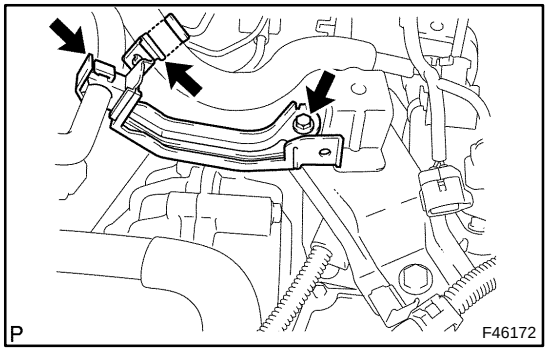

18. CONNECT WATER W/MOTOR & BRACKET PUMP ASSY

(a) Install the heater hose bracket to the gusset assy with the 2 clamps and bolt.

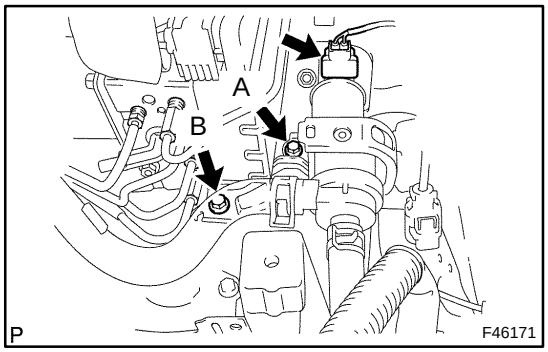

(b) Install the heater water pump assy with 2 bolts.

NOTICE:

Tighten bolt A and then bolt B.

(c) Connect the connector to the heater water pump assy.

cardiagn.com

19. INSTALL W/CONVERTER INVERTER ASSY (SEE PAGE 21–23)

HINT:

Refer to the procedures from the installation of the inverter assy with converter up untill the installation of the engine under cover LH.

20. INSTALL COWL TOP PANEL SUB–ASSY OUTER FRONT (SEE PAGE 32–24)

21. INSTALL WINDSHIELD WIPER MOTOR & LINK ASSY (SEE PAGE 66–14)

22. INSTALL FR WIPER ARM LH (SEE PAGE 66–14)

23. INSTALL FR WIPER ARM RH (SEE PAGE 66–14)

24. FILL RESERVOIR WITH BRAKE FLUID (SEE PAGE 32–4)

25. BLEED BRAKE ACTUATOR (SEE PAGE 32–4)

26. CHECK BRAKE FLUID LEAKAGE

27. CHECK FLUID LEVEL IN RESERVOIR

28. CHECK AND CLEAR DTC (SEE PAGE 05–975)

29. SYSTEM INITIALIZATION (SEE PAGE 05–958)

30. ACTIVE TEST (SEE PAGE 05–981)

cardiagn.com

FRONT SPEED SENSOR

3215I–01

REPLACEMENT

1. REMOVE FRONT WHEEL

2. REMOVE FRONT FENDER LINER

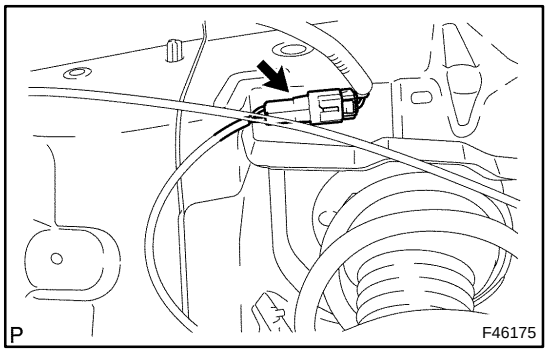

3. REMOVE FRONT SPEED SENSOR

(a) Disconnect the connector of the speed sensor front LH.

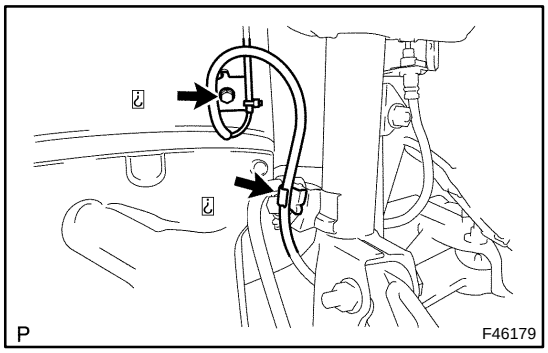

(b) Remove the bolt A and the bolt B. Remove the speed sensor front clamps from the body and front shock absorber.

HINT:

The bolt B is tightened together with the brake flexible hose clamp.

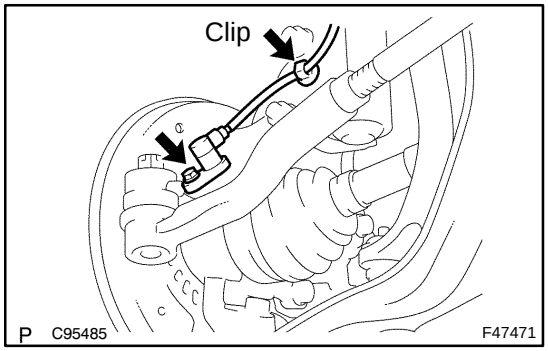

(c) Remove the clip from the front shock absorber.

(d) Remove the bolt and speed sensor front.

NOTICE:

Do not attach any foreign matter to the tip or connecting portion of the speed sensor front.

cardiagn.com

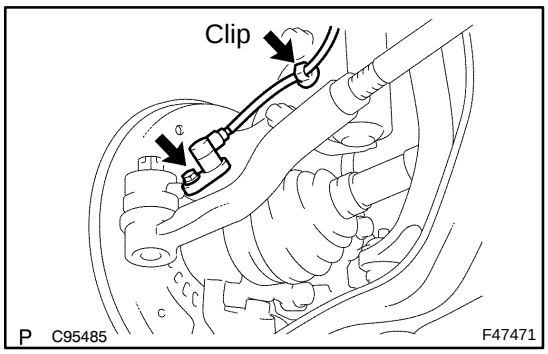

4. INSTALL FRONT SPEED SENSOR

NOTICE:

Do not twist the speed sensor front wire harnesses during installation.

(a) Install the speed sensor front with the bolt.
Torque: 8.0 N·m (82 kgf·cm, 71 in.·lbf)

NOTICE:

Check that there is no foreign matter attached to the tip and connecting portion of the speed sensor front.

HINT:

Clean the connecting portion of the speed sensor front.

(b) Install the clip to the front shock absorber.

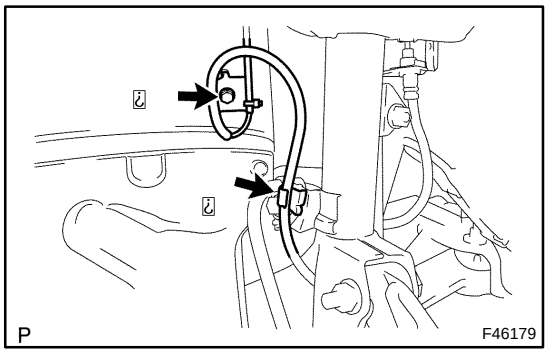

(c) Install the speed sensor front clamps to the body and front shock absorber with a bolt A and a bolt B.
Torque:
8.0 N·m (82 kgf·cm, 71 in.·lbf) (bolt A)
19 N·m (192 kgf·cm, 14 ft·lbf) (bolt B)

NOTICE:

Tighten the bolt B together with the brake flexible hose clamp and speed sensor front clamp. The brake flexible hose clamp should be placed above.

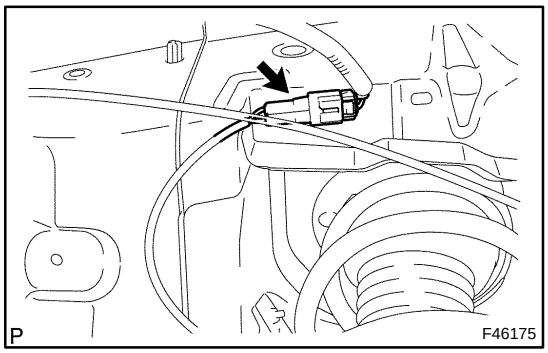

(d) Connect the connector of speed sensor front.

5. INSTALL FRONT FENDER LINER

6. INSTALL FRONT WHEEL
Torque: 103 N·m (1,050 kgf·cm, 76 ft·lbf)

7. CHECK ABS SPEED SENSOR SIGNAL (SEE PAGE 05–961)

cardiagn.com

SKID CONTROL SENSOR

3215J–01

REPLACEMENT

1. **REMOVE REAR WHEEL**
2. **REMOVE REAR BRAKE DRUM SUB–ASSY (SEE PAGE 32–42)**
3. **SEPARATE SKID CONTROL SENSOR WIRE**
4. **REMOVE REAR AXLE HUB & BEARING ASSY (SEE PAGE 30–27)**

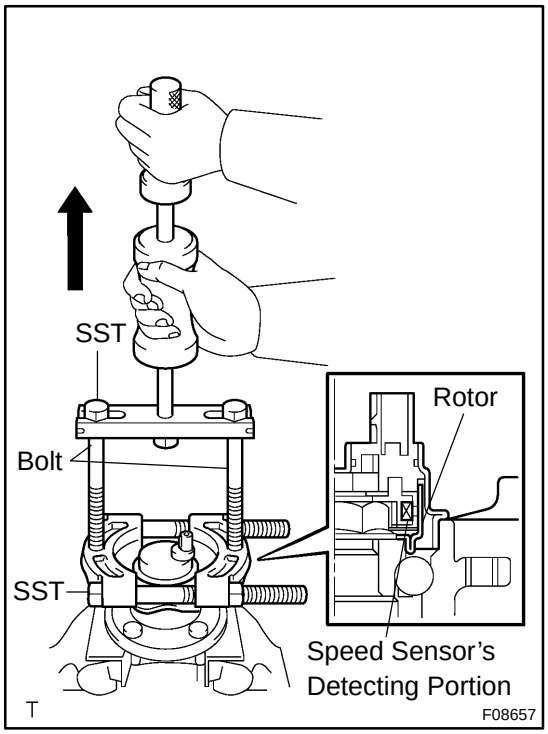

5. REMOVE SKID CONTROL SENSOR

(a) Install the 4 hub nuts to the 4 rear axle hub bolts. Placing an aluminum plate below the rear axle hub and bearing assy, place them into the vice.

NOTICE:

Replace the rear axle hub and bearing assy if it is dropped or receives a strong shock.

(b) Remove the 2 pins from the SST (09520–00031) and separate the attachment (09521–00010) using a pin punch (3 mm) or hammer.

(c) Remove the speed sensor from the rear axle hub and bearing assy using the SST and 2 bolts (90101–12007).
SST 09520–00031 (09520–00040), 09521–00020, 09950–00020

NOTICE:

- **Pull the speed sensor off straight, being careful not to make contact with the skid control sensor rotor.**
- **If the speed sensor rotor is damaged or deformed, replace the rear axle hub and bearing assy.**
- **Do not scratch the area where the speed sensor contacts the rear axle hub and bearing assy.**
- **Do not attach foreign matter to the speed sensor rotor.**

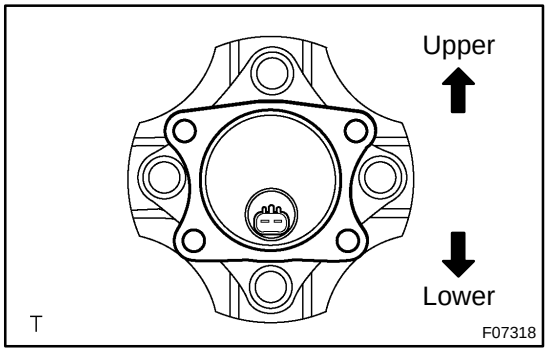

6. INSTALL SKID CONTROL SENSOR

(a) Wipe off sealant attached to the speed sensor's fitting surface with white gsoline.

NOTICE:

Prevent foreign matter from attaching to the sensor rotor.

(b) Install the speed sensor to the rear axle hub and bearing assy. The speed sensor connector should be placed in the lowest position.

HINT:

The narrow side of the rear axle hub and bearing assy should be placed below.

cardiagn.com

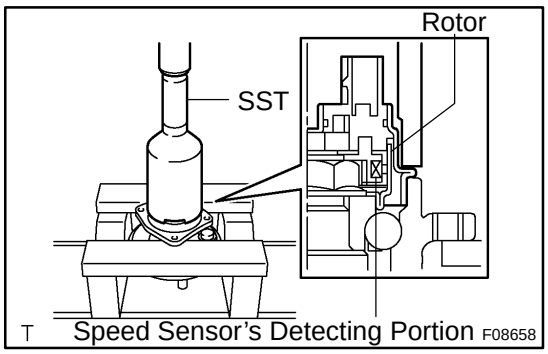

(c) Press the new speed sensor so that it becomes fluch with the rear axle hub and bearing using the SST and a press.
SST 09214–76011

NOTICE:

- **Do not use a hammer on the speed sensor.**
- **Check that there is no foreign matter such as iron chips on the speed sensor's detecting portion.**
- **Slowly press the speed sensor in straight.**

7. INSTALL REAR AXLE HUB & BEARING ASSY (SEE PAGE 30–27)
8. INSTALL SKID CONTROL SENSOR WIRE
9. INSTALL REAR BRAKE DRUM SUB–ASSY (SEE PAGE 32–42)
10. INSTALL REAR WHEEL
Torque: 103 N·m (1,050 kgf·cm, 76 ft·lbf)
11. INSPECT REAR WHEEL ALIGNMENT (SEE PAGE 27–3)
12. CHECK ABS SPEED SENSOR SIGNAL (SEE PAGE 05–961)

cardiagn.com

BRAKE PEDAL STROKE SENSOR ASSY

3215K–01

REPLACEMENT

1. **REMOVE INSTRUMENT PANEL REGISTER ASSY NO.1 (SEE PAGE 71–13)**
2. **REMOVE INSTRUMENT PANEL FINISH PANEL SUB–ASSY LOWER (SEE PAGE 71–13)**

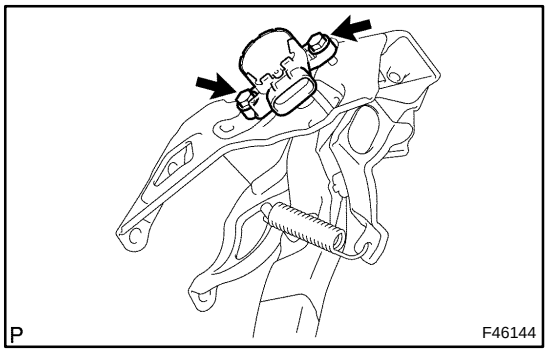

3. **REMOVE BRAKE PEDAL STROKE SENSOR ASSY**
(a) Disconnect the connector of the brake pedal stroke sensor.
(b) Remove the 2 bolts and brake pedal stroke sensor.

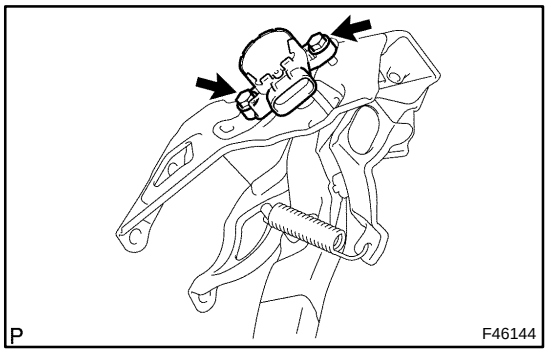

4. **INSTALL BRAKE PEDAL STROKE SENSOR ASSY**
(a) New brake pedal stroke sensor.
(1) Install the brake pedal stroke sensor to the brake pedal support with the 2 bolts.
Torque: 9.3 N·m (95 kgf·cm, 82 in.·lbf)

NOTICE:
- **Engage the brake pedal stroke sensor lever with the brake pedal groove.**
- **Check that there is no foreign matter attached to the brake pedal stroke sensor's contacting surface.**

(2) Strongly depress the brake pedal and break the brake pedal stroke sensor lever set pin.
(3) Remove the broken lever set pin.
(4) Connect the brake pedal stroke sensor connector.
(b) Reuse of brake pedal stroke sensor
(1) Temporarily install the brake pedal stroke sensor to the brake pedal support with 2 bolts.

NOTICE:
- **Engage the brake pedal stroke sensor lever with the brake pedal groove.**
- **Check that there is no foreign matter attached to the brake pedal stroke sensor's contacting surface.**

cardiagn.com

(2) Connect the hand–held tester to the DLC3.
(3) Connect the connector of the brake pedal stroke sensor.

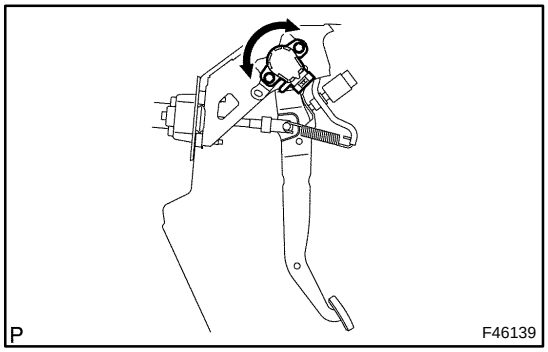

(4) Turn the power switch on (IG). Reading the stroke sensor 1 value shown on the data monitor, turn the stroke sensor slowly to the right and left to adjust it to the standard value.

Standard value: 0.8 to 1.2 V

(5) Tighten the bolts.

Torque: 9.3 N·m (95 kgf·cm, 82 in.·lbf)

NOTICE:

Do not depress the brake pedal after turning the power switch on (IG).

(c) Carry out system initialization (see page 05–958).

5. INSTALL INSTRUMENT PANEL FINISH PANEL SUB–ASSY LOWER

6. INSTALL INSTRUMENT PANEL REGISTER ASSY NO.1

cardiagn.com

SKID CONTROL ECU ASSY

3215L–01

REPLACEMENT

1. **DISCONNECT BATTERY NEGATIVE TERMINAL**
2. **REMOVE INSTRUMENT PANEL SUB–ASSY W/PASSENGER AIRBAG ASSY (SEE PAGE 71–7)**
3. **REMOVE STEERING COLUMN ASSY (SEE PAGE 50–8)**

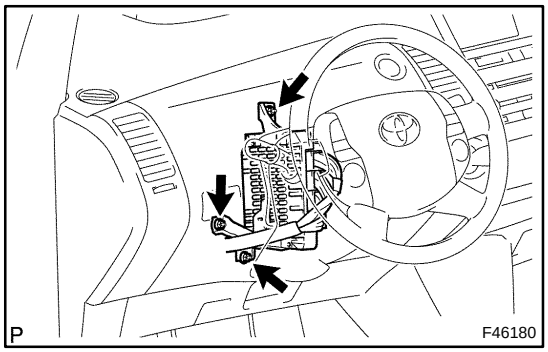

4. **REMOVE SKID CONTROL ECU ASSY**
   (a) Disconnect the clamp of wire harness and the skid control buzzer from the skid control computer bracket.
   (b) Disconnect the connector from the skid control computer.
   (c) Remove the 3 nuts and the skid control computer assy.

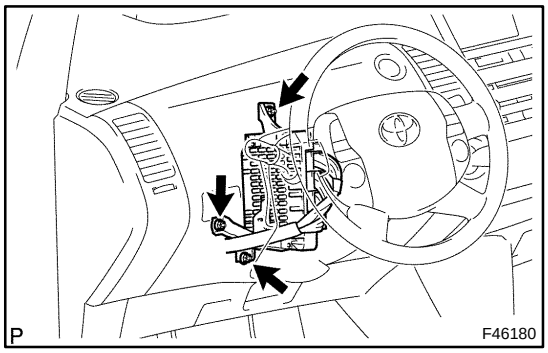

5. **INSTALL SKID CONTROL ECU ASSY**
   (a) Install the skid control computer assy with the 3 nuts.
   Torque: 5.0 N·m (51 kgf·cm, 44 in.·lbf)
   (b) Connect the connector to the skid control computer assy.
   (c) Install the clamp of wire harness and the skid control buzzer to the skid control computer bracket.

6. **INSTALL STEERING COLUMN ASSY (SEE PAGE 50–8)**
7. **INSTALL INSTRUMENT PANEL SUB–ASSY W/PASSENGER AIRBAG ASSY**
8. **CONNECT BATTERY NEGATIVE TERMINAL**
9. **PERFORM INITIALIZATION (SEE PAGE 01–5)**
10. **SYSTEM INITIALIZATION (SEE PAGE 05–958)**
11. **PERFORM YAWRATE SENSOR ZERO POINT CALIBRATION (SEE PAGE 05–960)**
12. **CHECK AND CLEAR DTC (SEE PAGE 05–975)**

cardiagn.com

BRAKE CONTROL POWER SUPPLY ASSY

3215M–01

REPLACEMENT

1. REMOVE REAR SEAT CUSHION ASSY (SEE PAGE 72–9)

2. REMOVE DECK TRIM SIDE PANEL ASSY RH (SEE PAGE 76–28)

HINT:

Refer to the procedures from the removal of the rear door scuff plate RH up until the removal of the deck trim side panel assy RH.

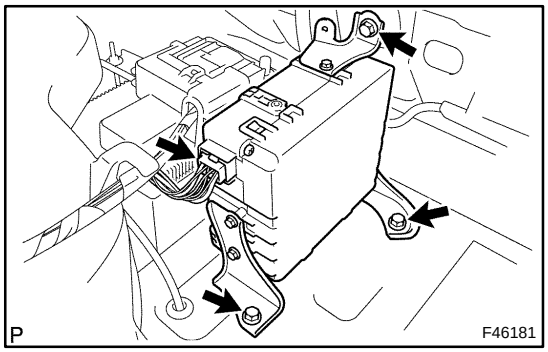

3. REMOVE BRAKE CONTROL POWER SUPPLY ASSY

(a) Disconnect the connector and remove the 3 bolts and the brake control power supply assy.

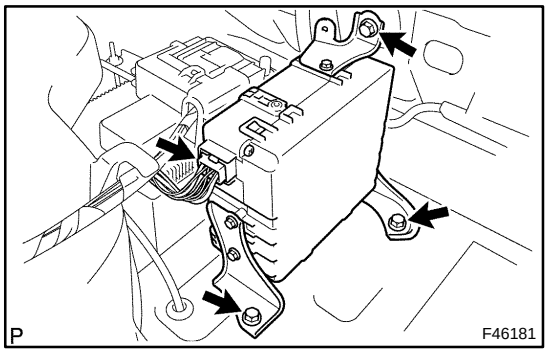

4. INSTALL BRAKE CONTROL POWER SUPPLY ASSY

(a) Install the brake control power supply assy with the 3 bolts.

Torque: 19 N·m (194 kgf·cm, 14 ft·lbf)

(b) Connect the connector to the brake control power supply assy.

5. INSTALL DECK TRIM SIDE PANEL ASSY RH

6. INSTALL REAR SEAT CUSHION ASSY (SEE PAGE 72–9)

7. CHECK AND CLEAR DTC (SEE PAGE 05–975)

cardiagn.com

YAWRATE SENSOR

3215N–01

REPLACEMENT

1. **REMOVE CONSOLE PANEL SUB–ASSY UPPER (SEE PAGE 71–17)**
2. **REMOVE CONSOLE BOX POCKET (SEE PAGE 71–17)**
3. **REMOVE CONSOLE BOX CARPET (SEE PAGE 71–17)**
4. **REMOVE CONSOLE BOX ASSY RR (SEE PAGE 71–17)**

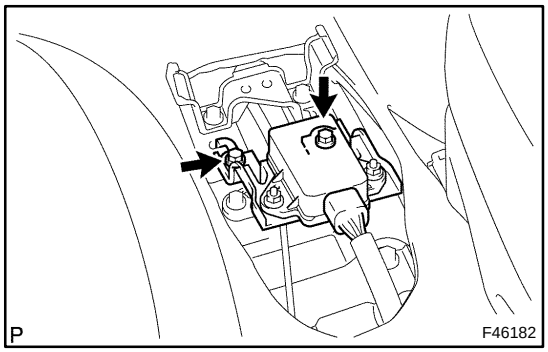

5. **REMOVE YAWRATE SENSOR**

(a) Disconnect the connector and remove the 2 bolts and the yawrate sensor assy.

6. **INSTALL YAWRATE SENSOR**

(a) Install the yawrate sensor assy with 2 bolts.
Torque: 19 N·m (194 kgf·cm, 14 ft·lbf)

(b) Connect the connector of yawrate sensor assy.

7. **INSTALL CONSOLE BOX ASSY RR**
8. **INSTALL CONSOLE BOX CARPET**
9. **INSTALL CONSOLE BOX POCKET**
10. **INSTALL CONSOLE PANEL SUB–ASSY UPPER**
11. **PERFORM YAWRATE SENSOR ZERO POINT CALIBRATION (SEE PAGE 05–960)**
12. **CHECK AND CLEAR DTC (SEE PAGE 05–975)**

cardiagn.com

STEERING SENSOR

3215O–01

REPLACEMENT

1. **DISCONNECT BATTERY NEGATIVE TERMINAL (SEE PAGE 60–1)**
2. **REMOVE STEERING WHEEL COVER LOWER NO.2**
3. **REMOVE STEERING WHEEL COVER LOWER NO.3**
4. **REMOVE HORN BUTTON ASSY (SEE PAGE 60–20)**
5. **REMOVE STEERING WHEEL ASSY (SEE PAGE 50–8)**
   SST 09950–50013 (09951–05010, 09952–05010, 09953–05020, 09954–05021)
6. **REMOVE TILT LEVER BRACKET (SEE PAGE 50–8)**
7. **REMOVE STEERING COLUMN COVER (SEE PAGE 50–8)**
8. **REMOVE SPIRAL CABLE SUB–ASSY (SEE PAGE 60–29)**
9. **REMOVE STEERING SENSOR**

(a) Unclamp the 6 claws and remove the steering sensor from the spiral cable.

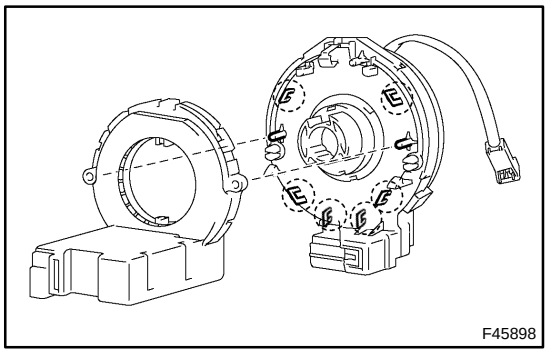

10. **INSTALL STEERING SENSOR**

(a) Aligning the 2 locating pins as shown in the illustration, engage the 6 claws and install the steering sensor to the spiral cable.

11. **INSPECT SPIRAL CABLE SUB–ASSY (SEE PAGE 60–29)**
12. **PLACE FRONT WHEELS FACING STRAIGHT AHEAD**
13. **INSTALL SPIRAL CABLE SUB–ASSY (SEE PAGE 60–29)**
14. **CENTER SPIRAL CABLE (SEE PAGE 60–29)**
15. **INSTALL STEERING COLUMN COVER (SEE PAGE 50–8)**
16. **INSTALL TILT LEVER BRACKET (SEE PAGE 50–8)**
17. **INSTALL STEERING WHEEL ASSY (SEE PAGE 50–8)**
18. **INSTALL HORN BUTTON ASSY (SEE PAGE 60–20)**
19. **INSPECT HORN BUTTON ASSY (SEE PAGE 60–14)**
20. **CONNECT BATTERY NEGATIVE TERMINAL**
21. **PERFORM INITIALIZATION (SEE PAGE 01–5)**
22. **INSPECT SRS WARNING LIGHT (SEE PAGE 05–1405)**

cardiagn.com