PORSCHE
MOTORSPORT

911 GT3 Cup

Technical Manual
2012 Model

Downloaded from www.Manualslib.com manuals search engine

Preface

This technical information will give you the possibility to reference data, adjustment values and working procedures and make the maintenance and repair work on the vehicle easier.

We wish you every success with your GT3 Cup

Dr. Ing. h.c. F. Porsche
Aktiengesellschaft
Vertrieb Sonder- und Rennfahrzeuge

Downloaded from www.Manualslib.com manuals search engine

Race car 911 GT3 Cup Model 2012

This car is specifically designed for participation in one-make cup competitions.

For obvious reasons, measurements referring to bodywork dimensions of the production cars cannot be used as reference.

Porsche accepts no guarantee that the vehicle conforms to the regulations.

The car can not be registered for road use and does not comply with German road traffic regulations.

Illustrations, descriptions and schematic drawings serve exclusively as presentation for the text. Porsche Motorsport accepts no liability for the completeness and conformity of the contents of this brochure with respect to the legality of the current regulations.

Downloaded from www.Manualslib.com manuals search engine

Contents

1. CONTACTS 4

2. GENERAL TECHNICAL DATA 5

2.1. Dimensions 5

2.2. Weight 5

3. ENGINE 6

3.1. Engine technical data 6

3.2. Engine power and torque curves 7

3.3. Engine lubrication 8

3.4. Engine cooling system 12

3.5. Induction system 18

3.6. Throttle butterfly 18

3.7. Working on the engine 23

3.8. Engine component tightening torques 36

3.9. Engine mileage 37

4. FUEL AND EXHAUST SYSTEM 38

4.1. Fuel system 38

4.2. Fuel cell 39

4.3. Exhaust system 42

5. GEARBOX 46

5.1. Technical data gearbox 46

Gearbox layout 47

5.2. 47

5.3. Modifications 2012 model 48

5.4. Gearbox lubrication 49

5.5. Ratio chart 49

5.6. Gear recognition 50

Downloaded from www.Manualslib.com manuals search engine

5.7. Changing gear 51

5.8. Differential 53

5.9. Clutch 54

5.10. Working on the gearbox 57

5.11. Tightening torques gearbox 79

5.12. Gearbox mileage 79

6. SUSPENSION 80

6.1. Front suspension 80

6.2. Rear suspension 84

6.3. Basic wheel alignment 87

6.4. Wheel alignment procedure 88

6.5. Working on the suspension 95

6.6. Tightening torques suspension 96

6.7. Sachs damper service information 106

7. WHEELS 108

8. BRAKE SYSTEM 110

8.1. Technical data brake system (steel) 110

8.2. Technical data brake system (PCCB) 110

8.3. Brake force distribution (brake balance) 111

8.4. Brake caliper 118

8.5. PCCB brake disk information 118

8.6. Tightening torques brake system 119

9. CHASSIS 120

9.1. Interior 120

9.2. Exterior 120

9.3. Rear wing 121

9.4. Fire extinguisher system 122

Downloaded from www.Manualslib.com manuals search engine

9.5. Air-jack system 124

10. ELECTRIC 126

10.1. Alternator 126

10.2. Battery 126

10.3. Steering wheel 126

10.4. Centre console 128

10.5. Shift Light Module 129

10.6. MoTeC Dash 130

10.7. Car sensors 134

10.8. Engine Control Unit (ECU) 136

10.9. Relay- and fuse assignment 137

10.10. Fuse carrier 138

11. CAR MAINTENANCE 139

11.1. After approx. 200 km and/or first test 139

11.2. After every session 139

11.3. After every race weekend (sprint) 140

11.4. After 3 - 4 race weekends (sprint) 140

11.5. After 20 respectively 30 hours running time 140

11.6. After 50 hours running time 140

11.7. Operating fluids 141

Downloaded from www.Manualslib.com manuals search engine

1. Contacts

International One Make Cups	**Mr Michael Dreiser**	**0711 911 82684**
Assistant	Mrs Juliane Gründl	0711 911 82683
Technical support	Mr Marcus Stolzenthaler	0711 911 82498
		Fax: 0711 911 82920

Porsche Mobil 1 Supercup	**Mr Jonas Krauss**	**0711 911 84042**
Assistant	Mrs Jennifer Biela	0711 911 84096
Technical support	Mr Steffen Höllwarth	0711 911 89922
		Fax: 0711 911 82920

Porsche Carrera Cup Germany	**Mr Helmut Greiner**	**0711 911 84074**
Assistant	Mrs Andrea Hagenbach	0711 911 84041
Technical support	Mr Stefan Rometsch	0711 911 84613
		Fax: 0711 911 82920

Sport parts sales	**Mr Friedrich Weseler**	**0711 911 89854**
	Mr Karlheinz Kienle	0711 911 82923
	Mr Klaus Lenzner	0711 911 82423
	Mr Christian Müller	0711 911 89175
	Mr Salvatore Scozzaro	0711 911 83738
	Mr Emanuel Donno	0711 911 82687
		Fax: 0711 911 82808

Downloaded from www.Manualslib.com manuals search engine

2. General technical data

Engine type	M 97/78
Gearbox type	G 97/63
Numbers of gears	sequential 6

2.1. Dimensions

Length (w/o spoiler edge)	[mm]	4423
Width across front axle	[mm]	1787
Width across rear axle	[mm]	1859
Wheelbase	[mm]	2353

2.2. Weight

Dry weight	[kg]	appr. 1200

With steel brakes, without front exhaust silencer

Downloaded from www.Manualslib.com manuals search engine

3. Engine

The engine is based on the power unit fitted to the road approved 911 GT3 and is specially modified for motorsport purposes.

The engine is fitted with a dry sump lubrication system; the oil tank is mounted directly on the engine. The engine oil is cooled by an oil-water heat-exchanger integrated in the cooling system.

3.1. Engine technical data

Engine type		M97/78
Design		Six-cylinder boxer
Cylinders		6
Bore	[mm]	102.7
Stroke	[mm]	76.4
Cubic capacity	[cm³]	3797
Compression ratio		approx. 12 : 1
Maximum revs	[rpm]	8,500
Inlet valve diameter	[mm]	41
Inlet valve lift	[mm]	12.0
Point of maximum inlet valve lift	[°]	105 after TDC
Exhaust valve diameter	[mm]	35.5
Exhaust valve lift	[mm]	12.0
Point of maximum exhaust valve lift	[°]	110 before TDC
Cooling media		Water cooled
Lubrication		Dry sump lubrication Oil-water heat-exchanger

Downloaded from www.Manualslib.com manuals search engine

3.2. Engine power and torque curves

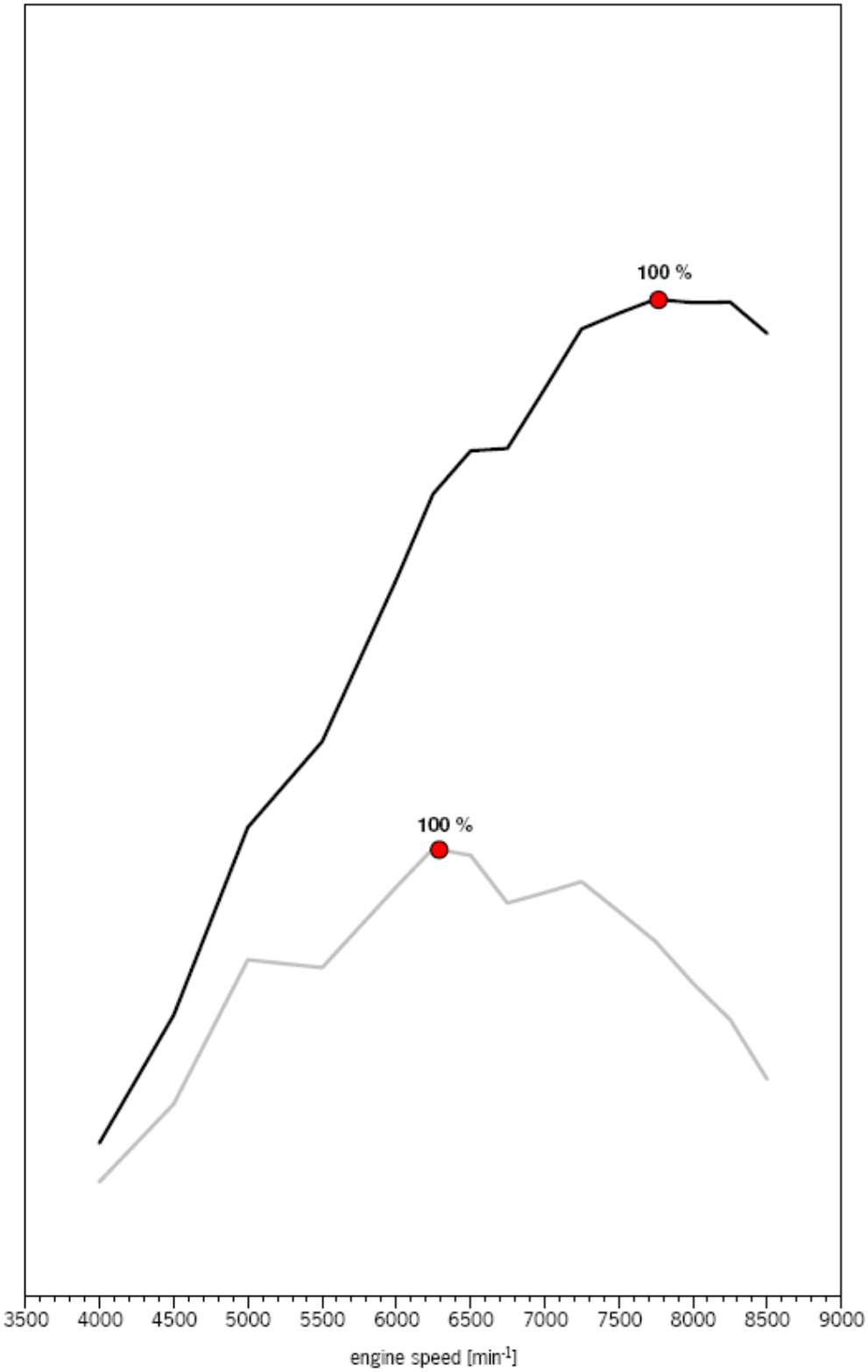

Downloaded from www.Manualslib.com manuals search engine

3.3. Engine lubrication

The 911 GT3 is equipped with a dry sump lubrication system. The oil tank is mounted to the engine.

The engine oil is cooled by an oil-water heat-exchanger mounted on the engine.

3.3.1. Engine oil

Mobil 1 0W - 40
Mobil 1 5W - 40

Downloaded from www.Manualslib.com manuals search engine

3.3.2. Engine oil system

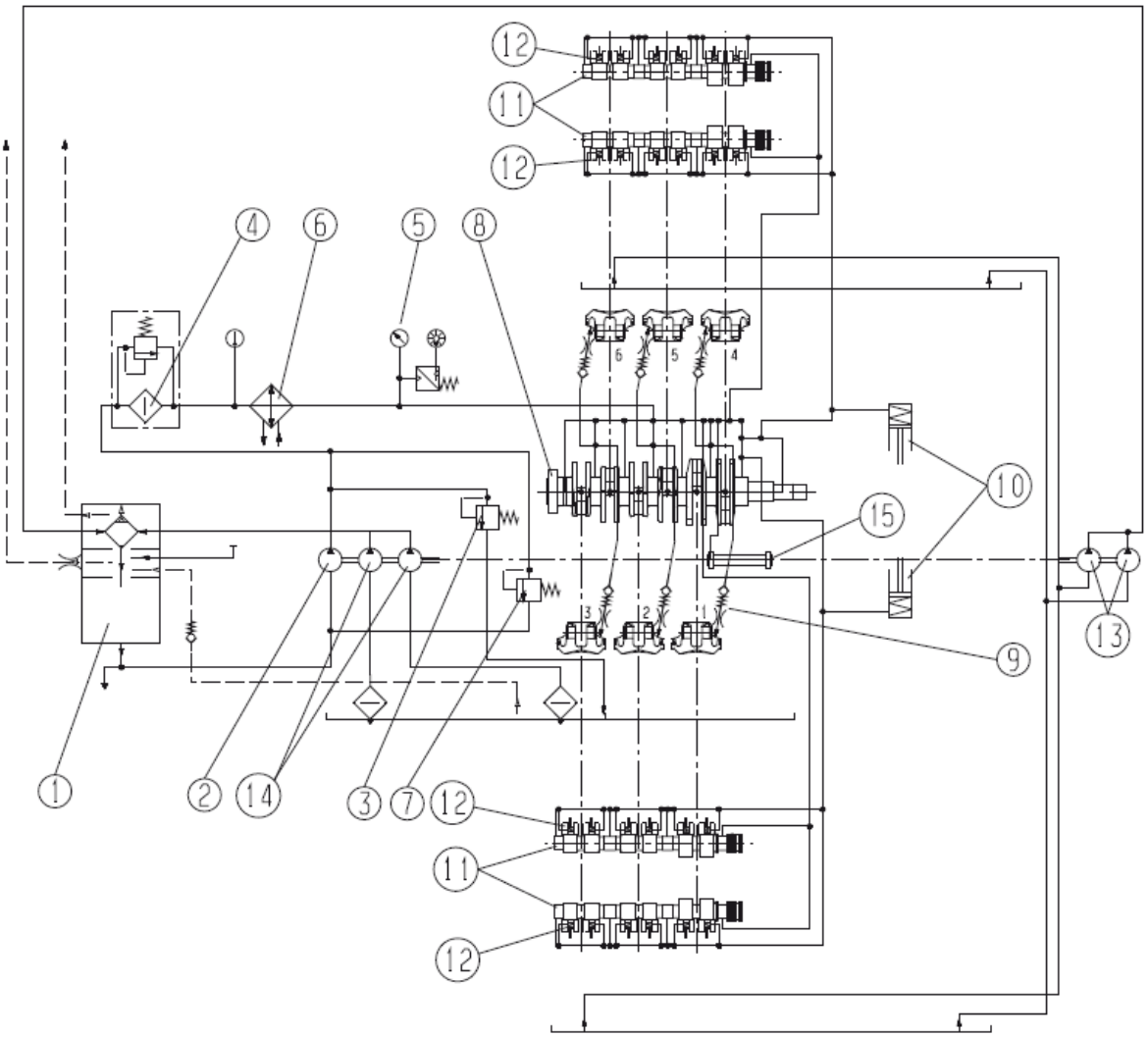

Vereinfachte Darstellung
simplified representation

1 – Oil tank
2 – Pressure pump
3 – Safety valve
4 – Oil filter
5 – Pressure sensor
6 – Oil-water heat-exchanger
7 – Pressure relief valve
8 – Crankshaft
9 – Piston cooling
10 – Timing chain tensioner
11 – Camshaft
12 – Hydraulic valve lifter
13 – Camshaft housing scavenge pump
14 – Crankcase scavenge pump
15 – Balance shaft

Downloaded from www.Manualslib.com manuals search engine

3.3.3. Checking the oil level

The engine oil temperature must be over 80°C and the engine running at idle speed (approx 2,000 rpm) to measure the oil level correctly. The oil level must be between the two marks on the dip-stick. The distance between the two marks corresponds to 1 litre of engine oil.

An excessively high oil level can lead to oil entering the induction tract.

If engine oil is added it should be noted that this oil only flows slowly into the oil tank through the dip-stick guide sleeve. Therefore the oil level should only be measured again after waiting for a few minutes.

The engine oil level must be checked regularly and corrected when necessary especially when the engine is new. Oil pressure signal drop outs in the MoTeC data logging are a clear indication for low oil level. Therefore the oil pressure must be carefully and regularly monitored. (e.g. with MoTeC). The MoTeC oil pressure alarm is active if the oil pressure falls below 2.5 bar for at least one second at an engine speed of 2,500 rpm or greater (for a minimum of two seconds).

3.3.4. Filling capacities

New engine:	11.0 l
With oil filter change:	8.3 l
Without oil-filter change	8.1 l

Downloaded from www.Manualslib.com manuals search engine

3.3.5. Digital oil level display

An optional oil level display is available (997.641.139.9A):

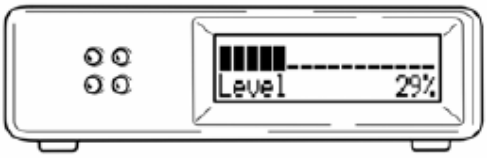

The car wiring loom is already prepared for use of this display. The connector for the display is located in the area of the rear side-window on right-hand side of the car.

In addition, the oil level sensor 996.606.140.00 is necessary for displaying the oil level. The sensor is plugged in the oil tank.

Attention: Do not fill above 90 %

Downloaded from www.Manualslib.com manuals search engine

3.4. Engine cooling system

The GT3 Cup cooling system is a standard cooling system optimised for use in a race car.

3.4.1. Scheme drawing

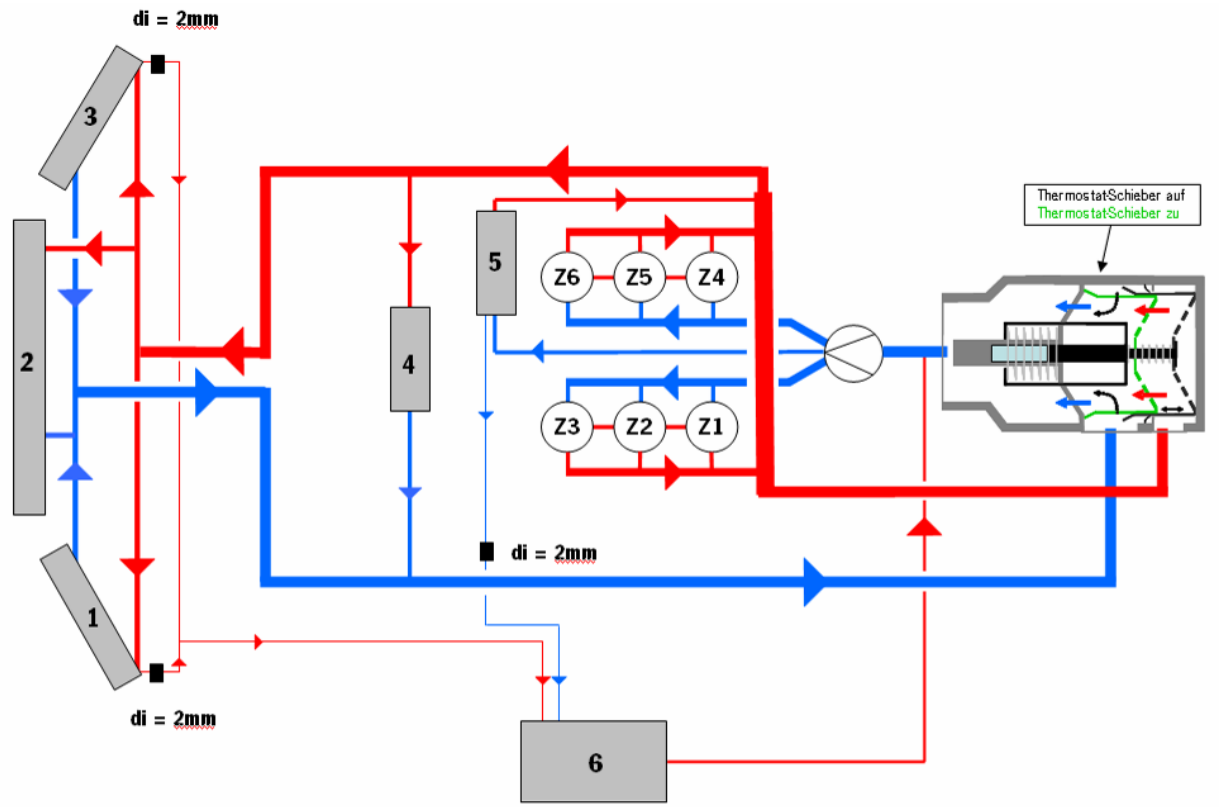

1 – Left-hand side cooler
2 – Centre cooler
3 – Right-hand side cooler
di – Bleed throttle
4 – Gearbox heat-exchanger
5 – Engine heat-exchanger
6 – Cooling water expansion tank

3.4.2. Thermostat

The thermostat fitted starts to open when the water temperature exceeds 60°C. The thermostat is completely open from 72°C.

Downloaded from www.Manualslib.com manuals search engine

3.4.3. Cooling fluid

The cooling system if filled with 11 litres of water and 11 litres of anti-freeze when delivered. The coolant remains fluid to temperatures of -30°C in delivery specification with this water/anti-freeze ratio.

For all race events Porsche Motorsport recommends that the factory filled engine coolant is replaced by 20 litres of water and 2 litres of anti-corrosion additive (part number. 997.106.907.90), which protects the water galleries and other cooling system parts from corrosion, reduces cavitation, lubricates the water pump and increases the boiling point of the cooling water.

For Cup races supporting Formula 1 events the coolant must be changes as described below: Approx 20 litres water plus minimum 2 litres anti-corrosion additive part number 997.106.907.90.

3.4.3.1. Capacity

Approx 22 litres

Downloaded from www.Manualslib.com manuals search engine

3.4.4. Filling the cooling system

A quick-release coupling is integrated in the engine bay in the area of the expansion tank. The water system can be filled and bled quickly and safely via this coupling – after an engine change for example.

Quick release coupling

When the water system has reached its operating temperature, the expansion tank cap should under no circumstances be opened and the pressure released. Since the operating temperature has already been achieved the water pressure cannot be built up again. This system pressure is necessary to increase the coolant boiling point.

Downloaded from www.Manualslib.com manuals search engine

Valves in the expansion tank allow the exhaust of steam at a pressure of 1.4 bar, and the release of water at a pressure of 1.8 – 2.0 bar.

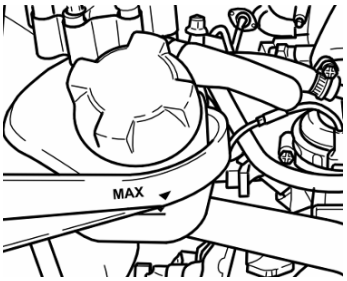

The bleed valve in the standard production car improves the initial reaction from the heating system; the valve remains open in the race car system allowing the system to be bled continuously.

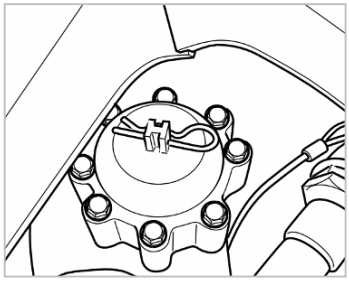

A special filling system available from Sobek should be used to fill the water system. The filling system consists of an electric pump that pumps water from a tank into the system.

Bernd Sobek – Mattern
Fliederstr. 10
D – 69517 Gorxheimertal
Tel +49 (0) 6201 2051
Fax +49 (0) 6201 21834
www.sobek-motorsporttechnik.eu

Downloaded from www.Manualslib.com manuals search engine

Filling the system should be carried out as follows:

- Disconnect the quick release fittings in the engine bay and connect the corresponding fittings with those of the filling system
- Switch on the pump, the system will be filled
- The device must run for ten minutes to guarantee that the system is correctly filled and bled
- Warm-up the engine (80°C) and, if required, fill the reservoir to the maximum level with the filling device still attached
- **The expansion tank cap must be closed throughout the entire procedure**

3.4.4.1. Filling the cooling system with engine at normal operating temperature:

A special filling system to fill the engine water system when the engine is at normal operating temperature is also available from Sobek. This appliance consists of a fluid reservoir with a coupling. The reservoir is charged with a pressure of 2.5 – 3.0 bar.

The system filling procedure must be carried out as follows:

- Disconnect the quick release fitting in the engine bay and connect the filling system coupling to the corresponding end of the quick-release fitting.
- The system is filled via the expansion tank.

Downloaded from www.Manualslib.com manuals search engine

3.4.4.2. Filling the cooling system with pre-heated water

A special filling system to fill the engine water system when the engine is at normal operating temperature is also available from Sobek.

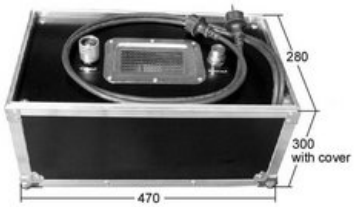

Downloaded from www.Manualslib.com manuals search engine

3.5. Induction system

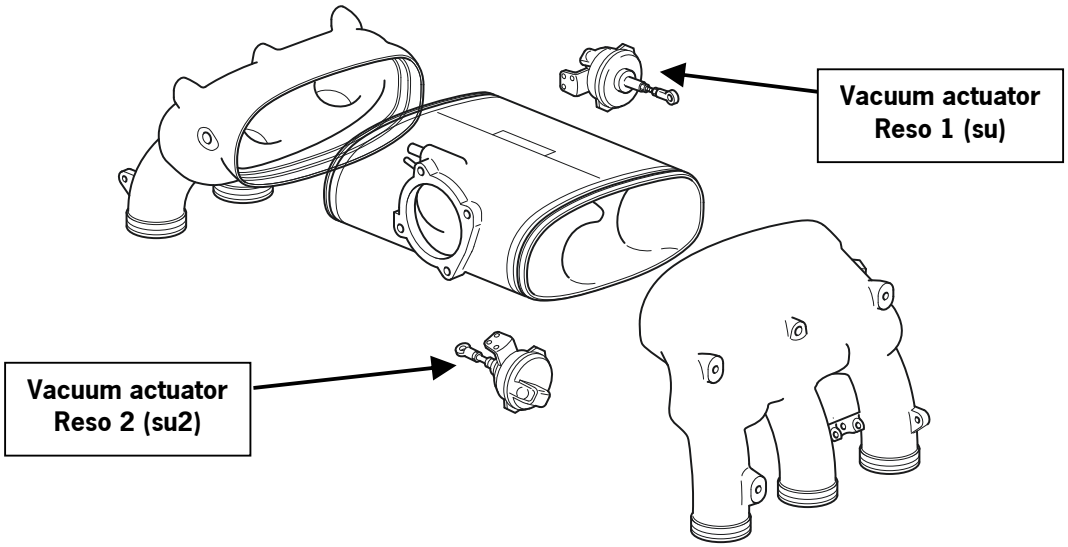

- Four-stage resonance induction system
- Activated by vacuum actuator resonance valves (x2)

3.6. Throttle butterfly

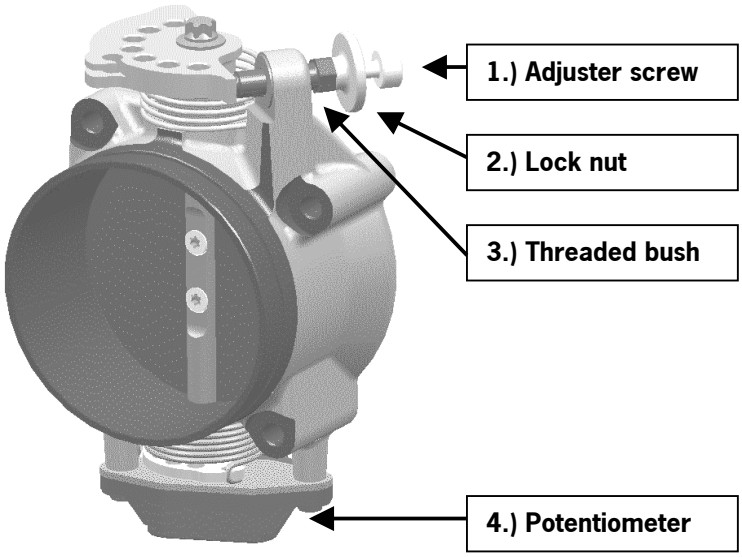

- Mechanical single throttle butterfly without by-pass
- Idle speed set via adjuster screw

Downloaded from www.Manualslib.com manuals search engine

3.6.1. Throttle cable

Compensation of the throttle-cable length is made by the spring fitted in the connecting piece. To achieve this the spring is tensioned and/or un-tensioned by rotating the connection piece.

We point out that it is imperative to ensure the complete locking of all 3 clips of the housing of the connecting piece.

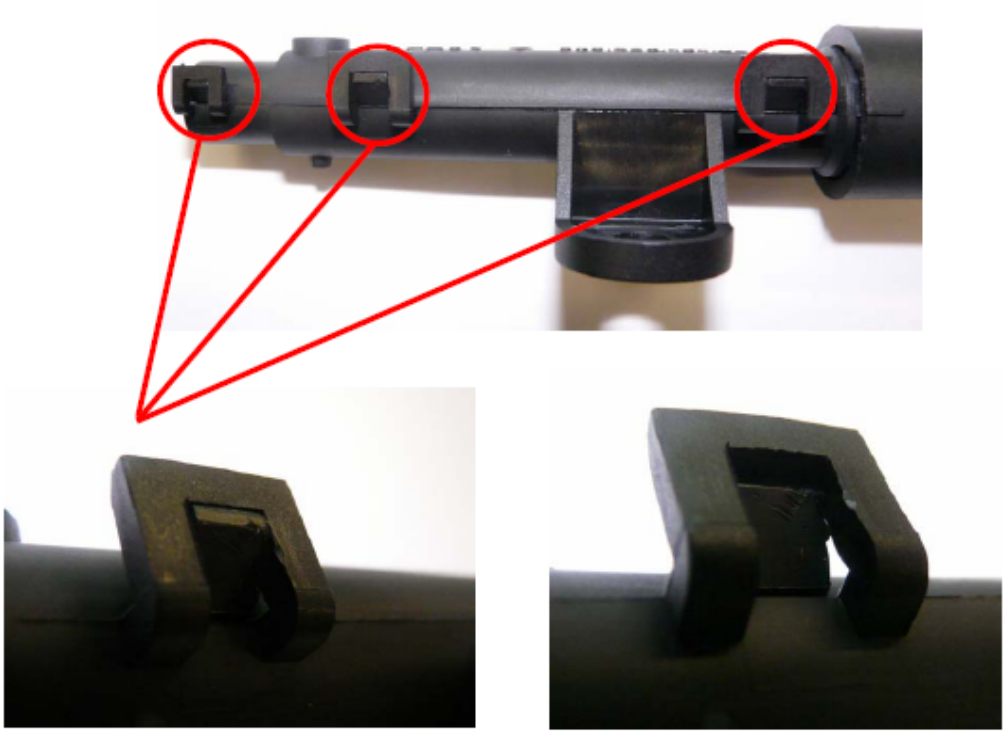

Lasche vollständig eingerastet.
Clip completely locked in place.

Lasche nicht vollständig eingerastet.
Clip not completely locked in place.

Downloaded from www.Manualslib.com manuals search engine

3.6.1.1. Tension-free setting of the throttle cable

Before calibrating the throttle-butterfly potentiometer the throttle cable must be set “tension-free”:

1. Rotate the throttle cable in the direction “auf” on the connecting part behind the driver seat

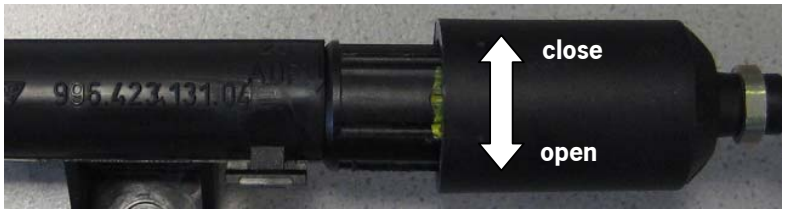

2. Press the two halves of the connecting part together
3. Rotate the throttle cable in the direction “zu”

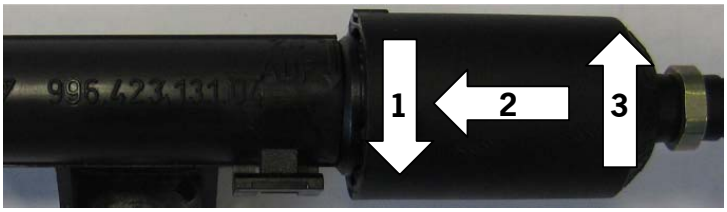

The throttle cable has play in this position. Tasks such as throttle butterfly reset can now be carried out.

Downloaded from www.Manualslib.com manuals search engine

3.6.1.2. Play compensation

To remove throttle cable follow the procedure described below:

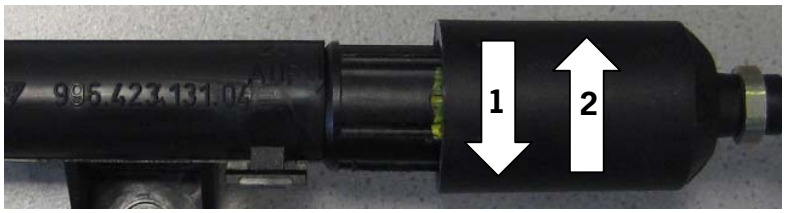

1. The throttle cable is tensioned automatically by the length compensation spring
2. To finish, rotate the connecting part in the direction “close” till the marking lugs on both parts of the connecting part are aligned

The throttle cable is tensioned automatically by the length compensation spring

3.6.2. Throttle butterfly potentiometer calibration

The throttle butterfly potentiometer must always be recalibrated if:

- **ECU was changed or reprogrammed**
- **Engine was changed**
- **Throttle butterfly potentiometer was changed**
- **Implausible throttle butterfly position values are displayed**

The following steps must be taken to calibrate the potentiometer:

1. Adjust the throttle cable so it is tension free (see 3.6.1.1)
2. Disconnect the throttle cable from the cam-disc
3. Loosen the idle adjustment screw 1.)
4. The cam-disc must now rest on the threaded bush 3.), the throttle butterfly is now completely closed. Calibration of the throttle butterfly is made in this position (reset the throttle butterfly angle to 0°)
5. This calibration is made via Bosch Modas a.) or the MoTeC Dash b.)

Downloaded from www.Manualslib.com manuals search engine

*a.) In Modas on the 'Throttle' page (in Engine F1) activate the button 'Set Throttle' → throttle angle **wdkba_w** shows 0°*

*b.) Switch to Warmup mode, press and hold the 'Display' and 'Alarm' buttons for approx. 3 seconds till the '**Reset**' appears in the display and **THR_BO** goes to 0°*

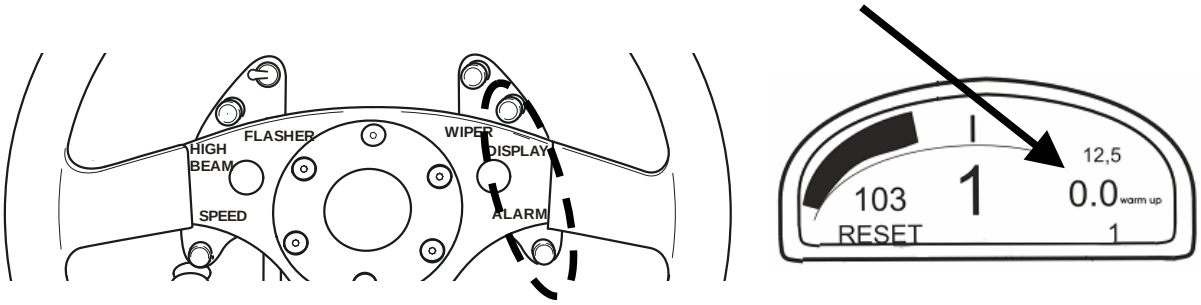

6. Screw the idle adjustment screw 1.) into the threaded bush 3.) till a throttle value of appr. 6.5° (**THR_BO** in Dash, **wdkba_w** in Modas) is displayed
7. The throttle value must NOT exceed 9° at idle (**THR_BO** in Dash, **wdkba_w** in Modas)
8. Lock adjustment screw 1.)
9. Reconnect throttle cable to cam-disc
10. Tension the throttle cable (see 3.6.1.23.6.1)

3.6.3. Full throttle adjustment

Adjust the throttle pedal stop-screw so that full throttle equals 80° +/- 2° (**THR_BO** in Dash, **wdkba_w** in Modas)

Attention: Only the adjustment screw under the throttle pedal should be used to set full throttle. It is essential at full throttle, i.e. when the throttle pedal is touching the stop, that there is sufficient play in the throttle cable on the engine and that the throttle cable movement is limited by the adjuster screw and NOT by the cable. If the full throttle value is too high it is possible that mechanical damage or a sticking throttle can occur.

Downloaded from www.Manualslib.com manuals search engine

3.7. Working on the engine

3.7.1. Connecting-rod bolt mounting instructions

1. Thoroughly clean the mating faces, bolt threads and the tapped bores
2. Smear the threads and bolt head mounting faces with engine oil
3. Initial tightening torque: 30 +/- 3 Nm
4. Final tightening torque: 62 +/- 2° torque angle
5. Resulting elongation: 0.200 +/- 0.015 mm

Attention: Always renew the connecting rod bolts after disassembly.
The joint surface must NOT be damaged.

As the connecting rods have a coated surface care must be taken that no visible damage occurs to the connecting rod surface when dismantling and assembling the engine. The connecting rods must NOT be polished.

Downloaded from www.Manualslib.com manuals search engine

3.7.2. Mounting the cylinder head

The following procedure should be adhered to when mounting the cylinder head:

1. Lightly oil the threads and mating faces
2. Tighten the bolts initially to 30 Nm in the following sequence, and then wait 15 minutes

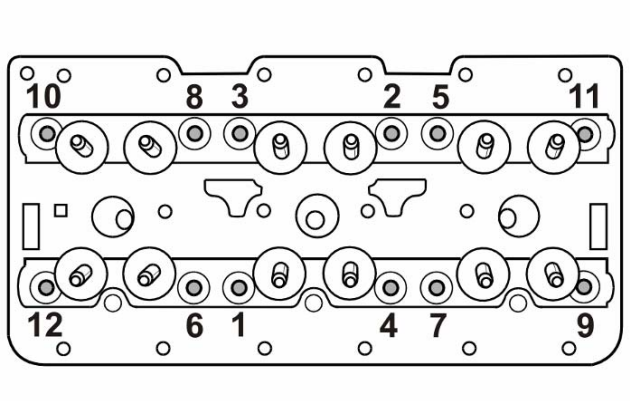

3. Completely loosen the bolts in the reverse sequence
4. Initially tighten the bolts to 20 Nm, before finally tightening to 120° torque angle

3.7.3. Flywheel tightening procedure

3.7.3.1. With used flywheel:

1. Loosen and remove the bolts
2. Replace with new bolts part number 930.102.206.00
3. Tighten the new bolts to 30 Nm (tighten sequence diagonally opposed)
4. Retighten bolts to 30 Nm and an additional 45° torque angle (tighten sequence diagonally opposed).

3.7.3.2. With new flywheel:

1. Because a new flywheel 'settles' it should be mounted initially using used bolts as described above.
2. Replace with new bolts part number 930.102.206.00
3. Tighten the new bolts to 30 Nm (tighten sequence diagonally opposed)
4. Retighten bolts to 30 Nm and an additional 45° torque angle (tighten sequence diagonally opposed).

Downloaded from www.Manualslib.com manuals search engine

3.7.4. Set valve timing

3.7.4.1. Valve timing

Point of max inlet valve lift (EM)	105° after TDC
Point of max exhaust valve lift (AM)	110° before TDC

3.7.4.2. Special tools

Porsche Motorsport recommends use of the following special tools to adjust and set the valve timing of the 911 GT3 Cup

Base plate cylinder 1:	996.721.549.90
Base plate cylinder 2:	996.721.550.90
Guide element EM/AM 110/110:	996.721.551.9A
Guide element EM/AM 105/115:	996.721.551.93
Degree wheel crankshaft:	996.450.131.00
Chain tensioner:	000.721.940.10
Setting jig TDC:	996.721.511.91
Retaining key timing chain sprocket:	996.721.513.90

Downloaded from www.Manualslib.com manuals search engine

3.7.5. Removing and fitting the crankshaft seal – pulley-side

3.7.5.1. Special tools

Porsche Motorsport recommends use of the following special tools to remove and fit the pulley-side crankshaft seal:

Retaining key pulley:	000.721.973.20
Adapter retaining key pulley:	000.721.973.21
Press tool crankshaft seal:	000.721.216.40
Spacer for press tool:	000.721.979.71
Protective cap crankshaft:	000.721.979.70

3.7.5.2. Removal

1. Remove the pulley from the crankshaft using the special tool 000.721.973.20 with the retaining key extension 000.721.873.20
2. Check the locating dowel on the pulley for damage and replace if necessary
3. Centre-punch the steel ring in two points offset from one another by 180°

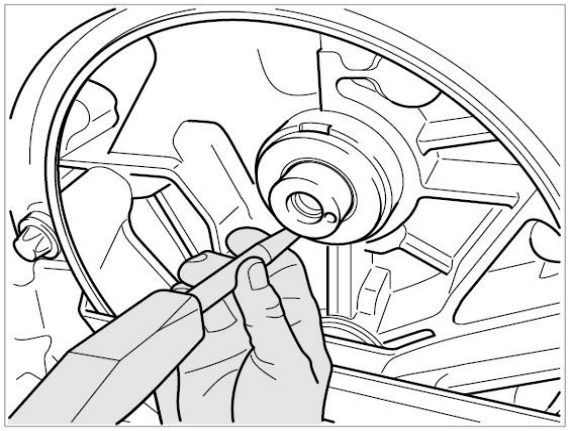

Downloaded from www.Manualslib.com manuals search engine

4. Drill two holes (Ø 2 mm) at the centre punched points

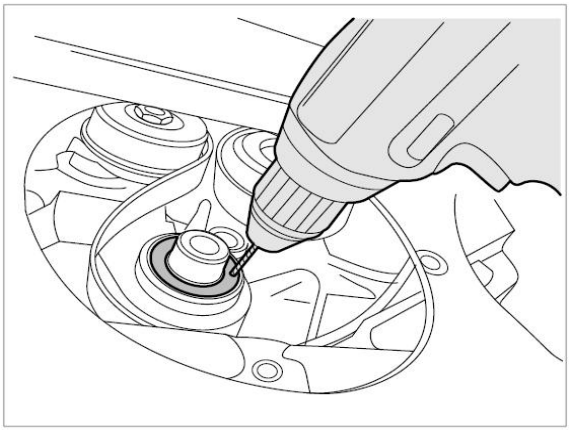

5. Screw the threaded-end of a commercially available slide hammer -1- into the drilled holes. Carefully remove the seal -2- by swapping the slide hammer alternatively between the drilled holes

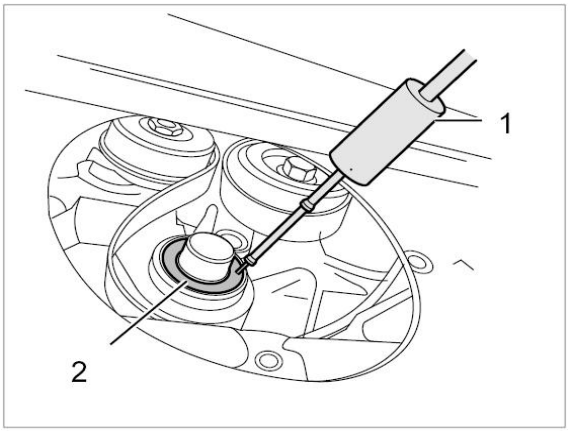

6. Make a drill jig according to the following sketch (paper our thick card). All dimensions in millimetre

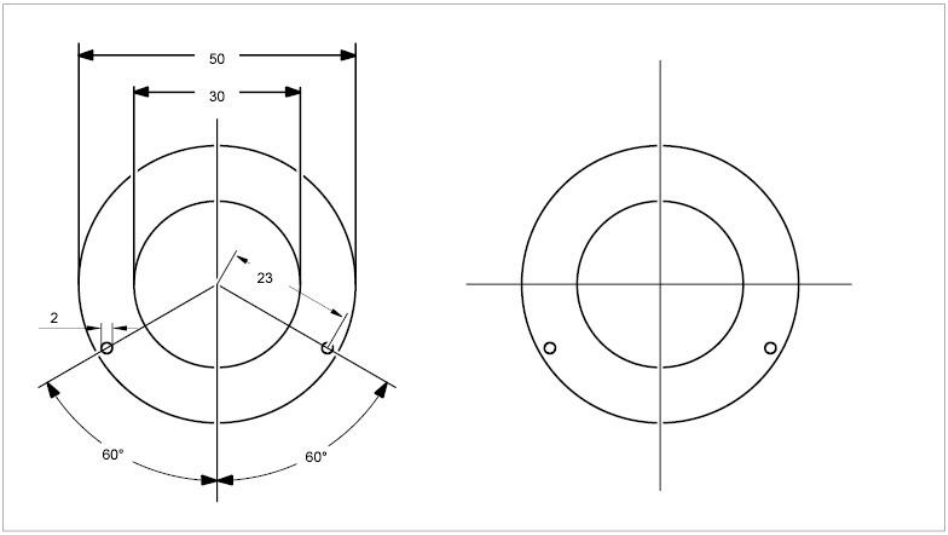

Downloaded from www.Manualslib.com manuals search engine

7. Slide the drill jig up to the seal on the crankshaft flange and position correctly
8. Coat the drill bit (Ø 2 mm) with extremely viscous grease
9. Drill at the specified points
10. Screw the pointed end of a commercially available slide hammer alternatively into the two holes and pull-out the seal.
11. Remove swarf
12. Thoroughly clean the flange with a cleaning solvent or acetone

3.7.5.3. Installation

1. Fit the press tool 000.721.216.40 with spacer 000.721.979.71

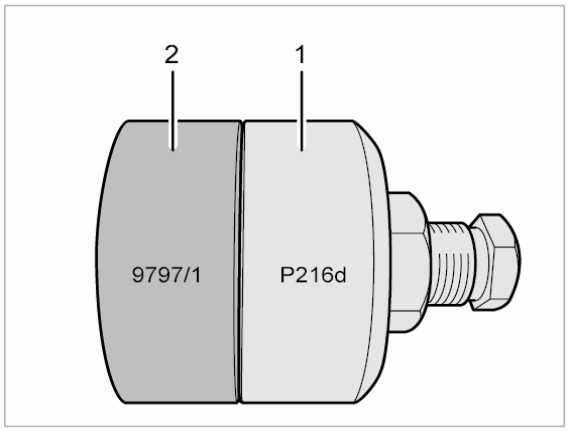

2. Always fit the crankshaft seal dry, DO NOT use grease
3. Push the protective cap 000.721.979.70 onto the crankshaft

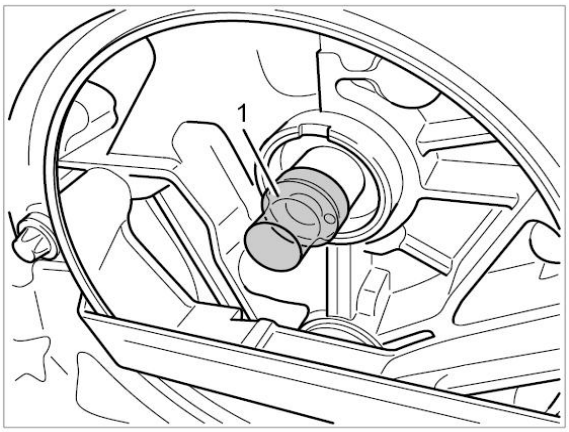

Downloaded from www.Manualslib.com manuals search engine

4. Push the new crankshaft seal -1- onto the crankshaft flange (mounting position: steel disc to pulley)

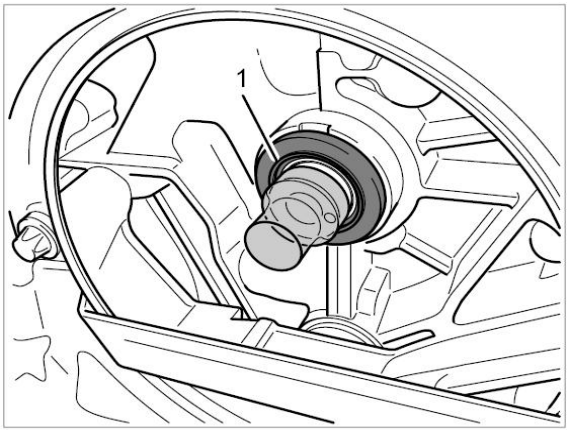

5. Push the press tool (see 1) onto the crankshaft flange and fit the hexagon-head bolt -3- (17 mm AF)

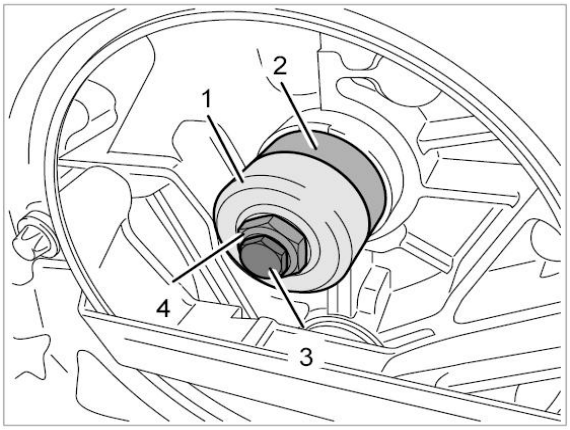

6. Tighten the hexagon-head nut -4- till the spacer -2- touches the crankshaft flange

7. Leave the tool fitted for approximately two minutes so that the seal seats correctly

8. Loosen the hexagon-head bolt -4-, remove the hexagon-head bolt and tool

9. Remove the protective cap

Downloaded from www.Manualslib.com manuals search engine

3.7.6. Removing and fitting the crankshaft seal – crankshaft side

3.7.6.1. Special tools

Porsche Motorsport recommends use of the following special tools to remove and fit the flywheel side crankshaft seal:

Pressure pad:	000.721.912.60
Seal extractor jig:	000.721.971.90

3.7.6.2. Removal

1. Drill two holes (Ø 2,5 mm), 180° opposed from one another, into the metal ring of the crankshaft seal. Never lever out the seal!

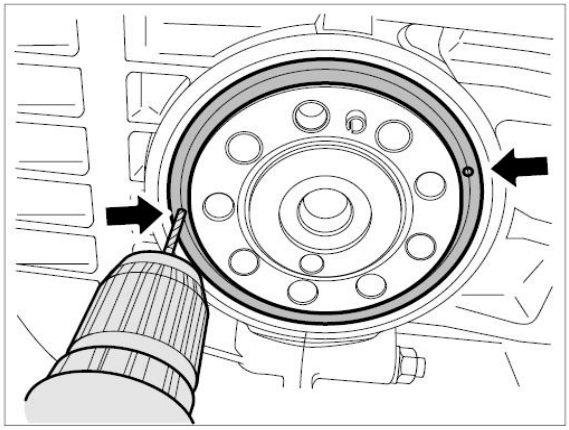

2. Screw the threaded end of a commercially available slide-hammer alternatively into the holes and extract the metal ring evenly.

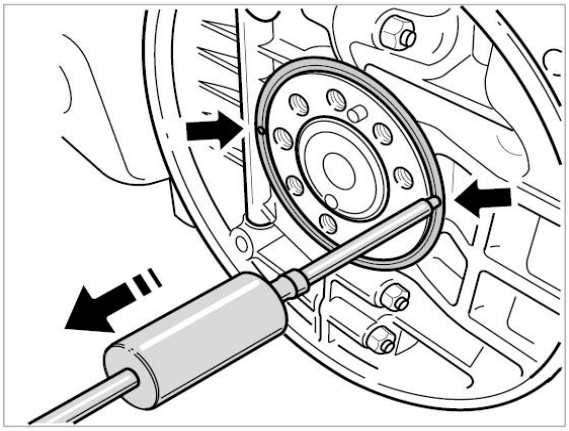

Downloaded from www.Manualslib.com manuals search engine

3. After extracting the metal ring the actual seal remains in the crankcase. Under no circumstances whatsoever must this be levered out.

4. Carefully remove the drill swarf

5. Carefully drill two further 2.0 mm holes (arrows) as close as possible to the corners (metal body) of the seal.

6. A thrust ring is fitted behind the crankshaft seal which should prevent the possibility of the seal being fitted inclined. Aluminium swarf which may appear during drilling should be carefully removed.

7. Remove the seal, there are two procedures for this

a.) Screw the threaded end of the slide hammer alternatively into the bores and extract the seal evenly.

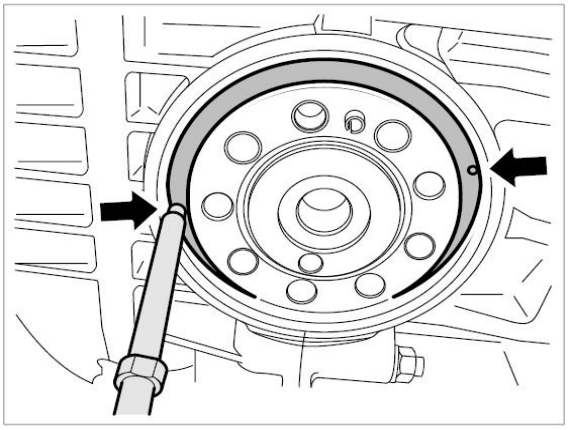

b.) Screw in two self-tapping screws and extract evenly with the claw fitting of a slide hammer

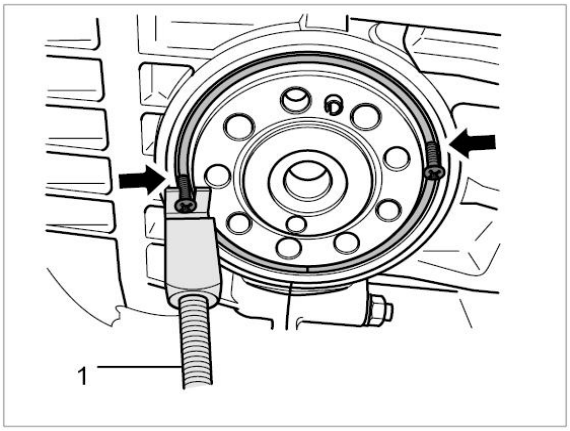

Downloaded from www.Manualslib.com manuals search engine

8. Carefully remove the swarf and oil residue from the crankshaft bore

3.7.6.3. Fitting

If visible carefully remove small edges or burrs from the crankshaft flange chamfer with an oil stone, afterwards carefully clean the crankshaft journal and the crankcase bore (use cleaning solvent or acetone with a clean, lint-free cloth).

The crankshaft flange sealing face must not, under any circumstances, be treated with emery cloth, polish compounds or wire brushes. Remove corrosion on the crankshaft flange with a special metal polish wad. Afterwards carefully clean the crankshaft flange with acetone or cleaning solvent.

Downloaded from www.Manualslib.com manuals search engine

1. Fasten the insertion-jig base plate 000.721.971.90 hand tight and evenly to the crankshaft flange using the hexagon-head bolt

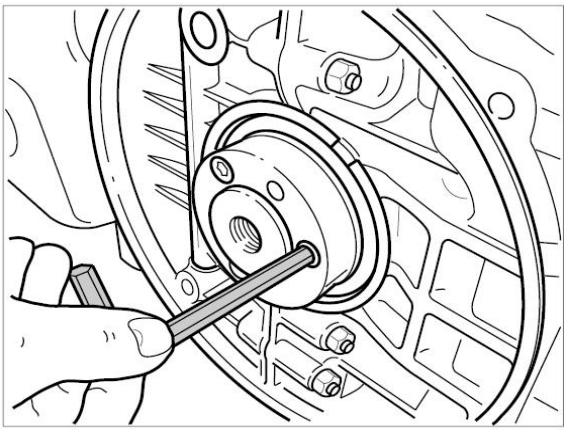

The crankshaft seal should always be fitted dry

Do not touch the micro sealing lip

The steel ring must face towards the technician during assembly

2. Fit the insertion-jig magnetic cone to the base plate, fit the crankshaft seal to the cone and carefully push it onto the base plate
3. Fit the seal dry

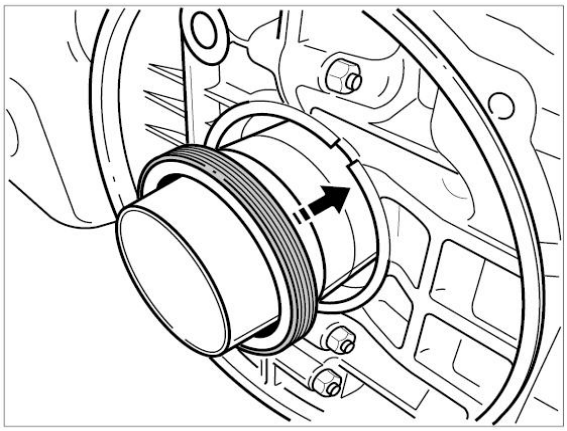

Downloaded from www.Manualslib.com manuals search engine

4. Remove the magnetic cone and using the pressure piece 000.721.912.60 push the crankshaft seal in a coplanar position.

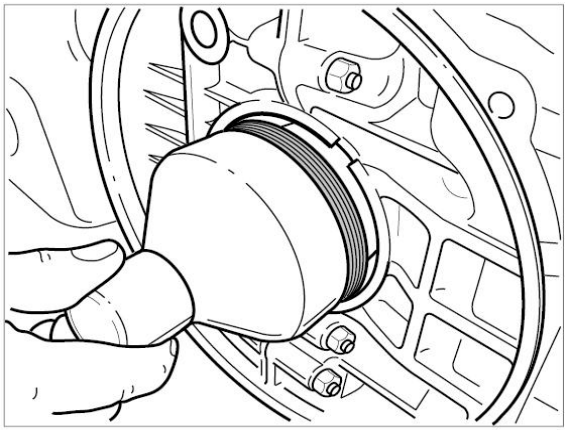

5. Fasten the insertion jig mounting dome 000.721.971.90 to the base plate, for this purpose tighten the mounting dome hexagon-head bolt by hand

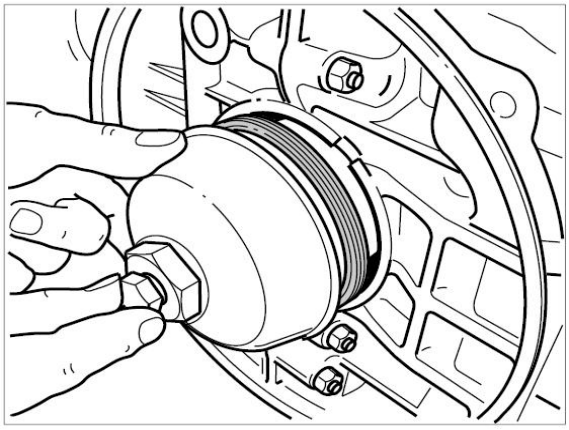

Downloaded from www.Manualslib.com manuals search engine

6. Push the crankshaft seal onto the crankshaft flange by rotating the insertion nut clockwise till the mounting dome butts completely on the crankshaft flange mounting surface.

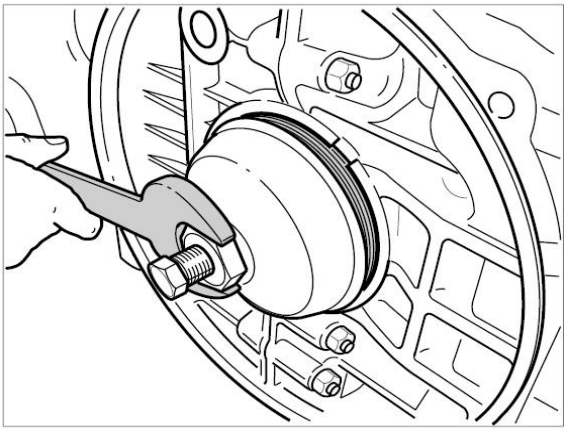

7. Leave the assembly tools for one or two minutes in the final position, the seal and sealing lip position themselves as a result.
8. Loosen the inserting nut and remove the hexagon-head bolt of the inserting jig, remove the jig and unscrew the base plate
9. Check the fitted position of the seal, for this purpose measure the distance at four points from the crankshaft flange to the level surface of the steel ring (arrow).

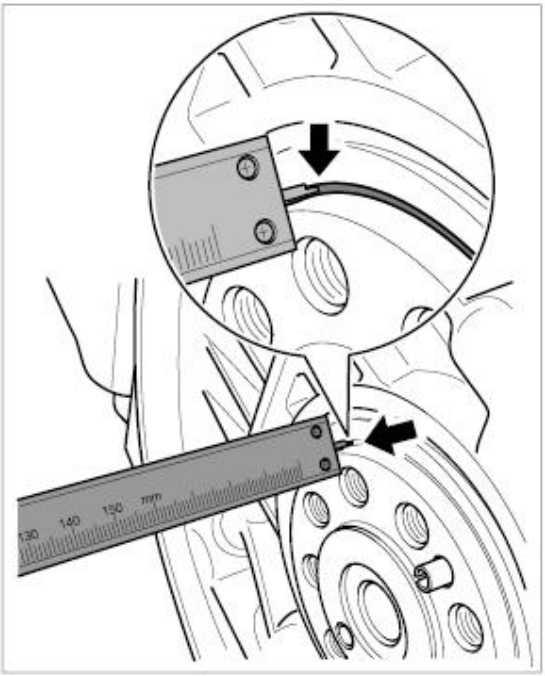

Downloaded from www.Manualslib.com manuals search engine

Measurement depth is approximately 5 mm

Maximum permissible misalignment is 0.5 mm

10. If the comparable values exceed the maximum difference use the insertion jig again to press home

3.8. Engine component tightening torques

Component	**Bolt dimensions**	**Tightening torque** [Nm]
Crankshaft and crankcase		
Connecting rod	M10 x 1.25	see 3.7.1
Oil pump	M8	23
Bolt / nut crankcase	M8	23
V-belt pulley to crankshaft	M14 x 1.5	170
Plug screw for pressure release valve	M18 x 1.5	40
Oil drain bolt, crankcase	M20 x 1.5	50
Water drain bolt, cylinders 1-3	M10 x 1	10
Water drain bolt, cylinders 4-6	M16 x 1.5	10
Flywheel	M10	see 3.7.3
Cylinder head		
Cylinder head bolt	M10	see 3.7.2
Camshaft housing		
Camshaft housing on cylinder head	M8	Initial torque: 23 Final torque: 28
Anti-knock sensor	M8	23
Spark plugs	M12 x 1.25	20
Spark plugs should only be tightened a maximum of five times		
Camshaft wheel on camshaft	M12 x 1.5	30 + 90°
Timing chain case to crankcase	M8	23
Valve cover to camshaft housing	M6	9.7
Timing chain-case cover	M6	13
Ancillary components		
Alternator-belt pulley on alternator		55
Lambda sensor	M18 x 1.5	50
Clutch to flywheel	M8 x 45	33
Oil drain plug on oil tank	M20 x 1.5	60

Downloaded from www.Manualslib.com manuals search engine

3.9. Engine mileage

The engine in the 2012 911 GT3 Cup is designed to rev to a maximum of 8,500 rpm, in this case the rebuild interval is **50 hours**. The rebuild interval changes as follows if this maximum rev limit is exceeded:

Engine rpm	Duration	Rebuild
1.) < 8,500 rpm	-	after 50 hours
2.) 9,000 – 9,500 rpm	Over 6 seconds	Immediate check on dynamometer
3.) > 9,500 rpm	Over 2 seconds	Immediate rebuild
4.) > 10,000 rpm	When exceeded for first time	Immediate rebuild

If criteria 3.) and 4.) are met the minimum amount of parts required for a rebuild are as follows:

- replace all connecting rod bearings
- replace damaged connecting rods
- replace all connecting rod bolts
- replace main bearings
- replace all pistons, cylinders and water jackets
- leak-test on cylinder-heads
- replace both timing chains
- replace both timing chain tensioners
- replace all cam followers
- replace all valve springs

Downloaded from www.Manualslib.com manuals search engine

4. Fuel and exhaust system

4.1. Fuel system

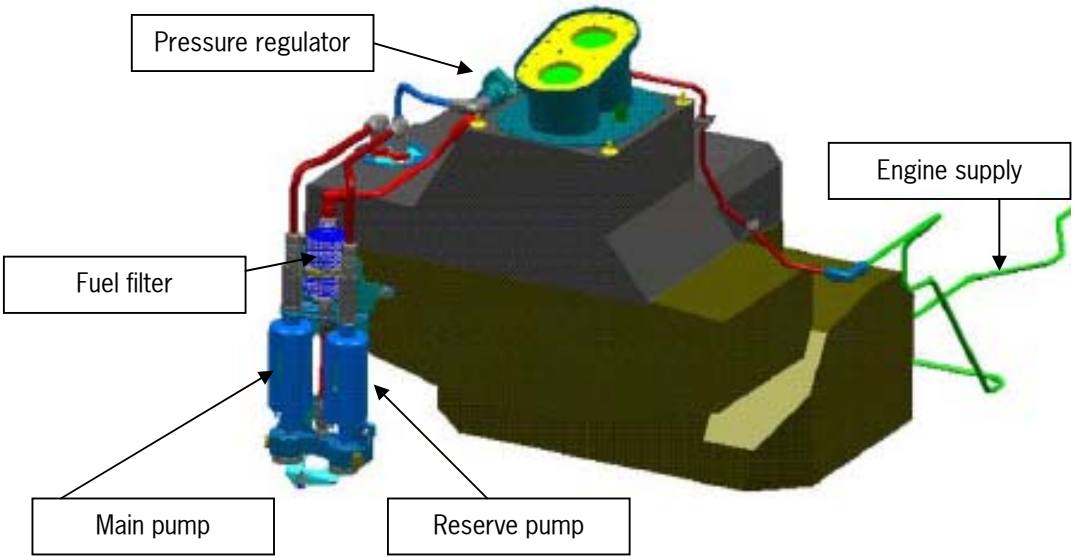

- No return fuel system
- FT3 safety fuel cell
- Fuel cell volume: 100 l
- Integrated 6.5 l catch tank
- 4 intank pumps
- Vane type main and reserve pump

Downloaded from www.Manualslib.com manuals search engine

4.2. Fuel cell

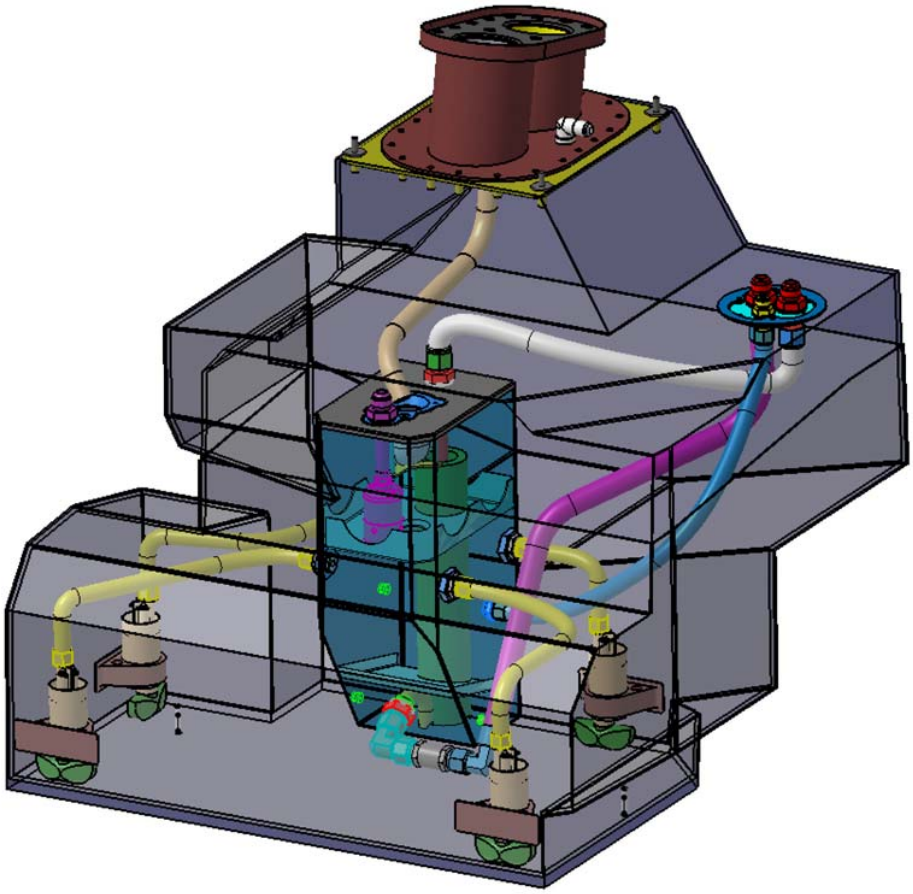

Attention: The fuel tank volume must be measured and adjusted before the first competition to ensure that the capacity does not exceed that stated by the relevant regulations.

Both the main and reserve fuel pumps are of the electrical vane type.

The fuel filter is located in the front luggage compartment and should be replaced after approximately every 24 hours of use. A scavenge filter element is mounted before the pump which should be cleaned after every race. The fuel system can be drained from the quick release coupling mounted on the left hand side of the engine bay.

Downloaded from www.Manualslib.com manuals search engine

Attention: The fuel pumps should not be activated under any circumstances if tank-engine quick release couplings are disconnected. Fuel pressure peaks in the system can cause leakage, and in the worst case the system pressure can exceed the burst pressure of the fuel filter.

4.2.1. Pressure regulator

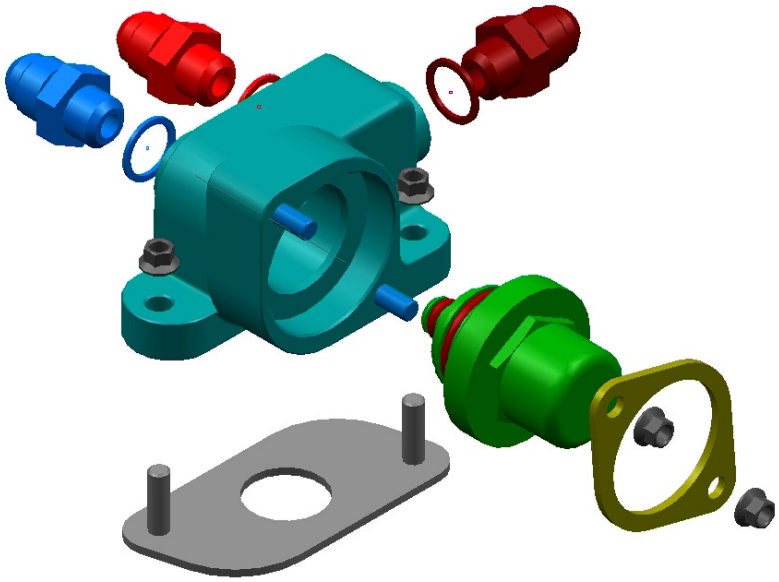

The 911 GT3 Cup is equipped with a returnless fuel system. Due to this design fluctuation in fuel pressure is possible. The average fuel pressure over one complete lap should not be lower than

4.8 bar

Downloaded from www.Manualslib.com manuals search engine

4.2.2. Reserve pumps

A reserve fuel pump is fitted as standard and is activated from a switch mounted on the dashboard. A warning lamp in the push button is illuminated when the reserve pump is running.

4.2.3. Main and in-tank pumps

A switch mounted on the dashboard can be used to switch between the various main and in-tank pump modes:

- Service: Normal operation
- Middle position: Fuel pumps off
- In-tank service: Only the in-tank pumps are in operation

Downloaded from www.Manualslib.com manuals search engine

4.3. Exhaust system

4.3.1. Standard system

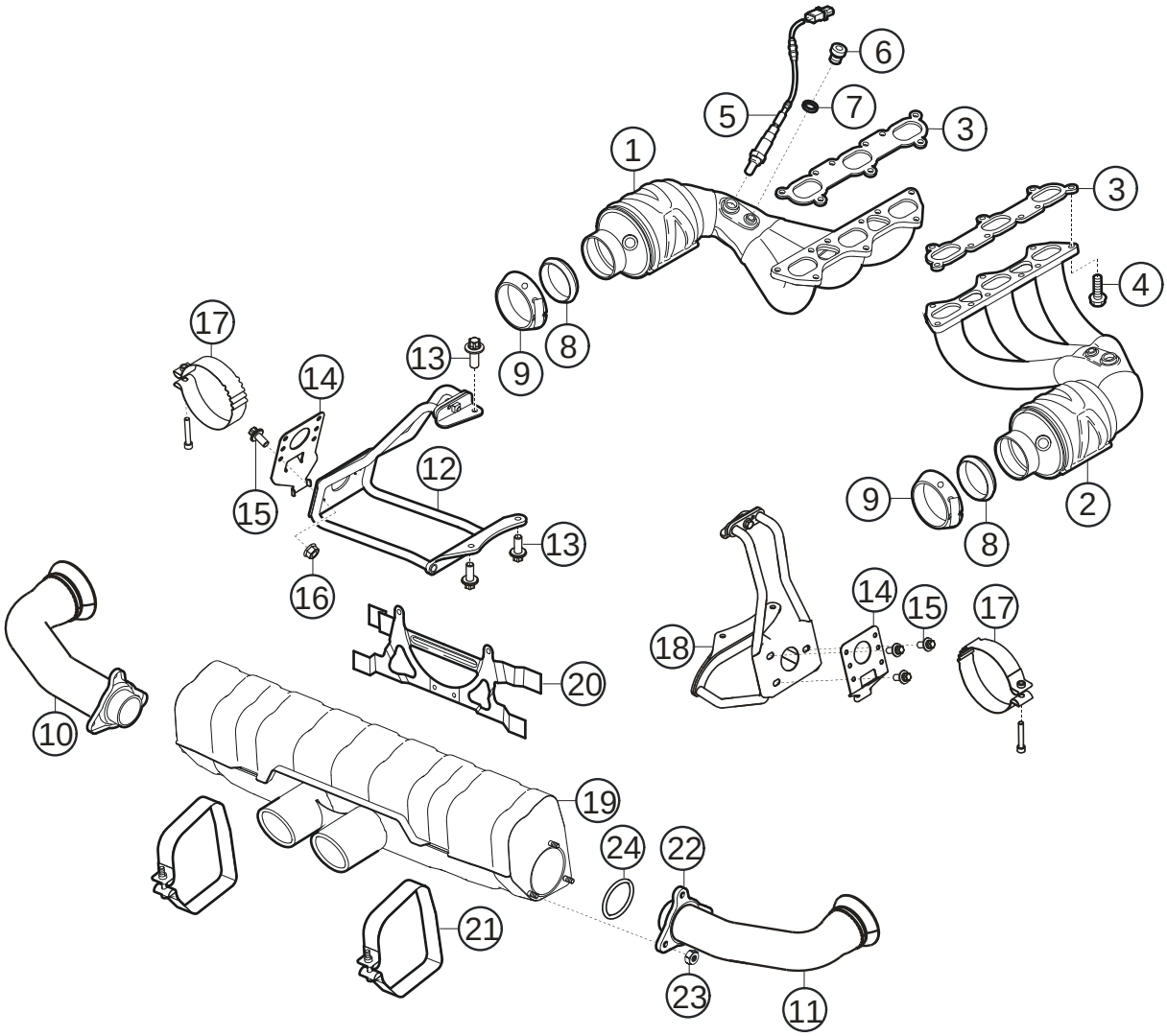

Downloaded from www.Manualslib.com manuals search engine

4.3.2. Supercup system

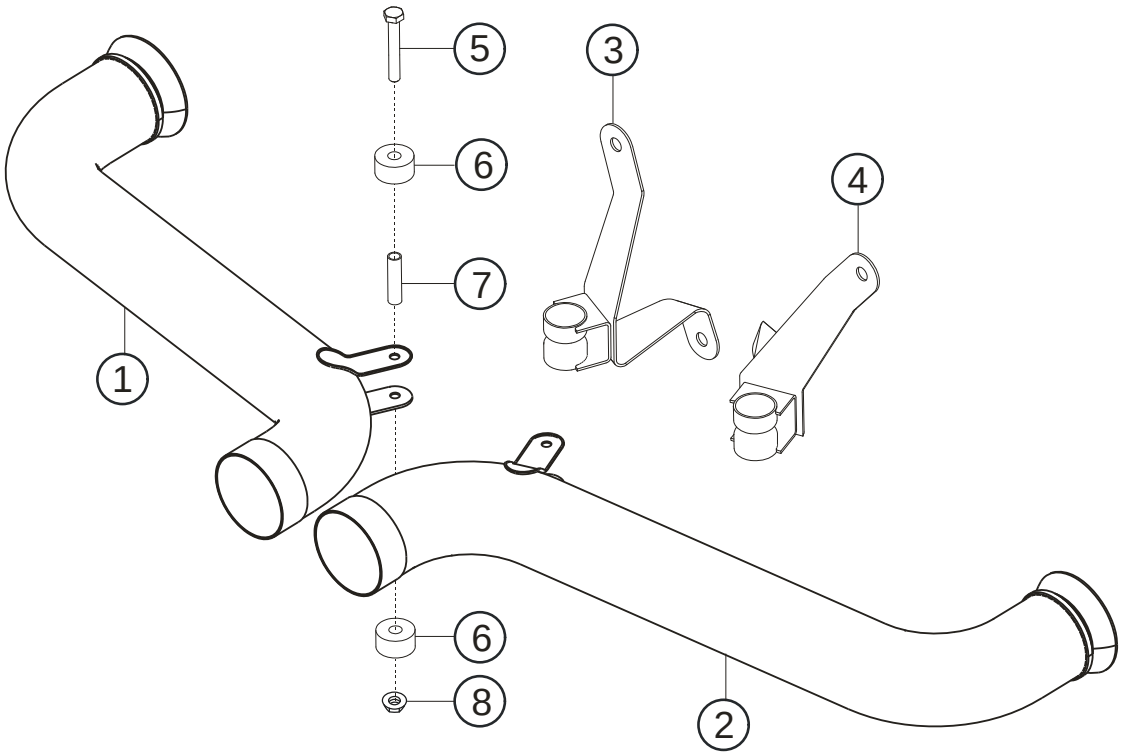

Downloaded from www.Manualslib.com manuals search engine

4.3.3. Noise optimised system

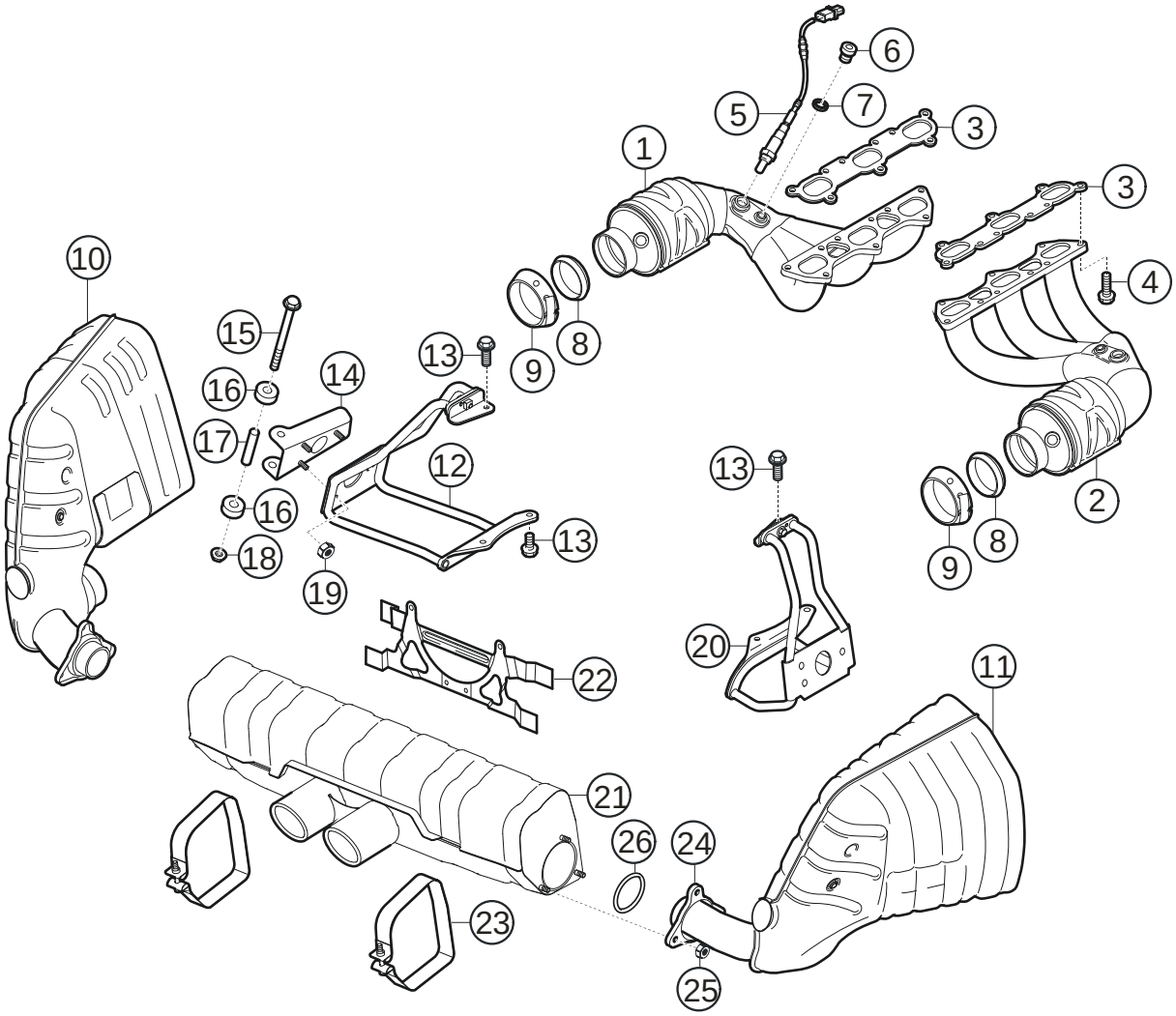

Downloaded from www.Manualslib.com manuals search engine

4.3.4. Tightening torque exhaust manifold

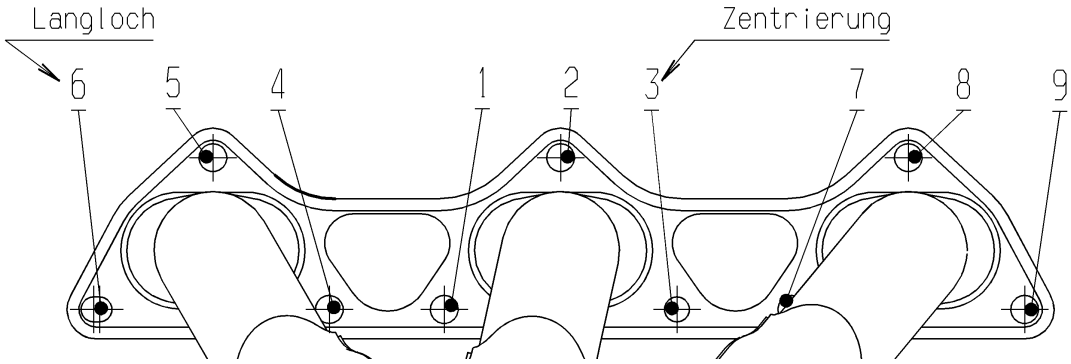

Initial torque: **25 Nm** (after tightening sequence of complete bolt assembly)

Final torque: **33 Nm** (after tightening sequence of complete bolt assembly)

4.3.5. Catalytic converter

100 cells

Downloaded from www.Manualslib.com manuals search engine

5. Gearbox

The six-speed sequential gearbox fitted to the 911 GT3 Cup is equipped with a limited slip differential, oil filter and a water / oil heat-exchanger for cooling purposes.

5.1. Technical data gearbox

Gearbox type		G 97/63
Design		Sequential
Number of gears		6
Standard delivery ratio set*		
Crown wheel & pinion	8/32	4.000
1st gear	12/38	3.167
2nd gear	15/32	2.133
3rd gear	18/31	1.722
4th gear	20/28	1.400
5th gear	23/26	1.130
6th gear	29/27	0.931
Lubrication		Gearbox mounted oil pump Oil – water heat-exchanger
Lubricant		Mobil 'Mobilube' SHC
Oil capacity when new		3.6 l
Oil to refill after ratio change		3.0 l
Limited slip differential		
Locking value, drive		37 % (dynamic)
Locking value, overrun		52 % (dynamic)

Downloaded from www.Manualslib.com manuals search engine

5.2. Gearbox layout

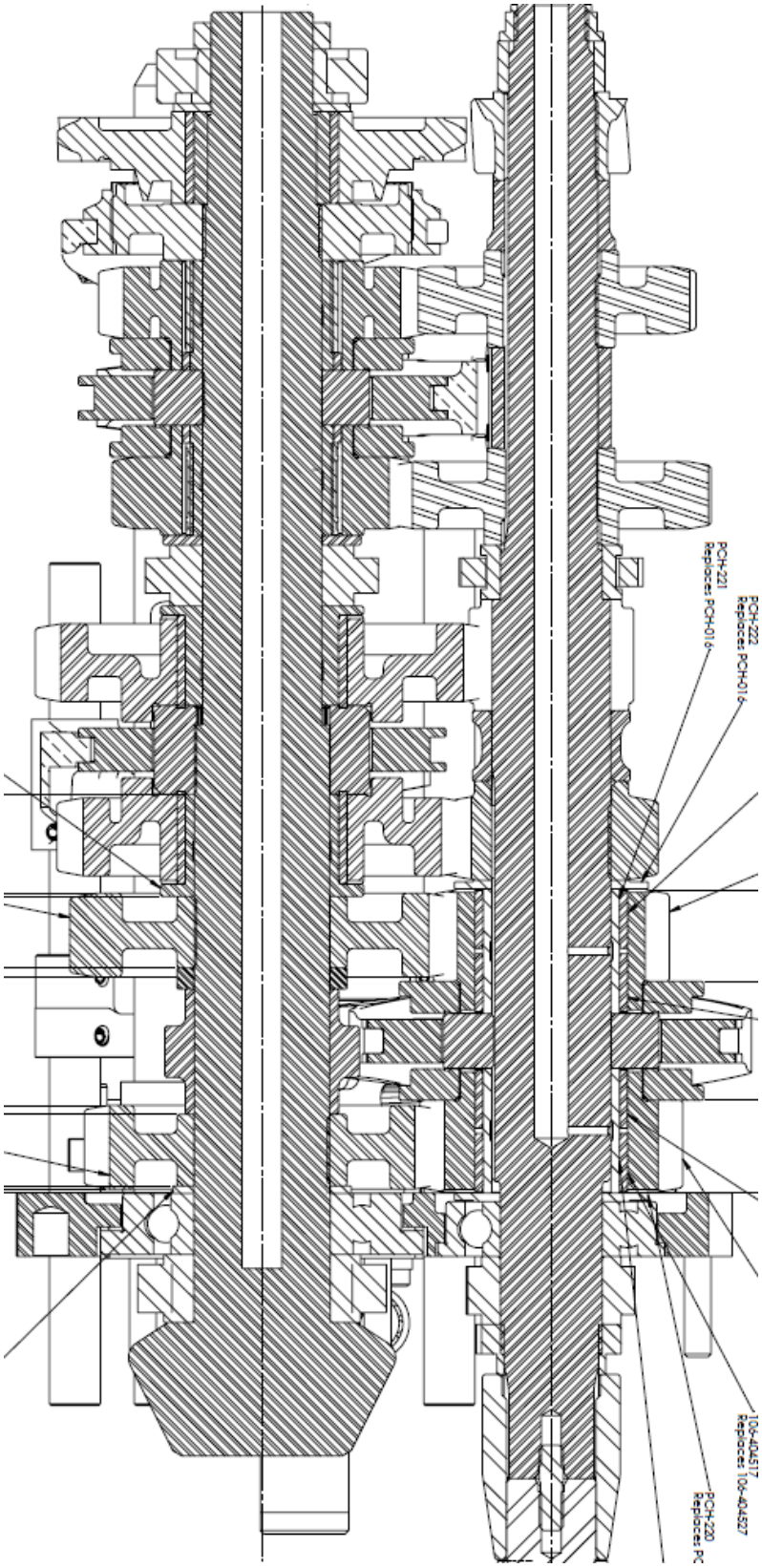

Downloaded from www.Manualslib.com manuals search engine

5.3. Modifications 2012 model

The gearbox of the 2012 model shows the following modifications in comparsion to the 2011 specs::

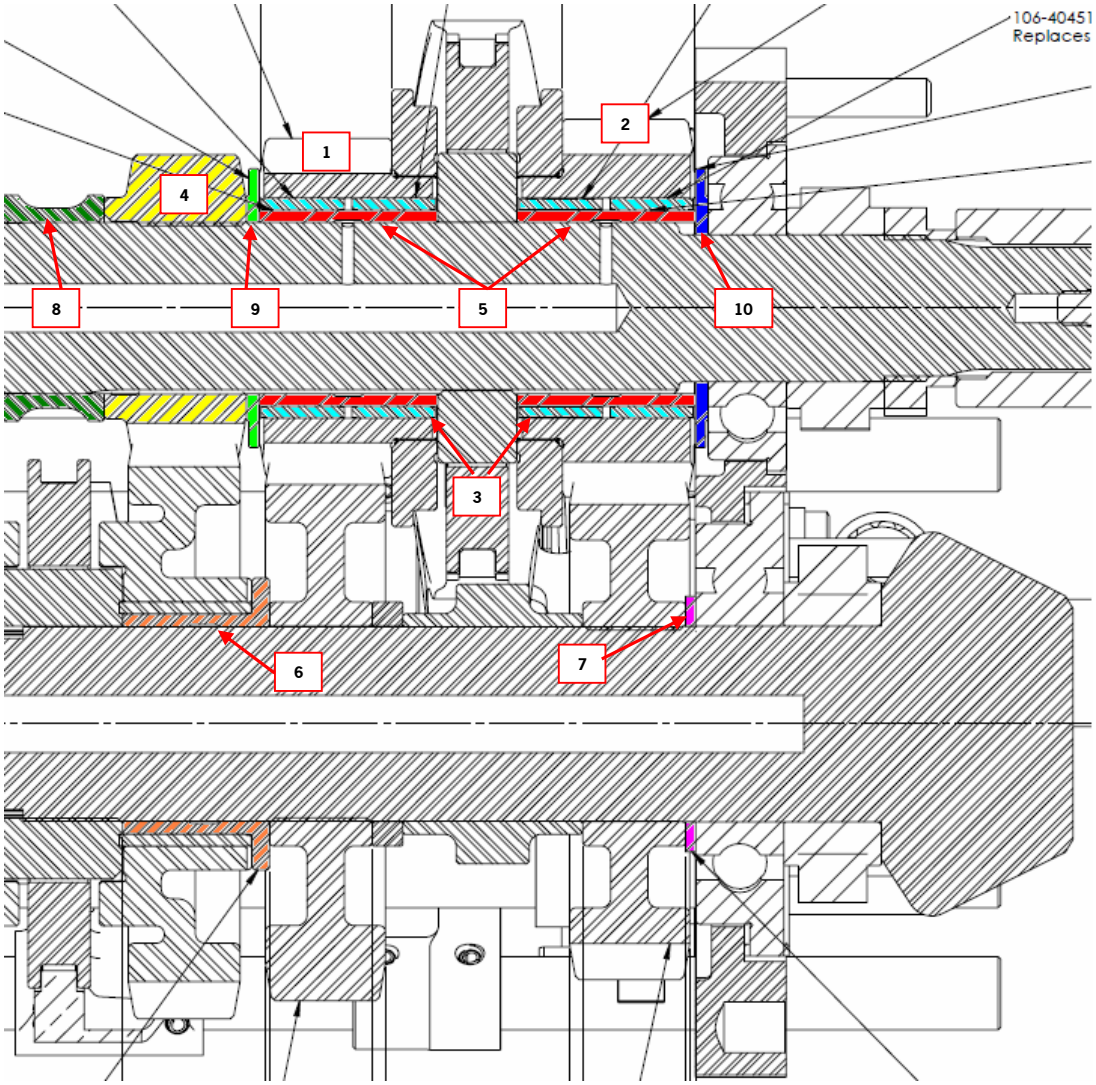

1. Wider 3rd gear
2. Wider 4th gear
3. Wider needle bearings 3. / 4. gear
4. Fixed gear 2 turned
5. Idler gear sleeves 3rd / 4th gear
6. Idler gear sleeve 2nd gear 1mm wider
7. 1 mm wider washer H3
8. Spacer 1st / 2nd gear
9. Disc 3rd gear
10. Disc 4th gear

Downloaded from www.Manualslib.com manuals search engine

5.4. Gearbox lubrication

The gearbox is equipped with a heat-exchanger for oil cooling purposes.

5.4.1. Gearbox oil

Mobil Mobilube 1 SHC

5.4.1.1. Filling capacity

New/complete rebuild:	3.6 litres
Ratio change:	3,0 litres

5.5. Ratio chart

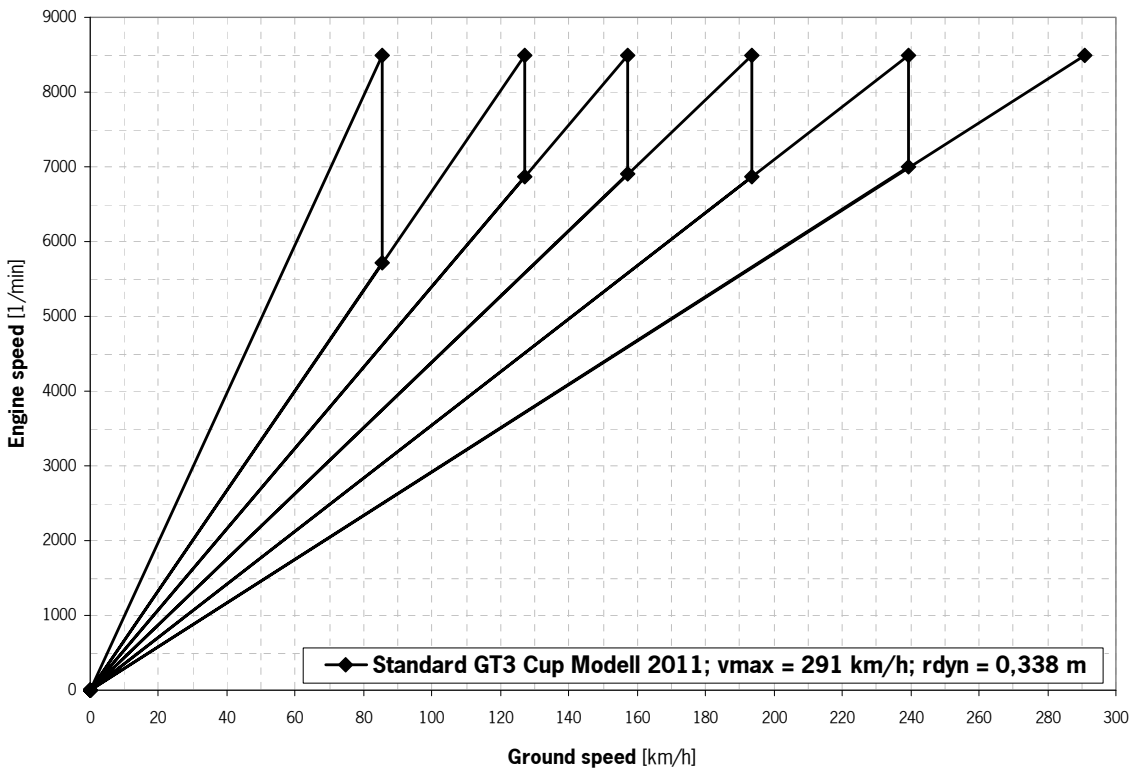

Downloaded from www.Manualslib.com manuals search engine

5.6. Gear recognition

To determine electronically the gear selected a potentiometer, in which a defined current drops subject to the gear selected, is mounted to the gearbox. The gear recognition is required for the power interruption when shifting gear..

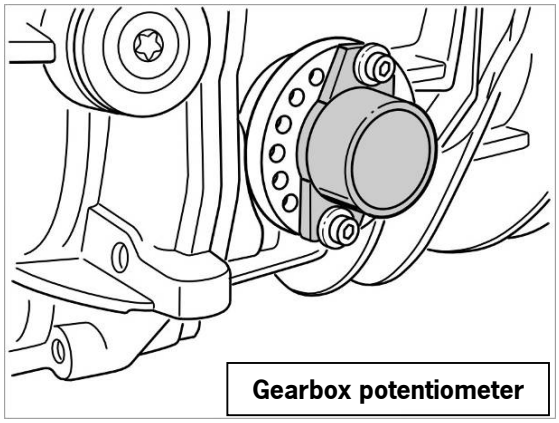

5.6.1. Gearbox potentiometer calibration

The gear position sensor must be recalibrated after repairs are carried out on the gearbox or if the gear ratios are changed..

- Turn on the ignition and switch to **GEARSEN** in the "Warm up Modus" in the MoTeC display
- Select **3rd** gear. Turn the wheels to ensure that 3rd gear is also correctly engaged
- The value in the display must be **2.64 V**, the display must show **3rd** gear, for this purpose change to either 'Race' or 'Practice Modus' (no gear display in 'Warm-up Modus')
- In addition the voltage for the other gears should be checked (see 10.7.1)

5.6.2. Gearbox potentiometer adaption

The 911 GT3 Cup 2012 gear recognition is equipped with adaption which constantly compares and when necessary corrects the gearbox potentiometer with the calibrated value.

This adaption only functions within specific limits, therefore it is absolutely necessary that the manual calibration in 3rd gear is carried out meticulously.

Downloaded from www.Manualslib.com manuals search engine

5.7. Changing gear

A gear lever force sensor is integrated in the gear knob, which activates an ignition cut, and therefore a cut in propulsion, when pulled or pushed. This allows full power up shifts to be made.

Attention: It is absolutely necessary to change gear as quickly as possible. Shifting gear too slowly can cause an increase in wear or damage to the dog-ring teeth.

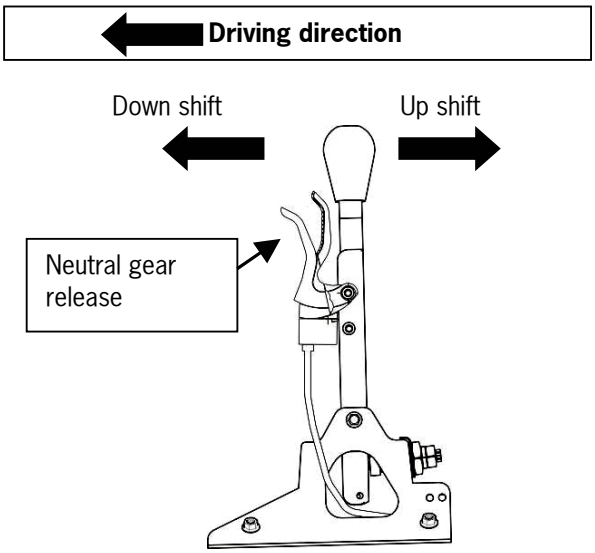

Porsche Motorsport recommends that the following points are strictly adhered to prevent gearbox damage:

- Change gear as quickly as possible
- Only touch the gear knob when changing gear
- Always blip the throttle and use the clutch synchronised when down shifting (approximately 50° wdkba_w)

Downloaded from www.Manualslib.com manuals search engine

5.7.1. Example gear shift procedure

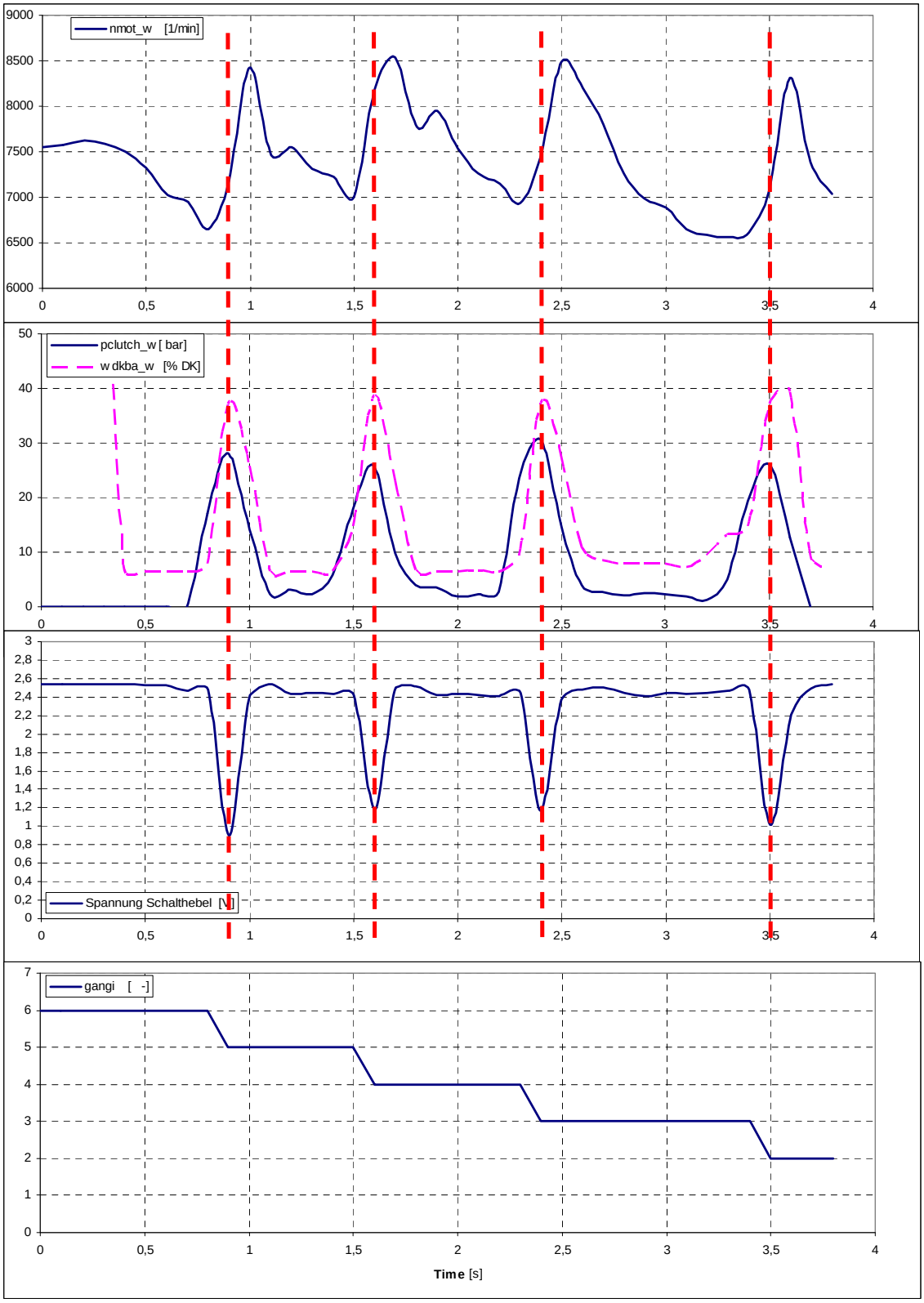

The above images show an example of a gear shift sequence from 6th to 2nd gear.

Downloaded from www.Manualslib.com manuals search engine

5.8. Differential

The limited-slip differential has a locking torque of 37 % / 52 % (power / overrun) (dynamic locking value)..

The differential is checked by means of a friction test in which the preload and wear of the clutch disc plates are determined.

5.8.1. Differential layout

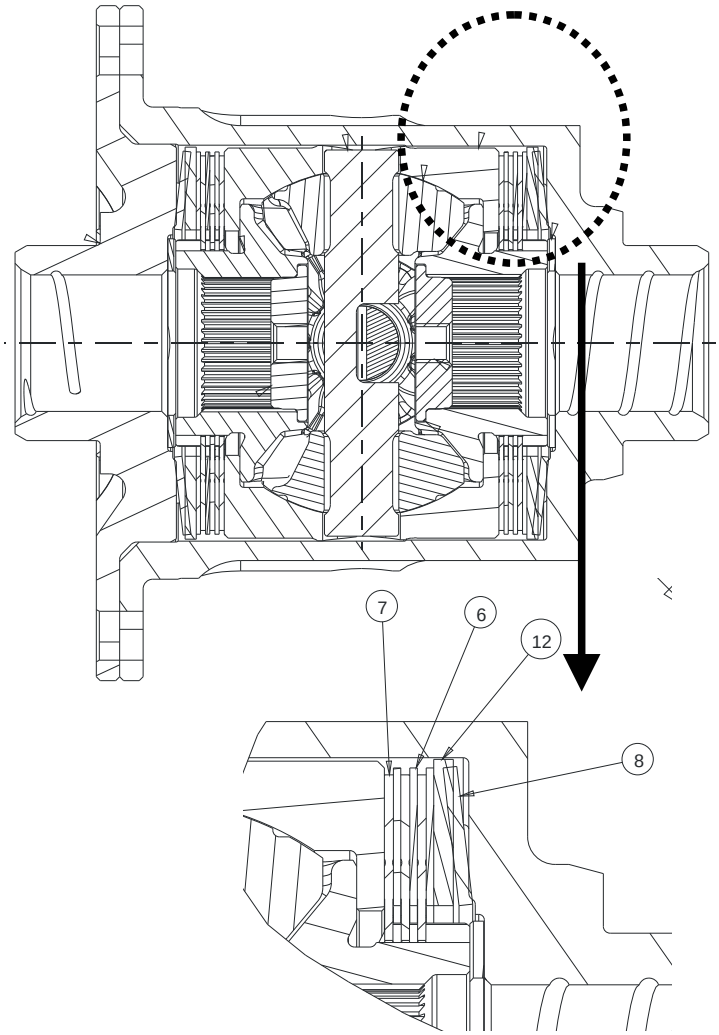

6 – Clutch plates	3 per side
7 – Friction plates	3 per side
8 – Belleville washer	1 per side
12 – Spacer	1 per side

Downloaded from www.Manualslib.com manuals search engine

5.8.2. Basic differential locking torque

When making repairs always renew the complete disk pack. The replacement of individual disks is not permitted.

When reassembling smear all faces of the disks, pressure plates and axles lightly with gearbox oil.

To check the basic locking torque, a flange with two bolts should be mounted in a vice. The second flange with the connection piece (996.450.322.90) should be fitted to the differential and rotated slowly using a torque wrench.

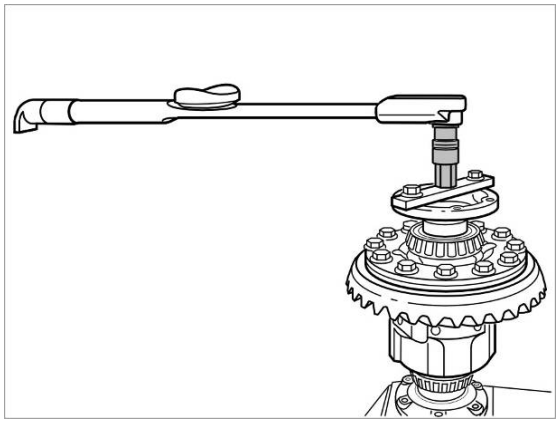

A basic torque of between **90 Nm - 135 Nm** should be achieved.

Wear limit **< 60 Nm**

5.9. Clutch

The 911 GT3 Cup is equipped with a 5½“ three-plate sinter metal clutch.

Attention: The clutch is specially designed for motorsport use. To prevent excessive wear or overheating, the clutch should not be slipped when driving (manoeuvring or during unloading and loading).

Downloaded from www.Manualslib.com manuals search engine

5.9.1. Clutch mounting instructions

- With multi-plate clutches it should be noted that the star shape of the sinter discs align with one another
- A thin film of grease should be smeared on the splines and the clutch plates slid up-and-down the input shaft till the hub slides easily on the shaft. Remove excess grease
- The clutch surfaces must remain free of grease and oil.

Porsche Motorsport offers a centering shaft to assist assembly (part number 996.450.335.90).

5.9.2. Clutch wear

New sinter material	2.6 mm
Replace at	2.2 mm

The disk spring clamping force remains constant to this dimension, but then reduces.

5.9.3. Clutch fluid

Endless RF - 650 Racing Super Fluid part number 996.355.960.90

Downloaded from www.Manualslib.com manuals search engine

5.9.4. Clutch layout

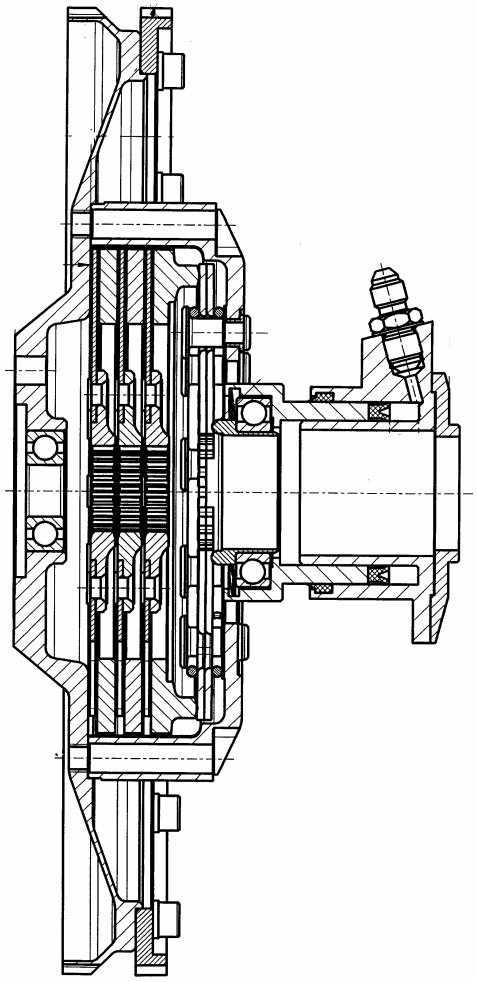

5.9.5. Release bearing

When handling the clutch release bearing-seal care must be taken that absolutely no oil comes into contact with the seal, otherwise it can swell which, in the worst case, could lead to a loss of function.

It should also be noted that when handling the seal the hands and working area should clean and free of oil residue (this also applies for engine and other oils).

According to the manufacturer the seal is only compatible with DOT4 and DOT5 hydraulic fluids.

Downloaded from www.Manualslib.com manuals search engine

5.10. Working on the gearbox

The dismantling, assembly and maintenance of the gearbox is described in this section. This gives you the possibility to replace damaged or worn parts. In the event of more comprehensive damage, which necessitates the replacement of gearbox housings, we strongly recommend that this is undertaken by Porsche Motorsport. Complex measurement and adjustment, which could not be included in these instructions, are necessary to guarantee that the gearbox works perfectly.

5.10.1. Gearbox special tools

Stop plate ring and pinion gear	996.450.320.90
Angle bracket for stop plate	996.450.325.90
Angle bracket for stop plate	996.450.326.90
Plate locking torque measurement	996.450.322.90
Arbour press	996.450.323.90
Arbour press	996.450.324.90
Spacer bolt	996.450.329.90
Centring bolt clutch	996.450.335.90
Spacer ring	996.450.332.90
Locking tool input shaft	000.721.928.20
Arrester for shift rod	996.450.315.9A
Shift knob	996.450.313.9A
Auxiliary tool reverse gear	996.450.311.9A
Auxiliary tool gear housing	996.450.310.9A
Locking tool input shaft	000.721.925.30

Downloaded from www.Manualslib.com manuals search engine

5.10.2. Dismantling the gearbox

1. Clamp the input shaft using the special tool

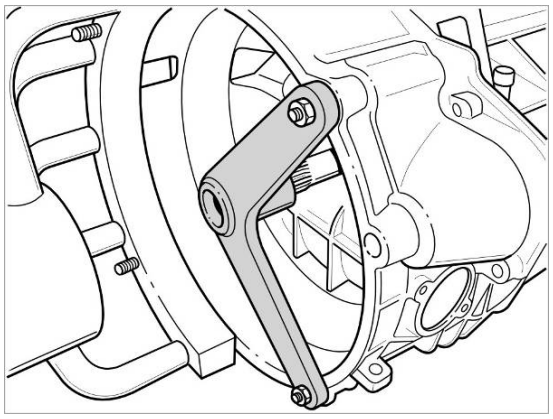

2. Remove the gearbox cover nuts and then slide off the cover. Remove the oil pipe retaining screw before extracting the oil pipe. Engage 1st gear.

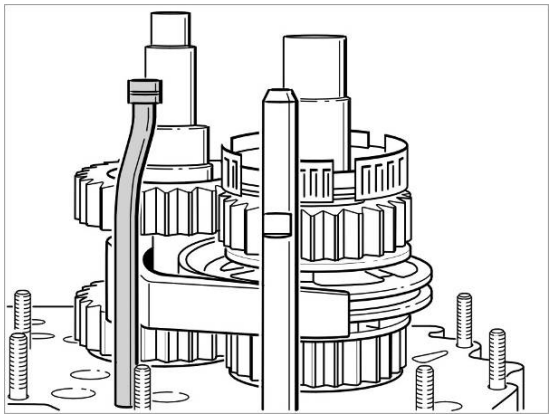

3. Drive out the 5th / 6th gear selector fork roll-pins with a suitable drift.

Attention: When removing the roll-pins, make sure the selector fork rod is properly supported.

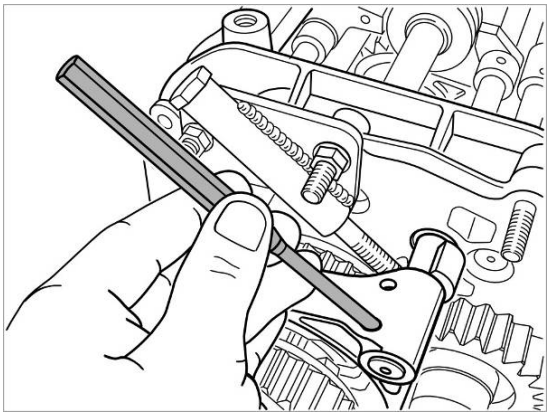

Downloaded from www.Manualslib.com manuals search engine

4. Remove the collared-nuts from the input and pinion gear shafts, Remove the reverse gears and rollers bearings. Remove the 5th and 6th gear ratios.

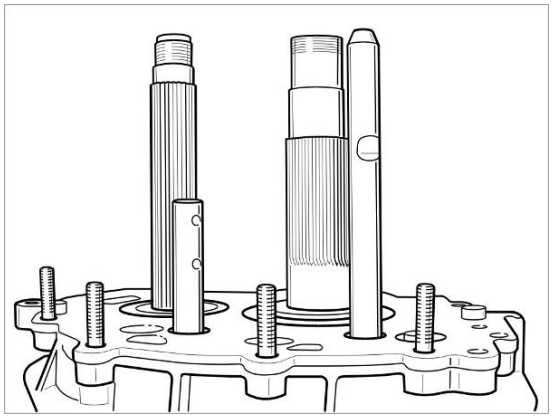

5. Remove the gear housing nuts and take off the housing, Remove roller bearing. Remove the 1st gear ratio wheel, Remove the 1st / 2nd gear dog-ring hub, Remove the selector rod including the 1st / 2nd gear selector fork.

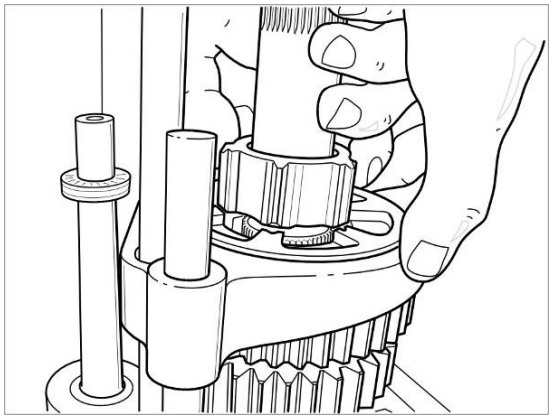

6. Remove the 5th / 6th gear selector rod and reverse gear

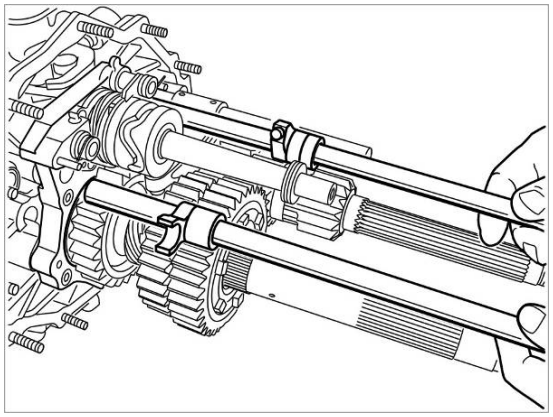

Downloaded from www.Manualslib.com manuals search engine

7. Remove all gear ratios, hubs etc from the pinion gear shaft

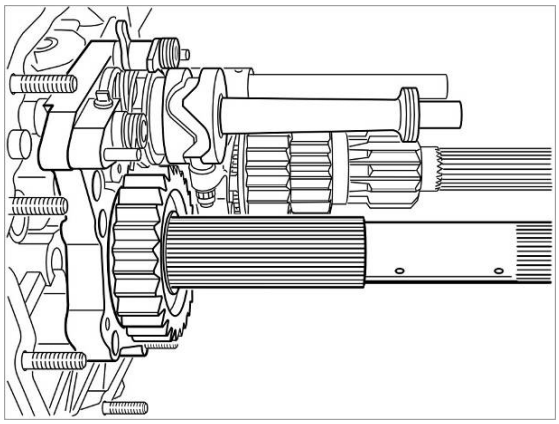

8. Loosen the oil scavenge pipe and twist to the side

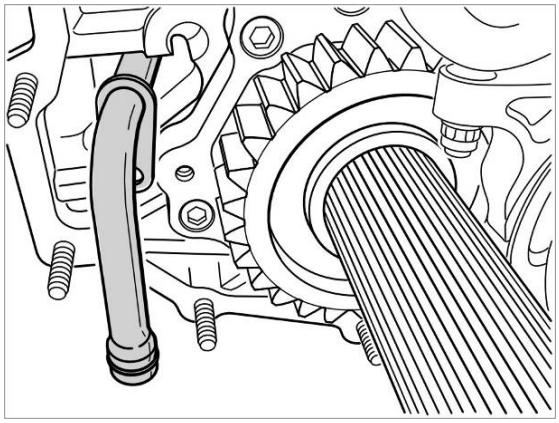

9. Loosen the mounting plate (7x M8 cap head socket screws) and remove completely

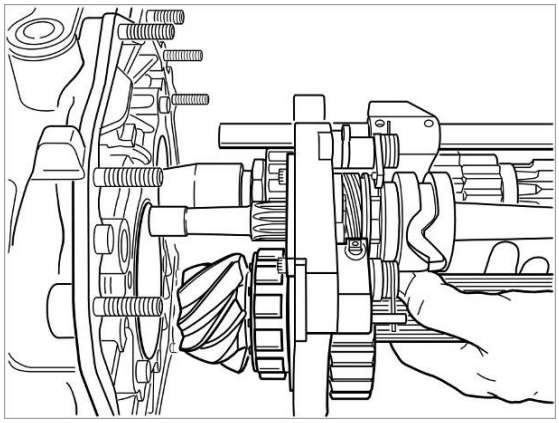

Downloaded from www.Manualslib.com manuals search engine

10. Pull the pinion gear shaft out of the mounting plate. After the removing the mounting plate, remove the selector rod with the 3rd / 4th gear selector fork.

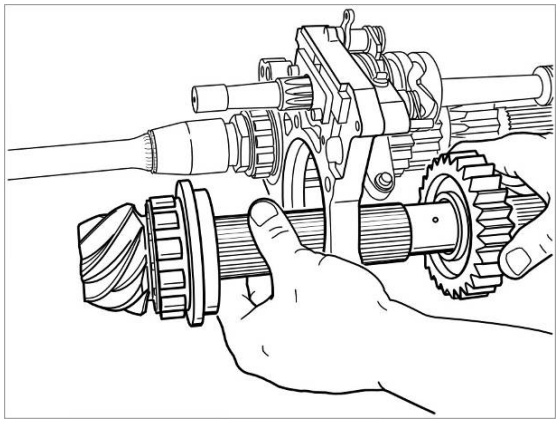

11. Remove the circlip and sliding sleeve from the input shaft

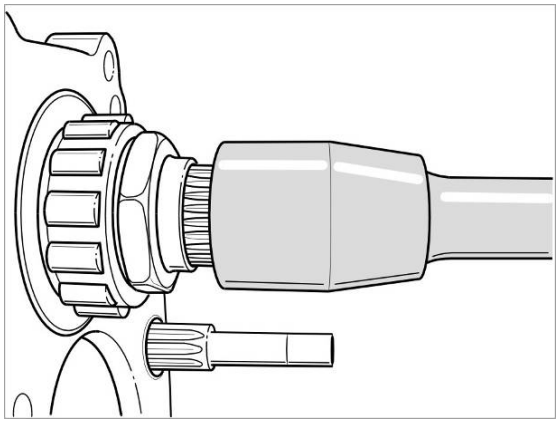

12. Clamp the input shaft with the special tool and loosen the collared nuts.

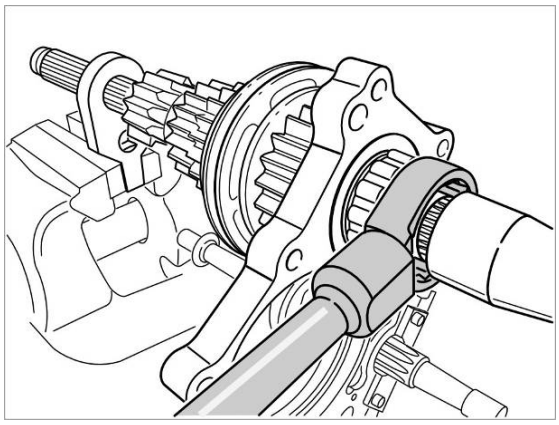

Downloaded from www.Manualslib.com manuals search engine

13. Separate input shaft

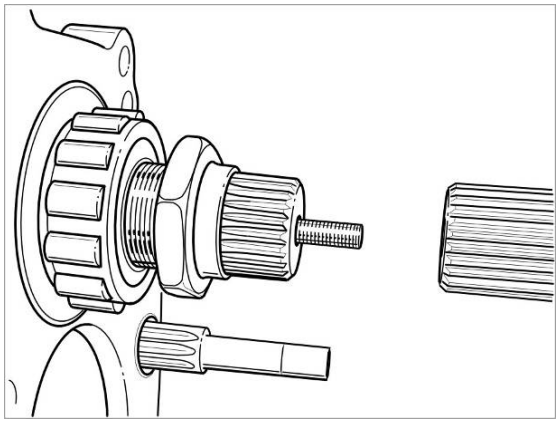

14. Pull the input shaft out of the mounting plate

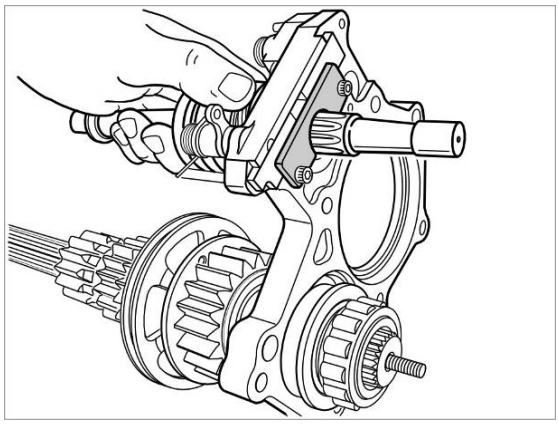

Downloaded from www.Manualslib.com manuals search engine

5.10.3. Gearbox assembly

1. Fit the splined 2nd gear and the 3rd and 4th idler gear wheels etc to the input shaft before pushing the complete shaft through the mounting plate.
2. Tighten the collared input shaft nut to 220 Nm.

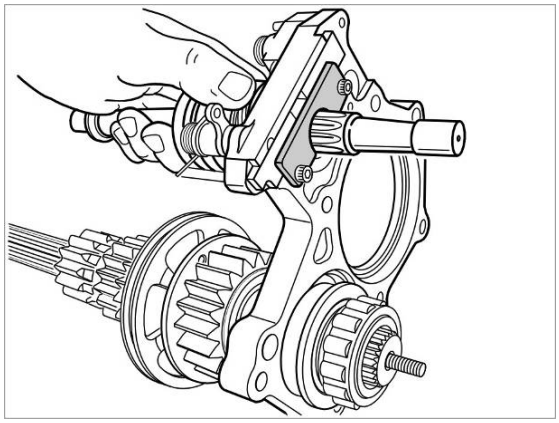

3. Bolt together the split input shaft and fit the sliding sleeve and circlip

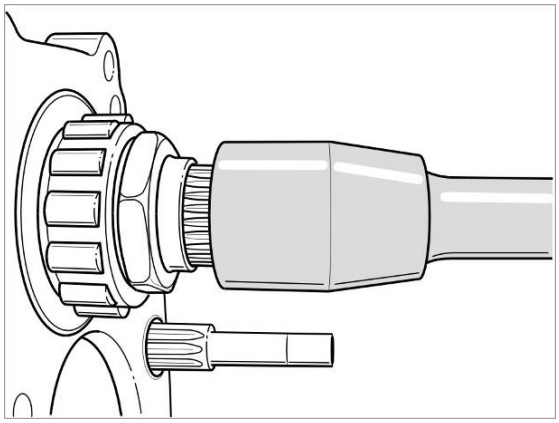

4. Fit the selector rod with the 3rd / 4th selector fork and push the cam follower into selector barrel track.
5. Fit the splined 4th gear wheel to the pinion gear shaft.

The 3rd/4th fixed gear wheel is not symmetrical and must be mounted with the raised surface facing the mounting plate.

Downloaded from www.Manualslib.com manuals search engine

6. Mount the gear selector barrel-drive in position before fitting the mounting plate.

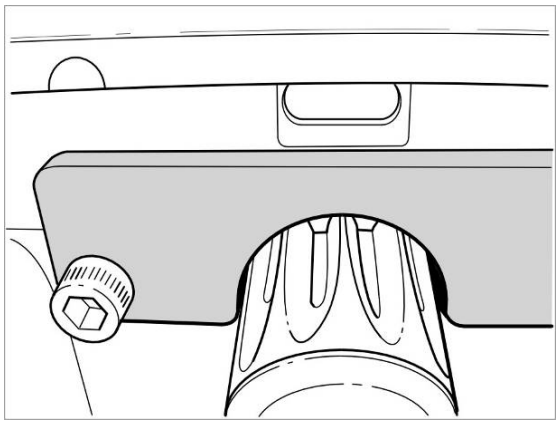

7. Fit the complete mounting plate to the differential housing and tighten (7x M8 cap head screws). Lightly coat the threads with Loctite 243

The gearbox must be positioned vertically before fitting the mounting plate

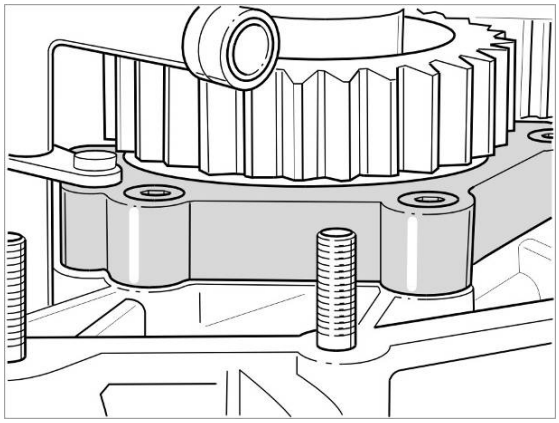

8. Rotate the selector barrel to the 1st gear position. Slide the oil pump drive, spacer, 3rd gear, bearing hub, needle roller bearing and 2nd gear to the shaft

Downloaded from www.Manualslib.com manuals search engine

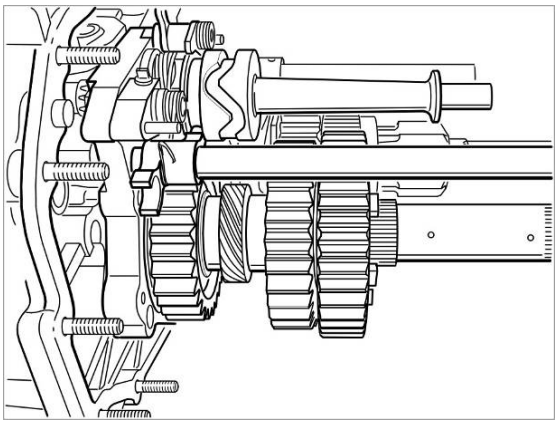

9. Mount the reverse gear gear-shift rod

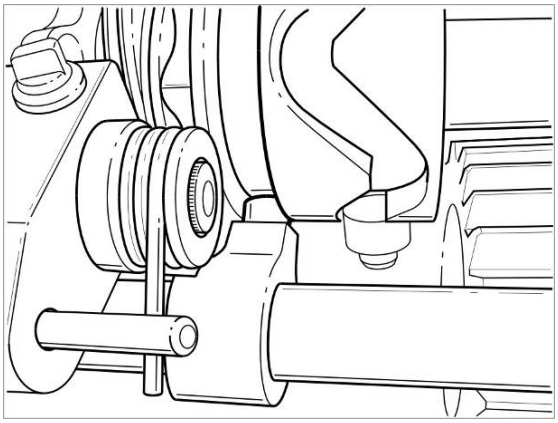

10. Slide on the dog-ring, 1st / 2nd selector fork and selector rod

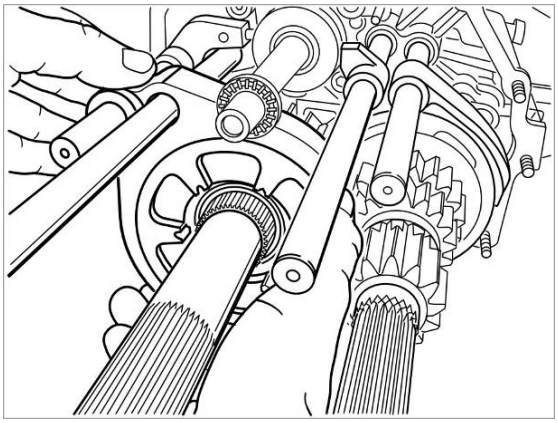

11. Fit 1st gear dog-ring hub. Push the 1st gear idler wheel onto the shaft

Downloaded from www.Manualslib.com manuals search engine

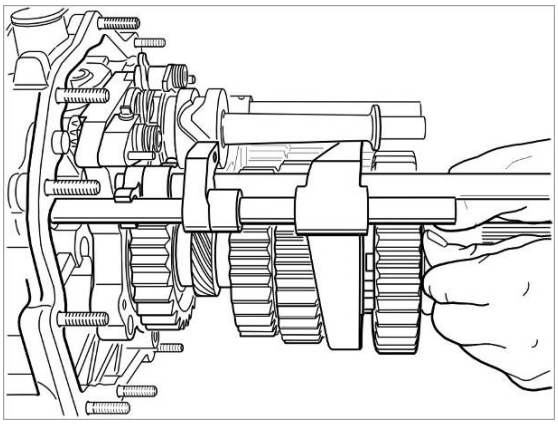

12. Fit the 5th / 6th gear selector rod with cam follower. Fit the roller bearing.

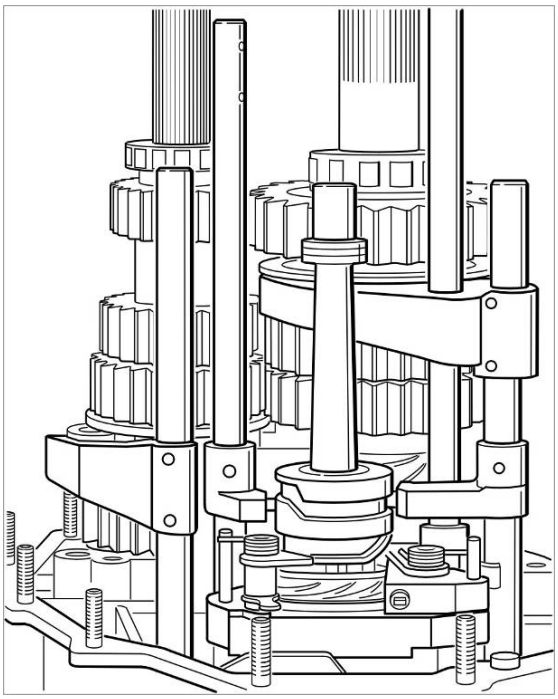

13. Fit the axial needle roller bearing and spacer ring to the selector barrel.

Downloaded from www.Manualslib.com manuals search engine

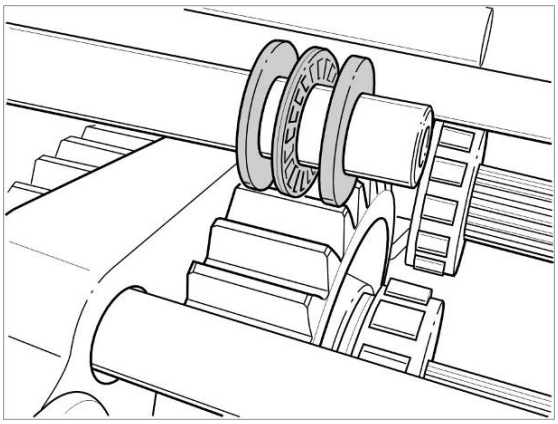

14. Fit the housing
15. Fit the splined 6th gear spacer hub and the 6th gear idler wheel, guide hub, dog-ring, selector fork and 5th gear idler wheel to the pinion gear shaft
16. Fit the splined 5th gear wheel to the input shaft
17. Fit the reverse gear and afterwards the selector fork

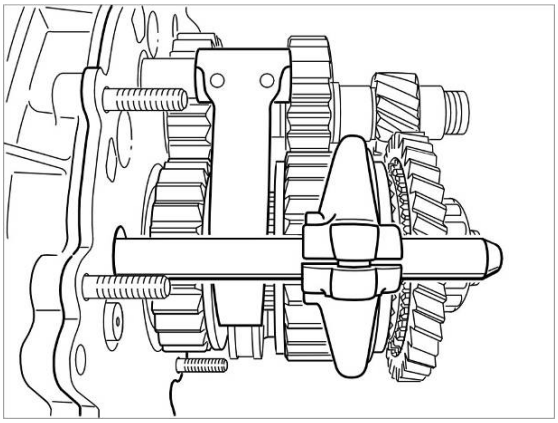

18. Tighten the collared input shaft nut to 220 Nm torque
19. Tighten the collared pinion shaft to 330 Nm torque

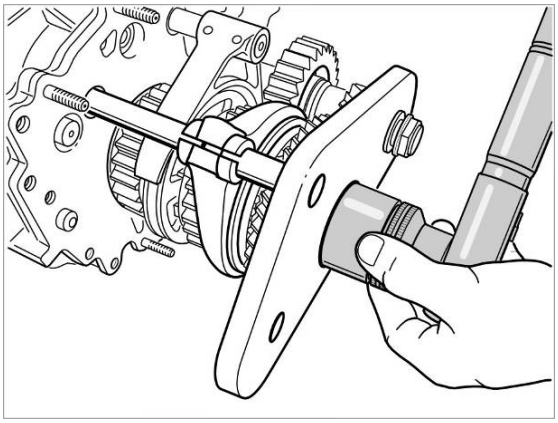

Downloaded from www.Manualslib.com manuals search engine

20. Secure the 5th / 6th gear selector fork with the roll-pin

When pressing in the roll-pin always support the selector fork with special tool 996.450.315.9A

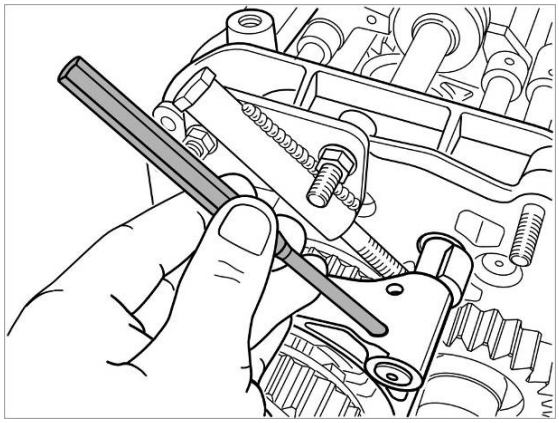

21. Fit the special reverse gear tool 996.450.311.9A
22. Engage reverse gear by rotating the selector barrel. Slide the selector fork and dog-ring till reverse gear is fully engaged.

There must be play on both sides between the selector fork and dog-ring

23. Tighten the clamping screw in this position

The reverse gear selector fork clamp screw must only be tightened when the cut away housing is in position

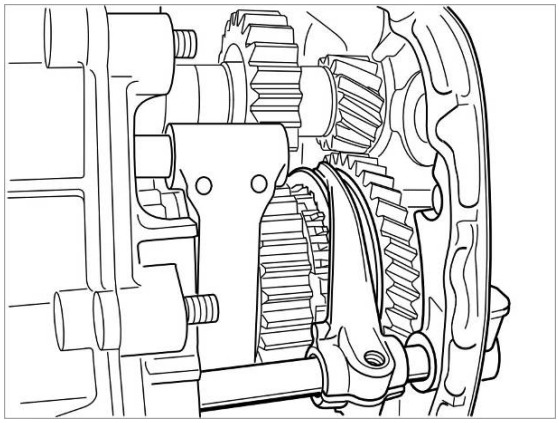

Downloaded from www.Manualslib.com manuals search engine

24. Remove the special tool. Fit the oil tube, without the use of excessive force, to the casing and locate in position with the retaining screw.

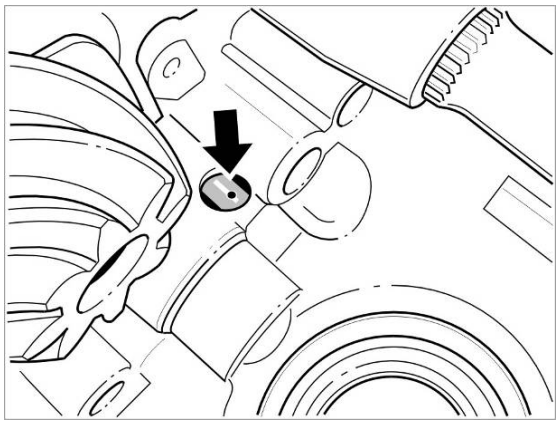

An incorrectly fitted oil tube can collide with the gear shift forks

When the oil tube is fitted correctly it is visible through the bore in the differential housing. This visual check is only possible with the differential removed.

25. Smear the gearbox cover mounting faces lightly with sealing compound.
26. Fit the drive shaft and gear recognition potentiometer as marked during removal.

The potentiometer MUST be adjusted after the gearbox has been fitted to the car (refer to Potentiometer Adjustment).

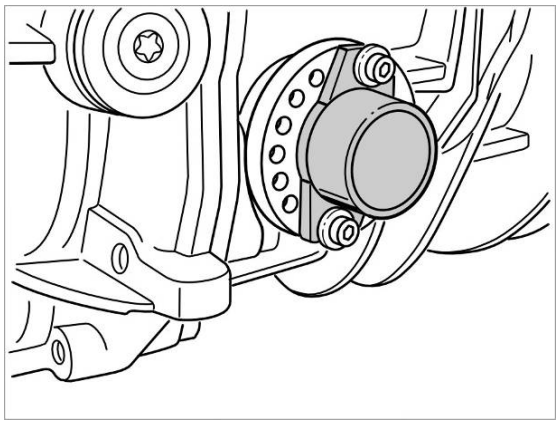

Downloaded from www.Manualslib.com manuals search engine

27. Mount the oil pump

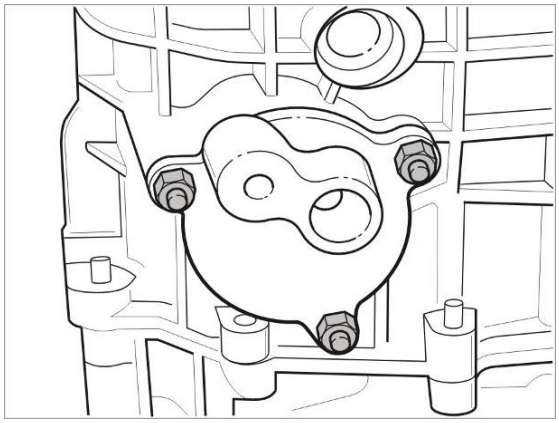

5.10.4. Changing the selector barrel

1. To remove the locking pawl neutral latch and alignment pawl, unscrew the selector barrel and lock, raise the selector barrel

When removing the barrel, make sure that the locking pawls, springs etc do not fall out.

When replacing the selector barrel, the position of the barrel track must be refitted in exactly same position

2. Place the old selector barrel, with spacer washers, on the special jig. The barrel must sit correctly on the bearing spacer ring

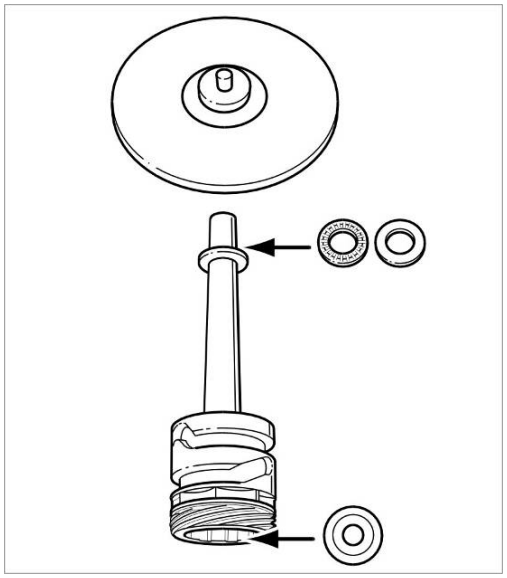

Downloaded from www.Manualslib.com manuals search engine

3. Determine the dimension of the old selector barrel between the 3rd/4th track

4. Set the new selector barrel in position and determine the dimension as above.

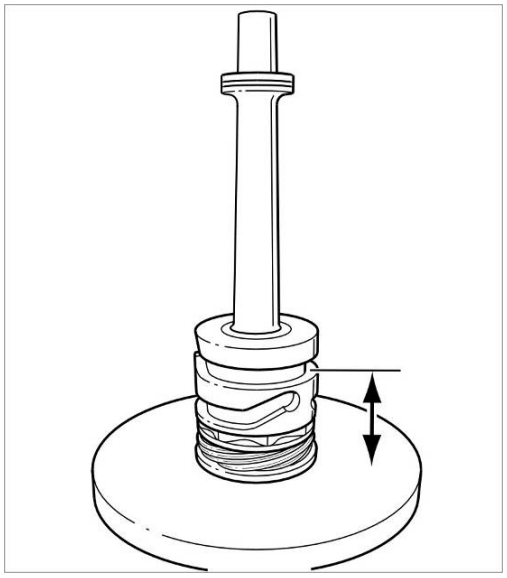

5. Measure the dimension between the base of the axial bearing, including spacer, of the old selector barrel to the jig.

6. Fit the new selector barrel to the jig and check the dimension as described above.

7. Calculate the spacer required, place in the new selector barrel and check the dimension.

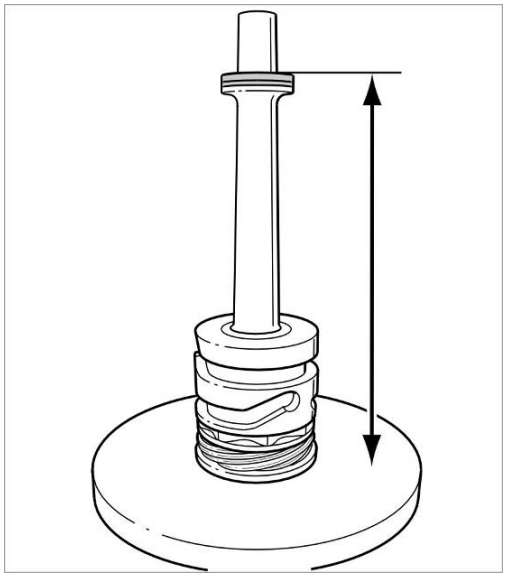

Downloaded from www.Manualslib.com manuals search engine

8. Fit the selector barrel up to the alignment pawl, press the pawl together till the selector barrel slides into position.

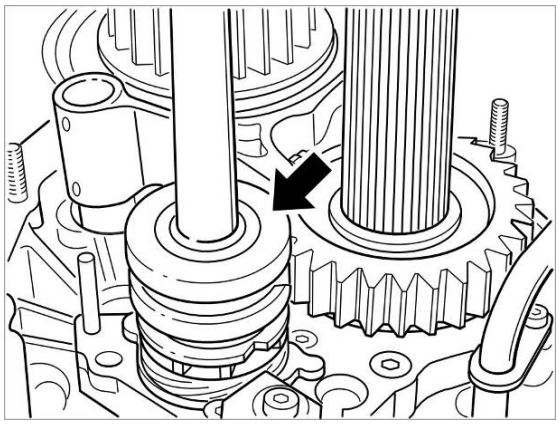

9. Replace the selector barrel alignment pawl. Bolt must be secured with Loctite 243.

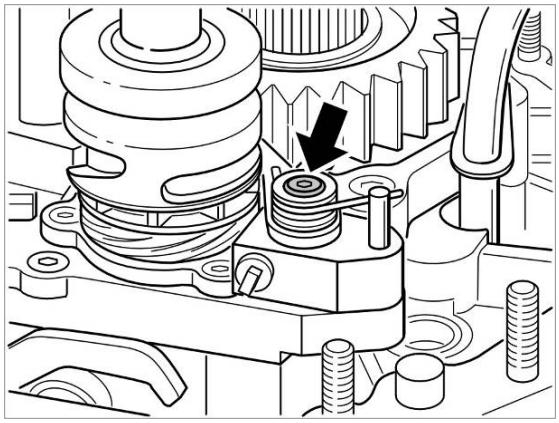

10. Replace the locking pawl neutral latch bolt. It must be secured with Loctite 243.

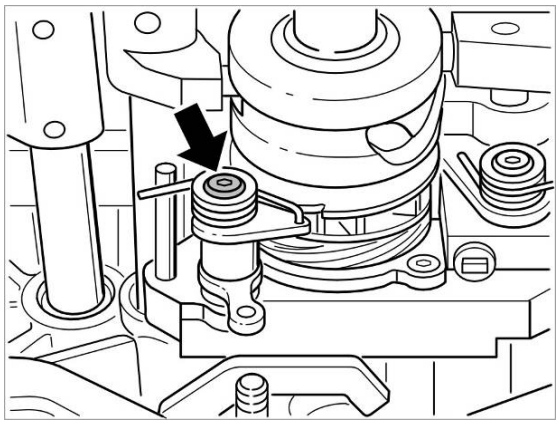

Downloaded from www.Manualslib.com manuals search engine

5.10.5. Setting the 4-point bearing preload

1. Refit the previously removed washer (if not damaged) in the gearbox housing
2. Position the drive shaft including 4-point bearing without washer H2 in the gearbox housing
3. Position the pre-mounted clamp plate (selector barrel with SW1, drive shaft) on the gearbox housing and tighten bolts
4. Determine the axial play of the 4-point bearing

The 4-point bearing requires an axial preload of 0.01 – 0.07 mm (try to achieve the average value 0.04 mm)

The value for setting washer H2 is calculated as follows:

Thickness H2 = axial play 4-point bearing + 0.04 mm

Example: Measured play: 1.06 mm
H2 = 1.06 mm + 0.04 mm = 1.10mm

5.10.6. 4th gear setting dimension

Place the H3 washer on the 4-point bearing

Only use ONE spacer! Two spacers must not be used to achieve the dimension 44.35 mm (see gearbox scheme drawing)!

Downloaded from www.Manualslib.com manuals search engine

5.10.7. Setting the crown wheel & pinion

1. Position and fasten pre-mounted clamp plate (selector barrel with SW1, driveshaft) to the gearbox housing.
2. Fit the oil pump drive gear and H4 washer
3. Fit the gear ratio pairs 1st/2nd and 3rd/4th including shift rod
4. Position the needle roller bearing and the SW2 washer, as previously removed (when not damaged), to the selector barrel.
5. Determine the depth of the cut-away housing used

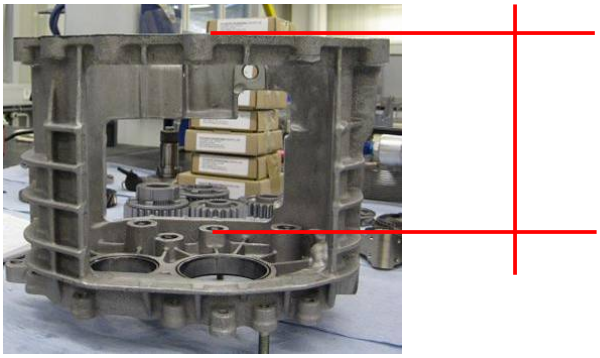

6. Position and fasten the cut-away housing to the gearbox housing
7. Position the H5 washer to the driveshaft
8. Slide the mounting sleeve special tool 996.450.327.90 onto the driveshaft and fix to the driveshaft with the nut (M30x1.25, 330 Nm).

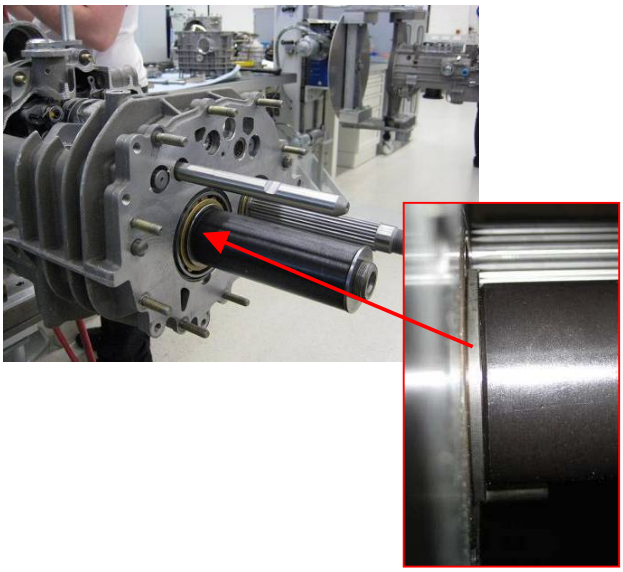

Downloaded from www.Manualslib.com manuals search engine

9. Note the setting dimension E on the crown wheel

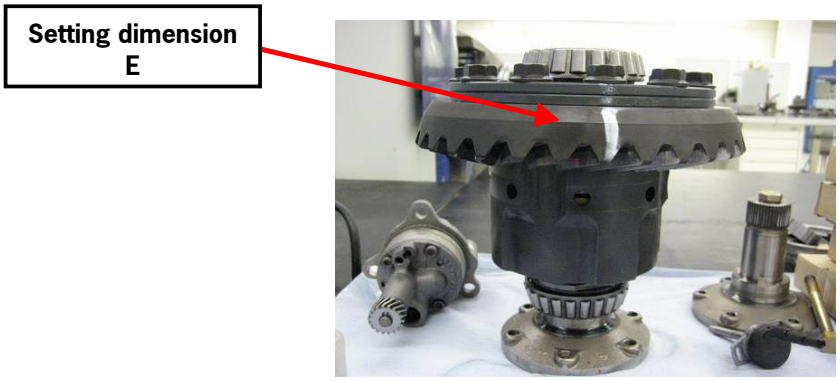

The setting dimension of the crown wheel to be used gives the distance

Centre axis crown wheel –pinion driveshaft

The actual distance crown wheel – pinion must correspond to the setting dimension E given on the crown wheel. The distance crown wheel to pinion is specified by the washer H1.

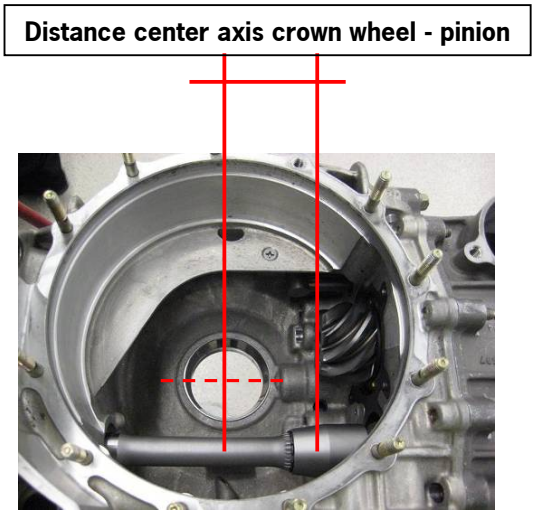

10. To determine the actual distance crown wheel – pinion mount suitable measuring equipment and fit and tighten the gearbox cover.

Downloaded from www.Manualslib.com manuals search engine

11. Determine the distance crown wheel – pinion

The washer H1 to be used is determined from the following factors:

Thickness H1 – setting dimension E – measured distance
+ thickness of previously fitted washer H1

If the measured distance is larger than the given setting dimension, a thinner washer than the previously fitted washer H1 must be used.

Example: Setting dimension E = 70.30 mm; H1 fitted = 1.0 mm;
Measured distance = 70.50 mm

Thickness H1 = 70.30 mm – 70.50 mm + 1.0 mm = **0.8 mm**

→ The H1 washer to be fitted must have a thickness of 0.8 mm.

If H1 is changed H2 must be corrected accordingly.

12. Dismantle the gearbox and fit the calculated washer H1.

Downloaded from www.Manualslib.com manuals search engine

5.10.8. Centre position shift collar

1. Position dogs of the relevant idler gear centrally between the ends of the shift fork. Afterwards push the shift collar away from the dog-ring to be measured and measure the distance between the dog shift collar and dog ring with a feeler gauge.

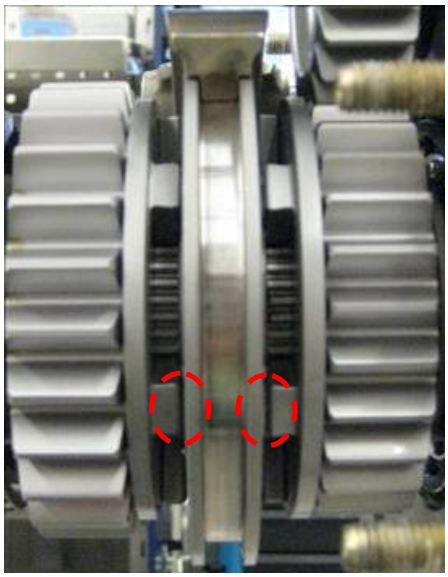

Since the dog hubs, on which the idler gear dogs are found, have axial movement they should be pressed by hand towards the gear or the collar during the measurement procedure. The measurement method must, however, be identical for the dog collar of both gears.

The centre position of shift collar ½ is set by the washer H4.

The centre position of shift collar 3/4 is made with the washer SW1. **If the washer SW1 must be changed it should be noted that the non-shouldered side of the washer is machined!**

The centre position of shift collar 5/6 is set by the adjustment washer H5.

If it is not possible to centre the shift collar due to tolerance reasons, the distance to the even gears (2,4 & 6) should be greater than to the uneven gears.

Downloaded from www.Manualslib.com manuals search engine

5.10.9. Setting the selector barrel

The axial play of the selector barrel is adjusted with the washer SW2. The selector barrel play can only be checked with the cut-away housing mounted.

Determine the depth of the cut-away housing used and also that of the housing fitted and/or to be fitted.

The difference of the two depths should be taken into account when selecting the washer SW2.

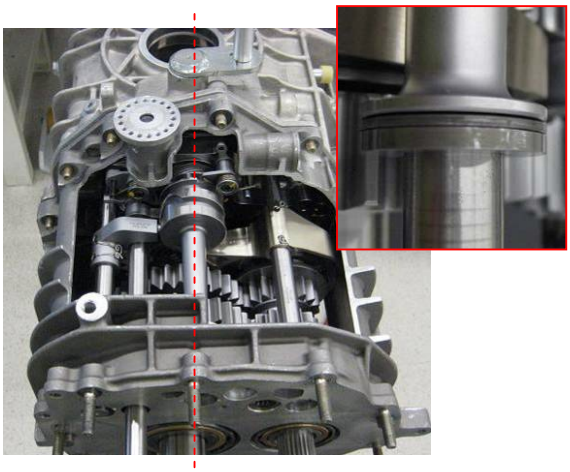

If the washer SW1 is changed the selector barrel play changes.

Selector barrel axial play: 0.03 – 0.05 mm

Downloaded from www.Manualslib.com manuals search engine

5.11. Tightening torques gearbox

Component	Bolt dimensions	Tightening torque [Nm]
Oil filler plug	M22 x 1,5	40
Oil drain plug	M22 x 1,5	40
Clamp plate on gearbox housing	M8 x 40	23 plus Loctite 243
Selector fork screw	M8 x 30	23
Input shaft nut	M22 x 1,5	220
Input shaft nut	M30 x 1,5	220
Pinion shaft nut	M30 x 1,25	330
Screw joint flange	M10	65
Crown wheel on differential housing	M12 x 1,25	180 plus Loctite270
	Always renew the bolts when replacing the crown wheel	
Mounting on chassis	M10 x 65	65
Gearbox mount on gearbox	M8	33 plus Loctite 243
Mounting on gearbox mount	M10	65

5.12. Gearbox mileage

20 hours (sprint races)

30 hours (endurance races)

Downloaded from www.Manualslib.com manuals search engine

6. Suspension

Both the front and rear suspension have been modified to suit the demands of competition and to enable the accurate and easy adjustment of camber, wheel alignment and ride height.

The front suspension is of the independent McPherson strut type with aluminium wishbones and the rear suspension is multi-link with 'LSA – System' (light, stable, agile).

6.1. Front suspension

- McPherson strut suspension
- Adjustable anti-roll bar
- Non-adjustable gas pressure dampers

6.1.1. Front springs

A helper spring is fitted with the main spring on the front axle. The adjustment of the vehicle ride-height is made by rotating the spring platform.

Main spring: 100/60/260
Helper spring: 75/60/43

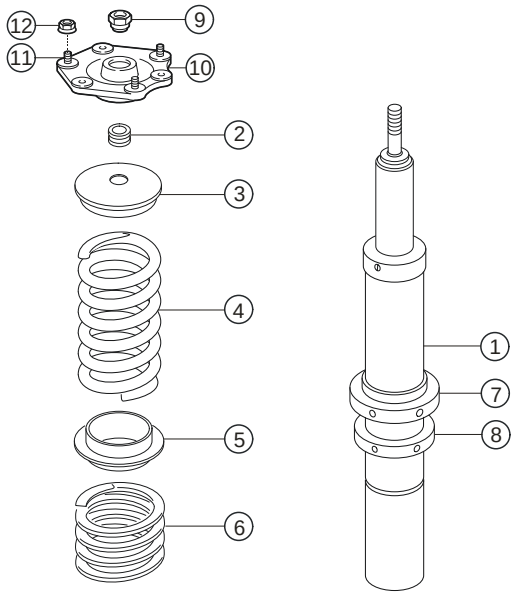

Changing the ride-height by 10 mm changes the toe setting by 3.2'. The ratio on the front axle springs is 0.9.

Downloaded from www.Manualslib.com manuals search engine

6.1.2. Front dampers

Non-adjustable Sachs dampers are fitted to the front axle.

6.1.3. Front anti-roll bar

The front anti-roll bar has a 7 position adjustment range on both sides, each position results in the blade being adjusted by an angle of 15°. The maximum stiffness of the anti-roll bar is achieved when the blade is aligned parallel to the anti-roll bar link. The minimum stiffness is achieved when the blade is aligned at 90° to the anti-roll bar link.

Always use suitable tools to rotate the blade as incorrect tools can cause damage. Notches or other damage can cause the blade to break.

In the following diagram the component stiffness of the front ARB dependent on blade position is represented:

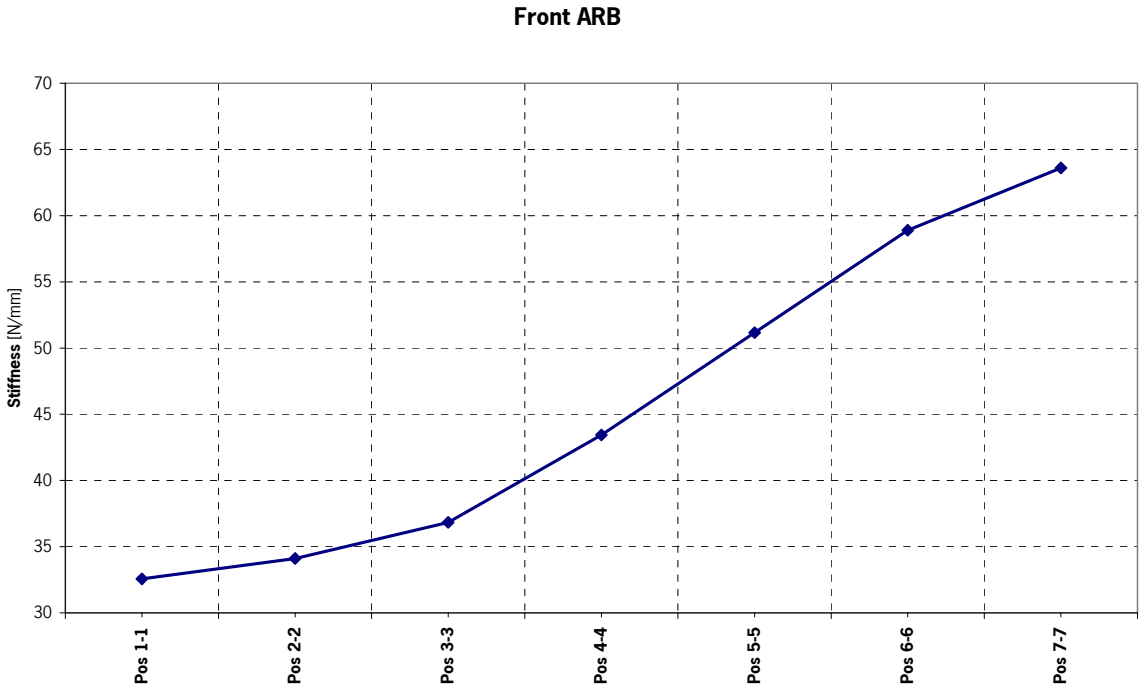

Downloaded from www.Manualslib.com manuals search engine

6.1.4. Steering system

The 911 GT3 Cup is fitted with an electrical servo assisted rack and pinion steering system.

System pressure: 96 bar

6.1.4.1. Servo pump control

Control of the electrical servo pump is made via terminal 61. This means that the servo pump only operates when the engine is running and the alternator is charging..

6.1.4.2. Steering system maintenance

System leak check:

With the engine idling, carefully rotate and hold the steering wheel in the full lock position to ensure the greatest possible system pressure is achieved. Check all the lines, pipes and fittings for leakage. When implementing the test this level of system pressure should be held for an absolute maximum of ten seconds. If it is necessary to repeat this procedure, a pause of at least 10 seconds should be made between tests.

The electric servo pump is located in the luggage compartment. The fluid reservoir is mounted directly on the pump.

The fluid level is checked with the steering in the straight-ahead position and with the engine running at idle speed.

The rack and pinion steering and servo pump should, under no circumstances be repaired or dismantled. Damage to the power steering system can occur through a lack of oil circulating in the hydraulic system. Due to the high system pressure even a small loss of fluid through leakage can damage the servo pump.

Downloaded from www.Manualslib.com manuals search engine

Bleeding the steering system:

This procedure is best carried out by two people.

To fill the complete steering system after fitting a new steering rack, oil lines or because of excessive hydraulic fluid loss, start and then immediately stop the engine several times. This procedure causes the fluid level in the reservoir to sink rapidly, therefore ensure that the reservoir is refilled constantly with 'Pentosin' (000.043.206.56) as the engine runs. The reservoir must never be allowed to run dry during this procedure.

The electric hydraulic pump only operates when the engine is running. Fill the reservoir before starting the engine to bleed the system. Recheck the reservoir level immediately after the engine has started.

Rotate the steering wheel quickly and repeatedly from one lock to the other to allow air in the cylinders to escape. To prevent unnecessary system pressure spikes do not rotate the steering wheel against the stops with any more force than required.

Check the fluid level constantly during this procedure. If the oil level continues to sink, add "Pentosin" oil till the reservoir fluid level remains constant and no air bubbles surface in the reservoir when the steering wheel is turned back and forth.

Check the fluid level with the dipstick integrated into the reservoir top when the hydraulic pump is running.

Downloaded from www.Manualslib.com manuals search engine

6.2. Rear suspension

- Multi-link suspension
- Adjustable anti-roll bar
- Non-adjustable gas pressure dampers

6.2.1. Rear springs

A helper spring is fitted with the main spring on the rear axle. The adjustment of the vehicle ride-height is made by rotating the spring platform.

Main spring: 130/60/260

Helper spring: 80/60/60

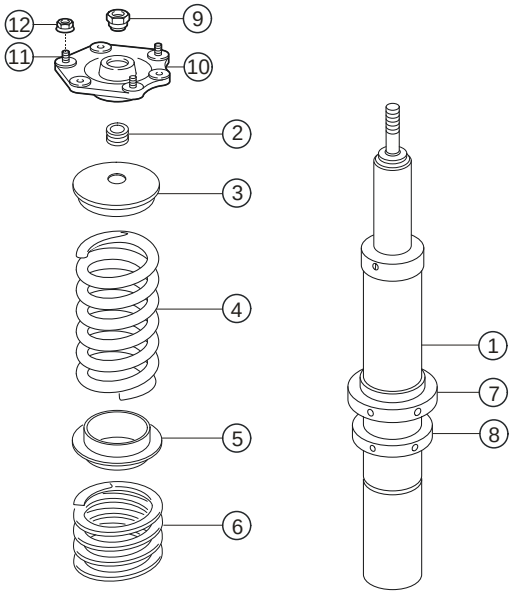

Changing the ride-height by 10 mm changes the toe setting by 8.3'. The ratio on the rear axle springs is 0.86.

Downloaded from www.Manualslib.com manuals search engine

6.2.2. Rear dampers

Non-adjustable Sachs dampers are fitted to the rear axle.

6.2.3. Rear anti-roll bar

The rear anti-roll bar has a 7 position adjustment range on both sides, each position results in the blade being adjusted by an angle of 15°. The maximum stiffness of the anti-roll bar is achieved when the blade is aligned parallel to the anti-roll bar link. The minimum stiffness is achieved when the blade is aligned at 90° to the anti-roll bar link.

Always use suitable tools to rotate the blade as incorrect tools can cause damage. Notches or other damage can cause the blade to break.

I In the following diagram the component stiffness of the rear ARB dependent on blade position is represented:

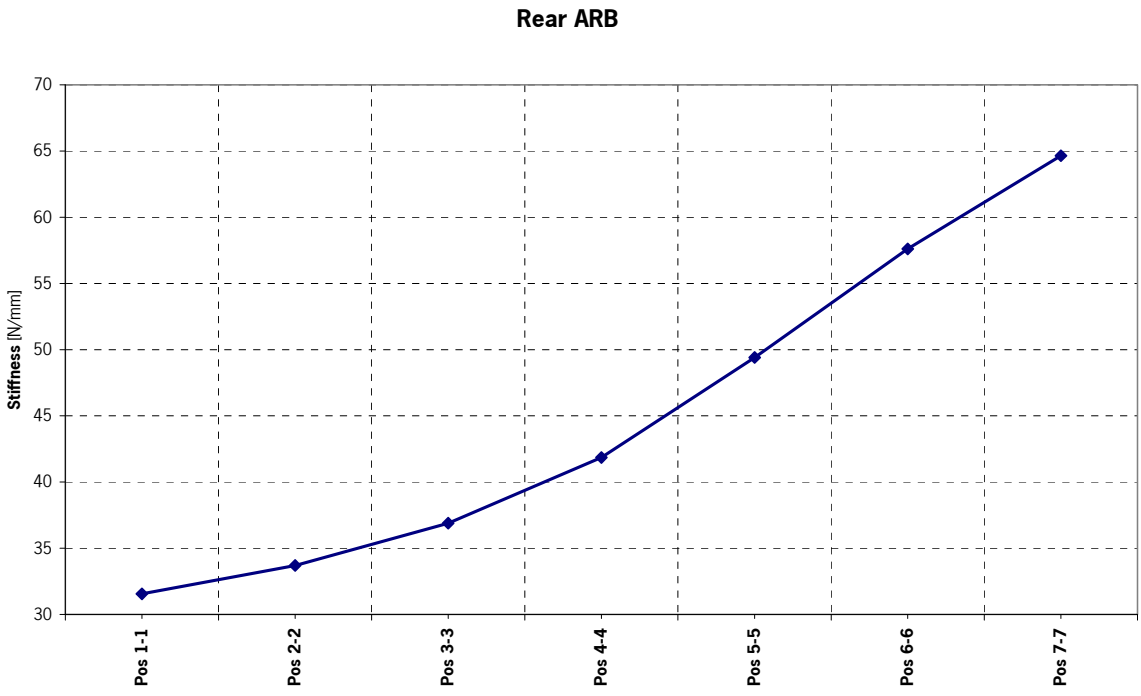

Downloaded from www.Manualslib.com manuals search engine

6.2.4. Driveshafts

It is recommended that new cars and/or newly fitted driveshafts should be run-in for approximately 50 km at a maximum speed of 200 km/h at low torque.

- **Only use Krytox grease to repack the joints when servicing the driveshafts**
- **Driveshafts already used must NOT be swapped from left to right and vice versa**

Grease quantity outer joint:	150 g
Grease quantity inner joint:	140 g
Porsche part number. (120g tube):	996.332.897.9A

6.2.4.1. Tightening Instructions

1. Tighten all bolts according to the attached order with **30 Nm**
2. Tighten all bolts according to the attached order with **60 Nm**
3. Tighten all bolts according to the attached order with **90 Nm**

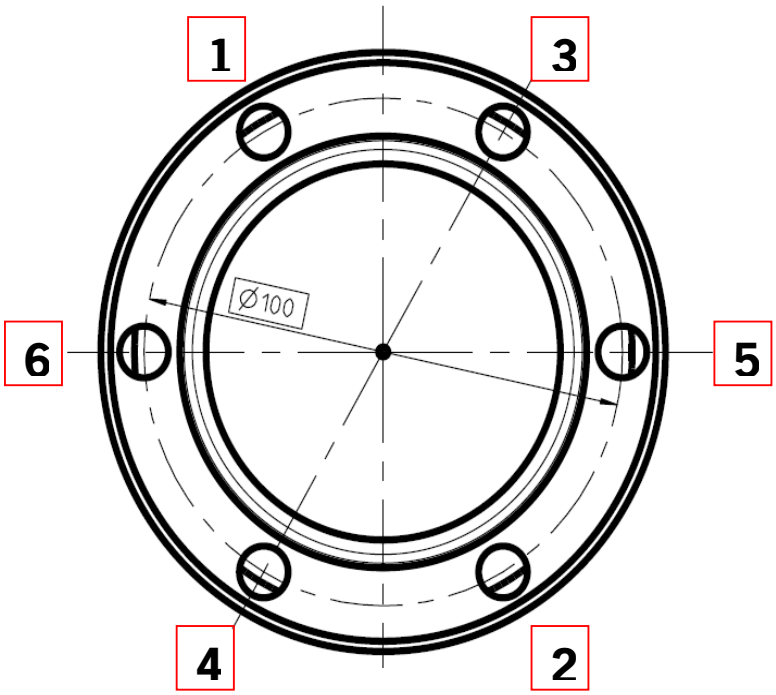

The bolts should be slightly oiled. These instructions have to be followed after each loosening of the driveshaft screwing.

Downloaded from www.Manualslib.com manuals search engine

6.3. Basic wheel alignment

In the event of an accident or any other damage occurring to the suspension every component, including those not directly affected, should be measured, checked for cracks and, where necessary, replaced (e.g. steering, wishbones, uprights, ball-joints, centre lock wheel nuts and all fasteners).

The wheel alignment should be carried out using an optical and/or electronic or mechanical suspension alignment device. The measurement procedure described in the device operating instructions should be followed.

Electronic suspension alignment devices can be purchased from the following company:

Beissbarth GmbH
Hanauer Straße 101
D-80993 München
Telephone: +49-(0)89-14901-0
Telefax: +49-(0)89-14901-285
www.beissbarth.com

Downloaded from www.Manualslib.com manuals search engine

Porsche Motorsport parts sales offers a cord alignment tool: 997.450.351.90

Bracket front left:	997.450.561.90
Bracket front right:	997.450.562.90

The following points must be followed before alignment can begin:

- Set the front and rear tyre pressures to hot running pressure, if set-up wheels are used their dimensions must correspond with the tyre dimensions at the relevant tyre pressure
- Measure the wheel alignment, including camber, toe-in, ride height and corner weights with the fuel cell half full and the appropriate driver ballast placed in the driver's seat.
- Put the car on the corner-weight scales.
- The suspension spherical bearings and wheel bearing play must be checked (wheel bearing play cannot be adjusted) and replaced where necessary.
- Place all four wheels on the swivel plates.
- Lock the steering in the straight ahead position. Check that the steering wheel lock from left to right is equal when the steering wheel is in the straight ahead position.

6.4. Wheel alignment procedure

The following work sequence is recommended when making a complete alignment check:

1. Disconnect the front and rear anti-roll bars
2. Pre-set the vehicle ride height
3. Set the camber then the toe on the rear axle
4. Set the camber then the toe on the front axle
5. Set ride heights and corner-weights
6. The corner weights are adjusted by changing the ride height, the lowest possible corner weight difference is the target (left to right).

Downloaded from www.Manualslib.com manuals search engine

6.4.1. Front axle

6.4.1.1. Ride height

The car must be placed on a level surface (set-up platform) to check the ride height. The front and rear suspension should be loaded and unloaded (compressed) several times to allow the suspension to settle.

The ride height is adjusted by rotating the lower spring platform.
Measurement point front axle:

Downloaded from www.Manualslib.com manuals search engine

6.4.1.2. Toe

The toe-rod length can be set using the clamping screw.

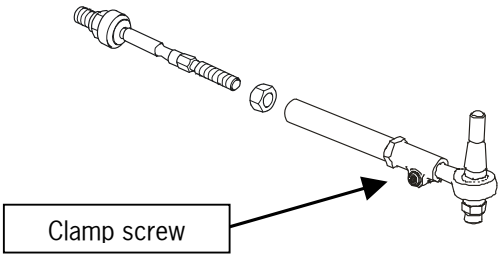

Porsche Motorsport provides a special tool to remove the trunnion pin: 997.450.349.9B

Assembly front toe rod:

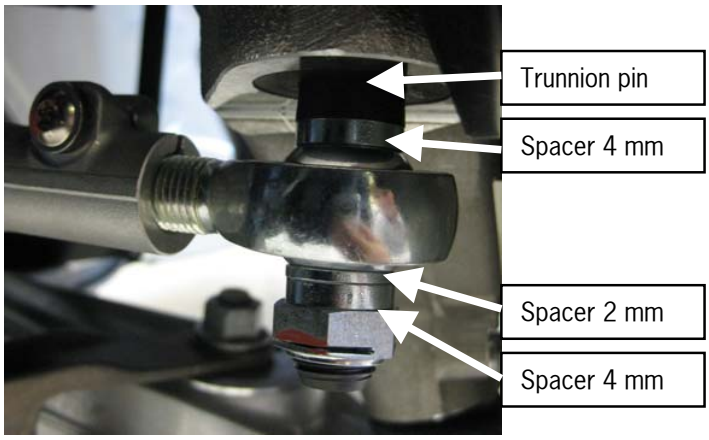

Downloaded from www.Manualslib.com manuals search engine

6.4.1.3. Camber

The front wishbone can be adjusted as follows:

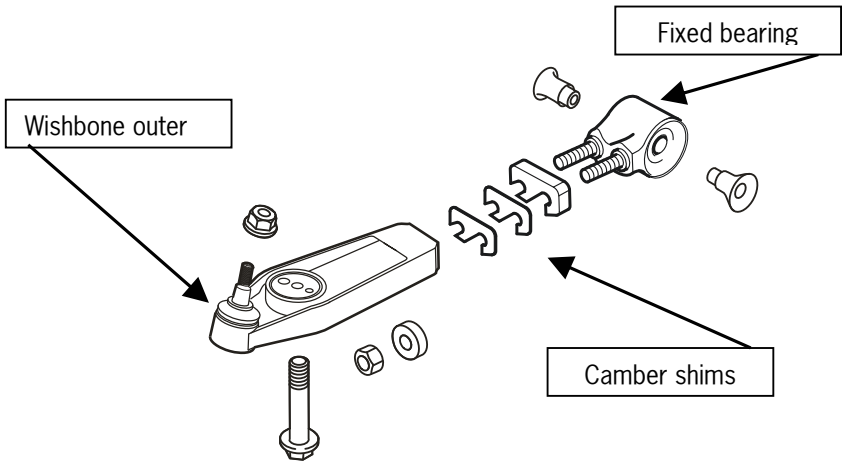

- Camber shims: The wishbone length can be adjusted using different spacers, a 1 mm adjustment in length equates to a camber change of approximately 6'
- Porsche Motorsport provides the following special tool to remove the trunnion pin:

  Centring bolt: 996.721.920.90

  Plunger rod 996.721.923.90

  Plunger 996.721.921.90
- The semi-trailing arms in the front control arms must be left in the position in which they are delivered (front position/shortest wheelbase) (mid-position is not permitted)

Downloaded from www.Manualslib.com manuals search engine

6.4.1.4. Upper mount

The upper-mount position can be adjusted by using the slots in the car body.

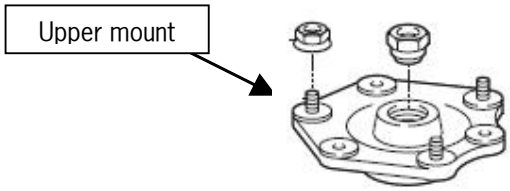

Fine camber adjustment: 1 mm equals 6'

6.4.2. Rear axle

6.4.2.1. Ride height

The car must be placed on a level surface (set-up platform) to check the ride height. The front and rear suspension should be loaded and unloaded (compressed) several times to allow the suspension to settle.

Ride height adjustment is made by rotating the spring perch.
Measurement point rear axle:

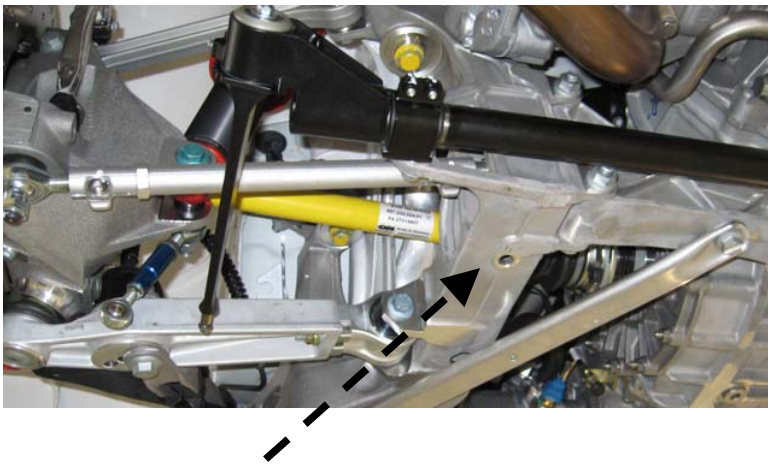

Downloaded from www.Manualslib.com manuals search engine

6.4.2.2. Toe

The length of the toe-rod can be adjusted after loosening the clamp bolts.

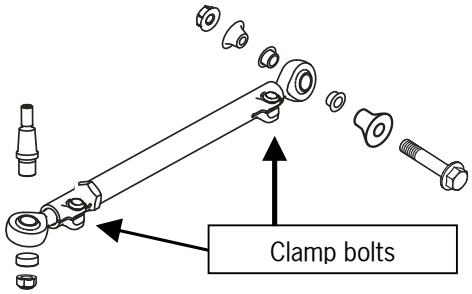

Porsche Motorsport provides a special tool to remove the trunnion pin: 997.450.345.9B

Assembly rear toe rod:

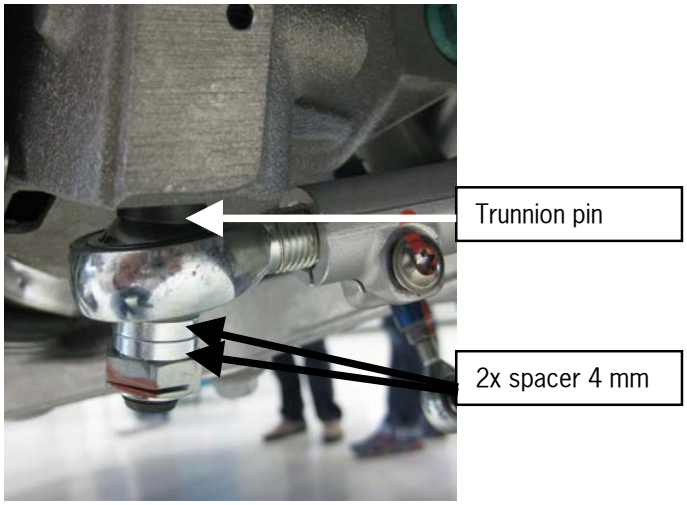

Downloaded from www.Manualslib.com manuals search engine

6.4.2.3. Camber

The rear lower-wishbone can be adjusted as follows:

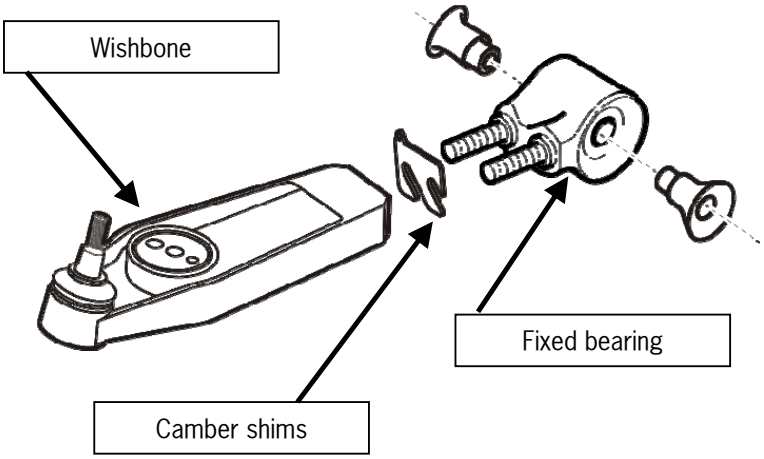

- Camber shims: The wishbone length can be adjusted using different spacers, a 1 mm adjustment in length equates to a camber change of approximately 12'
- The bearing points of the rear control arms (wheel side)must be left in the position in which they are delivered (back position) and must not be rotated

6.4.3. Summary of suspension geometry adjustment components

	Front axle	Part number	Rear axle	Part number
Lower wishbone				
+ spacer shims [mm]	10	996.341.543.95	10	996.341.543.95
	7	996.341.543.93	7	996.341.543.93
	3	996.341.543.92	3	996.341.543.92
	2	996.341.543.91	2	996.341.543.91
	1	996.341.543.90	1	996.341.543.90
	0,8	996.341.543.98	0,8	996.341.543.98
	0,6	996.341.543.97	0,6	996.341.543.97
	0,3	996.341.543.96	0,3	996.341.543.96

Downloaded from www.Manualslib.com manuals search engine

6.4.4. Suspension set-up

The basic settings for the suspension are listed in the following table. These settings can be used as the basic set-up for the majority of race tracks.

Basic settings			
		Front axle Left / right	**Rear axle** Left / right
Ride height		75 mm	117 mm
Camber		3° 50'	3° 20'
Toe		-5' / -5'	+15' / +15'
Anti-roll bar		3/3	4/4
Wing setting			P7

6.5. Working on the suspension

6.5.1. Changing wheel bearings

Follow the following points when changing defect wheel bearings:

- Heat the upright to 110°C to remove or fit the wheel bearing
- Press the wheel bearing out of the upright
- Put the wheel bearing in by hand
- It should be noted that the wheel bearing sits correctly on the wheel bearing seat in the upright after being pushed in
- Tighten the wheel bearing cover to the stipulated torque
- A maximum of one wheel bearing change per upright (bearing seat) recommended by Porsche Motorsport

Re-tighten the wheel bearing cover to the stipulated torque after approximately 200 km.

Downloaded from www.Manualslib.com manuals search engine

6.6. Tightening torques suspension

6.6.1. Front axle

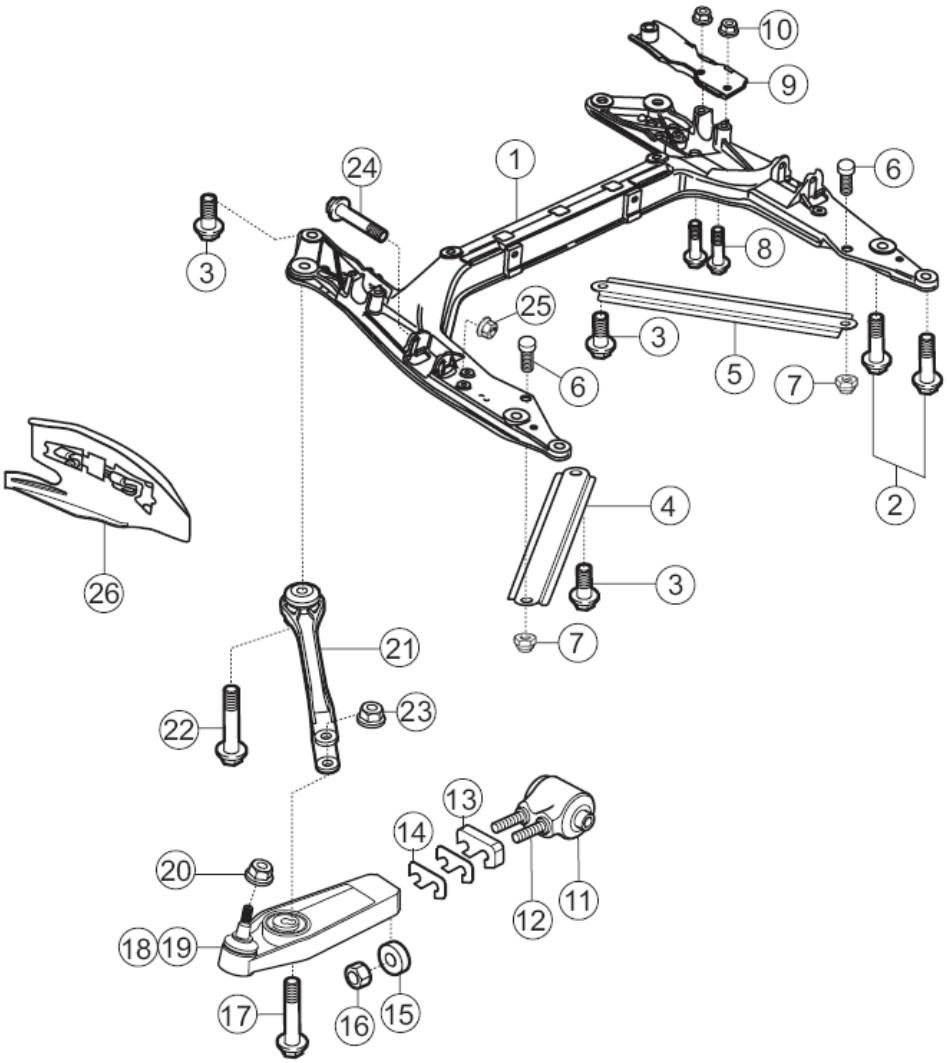

Position	Dimension	Tightening torque [Nm]
2	M14 x 1.5 x50	160
3	M12 x 1.5 x30	100
7	M12 x 1.5	100
10	M10 x 1.5	65
16	M8	25
20	M12 x 1.5	75 (replace after dismantling)
22	M14 x1.5x120	160
23	M14 x 1.5	160
24	M12 x 95 10.9	120
25	M12	120

Downloaded from www.Manualslib.com manuals search engine

6.6.2. Front upright

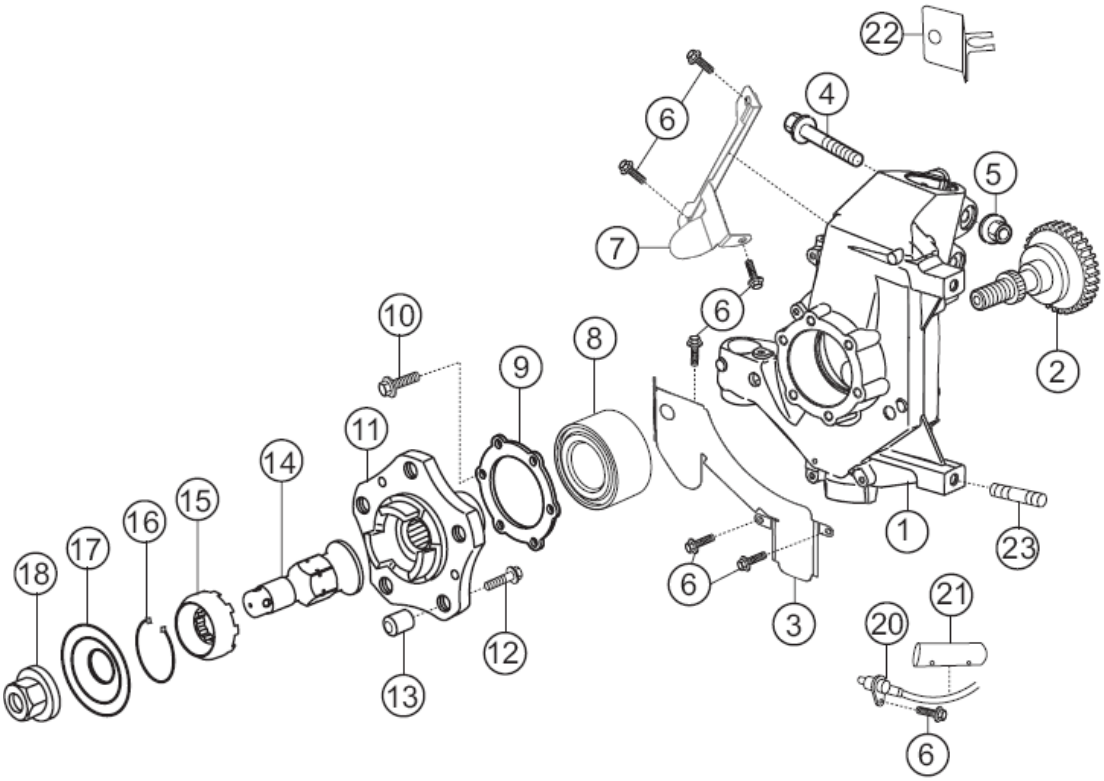

Position	Dimension	Tightening torque [Nm]
2	Copper paste thin on: Thread, gearing, flange face	
5	M12	75, **must not be exceeded**
6	M6 x 16 8.8	10
10	M8 x 35 10.9	37
11	Grease hub with Longtime grease before pressing in	
12	M8 x 30	37 with Loctite 270
14		see 7.1.1, copper paste on contact surface
18		see 7.1.1
23	Replace after dismantling → micro capsulated	

Downloaded from www.Manualslib.com manuals search engine

6.6.3. Front anti-roll bar

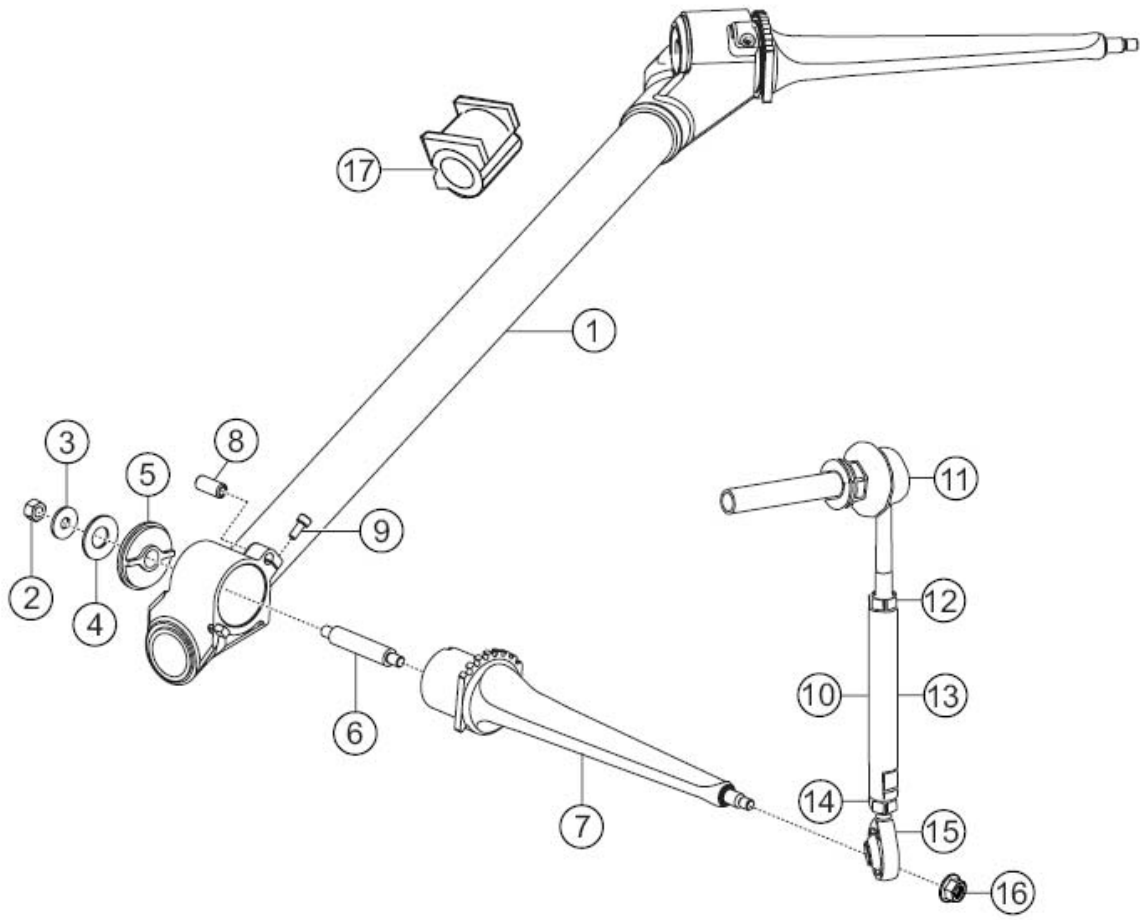

Position	Dimension	Tightening torque [Nm]
2	M6	10
11	M10	75
12	M8 LH	23
14	M8	23
16	M6	10

Downloaded from www.Manualslib.com manuals search engine

6.6.4. Front strut

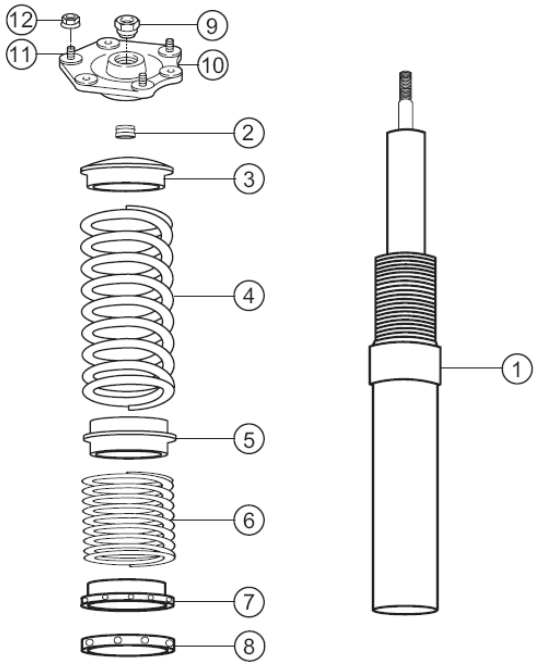

Position	Dimension	Tightening torque [Nm]
9	Sleeved nut	75
12	Flanged nut M8	33

6.6.5. Steering rack

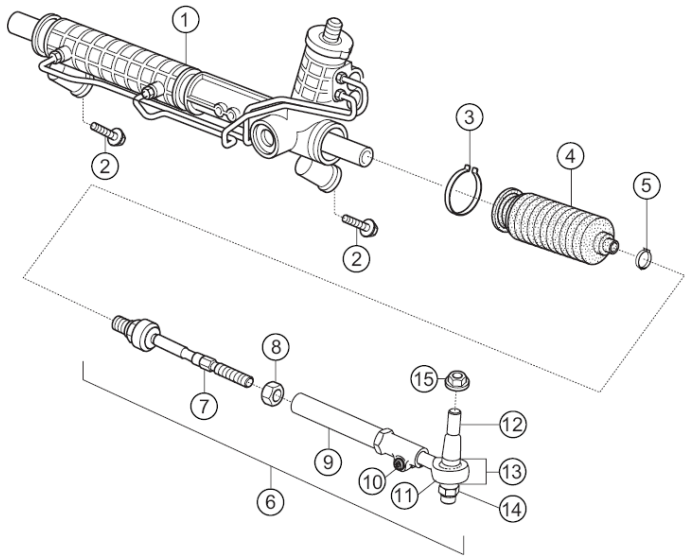

Position	Dimension	Tightening torque [Nm]
2	M10 x 45 10.9	70
8	M14 x 1.5	50
10	M6 x 20	10
15	M12 x 1.5 10.9	75 (replace after dismantling)

Downloaded from www.Manualslib.com manuals search engine

6.6.6. Steering column

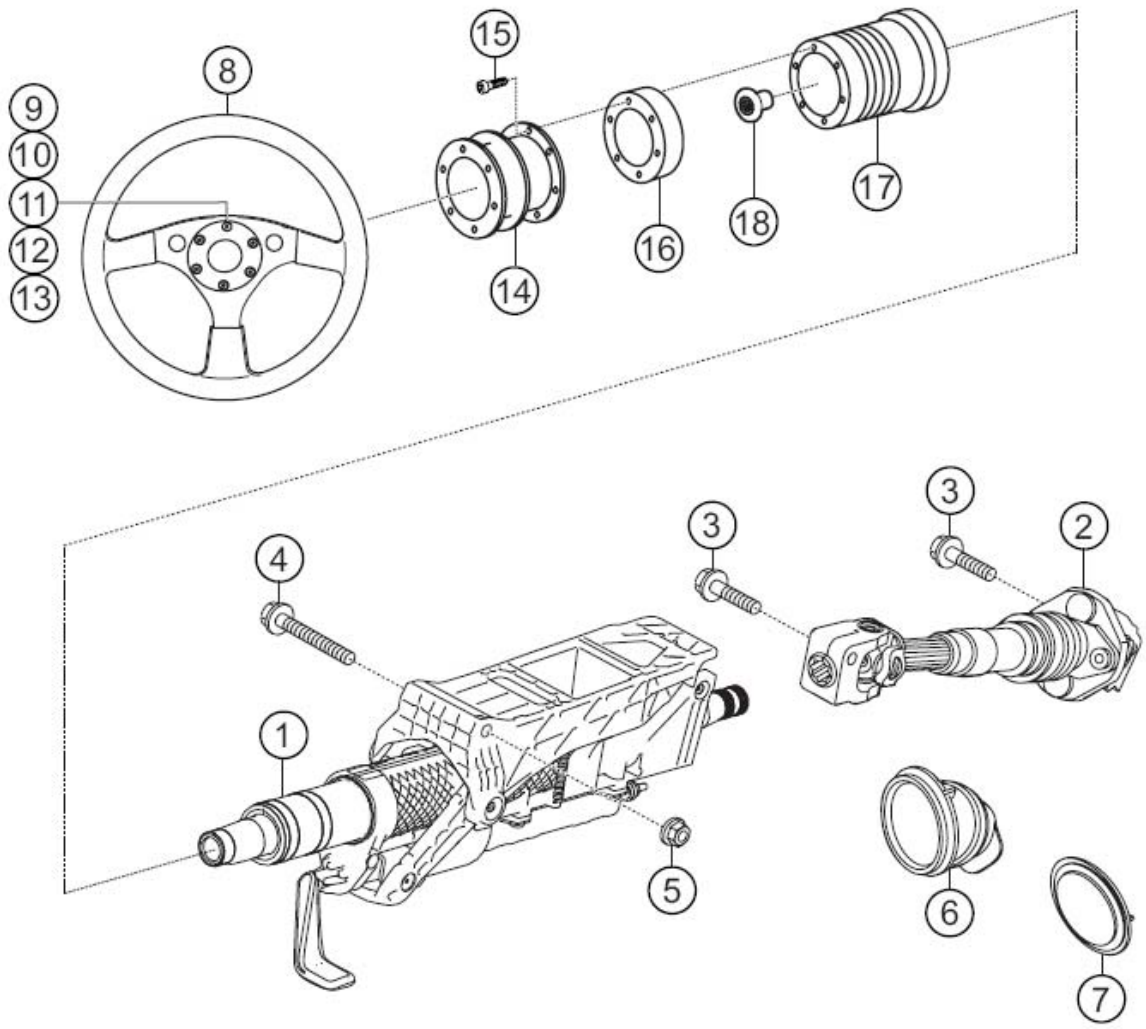

Position	Dimension	Tightening torque [Nm]
3	M8 x 35 10.9	23
5	M10	46
11	M5	6
15	M5 x 35	5
18	M16 x 1.5	50 + 5

Downloaded from www.Manualslib.com manuals search engine

6.6.7. Rear axle side part

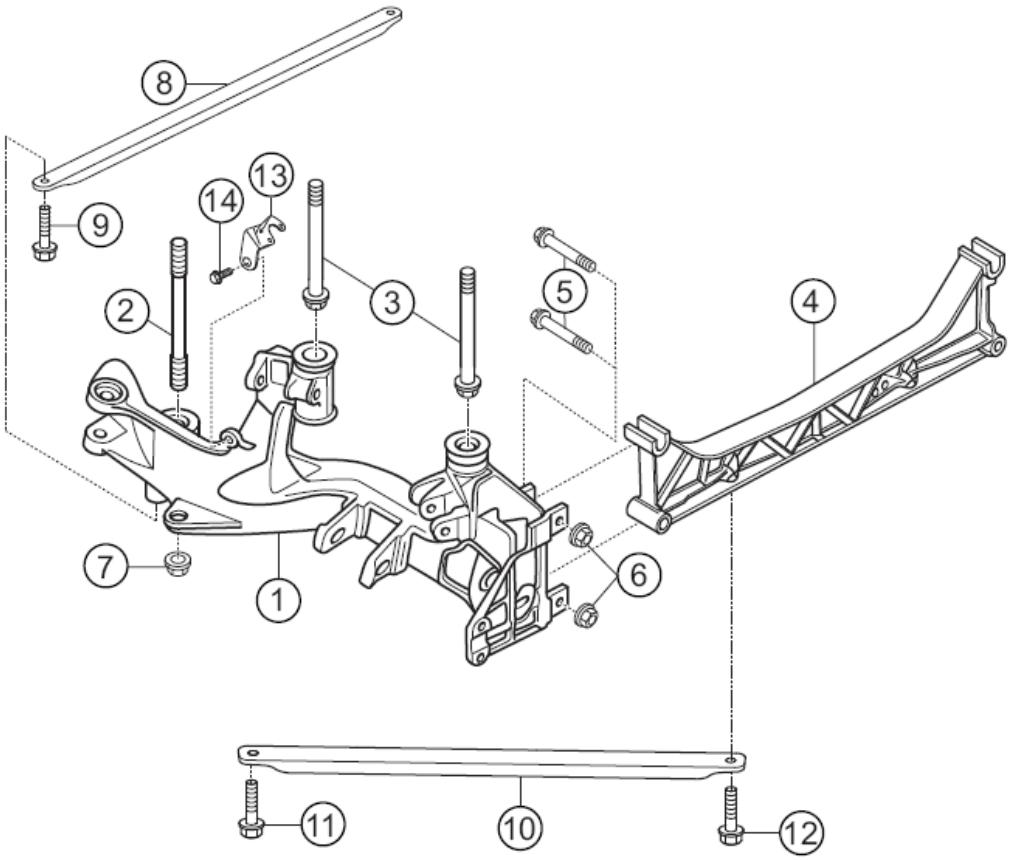

Position	Dimension	Tightening torque [Nm]
2	M12 x 97	65
3	M12 x 1.5 x 130	110
5	M12 x 80	110
6	M12 x 1.5	110
7	M12 x 1.5 10.9	110
9	M10 x 45	65
11	M12 x 40	65
12	M12 x 30 10.9	110
14	M6 x 16	10

Downloaded from www.Manualslib.com manuals search engine

6.6.8. Rear axle

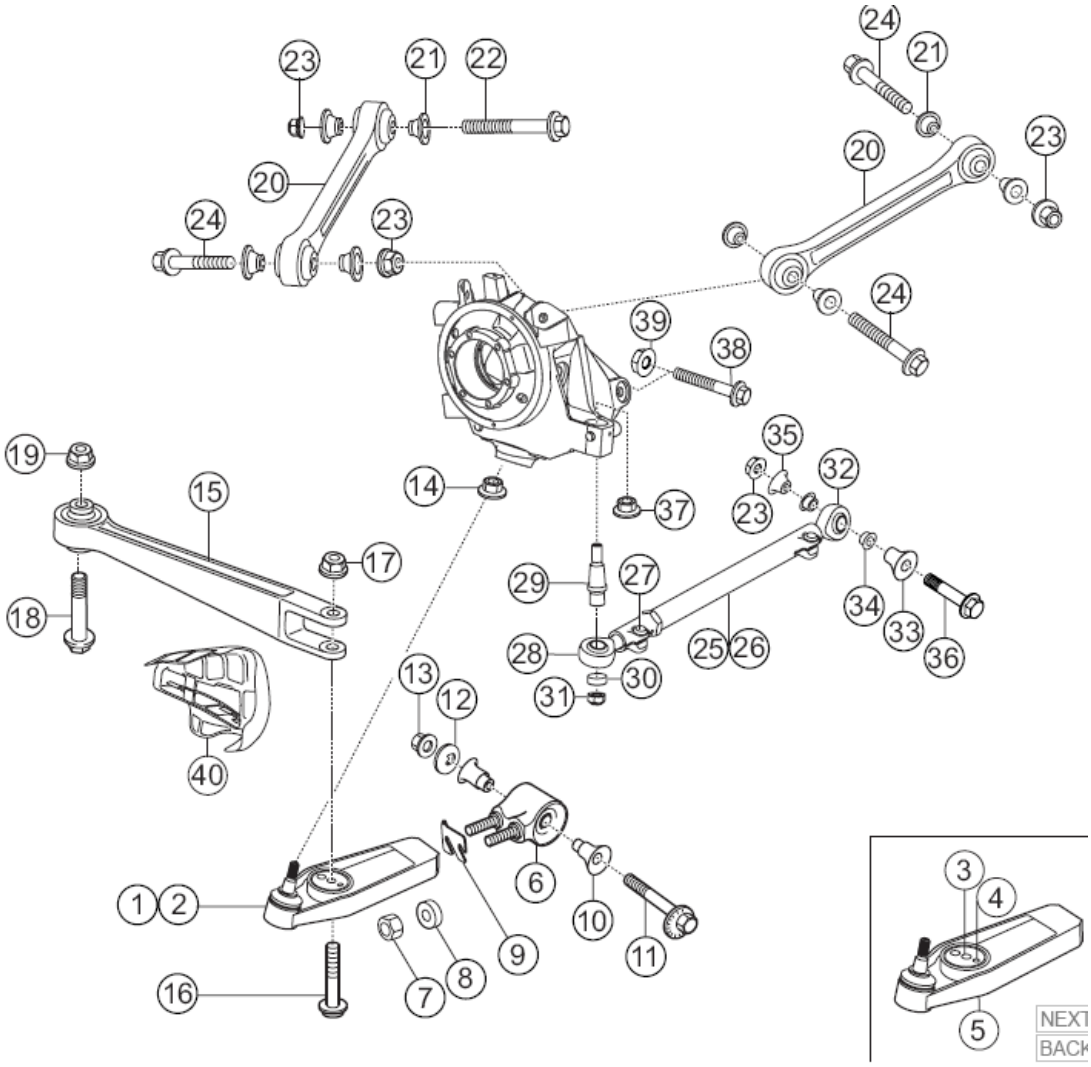

Position	Dimension	Tightening torque [Nm]
5	M5	8
7	M8	25
13	M12	100
14	M12 x 1.5	75 (replace after dismantling)
17	M14 x 1.5	160
19	M14 x 1.5	180
23	M12 x 1.5	110
27	M6 x 20	10
31	M14 x 1.5	75
37	M12	75 (replace after dismantling)
39	M12	75

Downloaded from www.Manualslib.com manuals search engine

6.6.9. Rear upright

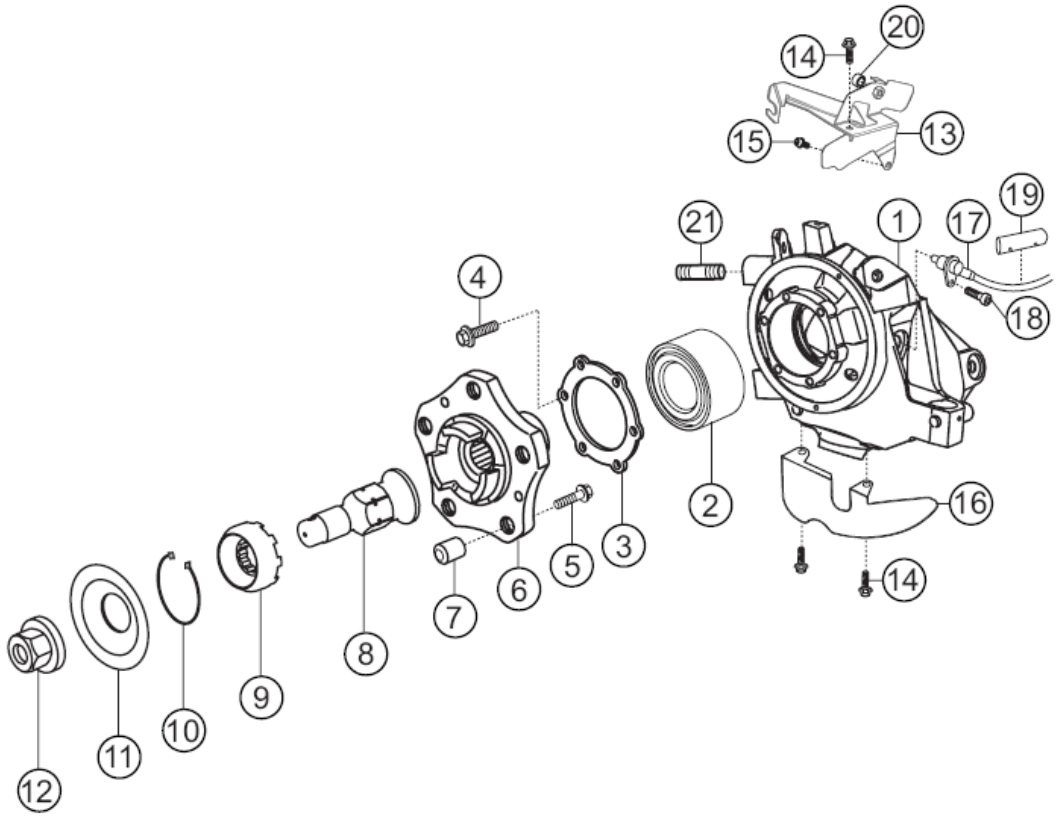

Position	Dimension	Tightening torque [Nm]
4	M8 x 35	37
5	M8 x 30	37 with Loctite 270
6	Grease hub with Longtime grease before pressing in	
8		see 7.1.1, copper paste on contact surface
12		see 7.1.1
14	M6 x 16	10
15	M6 x 12	10
18	M6 x 16	10
21	Replace after dismantling → micro capsulated	

Downloaded from www.Manualslib.com manuals search engine

6.6.10. Rear anti-roll bar

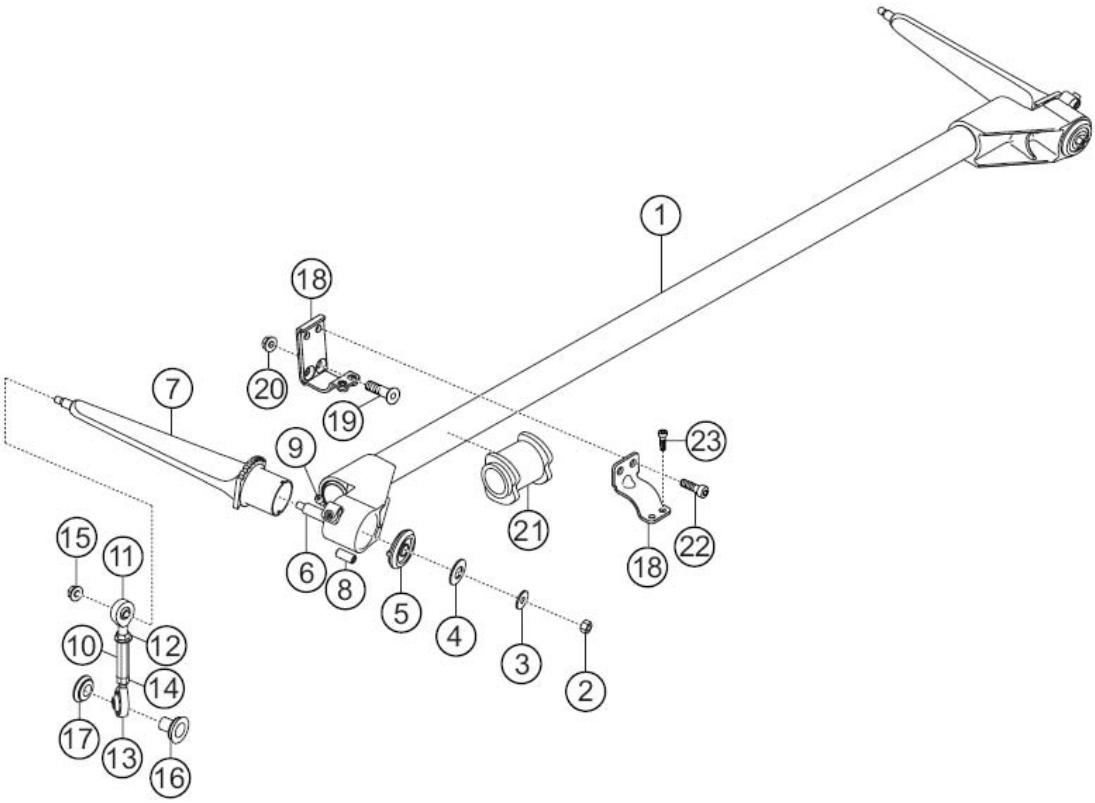

Position	Dimension	Tightening torque [Nm]
2	M6	10
9	M4 x 10	2
12	M8 LH	25
14	M12	46
15	M6	10
20	M8	25
22	M8 x 25	25
23	M6 x 12	10

Downloaded from www.Manualslib.com manuals search engine

6.6.11. Rear strut

Position	Dimension	Tightening torque [Nm]
3 upper	M12 x 1	35
3 lower	M12 x 1	40
15	M10	46

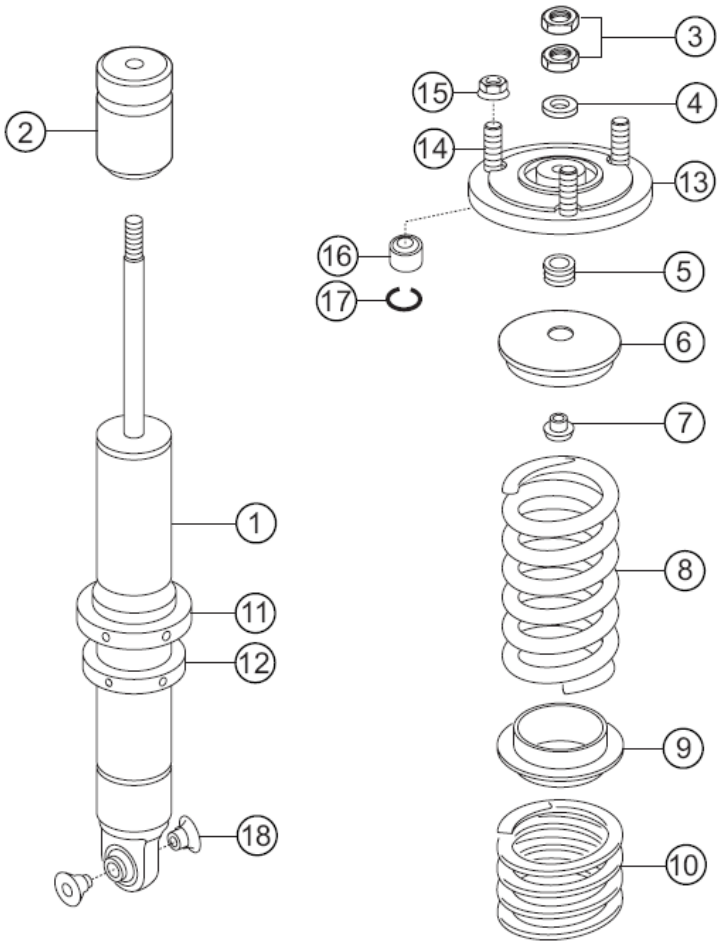

Downloaded from www.Manualslib.com manuals search engine

6.7. Sachs damper service information

Service partners for Germany:

ZF Sachs Race Engineering GmbH
Ernst-Sachs-Straße 62
97424 Schweinfurt
Phone +49 9721 983258
Fax: +49 9721 984299

Gallade Technologiezentrum am Nürburgring
Rudolf-Diesel-Straße 11 – 13
53520 Meuspath
Phone +49 2691 9338-54
Fax +49 2691 9338-50

Service partner for the UK:

BG Motorsports Ltd
47 – 48 Silverstone Circuit
Silverstone, Northants NN12 8TN
Phone +44 1327 855200
Fax +44 1327 855201

Service partners for the USA:

ZF Sachs Race Engineering NA
15811 Centennial Drive
Northville, MI. 48168
Phone +1 734 416 6200
Fax +1 734 416 1948

Downloaded from www.Manualslib.com manuals search engine

Oceanshore Motorsports
David Glenn
5892 John Anderson Highway
32136 Flagler Beach, FL
Phone +1 386 6731936
Fax +1 386 6731184

Service partner for Asia:

Enable Inc. Technical center
1 – 36 Ootsuzaki Ogakie-cho
Kariya-shi, Aichi-ken, 448-0813
Japan
Phone +81 566 62 86 05
Fax +81 566 62 86 07

Downloaded from www.Manualslib.com manuals search engine

7. Wheels

The following three-piece wheels are supplied with the car:

Front axle:	BBS 9.5 x 18" offset 37 mm
	Tyre dimensions: 24/64-18 (rain tire)
Rear axle:	BBS 12 x 18" offset 30 mm
	Tyre dimensions: 30/68-18 (rain tire)

7.1.1. Centre lock wheel nut

The centre lock wheel nuts for the 2012 model are identical to those of the 911 GT3 Cup S 2009.

7.1.1.1. Centre lock wheel nut maintenance instruction

Note: Porsche Motorsport strongly recommends that the wheels are cleaned and a comprehensive visual inspection is carried out after every practice session or race.

Check for cracks on both the inner and outer faces of the spokes, damage to the centre lock mating face and deformation to the wheel well and the fasteners. Careful attention should be paid to the mileage of the wheels. Use the collected data to ensure that wheels are used in rotation, therefore ensuring a balanced and even usage and helping to identify early the need for spares.

- Wheel nut tightening torque **460 + 10 Nm**
- The centre bolt and wheel nut must be cleaned regularly
- After cleaning the wheel nuts the thread and mounting flange should be coated thinly with grease
- When fitting new or used centre bolts the mounting face and internal threads should be coated thinly with grease
- Centre bolt tightening torque **490 Nm**

Downloaded from www.Manualslib.com manuals search engine

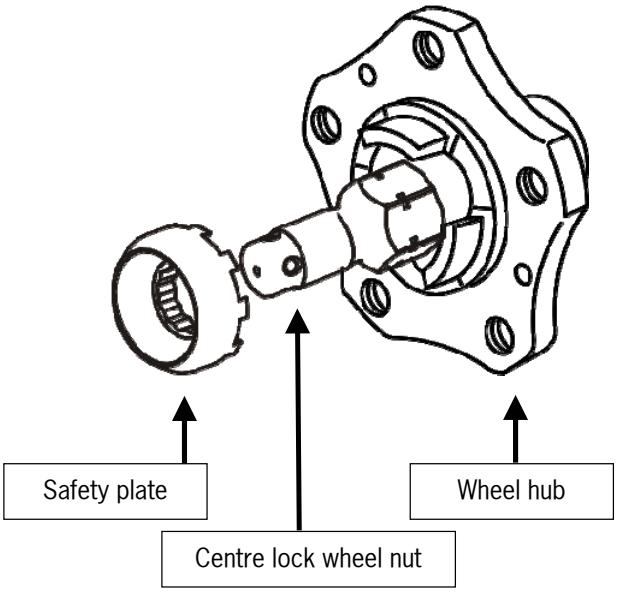

- Slide safety plate on centre lock wheel nut, in case the safety plate lugs do not grasp the hollows in the hub remove safety plate and slide it back on the nut in a different position (turn the safety plate counter- or clockwise) by doing this check if the safety plate lugs grasp the hollows in the hub, if the lugs do not grasp the hollows in the hub identify the position of the safety plate which requires the least retightening of the centre lock wheel nut
- Only use Optimoly HT–Paste (copper paste) when lubricating the area of the centre lock

7.1.1.2. Centre lock special tools

Wrench socket wheel nut:	996.721.573.9A
Wrench socket centre lock wheel nut:	996.721.571.9A

Downloaded from www.Manualslib.com manuals search engine

8. Brake system

The GT3 Cup is fitted with a dual circuit brake system incorporating two separate brake master cylinders. The front to rear brake balance ratio is set by rotating the brake balance knob.

8.1. Technical data brake system (steel)

	Front axle	Rear axle
Master cylinder	AP CP2623	AP CP2623
Master cylinder diameter [mm]	20.6	19.1
Brake disk diameter [mm]	380	350
Brake disk thickness [mm]	32	28
Brake pad	Pagid P50	Pagid P50
Pad thickness [mm]	18	18
Brake caliper	6 piston aluminium monobloc	4 piston aluminium monobloc
Brake caliper piston diameter [mm]	28 / 30 / 32	34
Brake fluid	Endless RF - 650 Racing Super Fluid	

8.2. Technical data brake system (PCCB)

	Front axle	Rear axle
Master cylinder	AP CP2623	AP CP2623
Master cylinder diameter [mm]	20.6	17.8
Brake disk diameter [mm]	380	350
Brake disk thickness [mm]	34	28
Brake pad	Pagid P50 PCCB	Pagid P50 PCCB
Pad thickness [mm]	18	18
Brake caliper	6 piston aluminium monobloc	4 piston aluminium monobloc
Brake caliper piston diameter [mm]	28 / 30 / 32	34
Brake fluid	Endless RF - 650 Racing Super Fluid	

Downloaded from www.Manualslib.com manuals search engine

8.3. Brake force distribution (brake balance)

The brake balance adjustment is made via a balance-bar system. The brake balance is adjusted by a potentiometer on the instrument panel.

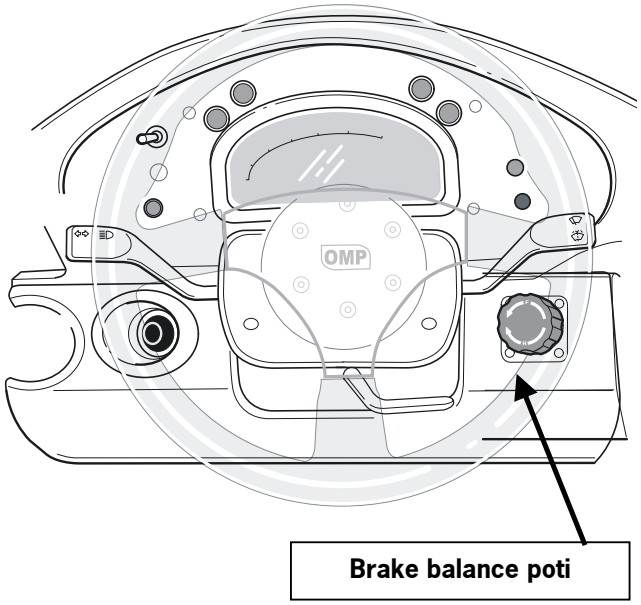

Rotating the brake balance adjuster knob in the "**-**" direction increases the brake pressure on the rear axle in comparison to the front. In the "**+**" direction vice versa.

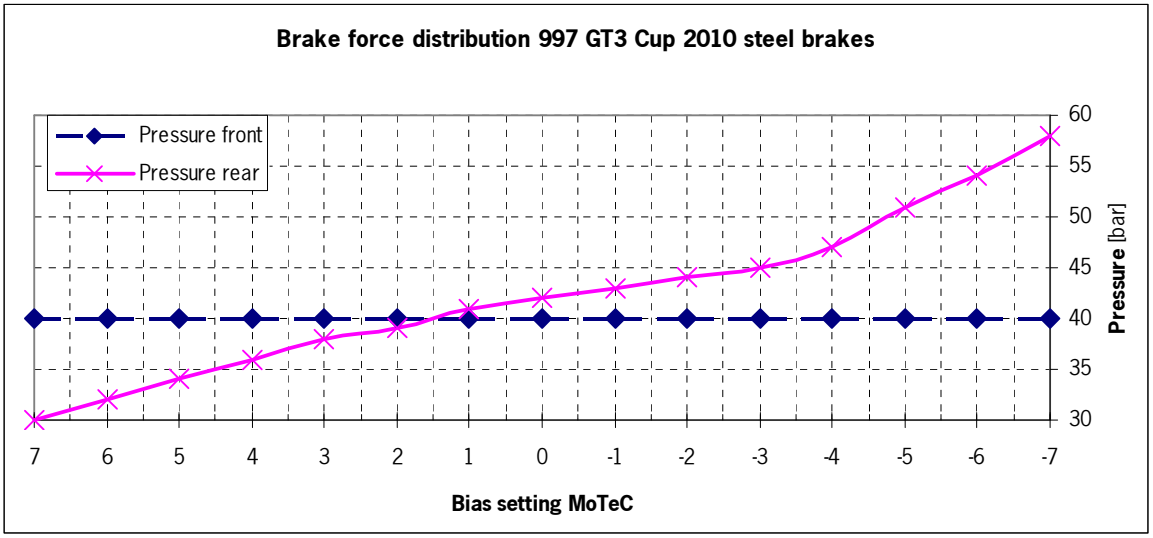

Downloaded from www.Manualslib.com manuals search engine

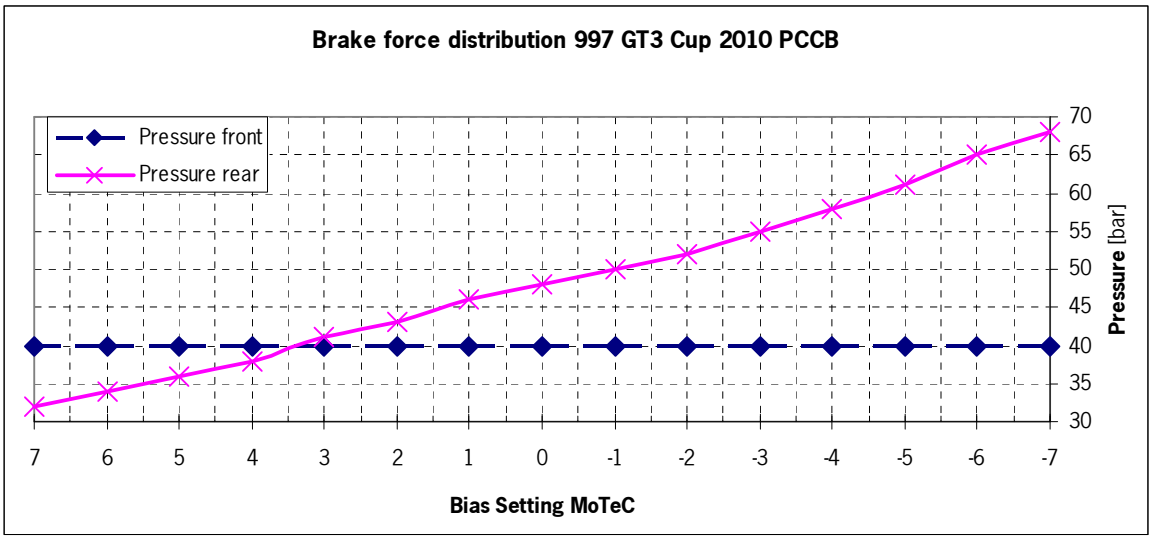

8.3.1. Brake balance system

If the brake balance potentiometer is rotated the lever ratio (dimension x) on the balance bar is adjusted directly by a adjuster cable

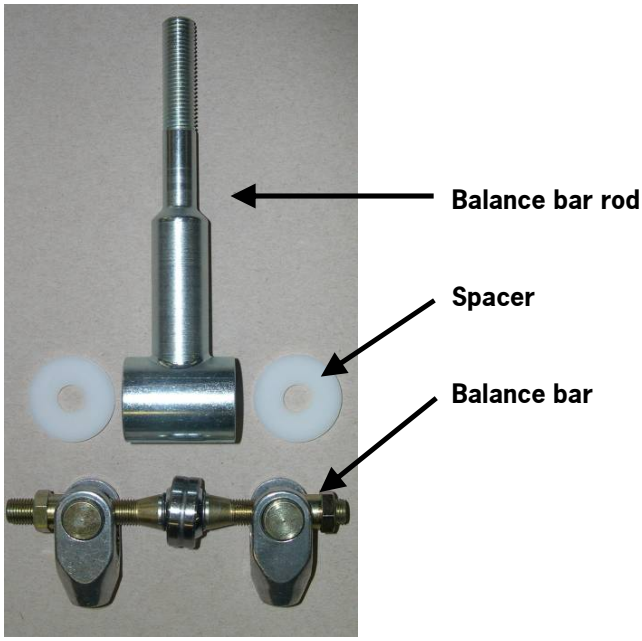

Downloaded from www.Manualslib.com manuals search engine

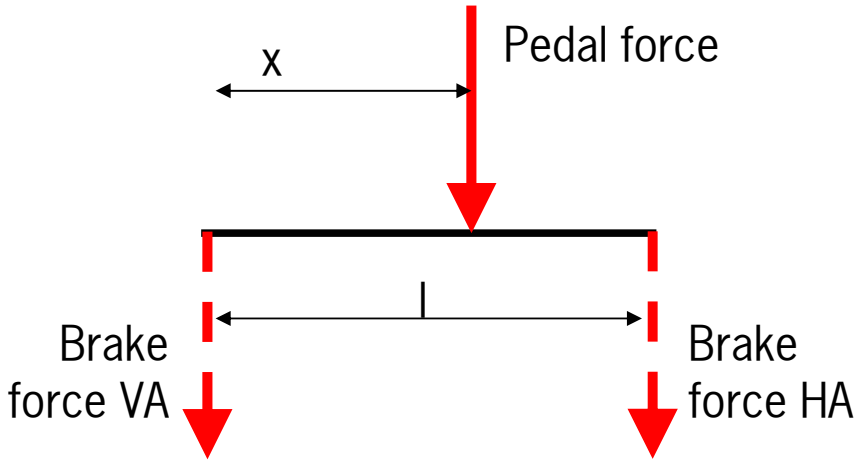

$$brakeforce_rear = \frac{pedalforce \bullet x}{l}$$

$$brakeforce_front = pedalforce - brakeforce_rear$$

8.3.1.1. Basic setting balance bar

The following dimensions must be set in the basic setting (0).

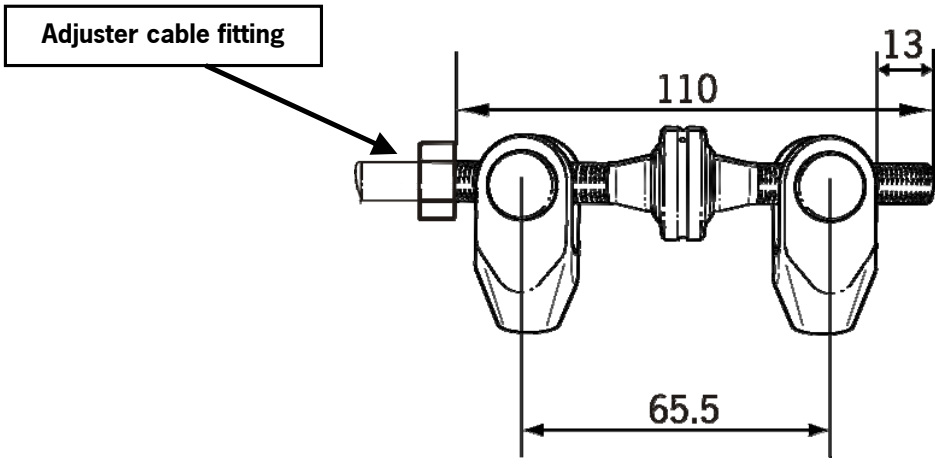

Downloaded from www.Manualslib.com manuals search engine

In addition one has to take care for sufficient axial play of the balance bar. Thererfore a play of

0.9 - 1.5 mm

between the plastic spacer and the fork end hast to be set. The adjustment of the play is performed by altering the difference between the two fork ends. **This play is absolutely necessary to prevent a twisted system. The lever ratios are not affected by this play.**

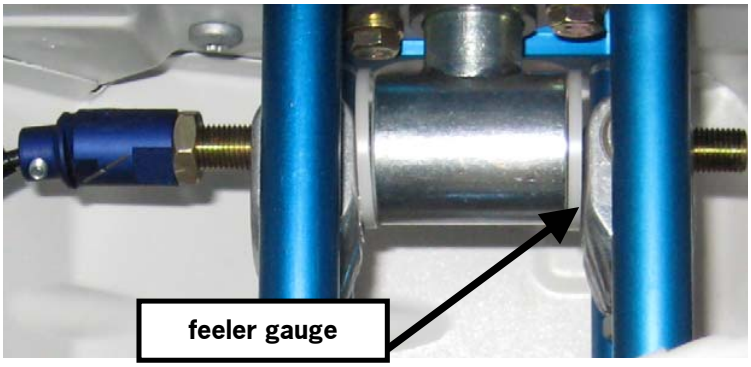

Furthermore, it is possible that the play changes when the balance bar system is mounted on the car. Therefore, the play has to be re-checked when the balance bar system is mounted on the car.

The pitch of the threaded balance bar rod is 1.2 i.e. when the fork end is turned a full revolution the fork end moves 1.2 mm.

Downloaded from www.Manualslib.com manuals search engine

In addition, it should also be noted that with the maximum positive rotation in the anti-clockwise direction (-7) there must be a 2 mm gap between the adjuster cable lock-nut and the front brake master cylinder pushrod clevis to prevent the clevis colliding with the lock-nut.

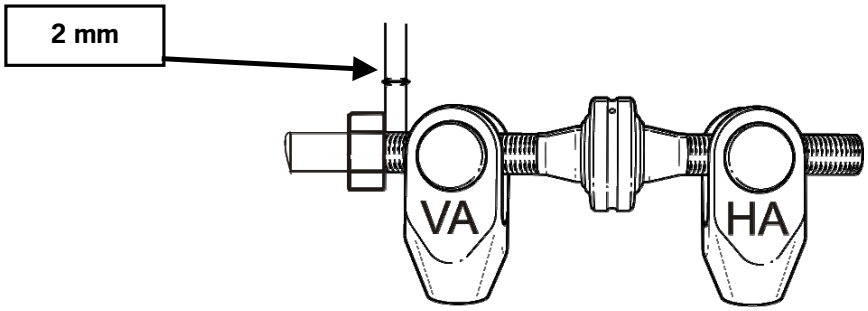

Under all circumstances avoid the system being fitted with preload. The pushrods of the two master cylinders must be aligned with the blue aluminium rod of the retaining frame.

The pushrod of the two master cylinders must be screwed into the clevis so that the thread is visible.

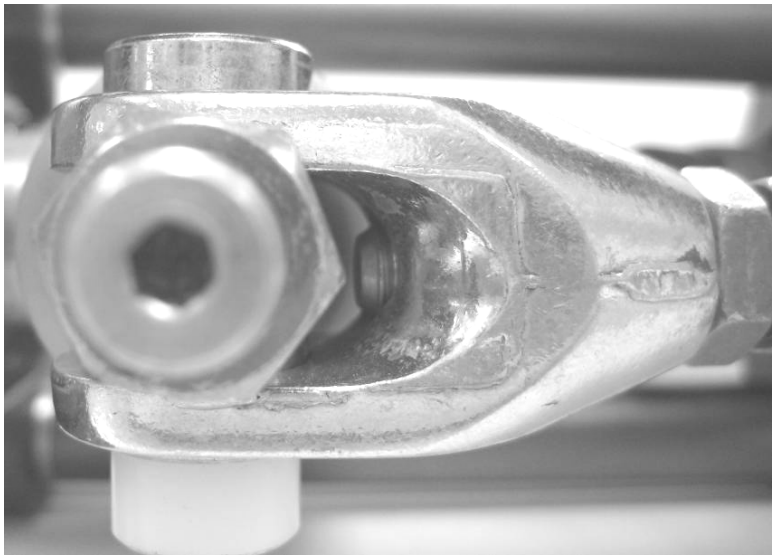

Downloaded from www.Manualslib.com manuals search engine

8.3.1.2. Brake balance potentiometer

- The brake force distribution is shown in the MoTeC–Display **(BBIAS)** in practice mode
- The adjustment range is from -7 to +7

Pay attention when changing potentiometer:

- The potentiometer is preset to "0"
- First remove the transport lock and only adjust the potentiometer when the complete set is fitted to the car and the shaft is mounted to the centralized balance bar
- When doing maintenance work on the balance bar it must be set in the centre position before mounting the adjustment shaft.
- Afterward set the potentiometer in the MoTeC display to "0"
- Do not rotate more than +7 and -7 on the display (the potentiometer does not have a rotation limit and would otherwise be damaged).
- Set unfitted potentiometers to "0" with the MoTeC system before fitting

8.3.1.3. Brake balance system maintenance

The brake balance system is comprised of many moving parts. In general all joints should be free of friction and no parts should be preloaded when fitted

The following parts in the system should be cleaned and re-greased regularly:

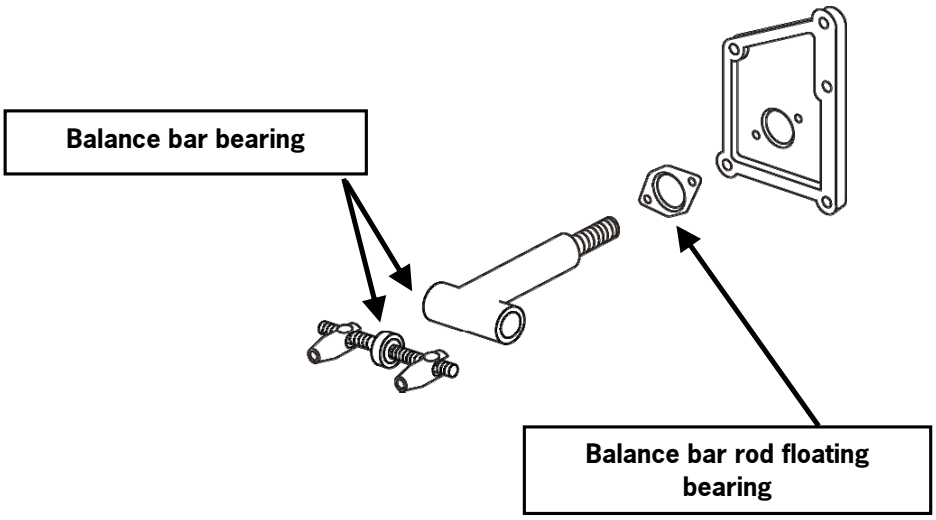

Porsche Motorsport recommends the used of Autol Top 2000 grease.

Downloaded from www.Manualslib.com manuals search engine

AP Racing provides a repair kit for the brake master cylinder

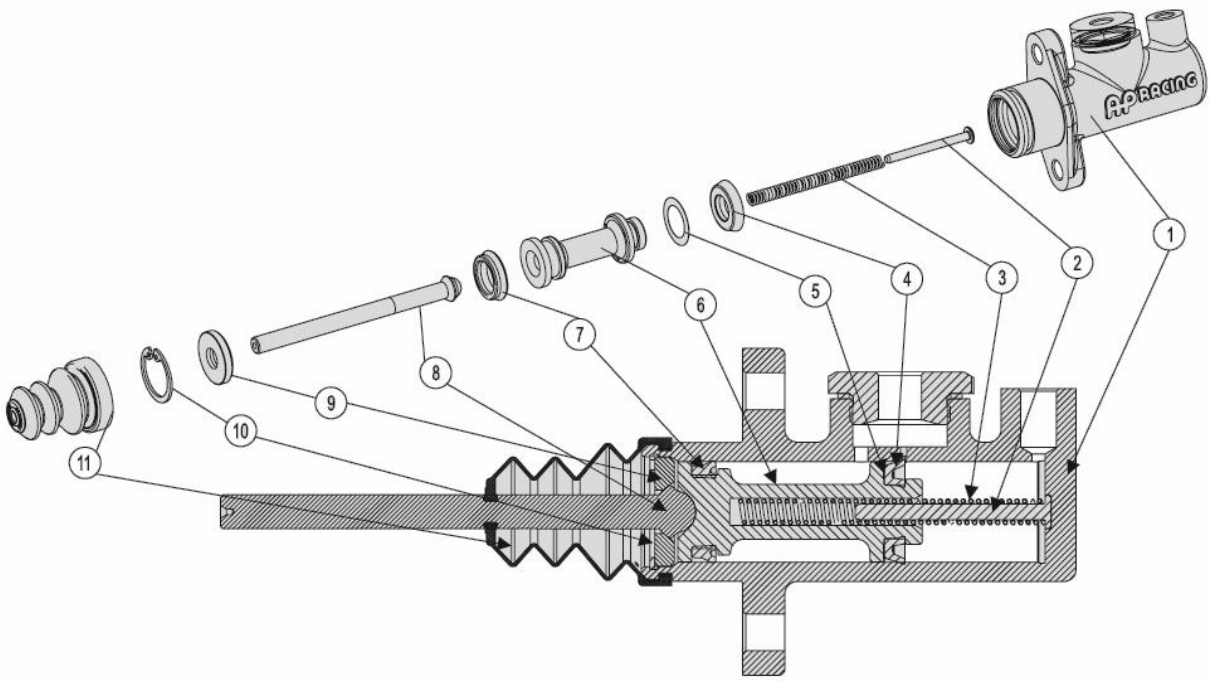

The repair kit includes the following parts:

4 – Main seal
5 – Piston shim
7 – Secondary seal
10 – Circlip
11 – Rubber boot

Repair kit installation:

1. Remove rubber boot -11- and circlip -1
2. Carefully remove the internal components
3. Remove dirt / deposit in the cylinder
4. Coat the cylinder with brake fluid
5. Replace the following parts when rebuilding the master cylinder: Main seal, piston shim, secondary seal, circlip, rubber boot. While replacing parts make sure that all seals are coated with brake fluid.

Downloaded from www.Manualslib.com manuals search engine

8.4. Brake caliper

The brake calipers fitted are of aluminium monobloc design. A 6-piston caliper is used on the rear axle and a 4-piston caliper on the rear.

The caliper pistons are fitted with dust boots. When working on the brake system, such as when changing brake pads, attention should be taken that there is no dirt on the pistons when they are pressed into the caliper body.

Porsche Motorsport provides a repair kit for brake calipers which includes new pistons and seals.

There are two bleed nipples on each brake caliper. If a pressure manometer is connected to the caliper it should be noted that the system including manometer is bled.

8.5. PCCB brake disk information

The PCCB brake discs require careful handling, they are very sensitive to mechanical influences such as, for example, knocks from the wheel when fitting tyres or damage which can occur when cleaning the ventilation holes with a drill bit.

Mechanically damaged brake disks must be replaced. The PCCB brake disc wear can only be assessed by weight loss, and not, however, by the reduction of the brake disc thickness. The wear indicators on the brake disc are not relevant for use when racing. Precision weighing scales are recommended to weight the brake discs. The weights should be documented together with mileage. To guarantee precise documentation of the brake discs the new weight of the brake discs and a sequential number are engraved on the disc bell.

The brake disc weight loss must not exceed 100 g from the new weight. If the weight loss exceeds 100 g the brake disc is worn out.

Downloaded from www.Manualslib.com manuals search engine

The brake discs must be free of brake dust, rubber particles and other dirt before weighing in order to make an accurate assessment of the wear. The brake discs must not be taken apart. The PCCB brake disc must be carefully bedded-in when new in order to achieve a long lifetime and high brake performance. A brake disc temperature of 250° C must not be exceeded. The brake disc surface aspect changes from matt to shiny after bedding-in. It should be noted that all four brake discs are bedded-in evenly on the car. To achieve even bedding-in slightly more brake force must be set to the rear axle.

8.6. Tightening torques brake system

Component	**Bolt dimension**	**Tightening torque** [Nm]
Bleading screw calliper		14 (cold calliper)
Calliper on wheel carrier		73
Brake disc to hub	M6 x 12	12 plus Loctite 243
Brake disc to disc bell	M6	10
Brake pipe bracket on subframe	M6 x 16	10
Threaded rod nut Mounting frame Balance bar	M8	15 plus Loctite
Banjo bolt master cylinder		25
Lock nut clevis brake balance bar	M10	10

Downloaded from www.Manualslib.com manuals search engine

9. Chassis

The 911 GT3 RS 2012 chassis forms the basis of the 997 GT3 Cup 2012 race car. The chassis is fitted with roll-cage for safety purposes.

The 911 GT3 Cup 2012 chassis has the following features:

- Wider bodyshell based on the second generation GT3 RS II
- Larger rear wheel arches (new wheel housings for 690 mm tyres)
- Aluminium boot lid with Naca duct for direct driver cooling
- Roll cage complying with DMSB guidelines
- Carbon fibre doors with frame and plastic mirrors
- Polycarbonate rear screen, front windscreen and side windows

DO NOT under any circumstances modify the roll-cage as its structural integrity will be compromised. DO NOT weld additional brackets, or drill holes in the tubes. If in doubt please contact Porsche Motorsport.

All unnecessary panels and sound proofing materials have been removed to reduce weight.

9.1. Interior

- Removable steering wheel, with length and height adjustable steering column
- Race bucket seat with fire resistant upholstery fabric (only driver side)
- 6-point safety harness

9.2. Exterior

Front body panels

- Modified component carried over from 911 GT3 second generation with daytime running lights
- Aerodynamically optimised bumper lip

Downloaded from www.Manualslib.com manuals search engine

Rear body panels

- Modified component carried over from 911 GT3 second generation (PUR-GF 17)
- No aluminium beam or impact bars
- Heat shielding

9.3. Rear wing

The 911 GT3 Cup 2012 is equipped with a 12-position adjustable carbon fibre rear wing.

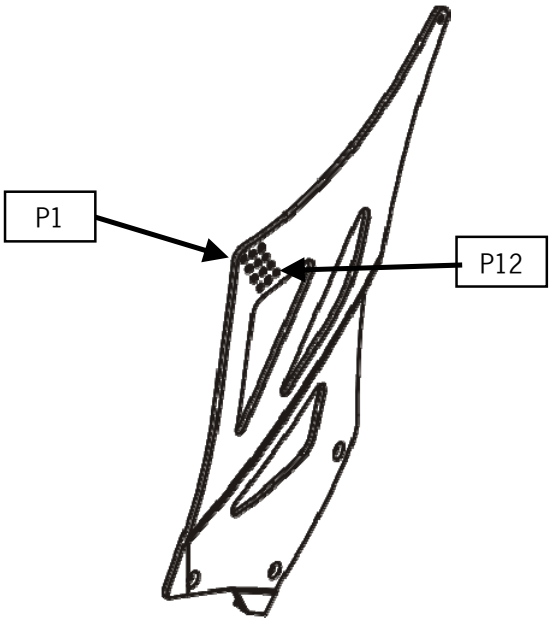

Left wing support

Downloaded from www.Manualslib.com manuals search engine

9.4. Fire extinguisher system

The car is equipped with an FIA homologated fire extinguishing system using AFFF as extinguishing agent. The extinguishant cylinder has two separate chambers each with a two kilogram capacity. The extinguishing agent is discharged through three nozzles located in the engine bay and a further three located within the cockpit.

The system operates between -15° C and +60°C. The extinguisher cylinder must be protected from frost (remove from vehicle).

The operating pressure of system is 14 bars, and should be checked regularly using the manometer mounted to the extinguisher bottle.

The extinguishing agent, extinguisher cylinder and flexible pipes should be replaced after a maximum of 2 years from the date of manufacture by original spare parts.

9.4.1. Fire extinguisher activation

The extinguisher system is live when the toggle switch on the trigger box is set in the “System Active” position. The extinguisher is discharged by pressing the dash mounted push button and/or the push button in the windshield apron.

Downloaded from www.Manualslib.com manuals search engine

9.4.2. Extinguisher system error analysis

Battery check:

- Hold the toggle switch on the trigger box in the "Battery Check" position
- If the battery charge state is good the trigger box warning lamp will blink

Warning lamp does not glow:

- Check battery charge state (refer to 'Battery Installation')
- Check the cable connection to the firing buttons (refer to 'Trigger box wiring harness')
- Check fire button function

Battery installation:

Attention: The toggle switch on the trigger box must be set in the 'System Inactive' position.

- Remove the trigger box cover and change the battery. Ensure that the battery poles are connected correctly. Only Alkaline batteries should be used.

Checking the firing button:

Attention: The toggle switch on the trigger box must be set in the 'System Inactive' position.

- Throw the toggle switch in the luggage compartment
- If the switch is functioning correctly the trigger box warning lamp will glow
- Return the switch to the original position
- Press the dashboard mounted push button
- If the switch is functioning correctly the trigger box warning lamp will glow

Trigger box connection:

The firing button '1' is connected to the terminals '3' and '4', firing button '2' with the terminals '5' and '6'.

Incorrectly connected cables accidentally can fire the extinguisher system.

Downloaded from www.Manualslib.com manuals search engine

9.5. Air-jack system

- The exhaust valve must always be open (pulled out) to ensure that the air-jack cylinders are completely retracted when the car is running
- Never work under the car when the car is raised on the air-jack system without the air-jacks being blocked with 'safeties'
- To prevent damage to the air-cylinder end stops never operate the system without the full weight of the car as resistance.
- To let down the car slowly a service valve is mounted to the rear right air-jack.
- **Max pressure. Operating pressure approximately 35-38 bar**
- Never use mineral oil based cleaning agents
- Never open the air jacks: There is residual pressure in the system even when jacks are retracted!
- Porsche Motorsport recommends that the system is overhauled after 2000 lifts or two years
- The torque setting for the grooved nut (air-jack fixed mount) must be checked during the standard maintenance procedure

  Torque setting grooved nut rear 45 ± 5 Nm

  Torque setting grooved nut front 45 ± 5 Nm

  See picture below for position of rear air-jack in the mounting tube

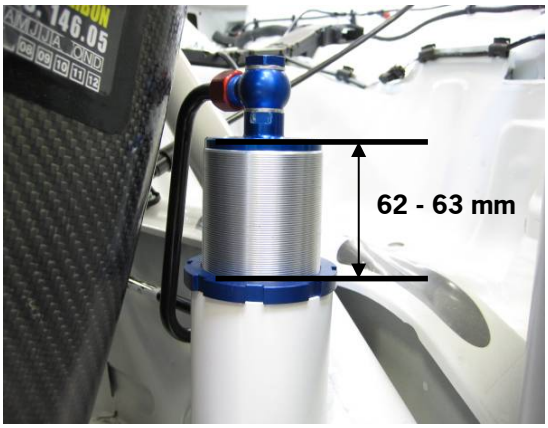

Downloaded from www.Manualslib.com manuals search engine

- If a loose or incorrectly tightened air-jack is discovered this must be changed immediately
- Please refer to the manufacturer's product description (Krontec) for further safety measures

KRONTEC
Maschinenbau GmbH
Pommernstraße 33
D - 93073 Neutraubling
www.krontec.de

The two rear air-jack cylinders are carried over from the 2009 model. The front air-jack cylinder is replaced by an air-jack with less stroke (185 mm) compared to the 2009 model year.

Front air-jack: KRONTEC LL 32 - 185
Rear air-jack: KRONTEC LL 22 - POR

9.5.1. Car lift system

Never use a third party product as this can lead to damage to the air-jack cover or piston tube.

Downloaded from www.Manualslib.com manuals search engine

10. Electric

10.1. Alternator

- 90 A

10.2. Battery

- 12 V, 50 Ah

10.3. Steering wheel

- Quick-release race steering wheel
- **The two parts of the release coupling are balanced together and therefore have to be used in only one combination (numbers on steering wheel and hub must match)**

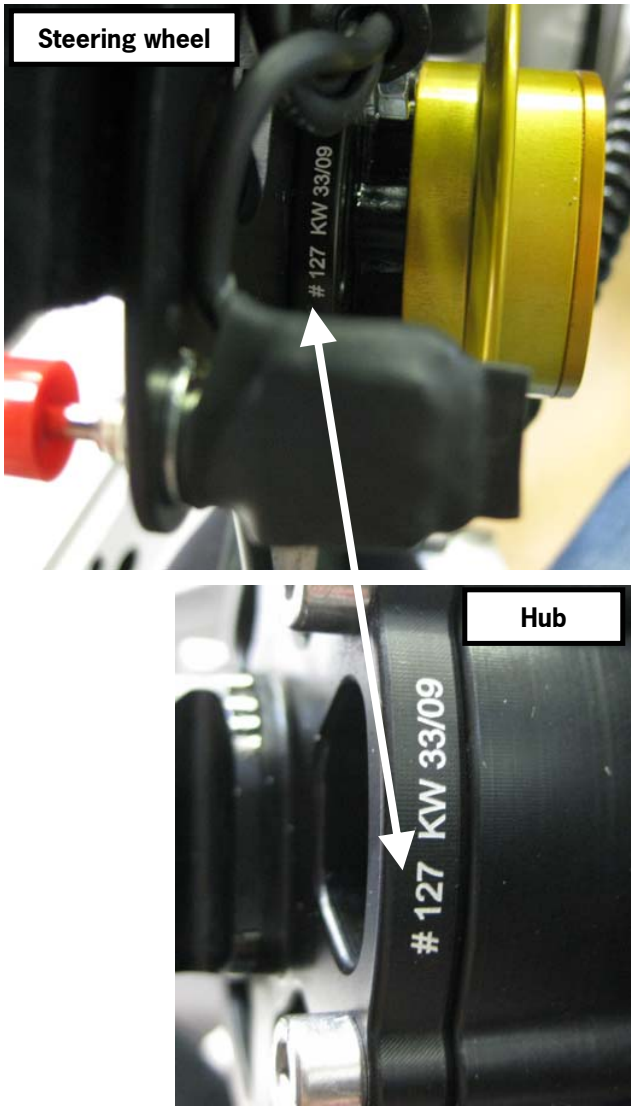

Downloaded from www.Manualslib.com manuals search engine

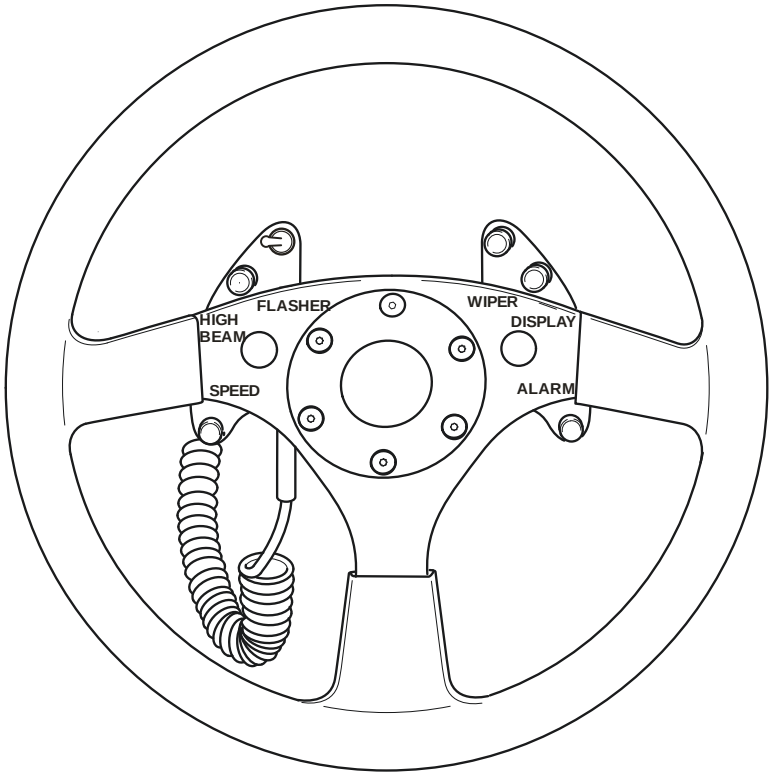

SPEED:	Speed limiter, for the speed limiter to function correctly Porsche Motorsport recommends that the car is driven in first gear at full-throttle with the speed limiter activated
HIGHBEAM:	Headlight flash, if the button is pressed for about 1 second the headlights stay on till the next time the button is pressed
ALARM:	Reset MoTeC alarm
DISPLAY:	Scroll through MoTeC display pages
FLASHER	Indicator
WIPER	Windscreen wiper

Downloaded from www.Manualslib.com manuals search engine

10.4. Centre console

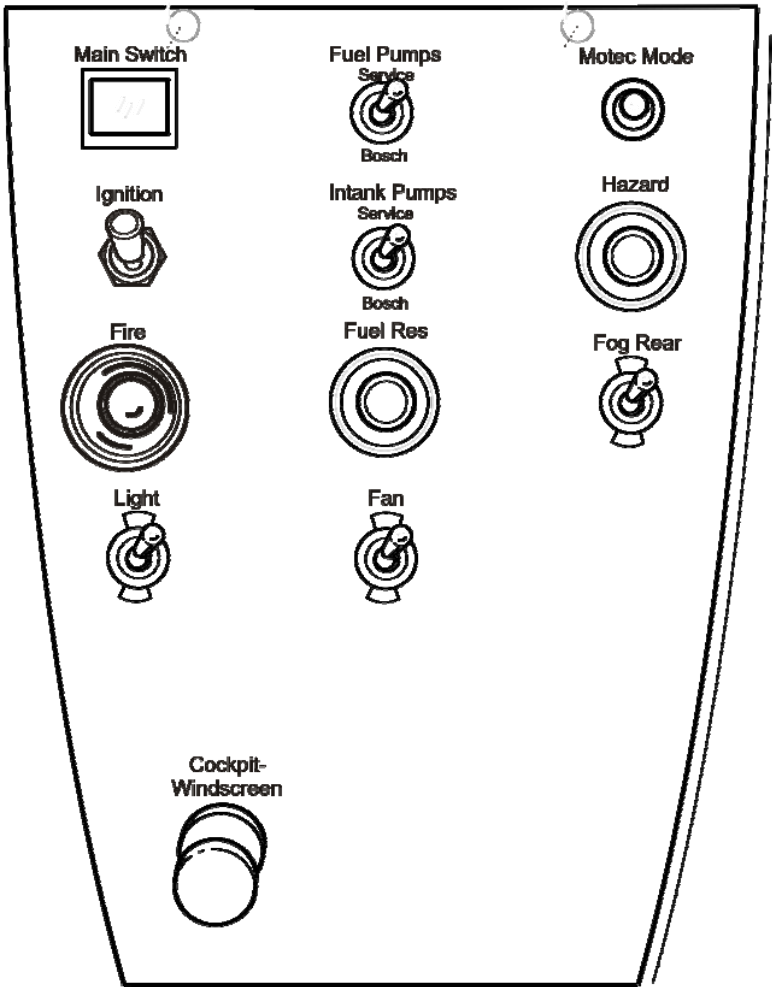

IGNITION:	Ignition
FIRE:	Fire extinguisher system
LIGHT:	Headlights
Motec Mode:	Page through the individual MoTeC display modes
MAIN SWITCH:	Main power supply
FAN:	Driver cooling (on or off)
FOG REAR:	Fog lights
HAZARD	Hazard lights
WINDSCREEN	Pulled: 100% windscreen Pushed: floor, air vents, driver ventilation

Downloaded from www.Manualslib.com manuals search engine

FUEL PUMP:	Main fuel pump Bosch: Pump runs when engine runs Middle position: Fuel pumps off Service: Pumps run with ignition (only to drain fuel cell)
INTANK PUMPS	Intank fuel pumps Bosch: Pumps run when engine runs Middle position: Fuel pumps off Service: Pumps run with ignition (only to drain fuel cell)
FUEL RES	Reserve fuel pump switch

10.5. Shift Light Module

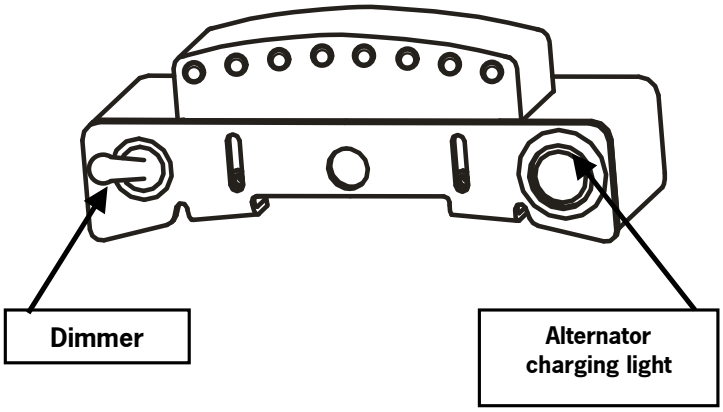

A Shift Light Module (SLM) is located above the MoTeC dash. This is used as additional display. The following display options are preset:

Downloaded from www.Manualslib.com manuals search engine

10.6. MoTeC Dash

The MoTeC Dash fitted has a 1 MB memory. This has a recording capacity of approximately 30 minutes.

The Cup MoTeC system is sold exclusively worldwide by Brückle–Motorsport. If information and/or a system is required please contact Brückle–Motorsport directly.

Brückle-Motorsport
Consulting GmbH
Werner Brückle
Bullreuth 1
D 82544 Egling
Tel. +49 89 72308198
Fax +49 89 72308199
Email: werner.brueckle@t-online.de

10.6.1. Display modes

The MoTeC Dash has three different display modes

- **Race**
- **Warm up**
- **Practice**

The information displayed differs between each mode. The MoTeC Mode switch in the centre console is used to page through the individual modes.

Downloaded from www.Manualslib.com manuals search engine

10.6.1.1. Race mode

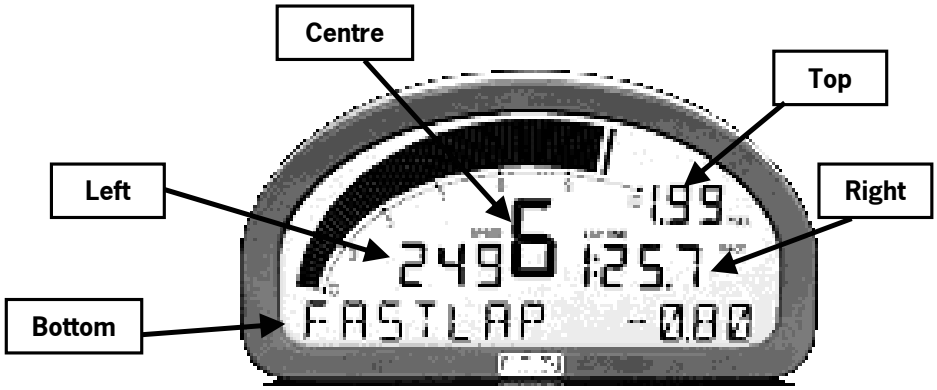

The lower (bottom) display line can be changed via the steering wheel mounted 'Display' switch.

Left:	Speed	
	Brake balance	
Centre:	Gear	
Top:	Fuel level	
	Fuel pressure	
Right:	Actual lap time	
	Previous lap-time	
Bottom:	Engine temperature	**ET**
	Oil temperature	**OT**
	Oil pressure	**OP**
	Fuel pressure	**FP**
	Gearbox oil temperature	**GBOT**
	Fuel consumption per lap	**FL**
	Total fuel consumption	**FU**
	Fuel level	**FLEVEL**
	Brake balance	**BBIAS**

Downloaded from www.Manualslib.com manuals search engine

10.6.1.2. Practice mode

Left:	Speed	
Centre:	Gear	
Top:	Fuel pressure	
Right:	Previous lap-time	
Bottom:	Brake balance	**BBIAS**
	Engine temperature	**ET**
	Engine oil temperature	**OT**
	Engine oil pressure	**OP**
	Fuel pressure	**FP**
	Battery voltage on dash	**VOLTS**
	Remaining logging time	**LOGTREM**

10.6.1.3. Warm up mode

Left:	Engine temperature	
Centre:	Condition throttle reset	
Top:	Battery voltage on dash	
Right:	Throttle angle Bosch	
Bottom:	Fuel pressure	**FP**
	Oil pressure	**OP**
	Engine oil temperature	**OT**
	Throttle position %	**THR%**
	Throttle position Bosch	**THR_BO**
	Battery voltage on dash	**BATVD**
	Gearbox poti voltage	**GEARSEN**
	Gear shift sensor voltage	**GEARF**
	Distance covered	**TRIPD**
	Odometer	**ODO**

There is no gear position indicator in Warm up mode.

Downloaded from www.Manualslib.com manuals search engine

10.6.2. MoTeC Dash configuration

The existing configuration can be modified with the software 'ADL2 Dash Manager'. The following version is required:

DM2_450Y4_p

Communication PC - MoTeC Dash only function with this version. Delivered with the car is a CD with the programme and the configuration used.

Under NO circumstances should the USB connection cable PC - MoTeC Dash be removed or the power supply cut during the up or downloading of configurations and/or measurement data.

Specific areas of the Dashboard are password protected and cannot be changed.

For example, the CAN communication between ECU and MoTeC Dash cannot be changed.

The MoTeC Dash is disabled if an incorrect password is entered. It can only be enabled by Porsche Motorsport.

Downloaded from www.Manualslib.com manuals search engine

10.6.3. MoTeC Interpreter

To analyse measurement data the software **MoTeC I2 Standard** Is required (is supplied with the car).

10.7. Car sensors

The car is equipped with the following sensors when delivered:

Measured variable	Description in MoTeC I2	Description in Bosch Modas
Engine		
Oil temperature	Oil Temp	toel
Water temperature	Water Temp	tmot
Oil pressure	Oil Pressure	poel
Water pressure	Eng Coolant Pres	pxb_w
Fuel pressure	Fuel Pres	pfuel
Throttle angle	Throttle	wdkba_w
Ambient pressure	Air Pressure - Airbox	pu
Ambient temperature	Air Temp - Intake	tans
Crankcase pressure (relative)	–	pcrank_rel
Phase sensor camshaft	–	phspos_w
Speed sensor flywheel	RPM	nmot_w
Cooling water level switch	Water Level Switch	–
Gearbox		
Gear shift force sensor gear lever	Gear Lever Force Volts	ugs_w
Gearbox potentiometer	Gear Pos Volts	ugang_w
Clutch pressure	Pressure clutch	pclutch_w
Gearbox oil temperature	Gearbox Oil Temp	–
Complete car		
Wheel speed sensors (4x)	Wheel Speed	—
Battery voltage	Battery Voltage at Dash	ub
Acceleration sensors (x,y,z)	G Lat G Long G Force Vert	accv_w accx_v
Brake balance potentiometer	Brake Bias Setting	–
Brake light switch	Brake Status	–
Fuel level	*Display only in MoTeC Dash when stationary*	

Downloaded from www.Manualslib.com manuals search engine

10.7.1. Sensor theoretical value

Measured variable	Modas description	Theoretical value	Comments
Engine idle speed	nmot_w	2000 +/-100 rpm	At operating temperature (80°C oil)
Throttle angle idle speed	wdkba_w	6.5 +/- 1.0 °	
Throttle angle full power	wdkba_w	80 +/- 2 °	Bosch value => equals 100% in Motec
Lambda cylinders 1-3/4-6	lamsoni(2)_w	0.9 +/- 0.1	Throttle angle > 10°
Lambda regulation factor	fr(2)_w	1.0 +/- 0.2	
Battery voltage	ub	13 +/- 1 V	
Water pressure	pwater	> 0.2 bar	
Fuel pressure	pfuel	4.6 +/- 0.3 bar	Average value over one complete lap
Clutch pressure	pclutch_w	> 30 bar	With clutch pedal completely depressed
Voltage gear shift force sensor	ugs_w	2,5 +0,1 / -0,15 V	When the lever is not touched
Gearbox potentiometer voltage	ugang_w		
6.		3.85 V	Is incidental
5.		3.45 V	Is incidental
4.		3.04 V	Is incidental
3.		2.64 +/- 0.04 V	This value must be set
2.		2.21 V	Is incidental
1.		1.82 V	Is incidental

10.7.2. Optional sensors

As an option, Brückle Motorsport provides both a steering angle and brake pressure sensor, In addition, increasing the memory size is recommended if the optional sensors are fitted. Additional memory is also provided by Brückle Motorsport.

Downloaded from www.Manualslib.com manuals search engine

10.8. Engine Control Unit (ECU)

The GT3 Cup is equipped with a Bosch MS 3.1 ECU specially developed for motorsport applications. The Bosch MS 3.1 can be programmed with special software. The ECU is programmed exclusively by Porsche Motorsport. If an engine is overhauled by Porsche Motorsport the ECU should be delivered with the engine to run them both together on the dynamometer.

As a safety precaution the ECU should always be disconnected from the wiring loom and removed from the car if welding work is carried out.

10.8.1. ECU DIAG

The message 'ECU DIAG' is displayed in the MoTeC dash when electric errors (sensors) occur at a specific frequency or are always active. The message also indicates MS3.1 system errors.

A special software (Bosch Modas), which can be purchased from Porsche Motorsport, is required to delete the errors.

10.8.2. MODAS

With the MODAS software various parameters can retrieved from the ECU and modified.

In addition, errors occurring are saved in an error log that can be retrieved for analysis.

Downloaded from www.Manualslib.com manuals search engine

The Laptop used must have the following minimum system requirements:

- WINDOWS 98, 2000, XP (NT is not supported)
- 64 MB RAM
- 233 MHz Processor
- 4 Gigabyte free hard disk space
- Parallel Port with vehicles older than 2008 otherwise USB
- CD–Rom drive

A copy of the MODAS user instructions is included with the car.

10.9. Relay- and fuse assignment

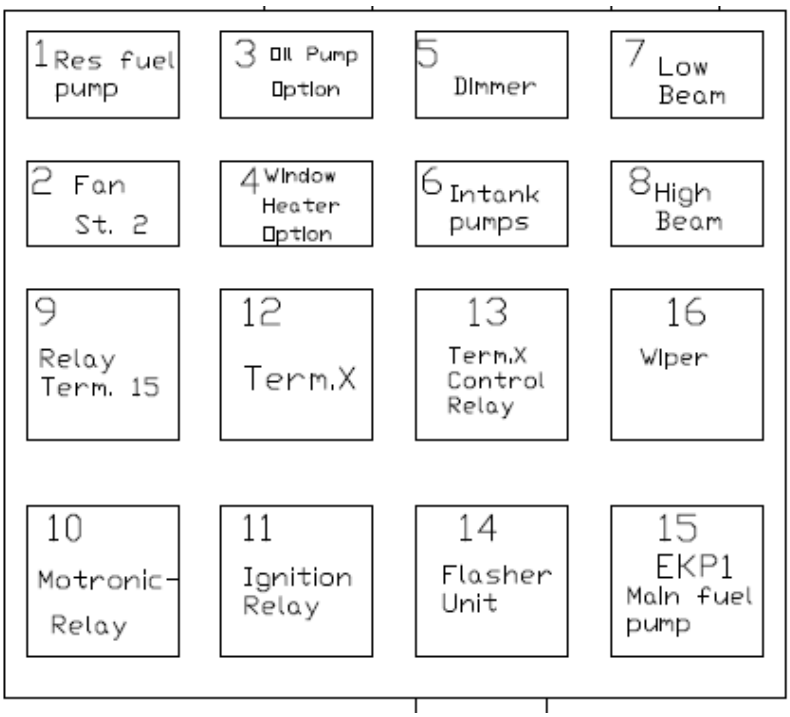

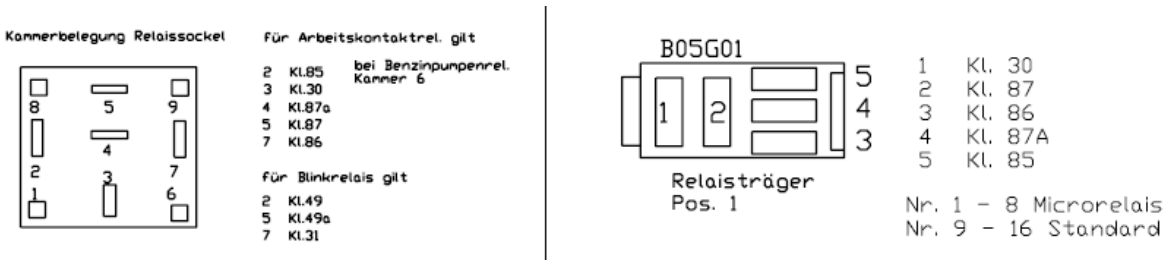

Downloaded from www.Manualslib.com manuals search engine

10.10. Fuse carrier

Fuseholder A		Ampere
1	High Beam R	7,5
2	High Beam L	7,5
3	Parking Light R	7,5
4	Parking Light L	7,5
5	Rear Fog Light	7,5
6	Front Fog Light	25
7	Low Beam R	7,5
8	Low Beam L	7,5
9	Hazard Warning Sig. Term. 15	15
10	Break Lights Term.15	15
11	Spare Term. 15	5
12	Data,Illuminatin Term. 15	10
13	Motec Term. 30	7,5
14	ECU Bosch Term. 15	15
15	Intankpump 1 / 2	10
16	Intankpump 3 / 4	10

Fuseholder B		Ampere
1	Contr. D+,Rel Dimmung Term.15	7,5
2	Power steering Term.15	7,5
3	Relay Motronic Term.30	30
4	Relay fuel pump Term.30	25
5	Relay fuel res. pump Term.30	25
6	Wiper System Term.X	25
7	Fan Switch Term.X	7,5
8	Daytime Running Light Term.X	10
9	Reserve Term.30	
10	SP Data Term.30	7,5
11	Option (Oil Level)	30
12	Relay Fan Term.30	30
13	Hazard Warning Signal Term.30	15
14	Memory Term.30	7,5
15	Switch Intank pumps Term.30	5
16	Relay Window Heater Term.30	25

Downloaded from www.Manualslib.com manuals search engine

11. Car maintenance

Porsche Motorsport recommends that the following minimum maintenance work is carried out after the corresponding mileage:

11.1. After approx. 200 km and/or first test

- Visual inspection of all systems. hoses and cables etc. for leakage. damage or chafing
- Tighten all fasteners to the defined torque:
- All suspension mounting bolts
- Driveshafts
- Engine mountings
- Gearbox mountings

11.2. After every session

- Visual inspection of all systems. hoses and cables etc. for leakage. damage or chafing
- Check the specified torque setting of every safety relevant fastener
- Check dampers for leakage
- Drain the fuel and calculate the fuel consumption
- Check all suspension bearing for play
- Clean coolers
- Clean dust and rubber pick-up from brake discs + calipers
- Bleed brake system
- Bleed clutch (once per weekend)
- Clean pedal box area and check functionality
- Clean and inspect wheel safety mechanism
- Check oil level
- Check driveshaft rubber boots for damage
- Check steering system rubber boots for damage
- Check all system for leakage

Downloaded from www.Manualslib.com manuals search engine

11.3. After every race weekend (sprint)

In addition to points in 11.2:

- Engine oil and filter change (after 'hot races' → engine oil > 140° C)
- Check compression and pressure loss of each cylinder
- Clean/replace air filter
- Change brake fluid
- Check brake balance setting
- Clean brake balance system
- Change brake fluid
- Check clutch wear
- Check wheel bearing play
- Check throttle cable route and setting
- Check air-jacks for leakage and seated correctly
- Check seat and safety harness
- Check fire extinguisher
- Check flywheel and pulley side rotary shaft seals for leakage

11.4. After 3 - 4 race weekends (sprint)

- Rebuild brake calipers
- Replace fuel pumps and filter
- Overhaul dampers
- Check driveshaft CV joints

11.5. After 20 respectively 30 hours running time

- Gearbox rebuild

  See 5.12

11.6. After 50 hours running time

- Engine rebuild

  See 3.9

Downloaded from www.Manualslib.com manuals search engine

11.7. Operating fluids

Description / Field of application	Part Number	Name
Oil for power steering pump	000.043.206.56	Pentosin CHF 11 S
Brake fluid	996.355.960.90	Endless
Coolant	000.043.301.03	1 litre
Anti-corrosion additive	997.106.907.90	1 litre
Gearbox oil Mobilupe 1 SHC 75W 90	999.917.062.00	1 litre
Engine oil, Porsche initial filling	Recommendation	MOBIL 1 Super Syn 0W-40
Drive shaft grease, 125 gr. tube	996.332.897.9A	Krytox GPL 217
Grease for lambda probes	Recommendation	MOLYSLIDE 607, Anti Seize
Copper paste wheel nut / centre bolt Optimoly - HT	000.043.004.00	Optimoly - HT
Silicon sealing engine	996.199.915.06	9 Bond 2210, 310 ml tube
Grease for exhaust bolts	000.043.020.00	Optimoly
Loctite kingpin lower wishbone		Loctite 243
Grease for pilot bearing	000.043.024.00	Höchstdruckfett
Driving pin on wheel hub		Loctite 270

Downloaded from www.Manualslib.com manuals search engine

Imprint

Publisher
Dr. Ing. h.c. F. Porsche AG
Sales and Marketing Special and Motorsport Cars
Porschestraße
71287 Weissach

Postfach 1140
71283 Weissach

Editorial: Steffen Höllwarth

Version 01/2012

Illustrations. descriptions and schematic drawings serve exclusively as presentation for the text. We undertake no liability for the completeness and conformity of the contents with respect to the legality of the current sporting regulations.
Porsche AG reserves the right for technical changes.

© Copyright by Dr. Ing. h.c. F. Porsche AG

Downloaded from www.Manualslib.com manuals search engine