Service Manual for Chery QQ6

(QR513 Transmission Case)

After Sales Service Department of Chery
Automobile Sales Co., Ltd

Downloaded from www.Manualslib.com manuals search engine

CONTENTS

Foreword 2
Chapter One Introduction of QR513 Transmission 3
I. Assembly Drawing of QR513 Transmission 3
II. Driving Characteristics of QR513 Transmission 4
III. SN of QR513 Transmission 4
1. Print position of SN of QR513 transmission 4
2. Composition and connotation of SN of QR513 transmission 4
IV. Specification of QR513 Transmission 6
V. Maintenance Instruction 7
Chapter Two Decomposition of QR513 Transmission 8
I. Decomposition Process for QR513 Transmission 8
1. Bleeding lubricant in transmission 8
2. Disassembly of external parts of transmission 8
3. Separation of gear shift mechanism and transmission 9
4. Disassembly of the connecting bolts for clutch and transmission housings 10
5. Separation of transmission and clutch housings 10
6. Separation of interior transmission parts and fork module from the housing 11
7. Separation of differential assembly and clutch housing 12
8. Disassembly of gearshift fork mechanism 12
9. Disassembly of gearshift mechanism 13
10. Disassembly of input shaft 13
11. Disassembly of output shaft 15
12. Disassembly of differential 15
13. Disassembly of release mechanism of clutch 16
14. Disassembly of transmission housing 17
Chapter Three Assembly and Regulation of QR513 Transmission 18
I. Assembly of QR513 Transmission 18
1. Assembly of differential assembly 18
2. Assembly of clutch housing 19
3. Assembly of transmission housing 23
4. Assembly of gearshift mechanism assembly 23
5. Assembly of gearshift fork assembly 24
6. Regulation and assembly of input shaft assembly 24
7. Regulation and assembly of output shaft assembly 26
8. Assembly and regulation of transmission assembly 28
9. Disassembly of external accessories of transmission 31
10. Refilling and volume regulation of transmission lubricant 32
II. Tightening Torque Table for Fasteners 34
Chapter Four General Failures and Troubleshooting 35

Downloaded from www.Manualslib.com manuals search engine

Foreword

1. This service manual applies to use and maintenance of QR513 transmission manufactured by Chery Automobile Co., Ltd.

2. ***Service Manual for QR513 Transmission*** describes relations among various parts and assemblies of this transmission, which provide the maintenance personnel with a reference when maintaining and repairing QR513 transmission.

3. Due to restrictions of the compiler's level and other conditions, errors and imperfections may exist in this service manual. During maintenance and use, please inform us of any problem in and improvement idea on QR513 transmission and this service manual, so that we can correct and perfect this service manual, for which we express our thanks herein.

Downloaded from www.Manualslib.com manuals search engine

Chapter One Introduction of QR513 Transmission

I. Assembly Drawing of QR513 Transmission

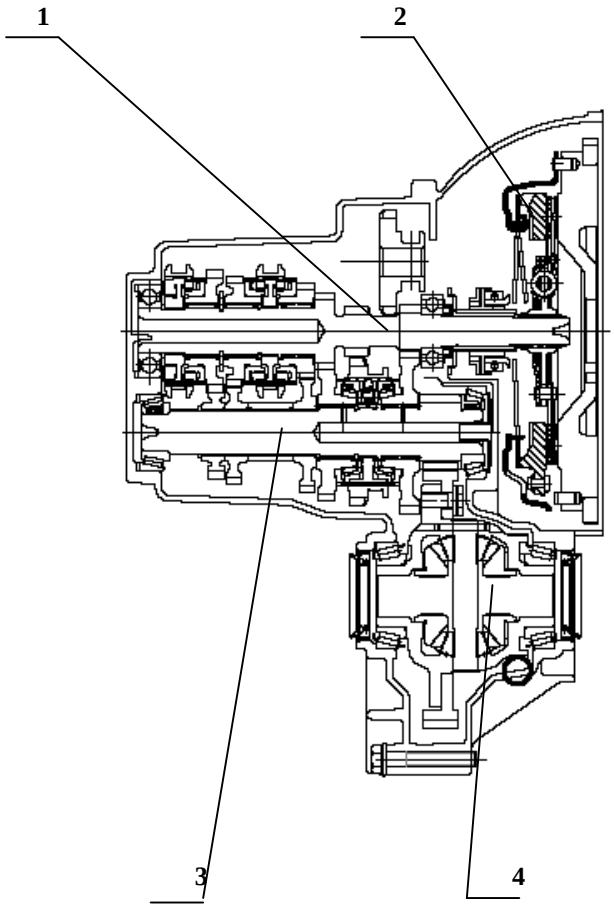

1. Input shaft 2. Clutch 3. Output shaft 4. Differential

Downloaded from www.Manualslib.com manuals search engine

II. Driving Characteristics of QR513 Transmission

This transmission achieves five forward gears and one reverse gear through three groups of synchronizers and two shafts-input shaft and output shaft; all forward gears adopt conventional engagement system while reverse gear adopts a gliding idler device. The synchronizers of the first and second gears are installed on output shaft while the synchronizers of the third, fourth and fifth gears are installed on input shaft. When the transmission is shifted to various gears, these synchronizers will engage with corresponding gear hub to enable transmission of power, and then the driving gear of main decelerator will drive the driven gear of main decelerator and differential assembly to rotate, which will drive the drive shaft to drive the wheels to rotate.

III. SN of QR513 Transmission

1. Print position of SN of QR513 transmission

The print position of SN of QR513 series transmission is as shown in the figure:

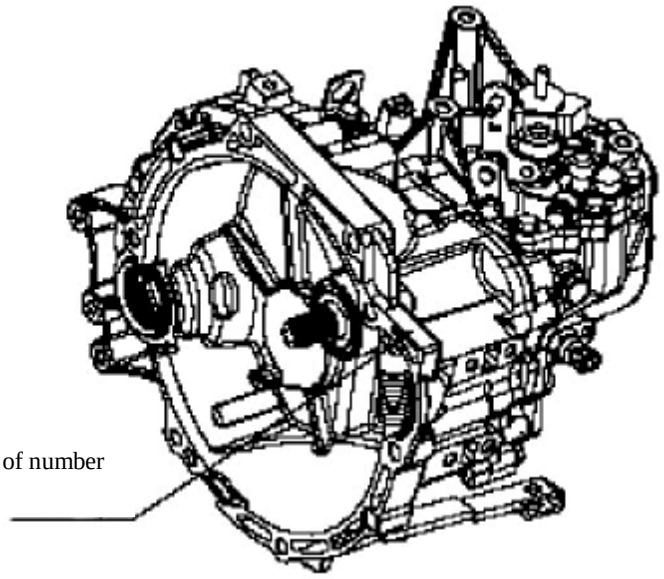

2. Composition and connotation of SN of QR513 transmission

SN of QR513 series transmission is consisted of model and leaving factory number of the transmission case.

Downloaded from www.Manualslib.com manuals search engine

1) Model of the transmission case

Model of the transmission case is composed of code QR, number of shift gears of the transmission, maximum transmission torque, characteristic code and structure specification number.

A complete transmission case model is as follows:

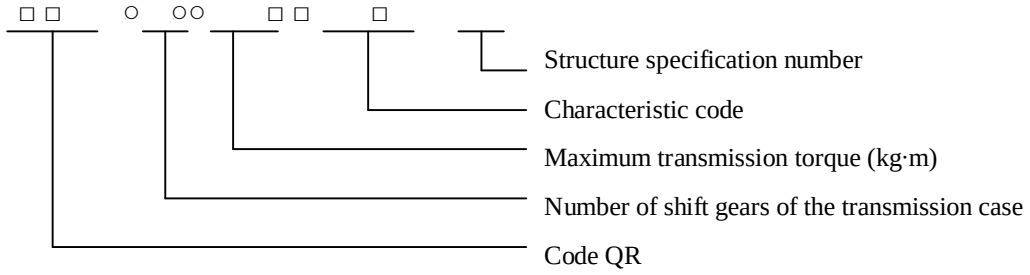

Among which, ○ indicates an Arabic numeral while □ indicates a letter.

2) Leaving factory number

Leaving factory number is composed of endnote of assembly part number (for that without endnote, us AA), character code of the year of production, character code of the month of production, sequence number of this transmission case among the transmission cases manufactured in that month and start stop sign "*". See Table 1 and Table 2 for check list of character codes of the year and of the month.

Complete form of leaving factory number of a transmission case is as follows:

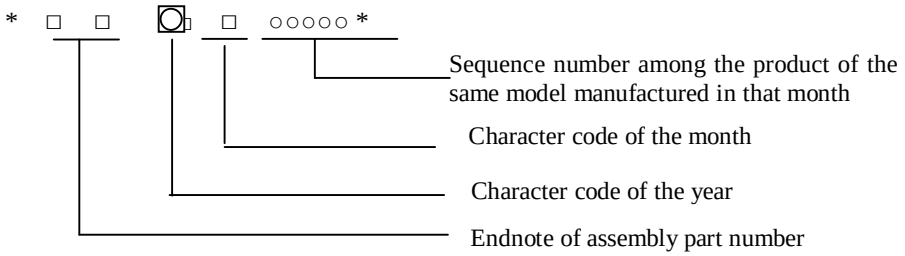

Among which, ○ indicates an Arabic numeral, □ indicates a letter and indicates an Arabic numeral or a letter. The endnote locates at tail end of the part code, for a fundamental model, no endnote. The endnote should be modified when modification is made to structure, dimension, material, heat treatment requirements and surface treatment etc. of the part or assembly on the basis of original product. The English letter in the code should be upper case letter (use in sequence with "A" as the first), in order to avoid confusion, do not use "I", "O" and "X". When the modification does not affect interchangeability, use "A" as the first; when the modification affects interchangeability, skip "A", use "B" as the first.

Table 1 Character Codes Indicating the Years

Year	Code	Year	Code
1999	X	2015	F
2000	Y	2016	G
2001	1	2017	H
2002	2	2018	J
2003	3	2019	K

Downloaded from www.Manualslib.com manuals search engine

2004	4	2020	L
2005	5	2021	M
2006	6	2022	N
2007	7	2023	P
2008	8	2024	R
2009	9	2025	S
2010	A	2026	T
2011	B	2027	V
2012	C	2028	W
2013	D	2029	X
2014	E	2030	Y

Table 2 Character Codes Indicating the Months

Month	Code	Month	Code
January	A	July	G
February	B	August	H
March	C	September	J
April	D	October	K
May	E	November	L
June	F	December	M

3) Illustration

For example: QR513MHA MH5H00001 indicates the first transmission case with the model as QR513MHA manufactured in August, 2005.

IV. Specification of QR513 Transmission

	QR513 Series Transmission			
Type	Machine Gear Mesh			
Model	QR513MHA		QR513MHB	
Gear shift	Velocity Ratio	Teeth Ratio	Velocity Ratio	Teeth Ratio
First Gear	3.545	39/11	3.167	38/12
Second Gear	2.05	41/20	2.05	41/20
Third Gear	1.423	37/26	1.423	37/26
Fourth Gear	1.065	33/31	1.065	33/31
Fifth Gear	0.865	32/37	0.865	32/37
Reverse Gear	3.364	37/11	3.364	37/11
Main reduction ratio	4.056	73/18	75	16

Downloaded from www.Manualslib.com manuals search engine

Speedometer	0.806	29/36	0.806	29/36
Largest input torque	130 Nm			
Lubricant oil type	GL-4 75W-90			
Volume of lubricant	1.8L			

V. Maintenance Instruction

- In order to ensure maintenance quality of the transmission, when operating, please be careful and ensure cleanness of each part of the transmission.
- Use appropriate tools or special tools.
- Strictly follow the specification to assembly or adjustment to maintain so as to ensure that the transmission can accomplish a favorable working position.

Downloaded from www.Manualslib.com manuals search engine

Chapter Two Decomposition of QR513 Transmission

I. Decomposition Process for QR513 Transmission

1. Bleeding lubricant in transmission

First, drive the vehicle onto a maintenance platform or hoist the vehicle and keep it on a horizontal plane, screw off the bleeding plug as shown by the arrowhead, and then use a clean container to accommodate lubricant of the transmission to completely bleed the lubricant in the transmission.

Figure 1

2. Disassembly of external parts of transmission

Switch the transmission to NEUTRAL position; use an appropriate tool to remove the locating seat of the fork shaft as shown in Figure 2; Connecting bolts for gearshift housing and transmission housing and the screws for backup lamp switch and idler shaft.

Downloaded from www.Manualslib.com manuals search engine

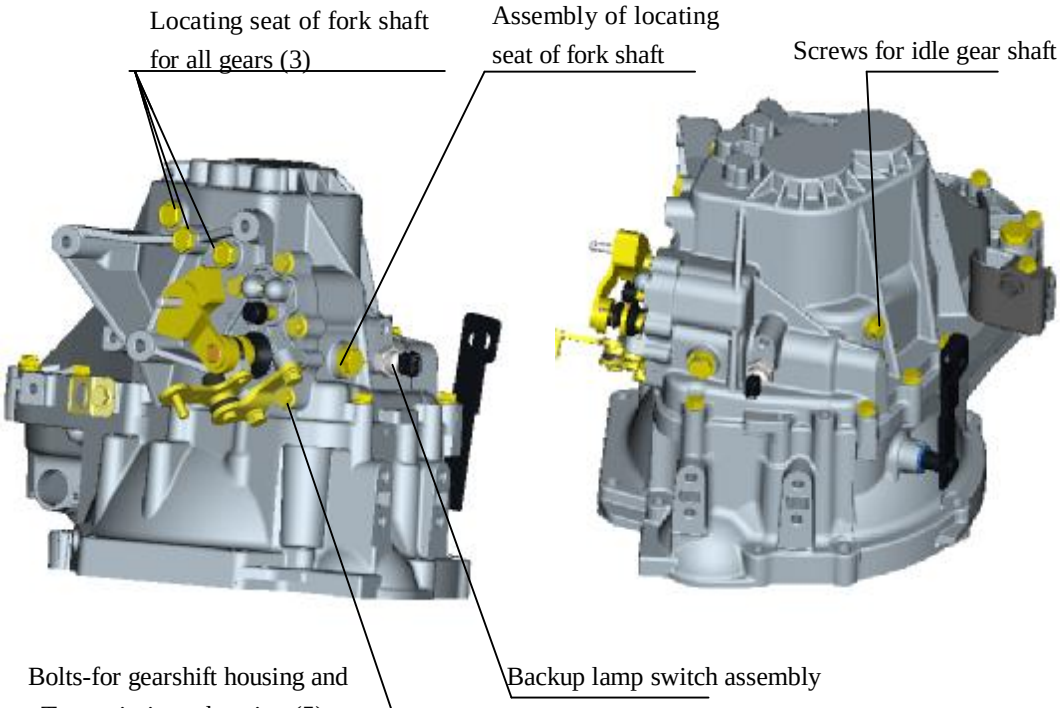

Figure 2

3. Separation of gear shift mechanism and transmission

Remove the gearshift mechanism assembly from the place as shown in Figure 3; as a result of sealant, the disassembly process may be difficult, so, use such tools as a hand hammer etc. to knock on the bulge at flank of housing of the gearshift mechanism, and then take out the whole gearshift mechanism assembly until the two housings completely separate; remember to be slow when taking out the gearshift mechanism assembly, so as to prevent the return spring as shown in the figure from dropping out inside the transmission; during disassembly, be careful not to damage the junction planes of the two housings, so as to avoid oil leak after re-assembly.

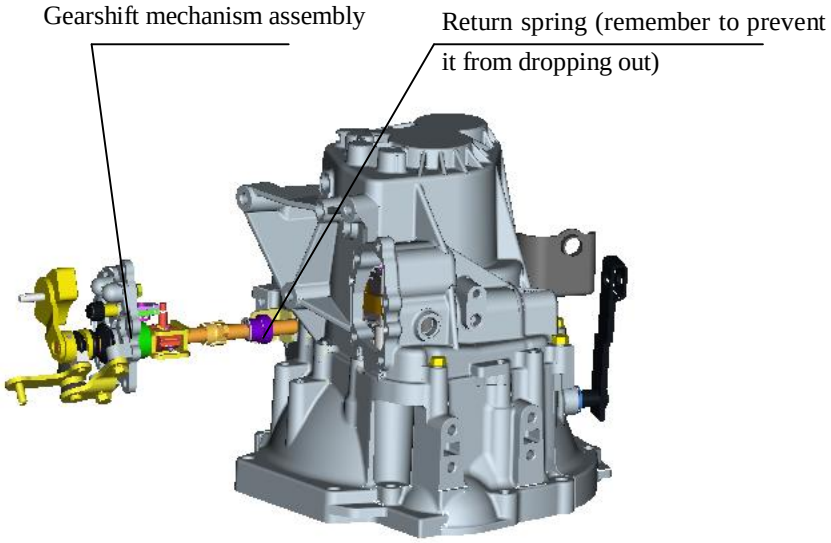

Downloaded from www.Manualslib.com manuals search engine

Figure 3

4. Disassembly of the connecting bolts for clutch and transmission housings

Use a tool to remove the connecting bolts for transmission and clutch housings as shown in Figure 4. Remember to remove the bolts both inside and outside the clutch housing when disassembling, and a sleeve with long connecting rod is required when removing the bolts inside the clutch.

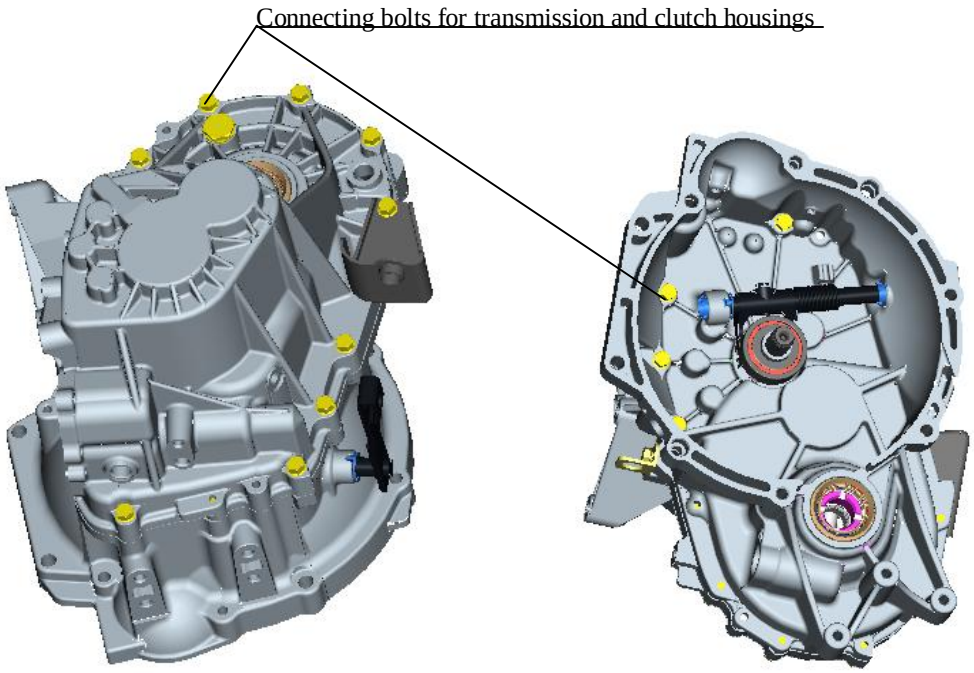

Figure 4

5. Separation of transmission and clutch housings

After the bolts for transmission and clutch housings are removed, separate clutch housing and transmission housing (Figure 5). as a result of sealant, the separation process may be difficult, so, use such tools as a hand hammer etc. to knock on the bulge at flank of housing of the transmission, and then take out the whole transmission housing until the two housings completely separate; during disassembly, be careful not to damage the junction planes of the two housings, so as to avoid oil leak of the transmission after re-assembly.

Downloaded from www.Manualslib.com manuals search engine

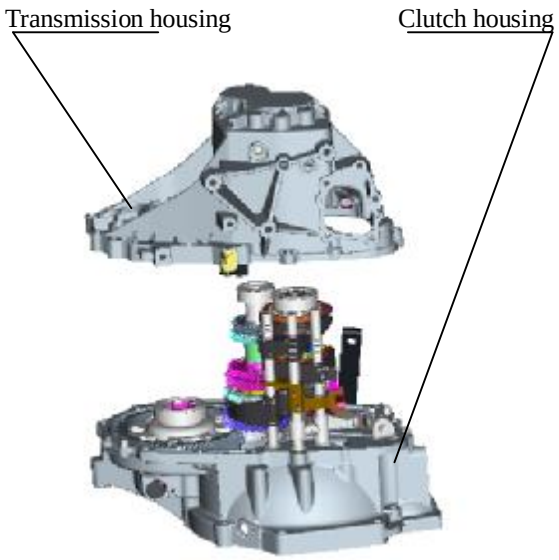

Figure 5

6. Separation of interior transmission parts and fork module from the housing

After transmission housing and clutch housing are separated, keep the clutch housing flat at the place as shown in Figure 6, remove the bolts for bracket of reverse gear rocker arm, take out the reverse gear rocker arm assembly and the pin on idler drive, and then take out input shaft, output shaft and fork mechanism together (when taking out, gently shake, meanwhile, press the driven gear of main decelerator along the direction of arrowhead as shown in the figure to take out the assembly of input shaft, output shaft and idler as well as fork mechanism); when taking out, remember to avoid interference between bearing retainer of output shaft and big gear ring of differential and prevent the bearing retainer from damage.

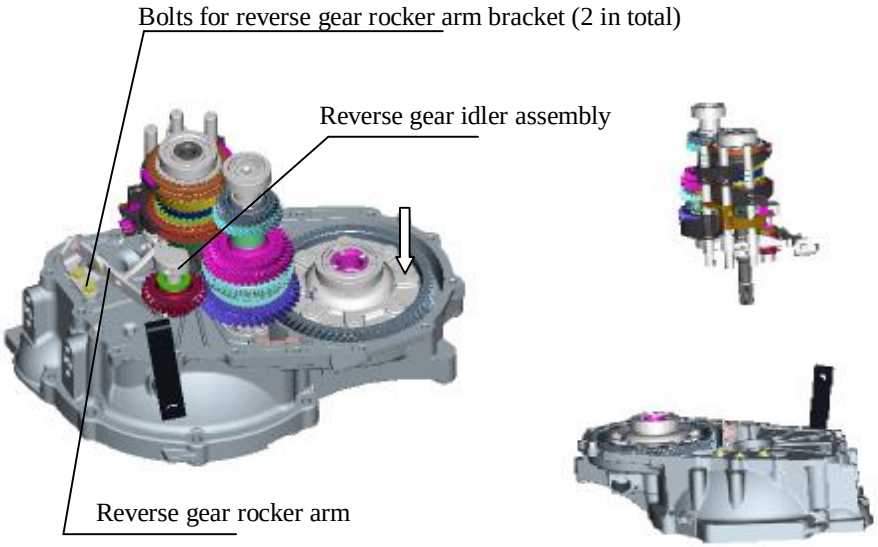

Figure 6

Downloaded from www.Manualslib.com manuals search engine

7. Separation of differential assembly and clutch housing

Separate differential assembly and clutch housing, and then simply take out the differential assembly as shown in Figure 7.

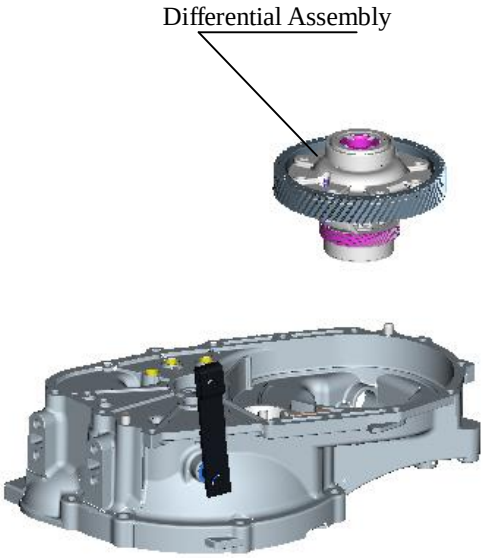

Figure 7

8. Disassembly of gearshift fork mechanism

Use a hammer and a special tool to knock off all spring pins and then use a snap ring pliers or other special tool to take the split washer off the fork shaft (when taking off the split washer, prevent it from deformation), and then disassemble each part of the gearshift mechanism.

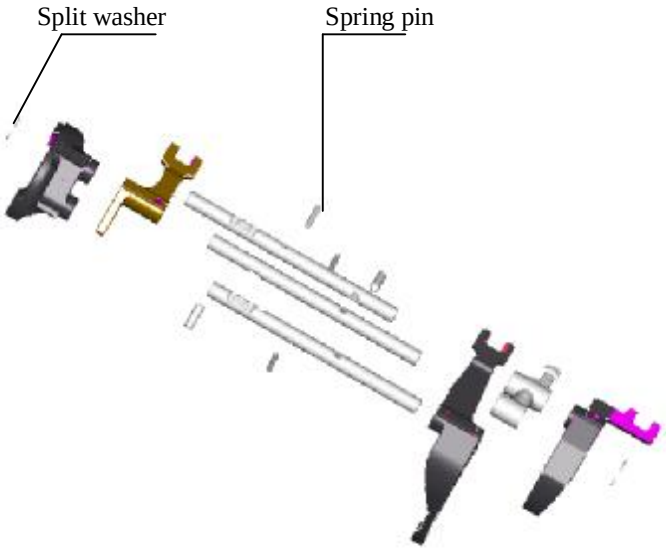

Downloaded from www.Manualslib.com manuals search engine

Figure 8

9. Disassembly of gearshift mechanism

As shown in Figure 9, remove the gearshift arm bracket bolts and reverse gear lockup mechanism bolts first, use a hammer and a special tool to knock off all spring pins, use a special tool to remove the split washer, and then disassemble each part of the gearshift mechanism.

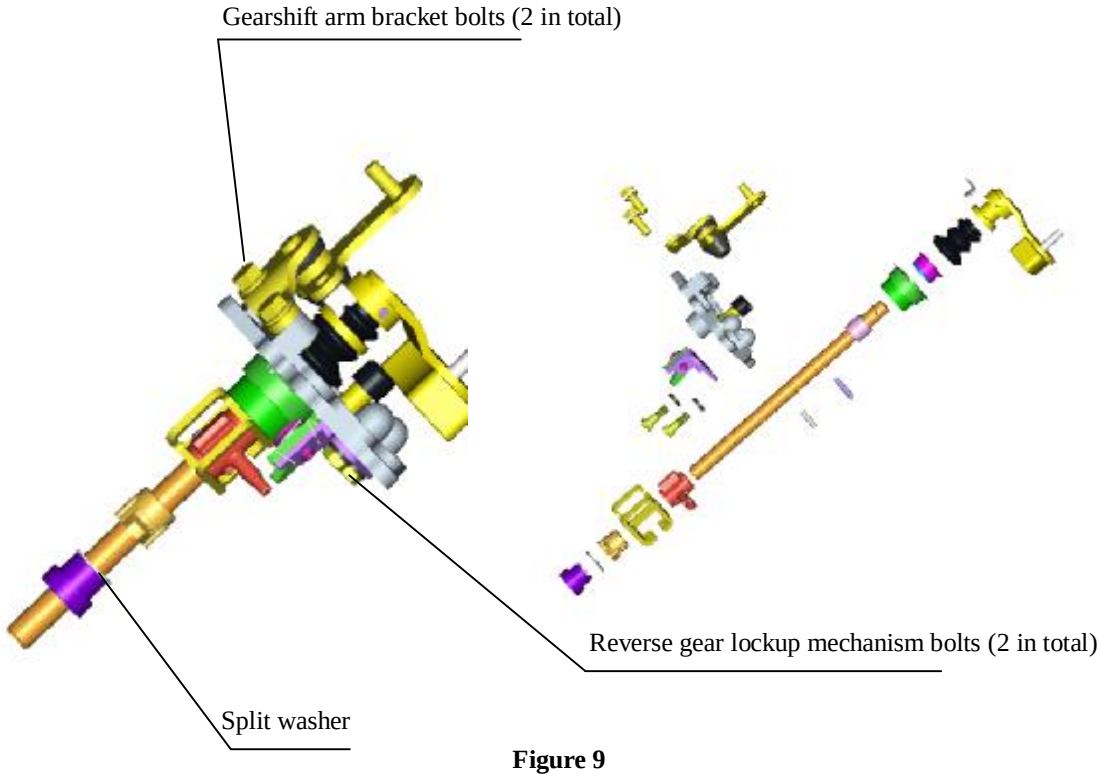

Figure 9

10. Disassembly of input shaft

As shown in Figure 10, Use a special tool (such as bearing remover etc.) to remove the two bearings on the input shaft first, use a special tool to remove the rear snap ring, and then take off the fifth gear synchronizer assembly.

Downloaded from www.Manualslib.com manuals search engine

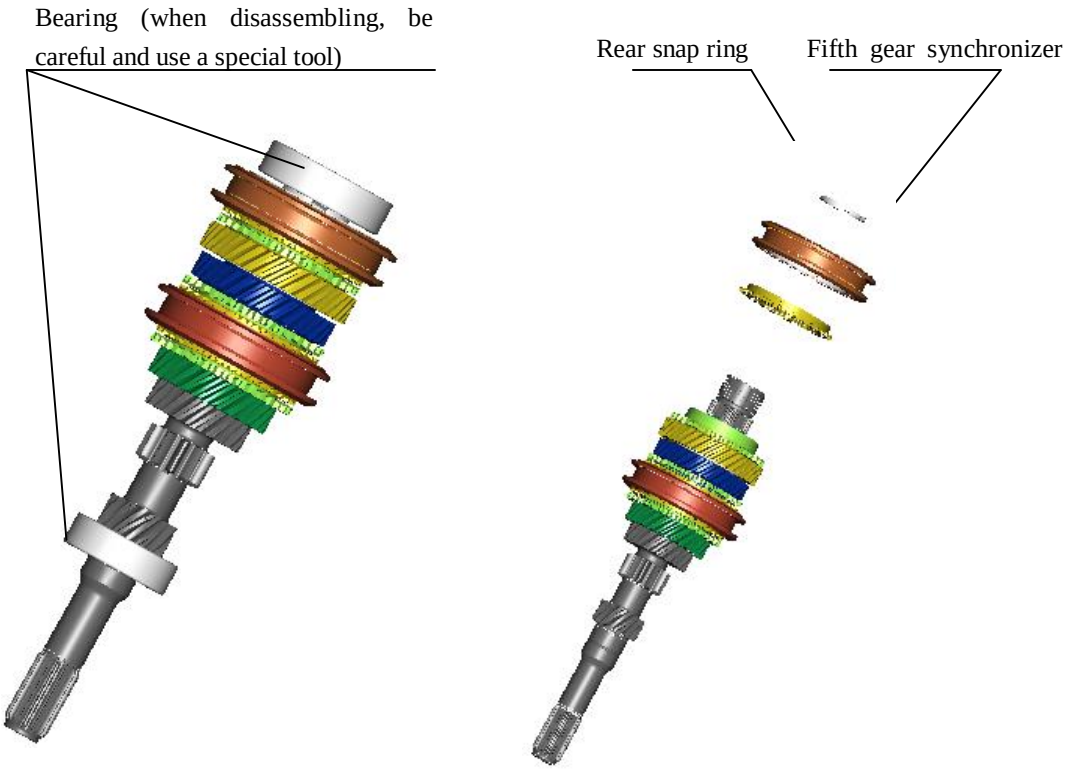

Figure 10

After the fifth gear synchronizer assembly is removed, remove the remaining parts such as shift gears, needle bearings and synchronizers in turn as shown in Figure 11; when disassembling, be sure to keep the synchronizer of each gear concurrent with its corresponding synchronizer ring.

Figure 11

Downloaded from www.Manualslib.com manuals search engine

11. Disassembly of output shaft

The method and process for disassembly of output shaft are basically the same as those for input shaft and the output shaft can be disassembled to the status as shown in Figure 12.

Figure 12

12. Disassembly of differential

As shown in Figure 13, use a special tool to take off the two bearings first, remove the bolts for driven gear and differential housing, remove the driven gear, knock off the fixing pin of the planetary gear, and then take out every part inside the differential (Figure 14).

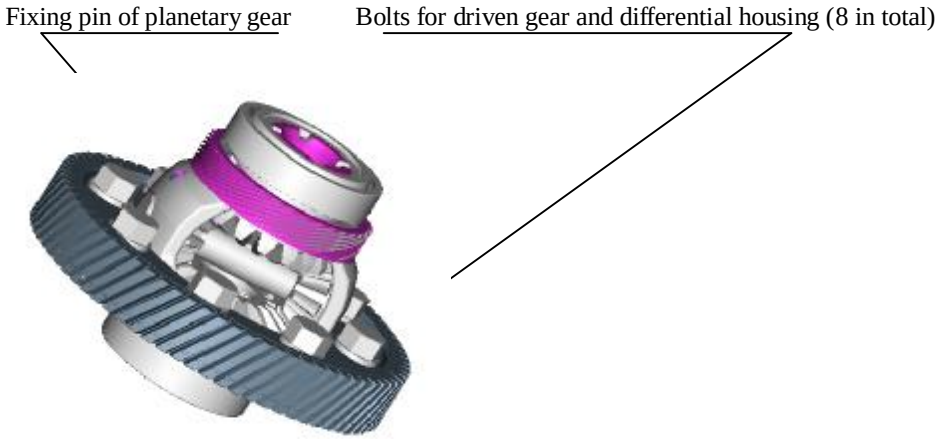

Figure 13

Downloaded from www.Manualslib.com manuals search engine

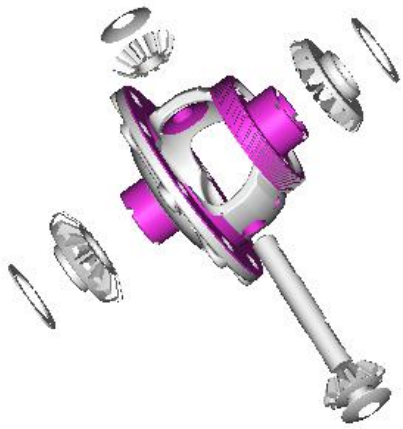

Figure 14

13. Disassembly of release mechanism of clutch

As shown in Figure 15, take off release bearing of the clutch first, remove the bolts for release fork, and then draw the release shaft assembly off the clutch housing (during the drawing off process, be sure to prevent the release return spring from ejection); also, remove the bush and dismount release mechanism of the clutch from the clutch housing.

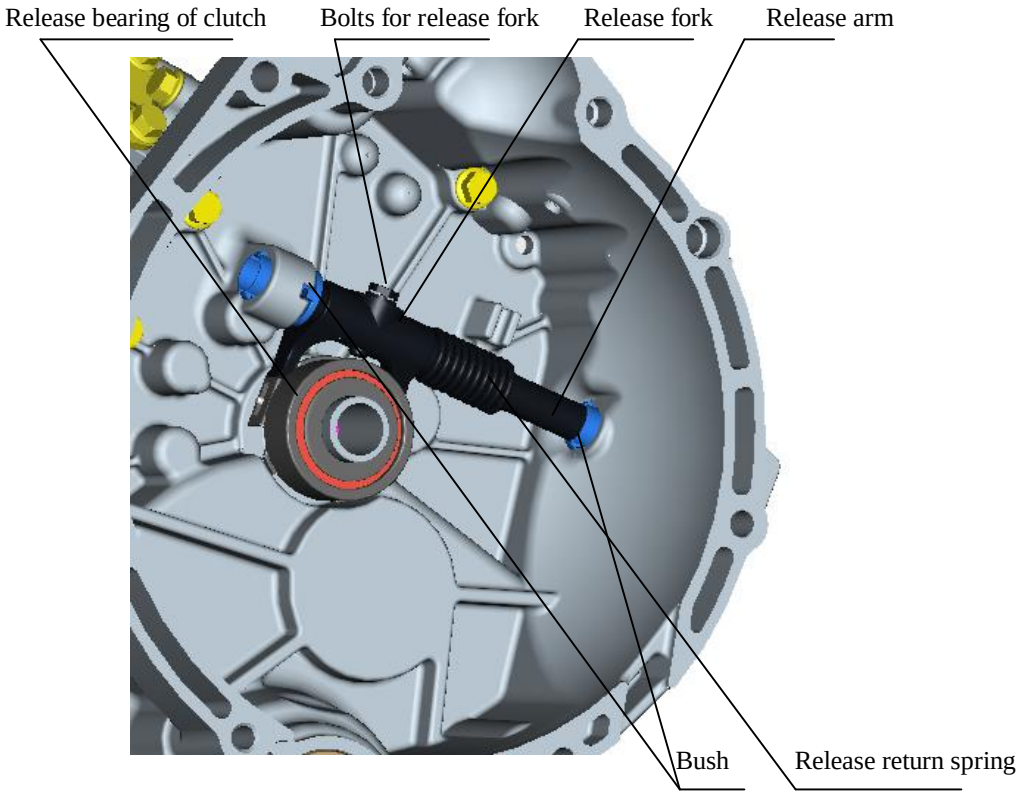

Downloaded from www.Manualslib.com manuals search engine

Figure 15

Be sure to use special tool and be careful to remove the oil seal on the clutch housing, because excessive deformation or damage of the oil seal may result in oil leak of the transmission. Use a special tool to remove the two oil seals on the clutch housing, and then remove the remaining bushes, oil ducts and outer rings of bearings as shown in Figure 16. Replacing with new oil seals after the former ones are removed is recommended.

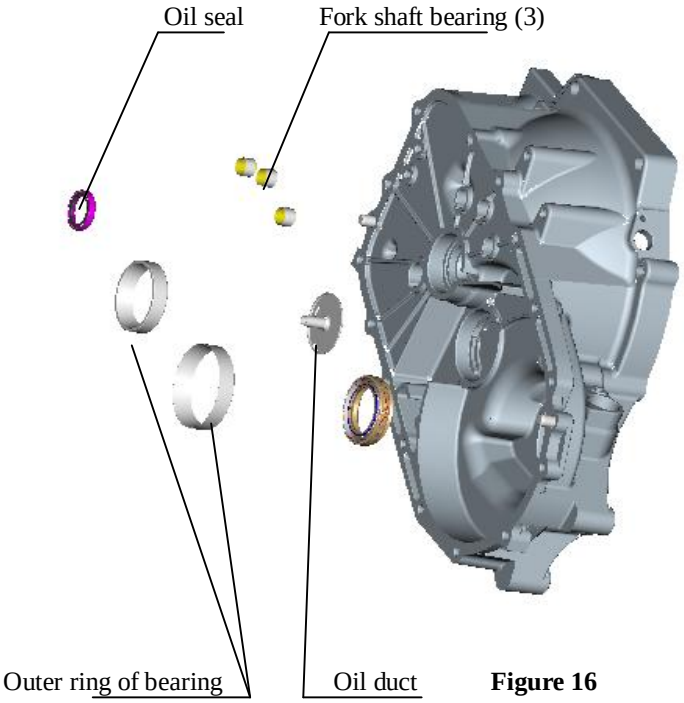

Figure 16

14. Disassembly of transmission housing

As shown in Figure 17, use a special tool to remove the oil seal of transmission housing, and then remove oil drain channel, fork shaft bush and linear bearing.

Downloaded from www.Manualslib.com manuals search engine

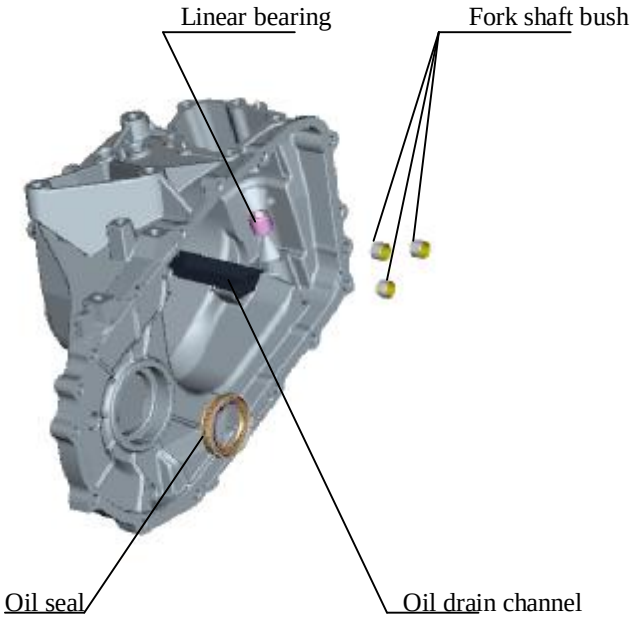

Figure 17

Chapter Three Assembly and Regulation of QR513 Transmission

I. Assembly of QR513 Transmission

After disassembly, visually inspect parts for any abnormal condition such as deformation etc, and make records; Replace the damaged parts, clean and wash all parts, then reassemble.

1. Assembly of differential assembly

Fit adjustment gaskets respectively at backsides of the two half axle gears, and then install the two half axle gears together with their gaskets into the differential. When fitting adjustment gaskets for the half axle gears, select the gasket with thickness as 1.2mm first. Fit spherical washers for the planetary gear, and then simultaneously engage the two planetary gears with the two half axle gears (fit them to correct positions while turning the gears). Insert the planetary gear shaft; note that the fixing pin hole on the shaft should align correctly with that on the differential housing both in the position and along the direction. Measure the clearance between the half axle gear and the planetary gear, and the normalized value should be **0.025~0.150mm**; if the clearance does not conform to the normalized value, replace the adjustment gaskets for the half axle gear, and then re-measure the clearance until it conforms to the standard with uniform clearance at both sides. Drive down the fixing pin of planetary gear shaft from the fixing pin hole at the side of differential housing with flange with the pin with end surface of the pin hole. Install driven gear of main decelerator and ensure that the installation end surface of the gear fits well with the end surface of the differential housing, and then fix the driven gear of main decelerator with bolts (apply sealant to full thread

Downloaded from www.Manualslib.com manuals search engine

of the bolt before installation); screw the bolts home with the torque as **130±5Nm** cornerwise and alternately; respectively press in an inner ring of front and rear bearings from each of both ends of the differential housing and check if it has been pressed to the designated position. Note that the lubricant applied onto adjustment gaskets for half axle gears, planetary gear gaskets, junction surface of planetary gear and planetary gear shaft, junction surface of half axle gear and differential housing should be the same as that used inside the transmission. Refer to Figure 18.

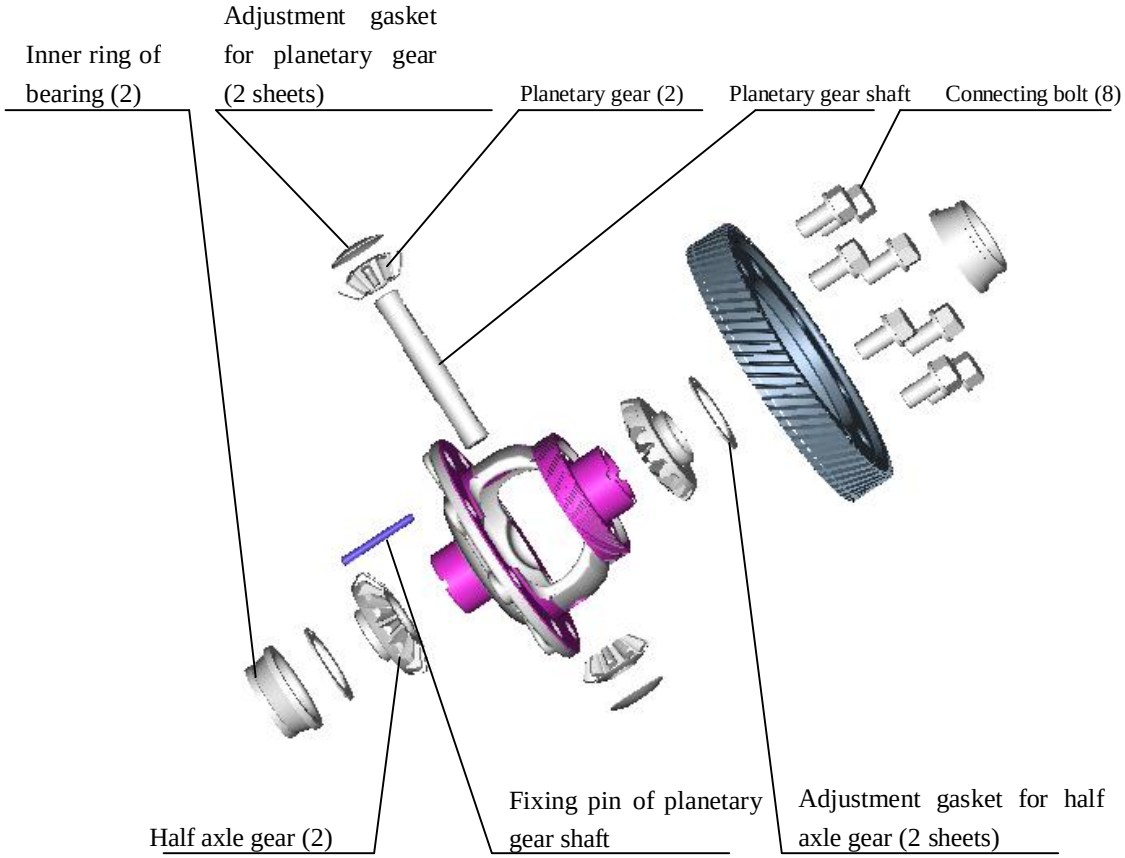

Figure 18

2. Assembly of clutch housing

Use a hammer and a special tool to fit oil seal of input shaft with spring side of the oil seal up and grease applied to lip of the oil seal. Use a special tool and a hamper to fit right side oil seal of differential with end surface of the oil seal flush with the housing surface, and then apply grease to lip of the oil seal. See Figure 19.

Downloaded from www.Manualslib.com manuals search engine

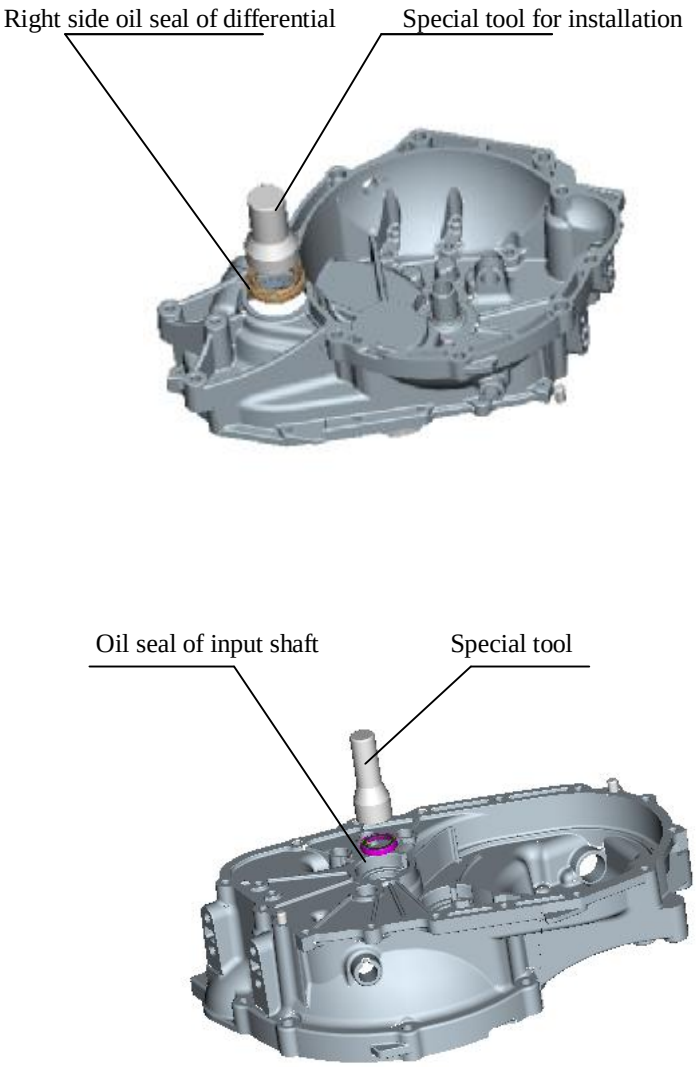

Figure 19

First, install the oil duct of output shaft to its designated position as shown in Figure 20 (note that the oil inlet and outlet of the oil duct should align with those on the housing), and then use a special tool to respectively install the outer rings of the front bearing of output shaft and the differential bearing.

Downloaded from www.Manualslib.com manuals search engine

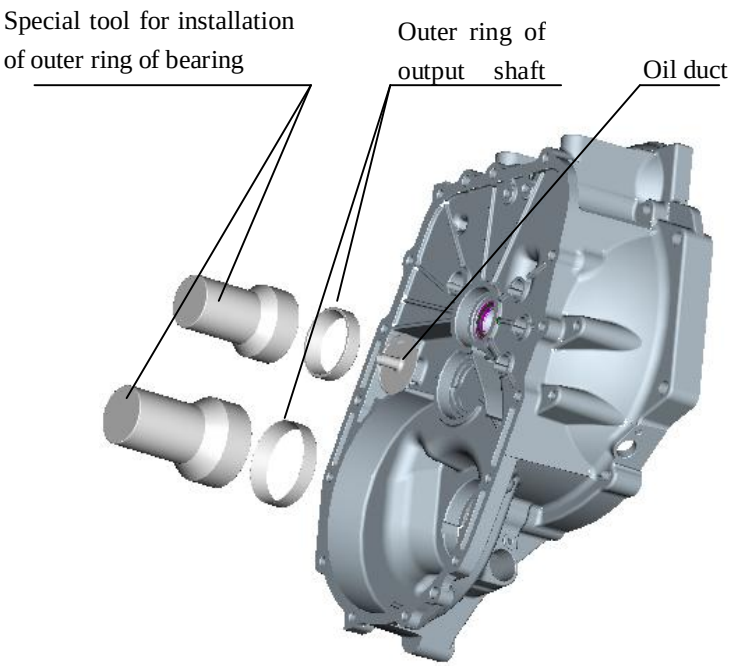

Figure 20

The tool for installation of oil seal can be used to install the three bushes. When installing the bushes, stagger the gap on the bush and that on the clutch housing (the two gaps can not coincide), as shown in Figure 21.

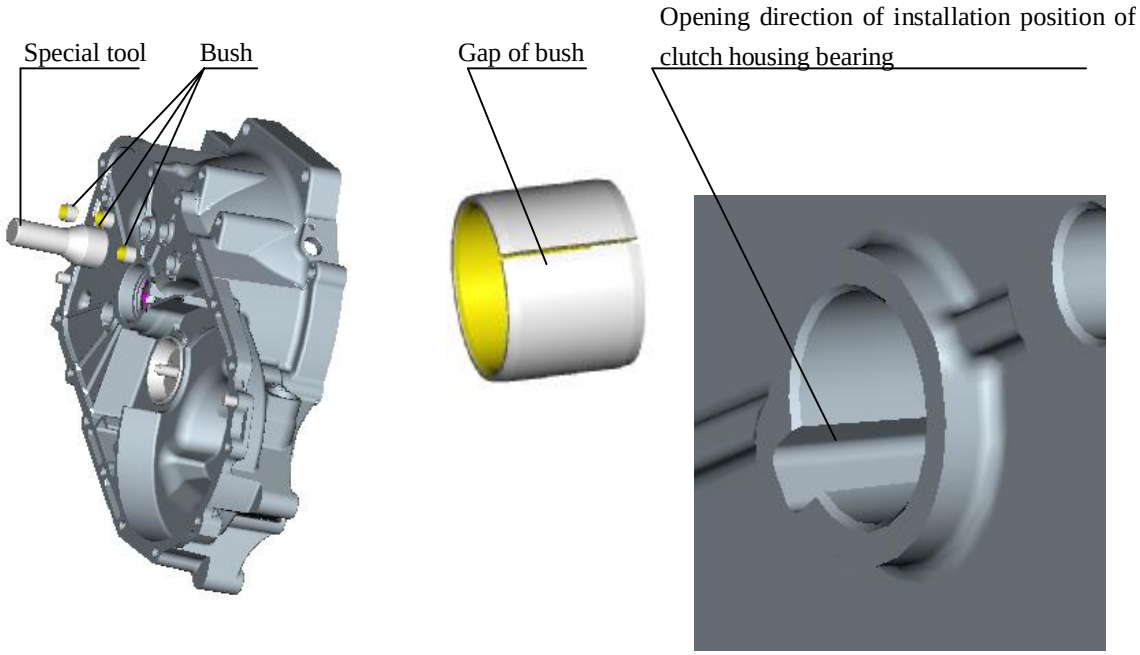

Figure 21

Downloaded from www.Manualslib.com manuals search engine

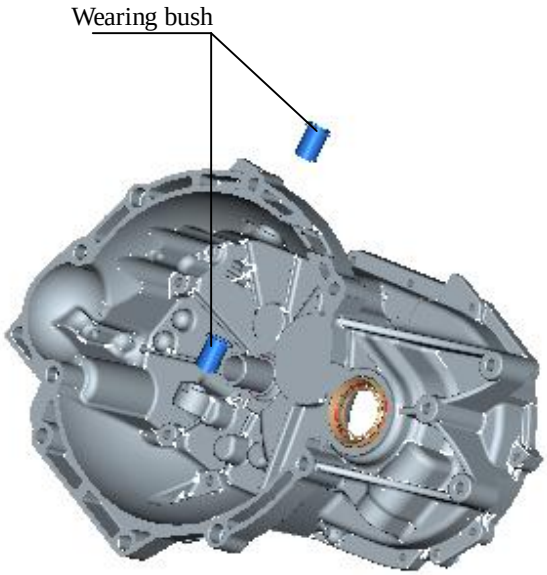

Now start to install release bearing assembly and release bearing as shown in Figure 22. First, install the two wearing bushes to their designated positions, and then put the release bearing through bush, release return torsion spring, release fork (release fork and release bearing should be assembled properly in advance, and then set the release bearing onto the housing) and bush in turn up to its designated position, finally, tighten the release arm bolts (with torque as **20±2Nm**). See Figure 23.

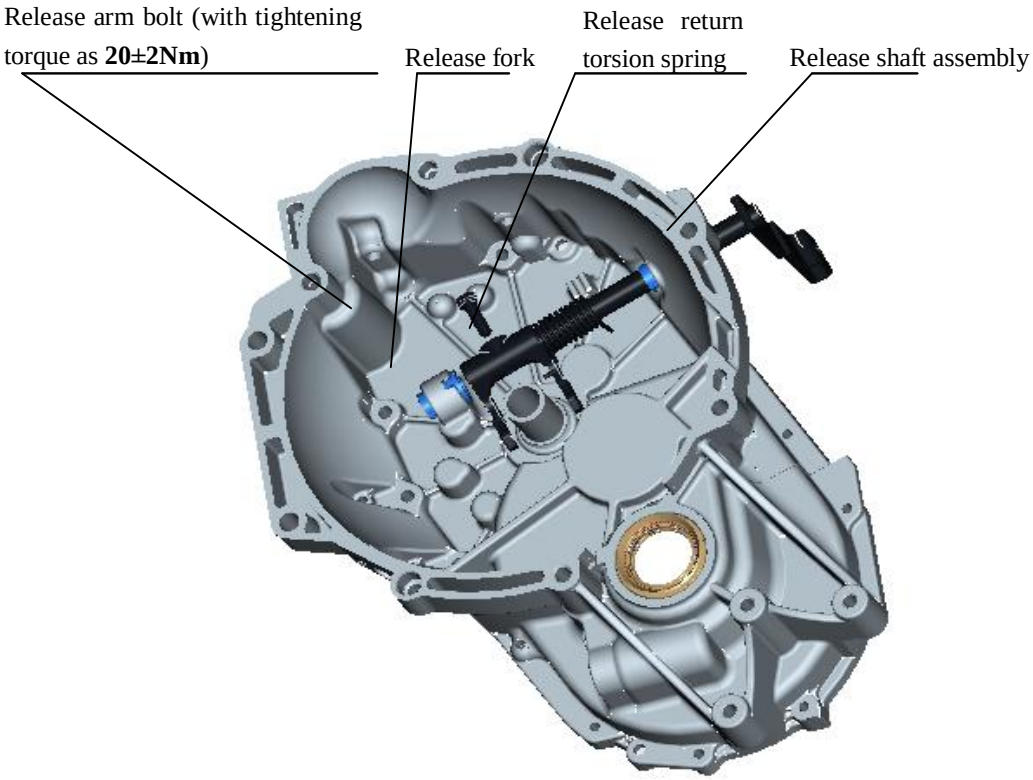

Downloaded from www.Manualslib.com manuals search engine

Figure 23

3. Assembly of transmission housing

First, use a special tool to fit oil seal of the differential to its designated position (when fitting the oil seal, care should be taken to prevent oil leak in the future, and replacement with new oil seal is recommended), and then respectively install oil drain channel, bush (**note:** the installation process for this bush is the same as that for the bush of clutch housing above), linear bearing etc. to their designated positions. See Figure 24.

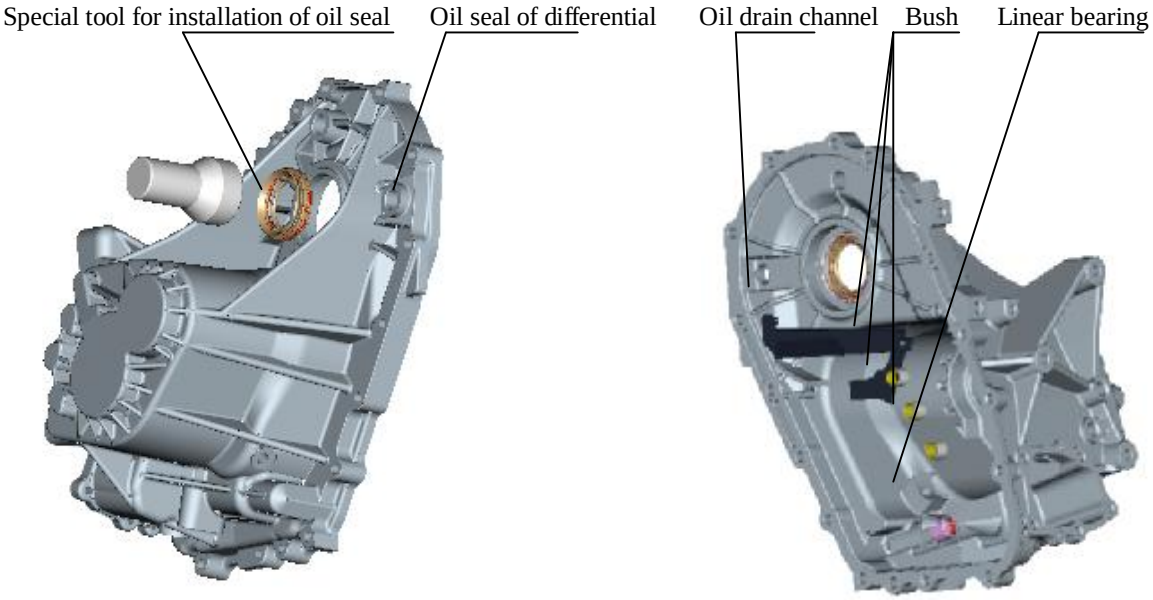

Figure 24

4. Assembly of gearshift mechanism assembly

Assembly of gearshift mechanism assembly is comparatively simple, which can refer to the disassembly process of the gearshift mechanism assembly. Remember to check the amount of parts to prevent neglected installation. Please refer to Figure 25 for tightening torque of the bolt.

Downloaded from www.Manualslib.com manuals search engine

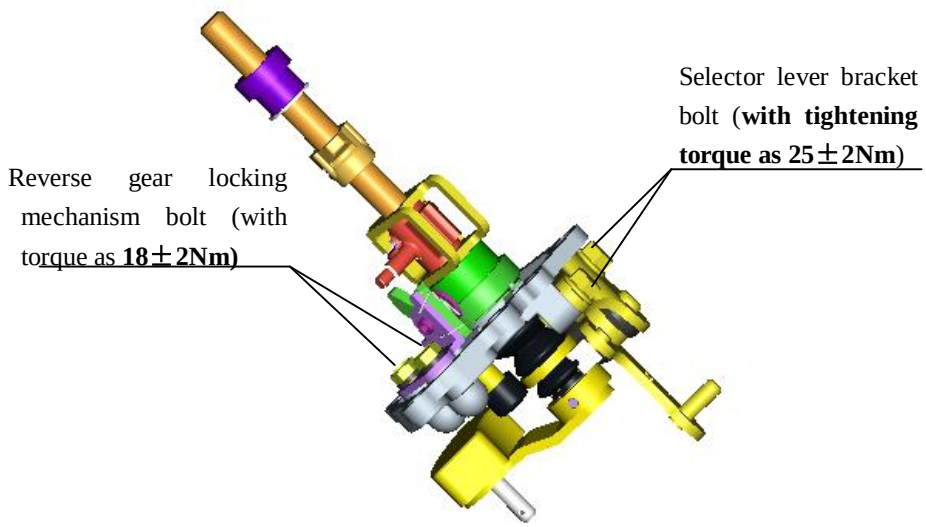

Figure 25

5. Assembly of gearshift fork assembly

Assembly of gearshift fork assembly is comparatively simple, which can be assembled with reference to the disassembly drawing.

6. Regulation and assembly of input shaft assembly

Place the input shaft with its end with clutch spline down, and then set the third gear needle bearing applied with the gear oil of the same designation as that used inside the transmission assembly onto the input shaft. Set the third gear driving gear assembly in from upside of input shaft with the end with synchronizer cone of the gear assembly up, and then check and make sure that the gear assembly can rotate freely. Set a 3/4/5 gears synchronizer ring in from upside of input shaft with conical surface of the synchronizer ring applied with the gear oil of the same designation as that used inside the transmission assembly, and then check and make sure that the synchronizer ring should envelop loosely on synchronizer cone of the third gear driving gear assembly and can rotate relative to the synchronizer cone. Press 3/4 gears synchronizer assembly onto the input shaft with the end surface of gear hub with two oil grooves down, turn the synchronizer ring to make its guide block completely enter the groove corresponding to the gear hub, and then make sure that the synchronizer ring is not locked. Fit front snap ring of input shaft; when fitting, try to use the thicker snap ring, if really unsuitable, select the snap ring of next thinner level, and then check if the snap ring has really enter the groove with the clearance between the snap ring and the groove not exceeding 0.05mm. Set a 3/4 gears needle bearing applied with the gear oil of the same designation as that used inside the transmission assembly onto the input shaft from upside of the input shaft. Set a 3/4/5 gears synchronizer ring applied with the gear oil of the same designation as that used inside the transmission assembly in from upside of the input shaft. Set the fourth gear driving gear assembly in from upside of input shaft with the end with synchronizer cone of the gear assembly down (the guide block of 3/4 gears synchronizer ring should completely enter the groove corresponding to the gear hub), and then make sure that the gear assembly can

Downloaded from www.Manualslib.com manuals search engine

rotate freely. Set friction ball of gear, fender and clamp in from upside of input shaft, and then perform axial orientation for the fourth gear driving gear. Set fifth gear needle bearing applied with the gear oil of the same designation as that used inside the transmission assembly onto the input shaft from upside of the input shaft. Set fifth gear driving gear assembly in from upside of input shaft with the end with synchronizer cone of the gear assembly up, and then make sure that the gear assembly can rotate freely. Set a 3/4/5 gears synchronizer ring in from upside of input shaft with conical surface of the synchronizer ring applied with the gear oil of the same designation as that used inside the transmission assembly, and then check and make sure that the synchronizer ring should envelop loosely on synchronizer cone of the fifth gear driving gear assembly and can rotate relative to the synchronizer cone. Press fifth gear synchronizer assembly onto the input shaft with the end surface of gear hub with oil groove down, turn the synchronizer ring to make its guide block completely enter the groove corresponding to the gear hub, and then make sure that the synchronizer ring is not locked. Fit rear snap ring of input shaft; when fitting, try to use the thicker snap ring, if really unsuitable, select the snap ring of next thinner level, and then check if the snap ring has really enter the groove with the clearance between the snap ring and the groove not exceeding 0.07mm. Simultaneously press front and rear bearings of input shaft onto the input shaft with the side of front bearing of input shaft having word down and the side of rear bearing of input shaft having word up, and then check and make sure that the outer rings of the bearings can rotate freely. Refer to Figure 26.

Note: There are two friction balls between the bearing baffles (2 sheets). Be careful to install them in full.

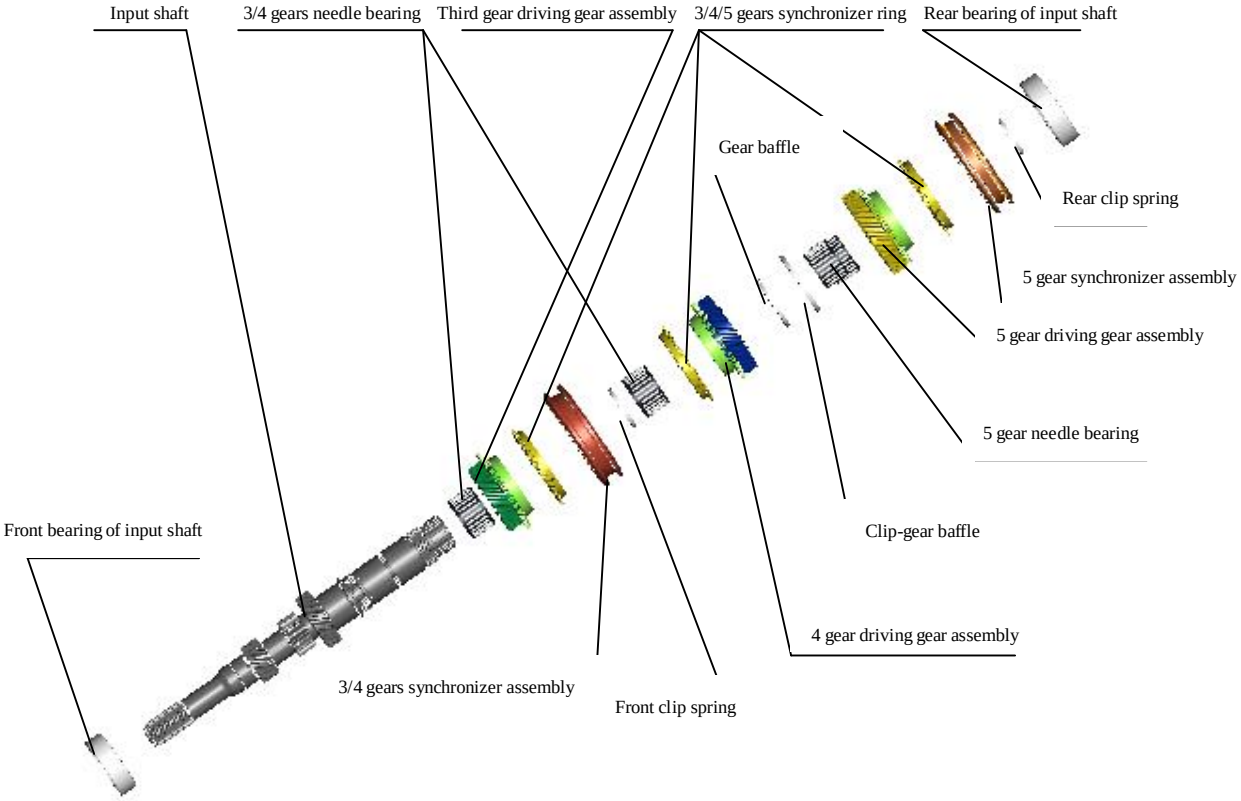

Downloaded from www.Manualslib.com manuals search engine

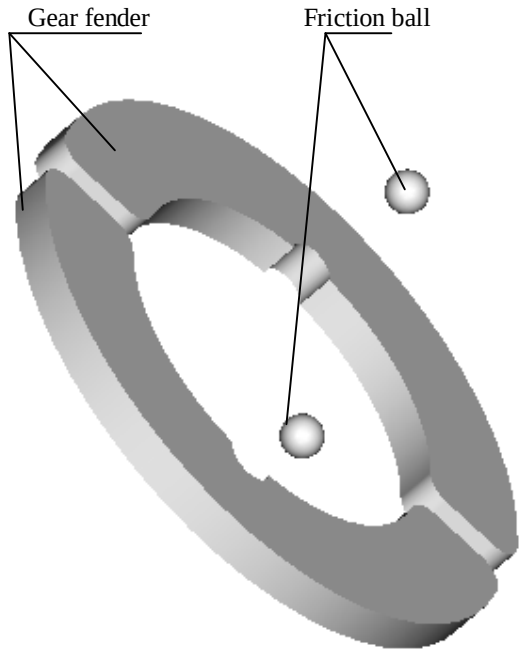

Figure26

7. Regulation and assembly of output shaft assembly

With the end of output shaft with driving gear of main decelerator down, set first gear needle bearing in onto output shaft from upside of the output shaft; before installation of the needle bearing, apply the gear oil of the same designation as that used inside the transmission assembly on it. Set first gear driven gear assembly in from upside of output shaft with the end with synchronizer cone of the gear assembly up, and then check if the gear assembly can rotate freely. Set a 1/2 gears synchronizer ring assembly in from upside of output shaft and the three finger jaws of balking ring of the synchronizer ring should completely enter the three corresponding grooves on the first gear driven gear assembly; before installation of the synchronizer ring assembly, apply the gear oil of the same designation as that used inside t Clamp-gear fender ıbly on three conical surfaces of the sync 3/4 gears synchronizer assembly that the syncnronızer rıng assembly envelops loosely on the synchronizer cone of the first gear driving and driven gears assembly and can turn a certain angle relative to the synchronizer cone. Press 1/2 gears synchronizer assembly onto the input shaft with the end of external gear of 1/2 gears hub sleeve wit the synchronizer ring to make its guide block completely enter the groove correspon Front snap ring , and then make sure that the synchronizer ring is not locked. Fit front snap ring of output shaft; when fitting, try to use the thicker snap ring, if really unsuitable, select the snap ring of next thinner level, and then check if the snap ring has really enter the groove with the clearance between the snap ring and the groove not exceeding 0.05mm. Set a 1/2 gears synchronizer ring assembly in from upside of output shaft; before installation of the synchronizer ring assembly, apply the gear oil of the same designation as that used inside the transmission assembly on three conical surfaces of the synchronizer ring. Set a second gear needle bearing onto output shaft from upside of

Downloaded from www.Manualslib.com manuals search engine

the output shaft; before installation of the needle bearing, apply the gear oil of the same designation as that used inside the transmission assembly on it. Set second gear driven gear assembly in from upside of output shaft with the end with synchronizer cone of the gear assembly down (the three grooves on the gear assembly should completely envelop the three corresponding finger jaws on 1/2 gears synchronizer cone), and then check and make sure that the gear assembly can rotate freely. Set the third gear driven gear in from upside of output shaft with the end with boss of the gear up, and then check and make sure that the 1/2 gears synchronizer ring assembly is not locked. Set 3/4 gears driven gear bush and then fourth gear driven gear in from upside of output shaft, with the end with boss of the gear down. Set fifth gear driven gear in from upside of output shaft with the end with boss of the gear up. When fitting, try to use the thicker snap ring, if really unsuitable, select the snap ring of next thinner level, and then check if the snap ring has really enter the groove with the clearance between the snap ring and the groove not exceeding 0.05mm. Simultaneously press inner rings of front and rear bearings of output onto the output shaft. See Figure 27.

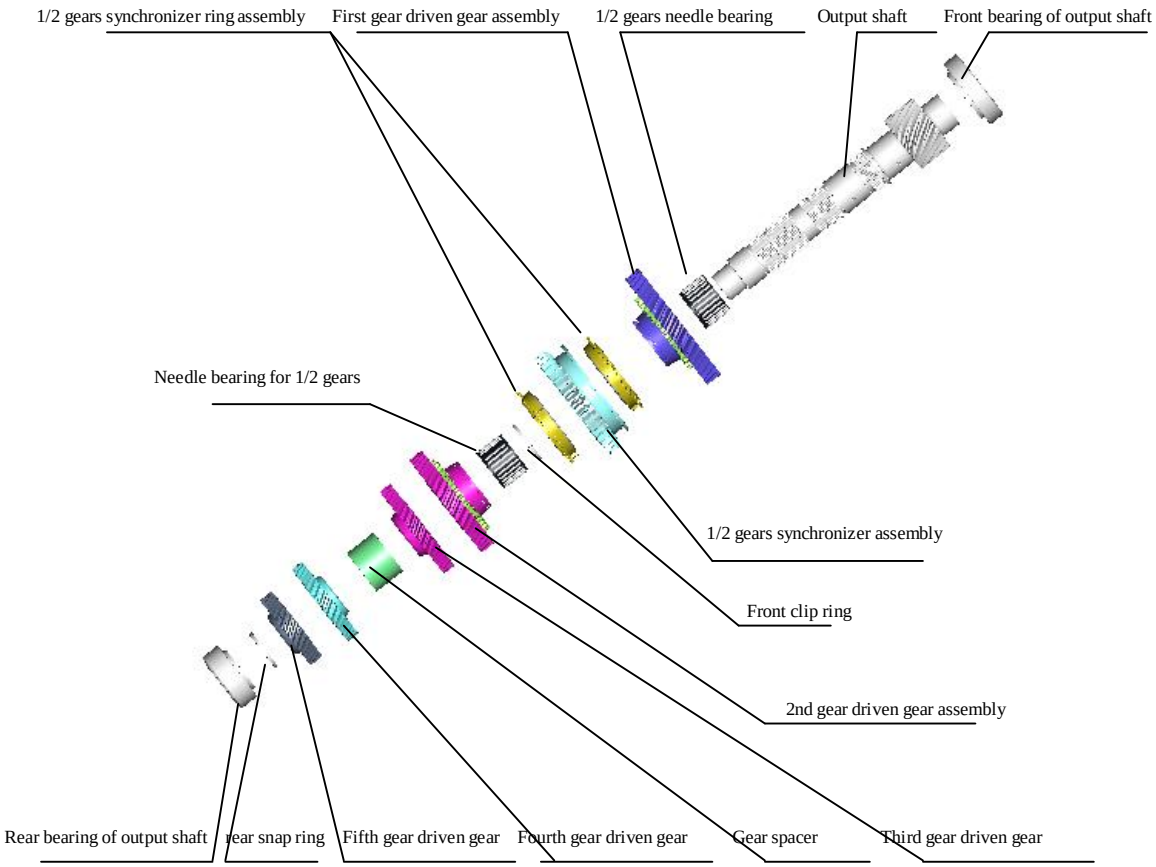

Figure 27

Downloaded from www.Manualslib.com manuals search engine

8. Assembly and regulation of transmission assembly

Place the clutch as shown in Figure 28 first, and then assemble the differential assembly to its designated position.

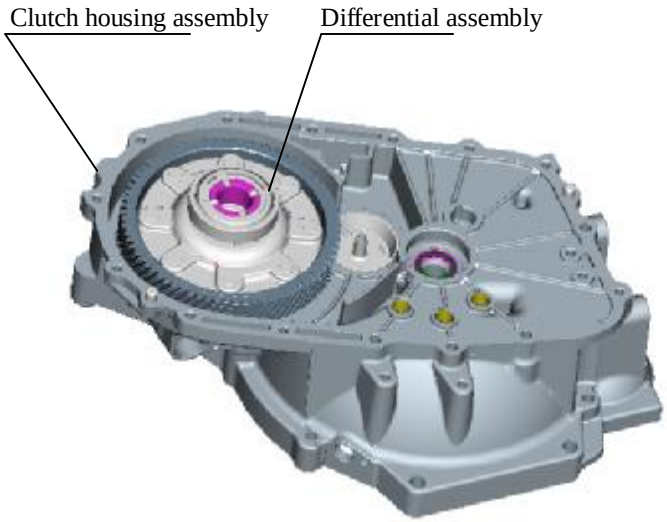

Figure 28

Assemble gearshift fork assembly, input shaft assembly and output shaft assembly together as shown in Figure 29, and then install them together onto clutch housing assembly. When assembling, wrap front end spline of input shaft with polyvinyl chloride adhesive tape to prevent damage to oil seal. After installation, turn each gear to ensure favorable engagement.

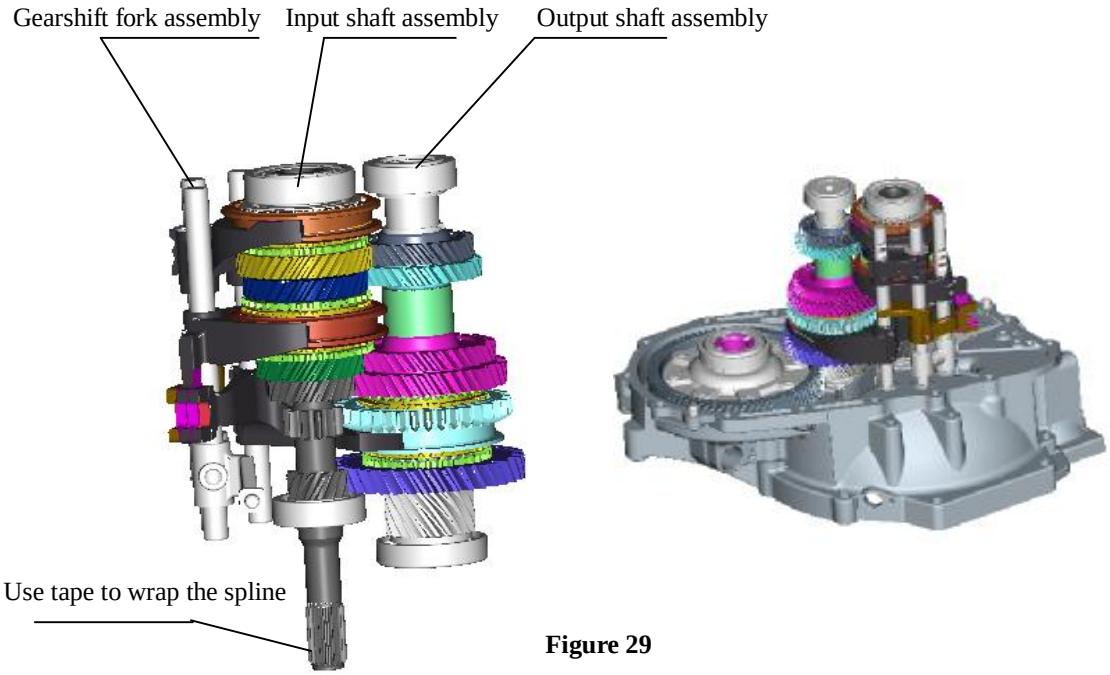

Figure 29

Downloaded from www.Manualslib.com manuals search engine

Install the assembled idler assembly (assembly of idler assembly is comparatively simple, please refer to its disassembly process) onto clutch housing, and then install reverse gear fork mechanism assembly with tightening torque of the two reverse gear rocker arm bracket bolts as **25±2Nm**. Clean the junction part of clutch and transmission housings and apply sealant (oil resistance silicone sealant, HZ1213Q/320222 YAP02-92) on it, and then install the magnet. See Figure 30.

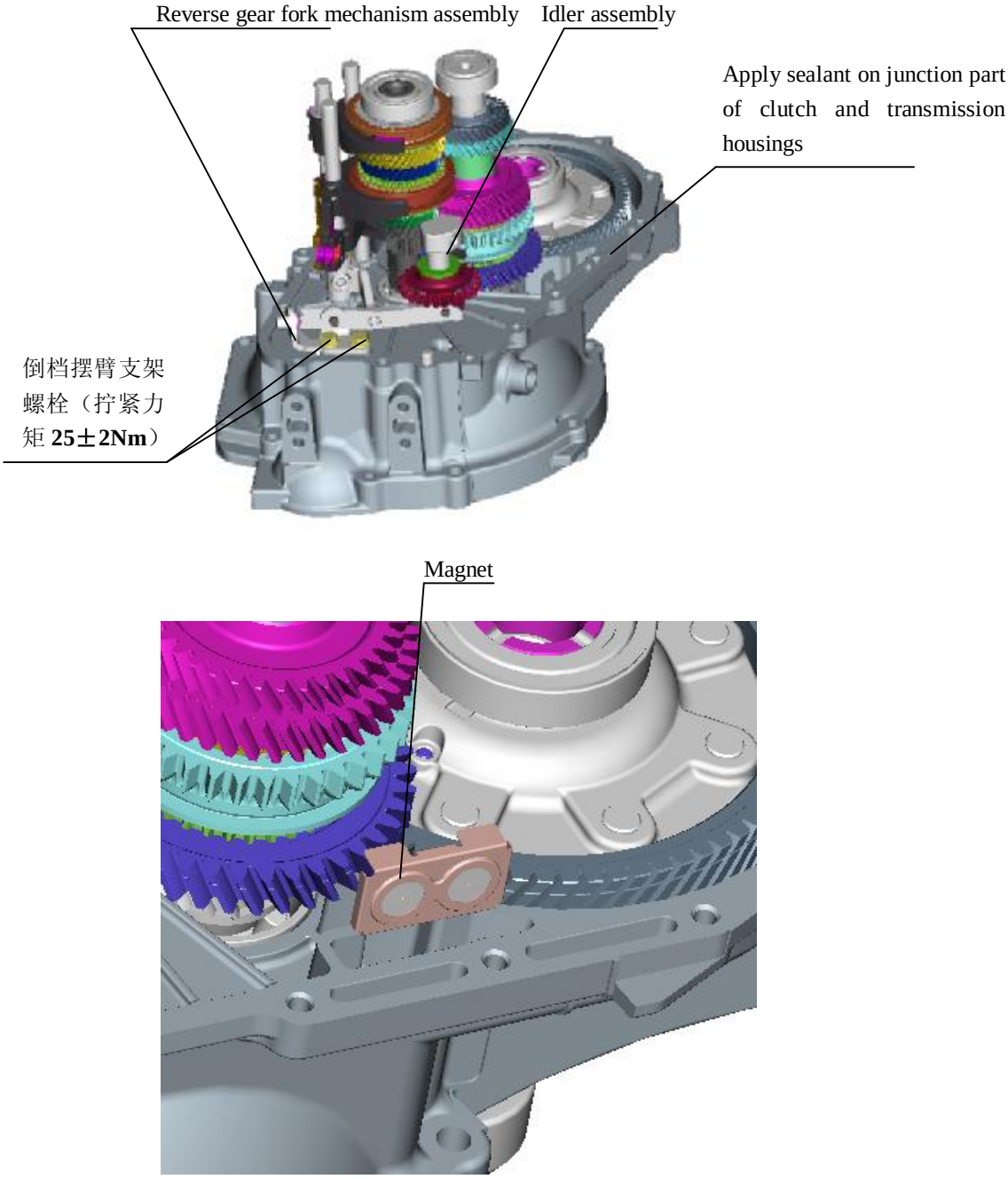

Figure 30

Downloaded from www.Manualslib.com manuals search engine

Assemble transmission housing and clutch housing together and then fasten them with connecting bolts. Before fastening, apply **thread locking glue (262 type anaerobic adhesive)** on the bolts properly. Tighten the diagonal bolts first as possible to ensure favorable fastening and sealing effects, and the tightening torque for the bolts are **25±2Nm**. **Note: the two connecting bolts at oil drain hole are a little longer than other connecting bolts, and the bracket should be installed first.** See Figure 31.

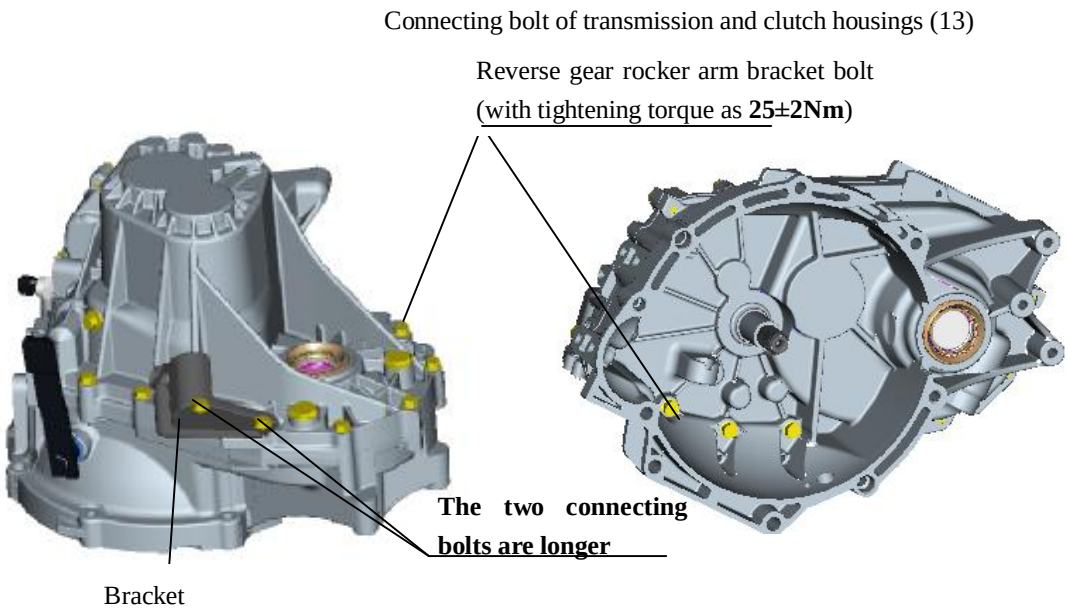

Figure 31

To install the assembled gearshift mechanism assembly onto the transmission, clean the junction part of gearshift housing and transmission housing and apply sealant on it (oil resistance silicone sealant, HZ1213Q/320222 YAP02-92), align one end of gearshift shaft with the linear bearing inside the transmission and align the locating hole on gearshift housing with the locating pin on transmission housing, and then tighten the connecting bolts of gearshift housing and transmission housing with the tightening torque as **25±2Nm**. See Figure 32.

Downloaded from www.Manualslib.com manuals search engine

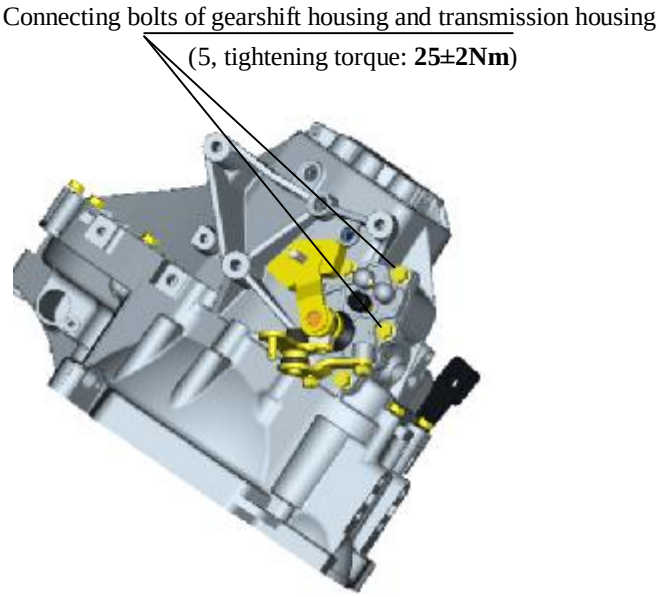

Figure 32

9. Disassembly of external accessories of transmission

Respectively install locating seats of 1/2 gears fork shaft and 3/4/5 gears fork shaft. Before installation, apply **thread fastening glue (262 type anaerobic adhesive)** on the thread, and the tightening torque for the bolts are **20±2Nm**. **Note: the locating seat of 1/2 gears fork shaft is longer than that of 3/4/5 gears fork shaft.** Then install locating seat of gearshift shaft, before installation, apply **thread fastening glue (262 type anaerobic adhesive)** on the thread, and the tightening torque for the bolts are **32±2.5Nm**; and install backup lamp switch assembly, before installation, apply **thread fastening glue (262 type anaerobic adhesive)** on the thread, and the tightening torque for the bolts are **20±2Nm.** See Figure 33**.**

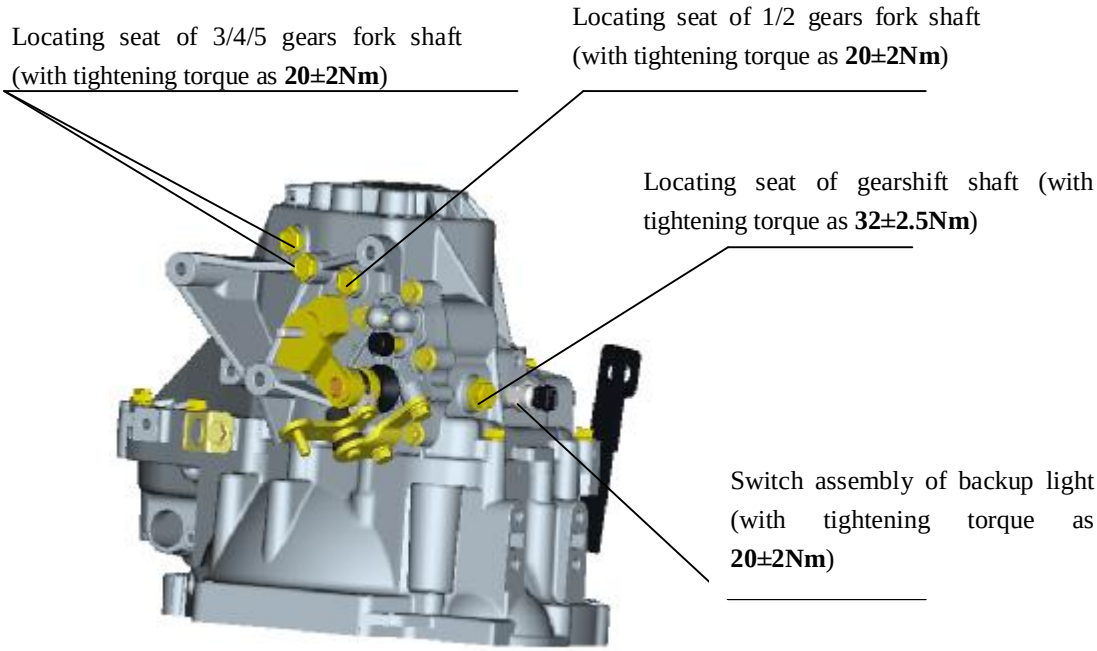

Downloaded from www.Manualslib.com manuals search engine

Figure 33

Follow by installation of screw of reverse gear idler shaft. Align the screw of reverse gear idler shaft with the threaded hole on the idler shaft, and then tighten it with the tightening torque as **38±2.5Nm**; after that, tighten bleeding plug with tightening torque as **44±3Nm**; finally, install oil limit plug onto the transmission, but do not tighten it then. See Figure 34.

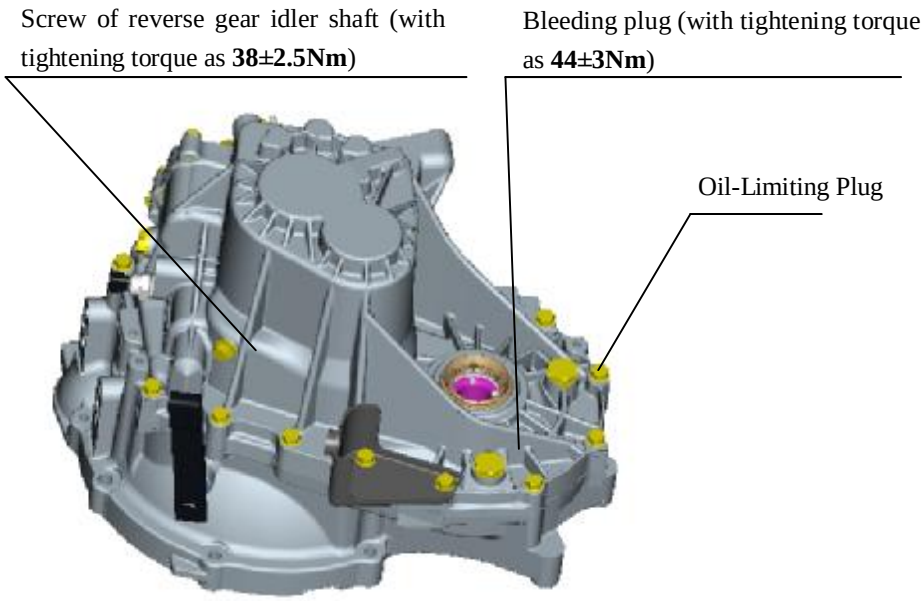

Figure 34

10. Refilling and volume regulation of transmission lubricant

After the transmission is installed onto the vehicle, park the vehicle on a flat road surface, then use the tool for refilling to refill transmission lubricant. The lubricant refilled should at least conform to API GL-4 SAE 75W-90 specification. Refill through installation hole of speed sensor as shown in Figure 35 with the refilling volume as 1.8L. after refilling, open the oil limit plug to regulate the lubricant to specified volume, and then tighten the oil limit plug with the tightening torque as **44±3Nm**.

Downloaded from www.Manualslib.com manuals search engine

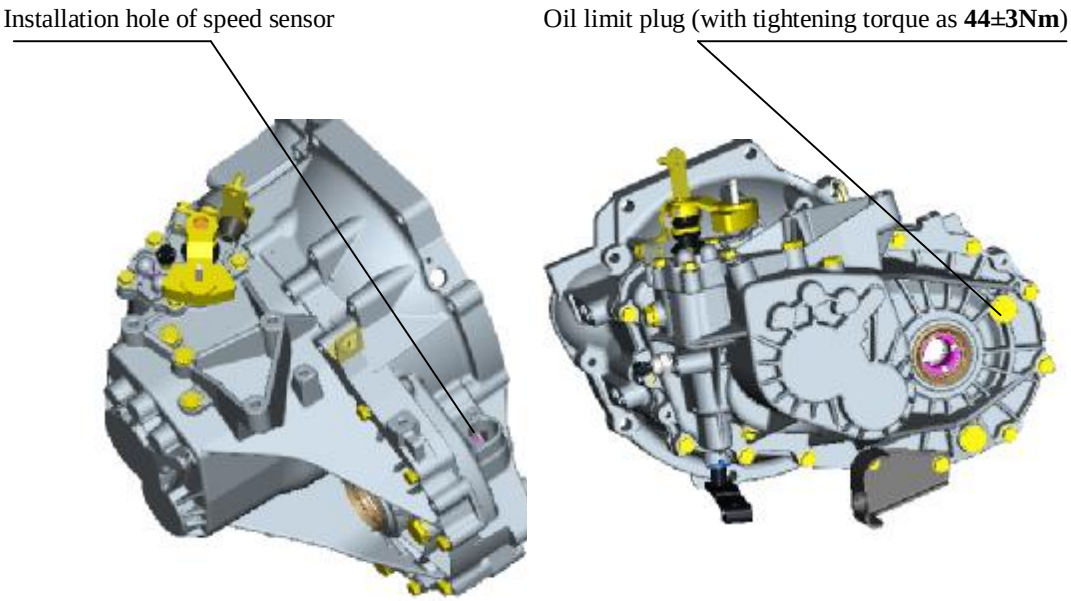

Figure 35

After the above steps, assembly and regulation to the transmission assembly are accomplished.

Downloaded from www.Manualslib.com manuals search engine

II. Tightening Torque Table for Fasteners

Position	Tightening torque (N.m)
Reverse gear rocker arm bracket bolt	25±2
Connecting bolts for clutch and transmission housings	25±2
Reverse gear idler shaft screw	38±2.5
Connecting bolts for gearshift and transmission housings	25±2
Gearshift shaft locating seat assembly	32±2.5
Reverse switch assembly	20±2
Fork shaft locating seats of gears	20±2
Bleeding\oil limit plug	44±3
Clutch release fork bolt	20±2
Clutch release arm bolt\nut	20±2
Selector Lever Bracket Bolt	25±2
Main decelerator driven gear bolt	130±5
Reverse gear lockup mechanism bolt	18±2

Downloaded from www.Manualslib.com manuals search engine

Chapter Four General Failures and Troubleshooting

Failure status	Possible reason	Troubleshooting
Excessive or abnormal noise	Damaged input or/and output shaft bearing(s)	Replace the bearing
	Gear tooth faces damaged due to knocking, burr or pit corrosion existing, or poor contact between them.	Repair or replace the gear
	Incorrect gear shaft position and clearance	Check and adjust
	Low oil level, insufficient lubrication	Fill oil to the specified level
	Foreign matter(s) existing in the assembly	Check and remove
Oil leakage	Excessively worn or damaged oil seal(s)	Replace
	Uneven sealant smearing or damaged seal gasket(s)	Replace the seal gasket(s) or sealant
	Failure to timely recondition junction surface(s) damage due to knocking	Check and repair
	Damaged differential bearing	Replace
Difficult to implement gear shift	Improper clutch adjustment and incomplete release.	Adjustment
	Improper gearshift transmission system adjustment or movement obstruction occurring	Check and adjust
	Synchronizer ring(s) fails to work	Replace
Gear jump	Worn synchronizer gear sleeve(s) or tooth cone surface(s) of gear junction	Replace related components
	Improper gearshift transmission system adjustment	Check and adjust
No gear	Loose gearshift transmission system	Overhauling
	Loose gearshift arm of transmission	Repair
Abnormally damaged bearing(s)	Metal impurities contained in transmission oil	Replace
	Insufficient lubrication or unqualified transmission oil	Replace
	Using of unqualified bearing(s)	Replace

Downloaded from www.Manualslib.com manuals search engine

Service Manual for Chery QQ6

(UMC EFI for 473F Engine)

After Sales Service Department of Chery
Automobile Sales Co., Ltd.

Downloaded from www.Manualslib.com manuals search engine

CONTENTS

CHAPTER ONE DISASSEMBLY AND INSTALLATION OF ELECTRONIC FUEL INJECTION SYSTEM 4

I. Disassembly and Installation of Components of Electronic Fuel Injection System 4

CHAPTER TWO PRINCIPLE OF ELECTRONIC FUEL INJECTION SYSTEM 6

I. Overhaul of System Components 6

1. Intake Air Temperature Pressure Sensor 6
2. Tachogenerator of Engine 8
3. Phase Sensor 10
4. Water Temperature Sensor 10
5. Knock Sensor 12
6. Electric Throttle Body 12
7. Oxygen Sensor 13
8. Fuel Pump Assembly 16
9. Injector 17
10. Ignition Coil 19
11. Spark Plug 21
12. Carbon Canister Solenoid Valve Control 22
13. Electronic Accelerator Pedal 24
14. Three-way Catalytic Converter 24
15. Fan Control 25
16. Position Sensor of Double Brake Pedal 26
17. Clutch Position Sensor 26
18. A/C Control 27

CHAPTER TWO FUNDAMENTAL PRINCIPLE FOR FAILURE DIAGNOSIS OF ELECTRONIC FUEL INJECTION SYSTEM 28

1. Failure Information Records 28
2. Failure State 28
3. Failure Types 28
4. Failure Frequency Counter 28
5. Limp Home 29
6. Failure Alert 29
7. Readout of Failure 29
8. Clearing Failure Information Records 30
9. Failure Locating 30
10. Failure Code Table 30
11. The Steps for Implementation of Failure Diagnosis According to Failure Information Records 35

11.1 Electronic Throttle Failure 35
11.2 Knock Sensor failure 36
11.3 Air Pressure Sensor Failure 37

Downloaded from www.Manualslib.com manuals search engine

11.4 Front Oxygen Sensor Failure 38
11.5 Rear Oxygen Sensor Failure 40
11.6. Coolant Temperature Sensor Failure 42
11.7 Failure in Driver Stage of Injector 43
11.8 Failure in Driver Stage of Canister Control Valve 44
11.9 Failure in Driver Stage of Malfunction Indicator Lamp (MIL) 45
11.10 Failure in Driver Stage of 1#, 2# Coils of Step Motor 46
11.11 Craftshaft Position Sensor Failure 47
11.12 Craftshaft Position Sensor Failure 48
11.12 Ignition Coil Failure 49
11.13 Accelerator Pedal Position Sensor Failure 50
11.14 Double Brake Swtich 51
11.15 Theft-proof Control System Failure 52
12. Steps for Implementation of Failure Diagnosis by Engine Symptom 53
12.1 Perform Preliminary Inspection First before Following the Steps for Implementation of Failure Diagnosis by Engine Symptom. 53
12.2 The Engine Does not Rotate or Rotates Slowly when Starting 55
12.3 When Starting, Engine Can be Dragged to Rotate but Can not Start with Success. ... 56
12.4 Warm Starting Difficulty 58
12.5 Engine Speed is Normal, but it is Difficult to Start at any Time. 60
12.6 Cold Starting Difficulty 62
12.7 Unsteady Idle Speed at Any Time 64
12.8 Unsteady Idle Speed during Warming up Process 66
12.9. Unsteady Idle Speed after Warming up 67
12.10 Unsteady Idle Speed or Extinguish with Load (A/C etc.) 69
12.11 Periodic Unsteadiness (Have to Perform Self-study again after ECU is Power off) 70
12.12 Too High Idle Speed (Have to Perform Self-study again after ECU is Power off) .. 72
12.13. Engine Revolution Speed is too Low or Flameout 73
12.14 Slow Response when Accelerating 75
12.15 Poor Performance and Disability when Accelerating. 77
12.16 Unable to Reach the Maximum Revolution when Accelerating 79
12.17 When Releasing Accelerator Pedal after Acceleration, Unsteady Idle Speed Occurs at Instant, even Extinguishes 81
12.18 A/C System Failure 83
13. Safety Precautions for System Maintenance 84
13.1 Safety Precautions for Diagnosis and Maintenance of Gasoline Injection Electronic Control System 84

Downloaded from www.Manualslib.com manuals search engine

Chapter One Disassembly and Installation of Electronic Fuel Injection System

I. Disassembly and Installation of Components of Electronic Fuel Injection System

1. Disassembly and installation of engine control unit (ECU).

2. Position and disassembly of intake air pressure sensor.

3. Position and disassembly of camshaft position sensor.

4. Remove fixing hoop of intake hose.

Downloaded from www.Manualslib.com manuals search engine

5. Remove the four fixing bolts of electronic throttle body.
Pull out the connector and take out the electronic throttle body.

6. Use a screwdriver to press down the fixed clip of the injection nozzle connector and then pull out the connector.

7. Use a screwdriver to press down the fixed clip of the knock sensor connector and then pull out the connector.

8. The water temperature sensor is behind the thermostat seat.

9. Pull out the connector of the ignition primary coil by hand.

10. Pull out the connector of the engine tachogenerator by hand.

Downloaded from www.Manualslib.com manuals search engine

Chapter Two Principle of Electronic Fuel Injection System

I. Overhaul of System Components

1. Intake Air Temperature Pressure Sensor

1.1 Function of the sensor:

Detect air intake pressure and temperature in air intake manifold, which will be provided to ECU as main load signal of engine; ECU will calculate injection pulse-width based on this signal.

1.2 Principle of the sensor:

Intake air temperature pressure sensor is a sensor that integrates an intake air pressure sensor and an intake air temperature sensor. Absolute pressure sensor element of intake manifold is composed of a silicon chip. A pressure diaphragm is etched on the silicon chip. On the pressure diaphragm, there are 4 piezo-resistances, which serve as strain sensors and constitute a Wheatstone bridge. In addition to this pressure diaphragm, a signal processing circuit is also integrated on the silicon chip. The silicon chip and a metal housing constitute a closed reference, where the absolute pressure of the gas inside approaches to zero. Thus, a micro-electronic mechanical system is formed. The active face of the silicon chip stands a pressure close to zero, while its back face stands the pending measuring intake manifold absolute pressure introduced by a connecting pipe. The thickness of the silicon chip is merely several μm, so the absolute pressure change in intake manifold will bring mechanical deformation to the silicon chip. The 4 piezo-resistances will accordingly deform and their resistances also change. The voltage signal in linear relation to the pressure is formed after process by the signal processing circuit on the silicon chip. The intake temperature sensor element is a negative temperature coefficient (NTC) resistance, which will change with the intake temperature. This sensor sends out a voltage indicating the intake temperature change to the controller.

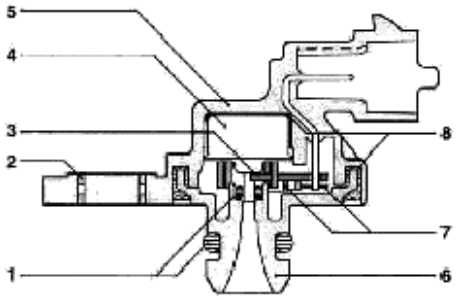

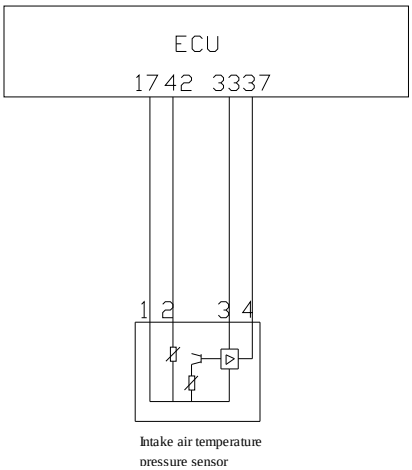

Cross-section view for sensor of air absolute pressure and temperature in intake manifold

1 Gasket 2 Stainless Steel Sleeve 3 PCB Board 4 Sensing Element 5 Housing 6 Pressure Bracket 7 Soldering 8 Bonded With Bonding Agent

Downloaded from www.Manualslib.com manuals search engine

1.3 Parameters of technical features

This sensor is designed to be mounted on the plane of auto engine intake manifold. The pressure connecting pipe together with the temperature sensor protrudes inside the intake manifold and an O gasket is used to enable atmosphere-proof.

If it is mounted on an auto through an appropriate method (picks up pressure from the intake manifold and the pressure connecting pipe tilts down etc.), it can be ensured that no condensed water will be formed on the pressure-sensitive element.

Drilling and fixing on the intake manifold must be carried out according to the supply drawing so as to ensure a long seal and a good tolerance to fretting by agent.

The reliable contact of electric connection of a joint will mainly be affected by the joints of components and parts, and it is also in relation to the material quality and dimensional precision of the joint fitted with it on the harness.

1.4 Failure effects and judgment method

- Failure effects: spark extinction and poor idling etc.
- General Failure Reason:

  1. Abnormal high voltage or inverse strong current occur during working;
  2. The vacuum element is damaged during maintenance.
- Maintenance precautions: during maintenance, impinge using high pressure gas toward the vacuum element is prohibited; when replacing the sensor after a failure is found, remember to check if output voltage and current of the generator is normal.
- Simple measurement method:

1.4.1 Temperature sensor:

With the joint removed, turn the digital multimeter to Ohm shift, and then connect the two meter pens respectively to 1# and 2# pins of the sensor; At 20℃, the rated resistance should be 2.5 kΩ±5%, and the other corresponding resistances can be measured out from the characteristic curve in above chart. Analogue method can also be used when measuring, i.e., use an electric drier to blow the sensor (be careful not to be too close to the sensor), and then observe the change of the sensor resistance. At this point, the sensor resistance should fall.

1.4.2 Pressure sensor:

With the joint connected, turn the digital multimeter to DC Voltage shift, and then connect the black pen to ground while the red pen respectively to 3# and 4# pins. Under idle speed state, 3# pin should have a 5V reference voltage while the voltage on 4# pin should be around 1.3V (the actual value depends on the model); Under no load state, when opening the throttle slowly, the voltage on 4# pin may change little; when opening the throttle rapidly, the voltage on 4# pin may reach around 4V instantly (the actual value depends on the model) and then fall to around 1.5V (the actual value depends on the model).

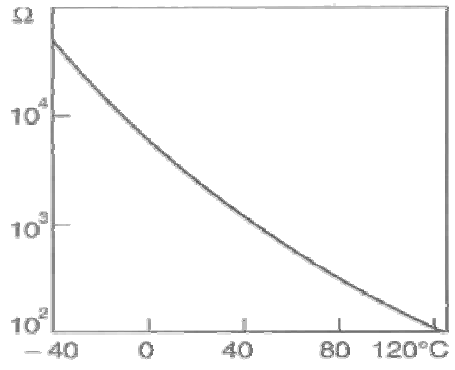

Downloaded from www.Manualslib.com manuals search engine

2. Tachogenerator of Engine

2.1 Function of the sensor:

As one of the uppermost sensors of engine, the tachogenerator of engine provides ECU with rev signal, acceleration signal and crank angle signal etc. of engine. ECU will calculate injection pulse-width, injection time and ignition timing through these signals and provide the instruments with rev signal of engine.

2.2 Principle of the sensor:

The inductive tachogenerator work together with pulse disc, it is used in ignition system without distributor providing engine speed and crank shaft top dead center information.

Inductive tachogenerator is made up of a permanent magnet and coil outside of magnet.

Pulse disc is a tooth disc with 60 teeth originally but there are two teeth opening. Pulse disc is assembled on crank shaft and rotate with crankshaft. When the tooth tip passes through closely the end of the inductive engine tachogenerator, the pulse disc made of the ferromagnetic material will cut the line of magnetic force of the permanent magnet in the inductive engine tachogenerator to generate inductive voltage in the coil as engine speed signal output.

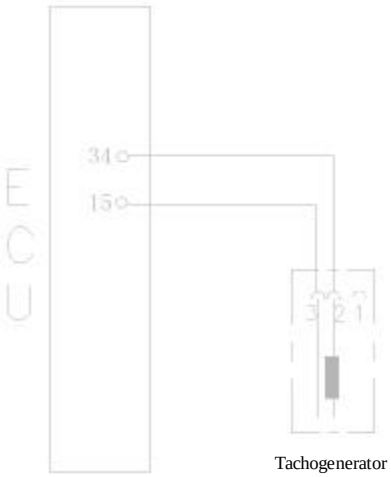

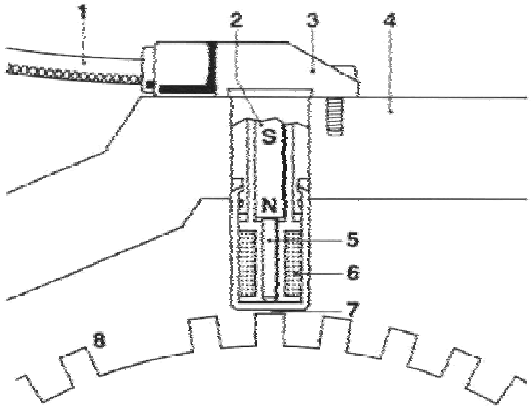

1. Shielded wire
2. Permanent magnet
3. Housing of sensor
4. Installation bracket
5. Soft magnet core
6. Coil
7. Air gap
8. 60-2 gear ring

Downloaded from www.Manualslib.com manuals search engine

2.3 Parameters of technical features

Item	Value			Unit
	Min.	Typical	Max.	
Resistance under a room temperature of 20 ℃	774	860	946	W
Inductance	310	370	430	mH
Output voltage at a crankshaft revolution of 416rpm	>1650			mV

2.4 Installation attentions:

- For the inductive tachogenerator, it is permitted to take out from its pack before it is assembled to the auto or testing device right away.
- Inductive tachogenerator is assembled by press in method but not hammer tapping.
- Partly micro-encapsulated bolt M6´12 for fixing of the inductive engine tachogenerator is recommended.
- The tightening torque is 8±2Nm.
- Gas clearance between inductive tachogenerator and pulse disc tip is **0.8-1.2mm**.

Dimension d (see the figure below): 4.7mm.

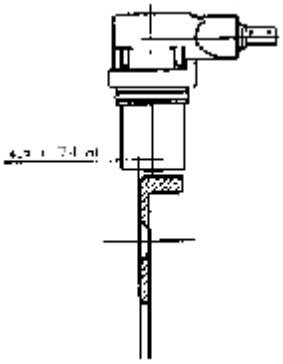

Installation of the tachogenerator

2.5 Failure effects and judgment method:

- Failure effects: start failure etc.
- General cause of the failure: man induced failure.
- Maintenance precautions: during maintenance, the tachogenerator should be installed by using press-in method instead of hammering method.
- Simple measurement method:

1. With the joint removed, turn the digital multimeter to Ohm shift, and then connect the two meter pens respectively to 2# and 3# pins; At 20℃, the rated resistance should be 860Ω±10%.

2. With the joint connected, turn the digital multimeter to AC Voltage shift, and then connect the two meter pens respectively to 2# and 3# pins of the sensor; start the engine and voltage output should be present at this point. (Inspection with vehicle oscilloscope is recommended).

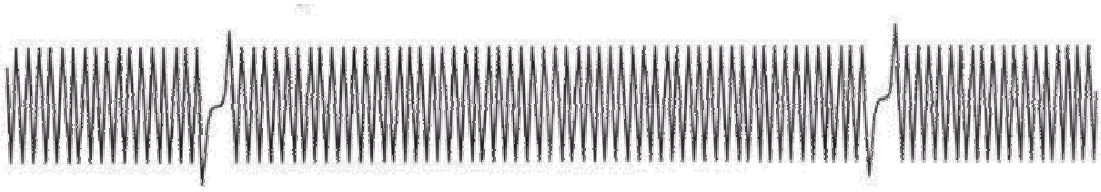

Oscillogram in Test

Downloaded from www.Manualslib.com manuals search engine

3. Phase Sensor

3.1 Function of the sensor:

Provide ECU with phase signal, i.e. help crankshaft position sensor of engine to judge it is then at compressing top dead center or air exhaust top dead center.

3.2 Principle of the sensor:

The phase sensor is consisted of the Hall generator installed on the valve cover and the signal wheel machined on the intake camshaft. When the camshaft rotates, the signal wheel will make the magnetic flux passing the Hall generator change, thus generating a variable Hall signal.

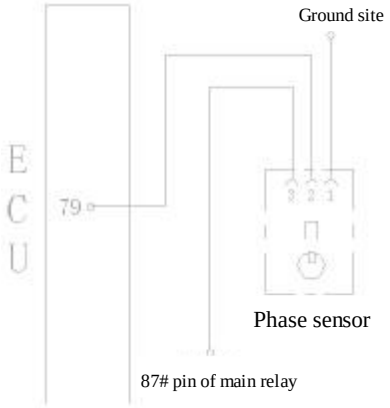

3.3 Effects and judgment method:

- Failure effects: over proof emission and fuel consumption rise etc.
- General cause of the failure: man induced failure.
- Simple measurement method:

(connect the joint) switch on ignition switch but do not start the engine; put digital multimeter on DC volt shift, connect two meter pen to No. 1 and No. 3 sensor connectors and make sure there is 12V reference voltage. Start the engine, check if it is in good conditions of No.2 pin by oscillograph on vehicle.

4. Water Temperature Sensor

4.1 Function of the sensor:

The water temperature sensor simultaneously provides ECU and instruments with water temperature signal. ECU will calculate and regulate injection pulse-width and ignition advance angle through water temperature signal. In addition, through water temperature signal, ECU also can control turn-on and turn-off of cooling fan to prevent engine from damage caused by overheat.

4.2 Principle of the sensor:

The water temperature sensor is a minus temperature coefficient type electric resistance model sensor; the higher the temperature is, the less the resistance will be. But, temperature rise and resistance fall are not in linear relation.

Downloaded from www.Manualslib.com manuals search engine

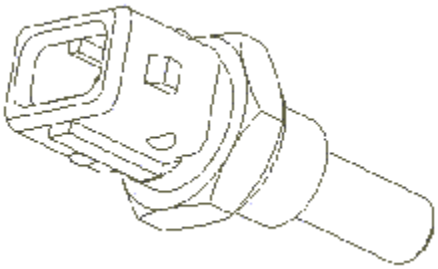

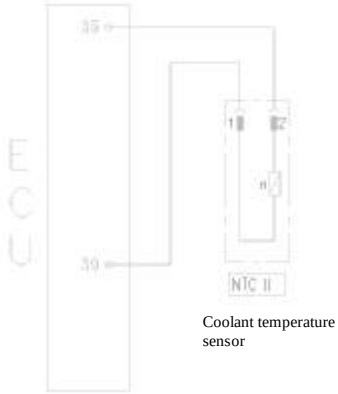

4.3 Parameters of technical features

(1) Data limit

Item	Value	Unit
Rated voltage	Can only be run by ECU	
Rated resistance at 20℃	2.5±5%	kW
Range of running temperature	-30 to +130	℃
Max. measuring current passing the sensor	1	mA
Permissible vibration acceleration	600	m/s^2

4.4 Installation attentions

Coolant temperature sensor is installed on the cylinder body and the copper heat conducted socket is inserted into coolant. There are thread on the socket, and screw in coolant temperature sensor onto the threaded hole on cylinder block by the hexagon head of the socket. The maximum permissible tightening torque is 15Nm.

4.5 Failure effects and judgment method

- Failure effects: starting difficulties etc.
- General cause of the failure: man induced failure.
- Simple measurement method:

With the joint removed, turn the digital multimeter to Ohm shift, and then connect the two meter pens respectively to 1# and 2# pins of the sensor; At 20℃, the rated resistance should be 2.5kΩ±5% and the others can be measured out from the characteristic curve in above chart. Analogue method can also be used when measuring, i.e., dip the working area of the sensor in boiled water (dip for adequate time), observe the resistance change of the sensor, at this point, the resistance should fall to 300Ω-400Ω(the actual value depends on the temperature of the boiled water).

Downloaded from www.Manualslib.com manuals search engine

5. Knock Sensor

5.1 Function of the sensor:

The knock sensor provides ECU with knock signal. When the engine generates knock, ECU will control to gradually reduce ignition advance angle to eliminate the knock; when no knock occurs during certain strokes, ECU will gradually increase ignition advance angle to enable the engine to obtain max. torque.

5.2 Principle of the sensor:

Knock sensor is a kind of vibrating acceleration sensor and is assembled on cylinder block. Either single or multiple can be installed. The sense organ of the sensor is a piezoelectric element. The vibration of cylinder block is transferred to piezoelectric crystal by mass block inside of sensor. The piezoelectricity crystalloid gets pressure from mass block vibration, producing voltage on two polar and transferring vibration signals to voltage signal and output it. See the following frequency response characteristic curve. Because the frequency of knock vibration signal is much higher than the normal engine vibration signal, the ECU can separate the signal into knock signal and non-knock signal.

5.3 Attentions

Knock sensor has a hole in the middle, through which it is fastened on the cylinder by a M8 bolt. For the aluminum alloy block, using long bolt with 30 mm; for the casting iron, using 25mm bolt. The tightening torque is 20±5Nm. The installation position should ensure that the sensor is liable to receive vibration signals from all cylinders. Decide the optimal installation position of knock sensor through modal analysis to the engine body. Generally, for a 4-cylinder engine, the knock sensor is installed between 2# cylinder and 3# cylinder; for a 3-cylinder engine, it is installed at the center of 2# cylinder. Do not let liquid such as engine oil, coolant, brake fluid and water etc. contact the sensor long. Use of gasket of any type is not allowed in installation. The sensor must cling to the cylinder tightly through its metal surface. During wiring of sensor signal cables, do not make the signal cables resonate; otherwise, they may break. Be sure to prevent turning on of high voltage between 1# and 2# pins of the sensor; otherwise, damage to the piezoelectric element may occur.

5.4 Effects and judgment method

Failure effects: poor acceleration etc.

- Reasons for general failures: long time contact of liquid such as engine oil, coolant, brake fluid and water etc. with the sensor, which may corrode the sensor.
- Maintenance precautions: (see installation attentions)
- Simple measurement method: (remove the joint) put digital multimeter at ohm shift, and contact the No. 1, No. 2 and No. 3 pin with its two meter pens. The resistance value should be more than 1MΩ, under normal temperature. Leave the digital multimeter at millivolt shift, and tap around the sensor using little hammer, there should be voltage signal output.

6. Electric Throttle Body

6.1 Function:

Downloaded from www.Manualslib.com manuals search engine

The electronic throttle body can automatically open or close the throttle according to the driver's will to apply the accelerator pedal to let the engine work under the corresponding operating mode. The electronic throttle has cancelled the conventional throttle guy and the opening of throttle is controlled by ECU based on the signal from accelerator pedal and other signals (such as A/C, power assisted steering, back and gearshift etc.) through an electronic step motor inside the electronic throttle body. In addition to cancel of conventional idle speed by-pass and idle speed step motor, there are also throttle position sensors on the electronic throttle body to feed back the opening of the throttle. This suite of throttle position sensor is different from the common one; totally two suites of throttle position sensors are installed inside the electronic throttle body to monitor rationality of the signals from the latter; when any problem occurs in a certain signal, ECU can still use the other suite of signals to work on.

6.2 Working principle:

The throttle driving motor is a micro motor, which is composed of multi steel stators in a circle and a rotor, with one coil on each steel stator. The rotor is a permanent magnet with a nut at its center. All stators coils are constantly power on. As long as the direction of current of one coil is changed, the rotor will turn a certain angle. When the directions of current of all stator coils is changed in a proper order, a rotating magnetic field is formed, which will drive the rotor made from permanent magnet rotate along a certain direction. Its principle is just that of a micro direct current motor.

This motor drives a suite of special gear reducing mechanism and a bidirectional spring; when the system is under power off condition, this mechanism can ensure that the opening of throttle valve plate maintains at a safe position where is bigger than that for idle speed but not too high, so that the vehicle can continue to run; if engine ECU has entered this failure mode, when applying the accelerator pedal, the valve plate of the electronic throttle body will no longer act.

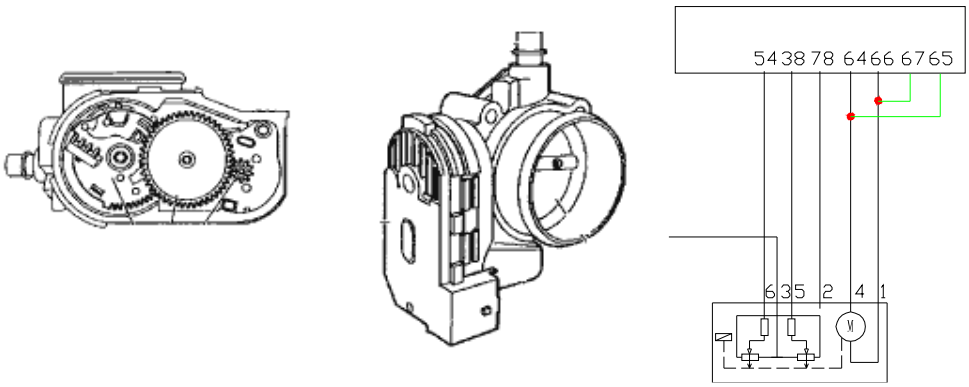

Electronic throttle

6.3 Failure diagnosis:

ECU can monitor short-circuit and break of coil of the throttle driving motor, and light the engine failure light in case of such failure to let the engine enter failure mode, when the engine fails to accelerate, has very poor driving performance and needs maintenance immediately.

7. Oxygen Sensor

7.1 Function of the sensor:

Oxygen sensor is one of the principal sensors on modern autos; it can feed back the mixture strength by detecting oxygen content in exhaust gas. ECU will correct the mixed gas based on the

Downloaded from www.Manualslib.com manuals search engine

signals fed back by the oxygen sensor, i.e. control injection pulse-width to let the mixed gas always maintain an approximately ideal air-fuel ratio (14.7:1).

7.2 Principle of the sensor:

Sensing element of oxygen sensor is a kind of ceramic tube with holes, and outside of tube walls are surrounded by engine exhaust gas and inside is air. Ceramic sensor element is a kind of solid state electrolyte with electrical heating tube inside (as shown in the figure).

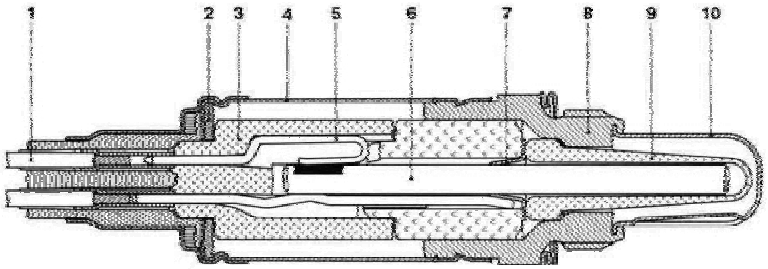

Cross-section view of oxygen sensor

1. Cable 2. Dish washer 3. Insulation bush 4. Protective bush
5. Clamp fitting of heating element 6. Heating rod 7. Contact pad
8. Sensor seat 9. Ceramic probe 10. Protection sleeve

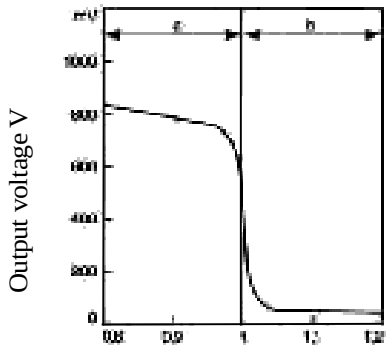

Characteristic Curve of oxygen sensor at 600 ℃

The operation of the oxygen sensor is achieved by converting the concentration difference of oxygen ion between inside and outside of the ceramic sensor element to the voltage signal output. It bears the characteristic of solid electrolyte once the temperature of the ceramic sensor element reaches 350℃. Because of the particularity of its materials, the oxygen ion can pass the ceramic sensor element freely. Taking advantage of this characteristic, the concentration difference will be converted to electric potential difference to form electric signal output. If the mixed gas is comparatively thick, the oxygen ion thickness difference between inside and outside of the ceramic tube will be higher and the potential difference will also be higher, then a mass of oxygen ion will move from inside to outside, so, the output voltage is comparatively high (close to 800mV-1000mV); If the mixed gas is comparatively thin, the oxygen ion thickness difference between inside and outside of the ceramic tube will be smaller and the potential difference will also be smaller, then just a few of oxygen ion will move from inside to outside, so, the output voltage is comparatively low

Downloaded from www.Manualslib.com manuals search engine

(close to 100mV). The signal voltage will mutate near theoretical equivalent air-fuel ratio (λ=1), see the figure above.

Every oxygen sensor bears a cable and the other end of the cable is the wire connector. The wire connector of oxygen sensor produced by our company has four pins:

No.1 connects to the positive pole of heater power supply (white);

No.2 connects to the negative pole of heater power supply (white);

No.3 connects to signal negative pole (gray);

No.4 connects to signal positive (black).

7.3 Parameters of technical features

- The requirement to exhaust pipe: the segment of exhaust pipe in the area before the oxygen sensor must be heated up rapidly. If possible, the exhaust pipe should be designed to be tilting down to avoid accumulation of condensed water in front of the oxygen sensor.
- Do not inappropriately heat up the metal snap ring of the cable at oxygen sensor side, especially after the engine is shut down.
- Do not apply purge fluid, oiliness fluid or volatile solid on connector of the oxygen sensor.
- The screw thread of the oxygen sensor is M18 ´1.5.
- The size of the hexagonal head wrench for the oxygen sensor is 22-0.33.

The tightening torque for the oxygen sensor is 40-60Nm.

7.4 Failure effects and judgment method

- Failure effects: poor idling, poor acceleration, over proof tail gas and excessive fuel consumption etc.
- General causes of the failure:

1. Moisture entering inside of sensor, and when the temperature is changed, the pin will be broken;

2. The oxygen sensor “intoxicates”. (Pb, S, Br, Si)

Maintenance precautions: application of cleaning fluid, oiliness fluid or volatile solid on the oxygen sensor during maintenance is prohibited.

- Simple measurement method:

1. Remove joint, put digital multimeter to ohm shift, connect meter pen to No.1 (white) and No.2 (white) pins of the sensor. The resistance value is 1~6**W** at constant temperature.

2. With the joint connected, under idle speed state, when the working temperature of the oxygen sensor reaches 350℃, turn the digital multimeter to DC Voltage shift and connect the two meter pens respectively to 3# (gray) and 4# (black) pins; at this point, the voltage should fluctuate rapidly between 0.1-0.9V.

Downloaded from www.Manualslib.com manuals search engine

8. Fuel Pump Assembly

8.1 Function of fuel pump:

Fuel pump is used to deliver the fuel in the fuel tank to inside the engine at a certain pressure for combustion. It also needs to regulate the fuel pressure duly as required by system pressure (non fuel return type). Generally, the system fuel pressure provided by fuel pump is around 3.5-4bar.

8.2 Operating principle of fuel pump:

The electrical fuel pump is comprised of the DC motor, vane pump and end cover (integrates check valve, relief valve and anti-electromagnetic interference element) as shown in following figure.

The pump and the motor are installed on the same shaft within same closed housing. The pump and electromotor are full of gasoline for coolant and greasing inside of the casing. The accumulator provide power to electric fuel pump via fuel pump relay, and the relay switches on electric fuel pump only when engine starting and running. When the engine stops for some reason, the pump will stop to run by itself.

The max pressure at the outlet of the electrical fuel pump shall be between 450 and 650 kPa, depending on the relief valve. Because the system is a non fuel return system, the pressure of the whole fuel system will be controlled by the fuel pressure regulator. The value is 400KPa in general.

The electric fuel pump has different flow to the engine's request. In order to facilitate the production, the electromotor revolutions of EKP13 series electric fuel pumps of the same structure are adjusted by changing the coil's number of turns, and thus the flow is adjusted. Therefore, do not apply an electric fuel pump for one model to another at will.

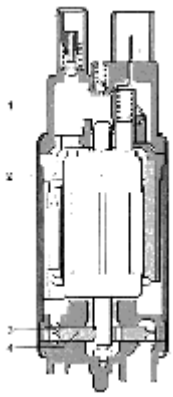

Cross-section view of electric fuel pump

8.3 Parameters of technical features

Under certain fuel supply pressure, the flow of the electric fuel pump is in direct proportion to voltage. The fuel pumps used by complete vehicle manufacturers are different.

8.4 Installation attentions

EKP13 series electric fuel pump can only be used inside fuel tank. When installing the fuel pump, the filter net at fuel inlet with mesh size not bigger than 60**m**or arranged with the customer must be installed. Be careful not to let the fuel jet from air vent spray on the filter net at fuel inlet, fuel pump bracket or fuel tank wall. Be careful when carrying the fuel pump. First, be sure to protect the filter net at fuel inlet from load and impact. The fuel pump should be taken out of the plastic

Downloaded from www.Manualslib.com manuals search engine

wrapping material with care only when installing. The viser can be taken off only when the fuel pump is to be installed. Takeoff of the filter net at fuel inlet is absolutely not allowed. The foreign material that enters the fuel inlet of the fuel pump or the filter net may lead to damage of the fuel pump.

8.5 Failure effects and judgment method

- Failure effect: strong running noise, poor acceleration, failure to start (starting difficulties) etc.
- Reasons for general failures: use of inferior fuel leads to:

  1. Accumulated colloid became insulation layer;
  2. Fuel pump bushing and armature blocked;
  3. Components of fuel level sensor eroded.
- Maintenance precautions:

1. The electric fuel pump has different flow according to the requirement of engine. The pump with same shape and possible to assemble perhaps is not available. For service, the part number of replaced fuel pump must be in conformity with the original ones;

2. Do not run the pump at dry status to prevent the pump from accident;

3. Please pay attention to take cleaning measures for fuel tank and pipeline and replace fuel filter in case replace fuel pump.

Simple measurement method:

1. With the joint removed, swift the digital multimeter on ohm shift, connect the two meter pens to two pins of pump respectively to measure the inner resistance, it is indicated that is not at zero or infinite (that is non short circuit, open circuit status).

2. With the joint connected, connect the fuel pressure gauge onto the sucker, start the engine and then observe if the fuel pump works; if the fuel pump does not run, check if mains voltage is present at “+” pin; if the fuel pump works, under idling mode, check if the fuel pressure is about 400kPa.

9. Injector

9.1 Function of injector:

ECU controls the coil of the injector through pulse to make the injector open or close, so that, appropriate fuel will be injected into air intake pipe in due time to mix with air.

9.2 Working principle:

ECU sends electrical impulse to injector coil to form magnetic field force. When magnetic field force increase to resultant force that enough to conquer return spring pressure, needle valve gravity and friction force, the needle valve begin to rise up and start the injection process. The pressure of return spring makes needle valve close again when the injection impulse is stopped.

Downloaded from www.Manualslib.com manuals search engine

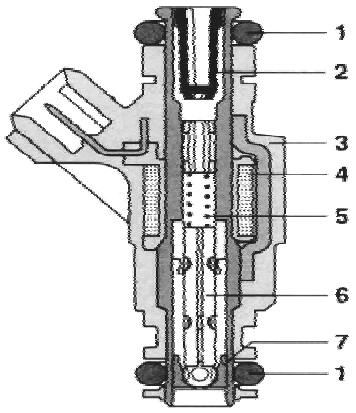

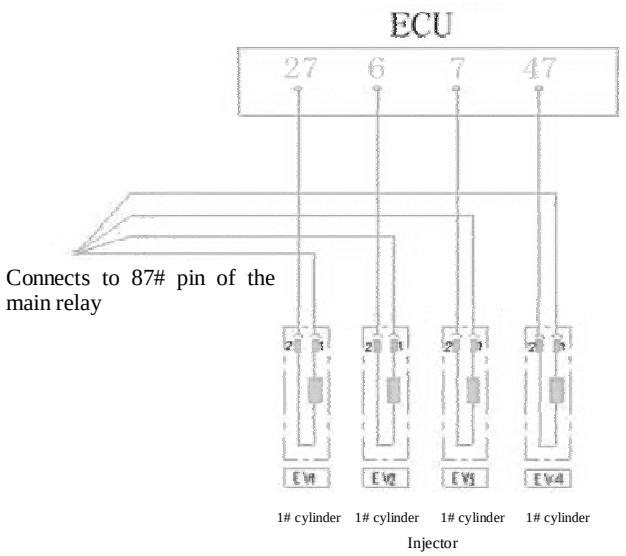

Circuit diagram of electromagnetic injector

9.3 Parameters of technical features

Item	Value			Unit
	Min.	Typical	Max.	
Operating pressure (pressure difference)		350		KPa
Injector electric resistance at 20℃	11		16	W

Allowable fuel:

The injector can only use the fuel in compliance with the provisions in GB 17930-1999 (for vehicle unleaded gasoline) and GWKB 1-1999 (harmful substance control standard for vehicle gasoline), and detergent is required to be added into gasoline. It should be specially pointed out that too long storage of gasoline may make it deteriorate. Especially, the taxi with a (LPG and gasoline) dual-fuel engine uses LPG as fuel long and gasoline is only used for startup, so, daily consumption of gasoline is little. However, because the fuel pump runs long, so the temperature of fuel tank is quite high. If gasoline is stored in the fuel tank of such auto, it may quite liable to oxidation and deterioration, which may lead to choke even damage of injector.

9.4 Installation attentions

- Use specific connector for certain injector and no mixed use will be allowable.
- For installation convenience, it is recommended to daub silica-free clean engine oil on the

Downloaded from www.Manualslib.com manuals search engine

surface of the O-ring at the upside of the injector where it connects with the fuel distributing pipe. Be careful not to let engine oil contaminate inside of the injector and the nozzle.

- Place the injector in its bracket vertically along injector bracket, then fix it to the bracket with retaining clips. Note:

① By location mode, the remaining clips for injector fall into axial location remaining clip and axial and radial location remaining clip; misuse should be avoided.

② For installation of an axially located injector, make sure that the bayonet at middle of the remaining clip is completely locked into the groove of the injector and the grooves at both sides of the remaining clip are completely locked into the outskirt flanging of the injector seat.

③ When installing an injector that both axial and radial locations are required, use an axial and radial location remaining clip and place the locating piece of the injector and the locating pin of the injector seat respectively into the corresponding grooves on the location remaining clip.

④ If the injector has two grooves, be careful not to place by mistake, refer to the installation site of the original.

- Installation of injector should be done by hand and knocking the injector with such tools as hammer etc. is prohibited.
- When disassemble/reassemble the fuel injector, the O ring must be replaced. And pay attention to not damage the sealing surface of the injector.
- Do not pull the support gasket of O-ring out of the injector. When installing, avoid damage to fuel inlet end, support ring, nozzle plate and electric connector of the injector. If damaged, use is prohibited.
- After installation of injector, perform leakproofness detection for fuel distributing pipe assembly. It is acceptable only when no leakage exists.
- The failure part must be disassembled by hand. Remove remaining clip of the injector first, and then pull out the injector from the injector seat. After disassembly, ensure cleanliness of the injector seat and avoid contamination.

9.5 Failure effects and judgment method

- Failure effects: Poor idling, poor acceleration, failure to start (starting difficulties) etc.
- Reasons for general failures: failure caused by colloid accumulation inside the injector due to lack of maintenance.
- Maintenance precautions: (see installation attentions)
- Simple measure method:

(remove the joint) swift the digital multimeter on ohm shift, connect the meter pens to the two pins of injector. The rated resistance should be 11 - 16Ω, when it is 20℃.

Suggestion: regularly wash and analyze the injector using a special washer analyzer for injector.

10. Ignition Coil

10.1 Function of ignition coil:

Primary and secondary circuits are integrated inside the ignition coil; when ECU controls on-off of current in the primary coil, a high voltage as high as thousands volts will be generated in the secondary coil, which will then generate spark through ignition cable and spark plug to ignite the mixed air in the cylinder.

10.2 Working principle

Ignition coil ZS - K2 ´2 consists of two primary windings, two secondary windings, mandrel, and

Downloaded from www.Manualslib.com manuals search engine

casing. When one of the primary windings grounding channel is connected, the primary winding is in charging. Once the primary winding circuit is cut off by ECU, the charging will be stopped. At the same time, the high voltage is sensed in the secondary winding and making the spark plug discharging. There is a different with the distributor ignition coil: for the ignition coil ZS - K2´2, there is one spark plug on both side of the secondary winding, so the both spark plugs can ignite at the same time. These two primary windings power on/off alternatively, correspondently, these two secondary windings discharge alternatively.

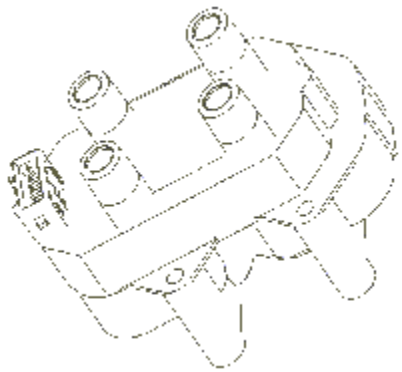

Double spark ignition coil

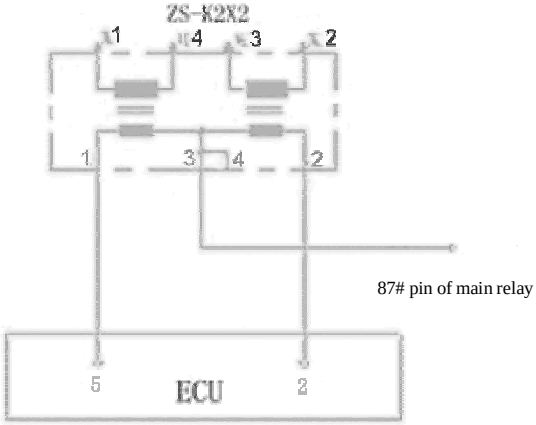

10.3 Technical characteristic

Item		Value			Unit
		Min.	Typical	Max.	
Nominal voltage			14		V
Resistance (20 to 25℃)	Primary winding	0.42	0.5	0.58	W
	Secondary winding	11.2	13.0	14.8	kW
Inductance (20 to 25℃)	Primary winding	3.4	4.1	4.8	mH
	Secondary winding	26.5	32.0	37.5	H
Voltage produced	50pF load	30			kV
	50pF//1MW load	23			kV

10.4 Failure effects and judgment method

- Failure effects: start failure etc.
- Reasons for the failures: burn out due to too strong current, damage by external force etc.
- Maintenance precautions: use of “test ignition by short circuit” to test the ignition function is prohibited during maintenance to avoid damage to the electronic controller.
- Simple measurement method:

With the joint removed, turn the digital multimeter to Ohm shift, and then connect the two meter pens respectively to the two pins of primary winding. At 20℃, the resistance should be 0.42-0.58Ω, while this value of secondary winding should be 11.2-14.8kΩ.

Downloaded from www.Manualslib.com manuals search engine

11. Spark Plug

The operating conditions of spark plug is extremely inclement, it is exposed to high pressure, high temperature and impact as well as strong corrosion from combustion product; therefore, it is a wearing part.

11.1 Outline drawing

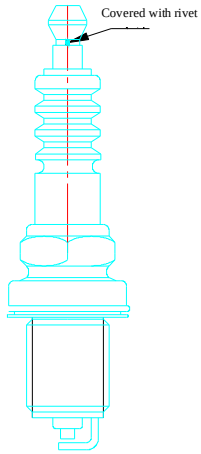

Mono-pole

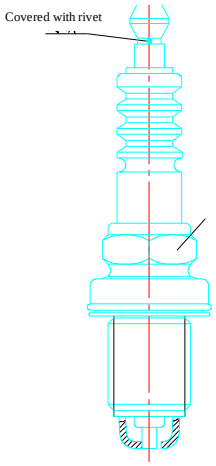

Triple-pole

11.2 Thermal performance

The spark plug must maintain a proper temperature to keep good working order. Practically, when insulator skirt of the spark plug maintains a temperature of 500-700℃, the oil drop that falls on the insulator can be burnt away immediately without carbon deposit formed. This temperature is called "self cleaning temperature of spark plug". With a temperature below this scope, the spark plug is liable to carbon deposit and electric leakage, thus causing ignition failure; with a temperature above this scope, when the mixed air is contacting with the red-hot insulator, pre-ignition may occur to produce knock, even it may burn in intake stroke and cause backfire.

11.3 Potential failures due to fall of ignition performance of spark plug

Starting difficulties, unsteady speed, chatter of engine, black smoke out of exhaust pipe, high fuel consumption and poor power.

11.4 Judge if the vehicle status matches with the spark plug type through color of spark plug

Yellow, brown yellow normal indicates that the combustion status of mixed air is normal

Black with carbon deposit carbon deposit check if the spark plug type matches and then replace with the spark plug with lower heat value (slow heat radiation).

Black with blot soot clean if the injector nozzle is dirty

Dilute if the mixture ratio of oil gas is too big.

Check ignition coil etc. if the high voltage is poor.

Black with oil stain combustion of engine oil check sealing status of the seal ring and if

Downloaded from www.Manualslib.com manuals search engine

scratch is present on the cylinder wall.

Pearl overheating check if the spark plug type matches, and then replace with the spark plug with lower heat value (rapid heat radiation).

11.6 Regular replacement and use overdue

The spark plug is the low-value consumption goods. Though cheaper compared with other matching parts, its ignition performance directly affects the performance of the engine. Therefore, it needs regular replacement. For the spark plug used in our vehicles, we suggest that you should replace the spark plug at the following mileages: 10,000-15,000 km (single electrode); 15,000-25,000 km (multi electrode).

Ignition performance fall of spark plug will make fuel consumption rise and power drop off. The economic loss caused by excessive fuel consumption unconsciously will even afford to hundreds of new spark plugs. Use overdue makes the working condition of the engine poor in long term and brings some damage to the engine.

11.7 Inspection and maintenance of the spark plug

The inspection items for spark plug mainly include carbon deposit, electrode burn through, gap, and sealing and spark jump performances of the spark plug etc.

The electrode gap of the spark plug should be 0.7-0.9mm. Too small electrode gap will reduce the breakdown voltage and weaken the spark intensity; while too big electrode gap will increase the voltage required by the spark plug and cause spark out, especially when the ignition coil is aging and the ignition system is in poor maintenance, spark out is more liable to occur.

Common failures of spark plug: fall in sealing performance, air leak and soot at the air leakage position. The above failures can be inspected and judged through sealing performance test and spark jump test. Both sealing performance test and spark jump test can be conducted on a spark plug cleaning tester.

It is unscientific that some drivers and maintenance professionals remove the spark plug from the engine, place it on the cylinder head and inspect if it is in sound conditions using high voltage of the vehicle. In this test, the spark plug electrode is under an atmosphere other than a gas pressure of over 800KPa, its working pressure. Therefore, spark jump of a spark plug under an atmosphere does not indicate that it will also reliably produce spark jump under a high pressure conditions in the cylinder.

It is required that carbon deposit disposal and proper adjustment of spark plug gap should be done after a mileage of 10,000-15,000 km in its lifetime. When the temperature in cylinder rises, the electrode gap should be increased properly. That is, increase the electrode gap in summer while reduce it in winter. If the mixed air is strong, the electrode gap should be increased; otherwise, decreased. In plain region, the electrode gap should be decreased while in plateau region, increased.

12. Carbon Canister Solenoid Valve Control

12.1 Function:

Carbon canister solenoid valve is a device used to enable the fuel steam in fuel tank to enter cylinder to combust through control of ECU. Through controlling duty cycle of a solenoid valve, ECU can accomplish open and close of the solenoid valve.

12.2 Working principle:

The canister control valve is composed of solenoid, armature iron and valve etc. There is a filter net at the inlet. The airflow through the canister control valve at one hand depends on the duty cycle of the electric pulse output of canister control valve by ECU, and at another hand depends on the

Downloaded from www.Manualslib.com manuals search engine

pressure difference between the inlet and the outlet of the canister control valve. The canister control valve will be closed when there is not any electric pulse.

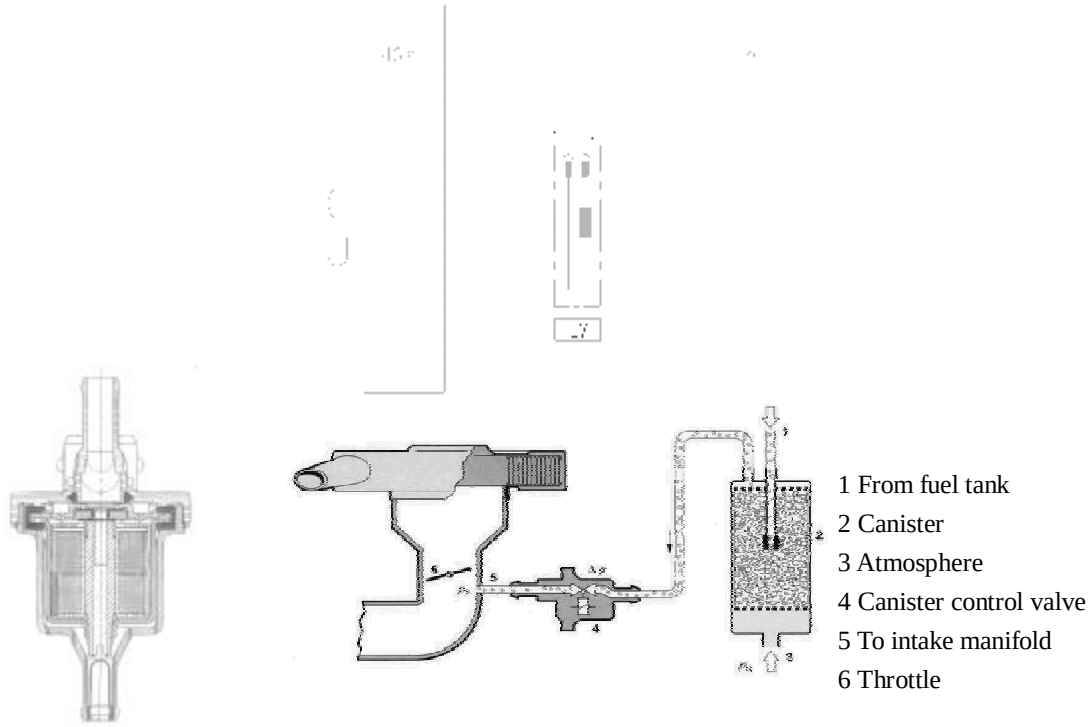

Installation drawing of canister control valve

12.4 Installation attentions

See above installation drawing for connection among canister control valve, carbon canister and intake manifold.

- In order to avoid transfer of solid borne noise, floating installation of the canister control valve on the hose is recommended.
- During installation, make sure that the airflow direction meets the specification.
- Appropriate measures such as filtering and purge etc. must be taken to prevent such foreign material as particles from entry into the canister control valve from carbon canister or hose.

It is recommended that a corresponding protective strainer (size of grid<50mm) should be installed on outlet of carbon canister.

12.5. Failure effects and judgment method

- Failure effects: Failure of functions etc.

Reasons for general failure: corrosion or poor sealing performance etc. due to entry of foreign material into inside of the valve.

- Maintenance precautions:

1. During installation, make sure that the airflow direction meets the specification;

2. In case of control valve failure due to black particle inside the valve body, when replacement of the control valve is required, check the status of the canister;

3. During maintenance, try to avoid entry of such liquid as water and oil etc. into the valve;

4. In order to avoid transfer of solid borne noise, floating installation of the canister control valve on the hose is recommended.

Downloaded from www.Manualslib.com manuals search engine

- Simple measurement method:

With the joint removed, turn the digital multimeter to Ohm shift, and then connect the two meter pens respectively to both pins of the canister control valve. The rated resistance at 20℃ should read 26±4Ω.

13. Electronic Accelerator Pedal

13.1 Function:

The electronic accelerator pedal has cancelled the conventional throttle guy and the position of accelerator pedal is fed back to ECU by means of electronic signal, through which ECU can calculate and control the action of the electronic accelerator pedal. Two sets of Hall sensors are integrated in the pedal; ECU can compare and analyze the two signals, if one signal is improper, ECU will duly access the other signal and light the failure indicator.

13.2 Working principle:

The pedal is a Hall sensor. The fixed Hall generator and signal processing circuit are installed on fixed mounting of the pedal. The two permanent magnets with different magnetic sheet thickness act together with the pedal. When the pedal acts, the magnetic flux passing the Hall generator will also change accordingly, the signal processing circuit will process these signals and then send them to ECU.

13.3 Detection:

The relationship between the two signals of the accelerator pedal is that signal 1 is equal to signal voltage.

At idle speed position, the voltage of signal 1 is 4.59 and that of signal 2 is 4.30. When the pedal is at middle position, the voltage will be the minimum; when the pedal is at either end position, the voltage will be the maximum.

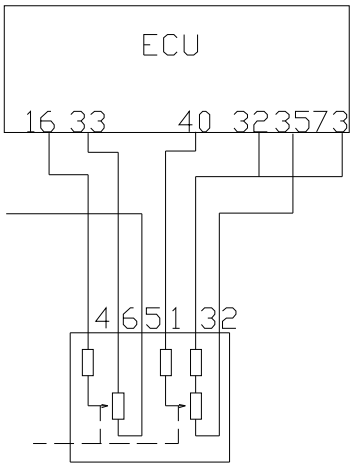

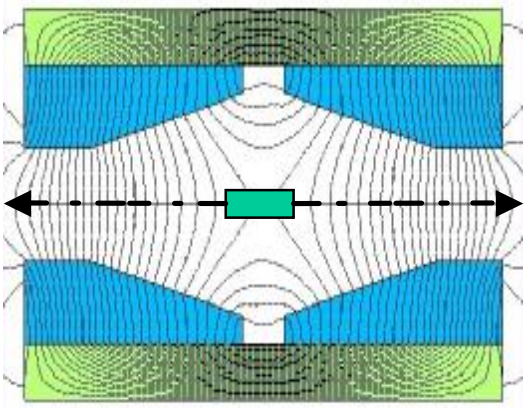

14. Three-way Catalytic Converter

14.1 Function:

Three-way catalytic converter is used to convert the noxious gas in tail gas into such innocuous

Downloaded from www.Manualslib.com manuals search engine

gases as carbon dioxide and water etc. At 300-800℃, the conversion efficiency of three-way catalytic converter is maximum; with a temperature below this scope, the conversion efficiency will be very poor, while, with a temperature above this scope, the three-way catalytic converter may be burnt out. Three-way catalytic converter can exert better conversion efficiency only when the oxygen sensor works. In control strategies of ECU, there are several protective modes for three-way catalytic converter, and ECU can protect the three-way catalytic converter by regulating air-fuel ratio and ignition advance angle.

15. Fan Control

15.1 Function:

In order to abstract heat from engine system and from condenser with A/C turned on, fan control is affected by the signal to ECU sent by water temperature sensor; When water temperature is high (above the threshold value set by ECU), the fan will run, and when water temperature is low (below the threshold value set by ECU), the fan will also run; with A/C turned on, the fan will run at low speed.

15.2 Composition:

DC electric motor double fan (high and low speed change).

15.3 Installation requirements:

The fan is installed between the rear of radiator and the engine, be careful when installing: not to damage fin of fan blade, otherwise, running noise of the fan will increase, if serious, it may lead to sharp fall of heat radiation effect of the engine.

15.4 Failure diagnosis:

Fan control circuit is a short or open circuit to ground;

The fan has failure itself;

Too loud fan noise;

Failure in power supply circuit of fan.

15.5 Troubleshooting:

First, validate whether it is a high speed fan system problem or a low speed fan system problem. Provided that this is a fan control system problem, use a diagnostic tester to locate the failure point, and then validate whether it is a short-circuit or a break in control circuit.

Failure symptom: the fan failure may result in rise of engine coolant temperature and poor refrigeration of A/C system.

15.6. Fan Control:

Turn-on of low gear of fan:

1. Temperature of engine coolant: 96℃-102℃;
2. On request for A/C, the fan will start up;
3. When driving speed is too high, the fan will start up;

High speed startup of fan:

1. Engine coolant temperature sensor failure;
2. Air flow meter failure;
3. Engine coolant temperature exceeds 102℃.

Pins:

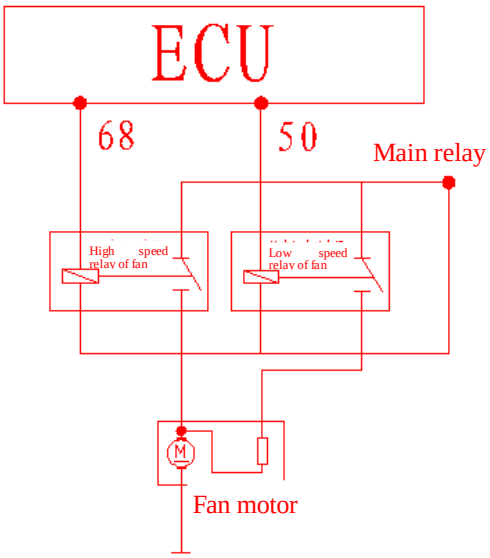

Brief sketch map of fan control

Downloaded from www.Manualslib.com manuals search engine

1. High speed fan control (corresponds to ECU50#);
2. Low speed fan control (corresponds to ECU68#);

The operating mode of fan after engine stops:
1. Failure of intake air temperature sensor of engine, delay 60s;
2. Failure of intake air temperature sensor of engine, delay 60s;
3. Engine coolant temperature exceeds 100.5℃, delay 60s;
4. Engine coolant temperature exceeds 70.5℃, delay 60s.

16. Position Sensor of Double Brake Pedal

16.1 Function:

制动开关传感器是将刹车信号送给 ECU，ECU 根据（原文不全）

16.2 Working principle:

Inside the brake switch, there are two mutually independent switches with one normal close and the other normal open. After applying the accelerator pedal, the former normal close switch turns to be normal open, while the normal open one turns to be normal close. Both signals will be sent to ECU to be used to control other systems. Whenever the two signals disaccord, ECU will enter failure mode, the electronic throttle will not respond when applying the accelerator pedal and the engine will maintain idle speed working state.

Composition: the double brake switch is installed on the bracket of the brake pedal and contains two independent switches inside.

Installation requirement: the assembly is installed on the pedal and there is a thread adjusting mechanism on the switch for stroke adjustment of the switch and effective stroke adjustment of the brake switch.

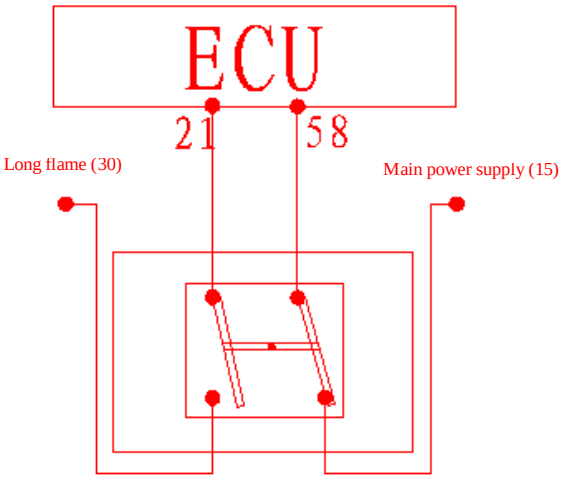

Double brake switch

17. Clutch Position Sensor

17.1 Function:

Downloaded from www.Manualslib.com manuals search engine

Clutch position switch provides ECU with the signal of clutch position, but this signal can only be used to distinguish between disengaging and engaging positions of the clutch.

17.2 Working principle:

ECU provides clutch position switch with a 12V power supply; when the clutch is under disengaging state, the power supply will ground and ECU will lose 12V high potential signal, by which the position of the clutch can be judged.

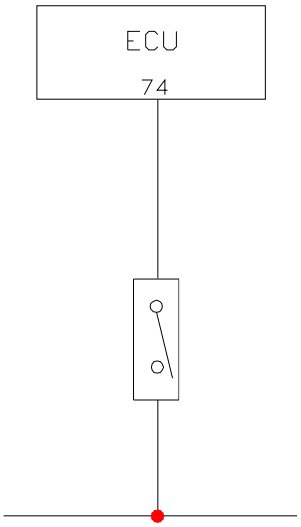

18. A/C Control

By receiving the A/C signal from A/C switch, ECU can control working of A/C compressor. ECU also can receive the signals from high and low pressure switches of A/C to ensure safety of A/C system. When A/C signal is sent to ECU through high and low pressure switches, if the low pressure switch breaks, ECU will not receive the A/C signal; the compressor is thus unable to work. If A/C system has a too high pressure, the high pressure switch will break and A/C signal can not be provided to ECU; so, ECU will immediately cut off the compressor. When system pressure is normal or a little higher (medium pressure), the medium pressure switch will cut in; thus, ECU can control the fan to run immediately at high speed to ensure a system pressure within the normal range.

Cut off pressure of the low pressure switch: 0.12Mpa

Cut-in pressure of the medium voltage switch: 1.6Mpa

Cut off pressure of the high pressure switch: 3.2Mpa

Through evaporator temperature sensor of the A/C system, ECU can also protect the A/C system and prevent evaporator case from freezing. When the temperature provided by the evaporator temperature sensor is blow 3.75℃, ECU will cut off the compressor; when the temperature is above this degree, ECU will automatically engage the compressor to let it work.

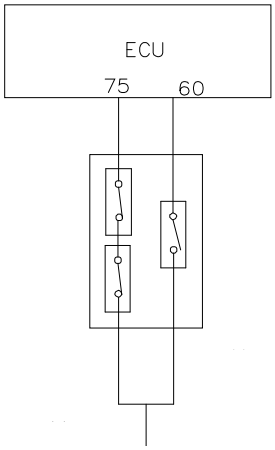

Downloaded from www.Manualslib.com manuals search engine

Chapter Two Fundamental Principle for Failure Diagnosis of Electronic Fuel Injection System

1. Failure Information Records

The ECU monitors sensor, actuator, related circuit, malfunction indicator and battery voltage etc., and even EUC itself continuously. At the same time, the ECU inspect the reliability test on sensor signal output, actuator driving signal and internal signal (e.g.: closed loop control, knock control, idle speed control and accumulator voltage control etc.). ECU will set the malfunction record on RAM malfunction memory immediately once the malfunction or the unlikelihood signal is detected. The failure information records are stored in the form of diagnostic trouble code (DTC) and are displayed in the precedence order of occurrence of the failures.

Failures can be divided into “stable state failures” and “random failures” (for example, caused by transient open circuit of wires or poor contact of inserted parts) by failure frequency.

2. Failure State

Once duration of occurrence of an identified failure exceeds the given stabilization time for the first time, ECU will account it as a stable failure and then store it as a “stable state failure”. If this failure disappears, it will be stored as a “random failure” and “non-existent”. If this failure is identified again, it will still be a “random failure”, but a “existent” early failure that will not affect average service of the engine.

3. Failure Types

- Short circuit to positive pole of power supply
- Short circuit to ground
- Open circuit (for the case where there are pull-up resistors or pull-down resistors during input stage, ECU will recognize failure of open circuit at input port as that of short circuit to positive pole of power supply or that of short circuit to ground)
- Signals can not be used

4. Failure Frequency Counter

- For every identified failure, a separate frequency counter numerical value (Hz) will be set.
- This numerical value (Hz) for frequency counter determines the time this failure

Downloaded from www.Manualslib.com manuals search engine

information record will be stored in memory after the identified failure disappears (after troubleshooting).

- When a failure is identified for the first time, Hz will be set as its initial value 40. If failure status does not change, then this numerical value will maintain all along.
- Once it is identified that this failure has disappeared and the state has held for a certain time, whenever the engine starts with success (its engine speed has exceeded the value at end of starting) once, Hz will decrease by 1. At this point, ECU will believe that this failure has disappeared, but the failure information record still exists.
- If a failure (for example, as a result of poor contact) frequently appears and disappears, then Hz will increase by 1, but will not exceed its given upper limit value 100.
- If value of Hz has been decreased to zero, the failure information records in this failure memory will be completely cleared.

5. Limp Home

For some identified significant failures, when duration exceeds the given stabilization time, ECU will take appropriate software countermeasures, for example, closing some control functions such as closed loop control of oxygen sensor etc. and setting substituted values for some data that are considered to be suspect and so forth. At this point, though the working condition of the engine is comparatively poor, the auto can still run. The purpose to do this is to enable the auto limply run home or to a service station for overhaul, so as to avoid the embarrassment that the auto breaks down on highway or afield. Once it is identified that the failure has disappeared and Hz has fell to below 40, use of normal data will be resumed again.

6. Failure Alert

In the electric control system, when failure take places in any of such important parts as ECU, absolute pressure sensor in intake manifold, throttle position sensor, coolant temperature sensor, knock sensor, oxygen sensor, phase sensor, injector, two driver stages of step motor of idle speed actuator, canister control valve, or fan relay at corresponding failure location, ECU will give an alarm through lightening of failure indicator lamp until this failure location restores.

7. Readout of Failure

The failure information records can be called out of ECU through a trouble diagnosis tester. If the failure relates to the function of mixed air (fuel and air) proportional regulator, then the engine must at least run for 4 minutes before reading out failure information records; especially for failure in oxygen sensor, be sure not to detect data until the engine runs and warms up.

Downloaded from www.Manualslib.com manuals search engine

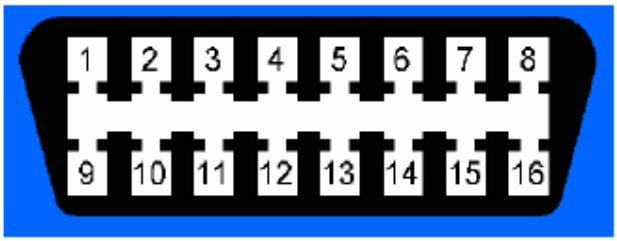

Figure 3-1 ISO 9141-2 Standard Diagnostic Connector

8. Clearing Failure Information Records

After the failure is removed, the failure information records in memory should be cleared. The diagnostic trouble code can be cleared through the following approaches:

- When the numerical value of frequency counter in ECU reaches zero, the failure information records in failure memory will be automatically cleared.
- Employing fault diagnostic tester to clear records of failure with the instruction of “reset memory for records of failure”.
- Pulling out connectors of ECU or disconnecting wires of battery to clear records of failure in external ram.

9. Failure Locating

After obtaining failure information records through above means, only rough location where the failure takes place is aware, but this does not mean that the failure has been located; because the cause that triggers a piece of failure information may be damage of electric element (such as sensor, actuator or ECU etc.), lead break, lead short-circuit to ground or anode of battery, even may be mechanical failure.

The failure is intrinsic and the result of its extrinsic representations is a variety of symptoms. After a symptom is found, first, check for failure information records with a trouble diagnosis tester or based on the flash code, after that, remove the correlated failure in accordance with the failure information, and then locate the failure based on symptom of the engine.

10. Failure Code Table

No.	DTC	Explanation	Failure class
1	P0016	Improper relative installation position between camshaft and crankshaft	class5
2	P0030	Failure in heating control circuit of upstream oxygen sensor	class31
3	P0031	Too low voltage in heating control circuit of upstream oxygen sensor	class31

Downloaded from www.Manualslib.com manuals search engine

4	P0032	Too high voltage in heating control circuit of upstream oxygen sensor	class31
5	P0105	Signal failure of intake air pressure sensor	class31
6	P0106	Improper signal from intake air pressure sensor	class31
7	P0107	Too low voltage in signal circuit of intake air pressure sensor	class31
8	P0108	Too high voltage in signal circuit of intake air pressure sensor	class31
9	P0112	Too low voltage in signal circuit of intake air temperature sensor	class5
10	P0113	Too high voltage in signal circuit of intake air temperature sensor	class5
11	P0117	Too low voltage in signal circuit of engine coolant temperature sensor	class31
12	P0118	Too high voltage in signal circuit of engine coolant temperature sensor	class31
13	P0121	Improper signal from electronic throttle position sensor 1	class34
14	P0122	Too low voltage in signal circuit of electronic throttle position sensor 1	class34
15	P0123	Too high voltage in signal circuit of electronic throttle position sensor 1	class34
16	P0130	Improper signal from upstream oxygen sensor	class31
17	P0131	Too low voltage in signal circuit of upstream oxygen sensor	class31
18	P0132	Too high voltage in signal circuit of upstream oxygen sensor	class31
19	P0134	Failure in signal circuit of upstream oxygen sensor	class31
20	P0201	Failure in 1# cylinder injector control circuit	class5
21	P0202	Failure in 2# cylinder injector control circuit	class5
22	P0203	Failure in 3# cylinder injector control circuit	class5
23	P0204	Failure in 4# cylinder injector control circuit	class5
24	P0219	Engine revolution exceeds the maximum revolution limit	class5
25	P0221	Improper signal from electronic throttle position sensor 2	class34
26	P0222	Too low voltage in signal circuit of electronic throttle position sensor 2	class34
27	P0223	Too high voltage in signal circuit of electronic throttle position sensor 2	class34
28	P0261	Too low voltage in 1# cylinder injector control circuit	class5
29	P0262	Too high voltage in 1# cylinder injector control circuit	class5
30	P0264	Too low voltage in 2# cylinder injector control circuit	class5
31	P0265	Too high voltage in 2# cylinder injector control circuit	class5
32	P0267	Too low voltage in 3# cylinder injector control circuit	class5
33	P0268	Too high voltage in 3# cylinder injector control circuit	class5
34	P0270	Too low voltage in 4# cylinder injector control circuit	class5
35	P0271	Too high voltage in 4# cylinder injector control circuit	class5
36	P0321	Improper signal of crankshaft top dead center	class33
37	P0322	Engine speed signal failure	class33
38	P0324	Failure in knock signal processing chip and its circuit	class5
39	P0327	Too low voltage in signal circuit of knock sensor	class31
40	P0328	Too high voltage in signal circuit of knock sensor	class31

Downloaded from www.Manualslib.com manuals search engine

41	P0340	Failure in signal circuit of phase sensor	class5
42	P0341	Improper signal from phase sensor	class5
43	P0342	Too low voltage in signal circuit of phase sensor	class5
44	P0343	Too high voltage in signal circuit of phase sensor	class5
45	P0444	Failure in control circuit of canister control valve	class31
46	P0458	Too low voltage in control circuit of canister control valve	class31
47	P0459	Too high voltage in control circuit of canister control valve	class31
48	P0480	Failure in relay control circuit of electronic cooling fan (low speed)	class5
49	P0481	Failure in relay control circuit of electronic cooling fan (high speed)	class5
50	P0501	Improper speed signal	class5
51	P0504	Improper signal of brake pedal A/B	class5
52	P0506	Engine speed under idle speed control is below the target idle speed	class5
53	P0507	Engine speed under idle speed control is above the target idle speed	class5
54	P0537	Too low voltage in signal circuit of evaporator temperature sensor	class5
55	P0538	Too high voltage in signal circuit of evaporator temperature sensor	class5
56	P0560	Improper system voltage signal	class33
57	P0562	Too low system voltage signal	class33
58	P0563	Too high system voltage signal	class33
59	P0571	Failure in signal circuit of brake pedal	class5
60	P0601	Failure in EEPROM of ECU	class33
61	P0602	Unprogrammed failure in ECU	class33
62	P0604	Failure in RAM of ECU	class34
63	P0605	Failure in ROM of ECU	class34
64	P0606	Safety monitoring function failure of electronic throttle	class34
65	P0627	Failure in control circuit of fuel pump relay	class33
66	P0628	Too low voltage in control circuit of fuel pump relay	class33
67	P0629	Too high voltage in control circuit of fuel pump relay	class33
68	P0645	Failure in control circuit of A/C compressor relay	class5
69	P0646	Too low voltage in control circuit of A/C compressor relay	class5
70	P0647	Too high voltage in control circuit of A/C compressor relay	class5
71	P0688	Improper output voltage of main relay	class33
72	P0689	Too low output voltage of main relay	class33
73	P0690	Too high output voltage of main relay	class33
74	P0691	Too low voltage in relay control circuit of electronic cooling fan (low speed)	class5
75	P0692	Too high voltage in relay control circuit of electronic cooling fan (low speed)	class5
76	P0693	Too low voltage in relay control circuit of electronic cooling fan (high speed)	class5

Downloaded from www.Manualslib.com manuals search engine

77	P0694	Too high voltage in relay control circuit of electronic cooling fan (high speed)	class5
78	P0704	Improper clutch pedal signal	class5
79	P1336	Restrictive effect of safety monitoring torque of electronic throttle	class34
80	P1545	The deviation between physical location and target location of electronic throttle overruns	class34
81	P1558	Too large opening resistance of electronic throttle	class34
82	P1559	Failure in self-study process of electronic throttle	class34
83	P1564	System voltage fails to meet the conditions for self-study of electronic throttle	class34
84	P1565	Failure in self-study of initialization of lower limit position of electronic throttle	class34
85	P1568	Too large restoration resistance of electronic throttle	class34
86	P1579	Fails to meet the conditions for self-study of electronic throttle	class34
87	P1604	Failure in self-study of gain adjustment of electronic throttle	class34
88	P1610	Unprogrammed error in Secret Key and Security Code	class39
89	P1611	Security Code acceptance error	class39
90	P1612	Challenge request failed	class36
91	P1613	Immo Code request failed	class36
92	P1614	Transponder check error	class36
93	P1677	Too high voltage in control circuit of detector lamp (SVS)	class5
94	P1678	Too low voltage in control circuit of detector lamp (SVS)	class5
95	P1679	Failure in control circuit of detector lamp (SVS)	class5
96	P2106	Failure in driver stage of electronic throttle	class34
97	P2122	Too low voltage in signal circuit of electronic accelerator pedal position sensor 1	class34
98	P2123	Too high voltage in signal circuit of electronic accelerator pedal position sensor 1	class34
99	P2127	Too low voltage in signal circuit of electronic accelerator pedal position sensor 2	class34
100	P2128	Too high voltage in signal circuit of electronic accelerator pedal position sensor 2	class34
101	P2138	Improper signal from electronic accelerator pedal position sensor	class34
102	P2177	Self-study value of closed loop air fuel ratio control is above the upper limit (normal load zone)	class5
103	P2178	Self-study value of closed loop air fuel ratio control is below the lower limit (normal load zone)	class5
104	P2187	Self-study value of closed loop air fuel ratio control is above the upper limit (idle speed zone)	class5
105	P2188	Self-study value of closed loop air fuel ratio control is below the lower limit (idle speed zone)	class5

Downloaded from www.Manualslib.com manuals search engine

106	P2191	Self-study value of closed loop air fuel ratio control is above the upper limit (heavy load zone)	class5
107	P2192	Self-study value of closed loop air fuel ratio control is below the lower limit (heavy load zone)	class5

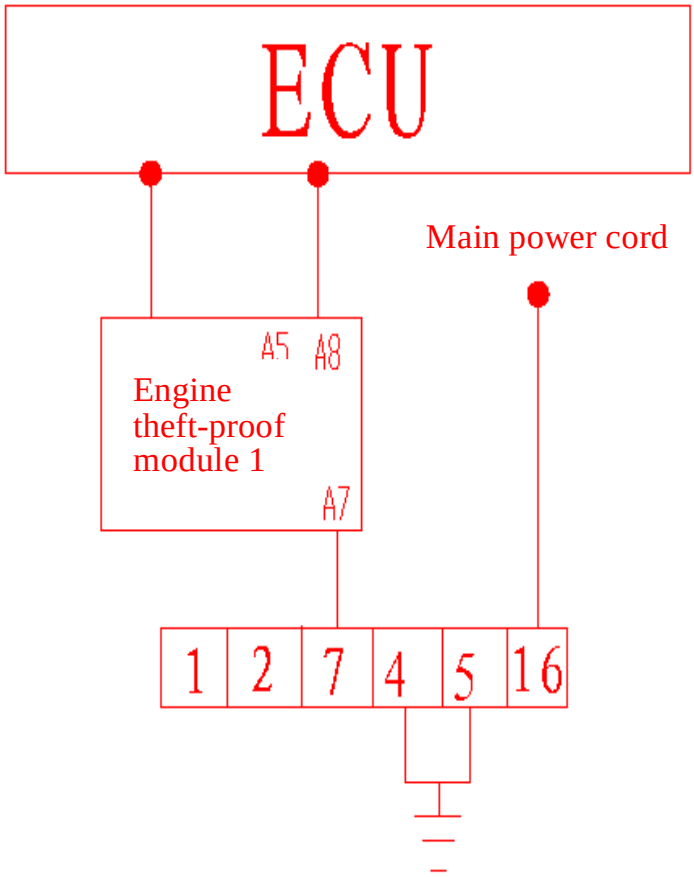

Electrical Schematic Diagram of Diagnostic Interface

Downloaded from www.Manualslib.com manuals search engine

11. The Steps for Implementation of Failure Diagnosis According to Failure Information Records

11.1 Electronic Throttle Failure

Failure codes: P012, P0122, P0123, P022, P0222, P0223, P1336, P154, P1558, P1559, P1564, P1565, P1568, P1579, P1604

No.	Operating steps	Result	Follow up steps
1	Put the ignition switch to "ON".		Next step
2	Pull out the joint of throttle position sensor on harness; use a multimeter to check if the magnitude of voltage between its 3# and 5# pins is around 12V and if a 5V voltage is present between 6# and 2# pins.	Yes	Next step
		No	5
3	Use a multimeter to check if the resistance values between 1#, 4# and 6# pins of the sensor are between 0.5kΩ and 1.6kΩ.	Yes	Next step
		No	Replace the sensor
4	Meanwhile, use a multimeter to check if it is break or short circuit between 1#, 4# and 6# pins of throttle position sensor and ECU38#, 54#, 36#; or, turn blade of the throttle to observe if its resistance value jumps and if the resistance values between 1#, 4# and 6# change accordingly with rotation of throttle.	Yes	Replace the sensor
		No	Replace ECU
5	Connect an adaptor between ECU and harness, use a multimeter respectively check if it is break or short circuit between 1#, 2#, 6# and 4# pins of the sensor and 10#, 32#, 36# and 54# pins of ECU joint.	Yes	Repair or replace wire harness
		No	Replace ECU

Note: This auto adopts the electronic throttle body and has cancelled former step motor, and the functions that were accomplished by the stop motor on a common throttle body are now completely accomplished by the throttle driving motor. The electronic throttle can not be repaired and failure rate of the throttle body is very low, if damaged, replacing the assembly is the only choice to deal with the problem.

Special attention: The electronic throttle body can not be disassembled and repaired at service station; in addition, after replacing electronic throttle body, be sure to let it carry out self-study; otherwise, unsteady working at idle speed of engine may occur. See also the section about electronic throttle for detailed study scheme. Maintenance of the throttle body is analogous to that of the common valve body.

Downloaded from www.Manualslib.com manuals search engine

11.2 Knock Sensor failure

Failure codes: P0324, P0327, P0328

No.	Operating steps	Result	Follow up steps
1	Close the ignition switch, and the engine stops.		Next step
2	Pull out the joint of knock sensor on harness, use a multimeter to check if both resistance values between 1# and 2# pins and between 1# pin and shielded wire (sensor shield) pin of knock sensor are more than 1MΩ.	Yes	Next step
		No	Replace with a new sensor
3	Knock on the edge of knock sensor with a small hammer and check with multimeter if there is communicating signal output between sensor pin 1# and 2#.	Yes	Next step
		No	Replace the sensor
4	Turn on the ignition switch but do not start the engine.		Next step
5	Connect an adaptor between ECU and harness, use a multimeter respectively check if it is break or short circuit between 19#, 20# pins of ECU and 1#, 2# pins of sensor joint.	Yes	Repair or replace wires
		No	Replace ECU

Note: Generally, knock sensor is not liable to damage. When disassembling and installing the knock sensor, be careful not to leave dirt on the contact surface of the sensor and the engine body and do not add any gasket. If the sensor is damaged, it will have an comparatively great effect on economical efficiency and emission of the engine. After the knock sensor is damaged, the electric control system of the engine will lock ignition advance angle of the engine at a fixed ignition angle, so, the acceleration performance of the engine will fall and economical efficiency and emission of the engine will also be greatly affected.

Downloaded from www.Manualslib.com manuals search engine

11.3 Air Pressure Sensor Failure

Failure codes: P0102, P0103, P0112, P0113

No.	Operating steps	Result	Follow up steps
1	Put the ignition switch to “ON”.		Next step
2	Pull out joint of intake air pressure sensor on harness; use a multimeter to check if a 5V voltage is present between 2# and 3# pins of the joint.	Yes	4
		No	Next step
3	Between ECU and harness, use a multimeter to respectively check if it is break or short circuit between 42# and 33# pins of ECU and 1#, 2#, 3#, 4# pins of sensor joint.	Yes	Repair or replace harness
		No	Next step
4	Replace the intake air temperature pressure sensor.		Next step

Note: In case the sensor shorts to 5V or 12V power supply or ground, the engine may not start up or stop running.

Downloaded from www.Manualslib.com manuals search engine

11.4 Front Oxygen Sensor Failure

Failure codes: P0130, P0131, P0132, P0134, P0135

No.	Operating steps	Result	Follow up steps
1	Put the ignition switch to “ON”.		Next step
2	Pull off the connector of harness of oxygen sensor. Check the voltage between pin 1# (+) and 2# (-) with multimeter and detect if it is around 12V.	Yes	Next step
		No	4
3	Use a multimeter to check if the resistance value between 1# and 2# pins of the oxygen sensor is between 2Ω and 5Ω at 23℃.	Yes	Replace ECU
		No	Replace the sensor
4	Check if heating circuit of the oxygen sensor is normal.	Yes	Next step
		No	Check the circuit
5	Check if it is short circuit or break circuit between the pin 2# of oxygen sensor and main relay 87# pin and between the sensor connector 1# pin and ECU 1# pin with multimeter.	Yes	Repair or replace harness
		No	Next step
6	Connect the oxygen sensor connector of harness and use neutral. Start the engine and leave it at idle speed until its coolant temperature reaches to the normal value.		Next step
7	Pull off the oxygen sensor connector of harness. Check the battery output voltage between pin 3# (+) and pin 4# (-) of the sensor with multimeter and detect if it is from 0.1 to 0.9V (after the engine warms up).	Yes	Next step
		No	Replace the sensor
8	Connect the adaptor between ECU and harness. Check if it is short circuit or break circuit between the pin 36# and pin 13# of ECU and the sensor connector pin 3# and pin 4# respectively with multimeter.	Yes	Repair or replace harness
		No	Replace ECU
9	Plug in the oxygen sensor connector of harness and use neutral. Start the engine and leave it at idle speed until its coolant temperature reaches to the normal value.		Next step
10	Connect special diagnostic tester for Chery to read part of data stream of the engine, and then observe if part of data stream of the sensor fluctuates between 100mv and 900mv.	Yes	Next step
		No	Replace the sensor
11	Start the engine and let it run at idle speed until coolant temperature reaches normal value.		Next step

Downloaded from www.Manualslib.com manuals search engine

12	Connect special diagnostic tester for Chery to read part of data stream of the engine, and then carefully observe part of data stream of the sensor; apply the accelerator pedal to bottom and then rapidly release it, observe if the output voltage of the oxygen sensor can reach below 100mv.	Yes	Check other part
		No	Replace the sensor

Note: when checking data flow of the oxygen sensor, be sure to note working position of the engine and let the working temperature of the engine reach the normal value, because the oxygen sensor only can start to work normally when the temperature is over 300℃.

Downloaded from www.Manualslib.com manuals search engine

11.5 Rear Oxygen Sensor Failure

Failure codes: P0136, 0137, 0138, 0036, 0037, 0038, 0054

No.	Operating steps	Result	Follow up steps
1	Put the ignition switch to “ON”.		Next step
2	Pull off the oxygen sensor connector of harness. Check the voltage between pin 1# (+) and 2# (-) with multimeter and detect if it is around 12V.	Yes	Next step
		No	4
3	Use a multimeter to check if the resistance value between 1# and 2# pins of the oxygen sensor is between 2Ω and 5Ω at 23℃.	Yes	Replace ECU
		No	Replace the sensor
4	Check if heating circuit of the oxygen sensor is normal.	Yes	Next step
		No	Check the circuit
5	Check if it is short circuit or break circuit between pin 2# of oxygen sensor and main relay 87# pin and between the sensor connector 1# pin and ECU 1# pin with multimeter.	Yes	Repair or replace harness
		No	Next step
6	Connect the oxygen sensor connector of harness and use neutral. Start the engine and leave it at idle speed until its coolant temperature reaches to the normal value.		Next step
7	Validate if the three-way catalytic converter works normally.	Yes	Next step
		No	Replace the three-way catalytic converter
8	Pull out the oxygen sensor joint on harness. Rapidly apply the accelerator pedal for several times, and then use a multimeter to check if a output voltage between 0.1V and 0.9V is present between 3# (+) and 4# (-) pins of the sensor (after the engine warms up).	Yes	Next step
		No	Replace the sensor
9	Connect the adaptor between ECU and harness. Check if it is short circuit or break circuit between the pin 36# and pin 55# of ECU and the sensor connector 3# and 4# pins respectively with multimeter.	Yes	Repair or replace harness
		No	Replace ECU
10	Connect the oxygen sensor connector of harness and use neutral. Start the engine and leave it at idle speed until its coolant temperature reaches to the normal value.		Next step
11	Connect special diagnostic tester for Chery to read part of data stream of the engine, and then observe	Yes	Next step

Downloaded from www.Manualslib.com manuals search engine

	part of data stream of the engine, and then observe if part of data stream of the oxygen sensor is around 100 under standard idling operation.	No	Replace the sensor or the three-way catalytic converter
12	Start the engine and let it run at idle speed until coolant temperature reaches normal value.		Next step
13	Connect special diagnostic tester for Chery to read part of data stream of the engine, and then carefully observe part of data stream of the sensor; rapidly apply the accelerator pedal for several times and observe if the output voltage of the oxygen sensor fluctuates within a comparatively large scope.	Yes	Check other part
		No	Replace the sensor

Note: The characteristics and operating principle of rear oxygen sensor is basically the same as those of front oxygen sensor, in special conditions, they can be interchanged to use. The only difference between them is their different installation sites (working atmospheres), therefore, during maintenance and diagnostic processes of the vehicle, please pay attention to some inspection techniques for front and rear oxygen sensors.

Downloaded from www.Manualslib.com manuals search engine

11.6. Coolant Temperature Sensor Failure

Failure codes: P0112, P0113

No.	Operating steps	Result	Follow up steps
1	Put the ignition switch to “ON”.		Next step
2	Pull out joint of coolant temperature sensor on harness; use a multimeter to check if the magnitude of voltage between 1# (+) and 2# (-) pins of this joint is around 5V.	Yes	Next step
		No	4
3	Use a multimeter to check if the resistance value between 1# and 2# pins of the sensor is in proportion to its temperature (refer to relevant part in this service manual).	Yes	Replace ECU
		No	Replace the sensor
4	Use a multimeter to check if it is break or short circuit between 17# and 29# pins of ECU and 2# and 1# pins of sensor joint.	Yes	Repair or replace harness
		No	Replace ECU
5	Start the engine, while engine coolant temperature rises, check if the voltages on two wires of the sensor falls as water temperature of the engine rises.	Yes	Next step
		No	Replace the sensor
6	Start the engine, disconnect the connector of water temperature sensor, and then observe if cooling fan of the engine starts up and runs at high speed.	Yes	Check other part
		No	Replace the ECU or the circuit

Downloaded from www.Manualslib.com manuals search engine

11.7 Failure in Driver Stage of Injector

Failure codes: P0201, P0202, P0203, P0204, P0261, P0262, P0264, P0265, P0267, P0268, P0270, P0271

No.	Operating steps	Result	Follow up steps
1	Close the ignition switch, and the engine stops.		Next step
2	Pull out each electromagnetic injector joint on harness in turn, and then lap the two pins of multimeter between 2# pin of the joint and the engine.		Next step
3	Put the ignition switch to "ON". Observe if, at the instant when the ignition switch cuts in, the multimeter displays an around 12V voltage value of battery (mainly check if the injector has power supply, which is provided by main relay).	Yes	Repeat 2
		All yes	6
		No	Next step
4	Use a multimeter to check in turn if it is break or short circuit between 87# pin of output terminal of main relay of the engine and 1# pin of each electromagnetic injector joint.	Yes	Repair or replace harness
		No	Next step
5	Repair or replace fuel pump relay and main relay and their circuits.	Yes	Repair or replace harness
6	Connect the adaptor between ECU and harness; use a multimeter to check in turn if it is break or short circuit between 27#, 7#, 47# or 6# pins of ECU and 2# pin of each corresponding electromagnetic injector joint on harness.	No	Next step
7	Use a multimeter to check in turn if a resistance between 12Ω and 16Ω is present at 20℃ between 1# and 2# pins (and resistance value of injector) of the electromagnetic injectors.	Yes	Repeat 7
		All yes	Next step
		No	Replace the electromagnetic injector
8	Re-plug all electromagnetic injector joints, engage the gear to neutral position, start the engine, and then let it run at idle speed. Pull out all electromagnetic injector joints on harness in turn. Whenever a joint is pulled out, observe if engine vibration is aggravated accordingly (equivalent to spark out experiment).	Yes	Repeat 8
		No	Replace ECU

Note: The damage probability of injector is very low; its main failure is carbon deposit in injection nozzle, which may result in atomization of fuel injection, poor spray and unsteady idle speed of engine; therefore, when inspecting, above failure should be inspected as an emphasis.

Downloaded from www.Manualslib.com manuals search engine

11.8 Failure in Driver Stage of Canister Control Valve

Failure codes: P0443, 0444, 0445

No.	Operating steps	Result	Follow up steps
1	Start the engine and let it run at idle speed until engine coolant temperature reaches normal value.		Next step
2	Pull out canister control valve joint on harness; use a multimeter to check if an around 8.6V battery voltage is present between two pins of this joint.	Yes	Next step
		No	5 (check positive wire)
3	Re-plug the canister control valve joint on harness, increase engine revolution to 2000rpm, and then touch the valve body by hand to check if the canister control valve has slight vibration and impact (frequency control).	Yes	Next step
		No	7 (check ground wire)
4	Use a multimeter to check if the resistance value between A# and B# pins of the canister control valve is around 25Ω (20℃).	Yes	Replace ECU
		No	Replace the canister control valve
5	Check if it is short circuit or break circuit between the pin of main relay 87# and the pin of canister control valve 1# with multimeter.	Yes	Repair or replace the harness
		No	Next step
6	Repair or replace the main relay and the circuit.		
7	Cut off the engine; connect the adaptor between ECU and harness, and use a multimeter to check if it is break or short circuit between 46# pin of ECU and A# pin of the canister control valve.	Yes	Repair or replace harness
		No	Replace ECU
8	With ignition switch ON, disconnect canister control valve joint, and then use a multimeter to check the A# and B# pins at harness end of solenoid valve.		Next step
9	Use a multimeter to check if an around 12V battery voltage is present between B# pin and ground wire.	Yes	Next step
		No	Check feed circuit
10	Use a multimeter to check if an around 3.6V battery voltage is present between A# pin and ground wire.	Yes	Check other part
		No	Check ECU circuit or replace the ECU

Note: The carbon canister solenoid valve is used for the emission control system, a system set up for environmental protection and air pollution prevention. When engine runs at idle speed or under heavy load operating mode, the solenoid valve will not participate in the work. A malfunction of this solenoid valve will result in unsteady operating mode of the engine. These details should be noted during maintenance process.

Downloaded from www.Manualslib.com manuals search engine

11.9 Failure in Driver Stage of Malfunction Indicator Lamp (MIL)

Failure codes: P1677, P1678, P1679

No.	Operating steps	Result	Follow up steps
1	Put the ignition switch to “ON”		Next step
2	Disassemble the dashboard, and then use a multimeter to check if it is break or short circuit between 29#, 30# pins at instrument end and 62#, 81# pins of ECU.	Yes	Check the circuit
		No	Next step
3	Replace the instrument and then check if it is normal	Yes	Next step
		No	Replace the instrument
4	Replace ECU, and then re-check if it works normally.	Yes	Replace ECU
		No	Check other part
5	Check CAN circuit for the place where is grounding or short.	Yes	Replace the harness
		No	Check other part

Note: The malfunction indicator lamp is controlled by ECU. When a failure occurs in the system, ECU will control the malfunction indicator lamp to light. There are two kinds of malfunction indicator lamps on this auto (engine failure indicator lamp and EPC), but the engine failure indicator lamp on the instrument may be shielded in the system, that is, when a failure occurs, EPC lamp will light, which should be noted during maintenance process.

Downloaded from www.Manualslib.com manuals search engine

11.10 Failure in Driver Stage of 1#, 2# Coils of Step Motor

Failure codes: P1682, 1683

No.	Operating steps	Result	Follow up steps
1	Turn on the ignition switch but do not start the engine.		Next step
2	Pull out connector of the electronic throttle, and then check if the resistance value between 5# and 3# pins of the connector is around 6.1Ω.	Yes	Next step
		No	Replace the electronic throttle body
3	Pull out the connector, and then use a multimeter to check if a 12V alternate voltage is present between 5# and 3# connectors of the electronic throttle.	Yes	Next step
		No	Check the circuit
4	Use a multimeter to check if a 12V voltage is present between the connector of the harness and ground when the key is ON.	Yes	Replace the idle speed actuator
		No	Next step
5	Between ECU and harness, use a multimeter respectively to check if it is break or short circuit between 67#, 65# pins of ECU and 5# pin of the connector and between 66#, 64# pins of ECU and 3# pin of the connector.	Yes	Repair or replace the harness
		No	Replace ECU

Note: Much about failure diagnosis for other parts has been involved above.

Downloaded from www.Manualslib.com manuals search engine

11.11 Crankshaft Position Sensor Failure

Failure code: P0016

No.	Operating steps	Result	Follow up steps
1	Put the ignition switch to “ON”.		Next step
2	Pull out camshaft position sensor joint on harness, and then use a multimeter to check if the voltage between 1# pin of this joint and ground wire is around 12V (battery voltage).	Yes	Next step
		No	Check circuit and main power supply
3	Pull out camshaft position sensor joint on harness, and then use a multimeter to check if the voltage between 2# pin of this joint and ground wire is around 11.5V (power supply from ECU and the voltage is below the battery voltage).	Yes	Next step
		No	Check circuit and ECU
4	Use a multimeter to check if it is break or short circuit between 79# pin of ECU and 2# pin of sensor joint.	Yes	Repair or replace the harness
		No	Next step
5	Pull out camshaft position sensor joint on harness, and then use a multimeter to check if it is conducting between 3# pin of this joint and ground wire.	Yes	Next step
		No	Replace the sensor
6	Connect the sensor connector and start the engine.		Next step
7	Use a oscillometer to check if an around 6V square wave signal output is present in 2# signal cable.	Yes	Check other part
		No	Replace the sensor

Note: The camshaft position sensor is an auxiliary sensor and has great effect on emission of the system. When failure occurs in this sensor, the vehicle will be difficult to start; though the vehicle will be basically normal after startup, driving restrictive practice will be found on the engine and the maximum revolution of engine can not exceed 4000rpm.

Downloaded from www.Manualslib.com manuals search engine

11.12 Craftshaft Position Sensor Failure

Failure codes: P0321, P0322, P0219

No.	Operating steps	Result	Follow up steps
1	Put the ignition switch to “ON”.		Next step
2	Pull out crankshaft position sensor joint on harness, use a multimeter to check if it is short or break circuit between 1# pin of this joint and 34# pin of ECU.	Yes	Check the circuit
		No	Next step
3	Pull out crankshaft position sensor joint on harness, use a multimeter to check if it is short or break circuit between 3# pin of this joint and 15# pin of ECU.	Yes	Next step
		No	Check circuit and ECU
4	Use a multimeter to check if it is break or short circuit between 79# pin of ECU and 2# pin of sensor joint.	Yes	Repair or replace the harness
		No	Next step
5	Pull out crankshaft position sensor joint on harness, and then use a multimeter to check if the two signal cables on the sensor has a resistance value of around 1000Ω.	Yes	Next step
		No	Replace the sensor
6	Connect the sensor connector and start the engine.		Next step
6	Use an oscillometer to check if signal waveform output is present in signal cable.	Yes	Check other part
		No	Replace the sensor

Note: Crankshaft position sensor is the main sensor of electronic control unit of engine. If crankshaft position sensor failure occurs, the engine will be difficult to start; acceleration performance of the engine will be greatly restricted after startup; the maximum revolution of the engine can not exceed 3800rpm; meanwhile, emission of the engine will deteriorate.

Downloaded from www.Manualslib.com manuals search engine

11.12 Ignition Coil Failure

No.	Operating steps	Result	Follow up steps
1	Put the ignition switch to “ON”.		Next step
2	Pull out ignition coil joint on harness, and then use a multimeter to check if the voltage between 3# pin of this joint and ground wire is an around 12V battery voltage.	Yes	Next step
		No	Check the circuit
3	Pull out ignition coil joint on harness, and then use a multimeter to check if it is short or break circuit between 1# pin of this joint and 5# pin of ECU.	Yes	Check circuit and ECU
		No	Next step
4	Pull out ignition coil joint on harness, and then use a multimeter to check if it is short or break circuit between 2# pin of this joint and 2# pin of ECU.	Yes	Check circuit and ECU
		No	Next step
5	Check if the resistance of primary coil of the sensor is around 0.9Ω.	Yes	Next step
		No	Replace the ignition coil
6	Check if the resistance of secondary coil of the sensor is around 14.5kΩ.	Yes	Next step
		No	Replace the ignition coil
7	Use an oscillometer to check if secondary ignition waveform of ignition cable of ignition system is normal.	Yes	Check other part
		No	Replace the ignition coil

Note: The ignition coil is mainly used to provide ignition system of engine with ignition energy. The failure rate of the coil itself is very low, but its failure probability can not be completely excluded. When failure occurs in ignition coil, the ignition energy of engine will be deficient, which may further lead to such failures as unsteady idle speed of engine and emission deterioration.

Downloaded from www.Manualslib.com manuals search engine

11.13 Accelerator Pedal Position Sensor Failure

Failure codes: P2106, P2122, P2123, P2127, P2128, P2138

No.	Operating steps	Result	Follow up steps
1	Put the ignition switch to “ON”.		Next step
2	Pull out accelerator pedal position sensor joint on harness, and then use a multimeter to check if an around 5V voltage signal is present between 3#, 6# pins of this joint and ground wire.	Yes	Next step
		No	Check the circuit
3	Pull out accelerator pedal position sensor joint on harness, and then use a multimeter to check if it is short or break circuit between 3#, 6# pins of this joint and 32#, 33# pins of ECU.	Yes	Check the circuit
		No	Next step
4	Pull out accelerator pedal position sensor joint on harness, and then use a multimeter to check if it is short or break circuit between 2#, 5# pins of this joint and 36#, 35# pins of ECU.	Yes	Check the circuit
		No	Next step
5	Pull out accelerator pedal position sensor joint on harness, and then use a multimeter to check if it is short or break circuit between 4#, 1# pins of this joint and 16#, 40# pins of ECU.	Yes	Check the circuit
		No	Next step
6	Use a diagnostic tester to read signal output of accelerator pedal position sensor, and then check if signal 1 increases as opening of accelerator pedal increases.	Yes	Next step
		No	Replace the sensor assembly
7	Use a diagnostic tester to read signal output of accelerator pedal position sensor, and then check if signal 2 increases as opening of accelerator pedal increases.	Yes	Check other part
		No	Replace the sensor assembly

Note: This pedal is an integrated circuit device, which can not be processed through repair; therefore, during maintenance process, the service station can maintain it by means of part replacement and can not disassemble the sensor.

Downloaded from www.Manualslib.com manuals search engine

11.14 Double Brake Switch

Failure codes: P0571, P0504

No.	Operating steps	Result	Follow up steps
1	Put the ignition switch to “ON”.		Next step
2	Pull out brake switch joint on harness, and then use a multimeter to check if it is short or break circuit between 1#, 2# pins of this joint and 21#, 58# pins of ECU.	Yes	Next step
		No	Check the circuit
3	Close the ignition switch, and then check if an around 12V battery voltage is present on 3# pin of the switch joint.	Yes	Next step
		No	Check the circuit
4	Open the ignition switch, and then check if an around 12V battery voltage is present on 4# pin of the switch joint.	Yes	Next step
		No	Check the circuit
5	Release brake pedal, disconnect sensor connector, and then check if 1# and 3# pins cut off.	Yes	Next step
		No	Replace the brake switch
6	Release brake pedal, disconnect sensor connector, and then check if 2# and 3# pins conducts.	Yes	Next step
		No	Replace the brake switch
7	Apply brake pedal, disconnect sensor connector, and then check if 1# and 3# pins conducts.	Yes	Next step
		No	Replace the brake switch
8	Apply brake pedal, disconnect sensor connector, and then check if 2# and 4# pins cut off.	Yes	Check other part
		No	Replace the brake switch

Downloaded from www.Manualslib.com manuals search engine

11.15 Theft-proof Control System Failure

No.	Operating steps	Result	Follow up steps
1	Insert the ignition key into the ignition lock.		Next step
2	Put the ignition switch to ON position, and then observe if engine failure indicator lamp or EPC lamp works normally (quick flash of failure indicator lamp or EPC lamp indicates a abnormal condition).	Yes	Check other part
		No	Next step
3	Connect a diagnostic tester to the system, and then enter corresponding diagnostic program unit to check if DTC exists in the system.	Yes	Remove the failure and clear the DTC
		No	Next step
4	Pull out theft-proof module joint on harness, and then use a multimeter to check if an around 12V operating voltage is present on A1#, A4# pins of the joint when ignition switch is under ON state.	Yes	Next step
		No	Check the circuit
5	Pull out theft-proof module joint on harness, and then use a multimeter to check if such electric and circuit failures as short circuit and break circuit exist in the circuit between A5#, A8# pins of this joint and 31# and 71# pins of ECU.	Yes	Check the circuit
		No	Next step
6	Pull out theft-proof module joint on harness, and then use a multimeter to check if poor contact exists between A2# pin of this joint and ground wire of the vehicle.	Yes	Check the circuit
		No	Next step
7	Pull out theft-proof module joint on harness, and then use Ohm Shift of the multimeter to check if the circuit between B1#, B2#, B3# pins of this joint and the coil exists.	Yes	Check the circuit
		No	Replace the theft-proof module

Downloaded from www.Manualslib.com manuals search engine

12. Steps for Implementation of Failure Diagnosis by Engine Symptom

12.1 Perform Preliminary Inspection First before Following the Steps for Implementation of Failure Diagnosis by Engine Symptom.

(1) Make sure that ECU and failure indicator lamp (or EPC lamp) have no off-normal phenomenon (excluding the models that have no failure indicator lamp).
(2) Use a failure diagnostic tester to check and make sure no failure information record exists.
(3) Employ failure diagnostic tester to check that hot idle data from electronic control system fall within normal scope.

Hot idle speed parameter table:

Name	Parameter
Air intake temperature	20-70℃
Battery voltage	12-14V (affected by engine revolution)
Temperature of engine coolant	80-90℃ (normal operating temperature)
Position of accelerator pedal	0%~99.00%
Air-fuel ratio control integrator	5%-5%
Ignition advance angle	5-10° (may change with fluctuation of engine revolution)
Outer corner of throttle	0%~99.61%
Fuel injection time	2-7ms (has a strong relation with engine revolution)
Engine revolution n	Expected idle speed ± 50rpm
Duty cycle of canister control valve	0%~99.9%
Self-adapting value of air-fuel ratio control	0.95-1.05
Self-adapting value of air-fuel ratio control	120-140
Intake manifold absolute pressure	350-650hPa
Voltage of oxygen sensor	Quickly fluctuates at 0.1-0.9V
Air intake pressure	

(4) Validate that the failure effect the owner complained exists and then locate the exact position of the symptom. Please note that the information provided by the customer is very important, especially the failure symptoms, occurrence time, position and if any other failure symptoms occurred before; these information can help technical personnel rapidly and effectively judge the failure, thus increasing maintenance speed and improving maintenance quality.
Then check the appearance:

Downloaded from www.Manualslib.com manuals search engine

- Check that grounding of wire harness is clean and firm.
- Check that vacuum pipeline is unbroken, twisted and in right connection.
- Check that there is no obstruction in pipe.
- Check that air intake pipe is not squashed or damaged.
- Check that the seal between throttle body and intake manifold is perfect.
- Check that ignition cable of ignition system is unbroken, no ageing and in right wiring.
- Check that wires are in right connection, no loosing or poor connection for connectors.

Downloaded from www.Manualslib.com manuals search engine

12.2 The Engine Does not Rotate or Rotates Slowly when Starting

No.	Operating steps	Result	Follow up steps
1	Use a multimeter to check if a voltage around 10-12.5V is present between two battery terminals.	Yes	Next step
		No	Repair or replace the battery
2	Put the ignition switch to "ON". Use a multimeter to check if a battery voltage around 10-12.5V is present on the terminal on the ignition switch that connects with anode of battery.	Yes	Next step
		No	Repair wiring terminal or replace cable
3	Maintain ignition switch at START position, and then use a multimeter to check if a voltage above 8V is present on the terminal on the ignition switch that connects with pull in winding of starting motor.	Yes	Next step
		No	Replace the ignition switch
4	Put the ignition switch at start position, check the anode terminal of starting motor by multimeter and observe the voltage if it is above 8V.	Yes	Next step
		No	Repair wiring terminal Or replace cable
5	Check if it is short circuit or break circuit in the starting motor.	Yes	Repair or replace the starting motor
		No	Next step
6	Check if there is jammed by poor lubricating.	Yes	Troubleshooting
		No	Next step
7	If the failure is happened in winter time, check if it is because of the wrong engine lubricant and gearbox oil causes the big resistance of the starting motor.	Yes	Replace with appropriate oil
		No	Check if other systems are normal

Note: When this problem occurs, mainly inspect voltage, starter and ground system. In modern sedan, lubricant has little effect on startup of the vehicle, so, basically, it needs not to allow for lubricant problem, but the problem if the engine has too large self resistance should be taken into consideration.

Downloaded from www.Manualslib.com manuals search engine

12.3 When Starting, Engine Can be Dragged to Rotate but Can not Start with Success.

No.	Operating steps	Result	Follow up steps
1	Put the ignition switch to “ON”. Use a failure diagnostic tester to check if any failure information record exists.	Yes	Remove the failure displayed
		No	Next step
2	Pull out cylinder distribution wire, connect spark plug with the distance between electrode of spark plug and engine body as 8-10mm, use the starting motor to drag the engine to rotate, and then check if blue-white high-voltage spark occurs (disconnect all injection nozzles on the engine).	Yes	8
		No	Next step
3	Check if resistance value of ignition cable is normal (can not exceed 16kΩ).	Yes	Next step
		No	Repair, replace the ignition cable.
4	Check ignition coil and ignition cable for burn through, damage and crack.	Yes	Replace
		No	Next step
5	Check if ignition cable is normal.	Yes	Replace
		No	Next step
6	Check if the ignition coil is working normally.	Yes	Next step
		No	Replace
7	Check if connectors of ignition coil and ignition cable are connected properly.	Yes	Next step
		No	Connect the connectors properly
8	Put the ignition switch to “ON”. Check if fuel pump relay and fuel pump can keep working for a period of time.	Yes	Next step
		No	Overhaul the fuel pump circuit
9	Connect fuel manometer valve. Short 30# and 87# pins of fuel pump relay to make the fuel pump run, and then check if fuel pressure is around 400kPa.	Yes	Next step
		No	13
10	Pull off the fuel distributing pipe and the fuel injector; pull off the joints of fuel injector on the harness one by one. And supply the voltage of 12 V from battery to fuel injector directly and look if the fuel injector can inject normally.	Yes	12
		No	Next step
11		Yes	Next step

Downloaded from www.Manualslib.com manuals search engine

	Clean out the fuel injector and observe if it can work correctly.	No	Replace the fuel injector
12	Check if fuel is bad or moisture.	Yes	Replace fuel
		No	18
13	Check if the fuel pressure value is below 400 kPa.	Yes	Next step
		No	17
14	Close the fuel manometer valve. Re-engage the ignition switch to let the fuel pump run for a period of time, and then check if fuel pressure can be built up.	Yes	Next step
		No	16
15	Open the valve of fuel gauge and clamp the oil return pipe by oil return baffle so that the oil can not return. Check if the oil pressure occurs immediately.	Yes	Check other part
		No	Repair or replace the fuel pump
16	Check if there is leakage or jam in oil intake pipe.	Yes	Repair or replace oil intake pipe
		No	Replace oil pump
17	Check if the oil return pipe is bended or jammed.	Yes	Repair or replace oil return pipe
		No	Replace fuel pressure regulator
18	Check if it is break or short circuit between 1#, 2# pins of crankshaft position sensor and 34#, 15# pins of ECU.	Yes	Repair or replace the harness
		No	Next step
19	Check if the part of air intake system is leaking.	Yes	Repair
		No	Next step
20	Check if air flow meter works normally.	Yes	Repair or replace
		No	Next step
21	Check if the coolant temperature sensor is working correctly.	Yes	Next step
		No	Repair or replace
22	Check if the reason for the failure on starting is about mechanism, such as much cylinder clearance, cylinder leaking, and so on.	Yes	Remove the mechanical failure
		No	Replace ECU

Note: When checking this problem, if all parts in electronic fuel injection system are normal, consider if mechanical part of the engine works normally, or if cylinder pressure is normal and if air leakage exists and so forth.

Downloaded from www.Manualslib.com manuals search engine

12.4 Warm Starting Difficulty

No.	Operating steps	Result	Follow up steps
1	Put the ignition switch to “ON”. Use a special diagnostic tester to check if any failure information record exists.	Yes	Remove the failure displayed
		No	Next step
2	Connect fuel manometer valve. Short 30# and 87# pins of fuel pump relay to make the fuel pump run, and then check if fuel pressure is around 400kPa.	Yes	Next step
		No	9
3	Disconnect the connecting oil pipe and turn off the ignition switch. Observe the voltage of fuel system and look if it is around 300 kPa after an hour.	Yes	Next step
		No	Repair the fuel system to avoid leakage
4	Put the connecting oil pipe through, use fuel tube clamp to intercept the oil return pipe, meanwhile, close the fuel manometer valve. Turn off the ignition switch, after one hour, observe if pressure of fuel system still can maintain at around 400kPa.	Yes	Replace fuel pressure regulator
		No	Next step
5	Check if there is fuel leakage of fuel injector and oil pipe.	Yes	Replace the injector and fuel pipe
		No	Next step
6	Pull out water temperature sensor joint and start the engine. Observe if the engine can start with success.	Yes	Check coolant temperature and circuit
		No	Next step
7	Connect an adaptor between ECU and harness, check if a voltage around 5V is present on 39#, 17# pins, meanwhile, check if the resistance value of water temperature sensor is within normal scope.	Yes	Next step
		No	Repair or replace the harness
8	Replace ECU and perform warm start again; observe if the engine can be started successfully.	Yes	End
		No	Replace ECU
9	Check if there is jam or bending of fuel pipe and if the pressure regulator valve of oil pump is working correctly.	Yes	Next step
		No	Repair or replace
10	Check if there is battery voltage between the plugs of oil pump with multimeter.	Yes	Next step
		No	Repair or replace fuel pump relay and wires
11	Try to replace the fuel pump and see if the system can return to normal.	Yes	Next step
		No	Replace fuel pump

Downloaded from www.Manualslib.com manuals search engine

12	Check if the fuel pump is stopped up.	Yes	Replace fuel pump
		No	Replace ECU

Note: Warm starting difficulty is in connection with many systems, such as battery, throttle body and water temperature sensor etc. as well as mechanical part of the engine, such as valve sealing. Thermal expansion of engine under warm state may lead to rise of engine resistance.

Downloaded from www.Manualslib.com manuals search engine

12.5 Engine Speed is Normal, but it is Difficult to Start at any Time

No.	Operating steps	Result	Follow up steps
1	Put the ignition switch to “ON”. Use a special diagnostic tester to check if any failure information record exists.	Yes	Remove the failure displayed
		No	Next step
2	Check the air cleaner and look if it is open.	Yes	Next step
		No	Replace
3	After starting successfully, check if air intake consumption of the engine at idle speed is around 300Kg/h (remember to check if cylinder pressure is normal).	Yes	Next step
		No	Eliminate the failure of air intake system leaking
4	Step on the throttle slightly and observe if it is easy to be started easily.	Yes	Replace the electronic throttle body
5	Connect fuel manometer valve. Short 30#, 87# pins of fuel pump relay to make the fuel pump run, and then check if fuel pressure is around 400kPa.	Yes	Next step
		No	9
6	Use a special joint to directly supply a 12V voltage and intermittent ground wire from battery to injector and check if the injector works normally (work intermittently).	Yes	8
		No	Next step
7	Clean out the fuel injector and look if it can work correctly.	Yes	Next step
		No	Replace fuel injector
8	Replace fuel 8, and check if the fuel is deteriorated or moisture.	Yes	Replace fuel
		No	14
9	Check if the fuel pressure value is below 300 kPa.	Yes	Next step
		No	13
10	Close the fuel manometer valve. Re-engage the ignition switch to let the fuel pump run for 3s, and then check if fuel pressure can be built up.	Yes	Next step
		No	12
11	Open the valve of fuel gauge and clamp the oil return pipe by oil return baffle so that the oil can not return. Check if the oil pressure occurs immediately.	Yes	Replace fuel pressure regulator
		No	Repair and replace fuel injector and oil pipe
12	Check if there is leaking or jam in oil intake pipe.	Yes	Repair or replace oil intake pipe
		No	Replace oil pump
13	Check if the oil return pipe is bended or jammed.	Yes	Repair or replace oil return pipe

Downloaded from www.Manualslib.com manuals search engine

		No	Replace fuel pressure regulator
14	When engine coolant is at low temperature, pull out electronic throttle body on harness and observe if engine revolution will rise.	Yes	Next step
		No	Check electronic throttle body for damage
15	Put the ignition switch to “ON”. Check if voltage on the following pins of ECU is normal: if it is a battery voltage around 12V on 12#, 14#, 15# pins; if the voltage between 51#, 53#, 3#, 61#, 80# pins and the wire is zero.	Yes	Next step
		No	Check wires and plugs
16	Check if ignition advance angle is normal.	Yes	Next step
		No	Check other systems
17	Check if cylinder compression pressure of engine is normal, if low, add a little engine oil into each cylinder and re-measure if the cylinder pressure is normal.	Yes	Next step
		No	Troubleshooting
18	If air cleaner or airflow sensor is choked.	Yes	Repair or replace
		No	Next step
19	Check if the coolant temperature sensor is working correctly.	Yes	Replace ECU
		No	Repair or replace

Note: Note if theft-proof system has started up. After theft-proof system has started up, when starting the engine, the staring motor can run normally, but the engine can not start; therefore, please note if this system can work normally.

Downloaded from www.Manualslib.com manuals search engine

12.6 Cold Starting Difficulty

No.	Operating steps	Result	Follow up steps
1	Put the ignition switch to “ON”. Use a failure diagnostic tester to check if any failure information record exists.	Yes	Remove the failure displayed
		No	Next step
2	Use a multimeter to check if the coolant temperature sensor is normal. (A 2.8KΩ electric resistance can also be connected in series between 39# and 17# pins of ECU to start the engine in stead of the coolant temperature sensor. If the engine can start, it indicates off normal of coolant temperature sensor.)	Yes	Next step
		No	Replace the sensor
3	Put the ignition switch to “ON”. Check if voltage on the following pins of ECU is normal: if it is a battery voltage around 12V on 12#, 14#, 15# pins; if the voltage between 51#, 53#, 3#, 61#, 80# pins and the wire is zero.	Yes	Next step
		No	Check wires and plugs
4	Check the air cleaner and look if it is open.	Yes	Next step
		No	Replace
5	After starting successfully, check if air intake consumption of the engine at idle speed is around 300Kg/h (remember to check if cylinder pressure is normal).	Yes	Next step
		No	Eliminate the leakage failure of air intake system
6	Step on the throttle slightly and observe if it is easy to be started easily.	Yes	Check the electronic throttle
		No	Next step
7	When engine coolant is at low temperature, pull out electronic throttle body joint on harness and observe if engine revolution will rise.	Yes	Next step
		No	Check the electric throttle body
8	Connect fuel manometer valve. Let 86# pin of fuel pump relay directly ground. Turn on ignition switch to make fuel pump relay and fuel pump work, and then check if fuel pressure is at around 400kPa.	Yes	Next step
		No	12
9	Use a special joint to directly provide a 12V electricity and ground wire from battery to injector and check if the injector works normally.	Yes	11
		No	Next step
10	Clean out the fuel injector and look if it can work correctly.	Yes	Next step
		No	Replace fuel injector
11	Check if fuel is deteroprated or moisture.	Yes	Replace fuel

Downloaded from www.Manualslib.com manuals search engine

		No	17
12	Check if the fuel pressure value is below 300 kPa.	Yes	Next step
		No	16
13	Close the fuel manometer valve. Re-engage the ignition switch to let the fuel pump run for a period of time, and then check if fuel pressure can be built up.	Yes	Next step
		No	15
14	Open the valve of fuel gauge and clamp the oil return pipe by oil return baffle so that the oil can not return. Check if the oil pressure occurs immediately.	Yes	Check fuel pressure regulator and fuel pump
		No	Repair and replace fuel injector and oil pipe
15	Check if the oil intake pipe is leaky or jammed.	Yes	Repair or replace oil intake pipe
		No	Replace oil pump
16	Check if the oil return pipe is bended or jammed.	Yes	Repair or replace oil return pipe
		No	Replace fuel pressure regulator or fuel pump
17	Check if the pressure of cylinder is normal.	Yes	Next step
		No	Troubleshooting
18	Check if the engine air intake system is leaky.	Yes	Repair
		No	Next step
19	If air cleaner or airflow sensor is choked.	Yes	Repair or replace
		No	Replace ECU

Note: The cold starting problem relates to more failure points, among which water temperature sensor is comparatively important, because it is the major parameter for determination of injection pulse-width when starting the engine. In case of a water temperature sensor failure or it generates a false signal, the system can not judge the temperature and starting difficulty may occur.

Downloaded from www.Manualslib.com manuals search engine

12.7 Unsteady Idle Speed at Any Time

1	Put the ignition switch to “ON”. Use a failure diagnostic tester to check if any failure information record exists.	Yes	Remove the failure displayed
		No	Next step
2	Check if electronic throttle system of engine works normally.	Yes	Repair or replace the electronic throttle
		No	Next step
3	Turn on ignition switch, connect an adaptor between ECU and harness, and then check if the voltage between 17# and 42# pins of ECU, between 39# and 17# pins of ECU (signal output terminal of intake air temperature sensor and coolant temperature sensor) as well as 64#, 65#, 66#, 67# pins of ECU (for control of DC motor) is normal.	Yes	Check wires and plugs
		No	Next step
4	Let engine run at idle speed, spark out cylinder in turn, and observe if engine revolution will fall and fluctuate (cut fuel to injector).	Yes	8
		No	Next step
5	Check the fuel injectors of each cylinder and look if they are in right conditions.	Yes	Next step
		No	Check fuel injector and wires
6	Check if resistance value of ignition cable of each cylinder is normal (can not exceed 16kΩ).	Yes	Next step
		No	Replace
7	Check if ignition system works normally.	Yes	Maintain
		No	Next step
8	Check if the spark plug is in right conditions.	Yes	Next step
		No	Replace spark plug
9	Connect fuel manometer valve. Short 30# and 87# pins of fuel pump relay to make the fuel pump run, and then check if fuel pressure is around 400kPa.	Yes	Next step
		No	13
10	Use a special joint to directly provide a 12V power supply and intermittent ground wire signal from battery to injector and check if the injector can work intermittently.	Yes	12
		No	Next step
11	Clean out the fuel injector and look if it can work correctly.	Yes	Next step
		No	Replace fuel injector
12	Check if fuel is deteroprated or moisture.	Yes	Replace fuel
		No	18

Downloaded from www.Manualslib.com manuals search engine

13	Check if the fuel pressure value is below 300kPa.	Yes	Next step
		No	17
14	Close the fuel manometer valve. Re-engage the ignition switch to let the fuel pump run for a period of time, and then check if fuel pressure can be built up.	Yes	Next step
		No	16
15	Open the valve of fuel gauge and clamp the oil return pipe by oil return baffle so that the oil can not return. Check if the oil pressure occurs immediately.	Yes	Replace fuel pressure regulator
		No	Repair and replace fuel injector and oil pipe
16	Check if there is leaking or jam in oil intake pipe.	Yes	Repair or replace oil return pipe
		No	Replace oil pump
17	Check if the oil return pipe is bended or jammed.	Yes	Repair or replace oil return pipe
		No	Replace fuel pressure regulator
18	Check the pressure of air intake pipe and if the sense port of air intake temperature sensor is jammed.	Yes	Use detergent to wash
		No	Next step
19	Let engine run at idle speed, after coolant temperature reaches the active temperature of closed loop control, observe if the oxygen sensor works normally (rapidly fluctuate between 0.1V and 0.9V).	Yes	Next step
		No	Check the oxygen sensor and harness
20	Check if the engine air intake system is leaky.	Yes	Remove leakage
		No	Next step
21	Check if the pressure of cylinder is normal.	Yes	Next step
		No	Troubleshooting
22	Let engine run at idle speed, after coolant temperature reaches normal value, then use a special diagnostic tester to check if ignition advance angle is within the standard scope.	Yes	Replace ECU
		No	Check other part

Note: Unsteady idle speed relates to many systems, such as air leak, carbon deposit and throttle body etc.; before replacing a part, make sure that air cleaner, spark plug and ignition system of engine are normal.

Downloaded from www.Manualslib.com manuals search engine

12.8 Unsteady Idle Speed during Warming up Process

1	Put the ignition switch to “ON”. Use a failure diagnostic tester to check if any failure information record exists.	Yes	Remove the failure displayed
		No	Next step
2	Check the air cleaner and look if it is open.	Yes	Next step
		No	Replace
3	After starting successfully, check if air intake consumption of the engine at idle speed is around 300Kg/h (remember to check if cylinder pressure is normal).	Yes	Next step
		No	Eliminate the leakage failure of air intake system
4	Turn on ignition switch, connect an adaptor between ECU and harness, and then check if the voltage between 17# and 42# pins of ECU, between 39# and 17# pins of ECU (signal output terminal of intake air temperature sensor and coolant temperature sensor) as well as 64#, 65#, 66#, 67# pins of ECU (for control of DC motor) is normal.	Yes	Next step
		No	Overhaul
5	Before finish of warming up of engine, pull out the joint on electronic throttle body and observe if engine revolution will change.	Yes	Next step
		No	Check the electric throttle body
6	Check if the coolant temperature sensor is working correctly.	Yes	Next step
		No	Replace
7	Let engine run at idle speed, after coolant temperature reaches normal value, then use a special short diagnostic tester to check if ignition advance angle is normal.	Yes	Replace ECU
		No	Check the ignition timing mechanism

Note: Unsteady idle speed occurs seldom during warming up process, its troubleshooting is similar to that for previous case, but validate if water temperature sensor works normally in advance.

Downloaded from www.Manualslib.com manuals search engine

12.9. Unsteady Idle Speed after Warming up

1	Put the ignition switch to “ON”. Use a failure diagnostic tester to check if any failure information record exists.	Yes	Remove the failure displayed
		No	Next step
2	Turn on ignition switch, connect an adaptor between ECU and harness, and then check if the voltage between 17# and 42# pins of ECU, between 39# and 17# pins of ECU (signal output terminal of intake air temperature sensor and coolant temperature sensor) as well as 64#, 65#, 66#, 67# pins of ECU (for control of DC motor) is normal.	Yes	Next step
		No	Repair or replace the harness
3	Turn off the engine. Check the air cleaner and look if it is open.	Yes	Next step
		No	Replace
4	After starting successfully, check if air intake consumption of the engine at idle speed is around 300Kg/h (remember to check if cylinder pressure is normal).	Yes	Next step
		No	Eliminate the leakage failure of air intake system
5	Connect fuel manometer valve. Short 30# and 87# pins of fuel pump relay to make the fuel pump run, and then check if fuel pressure is around 400kPa.	Yes	Next step
		No	9
6	Use a special joint to directly provide a 12V power supply and intermittent ground wire from battery to injector and check if the injector can work intermittently.	Yes	8
		No	Next step
7	Clean out the fuel injector and look if it can work correctly.	Yes	Replace
		No	Replace fuel injector
8	Check if fuel is deteroprated or moisture.	Yes	Replace fuel
		No	14
9	Check if the fuel pressure value is below 300kPa.	Yes	Next step
		No	13
10	Close the fuel manometer valve. Re-engage the ignition switch to let the fuel pump run for a period of time, and then check if fuel pressure can be built up.	Yes	Next step
		No	12
11	Open the valve of fuel gauge and clamp the oil return pipe by oil return baffle so that the oil can not return. Check if the oil pressure occurs immediately.	Yes	Replace fuel pressure regulator
		No	Repair and replace fuel injector and oil pipe

Downloaded from www.Manualslib.com manuals search engine

12	Check if there is leaking or jam in oil intake pipe.	Yes	Repair or replace oil intake pipe
		No	Replace oil pump
13	Check if the oil return pipe is bended or jammed.	Yes	Repair or replace oil return pipe
		No	Replace fuel pressure regulator
14	Let engine run at idle speed, after coolant temperature reaches normal value, then use a diagnostic tester to check if ignition advance angle is normal.	Yes	Next step
		No	Check other systems
15	Pull off the coolant temperature sensor and observe if the engine is in right conditions.	Yes	Replace the coolant temperature sensor
		No	Next step
16	Check if the compression pressure of cylinder is normal.	Yes	Next step
		No	Troubleshooting
17	Check if resistance value of ignition cable of each cylinder is normal (can not exceed 16kÙ).	Yes	Next step
		No	Replace
18	Check if ignition coil and ignition cable system works normally and if crack exists on ignition coil.	Yes	Replace
		No	Next step
19	Check if the spark plug is in right conditions.	Yes	Replace ECU
		No	Replace spark plug

Note: After finish of warming up, engine will enter normal idle speed state, under which, unsteady revolution is in connection to many factors, such as spark plug, ignition cable, ignition coil, if air leak exists in the system, if carbon deposit exists in the system and if cylinder pressure is normal an so forth.

Downloaded from www.Manualslib.com manuals search engine

12.10 Unsteady Idle Speed or Extinguish with Load (A/C etc.)

1	Put the ignition switch to "ON". Use a failure diagnostic tester to check if any failure information record exists.	Yes	Remove the failure displayed
		No	Next step
2	Turn on A/C switch, connect an adaptor between ECU and harness, and then measure 75# pin of ECU to see if input signal is present (high potential signal loaded by A/C switch through high and low voltage switches).	Yes	Next step
		No	Check and repair air conditioning circuit
3	Check if the pressure of air conditioning system, the electromagnetic clutch of compressor and the air conditioning pump are in right conditions.	Yes	Next step
		No	Repair or replace
4	Check the voltage on 64#, 65#, 66# and 67# pins of ECU (for control of DC motor) as well as corresponding pins on valve body is normal.	Yes	Next step
		No	Check controlling circuit
5	Remove electronic throttle body and check if throttle is locked or is dumb to run.	Yes	Check the electric throttle body
		No	Next step
6	Start engine, turn on A/C, use a failure diagnosis tester to read such signals as air intake flow and engine revolution and check if engine acceleration occurs.	Yes	Replace ECU
		No	Replace the electronic throttle body

Note: 75# pin is the up level request signal. When turning on A/C switch, an up level signal will be sent to ECU through this pin, and then ECU will further check other systems of A/C. If all systems are normal, ECU will control A/C relay to ground and A/C system will start to work. 60# pin of ECU is medium voltage signal input; when high potential signal is loaded on this pin, cooling fan will start and run at high speed.

Downloaded from www.Manualslib.com manuals search engine

12.11 Periodic Unsteadiness (Have to Perform Self-study again after ECU is Power off)

1	Put the ignition switch to “ON”. Use a failure diagnostic tester to check if any failure information record exists.	Yes	Remove the failure displayed
		No	Next step
2	Check the air cleaner and look if it is open.	Yes	Next step
		No	Replace
3	After starting successfully, check if air intake consumption of the engine at idle speed is around 300Kg/h (remember to check if cylinder pressure is normal).	Yes	Next step
		No	Check and repair air intake and leak
4	Let engine run at idle speed, spark out cylinder in turn, and observe if engine revolution will fall and fluctuate (it is prohibited to carry out spark out experiment by disconnecting ignition cable).	Yes	7
		No	Next step
5	Turn on ignition switch, connect an adaptor between ECU and harness, and then check if the voltage between 17# and 42# pins of ECU, between 39# and 17# pins of ECU (signal output terminal of intake air temperature sensor and coolant temperature sensor) as well as 64#, 65#, 66#, 67# pins of ECU (for control of DC motor) is normal.	Yes	Next step
		No	Repair or replace cable
6	Let engine run at idle speed, after coolant temperature reaches normal value, then use a diagnostic tester to check if ignition advance angle of the system is normal.	Yes	Next step
		No	Check other part
7	Check air intake system for such failures that may affect working of engine as blocking and air leak etc.	Yes	Sweep
		No	Next step
8	Check if fuel is deteroprated or moisture.	Yes	Replace fuel
		No	Next step
9	Use a special joint to directly provide a 12V power supply and intermittent ground wire from battery to injector and check if the injector can work intermittently.	Yes	Next step
		No	Check and repair oil injector and related wires
10	Check if the resistance values of cylinders’ ignition cable are normal.	Yes	Next step
		No	Replace
11	Check if the ignition coil is damaged or cracked.	Yes	Replace
		No	Next step

Downloaded from www.Manualslib.com manuals search engine

12	Check if the spark plug is in right conditions.	Yes	Replace ECU
		No	Replace spark plug

Note: For periodic unsteadiness, mainly check air intake system for air leak or electronic throttle body for failure. Following are the steps for inspection of electronic throttle body: while turning on ignition key, throttle may jiggle; during self-checking procedure, throttle should act with actions of accelerator pedal.

Downloaded from www.Manualslib.com manuals search engine

12.12 Too High Idle Speed (Have to Perform Self-study again after ECU is Power off)

1	Put the ignition switch to “ON”. Use a failure diagnostic tester to check if any failure information record exists.	Yes	Remove the failure displayed
		No	Next step
2	Check if throttle valve plate is locked and if failure exists in electronic throttle body.	Yes	Adjust or replace
		No	Next step
3	Check if the canister control valve, the fuel pressure regulator, the positive crankcase ventilation vacuum pipe and the vacuum pipe of brake system are mounted steadily or they are damaged.	Yes	Repair or replace
		No	Next step
4	Run the engine at idle speed and use neutral. Step on the accelerator and observe if the idle speed is too high.	Yes	Next step
		No	6
5	Clamp the vacuum pipe and observe if the idle speed becomes normal.	Yes	Repair or replace the vacuum booster
		No	Next step
6	Replace PVC valve and clamp the positive crankcase ventilation vacuum pipe. Observe if the idle speed becomes normal.	Yes	Replace PVC valve
		No	Next step
7	Clamp the canister control valve pipe and observe if the idle speed becomes normal.	Yes	Replace the canister control valve
		No	Next step
8	Check if electronic throttle body is dumb or locked.	Yes	Repair or replace
		No	Next step
9	Check other parts of air intake pipe for leakage.	Yes	Repair or replace
		No	Next step
10	Check if the gasket of fuel injector is in good condition.	Yes	Next step
		No	Replace the gasket
11	Check air intake system for air leak and air flow meter for normal working.	Yes	Replace ECU
		No	Replace the sensor

Note: Check if the system goes through self-study, if not, the system will be under failure mode or an uncertain state all the time, which may result in too high idle speed of engine. The other cause is air leak in the system, if air leakage in the system is too large and exceeds regulation and control range of ECU, idle speed fluctuation may occur.

Downloaded from www.Manualslib.com manuals search engine

12.13. Engine Revolution Speed is too Low or Flameout

1	Put the ignition switch to “ON”. Use a failure diagnostic tester to check if any failure information record exists.	Yes	Remove the failure displayed
		No	Next step
2	Check the air cleaner and look if it is open.	Yes	Next step
		No	Replace
3	Run the engine at idle speed and check if the engine revolution speed is normal at idle speed.	Yes	Next step
		No	Next step, overhaul with reference to idle speed failure entries
4	After starting successfully, check if air intake consumption of the engine at idle speed is around 300Kg/h (remember to check if cylinder pressure is normal).	Yes	Next step
		No	Overhaul
5	Let engine run at idle speed, after coolant temperature reaches normal value, then use a diagnostic tester to check if ignition advance angle of the system is normal.	Yes	Next step
		No	Check other systems
6	Connect fuel manometer valve. Short 30# and 87# pins of fuel pump relay to make the fuel pump run, and then check if fuel pressure is around 400kPa.	Yes	Next step
		No	10
7	Use a special joint to directly provide a 12V power supply and intermittent ground wire from battery to injector and check if the injector can work intermittently.	Yes	9
		No	Next step
8	Clean out the fuel injector and look if it can work correctly.	Yes	Next step
		No	Replace fuel injector
9	Check if fuel is bad or moisture.	Yes	Replace fuel
		No	15
10	Check if the fuel pressure value is below 350 kPa.	Yes	Next step
		No	14
11	Close the fuel manometer valve. Re-engage the ignition switch to let the fuel pump run for a period of time, and then check if fuel pressure can be built up.	Yes	Next step
		No	13
12	Open the valve of fuel gauge and clamp the oil return pipe by oil return baffle so that the oil can	Yes	Replace fuel pressure regulator

Downloaded from www.Manualslib.com manuals search engine

	return pipe by oil return baffle so that the oil can not return. Check if the oil pressure occurs immediately.	No	Repair and replace fuel injector and oil pipe
13	Check if there is leaking or jam in oil intake pipe.	Yes	Repair or replace oil intake pipe
		No	Replace oil pump
14	Check if the oil return pipe is bended or jammed.	Yes	Repair or replace oil return pipe
		No	Replace fuel pressure regulator
15	Put the ignition switch to "ON". Check if voltage on the following pins of ECU is normal: if it is a battery voltage around 12V on 12#, 14#, 15# pins; if the voltage between 51#, 53#, 3#, 61#, 80# pins and the wire is zero.	Yes	Next step
		No	Repair or replace cable
16	Check if ignition coil, ignition cable and spark plug are normal.	Yes	Replace ECU
		No	Adjust or replace the parts involved

Note: This phenomenon indicates a comparatively obvious failure and some minute details, such as if strainer of the system or exhaust pipe is blocked and so forth, should also be checked. For other causes, check spark plug and ignition cable etc.

Downloaded from www.Manualslib.com manuals search engine

12.14 Slow Response when Accelerating

1	Put the ignition switch to “ON”. Use a failure diagnostic tester to check if any failure information record exists.	Yes	Remove the failure displayed
		No	Next step
2	Turn off the engine. Check the air cleaner and look if it is open.	Yes	Next step
		No	Replace
3	Run the engine at idle speed and check if the engine revolution speed is normal at idle speed.	Yes	Next step
		No	Repair in accordance with idle speed failure item
4	Run the engine at idle speed and check if the air intake pressure is from 35 to 65 kPa.	Yes	Next step
		No	Overhaul
5	Put the ignition switch to “ON”. Check if it is break or short circuit between 38#, 32#, 54#, 36# pins on ECU connector and 1#, 2#, 4#, 6# pins of throttle position sensor of electronic throttle valve body.	Yes	Next step
		No	Repair or replace Harness
6	Let engine run at idle speed, after coolant temperature reaches normal value, then use a diagnostic tester to check if ignition advance angle is normal.	Yes	Next step
		No	Check other part
7	Connect fuel manometer valve. Short 30# and 87# pins of fuel pump relay to make the fuel pump run, and then check if fuel pressure is around 4000kPa.	Yes	Next step
		No	11
8	Use a special joint to directly provide 12V power supply and intermittent 12V power supply from battery to injector and check if the injector can work intermittently.	Yes	10
		No	Next step
9	Clean out the fuel injector and look if it can work correctly.	Yes	Next step
		No	Replace fuel injector
10	Check if fuel is bad or moisture.	Yes	Replace fuel
		No	16
11	Check if the fuel pressure value is below 300 kPa.	Yes	Next step
		No	15
12	Close the fuel manometer valve. Re-engage the ignition switch to let the fuel pump run for a period of time, and then check if fuel pressure can be built up.	Yes	Next step
		No	14

Downloaded from www.Manualslib.com manuals search engine

13	Open the valve of fuel gauge and clamp the oil return pipe by oil return baffle so that the oil can not return. Check if the oil pressure occurs immediately.	Yes	Replace the pressure regulator
		No	Repair and replace fuel injector and oil pipe
14	Check if there is leaking or jam in oil intake pipe.	Yes	Repair or replace oil intake pipe
		No	Replace oil pump
15	Check if the oil return pipe is bended or jammed.	Yes	Repair or replace oil return pipe
		No	Replace the pressure regulator
16	Check if the exhaust system and three-way catalytic converter are jammed.	Yes	Replace or clean
		No	Replace ECU

Note: For slow response when accelerating, mainly check air intake pressure and injection pulse-width etc.; choked exhaust pipe and smudgy air cleaner may be causes for this problem. In addition, spark plug and ignition cable problems may also be causes.

Downloaded from www.Manualslib.com manuals search engine

12.15 Poor Performance and Disability when Accelerating.

1	Check if failure occurs, such as clutch slipping, low tire pressure, brake delay, wrong tire size and incorrect four-wheel alignment.	Yes	Repair
		No	Next step
2	Check if the electronic throttle can be full opening.	Yes	Next step
		No	Repair or replace the throttle
3	Put the ignition switch to “ON”. Use a failure diagnostic tester to check if any failure information record exists.	Yes	Remove the failure displayed
		No	Next step
4	Let engine run at idle speed, after coolant temperature reaches normal value, then use a diagnostic tester to check the ignition advance angle.	Yes	Next step
		No	Check the parts involved
5	Put the ignition switch to “ON”. Check if it is break or short circuit between 38#, 32#, 54#, 36# pins on ECU connector and 1#, 2#, 4#, 6# pins of throttle position sensor of electronic throttle valve body. check if the voltage between 17# and 42# pins of ECU, between 39# and 17# pins of ECU (signal output terminal of intake air temperature sensor and coolant temperature sensor) as well as 64#, 65#, 66#, 67# pins of ECU (for control of DC motor) is normal.	Yes	Next step
		No	Repair or replace Harness
6	Run the engine at idle speed and check if the air intake pressure is from 35 to 65kPa.	Yes	Next step
		No	Overhaul
7	Connect fuel manometer valve. Short 30# and 87# pins of fuel pump relay to make the fuel pump run, and then check if fuel pressure is around 400kPa.	Yes	Next step
		No	11
8	Use a special joint to directly provide a 12V power supply and intermittent ground wire from battery to injector and check if the injector can work intermittently.	Yes	10
		No	Next step
9	Clean out the fuel injector and look if it can work correctly.	Yes	Next step
		No	Replace fuel injector
10	Check if fuel is deteroprated or moisture.	Yes	Replace fuel
		No	16
11	Check if the fuel pressure value is below 300 kPa.	Yes	Next step
		No	15

Downloaded from www.Manualslib.com manuals search engine

12	Close the fuel manometer valve. Re-engage the ignition switch to let the fuel pump run for a period of time, and then check if fuel pressure can be built up.	Yes	Next step
		No	14
13	Open the valve of fuel gauge and clamp the oil return pipe by oil return baffle so that the oil can not return. Check if the oil pressure occurs immediately.	Yes	Replace the pressure regulator
		No	Repair and replace fuel injector and oil pipe
14	Check if there is leaking or jam in oil intake pipe.	Yes	Repair or replace oil intake pipe
		No	Replace oil pump
15	Check if the oil return pipe is bended or jammed.	Yes	Repair or replace oil return pipe
		No	Replace the pressure regulator
16	Check if leak and blocking exist in air intake system and if air flow meter works normally.	Yes	Next step
		No	Replace the sensor
17	Check if spark plug, ignition cable and ignition coil are normal.	Yes	Next step
		No	Replace or adjust
18	Check if it results from air conditioning system.	Yes	Check A/C system
		No	Replace ECU

Note: Poor acceleration of system relates to many factors, such as problem in mechanical part of the engine itself, cylinder pressure and carbon deposit on valve etc. In addition, it is also in connection with other systems, such as power steering system and A/C system.

Downloaded from www.Manualslib.com manuals search engine

12.16 Unable to Reach the Maximum Revolution when Accelerating

1	Put the ignition switch to “ON”. Use a failure diagnostic tester to check if any failure information record exists.	Yes	Remove the failure displayed
		No	Next step
2	With engine off, check if air cleaner is smooth (can not simply rely on visualization, remove the air cleaner and then perform test drive again) and if air intake system is chocked.	Yes	Next step
		No	Replace
3	Run the engine at idle speed and check if the engine revolution speed is normal at idle speed.	Yes	Next step
		No	Repair in accordance with idle speed failure item
4	After starting successfully, check if air intake consumption of the engine at idle speed is around 300Kg/h (remember to check if cylinder pressure is normal).	Yes	Next step
		No	Overhaul
5	Put the ignition switch to “ON”. Check if it is break or short circuit between 38#, 32#, 54#, 36# pins on ECU connector and 1#, 2#, 4#, 6# pins of throttle position sensor of electronic throttle valve body.	Yes	Next step
		No	Repair or replace Harness
6	Let engine run at idle speed, after coolant temperature reaches normal value, then use a diagnostic tester to check if ignition advance angle is normal.	Yes	Next step
		No	Check other part
7	Connect fuel manometer valve. Short 30# and 87# pins of fuel pump relay to make the fuel pump run, and then check if fuel pressure is around 400kPa.	Yes	Next step
		No	11
8	Check if working positions of camshaft position sensor and crankshaft position sensor are normal.	Yes	Next step
		No	Replace the parts involved
9	Clean out the fuel injector and look if it can work correctly.	Yes	Next step
		No	Replace fuel injector
10	Check if fuel is deteroprated or moisture.	Yes	Replace fuel
		No	16
11	Check if the fuel pressure value is below 300 kPa.	Yes	Next step
		No	15
12		Yes	Replace or clean

Downloaded from www.Manualslib.com manuals search engine

	Check if the exhaust system and three-way catalytic converter are jammed.	No	Replace ECU

Note: In case the engine is unable to reach its maximum revolution when accelerating, mainly check if exhaust pipe is chocked and air cleaner is smudgy. In addition, for electric control system of A21, in case of a failure in crankshaft or camshaft position sensor, ECU will take restrictive driving measures to restrict engine revolution to exceed certain value, which should be noted during maintenance process.

Downloaded from www.Manualslib.com manuals search engine

12.17 When Releasing Accelerator Pedal after Acceleration, Unsteady Idle Speed Occurs at Instant, even Extinguishes.

1	Put the ignition switch to “ON”. Use a failure diagnostic tester to check if any failure information record exists.	Yes	Remove the failure displayed
		No	Next step
2	With engine off, check if air cleaner is smooth (can not simply rely on visualization, remove the air cleaner and then perform test drive again) and if air intake system is chocked.	Yes	Next step
		No	Replace
3	Run the engine at idle speed and check if the engine revolution speed is normal at idle speed.	Yes	Next step
		No	Repair in accordance with idle speed failure item
4	After starting successfully, check if air intake consumption of the engine at idle speed is around 300Kg/h (remember to check if cylinder pressure is normal).	Yes	Next step
		No	Overhaul
5	Put the ignition switch to “ON”. Check if it is break or short circuit between 38#, 32#, 54#, 36# pins on ECU connector and 1#, 2#, 4#, 6# pins of throttle position sensor of electronic throttle valve body.	Yes	Next step
		No	Repair or replace Harness
6	Let engine run at idle speed, after coolant temperature reaches normal value, then use a diagnostic tester to check if ignition advance angle is normal.	Yes	Next step
		No	Check other part
7	Connect fuel manometer valve. Short 30# and 87# pins of fuel pump relay to make the fuel pump run, and then check if fuel pressure is around 400kPa.	Yes	Next step
		No	11
8	Remove air intake hose, check if carbon deposit or other soil (this may result in air intake system of engine being chocked when the valve plate closes) exists.	Yes	Clear carbon deposit
		No	Next step
9	Clean out the fuel injector and look if it can work correctly.	Yes	Next step
		No	Replace fuel injector
10	Check if fuel is deteroprated or moisture.	Yes	Replace fuel
		No	16
11		Yes	Next step

Downloaded from www.Manualslib.com manuals search engine

	Check if the fuel pressure value is below 400 kPa.	No	15
12	Check if the exhaust system and three-way catalytic converter are jammed.	Yes	Replace or clean
		No	Replace ECU

Note: For an electric control motor with the electronic throttle body, the main actuators of its air intake system are air flow meter and electronic throttle body. Air flow meter has very high operational reliability and very low failure rate, while, due to particularity of road status in China and affected by operating environment, choke is liable to occur between valve plate and valve body of the electronic throttle body, which may obstruct air from entering the engine and result in extinguish of engine.

Downloaded from www.Manualslib.com manuals search engine

12.18 A/C System Failure

1	Check if there is enough coolant, if the A/C belt, the A/C clutch and the pressure switch are in good condition.	Yes	Next step
		No	Troubleshooting
2	Let engine run at idle speed and turn on A/C switch. Enter A/C self diagnosis mode to check the A/C system for failure.	Yes	Remove the failure displayed
		No	Next step
3	Turn on the A/C switch and connect an adaptor between ECU and harness. Measure 75# pin (A/C switch) of ECU and see if there are input signals on it.	Yes	Next step
		No	Check the harness
4	If this vehicle adopts low level control, check if the air condition is working still even though it is turned off.	Yes	Replace or repair the harness
		No	Next step
5	Check if there is low level output at ECU pin No.69 (connect to the ground of pull in winding of A/C relay).	Yes	Repair the A/C replay and harness
		No	Replace ECU

Note: Different from the controlling means of other models, the A/C control system of A21 adopts the automatic A/C and uses double-pressure switch to control incorporation of the A/C system and the fan after A/C starts up.

Downloaded from www.Manualslib.com manuals search engine

13. Safety Precautions for System Maintenance

13.1 Safety Precautions for Diagnosis and Maintenance of Gasoline Injection Electronic Control System

(1) Disassembly and assembly requirements for electronic control unit (ECU):

- Controllers shall be removed before welding or paint-baking;
- When disassembling and installing the controller, be sure to set ignition switch to CLOSE position and disconnect the battery with the system for fear to damage the engine control unit during disassembly and installation.
- Power supply wires shall not be removed from battery when engine is in operation or electric system is in use;
- Do not use such heavy current equipment as charger etc. to start the engine by direct bridging;
- Note that the ambient temperature for the controller should not exceed 80℃.

(2) Requirements for cleanness: the following rules should be observed for any operation on oil-supply system and oil-injection system:

- The parts removed should be place at a clean site and covered properly; do not use the cloth (cotton cloth and gauze) with falling off fibre;

(3) Connect and disconnect the connectors of all sorts of harnesses and the connectors of failure diagnosis testers only after the ignition switch is turned off.

- When measuring mains voltage or ground wire grounding of the electronic control system, be sure to check if the connection order and mode are correct;
- Disconnect power cord or ground wire of battery from the system and disconnect harness connector of ECU; both operation modes above may cause loss of information about diagnosis and self-study stored in ECU (the retention time of information after the ECU installed is power off depends on the model).

(4) **Attentions during maintenance of fuel feed system (fuel feed line, fuel pump and fuel injection system):**

Disassembly or installation of oil pump on the tank full of oil or partly full of oil, please note:

- Before operation, get material ready near the fuel tank opening for absorption of heavy discharging fuel, so that, the fuel discharged can be duly absorbed;
- Avoid skin from direct contact with gasoline as best as you can;
- Before loosening a connection part, thoroughly clean this part and the area around the connecting pieces;
- Dishcloth shall be placed around the connecting part for avoide oil-spraying;

Downloaded from www.Manualslib.com manuals search engine

- If disassembled parts can not be repaired or for other processing immediately, store them properly.
- The spare parts can be taken out of their package only when they are to be installed; do not use the spare parts without package or with package heavily damaged;
- When installing an injector, be careful not to damage the O-gaskets at both ends of the injector; for installation convenience, apply a little lubricant on the O-gaskets.
- After fuel and fuel feed systems are disassembled, avoid use of compressed air and move of the vehicle as best as you can.

(5) **Safety precaution**

In order to avoid maintenance technical personnel from being injured and fuel injection and ignition devices from being damaged, please note:

In case the engine is running or under starting speed, disconnection of ignition harness is forbidden. Checking the engine for poor working of single cylinder **by means of spark test with ignition cable disconnected is not allowed**;

if it is required to drag the engine by the starter without starting the engine itself, for example, in the case of inspection of cylinder pressure of engine etc., disconnect the harness connectors on engine revolution sensor and camshaft (phase) sensor and connect each sensor properly after the corresponding job has finished, and then use a special diagnostic tester for Chery to clear the failure codes in the system;

When the engine is running at high speed, touching wheel train of engine and revolving parts are forbidden;

When the engine reaches normal operating temperature, both water temperature and pressure of cooling system are very high; therefore, in case maintenance for the cooling system of engine is required, perform corresponding operations only after the engine has stopped and the cooling system has been fully cooled.

When maintaining fuel system of engine, if maintenance for engine compartment is involved, perform the operations only after temperature inside engine compartment of the vehicle has adequately fell;

Under a state that power on of the system is normal, do not touch cooling fan of the engine by hand at any time, because the cooling fan may start up abruptly.

Downloaded from www.Manualslib.com manuals search engine