# OPEL INSIGNIA

## Owner's Manual

Wir leben Autos.

# Contents

Introduction ..... 2
In brief ..... 6
Keys, doors and windows ..... 21
Seats, restraints ..... 42
Storage ..... 63
Instruments and controls ..... 79
Lighting ..... 118
Climate control ..... 129
Driving and operating ..... 138
Vehicle care ..... 191
Service and maintenance ..... 236
Technical data ..... 239
Customer information ..... 312
Index ..... 314

# Introduction

| | | | | |
|---|---|---|---|---|
| Fuel | Designation | | | |
| Engine oil | Grade | | | |
| | Viscosity | | | |
| Tyre pressure | | Tyre size | Front | Rear |
| | Summer tyres | | | |
| | Winter tyres | | | |
| Weights | | | | |
| | Gross vehicle weight rating | | | |
| | - Kerb weight, basic model | | | |
| | = Loading | | | |

## Vehicle specific data

Please enter your vehicle's data on the previous page to keep it easily accessible. This information is available in the sections "Service and maintenance" and "Technical data" as well as on the identification plate.

## Introduction

Your vehicle is a designed combination of advanced technology, safety, environmental friendliness and economy.

This Owner's Manual provides you with all the necessary information to enable you to drive your vehicle safely and efficiently.

Make sure your passengers are aware of the possible risk of accident and injury which may result from improper use of the vehicle.

You must always comply with the specific laws and regulations of the country that you are in. These laws may differ from the information in this Owner's Manual.

When this Owner's Manual refers to a workshop visit, we recommend your Opel Service Partner. For gas vehicles we recommend an Opel Repairer authorised for servicing gas vehicles.

All Opel Service Partners provide first-class service at reasonable prices. Experienced mechanics trained by Opel work according to specific Opel instructions.

The customer literature pack should always be kept ready to hand in the vehicle.

## Using this manual

- This manual describes all options and features available for this model. **Certain descriptions, including those for display and menu functions, may not apply to your vehicle due to model variant, country specifications, special equipment or accessories.**
- The "In brief" section will give you an initial overview.
- The table of contents at the beginning of this manual and within each section shows where the information is located.
- The index will enable you to search for specific information.
- This Owner's Manual depicts left-hand drive vehicles. Operation is similar for right-hand drive vehicles.
- The Owner's Manual uses the factory engine designations. The corresponding sales designations can be found in the section "Technical data".
- Directional data, e.g. left or right, or front or back, always relate to the direction of travel.
- The vehicle display screens may not support your specific language.
- Display messages and interior labelling are written in **bold** letters.

## Danger, Warnings and Cautions

**⚠ Danger**

Text marked ⚠ **Danger** provides information on risk of fatal injury. Disregarding this information may endanger life.

**⚠ Warning**

Text marked ⚠ **Warning** provides information on risk of accident or injury. Disregarding this information may lead to injury.

**Caution**

Text marked **Caution** provides information on possible damage to the vehicle. Disregarding this information may lead to vehicle damage.

## Symbols

Page references are indicated with ⇨.
⇨ means "see page".

We wish you many hours of pleasurable driving.

**Adam Opel AG**

# In brief

## Initial drive information

## Vehicle unlocking

Press button 🔓 to unlock the doors and load compartment. Open the doors by pulling the handles. To open the tailgate, pull the button under the tailgate moulding.

Press button 🚗; only the load compartment is unlocked and opens.

Radio remote control ⇨ 21, Central locking system ⇨ 23, Load compartment ⇨ 26.

## Seat adjustment

### Seat positioning

Pull handle, slide seat, release handle.

Seat position ⇨ 44, Seat adjustment ⇨ 44.

**⚠ Danger**

Do not sit nearer than 25 cm from the steering wheel, to permit safe airbag deployment.

## Seat backrests

Pull lever, adjust inclination and release lever. Allow the seat to engage audibly.

Seat position ⇨ 44, Seat adjustment ⇨ 44.

## Seat height

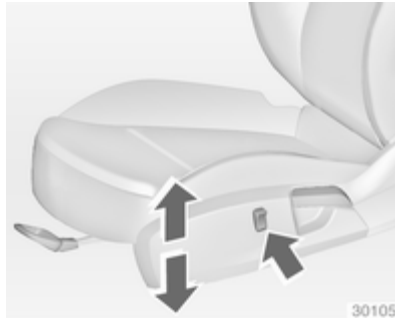


Press switch

top = seat higher
bottom = seat lower

Seat position ⇨ 44, Seat adjustment ⇨ 44.

## Seat inclination

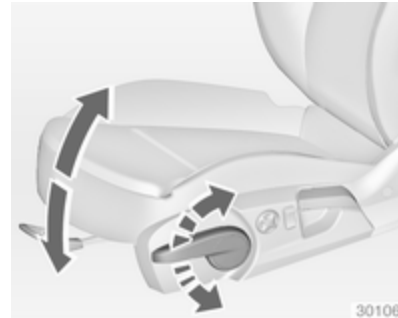


Lever pumping motion

up = front end higher
down = front end lower

Seat position ⇨ 44, Seat adjustment ⇨ 44.

## Power seat adjustment

Operate switches.

| | | |
|---|---|---|
| positioning | = | move switch (1) forwards/backwards |
| height | = | move switch (1) upwards/downwards |
| inclination | = | move switch (1) upwards/downwards at front |
| backrest | = | turn switch (2) forwards/backwards |

## Head restraint adjustment

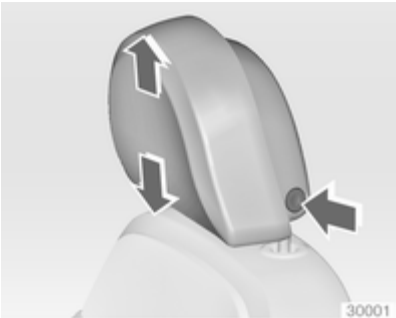


Press release button, adjust height, engage.

Head restraints ⇨ 42.

## Seat belt

Pull out the seat belt and engage in belt buckle. The seat belt must not be twisted and must fit close against the body. The backrest must not be tilted back too far (maximum approx. 25°).

To release belt, press red button on belt buckle.

Seat position ⇨ 44, Seat belts ⇨ 50, Airbag system ⇨ 53.

# Mirror adjustment

## Interior mirror

Adjust the lever on the underside to reduce dazzle.

Interior mirror ⇨ 35, Automatic anti-dazzle interior mirror ⇨ 36.

## Exterior mirrors

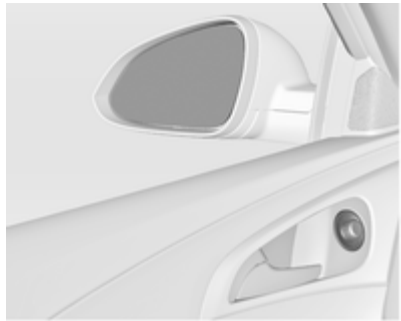

Select the relevant exterior mirror and adjust.

Convex exterior mirrors ⇨ 33, Electric adjustment ⇨ 33, Folding exterior mirrors ⇨ 34, Heated exterior mirrors ⇨ 35.

# Steering wheel adjustment

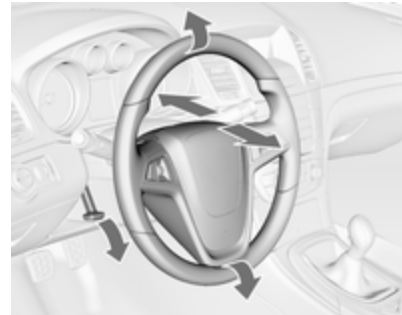

Unlock lever, adjust steering wheel, then engage lever and ensure it is fully locked. Do not adjust steering wheel unless vehicle is stationary and steering wheel lock has been released.

Airbag system ⇨ 53, Ignition positions ⇨ 139.

## Instrument panel overview

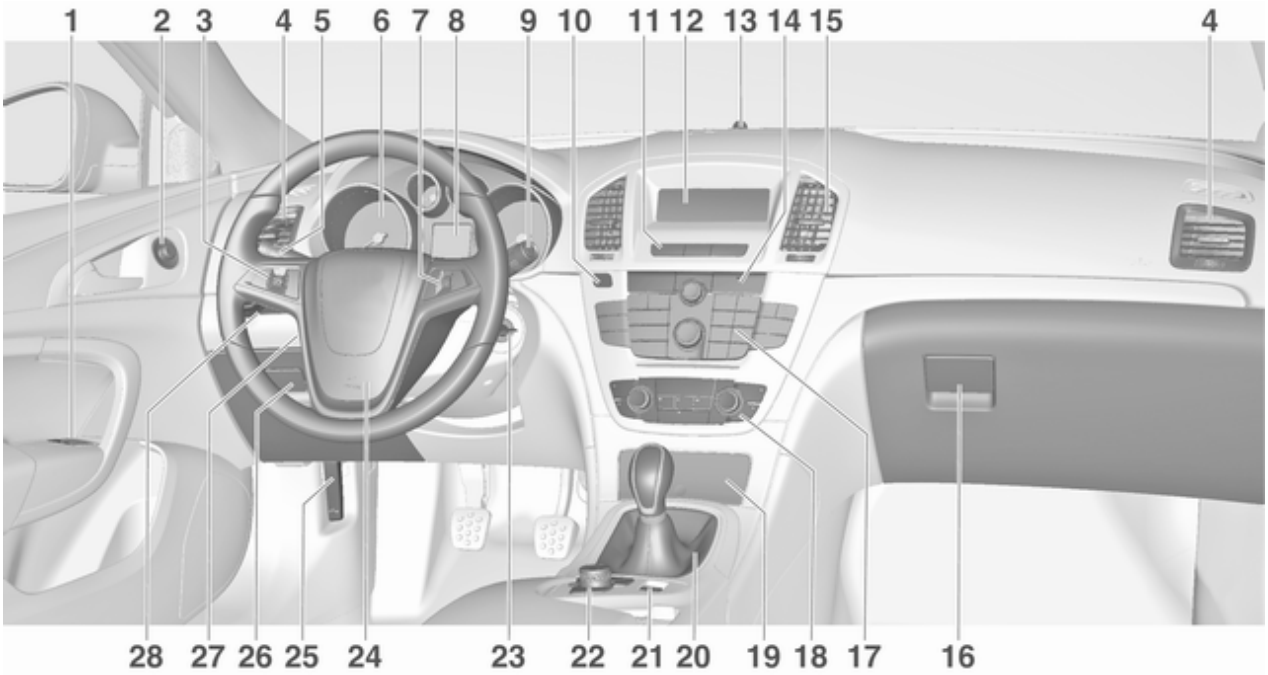

1 Power windows ..... 36
2 Exterior mirrors ..... 33
3 Cruise control ..... 157
Adaptive cruise control ..... 158
Forward collision alert ..... 165
4 Side air vents ..... 136
5 Turn and lane-change signals, headlight flash, low beam and high beam, high beam assist ..... 123
Exit lighting ..... 127
Parking lights ..... 124
Buttons for Driver Information Centre ..... 98
6 Instruments ..... 87
7 Steering wheel controls ..... 79
8 Driver Information Centre ..... 98
9 Windscreen wiper, windscreen washer system, headlight washer system, rear wiper, rear washer system ..... 81
10 Eco button for stop-start system ..... 140
Fuel selector button ..... 88
11 Central locking system ..... 23
Hazard warning flashers .... 123
Control indicator for airbag deactivation ..... 93
Control indicator for front passenger seat belt ..... 92
12 Info-Display ..... 103
13 Anti-theft alarm system status LED ..... 31
14 Sport mode ..... 154
Tour mode ..... 154
Traction Control system ..... 153
Electronic Stability Control . 154
Parking assist ..... 171
Advanced parking aid ..... 171
Lane departure warning ..... 179
Heated steering wheel ..... 80
15 Centre air vents ..... 136
16 Glovebox ..... 63
17 Multifunction knob ..... 103
18 Climate control system ..... 129
19 Ashtray ..... 86
20 Selector lever, manual transmission ..... 149
Automatic transmission ..... 145
21 Electrical parking brake ..... 151
22 Multifunction unit ..... 103
23 Ignition switch with steering wheel lock ..... 139
24 Horn ..... 80
Driver airbag ..... 54
25 Bonnet release lever ..... 193
26 Storage compartment ..... 64
Fuse box ..... 212
27 Steering wheel adjustment . . 79
28 Light switch ..... 118
Headlight range adjustment ..... 120
Front fog lights ..... 124

Rear fog light ..... 124
Instrument illumination ..... 125

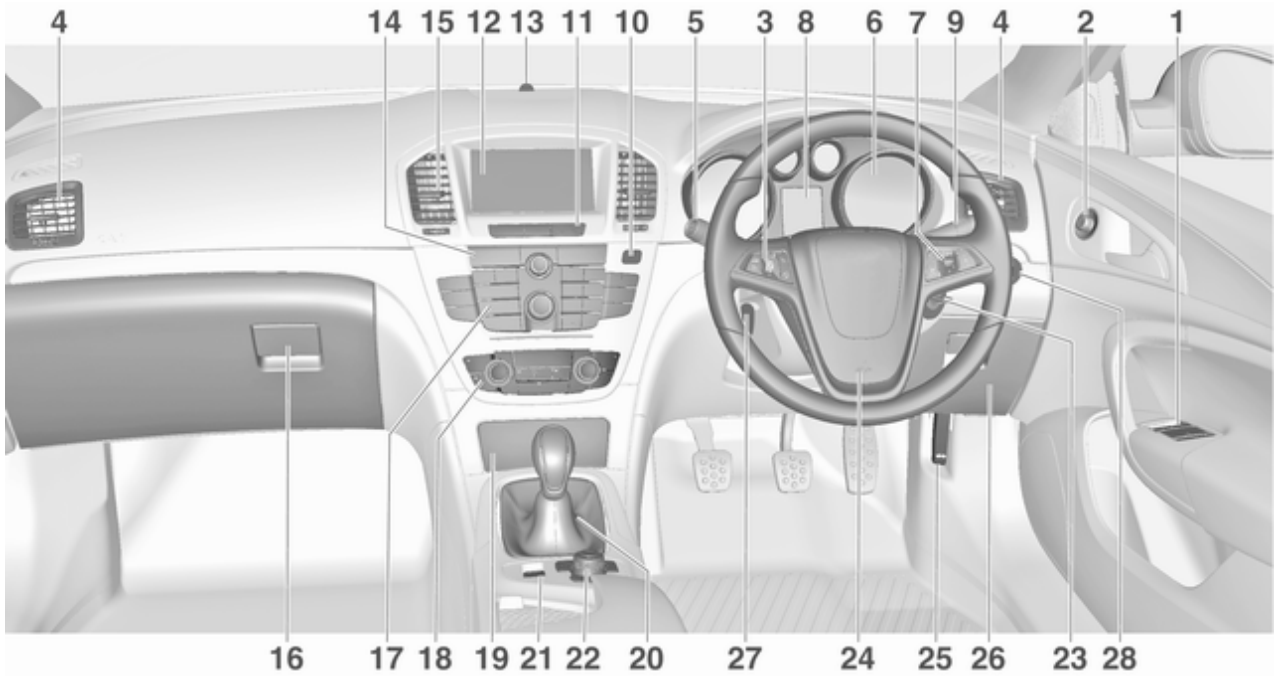
4
14
15
12
13
11
10
5
3
8
6
7
9
4
2
1
16
17
18
19
21
22
20
27
24
25
26
23
28

## Exterior lighting

Turn light switch

AUTO = automatic light control: Exterior lighting is switched on and off automatically

⏻ = activation or deactivation of the automatic light control

≡D = sidelights

≡D = low beam

Press light switch

≡D = front fog lights

D≡ = rear fog light

Lighting ➪ 118.

## Headlight flash, high beam and low beam

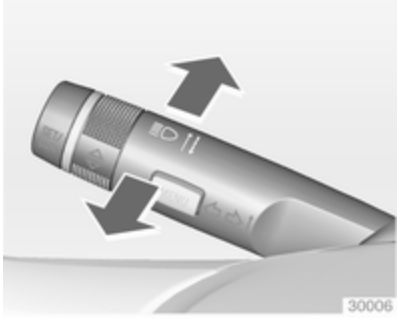


headlight flash = pull lever
high beam = push lever
low beam = push or pull lever

Automatic light control ➪ 119, High beam ➪ 119, Headlight flash ➪ 119.

## Turn and lane-change signals

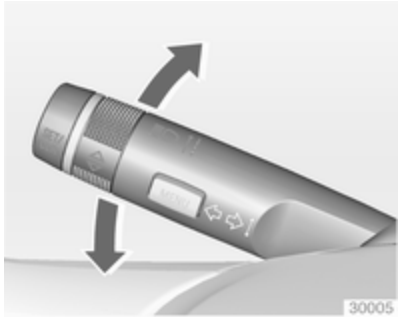


lever up = right turn signal
lever down = left turn signal

Turn and lane-change signals ⇨ 123, Parking lights ⇨ 124.

## Hazard warning flashers

Operated with the button.

Hazard warning flashers ⇨ 123.

## Horn

Press .

# Washer and wiper systems

## Windscreen wiper

2 = fast
1 = slow
⊘ = interval wiping or automatic wiping with rain sensor
O = off

For a single wipe when the windscreen wiper is off, press the lever down.

Windscreen wiper ⇨ 81, Wiper blade replacement ⇨ 198.

## Windscreen and headlight washer

Pull lever.

Windscreen and headlight washer system ⇨ 81, Washer fluid ⇨ 196.

## Rear window wiper

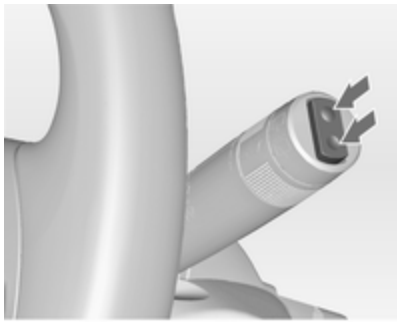

Press the rocker switch to activate the rear window wiper:

| | | |
|---|---|---|
| upper switch | = | continuous operation |
| lower switch | = | intermittent operation |
| middle position | = | off |

## Rear window washer

Push lever.

Washer fluid is sprayed on the rear window and the wiper wipes for a few strokes.

Rear window wiper/washer ⇨ 83.

# Climate control

## Heated rear window, heated exterior mirrors

Heating is operated by pressing the button.

Heated rear window ⇨ 38.

## Demisting and defrosting the windows

Press button .

Set temperature control to warmest level.

Cooling on.

Heated rear window on.

Climate control system ⇨ 129.

# Transmission

## Manual transmission

Reverse: with the vehicle stationary, depress clutch pedal, press the release button on the selector lever and engage the gear.

If the gear does not engage, set the lever to neutral, release the clutch pedal and depress again; then repeat gear selection.

Manual transmission ⇨ 149.

## Automatic transmission

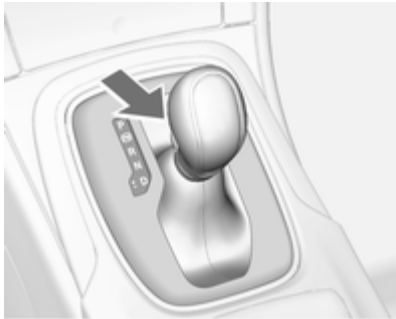

**P** = park
**R** = reverse
**N** = neutral
**D** = drive

Manual mode: move selector lever from **D** to the left.

**+** = higher gear
**–** = lower gear

The selector lever can only be moved out of **P** when the ignition is on and the brake pedal is applied. To engage **P** or **R**, press the release button.

Automatic transmission ⇨ 145.

# Starting off

## Check before starting off

- Tyre pressure and condition ⇨ 216, ⇨ 267.
- Engine oil level and fluid levels ⇨ 193.
- All windows, mirrors, exterior lighting and number plates are free from dirt, snow and ice and are operational.
- Proper position of mirrors, seats, and seat belts ⇨ 33, ⇨ 44, ⇨ 51.
- Brake function at low speed, particularly if the brakes are wet.

## Starting the engine

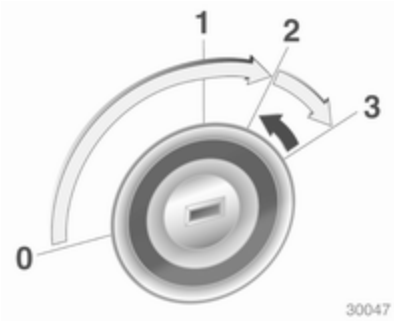


- Turn key to position **1**
- move the steering wheel slightly to release the steering wheel lock
- operate clutch and brake
- automatic transmission in **P** or **N**
- do not operate accelerator pedal
- diesel engines: turn the key to position **2** for preheating and wait until control indicator extinguishes
- turn key to position **3** and release

Starting the engine ⇨ 139.

## Stop-start system

If the vehicle is at a low speed or at a standstill and certain conditions are fulfilled, activate an Autostop as follows:

- Depress the clutch pedal
- set the lever in neutral
- release the clutch pedal

An Autostop is indicated by the needle at the **AUTOSTOP** position in the tachometer.

To restart the engine, depress the clutch pedal again.

Stop-start system ⇨ 140.

# Parking

- Always apply the parking brake. Activate the manual parking brake without pushing the release button. Apply as firmly as possible on a downhill slope or uphill slope. Depress foot brake at the same time to reduce operating force.

  For vehicles with electrical parking brake, pull switch Ⓟ for approx. one second.
- Switch off the engine. Turn the ignition key to position 0 and remove it. Turn the steering wheel until the steering wheel lock is felt to engage.

  For vehicles with automatic transmission, the key can only be removed when the selector lever is in position **P**.
- If the vehicle is on a level surface or uphill slope, engage first gear or set the selector lever to position **P** before switching off the ignition. On an uphill slope, turn the front wheels away from the kerb.

If the vehicle is on a downhill slope, engage reverse gear or set the selector lever to position **P** before switching off the ignition. Turn the front wheels towards the kerb.

- Lock the vehicle with button 🔒 on the radio remote control.

  Activate the anti-theft alarm system ⇨ 31.
- Do not park the vehicle on an easily ignitable surface. The high temperature of the exhaust system could ignite the surface.
- Close the windows and the sunroof.
- The engine cooling fans may run after the engine has been switched off ⇨ 192.
- After running at high engine speeds or with high engine loads, operate the engine briefly at a low load or run in neutral for approx.
  30 seconds before switching off, in order to protect the turbocharger.

Keys, locks ⇨ 21, Laying the vehicle up for a long period of time ⇨ 191.

# Keys, doors and windows

Keys, locks ..... 21
Doors ..... 26
Vehicle security ..... 31
Exterior mirrors ..... 33
Interior mirrors ..... 35
Windows ..... 36
Roof ..... 39

# Keys, locks

## Keys

### Replacement keys

The key number is specified in the Car Pass or on a detachable tag.

The key number must be quoted when ordering replacement keys as it is a component of the immobiliser system.

Locks ⇨ 233.

### Key with foldaway key section

Press button to extend. To fold the key, first press the button.

## Car Pass

The Car Pass contains security related vehicle data and should therefore be kept in a safe place.

When the vehicle is taken to a workshop, this vehicle data is needed in order to perform certain operations.

## Radio remote control

Used to operate:

- Central locking system
- Anti-theft locking system
- Anti-theft alarm system
- Load compartment tailgate
- Power windows
- Sunroof

The radio remote control has a range of up to 50 metres. It can be restricted by external influences. The hazard warning flashers confirm operation.

Handle with care, protect from moisture and high temperatures and avoid unnecessary operation.

### Fault

If the central locking system cannot be operated with the radio remote control, it may be due to the following:

- Range exceeded
- Battery voltage too low
- Frequent, repeated operation of the radio remote control while not in range, which will require re-synchronisation
- Overload of the central locking system by operating at frequent intervals, the power supply is interrupted for a short time
- Interference from higher-power radio waves from other sources

Unlocking ⇨ 23.

### Basic settings

Some settings can be changed in the menu **Settings** in the Info-Display. Vehicle personalisation ⇨ 112.

### Radio remote control battery replacement

Replace the battery as soon as the range reduces.

Batteries do not belong in household waste. They must be disposed of at an appropriate recycling collection point.

#### Key with foldaway key section

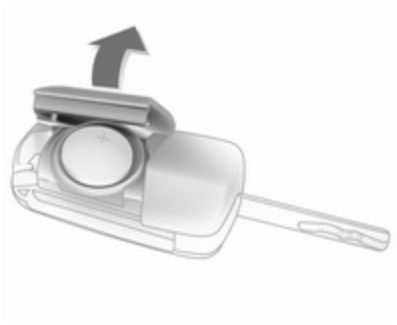

Extend the key and open the unit. Replace the battery (battery type CR 2032), paying attention to the installation position. Close the unit and synchronise.

## Memorised settings

Whenever the key is removed from the ignition switch, the following settings are automatically memorised by the key:

- Electronic climate control
- Lighting

- Infotainment system
- Central locking system
- Sport mode settings
- Comfort settings

The saved settings are automatically used the next time the memorised key is inserted into the ignition switch and turned to position **1** ⇨ 139.

A precondition is that **Personalization by driver** is activated in the personal settings of the Graphic-Info-Display. This must be set for each key used. On vehicles equipped with Colour-Info-Display, the personalisation is permanently activated.

Also memorised are the adjustments of the driver's seat and exterior mirrors, independent of the memory positions ⇨ 47.

Power seat automatically moves into the saved position when unlocking and opening the driver's door with the memorised key and **Personalization by remote control** in the Colour-Info-Display is activated.

Vehicle personalisation ⇨ 112.

# Central locking system

Unlocks and locks doors, load compartment and fuel filler flap.

A pull on an interior door handle unlocks the respective door. Pulling the handle once more opens the door.

**Note**
In the event of an accident in which airbags or belt pretensioners are deployed, the vehicle is automatically unlocked.

## Unlocking

Press button 🔓.

Two settings are selectable:

- To unlock only the driver's door, load compartment and fuel filler flap, press button 🔓 once. To unlock all doors, press button 🔓 twice

  or

- press button 🔓 once to unlock all doors, load compartment and fuel filler flap

The setting can be changed in the menu **Settings** in the Info-Display. Vehicle personalisation ⇨ 112.

The setting can be saved for the key being used. Memorised settings ⇨ 22.

## Locking

Close doors, load compartment and fuel filler flap.

Press button 🔒.

If the driver's door is not closed properly, the central locking system will not work. Vehicle personalisation ⇨ 112.

## Unlocking and opening the tailgate

Press button 🔓 when the ignition is off. The tailgate is released to be unlocked and opened by pushing the touchpad switch under the tailgate moulding.

### 4-door Saloon, Sports Tourer with power tailgate

Press button 🚗 when the ignition is off until tailgate opens automatically. All other doors remain locked.

Power tailgate ⇨ 26.

## Central locking buttons

Locks or unlocks all doors, the load compartment and fuel filler flap from the passenger compartment.

Press the button to lock.
Press the button to unlock.

## Fault in radio remote control system

### Unlocking

Manually unlock the driver's door by turning the key in the lock. Switch on the ignition and press the central locking button to unlock all doors, load compartment and fuel filler flap. By switching on the ignition, the anti-theft locking system is deactivated.

### Locking

Manually lock the driver's door by turning the key in the lock.

## Fault in central locking system

### Unlocking

Manually unlock the driver's door by turning the key in the lock. The other doors can be opened by pulling the interior handle twice. The load compartment and fuel filler flap cannot be opened. To deactivate the anti-theft locking system, switch on the ignition ⇨ 31.

### Locking

Push inside locking knob of all doors except driver's door. Then close the driver's door and lock it from the outside with the key. The fuel filler flap and tailgate cannot be locked.

# Automatic locking

## Automatic locking after driving off

This security feature can be configured to automatically lock all doors, load compartment and fuel filler flap after driving off and exceeding a certain speed.

When at a standstill after driving, the vehicle will be unlocked automatically as soon as the key is removed from the ignition switch.

Activation or deactivation of automatic locking can be set in the menu **Settings** in the Info-Display. Vehicle personalisation ⇨ 112.

The setting can be saved for the key being used ⇨ 22.

### Automatic relock after unlocking

This feature can be configured to automatically lock all doors, load compartment and fuel filler flap a short time after unlocking with the remote control, provided no door has been opened.

Activation or deactivation of automatic relock can be set in the menu **Settings** in the Info-Display. Vehicle personalisation ⇨ 112.

The setting can be saved for the key being used ⇨ 22.

## Child locks

**⚠ Warning**

Use the child locks whenever children are occupying the rear seats.

Using a key or suitable screwdriver, turn the child lock in the rear door to the horizontal position. The door cannot be opened from the inside. For deactivation turn the child lock to the vertical position.

# Doors

## Load compartment

### Tailgate

**Opening**

**5-door Hatchback, Sports Tourer**

After unlocking, pull the button under the tailgate moulding and open the tailgate manually.

**4-door Saloon**

Press button on radio remote control until the tailgate is opened automatically, or pull the button under the tailgate moulding after unlocking.

Central locking system ⇨ 23.

### Closing

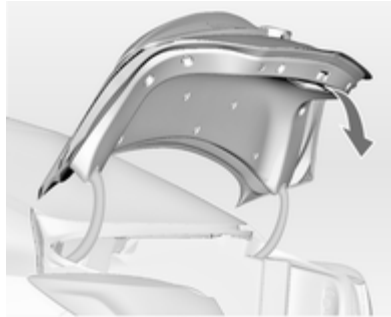

Use the interior handle.

Do not pull the button under the moulding whilst closing as this will unlock the tailgate again.

Central locking system ⇨ 23.

## Power tailgate

**⚠Warning**

Take care when operating the power tailgate. Risk of injury, particularly to children.

Keep a close watch on the movable tailgate when operating. Ensure that nothing becomes trapped during operating and no one is standing within the moving area.

The power tailgate is operated by:

- Radio remote control button
- Switch in the door panel of the driver's door
- Touchpad switch and button in the tailgate.

On vehicles with automatic transmission, the tailgate can only be operated when the vehicle is stationary with parking brake applied and automatic transmission in **P**.

The tail lights flash and a chime sounds when the power tailgate is operating.

**Note**
Operating the power tailgate does not operate the central locking system. To open the tailgate with the remote control, it is not necessary to unlock the vehicle. Unlock the

vehicle first, when operating with the touchpad switch or the switch in the driver's door. Lock the vehicle after closing.

Central locking system ⇨ 23.

### Operation with radio remote control

Press and hold button until the tailgate starts to open or close.

### Operation with the switch in the driver's door

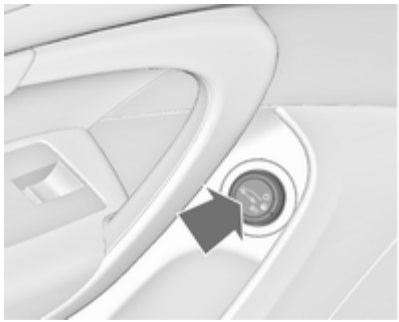

Press and hold button until the tailgate starts to open or close.

### Operation with switches in the tailgate

To open the tailgate, push and hold the touchpad switch under the tailgate moulding until the tailgate starts to move.

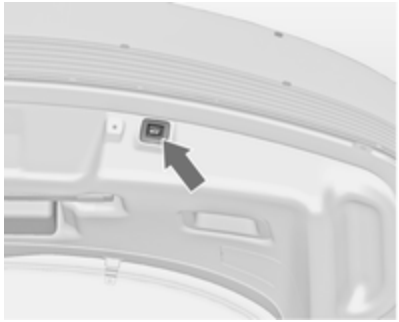

To close, press the button in the open tailgate until it starts to move.

### Stop or change direction of movement

Pressing button or or the touchpad switch whilst the tailgate is moving will stop the tailgate in the current position. Pressing button or again will reverse the direction of movement.

### Operation modes

The power tailgate has three modes of operation, which are controlled by the switch in the driver's door. To change the mode turn the switch:

- Normal mode o: power tailgate opens to full height
- Intermediate mode ◒: power tailgate opens to a reduced height that can be adjusted
- Mode **Off**: tailgate can only be operated manually.

### Adjust reduced opening height in intermediate mode

1. Turn operation mode switch to o or ◒
2. Open power tailgate with any operation switch
3. Stop movement at the desired height by pressing any operation switch. If required, manually move the stopped tailgate to the desired position
4. Press and hold the button on the inside of the open tailgate for 3 seconds.

A chime sound indicates the new setting.

When turning the adjuster wheel in the driver's door to intermediate mode ◒, the power tailgate will stop opening at the newly set position.

The tailgate can only be held open if a minimum height is exceeded (minimum opening angle from 30°). The opening height cannot be programmed below that height.

**Safety function**

If the power tailgate encounters an obstacle during opening or closing, the direction of movement will automatically be reversed slightly. Multiple obstacles in one power cycle will deactivate the function. In this case close or open the tailgate manually.

The power tailgate has pinch sensors on the side edges. If the sensors detect obstacles between tailgate and chassis, the tailgate will open, until it is activated again or closed manually.

The safety function is indicated by a warning chime.

Remove all obstacles before resuming normal power operation.

If the vehicle is equipped with factory-fitted towing equipment and a trailer is electrically connected, the power tailgate can only be opened with the touchpad switch or closed with button in the open tailgate. Ensure that there are no obstacles in the moving area.

## General hints for operating tailgate

**⚠ Warning**

Do not drive with the tailgate open or ajar, e.g. when transporting bulky objects, since toxic exhaust gases, which can not be seen or smelled, could enter the vehicle. This can cause unconsciousness and even death.

**Caution**

Before opening the tailgate, check overhead obstructions, such as a garage door, to avoid damage to the tailgate. Always check the moving area above and behind the tailgate.

**Note**

Power tailgate: If the hydraulic lifters of the open tailgate lose pressure, the tail lights will flash and a chime will sound. The tailgate will remain open for a while and then close slowly. Seek the assistance of a workshop.

**Note**

The operation of the power tailgate is disabled under low battery condition. In this case the tailgate can be operated manually.

**Note**

With the power tailgate disabled and all doors unlocked, the tailgate can be manually operated. In this case, manually closing the tailgate requires significantly greater force.

**Note**

The installation of certain heavy accessories onto the tailgate may affect its ability to remain open.

# Vehicle security

## Anti-theft locking system

**⚠ Warning**

Do not use the system if there are people in the vehicle! The doors cannot be unlocked from the inside.

The system deadlocks all the doors. All doors must be closed or the system cannot be activated.

If the ignition was on, the driver's door must be opened and closed once so that the vehicle can be secured.

Unlocking the vehicle disables the mechanical anti-theft locking system. This is not possible with the central locking button.

### Activating

Press 🔒 on the radio remote control twice within 5 seconds.

## Anti-theft alarm system

The anti-theft alarm system incorporates and is operated in conjunction with the anti-theft locking system.

It monitors:

- Doors, tailgate, bonnet
- Passenger compartment including adjoining load compartment
- Vehicle inclination, e.g. if it is raised
- Ignition

### Activation

- Self-activated 30 seconds after locking the vehicle by pressing 🔒 on the radio remote control (initialisation of the system)
- Directly by pressing 🔒 on the radio remote control once more after locking

**Note**

Changes to the vehicle interior such as the use of seat covers, and open windows or sunroof, could impair the function of passenger compartment monitoring.

## Activation without monitoring of passenger compartment and vehicle inclination

Switch off the monitoring of passenger compartment and vehicle inclination when animals are being left in the vehicle, because of high volume ultrasonic signals or movements triggering the alarm. Also switch off when the vehicle is on a ferry or train.

1. Close tailgate, bonnet, windows and sunroof.
2. Press button . LED in the button illuminates for a maximum of 10 minutes.
3. Close doors.
4. Activate the anti-theft alarm system.

Status message is displayed in the Driver Information Centre.

## Status LED

Status LED is integrated in the sensor on top of the instrument panel.

Status during the first 30 seconds of anti-theft alarm system activation:

| | | |
|---|---|---|
| LED illuminates | = | test, arming delay. |
| LED flashes quickly | = | doors, tailgate or bonnet not completely closed, or system fault. |

Status after system is armed:

| | | |
|---|---|---|
| LED flashes slowly | = | system is armed. |

Seek the assistance of a workshop in the event of faults.

## Deactivation

Unlocking the vehicle with the radio remote control deactivates the anti-theft alarm system. The system is not deactivated when unlocking the driver's door with the key.

## Alarm

When triggered, the alarm sounds via a separate battery-backed power sounder, and the hazard warning

lights flash simultaneously. The number and duration of alarm signals are stipulated by legislation.

The anti-theft alarm system can be deactivated only by pressing button 🔓 or by switching on the ignition.

A triggered alarm, which has not been interrupted by the driver, will be indicated by the hazard warning lights. They will flash quickly three times when the vehicle is unlocked next time with the radio remote control. Additionally a warning message or a warning code is displayed in the Driver Information Centre after switching on the ignition.

Vehicle messages ⇨ 106.

## Immobiliser

The system is part of the ignition switch and checks whether the vehicle is allowed to be started with the key being used.

The immobiliser is activated automatically after the key has been removed from the ignition switch.

If the control indicator 🔒 flashes when the ignition is on, there is a fault in the system; the engine cannot be started. Switch off the ignition and repeat the start attempt.

If the control indicator continues flashing, attempt to start the engine using the spare key and seek the assistance of a workshop.

**Note**
The immobiliser does not lock the doors. You should always lock the vehicle after leaving it and switch on the anti-theft alarm system ⇨ 23, ⇨ 31.

Control indicator 🔒 ⇨ 97.

# Exterior mirrors

## Convex shape

The convex exterior mirror contains an aspherical area and reduces blind spots. The shape of the mirror makes objects appear smaller, which will affect the ability to estimate distances.

## Electric adjustment

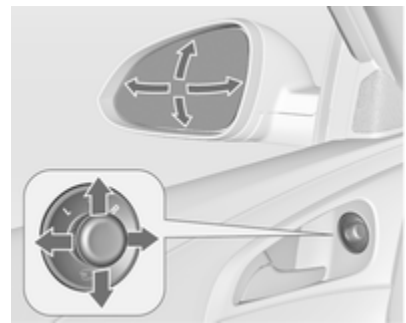

Select the relevant exterior mirror by turning the control to left **(L)** or right **(R)**. Then swivel the control to adjust the mirror.

In position **0** no mirror is selected.

## Folding

For pedestrian safety, the exterior mirrors will swing out of their normal mounting position if they are struck with sufficient force. Reposition the mirror by applying slight pressure to the mirror housing.

## Electric folding

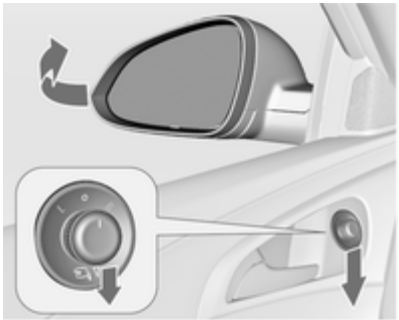

Turn control to **O**, then push the control down. Both exterior mirrors will fold.

Push the control down again - both exterior mirrors return to their original position.

If an electrically folded mirror is manually extended, pressing down the control will only electrically extend the other mirror.

## Folding mirrors from outside

Press 🔒 briefly to fold in mirrors.

Press 🔓 briefly to fold out mirrors.

If the mirrors were folded in using the control in the driver's door, they are not folded out by pressing 🔓.

Activation or deactivation of this function can be changed in the menu **Settings** in the Info-Display. Vehicle personalisation ⇨ 112.

The settings are automatically stored for the key being used ⇨ 22.

Power windows ⇨ 36.

## Heated

Operated by pressing the button.

Heating works with the engine running and is switched off automatically after a short time.

## Parking assist

For mirrors with position memory, the exterior mirror on the passenger side is automatically aimed at the rear tyres as a parking aid when reverse gear is selected, except during trailer operation.

Position memory ⇨ 47.

Activation or deactivation of this function can be changed in the menu **Settings** in the Info-Display. Vehicle personalisation ⇨ 112.

# Interior mirrors

## Manual anti-dazzle

To reduce dazzle, adjust the lever on the underside of the mirror housing.

## Automatic anti-dazzle

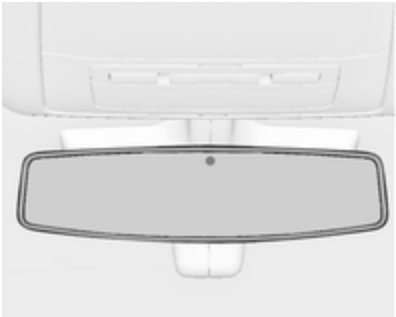

Dazzle from following vehicles at night is automatically reduced.

# Windows

## Windscreen

### Heat-reflecting windscreen

The heat-reflecting windscreen has a coating which reflects solar radiation. Also data signals, e.g. from toll stations, might be reflected.

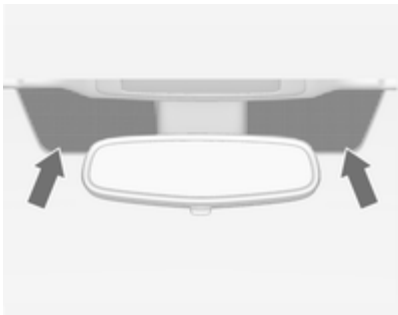

The marked areas on the windscreen are not covered with the coating. Devices for electronic data recording and fee payment must be attached in these areas. Otherwise data recording malfunctions may occur.

### Windscreen stickers

Do not attach stickers such as toll road stickers or similar on the windscreen in the area of the interior mirror. Otherwise the detection zone of the sensor and the view area of the camera in the mirror housing could be restricted.

## Manual windows

The door windows can be opened or closed with the window winders.

## Power windows

**⚠ Warning**

Take care when operating the power windows. Risk of injury, particularly to children.

If there are children on the rear seats, switch on the child safety system for the power windows.

Keep a close watch on the windows when closing them. Ensure that nothing becomes trapped in them as they move.

Switch on ignition to operate power windows.

Retained power off ⇨ 139.

Operate the switch for the respective window by pushing to open or pulling to close.

Pushing or pulling gently to the first detent: window moves up or down as long as the switch is operated.

Pushing or pulling firmly to the second detent and then releasing: window moves up or down automatically with safety function enabled. To stop movement, operate the switch once more in the same direction.

Power windows can work until the driver's door is opened or at the latest for 10 minutes after the ignition is switched off.

## Safety function

If the window glass encounters resistance above the middle of the window during automatic closing, it is immediately stopped and opened again.

## Override safety function

In the event of closing difficulties due to frost or the like, switch on the ignition, then pull the switch to the first detent and hold. The window moves up without safety function enabled. To stop movement, release the switch.

## Child safety system for rear windows

Press switch ⊠ to deactivate rear door power windows; the LED illuminates. To activate, press ⊠ again.

## Operating windows from outside

The windows can be operated remotely from outside the vehicle.

Press and hold button to open windows.

Press and hold button to close windows.

Release button to stop window movement.

If the windows are fully opened or closed, the hazard warning lights will flash two times.

Folding ⇨ 34.

### Overload

If the windows are repeatedly operated within short intervals, the window operation is disabled for some time.

### Initialising the power windows

If the windows cannot be closed automatically (e.g. after disconnecting the vehicle battery), a warning message or a warning code is displayed in the Driver Information Centre.

Vehicle messages ⇨ 106.

Activate the window electronics as follows:

1. Close doors.
2. Switch on ignition.
3. Pull switch until the window is closed and keep pulling for additional 2 seconds.
4. Repeat for each window.

## Heated rear window

Operated by pressing the button.

Heating works with the engine running and is switched off automatically after a short time.

Depending on the engine type, the heated rear window comes on automatically when the diesel particle filter is being cleaned.

## Sun visors

The sun visors can be folded down or swivelled to the side to prevent dazzling.

If the sun visors have integral mirrors, the mirror covers should be closed when driving.

## Roller blinds

To reduce sunlight at the rear seats, pull the blind upwards using the grip and engage it at the top of the door frame.

# Roof

## Sunroof

**⚠Warning**

Take care when operating the sunroof. Risk of injury, particularly to children.

Keep a close watch on the movable parts when operating them. Ensure that nothing becomes trapped in them as they move.

### Sunroof, 5-door Hatchback/4-door Saloon

**Open or close**

Press ⌓ or ⌓ gently to the first detent: sunroof is opened or closed with safety function enabled as long as the switch is operated.

Press ⌓ or ⌓ firmly to the second detent and then release: the sunroof is opened or closed automatically with safety function enabled. To stop movement, operate the switch once more.

### Raise or close

Press ⌓ or ⌓: sunroof is raised or closed automatically with safety function enabled.

If the sunroof is raised, it can be opened in one step by pressing ⌓.

### Sunblind

The sunblind is manually operated.

Close or open the sunblind by sliding. When the sunroof is open, the sunblind is always open.

## Sunroof, Sports Tourer

### Open

Press ⌓ gently to the first detent: sunroof is opened to the spoiler position.

Press ⌓ firmly to the second detent and then release: the sunroof is opened automatically with safety function enabled. To stop movement, operate the switch once more.

### Close

Press ⌓ gently to the first detent: sunroof is closed from fully open or spoiler position with safety function enabled as long as the switch is operated.

Press ⌓ firmly to the second detent and then release: the sunroof is completely closed automatically with safety function enabled. To stop movement, operate the switch once more.

### Sunblind

The sunblind is power operated.

Close or open the sunblind by pressing switch ⊟ or ⊞.

## General hints

### Function standby

Switch on ignition to operate the sunroof.

### Safety function

If the sunroof or sunblind encounters resistance during automatic closing, it is immediately stopped and opened again.

### Override safety function

In the event of closing difficulties due to frost or the like, hold the switch pressed to the second detent. The sunroof closes without safety function. To stop movement, release the switch.

### Closing sunroof from outside

The sunroof can be closed remotely from outside the vehicle.

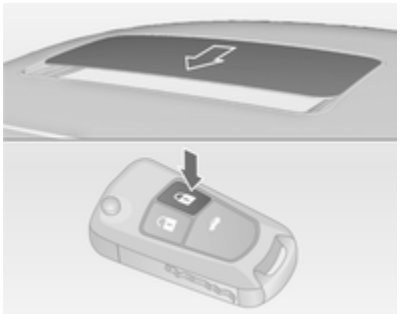

Press and hold button to close the sunroof.

Release the button to stop the movement.

### Initialising after a power failure

After a power failure, it may only be possible to operate the sunroof to a limited extent. Have the system initialised by your workshop.

# Seats, restraints

Head restraints ..... 42
Front seats ..... 44
Rear seats ..... 50
Seat belts ..... 50
Airbag system ..... 53
Child restraints ..... 57

# Head restraints

## Position

**⚠ Warning**

Only drive with the head restraint set to the proper position.

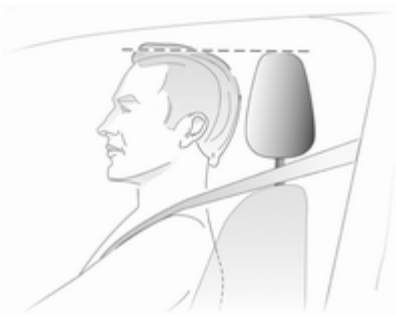

The upper edge of the head restraint should be at upper head level. If this is not possible for extremely tall people, set to highest position, and set to lowest position for small people.

## Adjustment

### Head restraints on front seats

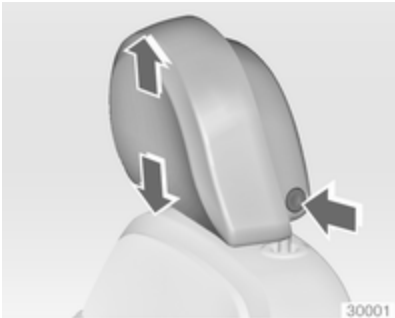


**Height adjustment**
Press release button, adjust height, engage.

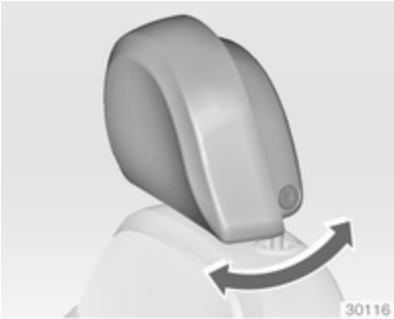


### Inclination adjustment

Move the bottom edge of the head restraint forward in required position. The headrest can be moved rearward after reaching of very forward position.

### Head restraints on rear seats

### Height adjustment

Pull the head restraint upwards or press the catch to release and push the head restraint downwards.

## Active head restraints

In the event of a rear-end impact, the front parts of the active head restraints are moved slightly forwards. Thus the head is supported so that the risk of whiplash injury is reduced.

### Note

Approved accessories may only be attached if the seat is not in use.

# Front seats

## Seat position

**⚠ Warning**

Only drive with the seat correctly adjusted.

- Sit with buttocks as far back against the backrest as possible. Adjust the distance between the seat and the pedals so that legs are slightly angled when pressing the pedals. Slide the front passenger seat as far back as possible.
- Sit with shoulders as far back against the backrest as possible. Set the backrest rake so that it is possible to easily reach the steering wheel with arms slightly bent. Maintain contact between shoulders and the backrest when turning the steering wheel. Do not angle the backrest too far back. We recommend a maximum rake of approx. 25°.
- Adjust the steering wheel ⇨ 79.
- Set seat height high enough to have a clear field of vision on all sides and of all display instruments. There should be at least one hand of clearance between head and the roof frame. Your thighs should rest lightly on the seat without pressing into it.
- Adjust the head restraint ⇨ 42.
- Adjust the height of the seat belt ⇨ 51.
- Adjust the thigh support so that there is a space approx. two fingers wide between the edge of the seat and the hollow of the knee.
- Adjust the lumbar support so that it supports the natural shape of the spine.

## Seat adjustment

**⚠ Danger**

Do not sit nearer than 25 cm from the steering wheel, to permit safe airbag deployment.

**⚠ Warning**

Never adjust seats while driving as they could move uncontrollably.

## Seat positioning

Pull handle, slide seat, release handle.

## Seat backrests

Pull lever, adjust inclination and release lever. Allow the backrest to engage audibly.

## Seat height

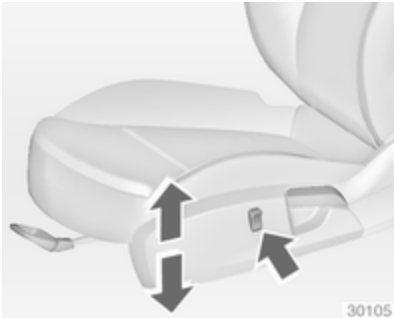


Press switch

top = seat higher
bottom = seat lower

## Seat inclination

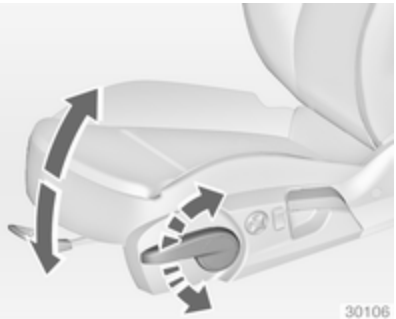


Lever pumping motion

up = front end higher
down = front end lower

## Lumbar support

Adjust lumbar support using the four-way switch to suit personal requirements.

Moving support up and down: push switch up or down.

Increasing and decreasing support: push switch forwards or backwards.

## Adjustable thigh support

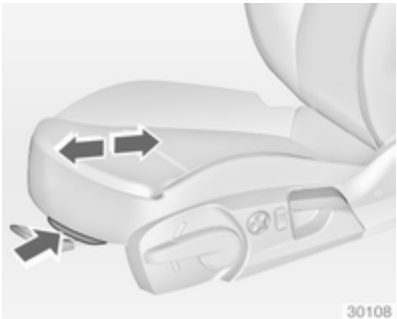


Pull the lever and slide the thigh support.

## Power seat adjustment

**⚠Warning**

Care must be taken when operating the power seats. There is a risk of injury, particularly for children. Articles could become trapped.

Keep a close watch on the seats when adjusting them. Vehicle passengers should be informed accordingly.

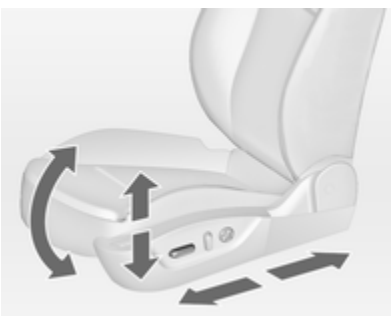

### Seat positioning

Move front of switch forwards/ backwards.

### Seat height

Move switch upwards/downwards.

### Seat inclination

Move front of switch upwards/ downwards.

### Seat backrests

Turn switch forwards/backwards.

### Memory function for power seat adjustment and exterior mirrors

Two different driver's seat and exterior mirror settings can be stored.

Memorised settings ⇨ 22, Vehicle personalisation ⇨ 112.

### Storing memory positions by buttons 1 and 2

- Adjust driver's seat and then adjust exterior mirrors to desired positions.
- Press and hold button **MEM** and button **1** at the same time until a beep sounds.
- Repat the steps for a second driver using button **2**.

### Recall of memory positions

Keep position button **1** or **2** pressed until the stored seat and exterior mirror positions have been reached. Releasing the button during moving stops the recall.

### Storing positions by remote control

Actual driver's seat and exterior mirror positions are automatically stored by the radio remote control key each time the ignition is switched off. These stored positions are independent of the memory positions stored by the buttons **1** or **2**, see above.

The stored positions are automatically recalled by unlocking and opening the driver's door with the memorised radio remote key. If the door is already open, press button 🔓 on remote control to activate the recall.

To stop recall movement, press one of the memory-, power mirror- or power seat controls.

Activation or deactivation of this function can be changed in the menu **Settings** in the Info-Display. Vehicle personalisation ⇨ 112.

### Easy exit function

For a convenient exit out of the vehicle, the power driver seat moves rearwards when vehicle is stationary. To activate, switch off ignition, remove key from the ignition switch and open the driver's door. If the door is already open, switch off ignition to activate the recall.

To stop recall movement, press one of the memory- or power seat controls.

Activation or deactivation of this function can be changed in the menu **Settings** in the Info-Display. Vehicle personalisation ⇨ 112.

### Safety function

If the driver's seat encounters resistance during movement, the recall may stop. After removing the obstruction, operate and hold the appropriate power seat position button for the memory item manually for two seconds. Try recalling the memory position again. If the recall does not operate consult a workshop.

### Overload

If the seat setting is electrically overloaded, the power supply is automatically cut-off for a short time.

**Note**

After an accident in which airbags have been deployed, the memorised settings for each position button will be deactivated.

## Armrest

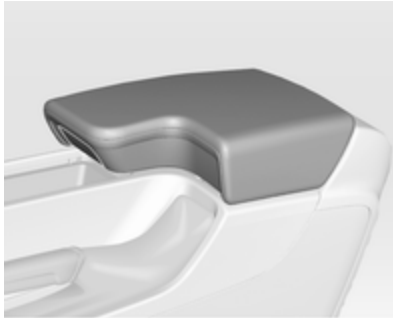

Push button and fold armrest upwards. Under the armrest there is a storage compartment.

Auxiliary devices, see Infotainment system manual.

## Heating

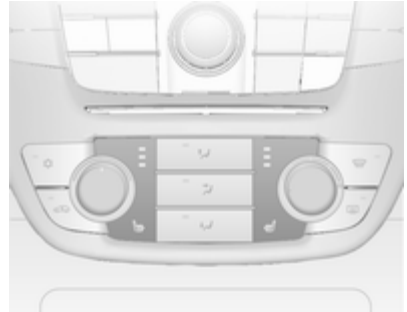

Adjust heating to the desired setting by pressing the button for the respective seat one or more times. The control indicator in the button or in the display indicates the setting.

Prolonged use of the highest setting for people with sensitive skin is not recommended.

Seat heating is operational when engine is running and during an Autostop.

Stop-start system ⇨ 140.

## Ventilating

Adjust ventilation to the desired setting by pressing the button for the respective seat one or more times.

The control indicator in the button or in the display indicates the setting.

Ventilated seats are operational when engine is running and during an Autostop.

Stop-start system ⇨ 140.

# Rear seats

## Armrest

Fold armrest down. The armrest contains cupholders and a storage box.

# Seat belts

The seat belts are locked during heavy acceleration or deceleration of the vehicle holding the occupants in the sitting position. Thereby the risk of injury is considerably reduced.

**⚠ Warning**

Fasten seat belt before each trip.

In the event of an accident, people not wearing seat belts endanger their fellow occupants and themselves.

Seat belts are designed to be used by only one person at a time. Child restraint system ⇨ 57.

Periodically check all parts of the belt system for damage, pollution and proper functionality.

Have damaged components replaced. After an accident, have the belts and triggered belt pretensioners replaced by a workshop.

**Note**
Make sure that the belts are not damaged by shoes or sharp-edged objects or trapped. Prevent dirt from getting into the belt retractors.

## Seat belt reminder

Each seat is equipped with a seat belt reminder, indicated for front seats by control indicators and ², or for rear seats by the symbol in the Driver Information Centre ⇨ 92.

## Belt force limiters

Stress on the body is reduced by the gradual release of the belt during a collision.

### Belt pretensioners

In the event of a head-on or rear-end collision of a certain severity, the front seat belts are tightened.

**⚠ Warning**

Incorrect handling (e.g. removal or fitting of belts) can trigger the belt pretensioners.

Deployment of the belt pretensioners is indicated by continuous illumination of control indicator ⇨ 92.

Triggered belt pretensioners must be replaced by a workshop. Belt pretensioners can only be triggered once.

**Note**

Do not affix or install accessories or other objects that may interfere with the operation of the belt pretensioners. Do not make any modifications to belt pretensioner components as this will invalidate the vehicle type approval.

## Three-point seat belt

### Fastening

Withdraw the belt from the retractor, guide it untwisted across the body and insert the latch plate into the buckle. Tighten the lap belt regularly whilst driving by pulling the shoulder belt.

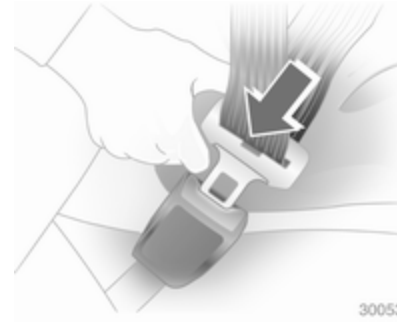


Loose or bulky clothing prevents the belt from fitting snugly. Do not place objects such as handbags or mobile phones between the belt and your body.

**⚠ Warning**

The belt must not rest against hard or fragile objects in the pockets of your clothing.

Seat belt reminder, ⇨ 92.

### Insignia OPC

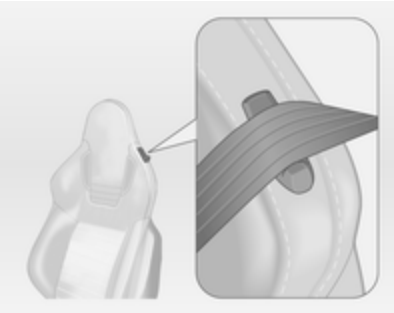

Feed seat belt through belt mount on backrest when fastening seat belt.

## Height adjustment

1. Pull belt out slightly.
2. Press button.
3. Adjust height and engage.

Adjust the height so that the belt lies across the shoulder. It must not lie across the throat or upper arm.

Do not adjust while driving.

### Removing

To release belt, press red button on belt buckle.

**Insignia OPC**
Feed seat belt through belt mount on backrest after releasing.

## Seat belts on the rear seats

The seat belt for the rear centre seat can only be withdrawn from the retractor if the backrest is in the rear position.

### Using the seat belt while pregnant

**⚠Warning**

The lap belt must be positioned as low as possible across the pelvis to prevent pressure on the abdomen.

# Airbag system

The airbag system consists of a number of individual systems depending on the scope of equipment.

When triggered the airbags inflate within milliseconds. They also deflate so quickly that it is often unnoticeable during the collision.

**⚠Warning**

If handled improperly the airbag systems can be triggered in an explosive manner.

**Note**
The airbag systems and belt pretensioner control electronics are located in the centre console area. Do not put any magnetic objects in this area.

Do not stick anything on the airbag covers and do not cover them with other materials.

Each airbag is triggered only once. Have deployed airbags replaced by a workshop. Furthermore, it might be necessary to have the steering wheel, the instrument panel, parts of the panelling, the door seals, handles and the seats replaced.

Do not make any modifications to the airbag system as this will invalidate the vehicle type approval.

When the airbags inflate, escaping hot gases may cause burns.

Control indicator for airbag systems ⇨ 92.

## Front airbag system

The front airbag system consists of one airbag in the steering wheel and one in the instrument panel on the front passenger side. These can be identified by the word **AIRBAG**.

Additionally there is a warning label on the side of the instrument panel, visible when the front passenger door is open, or on the front passenger sun visor.

The front airbag system is triggered in the event of a front-end impact of a certain severity. The ignition must be switched on.

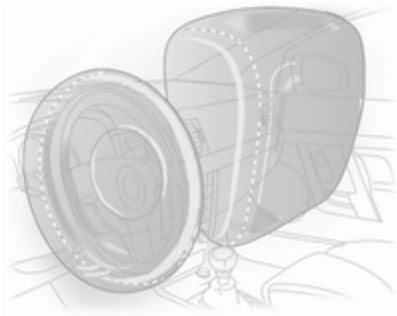

The inflated airbags cushion the impact, thereby reducing the risk of injury to the upper body and head of the front seat occupants considerably.

**⚠ Warning**

Optimum protection is only provided when the seat is in the proper position ⇨ 44.

Keep the area in which the airbag inflates clear of obstructions.

Fit the seat belt correctly and engage securely. Only then the airbag is able to protect.

## Side airbag system

The side airbag system consists of an airbag in each front seat backrest and in the rear outboard seat backrests. This can be identified by the word **AIRBAG**.

The side airbag system is triggered in the event of a side impact of a certain severity. The ignition needs to be switched on.

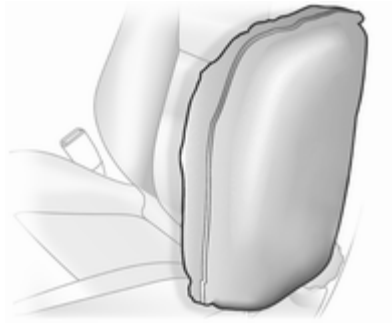

The inflated airbags cushion the impact, thereby reducing the risk of injury to the upper body and pelvis in the event of a side-on collision considerably.

**⚠Warning**

Keep the area in which the airbag inflates clear of obstructions.

**Note**
Only use protective seat covers that have been approved for the vehicle. Be careful not to cover the airbags.

## Curtain airbag system

The curtain airbag system consists of an airbag in the roof frame on each side. This can be identified by the word **AIRBAG** on the roof pillars.

The curtain airbag system is triggered in the event of a side-on impact of a certain severity. The ignition needs to be switched on.

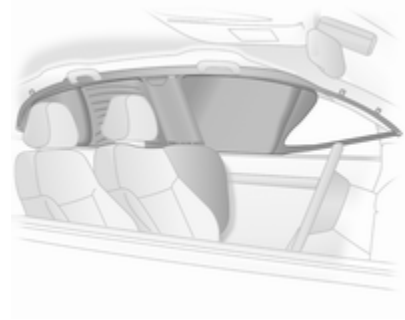

The inflated airbags cushion the impact, thereby reducing the risk of injury to the head in the event of a side-on impact considerably.

**⚠ Warning**

Keep the area in which the airbag inflates clear of obstructions.

The hooks on the handles in the roof frame are only suitable for hanging up light articles of clothing, without coat hangers. Do not keep any items in these clothes.

## Airbag deactivation

Front airbag and side airbag systems for the front passenger seat must be deactivated if a child restraint system is to be fitted on this seat. The curtain airbag system, the belt pretensioners and all driver airbag systems will remain active.

The front passenger airbag system can be deactivated via a key-operated switch on the right side of the instrument panel.

Use the ignition key to choose the position:

- = front passenger airbags are deactivated and will not inflate in the event of a collision. Control indicator illuminates continuously. A child restraint system can be installed in accordance with the chart Child restraint installation locations ⇨ 59. No adult person is allowed to occupy the front passenger seat.
- = front passenger airbags are active. A child restraint system must not be installed.

**⚠ Danger**

Risk of fatal injury for a child using a child restraint system on a seat with activated front passenger airbag.

Risk of fatal injury for an adult person on a seat with deactivated front passenger airbag.

As long as the control indicator is not illuminated, the airbag systems for the front passenger seat will inflate in the event of a collision.

If both control indicators are illuminated at the same time, there is a system failure. The status of the system is not discernible, therefore no person is allowed to occupy the front passenger seat. Contact a workshop immediately.

Consult a workshop immediately if neither of the two control indicators is illuminated.

Change status only when the vehicle is stopped with the ignition off.

Status remains until the next change.

Control indicator for airbag deactivation ⇨ 93.

# Child restraints

## Child restraint systems

We recommend the Opel child restraint system which is tailored specifically to the vehicle.

When a child restraint system is being used, pay attention to the following usage and installation instructions and also those supplied with the child restraint system.

Always comply with local or national regulations. In some countries, the use of child restraint systems is forbidden on certain seats.

**⚠ Danger**

When using a child restraint system on the front passenger seat, the airbag systems for the front passenger seat must be

deactivated; if not, the triggering of the airbags poses a risk of fatal injury to the child.

This is especially the case if rear-facing child restraint systems are used on the front passenger seat.

## Selecting the right system

The rear seats are the most convenient location to fasten a child restraint system.

Children should travel facing rearwards in the vehicle as long as possible. This makes sure that the child's backbone, which is still very weak, is under less strain in the event of an accident.

Suitable are restraint systems that comply with ECE 44-03 or ECE 44-04. Check local laws and regulations for mandatory use of child restraint systems.

Ensure that the child restraint system to be installed is compatible with the vehicle type.

Ensure that the mounting location of the child restraint system within the vehicle is correct.

Allow children to enter and exit the vehicle only on the side facing away from the traffic.

When the child restraint system is not in use, secure the seat with a seat belt or remove it from the vehicle.

**Note**

Do not stick anything on the child restraint systems and do not cover them with any other materials.

A child restraint system which has been subjected to stress in an accident must be replaced.

# Child restraint installation locations

## Permissible options for fitting a child restraint system

| Weight and age class | On front passenger seat activated airbag | On front passenger seat deactivated airbag | On rear outboard seats | On rear centre seat |
|---|---|---|---|---|
| **Group 0: up to 10 kg** or approx. 10 months | X | U[1] | U[2] | U[2] |
| **Group 0+: up to 13 kg** or approx. 2 years | X | U[1] | U[2] | U[2] |
| **Group I: 9 to 18 kg** or approx. 8 months to 4 years | X | U[1] | U[2] | U[2] |
| **Group II: 15 to 25 kg** or approx. 3 to 7 years | X | X | U | U |
| **Group III: 22 to 36 kg** or approx. 6 to 12 years | X | X | U | U |

[1] = Only if front passenger seat airbag system is deactivated. If the child restraint system is being secured using a three-point seat belt, move seat height adjustment to uppermost position and ensure that vehicle safety belt runs forwards from the upper anchorage point. Adjust seat backrest inclination as far as necessary to a vertical position to ensure that the belt is tight on the buckle side.

[2] = Seat available with ISOFIX and Top-Tether mounting brackets.

U = Universal suitability in conjunction with three-point seat belt.

X = No child restraint system permitted in this weight class.

## Permissible options for fitting an ISOFIX child restraint system

| Weight class | Size class | Fixture | On front passenger seat | On rear outboard seats | On rear centre seat |
|---|---|---|---|---|---|
| Group 0: up to 10 kg | E | ISO/R1 | X | IL | IL |
| Group 0+: up to 13 kg | E | ISO/R1 | X | IL | IL |
| | D | ISO/R2 | X | IL | IL |
| | C | ISO/R3 | X | IL | IL |
| Group I: 9 to 18 kg | D | ISO/R2 | X | IL | IL |
| | C | ISO/R3 | X | IL | IL |
| | B | ISO/F2 | X | IL, IUF | IL, IUF |
| | B1 | ISO/F2X | X | IL, IUF | IL, IUF |
| | A | ISO/F3 | X | IL, IUF | IL, IUF |

IL = Suitable for particular ISOFIX restraint systems of the 'specific-vehicle', 'restricted' or 'semi-universal' categories. The ISOFIX restraint system must be approved for the specific vehicle type.
IUF = Suitable for ISOFIX forward-facing child restraint systems of universal category approved for use in this weight class.
X = No ISOFIX child restraint system approved in this weight class.

## ISOFIX size class and seat device

| | | |
|---|---|---|
| A – ISO/F3 | = | Forward-facing child restraint system for children of maximum size in the weight class 9 to 18 kg. |
| B – ISO/F2 | = | Forward-facing child restraint system for smaller children in the weight class 9 to 18 kg. |
| B1 – ISO/F2X | = | Forward-facing child restraint system for smaller children in the weight class 9 to 18 kg. |
| C – ISO/R3 | = | Rear-facing child restraint system for children of maximum size in the weight class up to 13 kg. |
| D – ISO/R2 | = | Rear-facing child restraint system for smaller children in the weight class up to 13 kg. |
| E – ISO/R1 | = | Rear-facing child restraint system for young children in the weight class up to 13 kg. |

## ISOFIX child restraint systems

Fasten vehicle-approved ISOFIX child restraint systems to the ISOFIX mounting brackets. Specific vehicle ISOFIX child restraint system positions are marked in the table by IL.

No more than two ISOFIX child restraint systems can be installed on the rear seats at the same time, though not right next to each other.

ISOFIX mounting brackets are indicated by a label on the backrest.

## Top-tether fastening eyes

Top-Tether fastening eyes are marked with the symbol for a child seat.

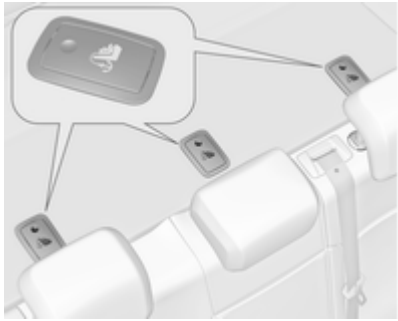

Open the flap of the required fastening eye, marked by the child seat symbol.

In addition to the ISOFIX mounting, fasten the Top-Tether strap to the Top-Tether fastening eyes. The strap must run between the two guide rods of the head restraint.

ISOFIX child restraint systems of universal category positions are marked in the table by IUF.

# Storage

Storage compartments ..... 63
Load compartment ..... 65
Roof rack system ..... 76
Loading information ..... 77

# Storage compartments

## Glovebox

The glovebox features a pen holder and a coin holder.

The glovebox should be closed whilst driving.

## Cupholders

Cupholders are located in the centre console.

Additional cupholders are located in the rear armrest. Fold down armrest.

## Front storage

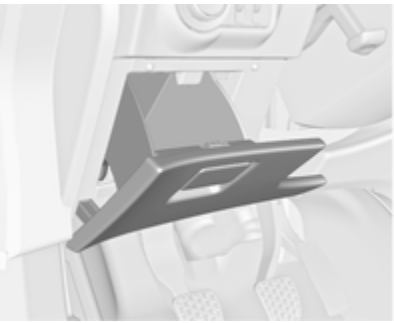

A storage compartment is located next to the steering wheel.

## Sunglasses storage

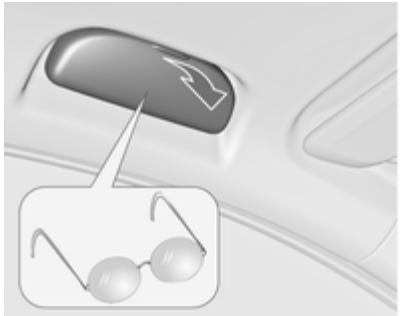

Fold down and open.

Do not use for storing heavy objects.

## Armrest storage

### Storage in the front armrest

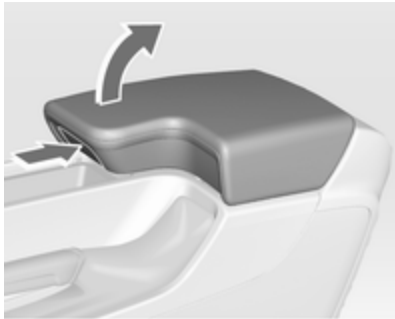

Push button to fold up the armrest.

## Storage in the rear armrest

Fold down armrest and open cover.

Close cover before folding the armrest up.

# Load compartment

## Folding down rear seat backrests

The rear seat backrest is divided into two parts. Both parts can be folded down.

Remove the load compartment cover if necessary.

Press and hold the catch, then push the head restraints down.

Fold up the rear armrest.

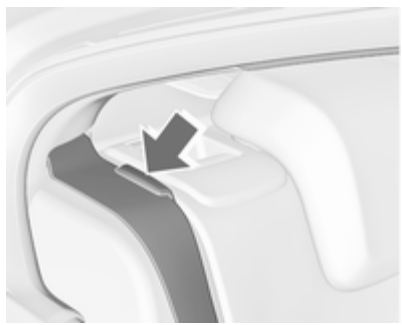

Put the seat belts of the outboard seats into the belt guides.

Pull the release lever on one or both sides and fold down the backrests onto the seat cushion.

To fold up, raise backrests and guide them into an upright position until they engage audibly.

Ensure that the seat belts of the outboard seats are placed in the corresponding belt guides.

The backrests are properly engaged when both red marks on the side near the release lever are no longer visible.

**⚠ Warning**

Only drive the vehicle if the backrests are securely locked into position. Otherwise there is a risk of personal injury or damage to the load or vehicle in the event of heavy braking or a collision.

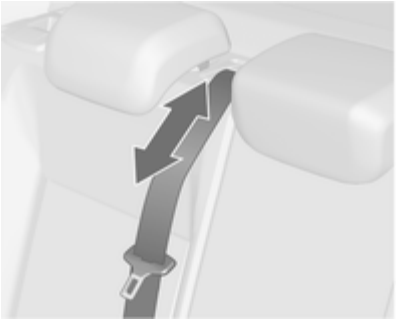

The seat belt of the centre seat could be blocked when the backrest is folded up too quickly. To unlock the retractor, push in the seat belt or pull it out by approximately 20 mm and then let go.

## Opening the pass-through in the rear centre backrest

Fold down rear armrest.

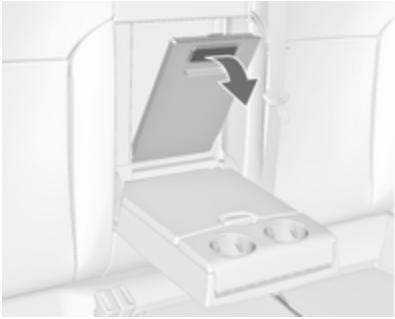

Pull grip and open the cover.

Suitable for loading long, narrow objects.

Ensure the cover engages after folding up.

The closed cover can be secured from the side of the load compartment. Turn knob by 90°:

| | | |
|---|---|---|
| knob horizontal | = | cover secured from the side of the passenger compartment |
| knob vertical | = | cover not secured |

## Storage in the load compartment

Depending on the equipment, there are storage boxes under the load compartment cover.

# Load compartment cover

Do not place any objects on the cover.

## 5-door Hatchback

### Removing cover

Unhook retaining straps from tailgate.

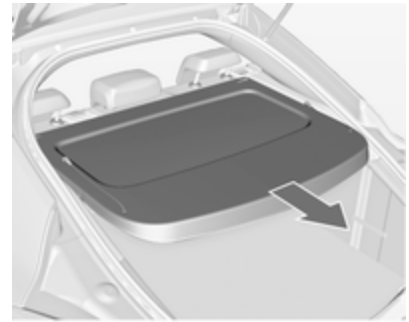

Pull cover from the side guides.

### Fitting cover

Engage cover in side guides and fold downwards. Attach the retaining straps to the tailgate.

## Sports Tourer

### Closing cover

Pull the cover towards the rear using the handle until it engages in the sideward retainers.

### Opening cover

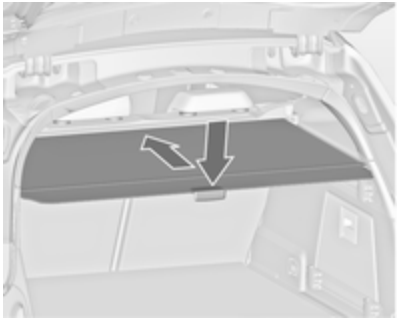

Push down the handle at the end of the cover. It rolls up automatically.

### Removing cover

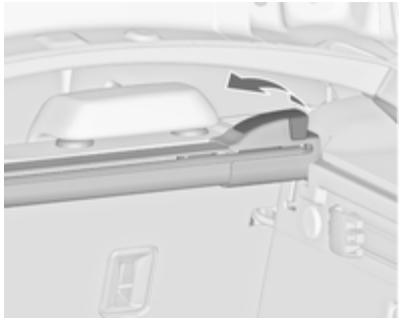

Open the load compartment cover.

Pull the release lever on the right side up and hold it. Lift the cover first on the right side and remove from retainers.

The removed cover can be stored under the load compartment floor ⇨ 72.

### Installing cover

Insert the left side of the load compartment cover in the recess, pull the release lever up and hold it, insert the right side of the load compartment cover and engage.

## Blind at the tailgate

To cover the load compartment completely, mount the blind at four fixing points on the inside of the tailgate.

# Rear floor storage cover

## Sliding floor cover (FlexFloor)

For a convenient setting of the load compartment, the floor cover can be pulled out.

### Pulling out the floor cover

- Lift up the floor at the handle slightly until the spring rolls pop-up on each side.

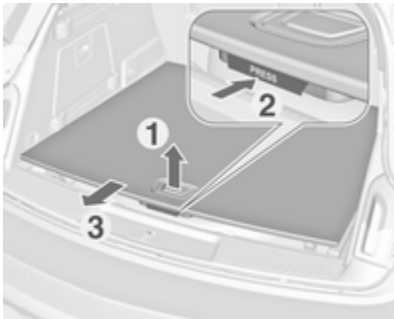


- Press the button under the handle and pull out the floor cover until it engages.

Load the floor in this position.

### Sliding back into load compartment

- Press the button under the handle and slide in the floor cover until it engages at the end position.

  Leave the floor cover in the raised position as long as it is loaded.

### To return the floor cover to its original position after unloading

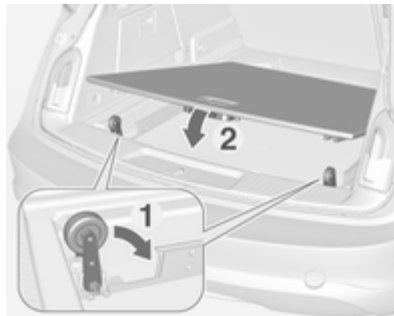


- Raise the floor cover at the handle slightly and push down the spring rolls on each side manually. Both spring rolls must engage in position.
- Lower the floor cover.

The pulled out floor cover can be loaded with max. 120 kg, a warning label is shown on the floor cover.

Secure objects with lashing straps attached to lashing eyes ⇨ 70. Loading information ⇨ 77.

**⚠ Warning**

Don't load or unload the compartment by using the sliding floor cover when the vehicle is parked on a sloped surface. The floor cover could run uncontrolled into the end positions.

Lift the floor cover up or down only unloaded.

Danger of injury.

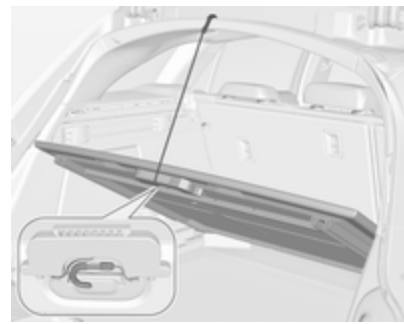

For access to the spare wheel or tyre repair kit, lift up the floor cover and attach the retaining strap at the upper edge of the tailgate recess. Lift up and attach the cover only without loading.

## Lashing eyes

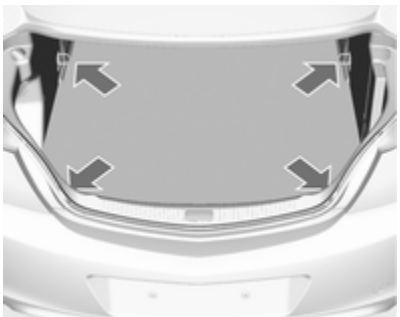

The lashing eyes are designed to secure items against slippage, e.g. using lashing straps or luggage net.

## Cargo management system

The FlexOrganizer is a flexible system for dividing up the load compartment.

The system consists of

- adapters,
- mesh pockets,
- hooks,
- service box,
- strap set.

The components are fitted in rails on both side panels using adapters and hooks.

### Installation of adapters in the rails

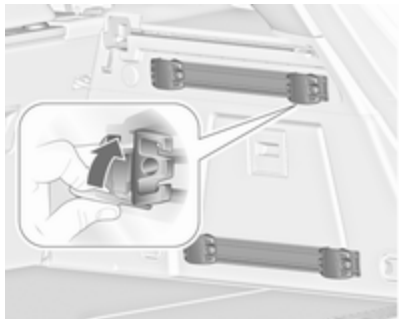

Fold open the handle plate, insert the adapter into the upper and lower groove of the rail and move to the required position. Turn the handle plate upwards to lock the adapter. To remove, turn the handle plate down and move out of the rail.

## Variable partition net

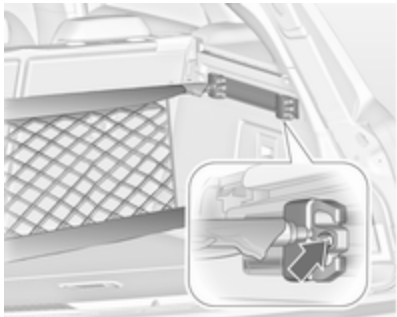

Insert adapters into the required position in the rails. Stick together the halves of the net rods.

To install, push rods together a little and insert into the relevant openings in the adapters.

To remove, press the net rods together and remove from the adapters.

## Net pocket

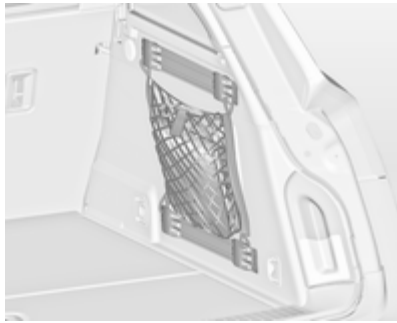

Insert adapters into the required position in the rails. The net pocket can be suspended from the adapters.

## Installation of hooks in the rails

Insert the hook in the desired position first in the upper groove of the rail and then press in the lower groove. To remove, first pull out of the upper groove.

## Service box

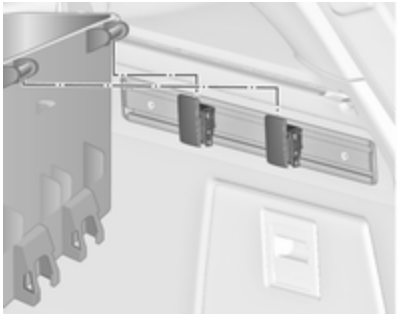

Install two hooks in the upper rail. Insert the upper brackets of the box from above into the hooks.

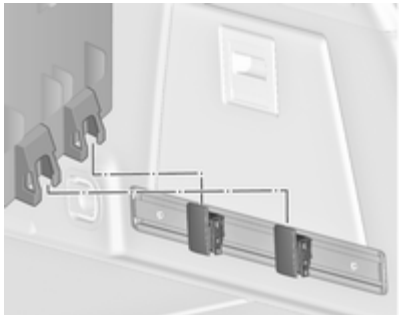

Alternatively install both hooks in the lower rail. Plug in the lower brackets of the box from above into the lower hooks.

## Strap set

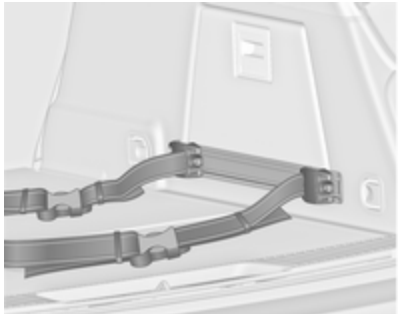

Insert the adapters of the strap set in a rail. Make sure that the belt is not twisted.

The strap set has two locks to open.

The belt can be tightened.

# Safety net

Two different safety nets can be installed behind the front seats or rear seats.

Passengers must not be transported behind the safety net.

## Safety net behind the front seats

Push head restraints of the rear seats down and fold down rear seat backrests ⇨ 65.

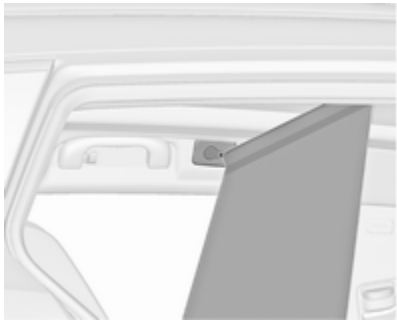

Front installation openings in the roof frame: latch rod of the net at one side, compress rod and latch at the other side.

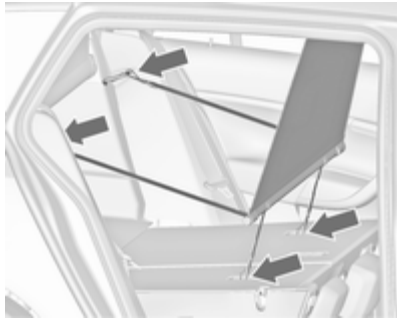

Fit the hooks of the small belts into the Top-Tether mounting loops on the back side of the folded rear seat backrests.

Fit the hooks of the wider belts into the locking devices of the rear seat backrests.

## Safety net cassette behind the rear seats

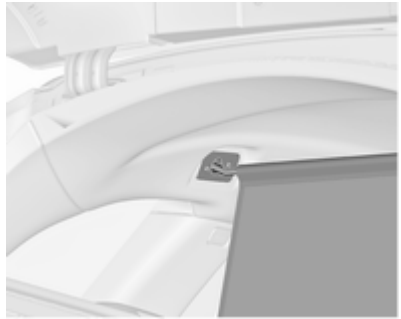

Pull out the net from the cassette and latch the rod of the net at one side into the rear installation opening in the roof frame. Compress the rod and latch at the other side.

### Removal of the cassette

Roll up safety net.

Remove load compartment cover ⇨ 67.

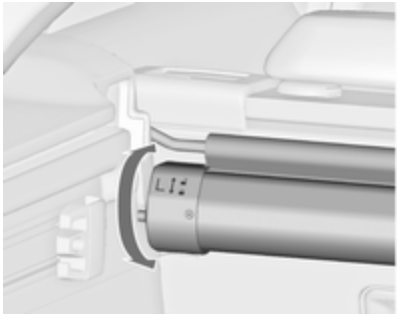

To unlock, turn cassette slightly backwards and remove it upwards from the retainers.

**Installation of the cassette**
Remove load compartment cover.

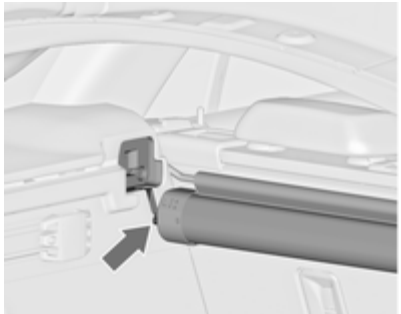

Insert the cassette into the retainers on left and right side. Note the signs **L** (left side) and **R** (right side) on the cassette as an installation hint.

Turn cassette slightly forwards to lock.

## Stowage of safety nets and load compartment cover

Rear safety net cassette can be placed, together with the load compartment cover and the coiled up safety net, under the load compartment floor.

Open the load compartment floor by pulling the handle. Fold and place the floor behind the rear seats.

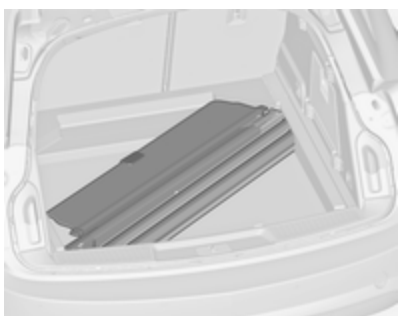

Put the load compartment cover into the hollow with the upper side downwards and with the release lever in the front right edge.

## Warning triangle

### 5-door Hatchback/4-door Saloon

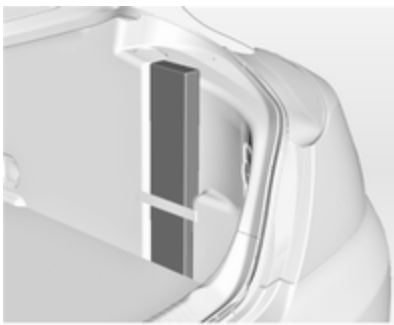

Stow the warning triangle in the space behind the strap on the right side of the load compartment.

### Sports Tourer

Stow the warning triangle in the space behind the straps on the inside of the tailgate.

## First aid kit

### 5-door Hatchback/4-door Saloon

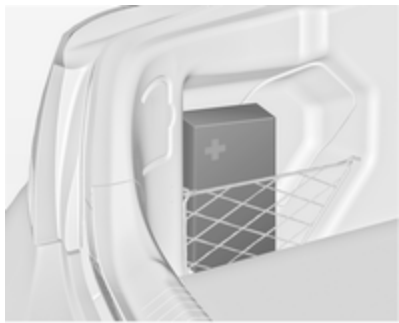

Stow the first aid kit in the space behind the mesh net on the left side of the load compartment.

### Sports Tourer

Stow the first aid kit in the space behind a strap on the inside of the tailgate.

# Roof rack system

## Roof rack

For safety reasons and to avoid damage to the roof, the vehicle approved roof rack system is recommended.

Follow the installation instructions and remove the roof rack when not in use.

## Mounting roof rack

### 5-door Hatchback/4-door Saloon

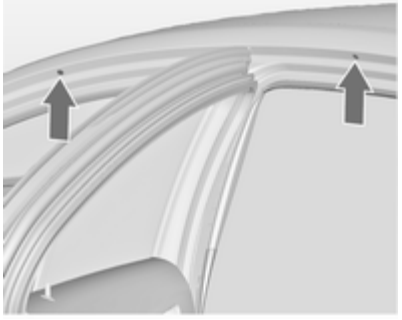

Open all doors.

Mounting points are located in each door frame of the vehicle body.

Detach the cover from each mounting point and fasten the roof rack with the attached screws.

### Sports Tourer with roof railing

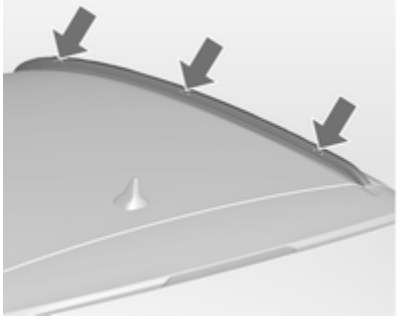

To fasten the roof rack, insert the mounting bolts in the holes indicated in the figure.

# Loading information

- Heavy objects in the load compartment should be placed against the seat backrests. Make sure that the backrests are securely engaged, i.e. no longer showing the red markings on the side near the release lever. If objects can be stacked, heavier objects should be placed at the bottom.
- Secure objects with lashing straps attached to lashing eyes ⇨ 70.
- Secure loose objects in the load compartment to prevent from sliding.
- When transporting objects in the load compartment, the backrests of the rear seats must not be angled forward.
- Do not allow the load to protrude above the upper edge of the backrests.
- Do not place any objects on the load compartment cover or the instrument panel, and do not cover the sensor on top of the instrument panel.
- The load must not obstruct the operation of the pedals, parking brake and gear selector, or hinder the freedom of movement of the driver. Do not place any unsecured objects in the interior.
- Do not drive with an open load compartment.

**⚠ Warning**

Always make sure that the load in the vehicle is securely stowed. Otherwise objects can be thrown around inside the vehicle and cause personal injury or damage to the load or car.

- The payload is the difference between the permitted gross vehicle weight (see identification plate ⇨ 239) and the EC kerb weight.

  To calculate the payload, enter the data for your vehicle in the Weights table at the front of this manual.

  The EC kerb weight includes weights for the driver (68 kg), luggage (7 kg) and all fluids (tank 90 % full).

  Optional equipment and accessories increase the kerb weight.
- Driving with a roof load increases the sensitivity of the vehicle to cross-winds and has a detrimental effect on vehicle handling due to

the vehicle's higher centre of gravity. Distribute the load evenly and secure it properly with retaining straps. Adjust the tyre pressure and vehicle speed according to the load conditions. Check and retighten the straps frequently.

Do not drive faster than 120 km/h.

The permissible roof load is 100 kg. The roof load is the combined weight of the roof rack and the load.

# Instruments and controls

Controls ..... 79
Warning lights, gauges and indicators ..... 87
Information displays ..... 98
Vehicle messages ..... 106
Trip computer ..... 110
Vehicle personalisation ..... 112

# Controls

## Steering wheel adjustment

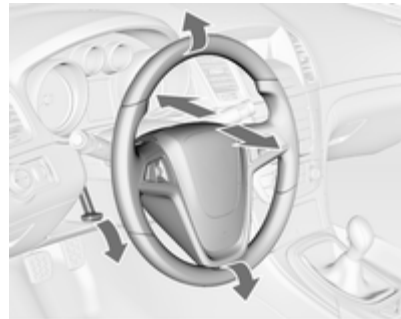

Unlock lever, adjust steering wheel, then engage lever and ensure it is fully locked.

Do not adjust steering wheel unless vehicle is stationary and steering wheel lock has been released.

## Steering wheel controls

The Infotainment system, some driver assistance systems and a connected mobile phone can be operated via the controls on the steering wheel.

Further information is available in the Infotainment system manual.

Driver assistance systems ⇨ 157.

## Heated steering wheel

Activate heating by pressing button. Activation is indicated by the LED in the button.

The recommended grip areas of the steering wheel are heated quicker and to a higher temperature than the other areas.

Heating is operational when the engine is running and during an Autostop.

Stop-start system ⇨ 140.

## Horn

Press .

# Windscreen wiper/washer

## Windscreen wiper

2 = fast
1 = slow
⊽ = interval wiping
O = off

For a single wipe when the windscreen wiper is off, press the lever down.

Do not use if the windscreen is frozen.

Switch off in car washes.

### Adjustable wiper interval

Wiper lever in position ⊽.

Turn the adjuster wheel to adjust the desired wipe interval:

| | | |
|---|---|---|
| short interval | = | turn adjuster wheel upwards |
| long interval | = | turn adjuster wheel downwards |

### Automatic wiping with rain sensor

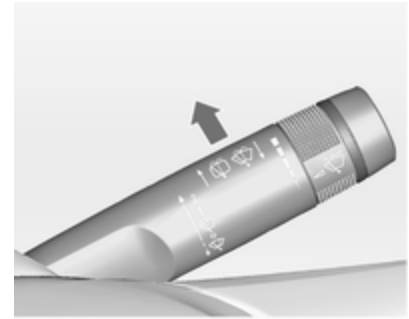

⊽ = automatic wiping with rain sensor

The rain sensor detects the amount of water on the windscreen and automatically regulates the frequency of the windscreen wiper.

### Adjustable sensitivity of the rain sensor

Turn the adjuster wheel to adjust the sensitivity:

| | | |
|---|---|---|
| low sensitivity | = | turn adjuster wheel downwards |
| high sensitivity | = | turn adjuster wheel upwards |

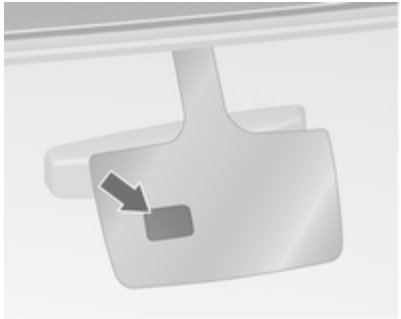

Keep the sensor free from dust, dirt and ice.

## Windscreen and headlight washer

Pull lever. Washer fluid is sprayed onto the windscreen and the wiper wipes a few times.

If the headlights are on, washer fluid is also sprayed onto the headlights, provided that the lever is pulled sufficiently long. Afterwards the headlight washer system is inoperable for 5 wash cycles or until engine or headlights have been switched off and on again.

## Rear window wiper/washer

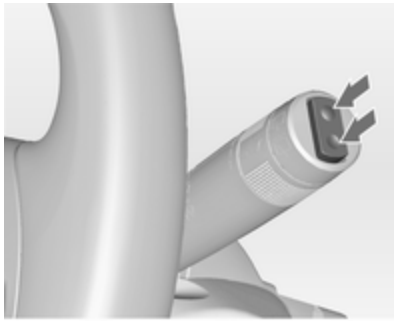

Push the rocker switch to activate the rear window wiper:

| | | |
|---|---|---|
| upper position | = | continuous operation |
| lower position | = | intermittent operation |
| middle position | = | off |

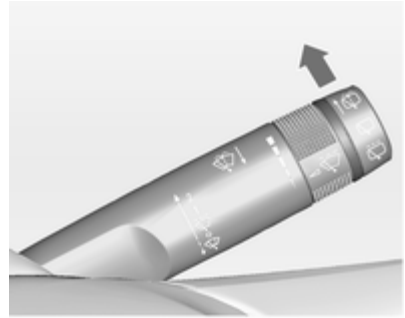

Push lever. Washer fluid is sprayed onto the rear window and the wiper wipes a few times.

Do not use if the rear window is frozen.

Switch off in car washes.

The rear window wiper comes on automatically when the windscreen wiper is switched on and reverse gear is engaged.

Activation or deactivation of this function can be changed in the menu **Settings** in the Info-Display.

Vehicle personalisation ⇨ 112.

The rear window washer system is deactivated when the fluid level is low.

## Outside temperature

A drop in temperature is indicated immediately and a rise in temperature after a time delay.

If outside temperature drops to 3 °C, a warning message is displayed in the Driver Information Centre with Uplevel-Display or Uplevel-Combi-Display.

| ⚠Warning |
| --- |
| The road surface may already be icy even though the display indicates a few degrees above 0 °C. |

## Clock

Date and time are shown in the Info-Display.

### Set date and time

Press the **CONFIG** button. The menu **Settings** is displayed.

Select **Time & Date**.

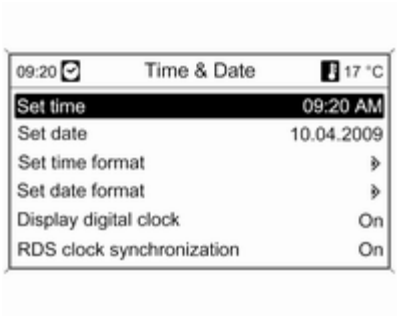


Selectable setting options:

- **Set time**: Changes the time shown on the display.
- **Set date**: Changes the date shown on the display.
- **Set time format**: Changes indication of hours between **12 hours** and **24 hours**.
- **Set date format**: Changes indication of date between **MM/DD/YYYY** and **DD.MM.YYYY**.
- **Display digital clock**: Switches on/off indication of time on the display.
- **RDS clock synchronization**: The RDS signal of most VHF transmitters automatically sets the time. RDS time synchronisation can take a few minutes. Some transmitters do not send a correct time signal. In such cases, it is recommended to switch off automatic time synchronisation.

Vehicle personalisation ⇨ 112.

## Power outlets

12 Volt power outlets are located in the front and rear centre console.

Do not exceed the maximum power consumption of 120 watts.

A 230 Volt power outlet is located in the rear centre console. If ignition is on and a device is plugged in, an LED in the outlet illuminates green.

Do not exceed the maximum power consumption of 150 watts.

| ⚠ Danger |
| --- |
| Power outlet works under high electrical voltage! |

With ignition off the power outlets are deactivated. Additionally the power outlets are deactivated in the event of low battery voltage.

Electrical accessories that are connected must comply with the electromagnetic compatibility requirements laid down in DIN VDE 40 839.

Do not connect any current-delivering accessories, e.g. electrical charging devices or batteries.

Do not damage the outlets by using unsuitable plugs.

Stop-start system ⇨ 140.

## Cigarette lighter

The cigarette lighter is located behind the ashtray cover.

Press ashtray cover to open.

Press in cigarette lighter. It switches off automatically once the element is glowing. Pull out lighter.

## Ashtrays

| Caution |
| --- |
| To be used only for ash and not for combustible rubbish. |

Press ashtray cover to open.

To empty, grip both sides of the ashtray insert and remove.

# Warning lights, gauges and indicators

## Speedometer

Indicates vehicle speed.

## Odometer

The bottom line displays the recorded distance in km.

## Trip odometer

The top line displays the recorded distance since the last reset.

To reset, press the **SET/CLR** button on the turn signal lever for a few seconds or press reset knob between speedometer and Driver Information Centre with the ignition on ⇨ 98.

Trip odometer counts up to a distance of 2000 km then restarts at 0.

## Tachometer

Displays the engine speed.

Drive in a low engine speed range for each gear as much as possible.

| Caution |
| --- |
| If the needle is in the red warning zone, the maximum permitted engine speed is exceeded. Engine at risk. |

## Fuel gauge

Displays the fuel level or gas level in the tank depending on the operation mode.

Control indicator ⬬ illuminates if the level in the tank is low. Refuel immediately if it flashes.

During liquid gas operation, the system automatically switches over to petrol operation when gas tanks are empty ⇨ 88.

Never run the tank dry.

Because of the fuel remaining in the tank, the top-up quantity may be less than the specified tank capacity.

## Fuel selector

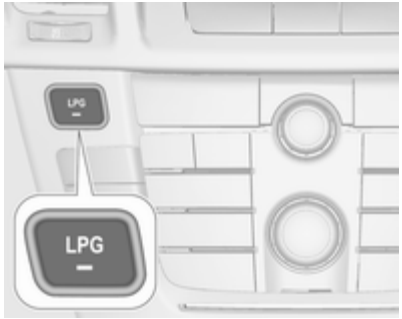


Pressing button **LPG** switches between petrol and liquid gas operation. The LED ▬ status shows the current operating mode.

| | | |
|---|---|---|
| ▬ off | = | petrol operation |
| ▬ illuminates | = | liquid gas operation |
| ▬ flashes | = | no switching is possible, one type of fuel is empty |

As soon as the liquid gas tank is empty, petrol operation is automatically engaged until the ignition is switched off.

Fuel for liquid gas operation ⇨ 181.

## Engine coolant temperature gauge

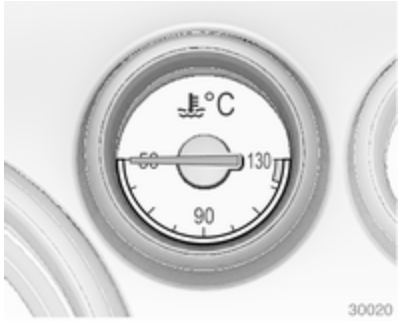


Displays the coolant temperature.

| | | |
|---|---|---|
| left area | = | engine operating temperature not yet reached |
| central area | = | normal operating temperature |
| right area | = | temperature too high |

**Caution**

If engine coolant temperature is too high, stop vehicle, switch off engine. Danger to engine. Check coolant level.

## Service display

The engine oil life system lets you know when to change the engine oil and filter. Based on driving conditions, the interval at which an engine oil and filter change will be indicated can vary considerably.

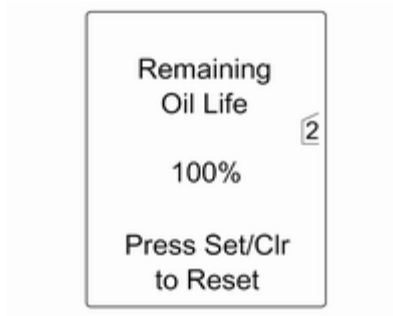


In the Uplevel-Display or Uplevel-Combi-Display the remaining oil life duration is displayed in the **Vehicle Information Menu**.

In the Midlevel-Display the remaining engine oil life duration is displayed by the control indicator ⚙. The ignition must be switched on, but engine not running.

The menu and function can be selected via the buttons on the turn signal lever.

To display the remaining engine oil life duration:

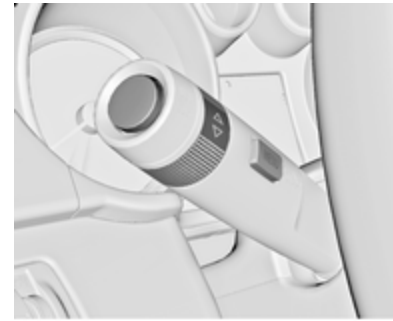

Press the **MENU** button to select the **Vehicle Information Menu**.

Turn the adjuster wheel to select **Remaining Oil Life**.

The system must be reset every time the engine oil is changed to allow proper functionality. Seek the assistance of a workshop.

Press the **SET/CLR** button to reset. The ignition must be switched on but engine not running.

When the system has calculated that engine oil life has been diminished, **Change Engine Oil Soon** or a warning code appears in the Driver

Information Centre. Have engine oil and filter changed by a workshop within one week or 500 km (whichever occurs first).

Driver Information Centre ⇨ 98.

Service information ⇨ 236.

## Control indicators

The control indicators described are not present in all vehicles. The description applies to all instrument versions. Depending on the equipment, the position of the control indicators may vary. When the ignition is switched on, most control indicators will illuminate briefly as a functionality test.

The control indicator colours mean:

| | | |
|---|---|---|
| red | = | danger, important reminder |
| yellow | = | warning, information, fault |
| green | = | confirmation of activation |
| blue | = | confirmation of activation |
| white | = | confirmation of activation |

## Control indicators in the instrument cluster

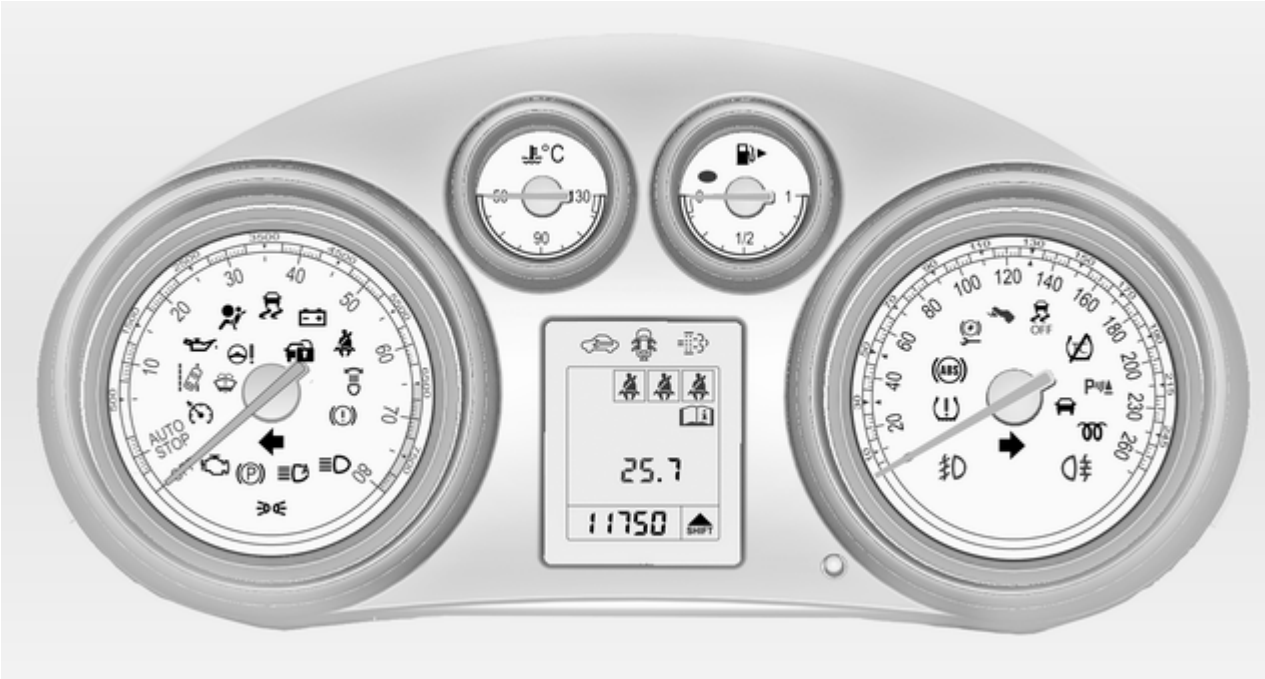

## Control indicators in the centre console

# Turn signal

⇦⇨ illuminates or flashes green.

## Illuminates briefly

The parking lights are switched on.

## Flashes

A turn signal or the hazard warning flashers are activated.

Rapid flashing: failure of a turn signal light or associated fuse, failure of turn signal light on trailer.

Bulb replacement ⇨ 199, Fuses ⇨ 209.

Turn signals ⇨ 123.

# Seat belt reminder

## Seat belt reminder on front seats

for driver's seat illuminates or flashes red in the tachometer.

2 for front passenger seat illuminates or flashes red in the centre console, when seat is occupied.

### Illuminates

After the ignition has been switched on until the seat belt has been fastened.

### Flashes

After having started the engine for a maximum of 100 seconds until the seat belt has been fastened.

## Seat belt status on rear seats

flashes or illuminates on the Driver Information Centre.

### Illuminates

After the ignition has been switched on when the seat belt has been fastened.

### Flashes

After starting off when the seat belt is unfastened.

Fastening the seat belt ⇨ 51.

# Airbag and belt tensioners

illuminates red.

When the ignition is switched on, the control indicator illuminates for approx. 4 seconds. If it does not illuminate, does not go out after 4 seconds or illuminates whilst driving, there is a fault in the airbag system. Seek the assistance of a workshop. The airbags and belt pretensioners may fail to trigger in the event of an accident.

Deployment of the belt pretensioners or airbags is indicated by continuous illumination of .

**⚠ Warning**

Have the cause of the fault remedied immediately by a workshop.

Belt pretensioners, airbag system ⇨ 50, ⇨ 53.

## Airbag deactivation

illuminates yellow.

The front passenger airbag is activated.

illuminates yellow.

The front passenger airbag is deactivated ⇨ 56.

**⚠ Danger**

Risk of fatal injury for a child using a child restraint system together with activated front passenger airbag.

Risk of fatal injury for an adult person with deactivated front passenger airbag.

## Charging system

illuminates red.

Illuminates when the ignition is switched on and extinguishes shortly after the engine starts.

### Illuminates when the engine is running

Stop, switch off engine. Battery is not charging. Engine cooling may be interrupted. The brake servo unit may cease to be effective. Seek the assistance of a workshop.

## Malfunction indicator light

illuminates or flashes yellow.

Illuminates when the ignition is switched on and extinguishes shortly after the engine starts.

### Illuminates when the engine is running

Fault in the emission control system. The permitted emission limits may be exceeded. Seek the assistance of a workshop immediately.

### Flashes when the engine is running

Fault that could lead to catalytic converter damage. Ease up on the accelerator until the flashing stops. Seek the assistance of a workshop immediately.

## Service vehicle soon

illuminates yellow.

Additionally a warning message or a warning code is displayed.

The vehicle needs a service.

Seek the assistance of a workshop.

Vehicle messages ⇨ 106.

## Brake and clutch system

### Brake and clutch fluid level

illuminates red.

The brake and clutch fluid level is too low ⇨ 196.

**⚠ Warning**

Stop. Do not continue your journey. Consult a workshop.

Illuminates after the ignition is switched on if the manual parking brake is applied ⇨ 151.

### Operate pedal

illuminates or flashes yellow.

#### Illuminates

Brake pedal needs to be operated to release the electrical parking brake ⇨ 151.

Clutch pedal needs to be operated to start the engine. Stop-start system ⇨ 140.

#### Flashes

Clutch pedal needs to be operated to start the engine ⇨ 139.

## Electrical parking brake

(P) illuminates or flashes red.

### Illuminates

Electrical parking brake is applied ⇨ 151.

### Flashes

Electrical parking brake is not fully applied or released. Depress the brake pedal and attempt to reset the system by first releasing and then applying the electrical parking brake. If (P) remains flashing, do not drive and seek the assistance of a workshop.

## Electrical parking brake fault

illuminates or flashes yellow.

### Illuminates

Electrical parking brake is operating with degraded performance ⇨ 151.

### Flashes

Electrical parking brake is in service mode. Stop vehicle, apply and release the electrical parking brake to reset.

**⚠ Warning**

Have the cause of the fault remedied immediately by a workshop.

## Antilock brake system (ABS)

(ABS) illuminates yellow.

Illuminates for a few seconds after the ignition is switched on. The system is ready for operation when the control indicator extinguishes.

If the control indicator does not go out after a few seconds, or if it illuminates while driving, there is a fault in the ABS. The brake system remains operational but without ABS regulation.

Antilock brake system ⇨ 150.

## Upshift

SHIFT illuminates green as control indicator, or is shown as a symbol in the Driver Information Centre with Uplevel-Display or Uplevel-Combi-

Display, when upshifting is recommended for fuel saving reasons.

On some versions gear shift indication is popped up as full page in the Driver Information Centre.

EcoFlex drive assistant ⇨ 110.

## Variable effort steering

illuminates yellow.

Fault in variable effort steering system. This may lead to a higher or lower steering effort. Consult a workshop.

## Lane departure warning

illuminates green or flashes yellow.

### Illuminates green

The system is switched on and ready to operate.

### Flashes yellow

The system recognizes an unintended lane change.

## Ultrasonic parking assist

P illuminates yellow.

Fault in system

or

Fault due to sensors that are dirty or covered by ice or snow

or

Interference due to external sources of ultrasound. Once the source of interference is removed, the system will operate normally.

Have the cause of the fault in the system remedied by a workshop.

Ultrasonic parking assist ⇨ 171.

## Electronic Stability Control off

illuminates yellow.

The system is deactivated.

## Electronic Stability Control and Traction Control system

illuminates or flashes yellow.

### Illuminates

A fault in the system is present. Continued driving is possible. Driving stability, however, may deteriorate depending on road surface conditions.

Have the cause of the fault remedied by a workshop.

### Flashes

The system is actively engaged. Engine output may be reduced and the vehicle may be braked automatically to a small degree.

Electronic Stability Control ⇨ 154, Traction Control system ⇨ 153.

## Traction Control system off

illuminates yellow.

The system is deactivated.

## Preheating

ϖ illuminates yellow.

Preheating is activated. Only activates when outside temperature is low.

## Diesel particle filter

illuminates or flashes yellow.

The diesel particle filter requires cleaning.

Continue driving until extinguishes. If possible do not allow engine speed to drop below 2000 rpm.

### Illuminates

The diesel particle filter is full. Start cleaning process as soon as possible.

### Flashes

The maximum filling level of the filter is reached. Start cleaning process immediately to avoid damage to the engine.

Diesel particle filter ⇨ 143.

Stop-Start system ⇨ 140.

## Tyre pressure monitoring system

illuminates or flashes yellow.

### Illuminates

Tyre pressure loss. Stop immediately and check tyre pressure.

### Flashes

Fault in system or tyre without pressure sensor mounted (e.g. spare wheel). After 60-90 seconds the control indicator illuminates continuously. Consult a workshop.

## Engine oil pressure

illuminates red.

Illuminates when the ignition is switched on and extinguishes shortly after the engine starts.

### Illuminates when the engine is running

| Caution |
| --- |
| Engine lubrication may be interrupted. This may result in damage to the engine and/or locking of the drive wheels. |

1. Depress clutch.
2. Select neutral gear, set selector lever to **N**.
3. Move out of the flow of traffic as quickly as possible without impeding other vehicles.
4. Switch off ignition.

**⚠ Warning**

When the engine is off, considerably more force is needed to brake and steer. During an Autostop the brake servo unit will still be operational.

Do not remove key until vehicle is stationary, otherwise the steering wheel lock could engage unexpectedly.

Check oil level before seeking assistance of a workshop ⇨ 193.

## Low fuel

⬬ illuminates or flashes yellow.

### Illuminates

Level in fuel tank is too low.

### Flashes

Fuel used up. Refuel immediately. Never run the tank dry.

Catalytic converter ⇨ 144.

Bleeding the diesel fuel system ⇨ 198.

## Immobiliser

🔒 flashes yellow.

Fault in the immobiliser system. The engine cannot be started.

## Exterior light

illuminates green.

The exterior lights are on ⇨ 118.

## High beam

illuminates blue.

Illuminated when high beam is on or during headlight flash ⇨ 119.

## High beam assist

illuminates green.

The high beam assist is activated, see adaptive forward lighting ⇨ 121.

## Adaptive forward lighting

illuminates or flashes yellow.

### Illuminates

Fault in system.

Seek the assistance of a workshop.

### Flashes

System switched to symmetrical low beam.

Control indicator flashes for approx. 4 seconds after the ignition is switched on as a reminder that the system has been activated ⇨ 120.

Automatic light control ⇨ 119.

## Fog light

illuminates green.

The front fog lights are on ⇨ 124.

## Rear fog light

illuminates yellow.

The rear fog light is on ⇨ 124.

## Low washer fluid

illuminates yellow.

The washer fluid level is low.

Washer fluid ⇨ 196.

## Cruise control

illuminates white or green.

### Illuminates white

The system is on.

### Illuminates green

Cruise control is active.

Cruise control ⇨ 157.

## Adaptive cruise control

illuminates white or green.

### Illuminates white

The system is on.

### Illuminates green

Adaptive cruise control is active.

Adaptive cruise control ⇨ 158.

## Vehicle detected ahead

illuminates green.

A vehicle ahead is detected in the same lane.

Adaptive cruise control ⇨ 158, Forward collision alert ⇨ 165.

## Door open

illuminates red.

A door or the tailgate is open.

# Information displays

## Driver Information Centre

The Driver Information Centre (DIC) is located in the instrument cluster between speedometer and tachometer. It is available as Midlevel-Display, Uplevel-Display or Uplevel-Combi-Display.

Midlevel-Display indicates:

- overall odometer
- trip odometer
- some control indicators
- vehicle information

- trip/fuel information
- vehicle messages, displayed as code numbers ⇨ 106.

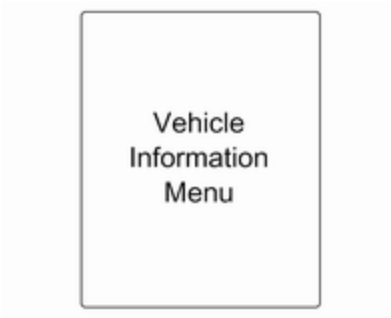


In the Uplevel-Display the following main menus can be selected by pushing the **MENU** button:

- **Vehicle Information Menu**
- **Trip/Fuel Information Menu**
- **Performance Menu**

In the Uplevel-Combi-Display, menu pages can be selected by pushing the **MENU** button. Menu symbols are indicated in the top line of the display:

- **Vehicle Information Menu**
- **Trip/Fuel Information Menu**
- **ECO ECO Information Menu**
- **Performance Menu**

Some of the displayed functions differ when the vehicle is being driven or at a standstill. Some functions are only available when the vehicle is being driven.

Vehicle personalisation ⇨ 112.
Memorised settings ⇨ 22.

## Selecting menus and functions

The menus and functions can be selected via the buttons on the turn signal lever.

Press the **MENU** button to switch between the menus or to return from a submenu to the next higher menu level.

Turn the adjuster wheel to highlight a menu option or to set a numeric value.

Press the **SET/CLR** button to select a function or to confirm a message.

## Vehicle Information Menu

Press the **MENU** button to select the **Vehicle Information Menu**, or on Uplevel-Combi-Display select 🚗.

Turn the adjuster wheel to select a submenu. Press the **SET/CLR** button to confirm.

Follow the instructions provided in the submenus.

Depending on the version, the possible submenus can be:

- **Unit**: displayed units can be changed
- **Language**: displayed language can be changed if the vehicle is not equipped with a radio.
- **Tyre Pressure**: checks tyre pressure of all wheels during driving ⇨ 217

- **Remaining Oil Life**: indicates when to change the engine oil and filter ⇨ 89

- **Speed Warning**: if exceeding the preset speed, a warning chime will be activated
- **Traffic Sign Assistant**: displays detected traffic signs for the current route section ⇨ 176
- **Following Distance Indication**: displays the distance to a preceding moving vehicle ⇨ 169

Selection and indication can be different between Midlevel-, Uplevel-, and Uplevel-Combi-Display.

## Trip/Fuel Information Menu

Press the **MENU** button to select the **Trip/Fuel Information Menu**, or select / ⁝ \ on Uplevel-Combi-Display.

Turn the adjuster wheel to select a submenu. Press the **SET/CLR** button to confirm.

- Trip odometer 1
- Trip odometer 2
- Digital speed

Trip odometer 2 and digital speed are only available on vehicles with Uplevel-Display or Uplevel-Combi-Display.

Reset trip odometer by pressing the **SET/CLR** button on the turn signal lever for a few seconds or by pressing the reset knob between speedometer and Driver Information Centre with the ignition on.

On vehicles with trip computer more submenus are available.

Selection and indication can be different between Midlevel-, Uplevel-, and Uplevel-Combi-Display.

Trip/Fuel Information Menu, Trip Computer ⇨ 110.

## ECO Information Menu

Press the **MENU** button to select **ECO** in the top line of the Uplevel-Combi-Display.

Turn the adjuster wheel to select a submenu. Press the **SET/CLR** button to confirm.

Submenus are:

- **Shift indication**: Current gear is indicated inside an arrow. The cypher above recommends upshifting for fuel saving reasons.

  **Eco index display**: The current fuel consumption is indicated on a segment display. For economical driving adapt your driving style to keep the filled segments within the Eco area. The more segments are filled, the higher the fuel consumption. Simultaneously the current consumption value is indicated.

- **Top Consumers**: List of top comfort consumers currently switched on is displayed in descending order. Fuel saving potential is indicated. A switched-off consumer disappears from the list and the consumption value will be updated.

- **Economy Trend**: Displays the average consumption development over a distance of 50 km. Filled segments display the consumption in 5 km steps and shows the effect of topography or driving behaviour on fuel consumption.

## Performance Menu

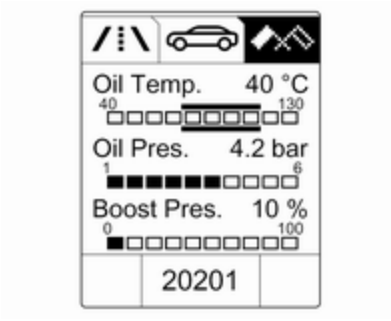


Press the **MENU** button to select the **Performance Menu**, or select on Uplevel-Combi-Display.

Turn the adjuster wheel to select a submenu. Press the **SET/CLR** button to confirm.

Submenus are:

- **Oil Temp.**: Display of oil temperature.
- **Oil Pres.**: Display of oil pressure.
- **Boost Pres.**: Display of turbo boost pressure.
- **Lap Timer**: Display of lap times, top speed, average speed and average time. Follow the instructions provided in the submenu.
- **Coolant Temp.**: Display of coolant temperature.
- **Battery Volt.**: Display of battery voltage.

# Graphic-Info-Display, Colour-Info-Display

Depending on the vehicle configuration the vehicle has a Graphic- or Colour-Info-Display. The Info-Display is located in the instrument panel above the Infotainment system.

## Graphic-Info-Display

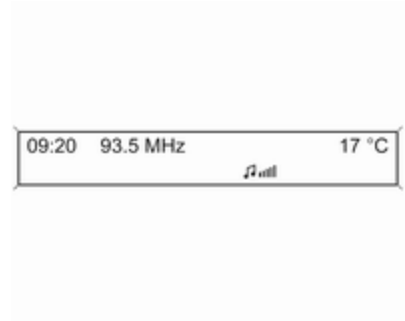


Depending on the Infotainment system, the Graphic-Info-Display is available in two versions.

Graphic-Info-Display indicates:

- time ⇨ 84
- outside temperature ⇨ 83
- date ⇨ 84
- Infotainment system, see Infotainment system manual
- settings for vehicle personalisation ⇨ 112

## Colour-Info-Display

The Colour-Information-Display indicates in colour:

- time ⇨ 84
- outside temperature ⇨ 83
- date ⇨ 84
- Infotainment system, see Infotainment system manual
- navigation, see Infotainment system manual
- system settings
- vehicle messages ⇨ 106
- settings for vehicle personalisation ⇨ 112

The type of information and how it is displayed depends on the equipment of the vehicle and the settings made.

## Selecting menus and settings

Menus and settings are accessed via the display.

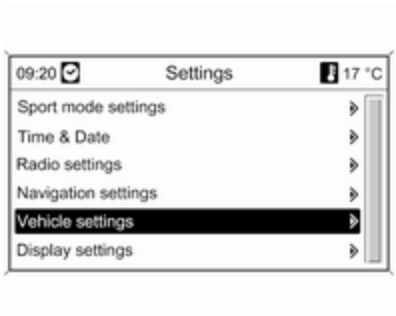

Selections are made via:

- menus
- function buttons and multifunction knob of the Infotainment system
- function buttons and multifunction knob of the multifunction unit in the centre console.

### Selecting with the Infotainment system

Select a function via the Infotainment system buttons. The menu of the selected function is displayed.

The multifunction knob is used to select an item and to confirm.

### Selecting with the multifunction unit

Select a function via the buttons of the multifunction unit. The menu of the selected function is displayed.

The multifunction knob is used to select an item and to confirm.

### Multifunction knob

The multifunction knob is the central control element for the menus:

**Turn**

- To mark a menu option
- To set a numeric value or to display a menu option

**Press (the outer ring)**

- To select or activate the marked option
- To confirm a set value
- To switch a system function on/off

**BACK** button

Press button to:

- exit a menu without changing settings
- return from a submenu to a higher menu level
- delete a last character in a character sequence

Press and hold the button for a few seconds to delete the entire entry.

Vehicle personalisation ⇨ 112, Memorised settings ⇨ 22.

## Smartphone controller

The smartphone controller allows a smartphone to access vehicle data via WLAN or Bluetooth connection. This data can then be displayed and analysed on the smartphone.

# Vehicle messages

Messages are indicated mainly in the Driver Information Centre (DIC), in some cases together with a warning and signal buzzer.

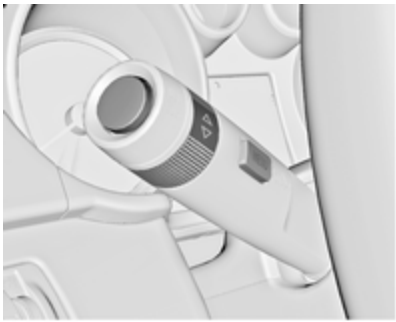

Press the **SET/CLR** button, the **MENU** button or turn the adjuster wheel to confirm a message.

## Vehicle messages on the Midlevel-Display

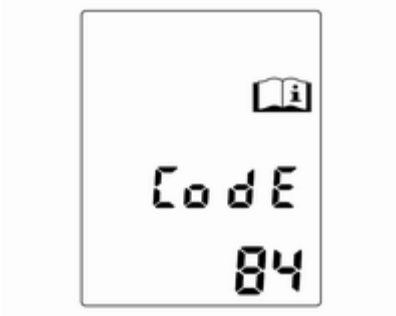


The vehicle messages are displayed as code numbers.

| No. | Vehicle message |
|---|---|
| 2 | No radio remote control detected, depress clutch pedal for a restart |
| 3 | Engine coolant level low |
| 4 | Air conditioning off |
| 5 | Steering wheel is locked |
| 6 | Depress brake pedal to release electrical parking brake |
| 7 | Turn steering wheel, switch ignition off and then on |
| 9 | Turn steering wheel, start engine again |
| 12 | Vehicle overloaded |
| 13 | Compressor overheated |
| 15 | Centre high-mounted brake light failure |
| 16 | Brake light failure |
| 17 | Headlight levelling malfunction |
| 18 | Left low beam failure |
| 19 | Rear fog light failure |
| 20 | Right low beam failure |
| 21 | Left sidelight failure |
| 22 | Right sidelight failure |
| 23 | Reversing light failure |

| No. | Vehicle message |
|---|---|
| 24 | Number plate light failure |
| 25 | Left front turn signal failure |
| 26 | Left rear turn signal failure |
| 27 | Right front turn signal failure |
| 28 | Right rear turn signal failure |
| 29 | Check trailer brake light |
| 30 | Check trailer reversing light |
| 31 | Check left trailer turn signal |
| 32 | Check right trailer turn signal |
| 33 | Check trailer rear fog light |
| 34 | Check trailer rear light |
| 35 | Replace battery in radio remote control |
| 48 | Clean side blind zone alert system |
| 49 | Lane departure warning unavailable |
| 53 | Tighten gas cap |

| No. | Vehicle message |
|---|---|
| 54 | Water in diesel fuel filter |
| 55 | Diesel particle filter is full ⇨ 143 |
| 56 | Tyre pressure imbalance on front axle |
| 57 | Tyre pressure imbalance on rear axle |
| 58 | Tyres without TPMS sensors detected |
| 59 | Open and then close driver window |
| 60 | Open and then close front passenger window |
| 61 | Open and then close rear left window |
| 62 | Open and then close rear right window |
| 65 | Theft attempted |
| 66 | Service theft alarm system |
| 67 | Service steering wheel lock |

| No. | Vehicle message |
|---|---|
| 68 | Service power steering |
| 69 | Service suspension system |
| 70 | Service level control system |
| 71 | Service rear axle |
| 73 | Service All-wheel drive system |
| 74 | Service AFL |
| 75 | Service air conditioning |
| 76 | Service side blind zone alert system |
| 77 | Service lane departure warning |
| 78 | Service pedestrian protection system |
| 79 | Top up engine oil |
| 81 | Service transmission |
| 82 | Change engine oil soon |
| 83 | Service adaptive cruise control |
| 84 | Engine power is reduced |

| No. | Vehicle message |
|---|---|
| 94 | Shift to park before exiting |
| 95 | Service Airbag |
| 128 | Open hood |
| 134 | Park assist fault, clean bumper |
| 136 | Service parking assist |
| 145 | Check washer fluid level |
| 174 | Low battery |
| 258 | Park assist off |

## Vehicle messages on the Uplevel-Display or Uplevel-Combi-Display

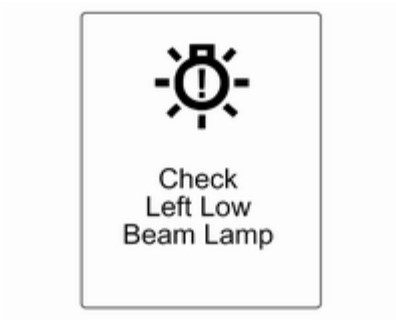


The vehicle messages are displayed as text. Follow the instructions given in the messages.

The system displays messages regarding the following topics:

- Fluid levels
- Anti-theft alarm system
- Brakes
- Drive systems
- Ride control systems
- Cruise control
- Object detection systems
- Lighting, bulb replacement
- Wiper/washer system
- Doors, windows
- Radio remote control
- Seat belts
- Airbag systems
- Engine and transmission
- Tyre pressure
- Diesel particle filter

## Vehicle messages on the Colour-Info-Display

Some important messages appear additionally in the Colour-Info-Display. Press the multifunction knob to confirm a message. Some messages only pop-up for a few seconds.

# Warning chimes

## When starting the engine or whilst driving

Only one warning chime will sound at a time.

The warning chime regarding not fastened seat belts has priority over any other warning chime.

- If seat belt is not fastened.
- If a door or the tailgate is not fully closed when starting off.
- If a certain speed is exceeded with parking brake applied.
- If a programmed speed is exceeded.
- If a warning message or a warning code appears in the Driver Information Centre.
- If the parking assist detects an object.
- If the diesel particle filter has reached the maximum filling level.

## When the vehicle is parked and/ or the driver's door is opened

- When the key is in the ignition switch.
- With exterior lights on.
- If the trailer hitch is not engaged.

# Battery voltage

When the battery voltage is running low, a warning message or warning code 174 will appear in the Driver Information Centre.

1. Switch off immediately electrical consumers which are not required for a safe ride, such as seat heating, heated rear window or other main consumers.
2. Charge the battery by driving continuously for a while or by using a charging device.

The warning message or warning code will disappear after the engine has been started two times running without voltage drop.

If the battery cannot be recharged, have the cause of the fault remedied by a workshop.

# Trip computer

The menus and functions can be selected via the buttons on the turn signal lever ⇨ 98.

Press the **MENU** button to select the **Trip/Fuel Information Menu**, or select / ⁝ \ on the Uplevel-Combi-Display.

**Trip/Fuel Information Menu on Uplevel-Display**

Turn the adjuster wheel to select one of the submenus:

- Trip odometer 1
- Trip odometer 2
- Range
- Average consumption
- Instantaneous consumption
- Average speed
- Digital speed
- Traffic sign assistant
- Route guidance

**Trip/Fuel Information Menu on Uplevel-Combi-Display**

Turn the adjuster wheel to select the submenus:

- Trip odometer 1
- Average consumption 1
- Average speed 1

- Trip odometer 2
- Average consumption 2
- Average speed 2

- Digital speed
- Range
- Instantaneous consumption
- Route guidance

## Trip computer 1 and 2

The information of two trip computers can be reset separately for odometer, average consumption and average speed by pressing the **SET/CLR** button, making it possible to display different trip information for different drivers.

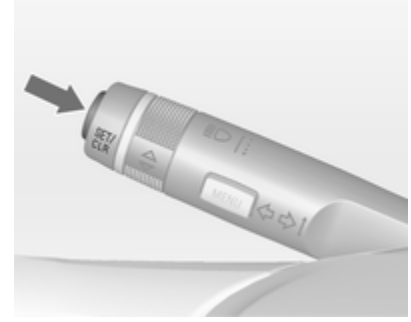


## Trip odometer

Trip odometer displays the recorded distance since a certain reset.

Trip odometer counts up to a distance of 2000 km then restarts at 0.

To reset, press the **SET/CLR** button for a few seconds.

### Range

Range is calculated from current fuel tank content and current consumption. The display shows average values.

After refuelling, the range is updated automatically after a brief delay.

When the fuel level in the tank is low, a message appears on vehicles with Uplevel-Display or Uplevel-Combi-Display.

When the tank has to be refuelled immediately, a warning code or warning message is displayed on vehicles with Midlevel- and Uplevel-Display or Uplevel-Combi-Display.

Additionally the control indicator ⬬ in the fuel gauge illuminates or flashes ⇨ 97.

### Average consumption

Display of average consumption. The measurement can be reset at any time and starts with a default value.

To reset, press the **SET/CLR** button for a few seconds.

### Instantaneous consumption

Display of the instantaneous consumption.

### Average speed

Display of average speed. The measurement can be reset at any time.

To reset, press the **SET/CLR** button for a few seconds.

### Digital speed

Digital display of the instantaneous speed.

### Traffic sign assistant

Indicates detected traffic signs for the current route section ⇨ 176.

### Route guidance

Additionally to the navigation information in the Colour-Info-Display, route guidance is displayed in the Driver Information Centre.

## Vehicle personalisation

The vehicle's behaviour can be personalised via changing the settings in the Info-Display.

Some of the personal settings for different drivers can be memorised individually for each vehicle key. Memorised settings ⇨ 22.

Depending on vehicle equipment and country-specific regulations some of the functions described below might not be available.

Some functions are only displayed or active when the engine is running.

## Personal settings in the Graphic-Info-Display

Press the **CONFIG** button. The menu **Settings** is displayed.

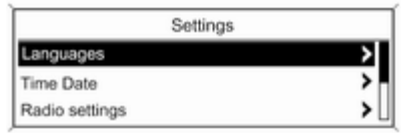


The following settings can be selected by turning and pushing the multifunction knob:

- **Sport mode settings**
- **Languages**
- **Time Date**
- **Radio settings**
- **Phone settings**
- **Vehicle settings**

In the corresponding submenus the following settings can be changed:

**Sport mode settings**
The driver can select the functions which will be activated in Sport mode ⇨ 154.

- **Sport suspension**: Damping becomes harder.
- **Sport powertrain performance**: Accelerator pedal and gear change characteristics become more responsive.
- **Sport steering**: Steering support is reduced.
- **Sport All-Wheel-Drive**: Engine torque is distributed to a greater extent to the rear axle.
- **Swap backlight colour main instr.**: Change of instrument illumination colour.

**Languages**
Selection of the desired language.

**Time Date**
See Clock ⇨ 84.

**Radio settings**
See Infotainment system manual.

**Phone settings**
See Infotainment system manual.

**Vehicle settings**

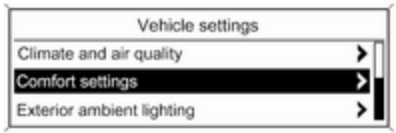


- **Climate and air quality**

  **Auto fan speed**: Modifies the fan regulation.

  **Temperature zone at start**: Changes between single zone or dual zone temperature setting.

  **Climate control mode**: Activates or deactivates cooling or select previous settings.

  **Auto demist**: Supports windscreen dehumidification by automatically selecting the necessary settings and auto air conditioning mode.

  **Auto rear demist**: Activates automatically the rear heated window.

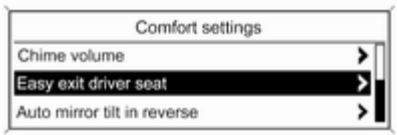


20327

- **Comfort settings**

  **Chime volume**: Changes the volume of warning chimes.

  **Easy exit driver seat**: Activates or deactivates easy exit function of the power seat.

  **Auto mirror tilt in reverse**: Activates or deactivates the parking assist function of the exterior mirror on the passenger side.

  **Comf. closing mirror fold**: Activate or deactivate folding of the exterior mirrors with remote control.

  **Personalization by driver**: Activates or deactivates the personalisation function.

  **Rear auto wipe in reverse**: Activates or deactivates automatically switching on of the rear window wiper when reverse gear is engaged.

- **Park assist / Collision detection**

  **Park assist**: Activates or deactivates the ultrasonic parking assist.

  **Auto collision preparation**: Changes or activates/deactivates settings for adaptive cruise control, forward collision alert and collision imminent braking system.

- **Exterior ambient lighting**

  **Duration upon exit of vehicle**: Activates or deactivates and changes the duration of exit lighting.

**Exterior lighting by unlocking**: Activates or deactivates the welcome lighting.

- **Power door locks**

  **Auto door lock**: Activates or deactivates the automatic door unlocking function after switching off ignition. Activates or deactivates the automatic door locking function after driving off.

  **Stop door lock if door open**: Activates or deactivates the automatic door locking function while a door is open.

  **Delayed door lock**: Activates or deactivates the delayed door locking function.

- **Remote locking, unlocking, starting**

  **Remote unlock feedback**: Activates or deactivates the hazard warning flasher feedback whilst unlocking.

  **Remote door unlock**: Changes the configuration to unlock only the driver's door or the whole vehicle whilst unlocking.

  **Auto relock doors**: Activates or deactivates the automatic relock function after unlocking without opening the vehicle.

- **Restore factory settings**

  **Restore factory settings**: Resets all settings to the default settings.

## Personal settings in the Colour-Info-Display

Press the **CONFIG** button. The menu **Settings** is displayed.

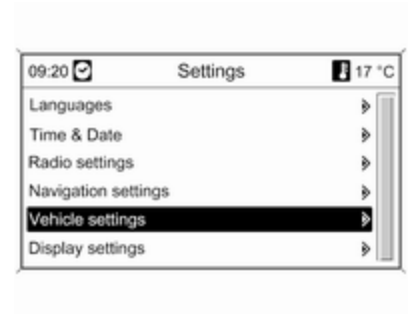


The following settings can be selected by turning and pushing the multifunction knob:

- **Sport mode settings**
- **Languages**
- **Time & Date**
- **Radio settings**
- **Phone settings**
- **Navigation settings**
- **Vehicle settings**
- **Display settings**

In the corresponding submenus the following settings can be changed:

**Sport mode settings**
The driver can select the functions which will be activated in Sport mode ⇨ 154.

- **Sport suspension**: Damping becomes harder.
- **Sport powertrain performance**: Accelerator pedal and gear change characteristics become more responsive.
- **Sport steering**: Steering support is reduced.
- **Sport All-Wheel-Drive**: Engine torque is distributed to a greater extent to the rear axle.
- **Swap backlight colour main instr.**: Change of instrument illumination colour.

**Languages**
Selection of the desired language.

**Time & Date**
See Clock ⇨ 84.

**Radio settings**
See Infotainment system manual.

**Phone settings**
See Infotainment system manual.

**Navigation settings**
See Infotainment system manual.

**Vehicle settings**

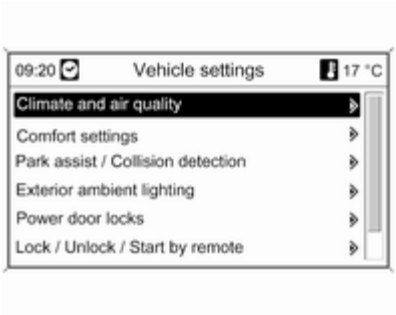


- **Climate and air quality**

  **Auto fan speed**: Modifies the fan regulation.

  **Temperature zone at start**: Changes between single zone or dual zone temperature setting.

  **Climate control mode**: Activates or deactivates cooling or select previous settings.

  **Auto demist**: Supports windscreen dehumidification by automatically selecting the necessary settings and auto air conditioning mode.

  **Auto rear demist**: Activates automatically the rear heated window.

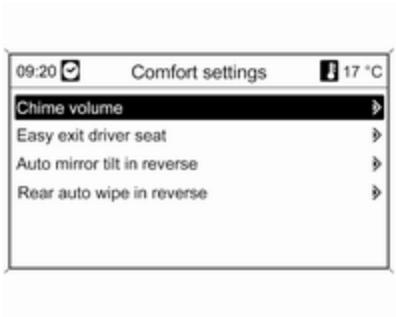


- **Comfort settings**

  **Chime volume**: Changes the volume of warning chimes.

  **Easy exit driver seat**: Activates or deactivates easy exit function of the

power seat. For recall of driving position, **Personalization by remote control** must be activated.

**Auto mirror tilt in reverse**: Activates or deactivates the parking assist function of the exterior mirror on the passenger side.

**Comf. closing mirror fold**: Activates or deactivates the automatic mirror folding function after locking the vehicle.

**Rear auto wipe in reverse**: Activates or deactivates automatically switching on of the rear window wiper when reverse gear is engaged.

- **Park assist / Collision detection**

  **Park assist**: Activates or deactivates the ultrasonic parking assist.

  **Auto collision preparation**: Changes or activates/deactivates settings for adaptive cruise control, forward collision alert and collision imminent braking system.

- **Exterior ambient lighting**

  **Duration upon exit of vehicle**: Activates or deactivates and changes the duration of exit lighting.

  **Exterior lighting by unlocking**: Activates or deactivates the welcome lighting.

- **Power door locks**

  **Auto door lock**: Activates or deactivates the automatic door unlocking function after switching off ignition. Activates or deactivates the automatic door locking function after driving off.

  **Prevent doorlock while door open**: Activates or deactivates the automatic door locking function while a door is open.

  **Delayed door lock**: Activates or deactivates the delayed door locking function.

- **Lock / Unlock / Start by remote**

  **Remote unlock feedback**: Activates or deactivates the hazard warning flasher feedback whilst unlocking.

  **Remote door unlock**: Changes the configuration to unlock only the driver's door or the whole vehicle whilst unlocking.

  **Auto relock doors**: Activates or deactivates the automatic relock function after unlocking without opening the vehicle.

  **Personalization by remote control**: Activates or deactivates the recall of memorised settings for power seat adjustment and exterior mirrors.

- **Restore factory settings**

  **Restore factory settings**: Resets all settings to the default settings.

**Display settings**

Selectable display settings:

- **Day mode**: Optimisation for daylight conditions.
- **Night mode**: Optimisation for darkness.
- **Automatic mode**: The display changes mode when the vehicle lights are switched on/off.

# Lighting

Exterior lighting ..... 118
Interior lighting ..... 125
Lighting features ..... 126

# Exterior lighting

## Light switch

Turn light switch:

AUTO = automatic light control: exterior lighting is switched on and off automatically depending on external lighting conditions.

⏻ = activation or deactivation of the automatic light control. Switch turns back to AUTO.

≣D = sidelights

≣D = low beam

In the Driver Information Centre with Uplevel-Display or Uplevel-Combi-Display, the current status of the automatic light control is displayed.

When switching on the ignition, automatic light control is active.

Control indicator ≣D ⇨ 97.

### Tail lights

Tail lights are illuminated together with low/high beam and sidelights.

#### Tail lights on Sports Tourer

Additional tail light assemblies, existing of tail lights and hazard warning flasher lights, are located in the tailgate frame. They are illuminated when the tailgate is open. Additional tail lights are only intended as position lights when the tailgate is open and are not to be used when driving.

# Automatic light control

## Automatic light control function

When the automatic light control function is switched on and the engine is running, the system switches between daytime running light and low/high beam automatically depending on the lighting conditions and information given by the rain sensor system.

### Daytime running light

Daytime running light increases visibility of the vehicle during daylight.

### Automatic low beam activation

During poor lighting conditions low beam is switched on.

Furthermore low beam is switched on if the windscreen wipers have been activated for several wipes.

### Tunnel detection

When a tunnel is entered low beam is switched on without delay.

Adaptive forward lighting ⇨ 121.

# High beam

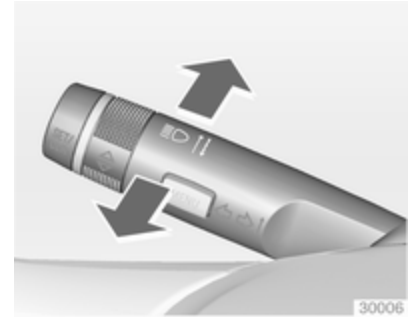


To switch from low to high beam, push lever.

To switch to low beam, push lever again or pull.

# Headlight flash

To activate the headlight flash, pull lever.

# Headlight range adjustment

## Manual headlight range adjustment

To adapt headlight range to the vehicle load to prevent dazzling: turn thumb wheel to required position.

0 = front seats occupied
1 = all seats occupied
2 = all seats occupied and load compartment laden
3 = driver's seat occupied and load compartment laden.

Dynamic automatic headlight levelling ⇨ 121.

# Headlights when driving abroad

The asymmetrical headlight beam extends visibility at the edge of the road at the passenger side.

However, when driving in countries where traffic drives on the opposite side of the road, adjust the headlights to prevent dazzling of oncoming traffic.

## Vehicles with halogen headlight system

Have the headlights adjusted by a workshop.

## Vehicles with Xenon headlight system

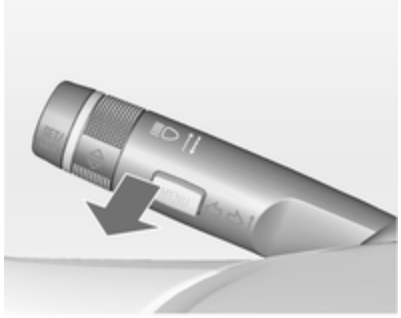

1. Turn key to position **0**.
2. Pull turn signal lever and hold.
3. Switch on ignition.
4. After approx. 5 seconds the control indicator starts flashing and an acoustic signal sounds.

Control indicator ⇨ 97.

Every time the ignition is switched on, flashes as a reminder for approx. 4 seconds.

For deactivation operate the same procedure as described above. ⚠ will not flash when function is deactivated.

## Adaptive forward lighting

The Adaptive forward lighting functions are only available with Bi-Xenon headlights. Light range, light distribution and intensity of light are variably triggered depending on the light conditions, weather and road type.

With the light switch in position **AUTO** all lighting functions are available.

The following functions are available also with light switch in position ≡D:

- Dynamic curve lighting
- Corner lighting
- Reversing function
- Dynamic automatic headlight levelling

### Playstreet lighting

Activated automatically at low speed up to approx. 30 km/h. The light beam is turned at an angle of 8° to the roadside.

### Town lighting

Activated automatically at a speed range between approx. 40 and 55 km/h and when street lights are detected by the light sensor. The light range is reduced by an extended light distribution.

### Country lighting

Activated automatically at a speed range between approx. 55 and 115 km/h. The beam of light and the brightness is different between the left and the right side.

### Motorway lighting

Activated automatically at a speed above approx. 115 km/h and minimal steering movements. It switches on after a delay or immediately when the vehicle is powerfully accelerated. The light beam is longer and brighter.

### Adverse weather lighting

Activated automatically up to a speed of approx. 70 km/h, when the rain sensor recognizes condensation or the wiper operates continuously. The range, distribution and light intensity is regulated variably depending on visibility.

### Dynamic curve lighting

The light beam pivots based on steering wheel angle and speed, improving lighting in curves.

Control indicator ⚠ ⇨ 97.

## Corner lighting

On tight bends or when turning off, depending on the steering angle or the turn signal light, an additional left or right reflector is switched on which illuminates the road at a right angle to the direction of travel. It is activated up to a speed of 40 km/h.

Control indicator ⇨ 97.

## Reversing function

If the headlights are on and reverse gear is engaged, both corner lights are switched on. They remain illuminated for 20 seconds after disengaging reverse gear or until driving faster than 7 km/h in a forward gear.

## High Beam Assist

This feature allows high beam to function as the main driving light at night and when vehicle speed is faster than 40 km/h.

It switches to low beam when:

- the camera in the windscreen detects the lights of oncoming or preceding vehicles
- the vehicle speed is slower than 20 km/h
- it is foggy or snowy
- driving in urban areas

If there are no restrictions detected, the system switches back to high beam.

### Activation

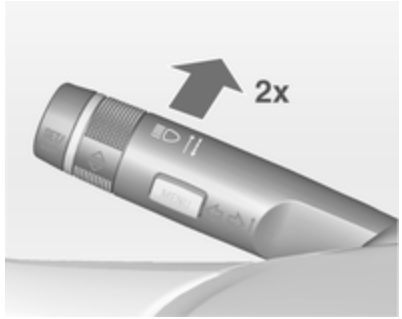


The high beam assist is activated by pushing the indicator lever twice with a speed above 40 km/h.

The green control indicator illuminates continuously when the assist is activated, the blue one illuminates when high beam is on.

Control indicator ⇨ 97.

### Deactivation

Push indicator lever once. It is also deactivated when front fog lights are switched on.

If a headlight flash is activated when the high beam is on, the high beam assist will be deactivated.

If a headlight flash is activated when the high beam is off, the high beam assist will stay activated.

High beam assist remains in the last setting when the ignition is switched on.

### Dynamic automatic headlight levelling

To prevent oncoming traffic from dazzle, headlight levelling is automatically adjusted based on inclination information measured by front and rear axle, acceleration or deceleration and vehicle speed.

### Fault in Adaptive forward lighting system

When the system detects a failure in the Adaptive forward lighting system, the system moves to a preset position to avoid dazzling of oncoming traffic. If this is not possible, the affected headlight will be automatically switched off. In any case, one headlight will stay on. A warning is displayed in the Driver Information Centre.

## Hazard warning flashers

Operated with the ⚠ button.

In the event of an accident with airbag deployment the hazard warning flashers are activated automatically.

## Turn and lane-change signals

lever up = right turn signal
lever down = left turn signal

If the lever is moved past the resistance point, the turn signal is switched on constantly. When the steering wheel moves back, the turn signal is automatically deactivated.

For three flashes, e.g. when changing lanes, press the lever until resistance is felt and then release.

With a trailer connected, turn signal flashes six times when pressing the lever until resistance is felt and then releasing.

Move the lever to the resistance point and hold for longer indication.

Switch the turn signal off manually by moving the lever to its original position.

## Front fog lights

Operated with the button.

Light switch in position **AUTO**: switching on front fog lights will switch headlights on automatically.

## Rear fog lights

Operated with the button.

Light switch in position **AUTO**: switching on rear fog light will switch headlights on automatically.

Light switch in position : rear fog light can only be switched on with front fog lights.

The vehicle rear fog light is deactivated when towing.

## Parking lights

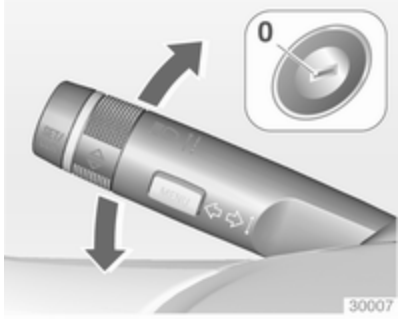


When the vehicle is parked, the parking lights on one side can be activated:

1. Switch off ignition.
2. Move turn signal lever all the way up (right parking lights) or down (left parking lights).

Confirmed by a signal and the corresponding turn signal control indicator.

## Reversing lights

The reversing light comes on when the ignition is on and reverse gear is selected.

## Misted light covers

The inside of the light housing may mist up briefly in poor, wet and cold weather conditions, in heavy rain or after washing. The mist disappears quickly by itself; to help switch on the headlights.

# Interior lighting

## Instrument panel illumination control

Brightness of the following lights can be adjusted when the exterior lights are on:

- Instrument panel illumination
- Info-Display
- Illuminated switches and operation elements

Turn thumb wheel ⚙ and hold until the desired brightness is obtained.

On vehicles with light sensor, the brightness can only be adjusted when the exterior lights are on and the light sensor detects night conditions.

## Interior lights

During entry and exit of the vehicle, the front and rear courtesy lights automatically switch on and then off after a delay.

**Note**
In the event of an accident with airbag deployment the courtesy lights are turned on automatically.

### Front courtesy light

Operate rocker switch:

| | | |
|---|---|---|
| | = | automatic switching on and off. |
| press | = | on. |
| press | = | off. |

### Rear courtesy lights

Illuminate in conjunction with the front courtesy light depending on rocker switch position.

## Reading lights

Operated with and buttons in front and rear courtesy lights.

## Sunvisor lights

Illuminates when the cover is opened.

# Lighting features

## Centre console lighting

Spotlight incorporated in the interior lighting comes on when headlights are switched on.

## Entry lighting

### Welcome lighting

Headlights, tail lights, number plate lights, instrument panel light, interior lights and puddle lights are switched on for a short time by unlocking the vehicle with the radio remote control. This function works only in the dark and facilitates locating the vehicle.

The lighting switches off immediately when the ignition key is turned to position 1. Starting off ⇨ 18.

Activation or deactivation of this function can be changed in the menu **Settings** in the Info-Display. Vehicle personalisation ⇨ 112.

The settings can be saved for the key being used ⇨ 22.

The following lights will additionally switch on when the driver's door is opened:

- All switches
- Driver Information Centre
- Door pocket lights

## Exit lighting

The following lights switch on if the key is removed from the ignition switch:

- Interior lights
- Instrument panel light
- Puddle lights

They will switch off automatically after a delay. This function works only in the dark. Theatre lighting is activated if the driver's door is opened during this time.

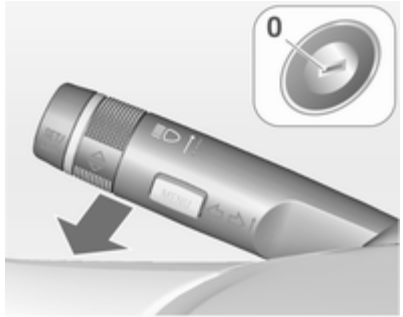


Headlights, tail lights and number plate lights illuminate the surrounding area for an adjustable time after leaving the vehicle.

### Switching on

1. Switch off ignition.
2. Remove ignition key.
3. Open driver's door.
4. Pull turn signal lever.
5. Close driver's door.

If the driver's door is not closed the lights switch off after two minutes.

Exit lighting is switched off immediately if the turn signal lever is pulled while the driver's door is open.

Activation, deactivation and duration of this function can be changed in the menu **Settings** in the Info-Display. Vehicle personalisation ⇨ 112.

The settings can be saved for the key being used ⇨ 22.

## Battery discharge protection

### Battery state of charge function

The function guarantees longest battery life via a generator with controllable power output and optimised power distribution.

To prevent discharge of the battery when driving, following systems are reduced automatically in two stages and finally switched off:

- Auxiliary heater
- Heated rear window and mirrors
- Heated seats
- Fan

In the second stage a message which confirms the activation of the battery discharge protection will be displayed in the Driver Information Centre.

## Switching off electric lights

To prevent discharge of the battery when the ignition is switched off, some interior lights are switched off automatically after some time.

# Climate control

Climate control systems ..... 129
Air vents ..... 136
Maintenance ..... 137

# Climate control systems

## Heating and ventilation system

Controls for:

- Temperature
- Air distribution
- Fan speed

Heated rear window ⇨ 38.

### Temperature

red = warm
blue = cold

Heating will not be fully effective until the engine has reached normal operating temperature.

### Air distribution

= to windscreen and front door windows
= to head area via adjustable air vents
= to foot well

All combinations are possible.

### Fan speed

Adjust the air flow by switching the fan ⌘ to the desired speed.

# Air conditioning system

In addition to the heating and ventilation system, the air conditioning system has:

- = cooling
- = air recirculation
- = demisting and defrosting

Heated seats ⇨ 49, Ventilated seats ⇨ 49.

## Cooling

Operated with the button and is functional only when the engine and fan are running.

The air conditioning system cools and dehumidifies (dries) as soon as the outside temperature is slightly above freezing point. Therefore condensation may form and drip from under the vehicle.

If no cooling or drying is required, switch the cooling system off to save fuel.

## Air recirculation system

Operated with the button.

**⚠Warning**

The exchange of fresh air is reduced in air recirculation mode. In operation without cooling the air humidity increases, so the windows may mist up from inside. The quality of the passenger compartment air deteriorates, which may cause the vehicle occupants to feel drowsy.

In warm and very humid ambient air conditions, the windscreen might mist up from outside, when cold air is directed to it. If windscreen mists up from outside, activate windscreen wiper and deactivate .

Air distribution to : Air recirculation is deactivated.

## Maximum cooling

Briefly open the windows so that hot air can disperse quickly.

- Cooling on.
- Air circulation system on.
- Press air distribution switch .
- Set temperature control to coldest level.
- Set fan speed to highest level.
- Open all vents.

## Demisting and defrosting the windows

- Press button : fan automatically switches to higher speed, the air distribution is directed towards the windscreen,
- Switch cooling on.
- Set temperature control to warmest level.
- Switch on heated rear window .
- Open side air vents as required and direct them towards the door windows.

**Note**

If the button is pressed while the engine is running, an Autostop will be inhibited until the button is pressed again.

If the button is pressed while the engine is in an Autostop, the engine will restart automatically.

# Electronic climate control system

Two versions of climate control: single zone or dual zone temperature setting. The dual zone climate control allows different climatisation temperatures for driver and front passenger side.

**Single zone controls:**

- Temperature
- Air distribution
- Fan speed

| | | |
|---|---|---|
| | = | cooling |
| AUTO | = | automatic mode |
| | = | air recirculation |
| | = | demisting and defrosting |

**Dual zone controls:**

- Temperature on driver side
- Air distribution
- Fan speed
- Temperature on front passenger side

❄ = cooling
AUTO = automatic mode
= air recirculation
= demisting and defrosting

Heated rear window ⇨ 38.

Heated seats ⇨ 49.

Heated steering wheel ⇨ 80

The preselected temperature is automatically regulated. In the automatic mode the fan speed and air distribution automatically regulate the air flow.

The system can be manually adapted via the use of air distribution and air flow controls.

Data is shown on the climate display.

It may appear differently depending on single zone or dual zone climate control.

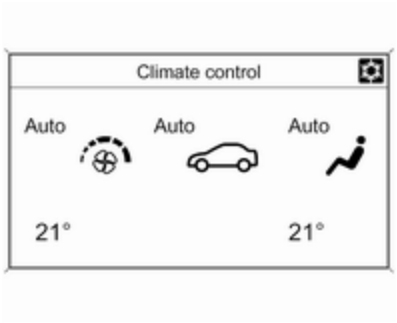


Each change of settings is shown in the Info-Display for a few seconds.

Climate control system settings are saved in the key used to lock the vehicle.

The electronic climate control system is only fully operational when the engine is running.

## Automatic mode AUTO

Basic setting for maximum comfort:

- Press **AUTO** button, the air conditioning is activated automatically. Air distribution and fan speed are regulated automatically.
- Open all air vents.
- Single zone climate control: Set preselected temperature using left rotary knob.
- Recommended comfort setting is 22 °C.

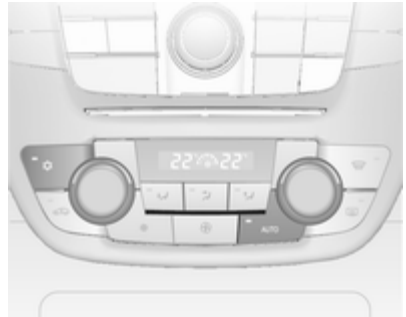

Dual zone climate control: Set the preselected temperatures for driver and front passenger using the left and right rotary knob.

The fan speed regulation in automatic mode can be changed in the menu **Settings**.

Vehicle personalisation ⇨ 112.

All air vents are actuated automatically in automatic mode. The air vents should therefore always be open.

## Temperature preselection

Set temperatures to the desired value.

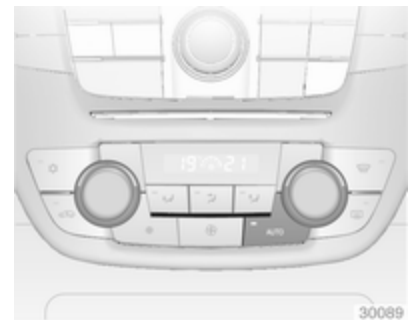

If the minimum temperature is set, the climate control system runs at maximum cooling, if cooling ❄ is switched on.

If the maximum temperature is set, the climate control system runs at maximum heating.

Dual zone climate control: for a common temperature setting use the menu **Settings**.

**Note**
For climate comfort reasons an Autostop can be inhibited or the engine will restart automatically, when cooling is switched on.

Stop-start system ⇨ 140.

## Demisting and defrosting the windows

- Press button .
- Press cooling button ❄.
- Temperature and air distribution are set automatically and the fan runs at high speed.
- Switch on heated rear window .
- To return to previous mode: press button , to return to automatic mode: press button **AUTO**.

Setting of automatic rear window heating can be changed in the menu **Settings** in the Info-Display. Vehicle personalisation ⇨ 112.

**Note**
If the  button is pressed while the engine is running, an Autostop will be inhibited until the  button is pressed again.

If the  button is pressed while the engine is in an Autostop, the engine will restart automatically.

## Manual settings

Climate control system settings can be changed by activating the buttons and rotary knobs as follows.
Changing a setting will deactivate the automatic mode.

### Fan speed ⌘ on single zone climate control

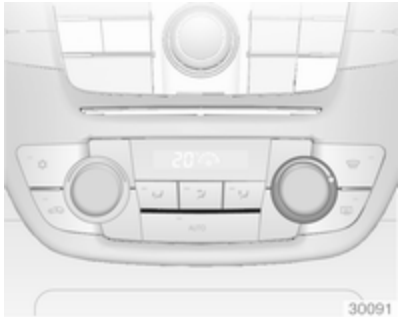


Turn right rotary knob. The selected fan speed is indicated by the number of segments in the display.

If the fan is switched off the air conditioning is also deactivated.

To return to automatic mode: Press **AUTO** button.

### Fan speed ⌘ on dual zone climate control

Press left button ⌘ to decrease or right button ⌘ to increase fan speed. The fan speed is indicated by the number of segments in the display.

Pressing the left button for longer, fan and cooling are switched off.

Pressing the right button for longer: the fan runs at maximum speed.

To return to automatic mode: Press **AUTO** button.

## Air distribution

Press appropriate button for desired adjustment. Activation is indicated by the LED in the button.

- = to windscreen and front door windows.
- = to head area via adjustable air vents.
- = to foot well.

Combinations are possible.

Return to automatic air distribution: Deactivate corresponding setting or press button **AUTO**.

## Cooling

Activate or deactivate with the button.

The air conditioning system cools and dehumidifies (dries) when outside temperature is above a specific level. Therefore condensation may form and drip from under the vehicle.

If no cooling or drying is required, switch the cooling system off to save fuel. When the cooling system is switched off, no engine restart will be requested by the climate control system during an Autostop. Exception: defrost system is activated and outside temperature above 0° C requests a restart.

## Automatic air recirculation on dual zone climate control

The automatic air recirculation system has an air humidity sensor which switches automatically to external air if internal air humidity is too high.

## Manual air recirculation mode

Operated with the button.

**⚠Warning**

The exchange of fresh air is reduced in air recirculation mode. In operation without cooling the air humidity increases, so the windows may mist up from inside. The quality of the passenger compartment air deteriorates, which may cause the vehicle occupants to feel drowsy.

In warm and very humid ambient air conditions, the windscreen might mist up from outside, when cold air is directed towards it. If windscreen mists up from outside, activate windscreen wiper and deactivate ⇆.

Press button once to activate the manual air recirculation mode.

Activation is indicated by the LED in the button.

### Basic settings

Some settings can be changed in the menu **Settings** in the Info-Display. Vehicle personalisation ⇨ 112.

## Auxiliary heater

### Air heater

Quickheat is an electric auxiliary air heater which automatically warms up the passenger compartment more quickly.

# Air vents

## Adjustable air vents

To open the vent, turn the adjuster wheel to I. Adjust the air amount at the vent outlet by turning the adjuster wheel.

Direct the flow of air by tilting and swivelling the slats.

To close the vent, turn the adjuster wheel to **0**.

**⚠Warning**

Do not attach any objects to the slats of the air vents. Risk of damage and injury in case of an accident.

## Fixed air vents

Additional air vents are located beneath the windscreen and door windows and in the foot wells.

# Maintenance

## Air intake

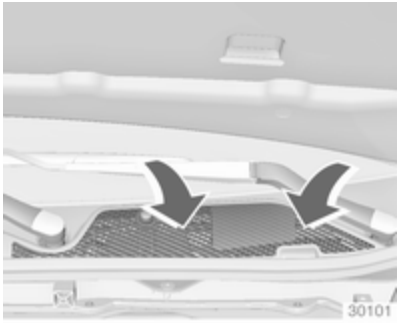


The air intake in front of the windscreen in the engine compartment must be kept clear to allow air intake. Remove any leaves, dirt or snow.

## Pollen filter

### Cabin air filtration

A particle filter cleans the cabin air from dust, soot, pollen and spores.

### Active carbon filter

In addition to the particle filter the active carbon filter reduces odours.

Filter replacement has to be done during regular service.

## Air conditioning regular operation

In order to ensure continuously efficient performance, cooling must be operated for a few minutes once a month, irrespective of the weather and time of year. Operation with cooling is not possible when outside temperature is too low.

## Service

For optimal cooling performance, it is recommended to annually check the climate control system, starting three years after initial vehicle registration, including:

- Functionality and pressure test
- Heating functionality
- Leakage check
- Check of drive belts
- Cleaning of condenser and evaporator drainage
- Performance check

# Driving and operating

Driving hints ..... 138
Starting and operating ..... 138
Engine exhaust ..... 143
Automatic transmission ..... 145
Manual transmission ..... 149
Drive systems ..... 150
Brakes ..... 150
Ride control systems ..... 153
Driver assistance systems ..... 157
Fuel ..... 180
Towing ..... 187

# Driving hints

## Control of the vehicle

### Never coast with engine not running (except during Autostop)

Many systems will not function in this situation (e.g. brake servo unit, power steering). Driving in this manner is a danger to yourself and others. All systems function during an Autostop, but there will be a controlled reduction in power steering assist and vehicle speed is reduced.

Stop-start system ⇨ 140.

### Pedals

To ensure the pedal travel is uninhibited, there must be no mats in the area of the pedals.

# Starting and operating

## New vehicle running-in

Do not brake unnecessarily hard for the first few journeys.

During the first drive, smoke may occur because of wax and oil evaporating off the exhaust system. Park the vehicle in the open for a while after the first drive and avoid inhaling the fumes.

During the running-in period fuel and engine oil consumption may be higher and the cleaning process of the diesel particle filter may take place more often.

Diesel particle filter ⇨ 143.

## Ignition switch positions

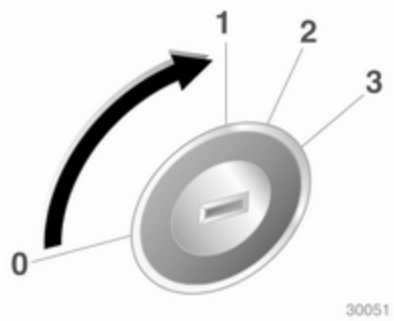


0 = Ignition off
1 = Steering wheel lock released, ignition off
2 = Ignition on, for diesel engine: preheating
3 = Starting

## Retained power off

The following electronic systems can work until the driver's door is opened or at the latest for 10 minutes after the ignition is switched off:

- Power windows
- Sunroof
- Power outlets

Power to the Infotainment system will continue to operate for 30 minutes or until the key is removed from the ignition switch, regardless of whether any door will be opened.

## Starting the engine

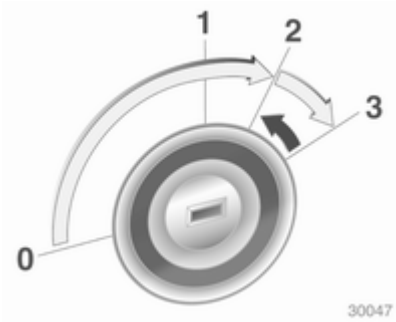


Manual transmission: operate clutch.

Automatic transmission: operate brake and move selector lever to **P** or **N**.

Do not operate accelerator pedal.

Diesel engine: turn the key to position **2** for preheating until control indicator extinguishes.

Turn key briefly to position **3** and release: an automatic procedure operates the starter with a short delay until the engine is running, see Automatic Starter Control.

Before restarting or to switch off the engine, turn key back to position **0**.

During an Autostop, the engine can be started by depressing the clutch pedal.

### Starting the vehicle at low temperatures

Starting the engine without additional heaters is possible down to -25 °C for diesel engines and -30 °C for petrol engines. Required is an engine oil with the correct viscosity, the correct fuel, performed services and a sufficiently charged battery. With temperatures below -30 °C the automatic transmission requires a warming phase of approx. 5 minutes. The selector lever must be in position **P**.

### Automatic Starter Control

This function controls the engine starting procedure. The driver does not have to hold the key in position **3**. Once applied, the system will go on starting automatically until the engine is running. Because of the checking procedure, the engine starts running after a short delay.

Possible reasons for a non-starting engine:

- Clutch pedal not operated (manual transmission)
- Brake pedal not operated or selector lever not in **P** or **N** (automatic transmission)
- Timeout occurred

### Turbo engine warm-up

Upon start-up, engine available torque may be limited for a short time, especially when the engine temperature is cold. The limitation is to allow the lubrication system to fully protect the engine.

## Overrun cut-off

The fuel supply is automatically cut off during overrun, i.e. when the vehicle is driven with a gear engaged but accelerator is released.

## Stop-start system

The stop-start system helps to save fuel and to reduce the exhaust emissions. When conditions allow, it switches off the engine as soon as the vehicle is at a low speed or at a standstill, e.g. at a traffic light or in a traffic jam. It starts the engine automatically as soon as the clutch is depressed. A battery sensor ensures that an Autostop is only performed if the battery is sufficiently charged for a restart.

### Activation

The stop-start system is available as soon as the engine is started, the vehicle starts-off and the conditions as stated below in this section are fulfilled.

## Deactivation

Deactivate the stop-start system manually by pressing the **eco** button. Deactivation is indicated by the LED in the button extinguishing.

## Autostop

If the vehicle is at a low speed or at a standstill, activate an Autostop as follows:

- Depress the clutch pedal
- set the lever in neutral
- release the clutch pedal

The engine will be switched off while the ignition stays on.

An Autostop is indicated by the needle at the **AUTOSTOP** position in the tachometer.

During an Autostop, the heating and brake performance will be maintained.

| Caution |
| --- |
| The steering assist can be reduced during an Autostop. |

### Conditions for an Autostop

The stop-start system checks if each of the following conditions is fulfilled.

- The stop-start system is not manually deactivated
- the bonnet is fully closed
- the driver's door is closed or the driver's seat belt is fastened
- the battery is sufficiently charged and in good condition
- the engine is warmed up
- the engine coolant temperature is not too high
- the engine exhaust temperature is not too high, e.g. after driving with high engine load
- the ambient temperature is above -5° C
- the climate control system allows an Autostop
- the brake vacuum is sufficient
- the self-cleaning function of the diesel particle filter is not active
- the vehicle was driven with walking speed since the last Autostop

Otherwise an Autostop will be inhibited.

Certain settings of the climate control system may inhibit an Autostop. See Climate control chapter for more details ⇨ 131.

Immediately after motorway driving an Autostop may be inhibited.

New vehicle running-in ⇨ 138.

### Battery discharge protection

To ensure reliable engine restarts, several battery discharge protection features are implemented as part of the stop-start system.

### Power saving measures

During an Autostop, several electrical features such as auxiliary electric heater or rear window heating are disabled or switched to a power saving mode. The fan speed of the climate control system is reduced to save power.

## Restart of the engine by the driver

Depress the clutch pedal to restart the engine.

The engine start is indicated by the needle at the idle speed position in the tachometer.

If the selector lever is shifted out of neutral before depressing the clutch first, control indicator illuminates or is shown as a symbol in the Driver Information Centre.

Control indicator ⇨ 93.

## Restart of the engine by the stop-start system

The selector lever has to be in neutral to enable an automatic restart.

If one of the following conditions occurs during an Autostop, the engine will be restarted automatically by the stop-start system:

- The stop-start system is manually deactivated
- the bonnet is opened
- the driver's seat belt is unfastened and the driver's door is opened
- the engine temperature is too low
- the charging level of the battery is below a defined level
- the brake vacuum is not sufficient
- the vehicle is driven with walking speed
- the climate control system requests an engine start
- the air conditioning is manually switched on

If the bonnet is not fully closed, a warning message is displayed in the Driver Information Centre.

If an electrical accessory, e.g. a portable CD player, is connected to the power outlet, a brief power drop during restart might be noticeable.

# Parking

- Do not park the vehicle on an easily ignitable surface. The high temperature of the exhaust system could ignite the surface.
- Always apply parking brake. Apply manual parking brake without pressing release button. Apply as firmly as possible on downhill or uphill slopes. Depress the foot brake at the same time to reduce operating force.

For vehicles with electrical parking brake pull switch Ⓟ for approx. one second.

- Switch off the engine and ignition. Turn the steering wheel until the steering wheel lock engages.
- If the vehicle is on a level surface or uphill slope, engage first gear or set the selector lever to **P** before switching off the ignition. On an uphill slope, turn the front wheels away from the kerb.

  If the vehicle is on a downhill slope, engage reverse gear or set the selector lever to **P** before switching off the ignition. Turn the front wheels towards the kerb.
- Lock the vehicle and activate the anti-theft alarm system.

**Note**
In the event of an accident with airbag deployment, the engine is turned off automatically if the vehicle comes to a standstill within a certain time.

# Engine exhaust

**⚠ Danger**

Engine exhaust gases contain poisonous carbon monoxide, which is colourless and odourless and could be fatal if inhaled.

If exhaust gases enter the interior of the vehicle, open the windows. Have the cause of the fault rectified by a workshop.

Avoid driving with an open load compartment, otherwise exhaust gases could enter the vehicle.

## Diesel particle filter

The diesel particle filter system filters harmful soot particles out of the exhaust gases. The system includes a self-cleaning function that runs automatically during driving without any notification. The filter is cleaned by periodically burning off the soot particles at high temperature. This process takes place automatically under set driving conditions and may take up to 25 minutes. Typically it needs between 7 and 12 minutes. Fuel consumption may be higher during this period. The emission of smells and smoke during this process is normal.

Under certain driving conditions, e.g. short distances, the system cannot clean itself automatically.

If the cleaning of the filter is required and if previous driving conditions did not enable automatic cleaning, it will be indicated by the control indicator ⛽ and **CodE 55** in the Driver Information Centre. In vehicles with

Uplevel-Display or Uplevel-Combi-Display a warning message appears in the display.

illuminates when diesel particle filter is full. Start cleaning process as soon as possible.

flashes and a warning chime sounds several times when diesel particle filter has reached the maximum filling level. Start cleaning process immediately to avoid damage to the engine.

### Cleaning process

To activate cleaning process, continue driving, keep engine speed above 2000 revolutions per minute. Shift down if necessary. Diesel particle filter cleaning is then started.

If illuminates additionally or a warning message appears in the Uplevel-Display or Uplevel-Combi-Display, cleaning is not possible, seek the assistance of a workshop.

**Caution**

If the cleaning process is interrupted, there is a risk of provoking severe engine damage.

Cleaning takes place quickest at high engine speeds and loads.

Do not switch off the engine until the cleaning process is complete. This is indicated by the extinguished control indicator .

## Catalytic converter

The catalytic converter reduces the amount of harmful substances in the exhaust gases.

**Caution**

Fuel grades other than those listed on pages ⇨ 180, ⇨ 244 could damage the catalytic converter or electronic components.

Unburnt petrol will overheat and damage the catalytic converter. Therefore avoid excessive use of the starter, running the fuel tank dry and starting the engine by pushing or towing.

In the event of misfiring, uneven engine running, a reduction in engine performance or other unusual problems, have the cause of the fault rectified by a workshop as soon as possible. In an emergency, driving can be continued for a short period, keeping vehicle speed and engine speed low.

# Automatic transmission

The automatic transmission permits automatic gearshifting (automatic mode) or manual gearshifting (manual mode).

## Transmission display

The mode or selected gear is shown in the transmission display.

## Selector lever

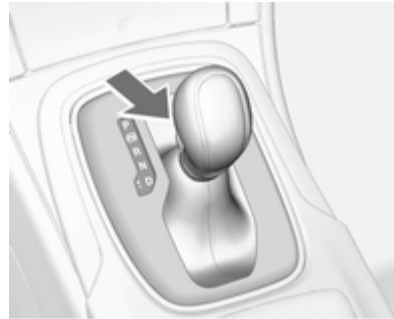

**P** = park position, wheels are locked, engage only when the vehicle is stationary and the parking brake is applied
**R** = reverse gear, engage only when vehicle is stationary
**N** = neutral
**D** = automatic mode with all gears

The selector lever is locked in **P** and can only be moved when the ignition is on and the brake pedal is applied.

Without applied brake pedal the control indicator illuminates.

If the selector lever is not in **P** when the ignition is switched off, control indicator and **P** flash.

To engage **P** or **R**, press the release button.

The engine can only be started with lever in position **P** or **N**. When position **N** is selected, press brake pedal or apply parking brake before starting.

Do not operate accelerator pedal while engaging a gear. Never depress the accelerator pedal and brake pedal at the same time.

When a gear is engaged, the vehicle slowly begins to creep when the brake is released.

### Engine braking

To utilise the engine braking effect, select a lower gear in good time when driving downhill, see manual mode.

### Rocking the vehicle

Rocking the vehicle is only permissible if the vehicle is stuck in sand, mud or snow. Move the selector lever between **D** and **R** in a repeat pattern. Do not race the engine and avoid sudden acceleration.

### Parking

Apply the parking brake and engage **P**.

The ignition key can only be removed when the selector lever is in position **P**.

## Manual mode

### Selector lever

Move selector lever out of position **D** towards the left and then forwards or backwards.

**+** = Shift to a higher gear.

**–** = Shift to a lower gear.

### Steering wheel shifter

Move selector lever out of position **D** towards the left.

**M** or the number of the selected gear is indicated in the transmission display.

Use steering wheel shifter to select gears manually.

**+** = right shifter, pull for up shifting.

**–** = left shifter, pull for down shifting.

### General

If a higher gear is selected when vehicle speed is too low, or a lower gear when vehicle speed is too high, the shift is not executed. This can cause a message in the Driver Information Centre.

In manual mode no automatic shifting to a higher gear takes place at high engine revolutions.

## Electronic driving programmes

- Following a cold start, the operating temperature programme increases engine speed to quickly bring the catalytic converter to the required temperature.
- The automatic neutral shift function automatically shifts to idling when the vehicle is stopped with a forward gear engaged and the brake pedal is pressed.
- When SPORT mode is engaged, the vehicle shifts at higher engine speeds (unless cruise control is on). SPORT mode ⇨ 154.
- Special programmes automatically adapt the shifting points when driving up inclines or down hills.
- When starting off in snowy or icy conditions or on other slippery surfaces, the electronic transmission control selects a higher gear automatically.

### Kickdown

If the accelerator pedal is pressed down completely in automatic mode, the transmission shifts to a lower gear depending on engine speed.

### Overheat protection

In the event of transmission-overheating due to high outside temperatures or sporty driving style, the torque and the maximum speed of the engine can be temporarily reduced.

## Fault

In the event of a fault, illuminates. Additionally a code number or a vehicle message is displayed in the Driver Information Centre. Vehicle messages ⇨ 106.

The transmission no longer shifts automatically. Continued travel is possible with manual shifting.

Only the highest gear is available. Depending on the fault, 2nd gear may also be available in manual mode. Shift only when vehicle is stationary.

Have the cause of the fault remedied by a workshop.

## Interruption of power supply

In the event of an interruption of power supply, the selector lever cannot be moved out of the **P** position. The ignition key cannot be removed from the ignition switch.

If the battery is discharged, start the vehicle using jump leads ⇨ 228.

If the battery is not the cause of the fault, release the selector lever and remove the ignition key from the ignition switch.

## Release selector lever

1. Apply parking brake.

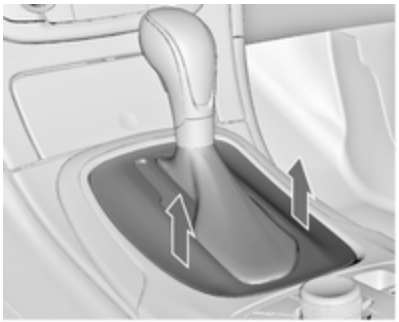

2. Release selector lever trim from centre console at rear, fold upwards and rotate to the left.

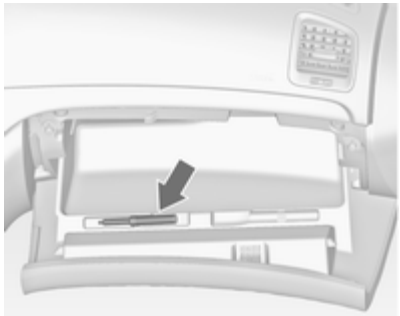

3. Take the special tool from the inside of the glovebox cover.

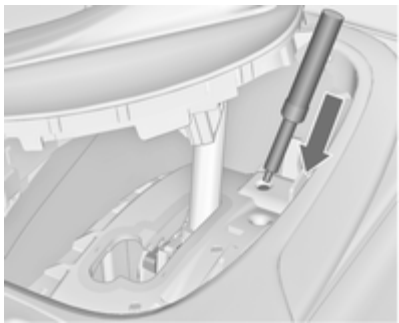

4. Insert it into the opening as far as it will go and move the selector lever out of **P** or **N**. If **P** or **N** is engaged again, the selector lever will be locked in position again. Have the cause of the power supply interruption remedied by a workshop.
5. Mount the selector lever trim on the centre console and refit.

## Remove ignition key from ignition switch

1. Take the special tool from the inside of the glovebox cover.

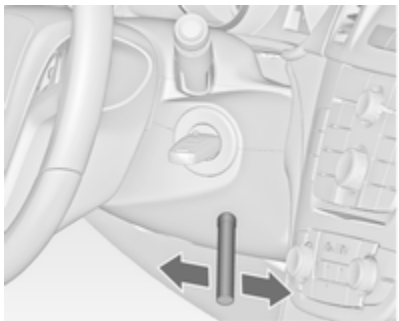

2. Insert the special tool into the opening below the ignition switch as far as it will go and swivel it slightly.

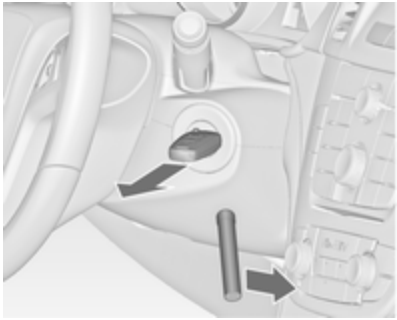

3. Turn special tool to the front and remove key from the ignition switch. Several attempts may be required to successfully remove the key.

# Manual transmission

To engage reverse, with the vehicle stationary press the release button on the selector lever and engage the gear.

If the gear does not engage, set the lever to neutral, release the clutch pedal and depress again; then repeat gear selection.

Do not grind the clutch unnecessarily.

When operating, depress the clutch pedal completely. Do not use the pedal as a foot rest.

| Caution |
| --- |
| It is not advisable to drive with the hand resting on the selector lever. |

# Drive systems

## All-wheel drive

The All-wheel drive system enhances driving characteristics and stability, and helps to achieve the best possible driveability regardless of ground surface. The system is always active and cannot be deactivated.

The torque is distributed steplessly between the wheels of the front and rear axle, depending on the driving conditions. Additionally the torque between the rear wheels is distributed depending on the surface.

For optimum system performance, the vehicle's tyres should not have varying degrees of wear.

If a service message is displayed in the Driver Information Centre, the system may have limited functionality (or be completely disabled in some cases, i.e. the vehicle switches to Front-wheel drive). Seek the assistance of a workshop.

Towing the vehicle ⇨ 230.

# Brakes

The brake system comprises two independent brake circuits.

If a brake circuit fails, the vehicle can still be braked using the other brake circuit. However, braking effect is achieved only when the brake pedal is depressed firmly. Considerably more force is needed for this. The braking distance is extended. Seek the assistance of a workshop before continuing your journey.

When the engine is not running, the support of the brake servo unit disappears once the brake pedal has been depressed once or twice. Braking effect is not reduced, but braking requires significantly greater force. It is especially important to bear this in mind when being towed.

Control indicator ⇨ 93.

## Antilock brake system

Antilock brake system (ABS) prevents the wheels from locking.

ABS starts to regulate brake pressure as soon as a wheel shows a tendency to lock. The vehicle remains steerable, even during hard braking.

ABS control is made apparent through a pulse in the brake pedal and the noise of the regulation process.

For optimum braking, keep the brake pedal fully depressed throughout the braking process, despite the fact that the pedal is pulsating. Do not reduce the pressure on the pedal.

After starting off, the system performs a self-test which may be audible.

Control indicator ⇨ 94.

### Adaptive brake light

During full braking, all three brake lights flash for the duration of ABS control.

### Fault

**⚠Warning**

If there is a fault in the ABS, the wheels may be liable to lock due to braking that is heavier than normal. The advantages of ABS are no longer available. During hard braking, the vehicle can no longer be steered and may swerve.

Have the cause of the fault remedied by a workshop.

## Parking brake

### Manual parking brake

Always apply parking brake firmly without operating the release button, and apply as firmly as possible on a downhill or uphill slope.

To release the parking brake, pull the lever up slightly, press the release button and fully lower the lever.

To reduce the operating forces of the parking brake, depress the foot brake at the same time.

Control indicator ⓘ ⇨ 93.

### Electrical parking brake

**Applying when vehicle is stationary**

Pull switch Ⓟ for approx. one second, the electrical parking brake operates automatically with an adequate force. For maximum force, e.g. parking with trailer or on inclines, pull switch Ⓟ twice.

The electrical parking brake is applied when control indicator Ⓟ lights up ⇨ 94.

The electrical parking brake can always be activated, even if the ignition is off.

Do not operate electrical parking brake system too often without engine running as this will discharge the battery.

Before leaving the vehicle, check the electrical parking brake status.

Control indicator Ⓟ ⇨ 94.

### Releasing

Switch on ignition. Keep foot brake pedal depressed and then push switch Ⓟ.

### Drive away function

Depressing clutch pedal (manual transmission) or engaging drive gear (automatic transmission) and then depressing the accelerator pedal releases the electrical parking brake automatically. This is not possible when the switch is pulled at the same time.

This function also helps driving away on inclines.

Aggressive drive away may reduce life time of wear parts.

### Dynamic braking when vehicle is moving

When the vehicle is moving and the switch Ⓟ is kept pulled, the electrical parking brake system will decelerate the vehicle, but will not apply statically.

As soon as the switch Ⓟ is released, dynamic braking will be stopped.

### Functionality check

When the vehicle is not moving, the electrical parking brake might be applied automatically. This is done to check the system.

### Fault

Failure mode of electrical parking brake is indicated by a control indicator ⚠ and by a code number or a vehicle message which is displayed in the Driver Information Centre. Vehicle messages ⇨ 106.

Apply electrical parking brake: pull and hold the switch Ⓟ for more than 5 seconds. If control indicator Ⓟ illuminates, electrical parking brake is applied.

Release electrical parking brake: push and hold the switch Ⓟ for more than 2 seconds. If control indicator Ⓟ extinguishes, electrical parking brake is released.

Control indicator Ⓟ flashes: electrical parking brake is not fully applied or released. When continuously flashing, release electrical parking brake and retry applying.

## Brake assist

If the brake pedal is depressed quickly and forcefully, maximum brake force is automatically applied (full braking).

The operation of the brake assist might become apparent by a pulse in the brake pedal and a greater resistance when depressing the brake pedal.

Maintain steady pressure on the brake pedal for as long as full braking is required. Maximum brake force is automatically reduced when the brake pedal is released.

## Hill start assist

The system helps prevent unintended movement when driving away on inclines.

When releasing the foot brake after stopping on an incline, the brakes remain on for a further two seconds. The brakes release automatically as soon as the vehicle begins to accelerate.

The hill start assist is not active during an Autostop.

# Ride control systems

## Traction Control system

The Traction Control system (TC) is a component of the Electronic Stability Control.

TC improves driving stability when necessary, regardless of the type of road surface or tyre grip, by preventing the drive wheels from spinning.

As soon as the drive wheels starts to spin, engine output is reduced and the wheel spinning the most is braked individually. This considerably improves the driving stability of the vehicle on slippery road surfaces.

TC is operational as soon as the control indicator extinguishes.

When TC is active flashes.

**⚠Warning**

Do not let this special safety feature tempt you into taking risks when driving.

Adapt speed to the road conditions.

Control indicator ⇨ 95.

### Deactivation

TC can be switched off when spinning of drive wheels is required: press button shortly.

Control indicator illuminates.

TC is reactivated by pressing the button again.

TC is also reactivated the next time the ignition is switched on.

## Electronic Stability Control

Electronic Stability Control (ESC) improves driving stability when necessary, regardless of the type of road surface or tyre grip. It also prevents the drive wheels from spinning.

As soon as the vehicle starts to swerve (understeer/oversteer), engine output is reduced and the wheels are braked individually. This considerably improves the driving stability of the vehicle on slippery road surfaces.

ESC is operational as soon as the control indicator extinguishes.

When ESC is active flashes.

**⚠ Warning**

Do not let this special safety feature tempt you into taking risks when driving.

Adapt speed to the road conditions.

Control indicator ⇨ 95.

### Deactivation

For very high-performance driving, ESC can be deactivated: hold button depressed for approx. 7 seconds. Control indicator illuminates.

ESC is reactivated by pressing the button again. If the TC system was previously disabled, both TC and ESC are reactivated.

ESC is also reactivated the next time the ignition is switched on.

## Interactive driving system

### Flex Ride

Flex Ride driving system allows the driver to select between three driving modes:

- SPORT mode: press button **SPORT**, LED illuminates.
- TOUR mode: press button **TOUR**, LED illuminates.
- NORMAL mode: neither button **SPORT** nor **TOUR** is pressed, no LED is illuminated.

Deactivate SPORT mode and TOUR mode by pressing corresponding button once more.

In each driving mode Flex Ride networks the following electronic systems:

- Continuous Damping Control.
- Accelerator Pedal Control.
- Steering Control.
- All-wheel drive.
- Electronic Stability Control (ESC).
- Antilock brake system (ABS) with cornering brake control (CBC).
- Automatic transmission.

### SPORT mode

The settings of the systems are adapted to a sportier driving style:

- Damping of shock absorbers reacts more stiffly to provide better contact with the road surface.
- The engine reacts more quickly to the accelerator pedal.
- Steering support is reduced.
- Engine torque of All-wheel drive is distributed more to the rear axle.
- Shift points of automatic transmission occur later.
- With SPORT mode activated, the illumination of main instruments changes from white to red.

### TOUR mode

The settings of the systems are adapted to a comfort driving style:

- Damping of shock absorbers reacts more softly.
- Accelerator pedal reacts with standard settings.
- Steering support is in standard mode.
- Engine torque of All-wheel drive is distributed mainly to the front axle.
- Shift points of automatic transmission occur in a comfort mode.
- Illumination of main instruments is white.

### Normal mode

All settings of the systems are adapted to standard values.

### Drive mode control

In each driving mode, the Drive Mode Control (DMC) detects and analyses continuously the real driving characteristic, responses by the driver, and the active dynamic state of the vehicle. If necessary, the control unit of DMC automatically changes the settings within the selected driving mode or, when recognising greater variations, the driving mode is changed for the length of variation.

If, for example, NORMAL mode is active and DMC detects a sporty driving behaviour, DMC changes several settings of the Normal mode

into sporty settings. The DMC changes to SPORT mode in case of very sporty driving behaviour.

If, for another example, TOUR mode is active and whilst driving on a winding road a sudden hard brake is necessary, DMC will detect the dynamic vehicle condition and changes the settings for suspension to SPORT mode to increase vehicle stability.

When the driving characteristic or the dynamic vehicle state returns to the former state, DMC will change the settings to the preselected driving mode.

### Personalised settings in SPORT mode

The driver can select the functions of the SPORT mode when **SPORT** button is pressed. These settings can be changed in the menu **Settings** in the Info-Display. Vehicle personalisation ⇨ 112.

## Flex Ride - OPC Version

The OPC Version of Flex Ride system works in the same way as the standard Flex Ride system with the difference that the modes have a more sporty characteristic.

OPC Flex Ride driving system allows the driver to select between three driving modes:

- OPC mode: press button **OPC**, LED illuminates.
- SPORT mode: press button **SPORT**, LED illuminates.
- NORMAL mode: neither button **SPORT** nor **OPC** is pressed, no LED illuminates.

Deactivate SPORT mode and OPC mode by pressing corresponding button once more.

In each driving mode OPC Flex Ride networks the following electronic systems:

- Continuous Damping Control.
- Accelerator Pedal Control.
- Steering Control.
- All-wheel drive.
- Electronic Stability Control (ESC).
- Antilock brake system (ABS) with cornering brake control (CBC).
- Automatic transmission.

**NORMAL mode**
In NORMAL mode, when neither SPORT nor OPC button is pressed, all settings of the systems are adapted to standard values.

**SPORT mode**
The settings of the systems are adapted to a sportier driving style.

**OPC mode**
The drive dynamic characteristics are adapted to high performance settings.

In this mode the illumination of main instruments is switched to red.

**Personalised settings in the OPC mode**
The driver can select the functions of the OPC mode when **OPC** button is pressed. These settings can be changed in the menu **Settings** in the Info-Display. Vehicle personalisation ⇨ 112.

# Driver assistance systems

**⚠ Warning**

Driver assistance systems are developed to support the driver and not to replace his attention.

The driver accepts full responsibility when driving the vehicle.

When using driver assistance systems, always take care regarding the current traffic situation.

## Cruise control

The cruise control can store and maintain speeds of approx. 30 to 200 km/h. Deviations from the stored speeds may occur when driving uphill or downhill.

For safety reasons the cruise control cannot be activated until the foot brake has been operated once. Activating in first gear is not possible.

Do not use the cruise control if it is not advisable to maintain a constant speed.

With automatic transmission, only activate cruise control in automatic mode.

Control indicator ⇨ 98.

### Switching on
Press button, control indicator in instrument cluster illuminates white.

### Activation
Accelerate to the desired speed and turn thumb wheel to **SET/-**: the current speed is stored and

maintained. Control indicator illuminates green. Accelerator pedal can be released.

Vehicle speed can be increased by depressing the accelerator pedal. When the accelerator pedal is released, the previously stored speed is resumed.

Cruise control remains activated while gearshifting.

### Increase speed

With cruise control active, hold thumb wheel turned to **RES/+** or briefly turn to **RES/+** repeatedly: speed increases continuously or in small increments.

Alternatively accelerate to the desired speed and store by turning to **SET/-**.

### Reduce speed

With cruise control active, hold thumb wheel turned to **SET/-** or briefly turn to **SET/-** repeatedly: speed decreases continuously or in small increments.

### Deactivation

Press button , control indicator in instrument cluster illuminates white. Cruise control is deactivated. Last used set speed is stored in memory for later speed resume.

Automatic deactivation:

- vehicle speed below approx. 30 km/h,
- vehicle speed above approx. 200 km/h,
- the brake pedal is depressed,
- the clutch pedal is depressed for a few seconds,
- selector lever in **N**,
- engine speed in a very low range,
- the Traction Control system or Electronic Stability Control is operating.

### Resume stored speed

Turn thumb wheel to **RES/+** at a speed above 30 km/h. The stored speed will be obtained.

### Switching off

Press button , control indicator in instrument cluster extinguishes. The stored speed is deleted.

Switching off the ignition also switches off cruise control and deletes the stored speed.

## Adaptive cruise control

Adaptive cruise control is an enhancement to traditional cruise control with the additional feature of maintaining a certain distance behind the vehicle ahead.

Adaptive cruise control automatically decelerates the vehicle when approaching a slower moving vehicle. It then adjusts the vehicle speed to follow the vehicle ahead at the selected following distance. The vehicle speed increases or decreases to follow the vehicle in front, but will not exceed the set speed. It may apply limited braking with activated brake lights.

The adaptive cruise control can store and maintain speeds over approx. 25 km/h and brakes automatically to follow a slower vehicle driving ahead to a minimum speed of 15 km/h.

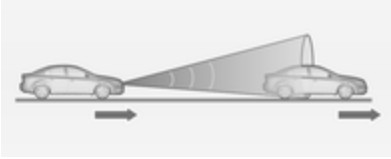

Adaptive cruise control uses a radar sensor to detect the vehicles ahead. If no vehicle is detected in the driving path, the adaptive cruise control will behave like a traditional cruise control.

For safety reasons, the system cannot be activated before the brake pedal has been depressed once since switching on ignition. Activation in first gear is not possible.

Adaptive cruise control is mainly advised to be used on long straight roads like highways or country roads with steady traffic. Do not use the system if it is not advisable to maintain a constant speed.

Control indicator ⇨ 98, ⇨ 98.

**⚠ Warning**

The complete driver attention is always required while driving with adaptive cruise control. The driver stays fully in control of the vehicle because the brake pedal, the accelerator pedal and the cancel switch have priority over any adaptive cruise control operation.

## Switching on

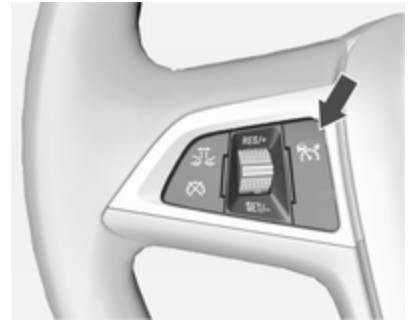


Press button to switch on adaptive cruise control. The control indicator illuminates white.

## Activation by setting the speed

Adaptive cruise control can be activated between 25 km/h and 180 km/h.

Accelerate to the desired speed and turn thumb wheel to **SET/-**, the current speed is stored and maintained. Control indicator illuminates green.

The adaptive cruise control symbol, the following distance setting and set speed are indicated in the top line of the Driver Information Centre.

The accelerator pedal can be released. Adaptive cruise control remains activated while gearshifting.

To display the adaptive cruise control page on the Driver Information Centre, press the **MENU** button on the turn signal lever and turn the adjuster wheel to choose adaptive cruise control page.

## Overriding set speed

It is always possible to drive faster than the selected set speed by depressing the accelerator pedal. When the accelerator pedal is released, the vehicle returns to the desired distance if a slower vehicle is ahead. Otherwise it returns to the stored speed.

Once the system is activated, adaptive cruise control decelerates or brakes if it detects a vehicle ahead, which is slower or closer than the desired following distance.

**⚠ Warning**

Accelerating by the driver deactivates braking by the system. This is indicated as a popup warning in the Driver Information centre.

## Increase speed

With adaptive cruise control active, hold thumb wheel turned to RES/+: speed increases continuously in large increments, or activate repeatedly RES/+: speed increases in small increments.

If the vehicle is driven with adaptive cruise control active much faster than the desired speed, for instance after depressing the accelerator pedal, then the current speed can be stored and maintained by turning the thumb wheel to SET/-.

## Reduce speed

With adaptive cruise control active, hold thumb wheel turned to SET/-: speed decreases continuously in large increments, or activate repeatedly SET/-: speed decreases in small increments.

If the vehicle is driven with adaptive cruise control active much slower than the desired speed, for instance because of a slower vehicle ahead, then the current speed can be stored and maintained by turning the thumb wheel to SET/-.

## Resume stored speed

If the system is switched on but inactive, then turn thumb wheel to RES/+ at a speed above 25 km/h to obtain the stored speed.

## Setting the following distance

When adaptive cruise control detects a slower moving vehicle in the driving path, it will adjust the vehicle speed to maintain the following distance selected by the driver.

The following distance can be set to near, medium or far.

Press button , the current setting is shown on the Driver Information Centre. Press button  again to change the following distance. The setting is also displayed in the top line of the Driver Information Centre.

The selected following distance is indicated by filled distance bars in the adaptive cruise control page.

Note that the following distance setting is shared with the sensitivity setting of forward collision alert.

Example: If setting 3 (far) is selected, then the driver is warned sooner before a possible collision, also if adaptive cruise control is inactive or switched off.

**⚠ Warning**

The driver accepts fully responsibility for the valid following distance based on traffic-, weather- and visibility conditions.

## Detecting the vehicle ahead

The green illuminated vehicle ahead control indicator displays in the speedometer when the system is detecting a vehicle in the driving path.

If this symbol does not display, or displays briefly, adaptive cruise control will not respond to vehicles ahead.

## Deactivation

Adaptive cruise control is deactivated by the driver when:

- button is pressed,
- brake pedal is applied,
- clutch pedal is depressed for more than four seconds,
- gear selector lever of automatic transmission is moved to **N**.

The system is also automatically deactivated when:

- vehicle speed accelerates above 190 km/h or slows down below 15 km/h,
- Traction Control system is operating for more than 20 seconds,
- Electronic Stability Control is operating,
- there is no traffic and nothing detected on the road sides for several minutes. In this case there are no radar echoes and the sensor may report that it is blocked,
- collision imminent braking is applying the brakes,
- radar sensor is blocked by an ice or water film,
- fault is detected in the radar, engine or brake.

When adaptive cruise control is deactivated automatically, the control indicator illuminates white and a warning symbol is displayed as a pop-up in the Driver Information Centre.

The stored speed is maintained.

**⚠Warning**

When adaptive cruise control is deactivated, the driver has to take over brake and engine control.

## Switching off

Press button to switch off adaptive cruise control. The control indicator extinguishes. The stored speed is deleted.

Switching off the ignition also switches off adaptive cruise control and deletes the stored speed.

## Driver's attention

- Use adaptive cruise control carefully on bends or mountain roads, as it can lose the vehicle ahead and need time to detect it again.
- Do not use the system on slippery roads as it can create fast changes in tyre traction (wheel spinning), so that you could lose control.
- Do not use adaptive cruise control during rain, snow or heavy dirt, as the radar sensor can be covered by a water film, dust, ice or snow. This reduces or suppresses completely the visibility. In case of sensor blockage, clean the sensor cover.

## System limits

- The system's automatic brake force does not permit strong braking and the braking level may not be sufficient to avoid a collision.
- After a sudden lane change, the system needs a certain time to detect the next preceding vehicle. So if a new vehicle is detected, the system may accelerate instead of braking.
- Adaptive cruise control does ignore the oncoming traffic.
- Adaptive cruise control does not brake for pedestrians, animals or other objects.

### Bends

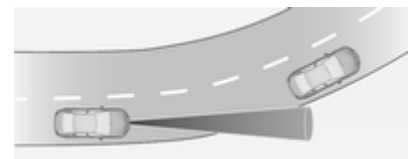

The adaptive cruise control calculates a predicted path based on the centrifugal force. This predicted path considers the current bend characteristic, but cannot consider a future bend change. The system may lose the current vehicle ahead or consider a vehicle which is not in the actual lane. This can happen when entering or exiting a bend or if the bend gets stronger or weaker. If it no

longer detects any vehicle ahead, then control indicator 🚗 will extinguish.

If the centrifugal force is too high in a bend, the system slows down the vehicle slightly. This braking level is not designed to avoid spinning-off the bend. The driver is responsible for reducing the selected speed before entering a bend and in general to adapt the speed to the road type and to existing speed limits.

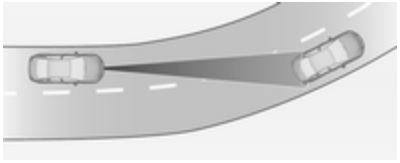

### Motorways

On motorways, adapt the set speed to the situation and the weather. Always consider that adaptive cruise control has a limited visibility range, a limited braking level and a certain reaction time to verify if a vehicle is on the driving path or not. Adaptive cruise control may not be able to brake the vehicle in time to avoid a collision with a much slower vehicle or after a lane change. This is particularly true if driving fast or if the visibility is reduced due to weather conditions.

While entering or exiting a motorway, adaptive cruise control may lose the vehicle ahead and accelerate up to the set speed. For this reason, decrease the set speed before the exit or before the entry.

### Vehicle path changes

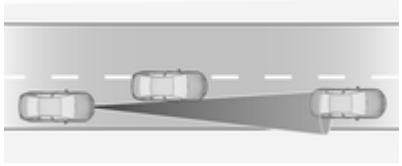

If another vehicle enters your driving path, adaptive cruise control will first consider the vehicle when it is completely in your path. Be ready to take action and press the brake pedal, if you need to brake quicker.

### Hill and trailer considerations

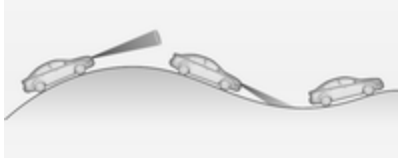

System performance on hills and when towing a trailer depends on your vehicle speed, vehicle load, traffic conditions and the road gradient. It may not detect a vehicle in your path while driving on hills. On steep hills, you may have to use the accelerator pedal to maintain your vehicle speed. When going downhill, especially when towing a trailer, you may have to brake to maintain or reduce your speed.

Note that applying the brake deactivates the system. It is not recommended to use adaptive cruise control on steep hills especially when towing a trailer.

### Radar unit

The radar unit is mounted behind the radiator grille below the brand emblem.

**⚠Warning**

The radar unit was aligned carefully during manufacture. Therefore, after a frontal accident, do not use the system. The front bumper may appear to be intact, however the sensor behind can be out of position and react incorrectly. After an accident, consult a workshop to verify and correct the adaptive cruise control sensor position.

### Settings

Settings can be changed in the **Auto collision preparation** menu in the vehicle personalisation, ⇨ 112.

### Fault

If the adaptive cruise control does not work due to temporary conditions (e.g. blockage by ice) or if there is a permanent system error, then a message is displayed in the Driver Information Centre.

Vehicle messages ⇨ 106.

## Forward collision alert

The forward collision alert can help to avoid or reduce the harm caused by front-end crashes. If a vehicle directly ahead is approached too quickly, a warning chime and alert in the Driver Information Centre is provided.

The green illuminated vehicle ahead symbol 🚗 appears in the speedometer when the system has detected a vehicle in the driving path. Precondition is, that forward collision alert is activated in the vehicle

personalisation menu ⇨ 112 or that it is not deactivated by the button (depending on the system, see following).

Depending on the vehicle's equipment, there are two variants of the forward collision alert available:

- **Forward collision alert based on radar system**

  on vehicles equipped with adaptive cruise control ⇨ 158.
- **Forward collision alert based on front camera system**

  on vehicles with no or traditional cruise control ⇨ 157.

## Forward collision alert based on radar system

The system uses the radar sensor behind the radiator grille to detect a vehicle directly ahead, in your path, within a distance of max. 150 metres.

### Activation

Forward collision alert operates automatically above walking speed, provided that **Auto collision preparation** setting is not deactivated in the vehicle personalisation menu ⇨ 112.

### Selecting the alert sensitivity

The alert sensitivity can be set to near, medium or far.

Press button , the current setting is shown on the Driver Information Centre. Press button  again to change the alert sensitivity. The setting is also displayed in the top line of the Driver Information Centre.

Note that the alert timing sensitivity setting is shared with the following distance setting of the adaptive cruise control. So changing the alert timing sensitivity changes the adaptive cruise control following distance setting.

### Alerting the driver

When approaching another vehicle too rapidly, the collision alert warning page will be indicated in the Driver Information Centre. Simultaneously a warning chime sounds. Press the brake pedal, if it is requested by the situation.

## Settings

Settings can be changed in the **Auto collision preparation** menu in the vehicle personalisation ⇨ 112.

## Forward collision alert based on front camera system

Forward collision alert uses the front camera system in the windscreen to detect a vehicle directly ahead, in your path, within a distance of approx. 60 metres.

### Activation

Forward collision alert operates automatically above 40 km/h, if it is not deactivated by button ⚠, see below.

### Selecting the alert sensitivity

The alert sensitivity can be set to near, medium or far.

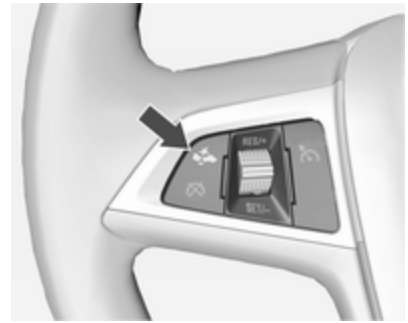

Press button ⚠, the current setting is shown on the Driver Information Centre. Press button ⚠ again to change the alert sensitivity.

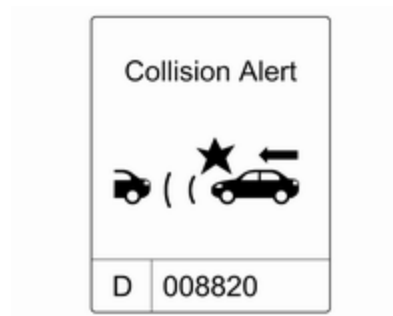

### Alerting the driver

When approaching another vehicle too rapidly, the collision alert warning page will be indicated in the Driver Information Centre. Simultaneously a warning chime sounds. Press the brake pedal, if it is requested by the situation.

### Deactivation

The system can be deactivated. Press button ⚠ as often as the following message appears in the Driver Information Centre.

## General information for both variants of forward collision alert

**⚠ Warning**

Forward collision alert is just a warning system and does not apply the brakes. When approaching a vehicle ahead too rapidly, it may not provide you enough time to avoid a collision.

The driver accepts fully responsibility for the valid following distance based on traffic-, weather- and visibility conditions.

The complete attention of the driver is always required while driving. He shall always be ready to take action and apply the brakes.

### System limitations

The system is designed to warn only for vehicles, but may react also on other metallic objects.

In the following cases forward collision alert may not detect a vehicle ahead or sensor performance is limited:

- on winding roads,
- when weather limits visibility, e.g. fog, rain, or snow,
- when the sensor is blocked by snow, ice, slush, mud, dirt, or windscreen damage.

## Following distance indication

The following distance indication displays the distance to a preceding moving vehicle. The system uses, depending on the vehicle equipment, either the radar behind the radiator grille or the front camera in the windscreen to detect the distance of a vehicle directly ahead in your path. It is active at speeds above 40 km/h.

When a preceding vehicle is detected ahead, the distance is indicated in seconds, displayed on a page in the Driver Information Centre ⇨ 98. Press the **MENU** button on the turn signal lever to select **Vehicle Information Menu** and turn the adjuster wheel to choose following distance indication page.

The minimum indicated distance is 0.5 s.

If there is no vehicle ahead or the vehicle ahead is out of range, two dashes will be displayed: -.- s.

## Active Emergency Braking

Active emergency braking can help to reduce the damage from crashes with vehicles and obstacles directly ahead, when a collision can no longer be avoided either by manual braking or by steering. Before the active emergency braking applies, the driver is warned by the forward collision alert ⇨ 165.

The feature uses various inputs (e.g. radar sensor, brake pressure, vehicle speed) to calculate the probability of a frontal collision.

Active emergency braking operates automatically above walking speed, provided that **Auto collision preparation** setting is not deactivated in the vehicle personalisation menu ⇨ 112.

The system includes:

- **Brake preparation system**
- **Emergency automatic braking**
- **Forward looking brake assist**

**⚠Warning**

This system is not intended to replace the driver responsibility of driving the vehicle and looking ahead. Its function is limited to supplemental use only. The driver

shall continue to apply the brake pedal as the driving situation dictates.

## Brake preparation system

When approaching a vehicle ahead so quickly that a collision is likely, the brake preparation system slightly pressurises the brakes. This reduces the response time, when a manual or automatic braking is requested.

The brake system is prepared so that braking can occur more rapidly.

## Emergency automatic braking

After the brake preparation and just before the imminent collision, this function automatically applies limited braking to reduce the impact speed of the collision.

## Forward looking brake assist

In addition to brake preparation system and emergency automatic braking, the forward looking brake assist function makes the brake assist more sensitive. In this way, depressing the brake pedal slightly results immediately in a strong braking. This function helps the driver braking quicker and stronger before the imminent collision.

**⚠ Warning**

Active emergency braking is not designed to apply strong autonomous braking or to avoid automatically a collision. It is designed to reduce the vehicle speed before collision. It may not react on stopped vehicles, pedestrians or animals. After a sudden lane change, the system needs a certain time to detect the next preceding vehicle.

The complete attention of the driver is always required while driving. The driver shall always be ready to take action and apply the brakes and steer to avoid collisions. The system is designed to work with all occupants wearing their seat belts.

### System limitations

The active emergency braking has limited or no function during rain, snow or heavy dirt, as the radar sensor can be covered by a water film, dust, ice or snow. In case of sensor blockage, clean the sensor cover.

In some seldom cases the active emergency braking system may provide a short automatic braking in situations that seem to be unnecessary, for instance due to traffic signs in a curve or due to vehicles in another lane. This is acceptable operation, the vehicle does not need service. Firmly apply the accelerator pedal to override the automatic braking.

## Settings

Settings can be changed in the **Auto collision preparation** menu in the vehicle personalisation, ⇨ 112.

## Fault

In the event of a system service requirement, a message is displayed in the Driver Information Centre.

If the system does not work as it should do, vehicle messages are displayed in the Driver Information Centre.

Vehicle messages ⇨ 106.

# Parking assist

The parking assist makes parking easier by measuring the distance between the vehicle and obstacles, and giving acoustic signals. It is the driver, however, who bears full responsibility for the parking manoeuvre.

The system consists of four ultrasonic parking sensors in each of the front and rear bumpers.

The system uses two different frequencies for the front and rear sensors, each with a different sound.

Control indicator P⁾⁾▲ ⇨ 95.

## Activation

When reverse gear is engaged, the system is activated automatically.

The front parking assist can also be activated at a low speed by pressing the P⁾⁾▲ button.

An illuminated LED in the parking assist button indicates that the system is ready to operate.

## Indication

The system warns the driver with acoustic signals against handicaps in front of or behind the vehicle.

Depending on which of the sensors are closer to an obstacle, you will hear a buzzing sound of the respective sensors. The interval between the sounds becomes shorter as the vehicle gets closer to the obstacle. When the distance is less than 30 cm, the buzzing is continuous.

Depending on the version the distance to a front obstacle is indicated by changing segments in the Driver Information Centre ⇨ 98.

The distance indication in the display can be inhibited by vehicle messages with a higher priority. Once the distance indication was overwritten by a vehicle message, distance is no more indicated until parking assist is activated again.

### Deactivation

Deactivate the system by pressing the P⁄⁄▲ button.

The LED in the button will extinguish and **Park Assist Off** will be displayed in the Driver Information Centre.

The system is inactive automatically above a certain speed.

If the P⁄⁄▲ button is pressed once within an ignition cycle, the front parking assist is automatically reactivated when the vehicle speed falls below a certain value.

### Fault

In the event of a fault in the system, P⁄⁄▲ illuminates or a message is displayed in the Driver Information Centre.

If the system does not work due to temporary conditions like snow covered sensors, P⁄⁄▲ illuminates or a message is displayed in the Driver Information Centre.

Vehicle messages ⇨ 106.

## Advanced parking assist

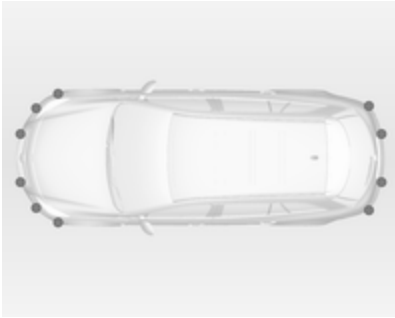

The advanced parking assist system manoeuvres the driver into a parking slot by giving instructions on the Driver Information Centre and acoustic signals. It is the driver, however, who bears full responsibility for accepting the parking slot suggested by the system and the parking manoeuvre.

The system uses the sensors of the parking assist system in combination with two additional sensors on both sides of the front bumper.

## Activation

When looking for a parking slot, the system has to be activated by pressing the button.

The system only operates at a speed up to 30 km/h.

The maximum allowed parallel distance between the vehicle and a row of parked cars is 1.8 m.

## Functionality

When the vehicle passes a row of cars and the system is activated, the advanced parking assist system begins looking for a suitable parking slot. When a suitable slot is detected, a visual feedback and acoustic signals are given on the Driver Information Centre.

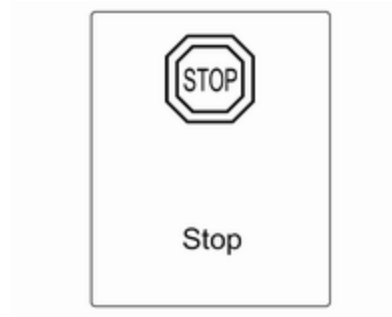


The suggestion of the system is accepted when the vehicle is stopped by the driver within 10 metres after the message is given. The system calculates the optimal route into the parking slot. Then it manoeuvres the driver into the slot by giving detailed instructions.

The instructions show:

- a hint when driving faster than 30 km/h,
- the demand to stop the vehicle, when a parking slot is detected,
- the direction of driving during the parking manoeuvre,
- the steering wheel position during parking,
- for some of the instructions a progress bar is shown.

A successful parking manoeuvre is indicated by the target symbol.

If the driver does not stop the vehicle within 10 metres after a parking slot is proposed, the system starts to search for another suitable parking slot.

### Changing the parking side

The system is configured to detect parking slots on the passenger side. To detect parking slots on the driver side, push button P for approx. 2 seconds.

### Display priorities

After activating the advanced parking assist, a message appears on the Driver Information Centre. Indication of messages with higher priority like Vehicle Messages ⇨ 106 will be displayed. After approving the message by pressing the **SET/CLR** button, parking assist messages appear again and parking can be continued.

### Deactivation

The system is deactivated by:

- pushing the P button
- parking manoeuvre successfully ended
- driving faster than 30 km/h
- switching off the ignition

Deactivation by the driver or by the system during manoeuvring will be indicated by **Parking Deactivated** in the Driver Information Centre.

### Fault

A message appears in the Driver Information Centre when:

- there is a fault in the system
- the driver did not successfully complete the parking manoeuvre
- the system is not operational

If an object is detected during parking instructions, **STOP** is indicated in the Driver Information Centre. Removing the object will resume the parking manoeuvre. If the object is not removed, the system will be deactivated. Push button to activate the system and search for a new parking slot.

## Important hints for using the parking assist systems

**⚠Warning**

Under certain circumstances, various reflective surfaces on objects or clothing as well as external noise sources may cause the system to fail to detect obstacles.

Special attention has to be paid to low obstacles which can damage the lower part of the bumper.

**Caution**

Performance of the sensor can be reduced when sensors are covered, e.g. by ice or snow.

Performance of the parking assist system can be reduced due to heavy loading.

Special conditions apply if there are taller vehicles involved (e.g. off-road vehicles, mini vans, vans). Object identification in the upper part of these vehicles cannot be guaranteed.

Objects with a very small reflection cross section, like objects of narrow size or soft materials, may not be detected by the system.

Parking assist will not detect objects out of the detection range.

**Note**

The parking assist system automatically detects factory-fitted towing equipment. It is deactivated when the connector is plugged in.

It is possible that the sensor detects a non-existing object (echo disturbance) caused by external acoustical or mechanic disturbances.

Advanced parking assist system may not respond to changes in the parking space after initiating a parallel parking manoeuvre.

# Traffic sign assistant

## Functionality

The traffic sign assistant system detects designated traffic signs via a front camera and displays them in the Driver Information Centre.

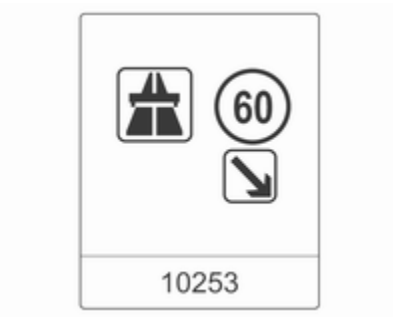


Traffic signs, which will be detected, are:

**Limit- and no passing signs**

- speed limit
- no passing
- end of speed limit
- end of no passing

**Road signs**

beginning and end of:

- motorways
- A-roads
- play streets

**Add on signs**

- additional hints to traffic signs
- restriction of trailer towing
- wet warning
- ice warning
- direction arrows

Speed limit signs are displayed in the Driver Information Centre until the next speed limit sign or end of speed limit is detected or up to a defined sign timeout.

Combinations of more signs in the display are possible.

An exclamation mark in a frame indicates that there is add on sign detected which cannot be recognised by the system.

The system is active up to a speed of 200 km/h depending on the lighting conditions. At night the system is active up to a speed of 160 km/h.

As soon as the speed becomes slower than 55 km/h the display will be reset and the content of the traffic sign page will be cleared. The next recognized speed indication will be displayed.

## Display indication

Traffic signs are displayed on the page **Traffic sign detection** on the Driver Information Centre, chosen via the adjuster wheel on the turn signal lever ⇨ 98.

When another function on the Driver Information Centre menu was selected and then **Traffic sign detection** page is chosen again, the last recognized traffic sign will be displayed.

If the system is deactivated by itself, the content of the traffic sign page is cleared (not if equipped with a navigation system), indicated by the following symbol:

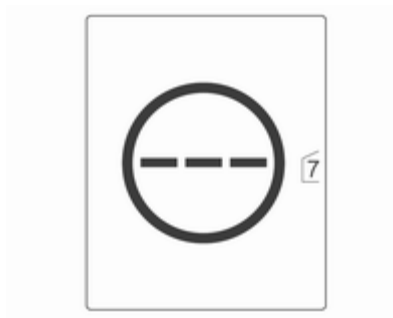


The content of the traffic sign page is also cleared during driving by pushing the **SET/CLR** button on the turn signal lever for a longer time.

## Pop-up function

Speed limits and no passing signs are displayed as pop-ups on the Driver Information Centre.

The pop-up function can be deactivated on the traffic sign page by pressing the **SET/CLR** button on the turn signal lever.

Once setting page is displayed, select **Off** to deactivate pop-up function. Reactivate by selecting **On**. When switching on the ignition, pop-up function is deactivated.

Pop-up indication is displayed for approx. 8 seconds in the Driver Information Centre.

## Traffic sign detection in conjunction with navigation system

If the vehicle is equipped with a navigation system, the following features can be available:

- constant indication of actual speed limits
- on heavy weather conditions, the navigation data for speed limits are displayed

## Fault

The traffic sign assistant system may not operate correctly when:

- the area of the windscreen, where the front camera is located, is not clean
- traffic signs are completely or partially covered or difficult to discern
- there are adverse environmental conditions like heavy rain, snow, direct sunlight or shadows. In this case **No Traffic Sign Detection due to Weather** is indicated on the display
- traffic signs are incorrectly mounted or damaged
- traffic signs do not comply with the Vienna Convention on traffic signs (Wiener Übereinkommen über Straßenverkehrszeichen)

| Caution |
| --- |
| The system is intended to help the driver within a defined speed range to discern certain traffic |

signs. Do not ignore traffic signs which are not displayed by the system.

The system does not discern any other than the conventional traffic signs that might give or end a speed limit.

Do not let this special feature tempt you into taking risks when driving.

Always adapt speed to the road conditions.

The driver assistance systems do not relieve the driver from full responsibility for vehicle operation.

## Lane departure warning

The lane departure warning system observes the lane markings between which the vehicle is driving via a front camera. The system detects lane changes and warns the driver in the event of an unintended lane change by visual and acoustic signals.

Criteria for the detection of an unintended lane change are:

- no operation of turn signals
- no brake pedal operation
- no active accelerator operation or speeding-up
- no active steering

If the driver is active, no warning will be issued.

### Activation

The lane departure warning system is activated by pressing the button. The illuminated LED in the button indicates that the system is switched on. When the control indicator in the instrument cluster illuminates green, the system is ready to operate.

The system is only operable at vehicle speeds above 56 km/h and if lane markings are available.

When the system recognises an unintended lane change, the control indicator changes to yellow and flashes. Simultaneously a chime sound is activated.

### Deactivation

The system is deactivated by pressing button, the LED in the button extinguishes.

At speeds below 56 km/h the system is inoperable.

### Fault

The lane departure warning system may not operate properly when:

- the windscreen is not clean
- there are adverse environmental conditions like heavy rain, snow, direct sunlight or shadows

The system cannot operate when no lane marking is detected.

# Fuel

## Fuel for petrol engines

Only use unleaded fuel that complies with European standard EN 228 or E DIN 51626-1 or equivalent.

Your engine is capable to run with E10 fuel that fulfills these standards. E10 fuel contains up to 10 % bioethanol.

Use fuel with the recommended octane rating ⇨ 244. Use of fuel with too low an octane rating can reduce engine power and torque and slightly increases fuel consumption.

**Caution**

Do not use fuel or fuel additives that contain metallic compounds such as manganese-based additives. This may cause engine damage.

**Caution**

Use of fuel that does not comply to EN 228 or E DIN 51626-1 or equivalent can lead to deposits or engine damage and may affect your warranty.

**Caution**

Use of fuel with too low an octane rating could lead to uncontrolled combustion and engine damage.

## Fuel for diesel engines

Only use diesel fuel that complies with EN 590.

In countries outside the European Union use Euro-Diesel fuel with a sulfur concentration below 50 ppm.

**Caution**

Use of fuel that does not comply to EN 590 or similar can lead to engine powerloss, increased wear or engine damage and may affect your warranty.

Do not use marine diesel oils, heating oils, Aquazole and similar diesel-water emulsions. Diesel fuels must not be diluted with fuels for petrol engines.

## Fuel for liquid gas operation

Liquid gas is known as LPG (Liquefied Petroleum Gas) or under its French name GPL (Gaz de Pétrole Liquéfié). LPG is also known as Autogas.

LPG consists mainly of propane and butane. The octane rating is between 105 and 115, depending on the butane proportion. LPG is stored liquid at around 5 - 10 bar pressure.

The boiling point depends on the pressure and mixing ratio. At ambient pressure, it is between -42 °C (pure propane) and -0.5 °C (pure butane).

**Caution**

The system works at an ambient temperature of approx. -8 °C to 100 °C.

Full function of the LPG system can only be guaranteed with liquid gas which complies with the minimum requirements of DIN EN 589.

### Fuel selector

Press the **LPG** button to switch between petrol and liquid gas operation as soon as the required parameters (coolant temperature, gas temperature and minimum engine speed) have been reached. The requirements are usually fulfilled after around 60 seconds (depending on exterior temperature) and the first firm press on the accelerator. The LED status shows the current operating mode.

- off = petrol operation
- illuminates = liquid gas operation
- flashes = no switching is possible, one type of fuel is empty

As soon as the liquid gas tank is empty, petrol operation is automatically engaged until the ignition is switched off.

Every six months, run the petrol tank down until control indicator ⬬ illuminates, then refuel. This helps maintain fuel quality and system function for petrol operation.

Fill the tank completely at regular intervals to prevent corrosion in the tank.

### Faults and remedies

If gas mode is not possible, check the following:

- Is there enough liquid gas present?
- Is there enough petrol present for starting?

Due to extreme temperatures in combination with the gas composition, it may take slightly longer before the system switches from petrol to gas mode.

In extreme situations, the system may also switch back to petrol mode if the minimum requirements are not fulfilled.

Seek the assistance of a workshop in the event of all other faults.

**Caution**

Repairs and adjustments may only be made by trained specialists in order to maintain the safety and warranty on the LPG system.

Liquid gas is given a particular odour (odorised) so that any leaks can be detected easily.

**⚠ Warning**

If you smell gas in the vehicle or in the immediate vicinity, switch to petrol mode immediately. No smoking. No naked flames or ignition sources.

If possible, close the manual shut-off valve on the multivalve. The multivalve is located on the liquid gas tank in the load compartment, underneath the rear floor cover.

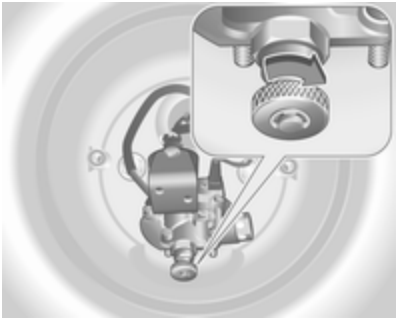

Turn the thumb wheel clockwise.

If no further gas odour is perceptible when the manual shut-off valve is closed, the vehicle can be used in petrol mode. If the gas odour persists, do not start the engine. Have the cause of the fault remedied by a workshop.

When using underground car parks, follow the instructions of the operator and local laws.

**Note**

In the event of an accident, switch off the ignition and lights. Close the manual shut-off valve on multivalve.

## Refuelling

**⚠ Danger**

Before refuelling, switch off engine and any external heaters with combustion chambers. Switch off any mobile phones.

Follow the operating and safety instructions of the filling station when refuelling.

**⚠ Danger**

Fuel is flammable and explosive. No smoking. No naked flames or sparks.

If you can smell fuel in your vehicle, have the cause of this remedied immediately by a workshop.

**Caution**

In case of misfuelling, do not switch on ignition.

Fuel filler flap is located at right rear side of vehicle.

The fuel filler flap can only be opened if the vehicle is unlocked. Pull flap at the recess and open.

To open, turn the cap slowly to the left.

### Petrol and Diesel refuelling

To open, turn the cap slowly to the left.

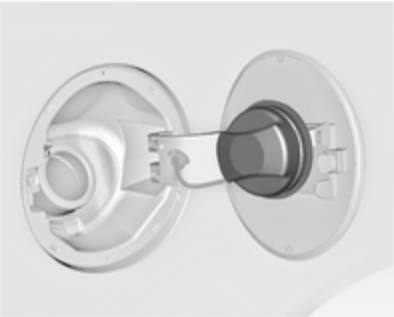

The fuel filler cap can be retained in the bracket on the fuel filler flap.

For refuelling, fully insert the pump nozzle and switch it on.

After automatic cut-off, it can be topped up with max. two doses of fuel.

| Caution |
| --- |
| Wipe off any overflowing fuel immediately. |

To close, turn the fuel filler cap to the right until it clicks.

Close the flap and let engage.

## Ethanol E85 refuelling

To open, turn the fuel filler cap a quarter turn to the left.

The fuel filler cap can be retained in the bracket on the fuel filler flap.

For refuelling, fully insert the pump nozzle and switch it on.

After automatic cut-off, it can be topped up with max. two doses of fuel.

| Caution |
| --- |
| Wipe off any overflowing fuel immediately. |

To close, turn the fuel filler cap to the right (clockwise) until you hear three clicks, about a quarter of a turn.

Close the flap and let engage.

## Liquid gas refuelling

Follow the operating and safety instructions of the filling station when refuelling.

The filling valve for the liquid gas is behind the fuel filler cap.

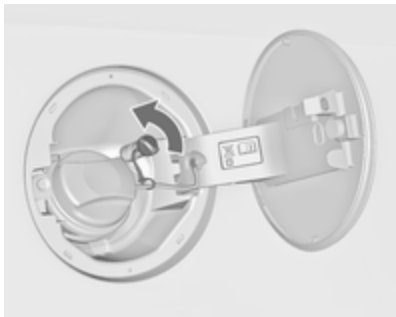

Unscrew protective cap from the filler neck.

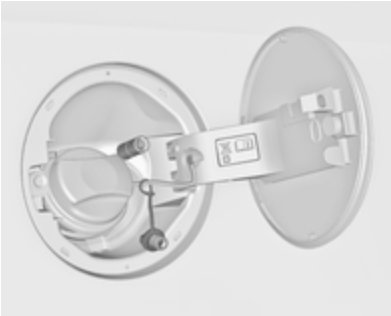

Fit the required adapter.

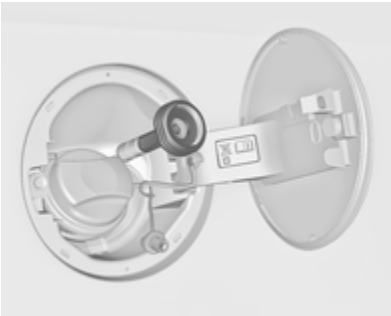

**ACME Adapter:** Screw the nut of the filling nozzle onto the adapter. Press locking lever on filler nozzle down.

**DISH (Italy) filler neck:** Place the filler nozzle into the adapter. Press locking lever on filler nozzle down.

**Bayonet filler neck:** Place filler nozzle on the adapter and turn to the left or right through one quarter turn. Pull locking lever of filler nozzle fully.

**EURO filler neck:** Press the filler nozzle onto the adapter until it engages.

Press the button of the liquid gas supply point. The filling system stops or begins to run slowly when 80% ofthe tank volume is reached (maximum fill level).

Release button on filling system and the filling process stops. Release the locking lever and remove the filler nozzle. A small quantity of liquid gas can escape.

Remove adapter and stow in vehicle.

Fit protective cap to prevent the penetration of foreign bodies into the filler opening and the system.

**⚠Warning**

Due to the system design, an escape of liquid gas after releasing the locking lever is unavoidable. Avoid inhaling.

**⚠Warning**

The liquid gas tank may only be filled to 80% for safety reasons.

The multivalve on the liquid gas tank automatically limits the fill quantity. If a larger quantity is added, we recommend not exposing the vehicle to the sun until the excess amount has been used up.

**Filling adapter**

As filling systems are not standardised, different adapters are required which are available from Opel Distributors and from Opel Authorised Repairers.

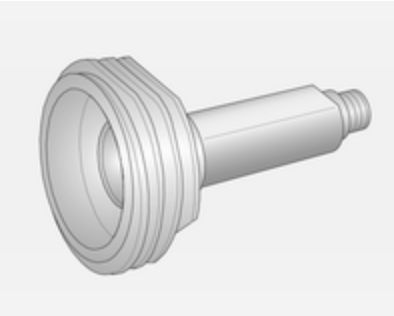

**ACME adapter:** Belgium, Germany, Ireland, Luxembourg, Switzerland

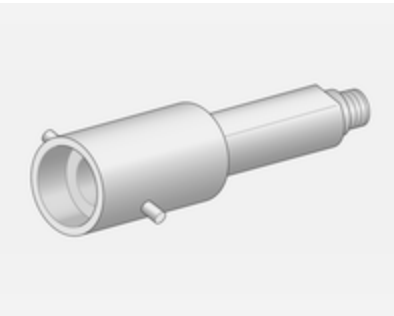

**Bayonet adapter:** Netherlands, Norway, Spain, United Kingdom

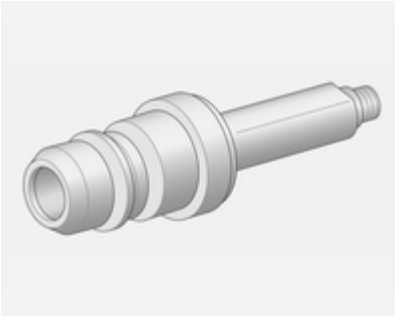

**EURO adapter:** Spain

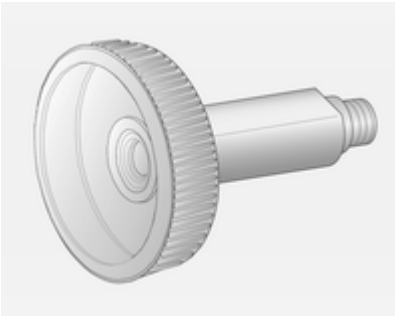

**DISH (Italy) adapter:** Bosnia-Herzegovina, Bulgaria, Denmark, Estonia, France, Greece, Italy, Croatia, Latvia, Lithuania, Macedonia, Austria, Poland, Portugal, Romania, Sweden, Switzerland, Serbia, Slovakia, Slovenia, Czech Republic, Turkey, Ukraine, Hungary

### Fuel filler cap

Only use genuine fuel filler caps. Diesel-engined and Ethanol-engined vehicles have special fuel filler caps.

## Fuel consumption - $CO_2$-Emissions

The fuel consumption (combined) of the model Opel Insignia is within a range of 4.3 to 11.3 l/100 km.

The $CO_2$ emission (combined) is within a range of 115 to 265 g/km.

For the values specific for your vehicle, refer to the EEC Certificate of Conformity provided with your vehicle or other national registration documents.

### General information

The official fuel consumption and specific $CO_2$ emission figures quoted relate to the EU base model with standard equipment.

Fuel consumption data and $CO_2$ emission data are determined according to regulation R (EC) No. 715/2007 (in the version respectively applicable), taking into consideration the vehicle weight in running order, as specified by the regulation.

The figures are provided only for the purpose of comparison between different vehicle variants and must not be taken as a guarantee for the actual fuel consumption of a particular vehicle. Additional equipment may result in slightly higher results than the stated consumption and $CO_2$ figures.

Furthermore, fuel consumption is dependent on personal driving style as well as road and traffic conditions.

# Towing

## General information

The factory-fitted towing equipment is folded up under the rear bumper fascia.

Entrust retrofitting of towing equipment to a workshop. It may be necessary to make changes that affect the cooling system, heat shields or other equipment. Only use towing equipment that has been approved for your vehicle.

To avoid vehicle damage, the power tailgate can not be operated with the radio remote control when a trailer is electrically connected.

Fitting of towing equipment could cover the opening of the towing eye. If this is the case use the coupling ball bar for towing.

Installation dimensions of factory-fitted towing equipment ⇨ 310.

## Driving characteristics and towing tips

Before attaching a trailer, lubricate the coupling ball. However, do not do so if a stabiliser, which acts on the coupling ball, is being used to reduce snaking movements.

For trailers with low driving stability and trailers with a permitted gross vehicle weight of more than 1400 kg the use of a stabiliser is strongly recommended when driving above 80 km/h.

If the trailer starts snaking, drive more slowly, do not attempt to correct the steering and brake sharply if necessary.

When driving downhill, drive in the same gear as if driving uphill and drive at a similar speed.

Adjust tyre pressure to the value specified for full load ⇨ 267.

# Trailer towing

## Trailer loads

The permissible trailer loads are vehicle and engine-dependent maximum values which must not be exceeded. The actual trailer load is the difference between the actual gross weight of the trailer and the actual coupling socket load with the trailer coupled.

The permissible trailer loads are specified in the vehicle documents. In general, they are valid for gradients up to max. 12 %.

The permitted trailer load applies up to the specified incline and up to an altitude of 1000 metres above sea level. Since engine power decreases as altitude increases due to the air becoming thinner, therefore reducing climbing ability, the permissible gross train weight also decreases by 10 % for every 1000 metres of additional altitude. The gross train weight does not have to be reduced when driving on roads with slight inclines (less than 8 %, e.g. motorways).

The permissible gross train weight must not be exceeded. This weight is specified on the identification plate ⇨ 239.

## Vertical coupling load

The vertical coupling load is the load exerted by the trailer on the coupling ball. It can be varied by changing the weight distribution when loading the trailer.

The maximum permissible vertical coupling load (85 kg) is specified on the towing equipment identification plate and in the vehicle documents. Always aim for the maximum load, especially in the case of heavy trailers. The vertical coupling load should never fall below 25 kg.

## Rear axle load

When the trailer is coupled and the towing vehicle fully loaded, the permissible rear axle load (see identification plate or vehicle documents) may be exceeded by 90 kg for the 5-door Hatchback/4-door Saloon and 85 kg for the Sports Tourer, the gross vehicle weight rating may be exceeded by 65 kg for the 5-door Hatchback/4-door Saloon and 60 kg for the Sports Tourer. If the permissible rear axle load is exceeded, a maximum speed of 100 km/h applies.

# Towing equipment

| Caution |
| --- |
| The folding coupling ball bar cannot be removed from the vehicle. When driving without a trailer, fold in the coupling ball bar. |

**⚠ Warning**

Make sure that no one is in the pivot zone of the coupling ball bar. Risk of body injury.

When releasing the stowed coupling ball bar, make sure to stand left of the grip.

## Release stowed coupling ball bar

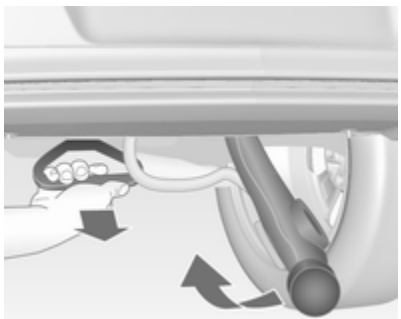

Pull the grip located left to the number plate under the rear bumper fascia at an angle of approx. 45° to the ground.

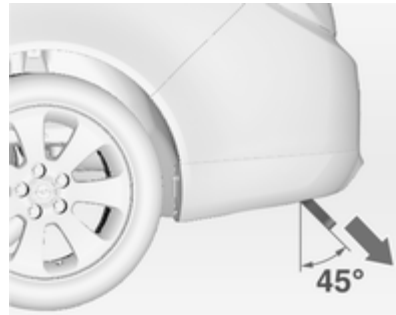


A buzzing tone sounds as a warning when the release handle is pulled out and the ball neck is disengaged.

Take the released coupling ball bar and raise it up until it engages.

Be sure to have the coupling ball bar correctly engaged and the released handle guided back to its hidden initial position, otherwise the buzzing tone will not stop.

## Stow/hide coupling ball bar

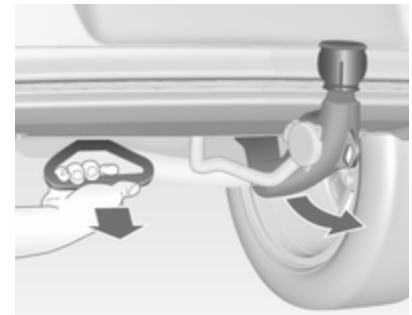

Pull the grip located left to the number plate under the rear bumper fascia at an angle of approx. 45° to the ground.

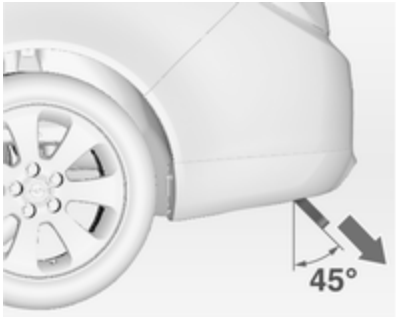


A buzzing tone sounds as a warning when the release handle is pulled out and the ball neck is disengaged.

With the flat of the hand, swivel the released coupling ball bar to the right until it engages under the floor. Make sure that the release handle is back in its hidden initial position, otherwise the buzzing tone will not stop.

**⚠ Warning**

Towing a trailer is permitted only when the coupling ball bar is fitted correctly. If the coupling ball bar does not engage correctly or if the release handle is impossible to guide to its hidden initial position in the housing or if the buzzing tone sounds after engaging the coupling ball bar, seek the assistance of a workshop.

**Eye for break-away stopping cable**

Attach break-away stopping cable to eye.

## Trailer stability assist

If the system detects snaking movements, engine power is reduced and the vehicle/trailer combination is selectively braked until the snaking ceases. While system is working keep steering wheel as still as possible.

Trailer stability assistant (TSA) is a function of the Electronic Stability Control ⇨ 154.

# Vehicle care

General Information ..... 191
Vehicle checks ..... 192
Bulb replacement ..... 199
Electrical system ..... 209
Vehicle tools ..... 215
Wheels and tyres ..... 216
Jump starting ..... 228
Towing ..... 230
Appearance care ..... 233

# General Information

## Accessories and vehicle modifications

We recommend to use genuine parts and accessories and factory approved parts specific for your vehicle type. We cannot assess or guarantee reliability of other products - even if they have a regulatory or otherwise granted approval.

Do not make any modifications to the electrical system, e.g. changes of electronic control units (chip tuning).

| Caution |
| --- |
| When transporting the vehicle on a train or on a recovery vehicle, the mud flaps might be damaged. |

# Vehicle storage

## Storage for a long period of time

If the vehicle is to be stored for several months:

- Wash and wax the vehicle.
- Have the wax in the engine compartment and underbody checked.
- Clean and preserve rubber seals.
- Fill up fuel tank completely.
- Change engine oil.
- Drain washer fluid reservoir.
- Check coolant antifreeze and corrosion protection.
- Adjust tyre pressure to the value specified for full load.
- Park vehicle in dry, well ventilated place. Engage first or reverse gear or set selector lever to **P**. Prevent the vehicle from rolling.
- Do not apply parking brake.

- Open bonnet, close all doors and lock the vehicle.
- Disconnect the clamp from the negative terminal of the vehicle battery. Beware that all systems are not functional, e.g. anti-theft alarm system.

### Putting back into operation

When the vehicle is to be put back into operation:

- Connect the clamp to the negative terminal of the vehicle battery. Activate the electronics of the power windows.
- Check tyre pressure.
- Fill up the washer fluid reservoir.
- Check the engine oil level.
- Check the coolant level.
- Fit the number plate if necessary.

## End-of-life vehicle recovery

Information on end-of-life vehicle recovery centres and the recycling of end-of-life vehicles is available on our website. Only entrust this work to an authorised recycling centre.

Gas vehicles must be recycled by a service centre authorised for gas vehicles.

# Vehicle checks

## Performing work

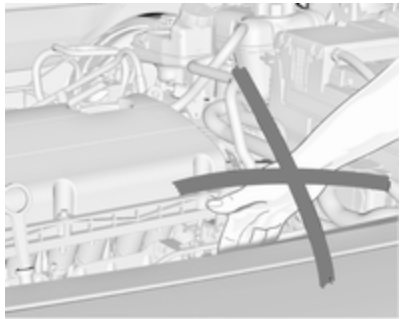

**⚠ Warning**

Only perform engine compartment checks when the ignition is off.

The cooling fan may start operating even if the ignition is off.

**⚠ Danger**

The ignition system and Xenon headlights use extremely high voltage. Do not touch.

# Bonnet

## Opening

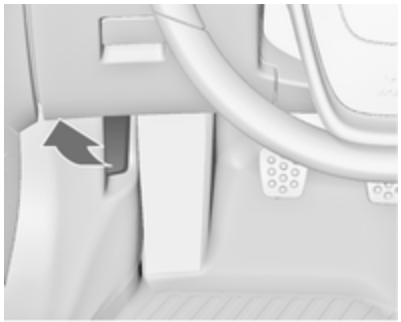

Pull the release lever and return it to its original position.

Push the safety catch to the right and open the bonnet.

The bonnet is held open automatically.

Air intake ⇨ 137.

If the bonnet is opened during an Autostop, the engine will be restarted automatically for safety reasons.

## Closing

Lower the bonnet and allow it to drop into the catch. Check that the bonnet is engaged.

# Engine oil

Check the engine oil manually on a regular basis to prevent damage to the engine. Ensure that the correct specification of oil is used. Recommended fluids and lubricants ⇨ 237.

Check with the vehicle on a level surface. The engine must be at operating temperature and switched off for at least 5 minutes.

Pull out the dipstick, wipe it clean, insert it to the stop on the handle, pull out and read the engine oil level.

Insert dipstick to the stop on the handle and make half a turn.

**Caution**

It is the owner's responsibility to maintain the proper level of an appropriate quality oil in the engine.

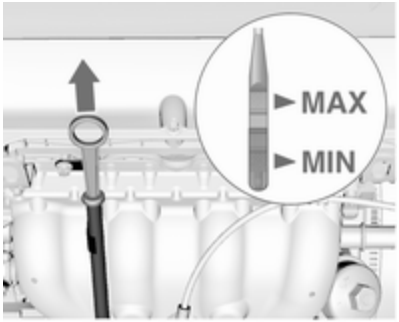


Different dipsticks are used depending on engine variant.

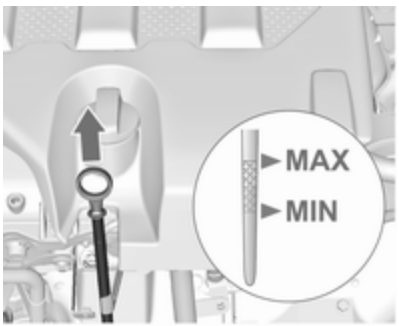


When the engine oil level has dropped to the **MIN** mark, top up engine oil.

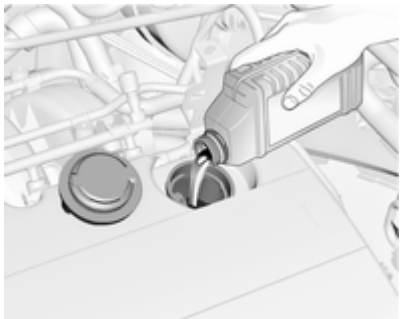

We recommend the use of the same grade of engine oil that was used at last change.

The engine oil level must not exceed the **MAX** mark on the dipstick.

| Caution |
| --- |
| Overfilled engine oil must be drained or suctioned out. |

Capacities ⇨ 266, Engine oil quality/ viscosity ⇨ 237.

Fit the cap on straight and tighten it.

## Engine coolant

The coolant provides freeze protection down to approx. -28 °C.

| Caution |
| --- |
| Only use approved antifreeze. |

### Coolant level

| Caution |
| --- |
| Too low a coolant level can cause engine damage. |

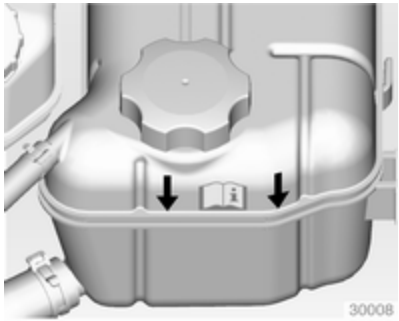


If the cooling system is cold, the coolant level should be above the filling line mark. Top up if the level is low.

On another version the filling line mark is inside the filler opening. To check open the cap.

**Additional cooling circuit for Turbo engine**

Coolant container is fixed at the air cleaner housing.

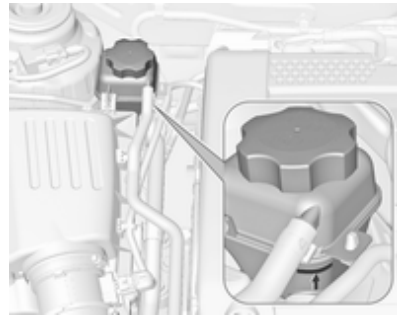

If the cooling system is cold, the coolant level should be above the filling line mark. Top up if the level is low.

## General

**⚠Warning**

Allow the engine to cool before opening the cap. Carefully open the cap, relieving the pressure slowly.

To top up use a 1:1 mixture of released coolant concentrate mixed with clean tap water. If no coolant concentrate is available, use clean tap water. Install the cap tightly. Have the coolant concentration checked and have the cause of the coolant loss remedied by a workshop.

## Washer fluid

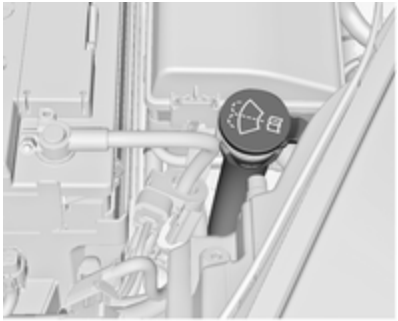

Fill with clean water mixed with a suitable quantity of washer fluid which contains antifreeze. For the correct mixing ratio refer to the washer fluid container.

| Caution |
| --- |
| Only washer fluid with a sufficient antifreeze concentration provides protection at low temperatures or a sudden drop in temperature. |

## Brakes

In the event of minimum thickness of the brake lining, a squealing noise sounds during braking.

Continued driving is possible but have the brake lining replaced as soon as possible.

Once new brake linings are installed, do not brake unnecessarily hard for the first few journeys.

## Brake fluid

| ⚠ Warning |
| --- |
| Brake fluid is poisonous and corrosive. Avoid contact with eyes, skin, fabrics and painted surfaces. |

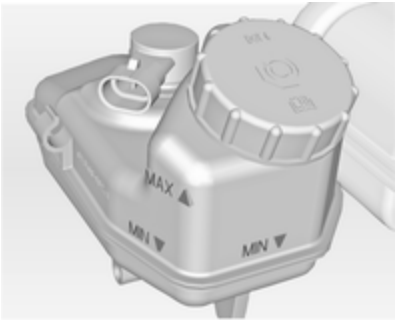


The brake fluid level must be between the **MIN** and the **MAX** marks.

Only use high-performance brake fluid approved for the vehicle, consult a workshop ⇨ 237.

## Battery

The vehicle battery is maintenance-free provided that the driving profile allows sufficient charging of the battery. Short-distance-driving and frequent engine starts can discharge the battery. Avoid the use of unnecessary electrical consumers.

Batteries do not belong in household waste. They must be disposed of at an appropriate recycling collection point.

Laying up the vehicle for more than 4 weeks can lead to battery discharge. Disconnect the clamp from the negative terminal of the vehicle battery.

Ensure the ignition is switched off before connecting or disconnecting the vehicle battery.

Battery discharge protection ⇨ 127.

## Replacing the battery

**Note**
Any deviation from the instructions given in this paragraph may lead to a temporary deactivation of the stop-start system.

When the battery is being replaced, please ensure that there are no open ventilation holes in the vicinity of the positive terminal. If a ventilation hole is open in this area, it must be closed off with a dummy cap, and the ventilation in the vicinity of the negative terminal must be opened.

Only use batteries that allow the fuse box to be mounted above the battery.

In vehicles with stop-start system, ensure to have the AGM (Absorptive Glass Mat) battery replaced with an AGM battery again.

An AGM battery can be identified by the label on the battery. We recommend the use of an original Opel battery.

**Note**
Using an AGM battery different from the original Opel battery might result in a lower performance of the stop-start system.

We recommend that you have the battery replaced by a workshop.

Stop-start system ⇨ 140.

## Charging the battery

**⚠ Warning**

On vehicles with stop-start system, ensure that the charging potential does not exceed 14.6 volts when using a battery charger. Otherwise the battery might be damaged.

Jump starting ⇨ 228.

## Warning label

Meaning of symbols:

- No sparks, naked flames or smoking.
- Always shield eyes. Explosive gases can cause blindness or injury.
- Keep the battery out of reach of children.
- The battery contains sulfuric acid which could cause blindness or serious burn injuries.
- See the Owner's Manual for further information.
- Explosive gas may be present in the vicinity of the battery.

## Diesel fuel system bleeding

If the tank has been run dry, the diesel fuel system must be bled. Switch on the ignition three times for 15 seconds at a time. Then crank the engine for a maximum of 40 seconds. Repeat this process after no less than 5 seconds. If the engine fails to start, seek the assistance of a workshop.

## Wiper blade replacement

### Wiper blades on the windscreen

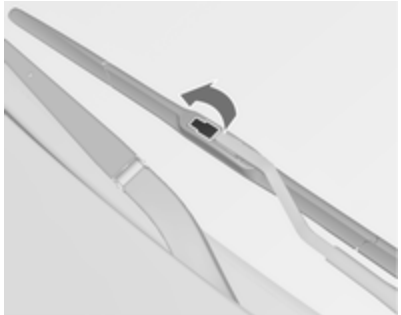

Lift the wiper arm, open the retaining clip.

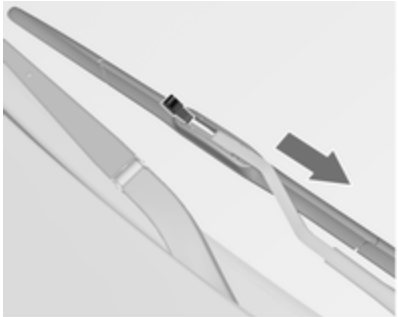

Disengage the wiper blade and remove.

### Wiper blade on the rear window

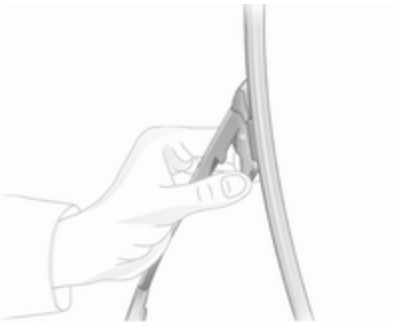

Lift the wiper arm, press the two catches on the arm, disengage the wiper blade and remove.

## Bulb replacement

Switch off the ignition and switch off the relevant switch or close the doors.

Only hold a new bulb at the base! Do not touch the bulb glass with bare hands.

Use only the same bulb type for replacement.

Replace headlight bulbs from within the engine compartment.

### Halogen headlights

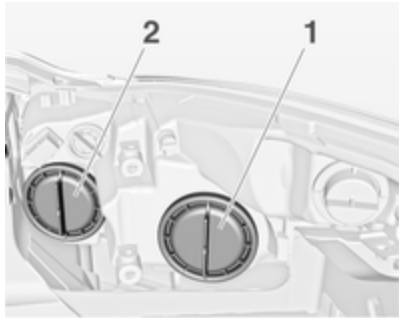

Headlights have separate systems for high beam **2** (inner bulbs) and low beam **1** (outer bulbs).

## Low beam/Daytime running light

1. Rotate cap **1** anti-clockwise and remove.

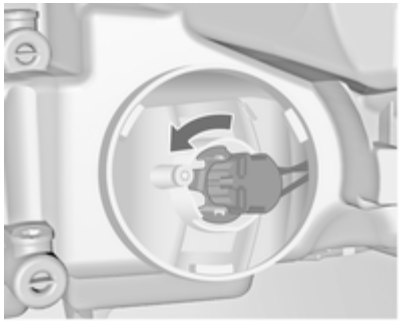

2. Rotate lamp support anti-clockwise to disengage. Withdraw the lamp support from the reflector.

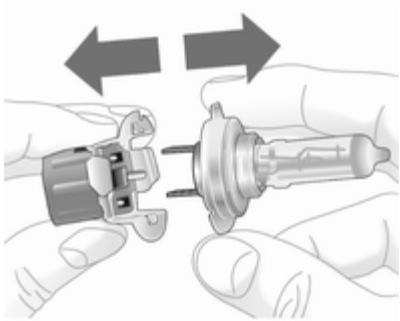

3. Detach bulb from lamp support and renew the bulb.
4. Insert the lamp support, engaging the two lugs into the reflector and rotate clockwise to secure.
5. Rotate bulb carrier clockwise as far as it will go.
6. Fit cap and rotate clockwise.

## High beam

1. Rotate cap **2** anti-clockwise and remove.
2. Detach wiring connector from bulb.

3. Disengage spring clip from retainer by pressing forward and then swing downwards.
4. Withdraw bulb from reflector housing.
5. When installing the new bulb, insert lugs in the reflector recesses and engage the spring clip.
6. Install the wiring plug onto bulb.
7. Fit cap and rotate clockwise.

## Sidelight

1. Rotate cap anti-clockwise and remove.

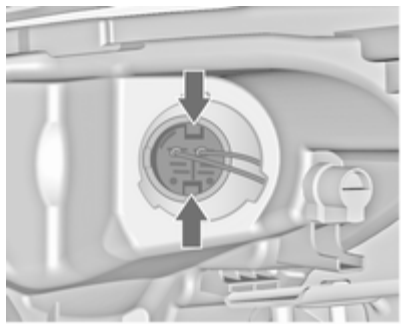

2. Press latches and withdraw lamp support from reflector.

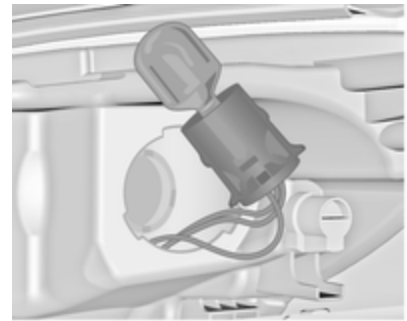

3. Remove bulb from socket and renew bulb.
4. Insert holder in reflector. Fit cap and rotate clockwise.

## Front turn light

1. Rotate lamp support anti-clockwise and disengage.

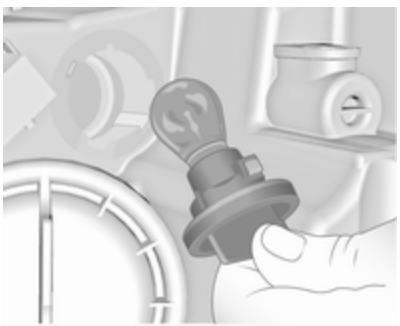

2. Push bulb into socket slightly, rotate anti-clockwise, remove and renew bulb.
3. Insert lamp support in reflector, rotate clockwise to engage.

## Xenon headlights

**⚠ Danger**

Xenon headlights work under extremely high electrical voltage. Do not touch. Have bulbs replaced by a workshop.

## Front turn signal

1. Rotate lamp support anti-clockwise and disengage.

2. Push bulb into socket slightly, rotate anti-clockwise, remove and renew bulb.
3. Insert lamp support in reflector, rotate clockwise to engage.

### Sidelights

Sidelights are designed as LEDs. In case of defective have LEDs replaced by a workshop.

## Fog lights

The bulbs are accessible from beneath the vehicle.

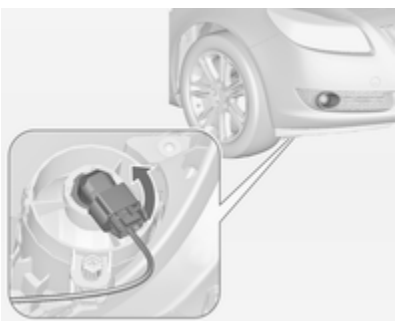

1. Turn the bulb holder anti-clockwise and remove it from the reflector.

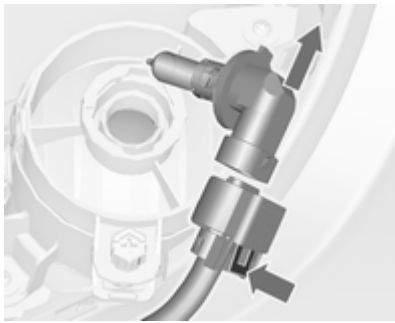

2. Disengage the bulb holder from the plug connector by pressing the retaining lug.
3. Remove and replace the bulb holder with bulb.
4. Attach the plug connector.
5. Insert the bulb holder into the reflector.
6. Turn the bulb holder clockwise and engage.

## Tail lights

### 5-door Hatchback/4-door Saloon

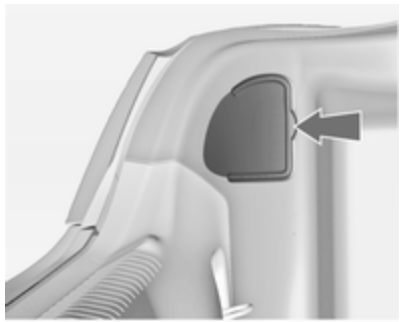

1. Release cover and remove.

2. Unscrew two plastic securing nuts from the inside by hand.

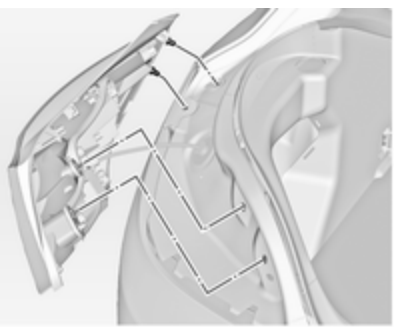

3. Remove tail light assembly. Take care that the cable duct remains in position.

   Detach wiring plug from bulb holder.

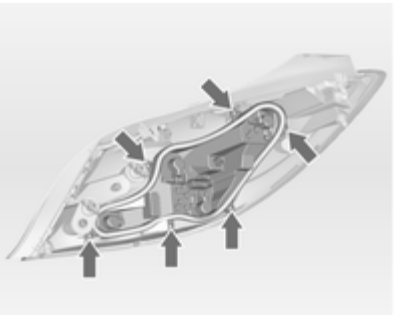

4. Unscrew the screws and remove bulb holder.

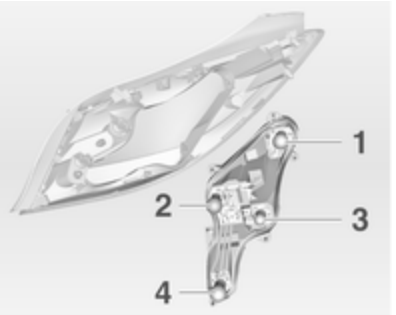


5. Push bulb into socket slightly, rotate anti-clockwise, remove and renew bulb.

   Tail light/brake light (**1**)

   Turn signal light (**2**)

   Tail light (**3**)

   Reverse light / Rear fog light, may be only on one side (**4**)

6. Insert bulb holder into the tail light assembly and screw into place. Connect wiring plug. Install tail

light assembly in body and tighten securing nuts. Close cover and engage.

7. Switch on ignition, operate and check all lights.

## Sports Tourer

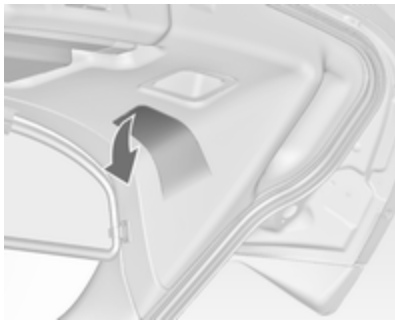

1. Release and open the cover in the tailgate.

2. Unscrew three plastic securing nuts by hand.

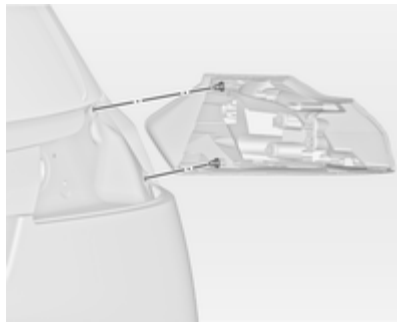

3. Remove tail light assembly. Take care that the cable duct remains in position.

   Detach wiring plug from bulb holder.

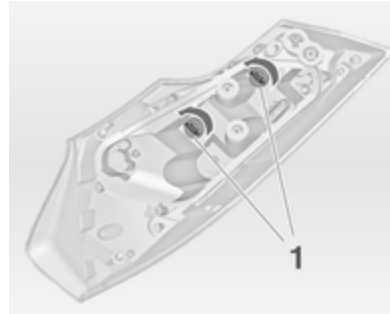


4. The tail lights consist of two bulbs. To change one of the bulbs, rotate plastic nut (**1**) anticlockwise and remove it from the bulb holder.

   Push bulb into socket slightly, rotate anti-clockwise, remove and renew bulb. Insert plastic nut into bulb holder and rotate clockwise.

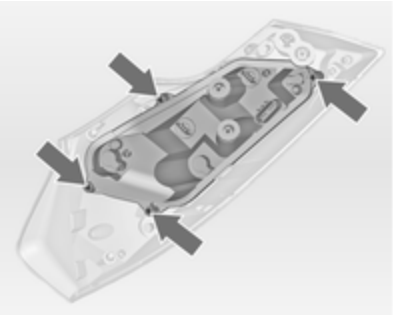

5. To change the other lights, unscrew the screws and remove bulb holder.

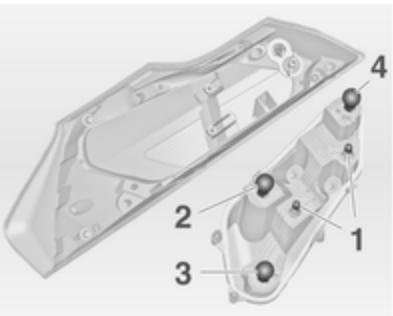


6. Push bulb into socket slightly, rotate anti-clockwise, remove and renew bulb.

   Tail light (**1**)

   Turn signal light (**2**)

   Brake light (**3**)

   Reverse light / Rear fog light, may be only on one side (**4**)
7. Insert bulb holder into the tail light assembly and screw into place. Connect wiring plug. Install tail light assembly in tailgate and tighten securing nuts. Close cover and engage.
8. Switch on ignition, operate and check all lights.

### Additional tail lights in the tailgate frame

1. Open tailgate.

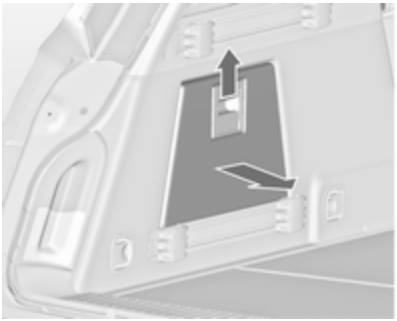

2. Release cover in side trim panel and remove.

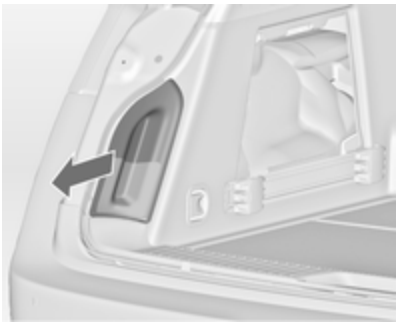

3. Press out lamp housing from the inside of the side trim panel.

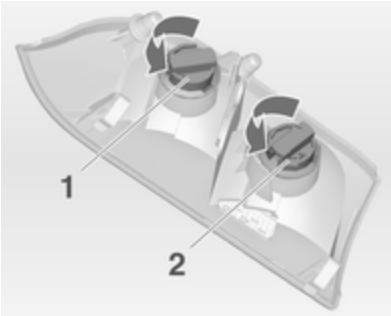


4. Rotate plastic nut anticlockwise and remove from the bulb holder.
5. Push bulb into socket slightly, rotate anti-clockwise, remove and renew bulb. Insert plastic nut into bulb holder by rotating clockwise.

   Tail light (**1**)

   Turn signal light (**2**)
6. Insert bulb holder into the tailgate frame. Close cover in the side trim panel.

## Side turn signal lights

Have bulbs replaced by a workshop.

## Number plate light

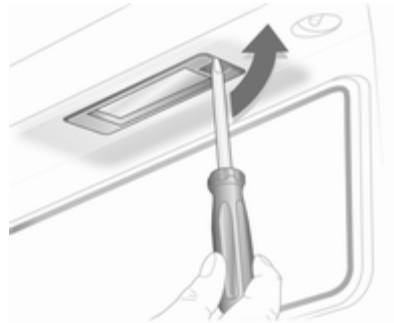

1. Insert screwdriver in bulb housing, press to the side and release spring.

2. Remove bulb housing downwards, taking care not to pull on the cable.
3. Lift flap and disconnect wiring plug from bulb holder.

4. Rotate bulb holder anti-clockwise to disengage.
5. Remove bulb from holder and renew bulb.
6. Insert bulb holder in bulb housing and rotate clockwise.
7. Connect wiring plug to bulb holder.
8. Insert and engage bulb housing.

# Interior lights

## Courtesy light, reading lights

Have bulbs replaced by a workshop.

## Load compartment light

1. Prise the lamp out with a screwdriver.

2. Press bulb slightly towards spring clip and remove.
3. Insert new bulb.
4. Install lamp.

# Instrument panel illumination

Have bulbs replaced by a workshop.

# Electrical system

## Fuses

Data on the replacement fuse must match the data on the defective fuse.

There are three fuse boxes in the vehicle:

- in the front left of the engine compartment,
- in left-hand drive vehicles, in the interior behind the storage compartment, or, in right-hand drive vehicles, behind the glovebox,
- behind a cover on the left side of the load compartment.

Before replacing a fuse, turn off the respective switch and the ignition.

A blown fuse can be recognized by its melted wire. Do not replace the fuse until the cause of the fault has been remedied.

Some functions are protected by several fuses.

Fuses may also be inserted without existence of a function.

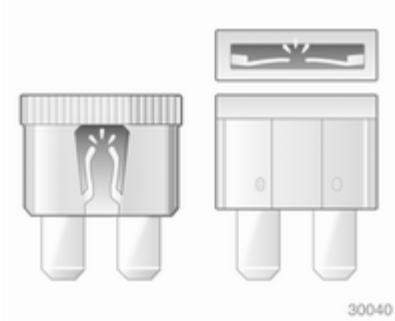

### Fuse extractor

A fuse extractor may be located in the fuse box in the engine compartment.

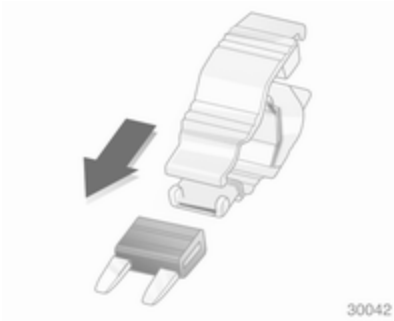


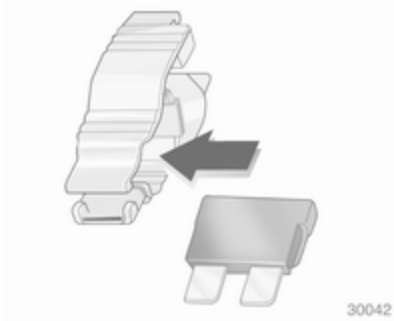

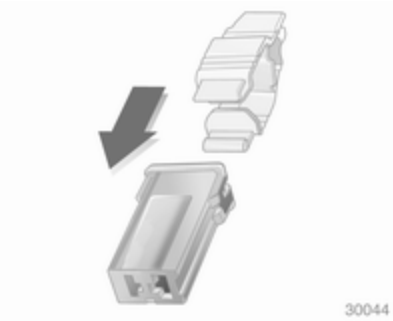


Place the fuse extractor on the various types of fuse from the top or side, and withdraw fuse.

## Engine compartment fuse box

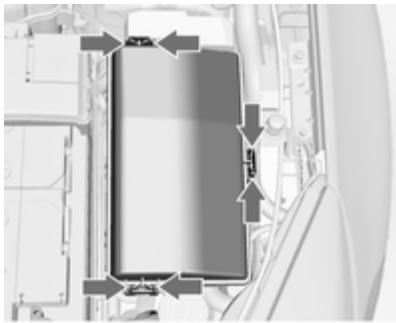

The fuse box is in the front left of the engine compartment.

Disengage the cover, lift it upwards and remove.

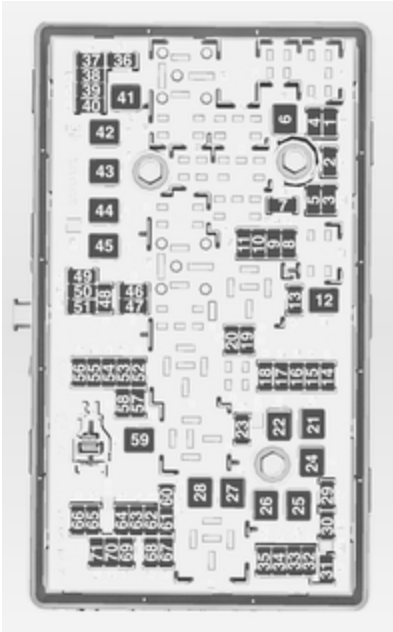

| No. | Circuit |
|---|---|
| 1 | Transmission control module |
| 2 | Engine control module |
| 3 | – |
| 4 | – |
| 5 | Ignition, Transmission control module, Engine control module |
| 6 | Windscreen wiper |
| 7 | – |
| 8 | Fuel injection, ignition system |
| 9 | Fuel injection, ignition system |
| 10 | Engine control module |
| 11 | Lambda probe |
| 12 | Starter |
| 13 | Sensor throttle heating |
| 14 | Lighting |
| 15 | Rear window wiper |

| No. | Circuit |
|---|---|
| 16 | Vacuum pump, mass air flow meter, water in fuel sensor, DC transformer |
| 17 | Ignition, Airbag |
| 18 | Adaptive forward lighting |
| 19 | Adaptive forward lighting |
| 20 | Fuel pump |
| 21 | Rear power windows |
| 22 | ABS |
| 23 | Variable effort steering |
| 24 | Front power windows |
| 25 | Power outlets |
| 26 | ABS |
| 27 | Electrical parking brake |
| 28 | Heated rear window |
| 29 | Left power seat |
| 30 | Right power seat |

| No. | Circuit |
|---|---|
| 31 | Air conditioning system |
| 32 | Body control module |
| 33 | Heated front seats |
| 34 | Sunroof |
| 35 | Infotainment system |
| 36 | – |
| 37 | Right high beam |
| 38 | Left high beam |
| 39 | – |
| 40 | – |
| 41 | Vacuum pump |
| 42 | Radiator fan |
| 43 | Battery, DC transformer (only on vehicles with stop-start system) |
| 44 | Headlamp washer system |
| 45 | Radiator fan |

| No. | Circuit |
|---|---|
| 46 | Terminal 87, main relay |
| 47 | Lambda probe |
| 48 | Fog lights |
| 49 | Right low beam |
| 50 | Left low beam |
| 51 | Horn |
| 52 | Ignition |
| 53 | Ignition, ventilated front seats |
| 54 | Ignition |
| 55 | Power windows, mirror folding |
| 56 | Windscreen washer |
| 57 | – |
| 58 | – |
| 59 | Diesel fuel heating, emission control system |
| 60 | Mirror heating |
| 61 | Mirror heating |

| No. | Circuit |
|---|---|
| 62 | – |
| 63 | Rear window sensor |
| 64 | Adaptive forward lighting |
| 65 | Auxiliary pump (only on vehicles with stop-start system) |
| 66 | Rear window washer system |
| 67 | Fuel system control module |
| 68 | – |
| 69 | Battery sensor |
| 70 | Rain sensor |
| 71 | Battery sensor |

After changing of defective fuses close the fuse box cover and press until it engages.

If the fuse box cover is not closed correctly, malfunctions may occur.

## Instrument panel fuse box

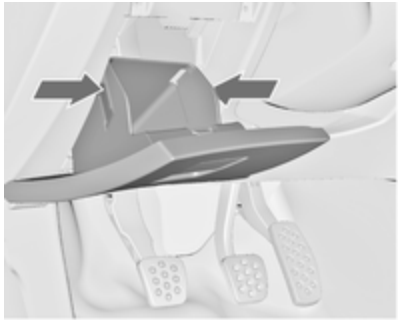

In left-hand drive vehicles, the fuse box is behind the storage compartment in the instrument panel.

Open compartment, compress the locking tabs, fold compartment down and remove.

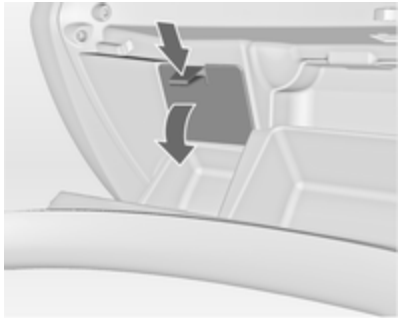

In right-hand drive vehicles, the fuse box is located behind a cover in the glovebox. Open the glovebox and remove the cover.

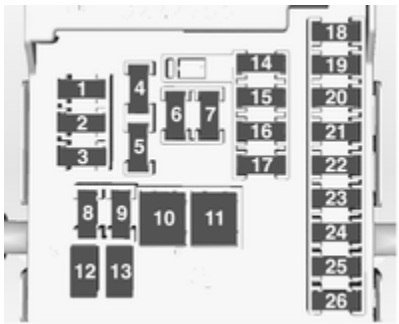


| No. | Circuit |
|---|---|
| 1 | Infotainment system, Info display |
| 2 | Body control unit |
| 3 | Body control unit |
| 4 | Infotainment system, Info display |
| 5 | Infotainment system, Info display |
| 6 | Cigarette lighter |
| 7 | Power outlet |
| 8 | Body control unit |
| 9 | Body control unit |
| 10 | Body control unit |
| 11 | Interior fan |
| 12 | – |
| 13 | – |
| 14 | Diagnostic connector |
| 15 | Airbag |

| No. | Circuit |
|---|---|
| 16 | Central locking system, tailgate |
| 17 | Air conditioning system |
| 18 | Transportation fuse |
| 19 | Memory |
| 20 | – |
| 21 | Instrument |
| 22 | Ignition |
| 23 | Body control unit |
| 24 | Body control unit |
| 25 | – |
| 26 | Power outlet load compartment |

Power seats, No's. 12 and 13, have an overload protection. The circuit will be closed again after cooling down.

## Load compartment fuse box

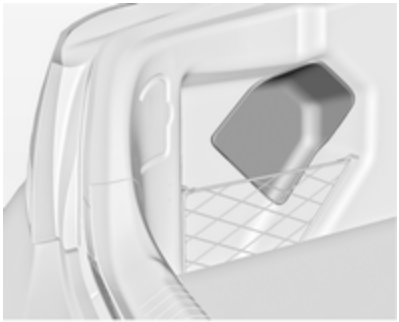

The fuse box is on the left side of the load compartment behind a cover. Remove the cover.

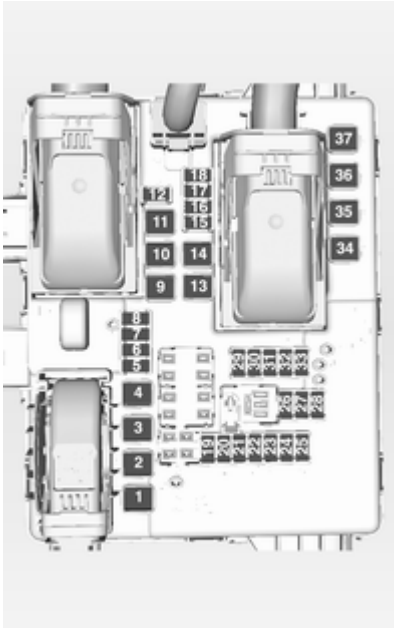


| No. | Circuit |
|---|---|
| 1 | Central locking system, Power tailgate |
| 2 | Trailer module |
| 3 | Trailer module |
| 4 | – |
| 5 | Trailer socket |
| 6 | Steering wheel heating |
| 7 | Rear power windows |
| 8 | Trailer socket |
| 9 | Sunroof |
| 10 | Central locking system, tailgate |
| 11 | – |
| 12 | Air conditioning system |
| 13 | – |
| 14 | – |
| 15 | Power tailgate lock |
| 16 | Air conditioning system |

| No. | Circuit |
|---|---|
| 17 | – |
| 18 | Power tailgate lock |
| 19 | Side obstacle detector |
| 20 | Side obstacle detector, ventilated front seats |
| 21 | Active damping system, High beam assist, Cruise control, Traffic sign assistant, Lane departure warning, trailer module |
| 22 | Anti-theft alarm system |
| 23 | All-wheel drive, anti-theft alarm system |
| 24 | Sidelight left |
| 25 | Sidelight right |
| 26 | – |
| 27 | – |
| 28 | – |

| No. | Circuit |
|---|---|
| 29 | Trailer module, transportation fuse |
| 30 | Side obstacle detector |
| 31 | Active damping system, High beam assist, Cruise control, Traffic sign assistant, Lane departure warning |
| 32 | Side obstacle detector |
| 33 | All-wheel drive |
| 34 | Sunroof |
| 35 | – |
| 36 | – |
| 37 | – |

# Vehicle tools

## Tools

### Vehicles with tyre repair kit

The tools and the towing eye are located together with the tyre repair kit in a tool box below the floor cover in the load compartment.

### Vehicles with spare wheel

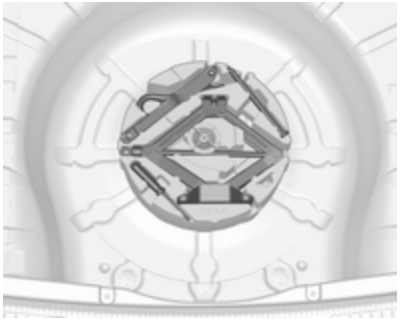

The jack with wheel wrench, the tools, an extension bolt for securing a damaged wheel and the towing eye are placed in the tool box below the spare wheel in the load compartment. Spare wheel ⇨ 226.

# Wheels and tyres

## Tyre condition, wheel condition

Drive over edges slowly and at right angles if possible. Driving over sharp edges can cause tyre and wheel damage. Do not trap tyres on the kerb when parking.

Regularly check the wheels for damage. Seek the assistance of a workshop in the event of damage or unusual wear.

## Tyres

Tyres of size

235/45 R 18

are only to be used as winter tyres.

## Winter tyres

Winter tyres improve driving safety at temperatures below 7 °C and should therefore be fitted on all wheels.

In accordance with country-specific regulations, affix the speed sticker in the driver's field of view.

## Tyre designations

E.g. **215/60 R 16 95 H**

**215** = Tyre width, mm
**60** = Cross-section ratio (tyre height to tyre width), %
**R** = Belt type: Radial
**RF** = Type: RunFlat
**16** = Wheel diameter, inches
**95** = Load index e.g. 95 is equivalent to 690 kg
**H** = Speed code letter

Speed code letter:

**Q** = up to 160 km/h
**S** = up to 180 km/h
**T** = up to 190 km/h
**H** = up to 210 km/h
**V** = up to 240 km/h
**W** = up to 270 km/h

## Tyre pressure

Check the pressure of cold tyres at least every 14 days and before any long journey. Do not forget the spare wheel. This also applies to vehicles with tyre pressure monitoring system.

Unscrew the valve cap.

Tyre pressure ⇨ 267 and on the label on the front left or right door frame.

The tyre pressure data refers to cold tyres. It applies to summer and winter tyres.

Always inflate the spare tyre to the pressure specified for full load.

The ECO tyre pressure serves to achieve the smallest amount of fuel consumption possible.

Incorrect tyre pressures will impair safety, vehicle handling, comfort and fuel economy and will increase tyre wear.

**⚠Warning**

If the pressure is too low, this can result in considerable tyre warm-up and internal damage, leading to tread separation and even to tyre blow-out at high speeds.

If the tyre pressure must be reduced or increased on a vehicle with tyre pressure monitoring system, switch off ignition.

## Tyre pressure monitoring system

The tyre pressure monitoring system checks the pressure of all four wheels once a minute when vehicle speed exceeds a certain limit.

All wheels must be equipped with pressure sensors and the tyres must have the prescribed pressure.

The current tyre pressures can be shown in the **Vehicle Information Menu** in the Driver Information Centre.

The menu can be selected by the buttons on the turn signal lever.

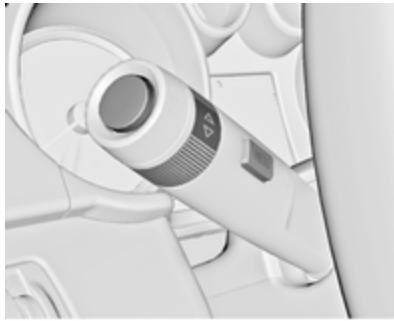

Press the **MENU** button to select the **Vehicle Information Menu**.

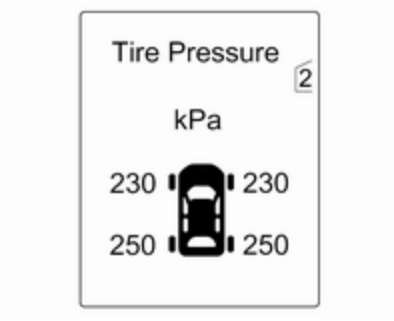


Turn the adjuster wheel to select the tyre pressure monitoring system.

System status and small pressure differences are displayed by a warning message with the corresponding tyre flashing in the Driver Information Centre.

Furthermore considerable pressure differences between the tyres on one axle are displayed by a warning message in the Driver Information Centre.

Major pressure differences are indicated additionally by the control indicator (!).

Control indicator (!) ⇨ 96.

Vehicle messages ⇨ 106.

If the tyre pressure shall be reduced or increased, switch off ignition.

If a complete set of wheels without sensors is mounted (e.g. four winter tyres), a message is displayed in the Driver Information Centre. The tyre pressure monitoring system is not operational. Retrofitting of sensors is possible.

A spare wheel or temporary spare wheel is not equipped with pressure sensors. The tyre pressure monitoring system is not operational for these wheels. Control indicator (!) illuminates. For the further three wheels the system remains operational.

The use of commercially available liquid tyre repair kits can impair the function of the system. Factory approved repair kits can be used.

External high-power radio equipment could disrupt the tyre pressure monitoring system.

The tyre pressure monitoring system valve cores and sealing rings must be replaced each time the tyres are changed.

## Adaptive threshold function

The tyre pressure monitoring system automatically detects if the vehicle is driven with a tyre pressure appropriate for a load of up to 3 people or for a full load.

If the tyre pressure shall be reduced, switch off ignition before reducing.

## Auto learn function

After changing wheels the vehicle has to be stationary for approx. 20 minutes, before the system recalculates. The following relearn process takes up to 10 minutes of driving with a speed of minimum 20 km/h. In this case – – can be displayed or pressure values can swap in the Driver Information Centre.

If problems occur during the relearn process a warning message is displayed in the Driver Information Centre.

### Temperature compensation

Cold tyres decrease the tyre pressure, warm tyres increase the tyre pressure. The tyre pressure monitoring system considers this effect for the warning messages.

The tyre pressure value displayed in the Driver Information Centre shows the actual tyre pressure. Therefore it is important to check tyre pressure with cold tyres.

## Tread depth

Check tread depth at regular intervals.

Tyres should be replaced for safety reasons at a tread depth of 2-3 mm (4 mm for winter tyres).

For safety reasons, it is recommended that the tread depth of the tyres on one axle should not vary by more than 2 mm.

The legally permissible minimum tread depth (1.6 mm) has been reached when the tread has worn down as far as one of the tread wear indicators (TWI). Their position is indicated by markings on the sidewall.

If there is more wear at the front than the rear, swap round front wheels and rear wheels periodically. Ensure that the direction of rotation of the wheels remains the same.

Tyres age, even if they are not used. We recommend tyre replacement every 6 years.

## Changing tyre and wheel size

If tyres of a different size than those fitted at the factory are used, it may be necessary to reprogramme the speedometer as well as the nominal tyre pressure and make other vehicle modifications.

After converting to a different tyre size, have the label with tyre pressures replaced.

**⚠ Warning**

Use of unsuitable tyres or wheels may lead to accidents and will invalidate the vehicle type approval.

## Wheel covers

Wheel covers and tyres that are factory approved for the respective vehicle and comply with all of the relevant wheel and tyre combination requirements must be used.

If the wheel covers and tyres used are not factory approved, the tyres must not have a rim protection ridge.

Wheel covers must not impair brake cooling.

| ⚠Warning |
| --- |
| Use of unsuitable tyres or wheel covers could lead to sudden pressure loss and thereby accidents. |

### Wheel caps

Tyres of size 245/35 R20 have a specific wheel cap. To remove the cap from the dismantled wheel first disengage the arms one by one. Then press the cap in the middle area from behind and remove it.

To assemble first adjust the wheel cap in order that the positioning leg fits into the recess.

## Tyre chains

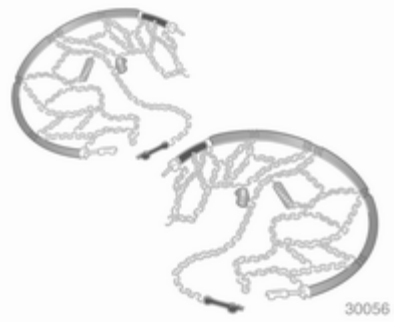


Tyre chains are only permitted on the front wheels.

Always use fine mesh chains that add no more than 10 mm to the tyre tread and the inboard sides (including chain lock).

| ⚠Warning |
| --- |
| Damage may lead to tyre blowout. |

Tyre chains are only permitted on tyres of size 205/60 R 16, 215/55 R 17, 215/60 R 16, 225/45 R 18, 225/50 R 17 and 235/45 R 18.

Tyre chains are not permitted on tyres of size 225/55 R 17, 245/45 R 18, 245/40 R 19, 245/35 R 20 and 255/35 R 20.

The use of tyre chains is not permitted on the temporary spare wheel.

## Tyre repair kit

Minor damage to the tyre tread can be repaired with the tyre repair kit.

Do not remove foreign bodies from the tyres.

Tyre damage exceeding 4 mm or that is at tyre's side wall cannot be repaired with the tyre repair kit.

**⚠ Warning**

Do not drive faster than 80 km/h.

Do not use for a lengthy period.

Steering and handling may be affected.

If you have a flat tyre:

Apply the parking brake and engage first gear, reverse gear or **P**.

The tyre repair kit is in a compartment under the floor cover in the load compartment.

1. Take the tyre repair kit from the compartment.
2. Remove the compressor.

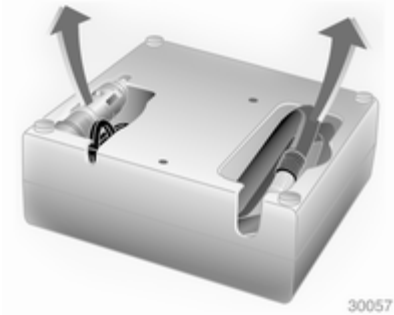


3. Remove the electrical connection cable and air hose from the stowage compartments on the underside of the compressor.

4. Screw the compressor air hose to the connection on the sealant bottle.
5. Fit the sealant bottle into the retainer on the compressor.

   Set the compressor near the tyre in such a way that the sealant bottle is upright.

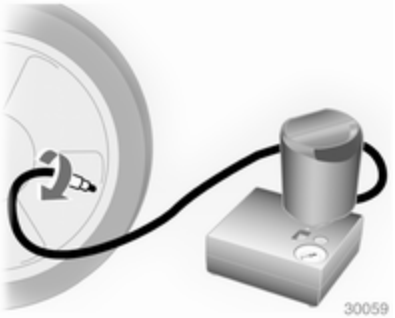


6. Unscrew valve cap from defective tyre.
7. Screw the filler hose to the tyre valve.
8. The switch on the compressor must be set to O.
9. Connect the compressor plug to the power outlet or cigarette lighter socket.

   To avoid discharging the battery, we recommend running the engine.

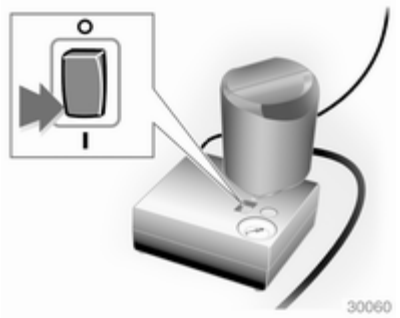


10. Set the rocker switch on the compressor to I. The tyre is filled with sealant.
11. The compressor pressure gauge briefly indicates up to 6 bar whilst the sealant bottle is emptying (approx. 30 seconds). Then the pressure starts to drop.
12. All of the sealant is pumped into the tyre. Then the tyre is inflated.
13. The prescribed tyre pressure should be obtained within 10 minutes. Tyre pressure ⇨ 267. When the correct pressure is obtained, switch off the compressor.

If the prescribed tyre pressure is not obtained within 10 minutes, remove the tyre repair kit. Move the vehicle one tyre rotation. Reattach the tyre repair kit and continue the filling procedure for 10 minutes. If the prescribed tyre pressure is still not obtained, the tyre is too badly damaged. Seek the assistance of a workshop.

Drain excess tyre pressure with the button over the pressure indicator.

Do not run the compressor longer than 10 minutes.

14. Detach the tyre repair kit. Push catch on bracket to remove sealant bottle from bracket. Screw tyre inflation hose to the free connection of sealant bottle. This prevents sealant from escaping. Stow tyre repair kit in load compartment.
15. Remove any excess sealant using a cloth.
16. Take the label indicating maximum permitted speed from the sealant bottle and affix in the driver's field of view.
17. Continue driving immediately so that sealant is evenly distributed in the tyre. After driving approx. 10 km (but no more than 10 minutes), stop and check tyre pressure. Screw compressor air hose directly onto tyre valve and compressor when doing this.

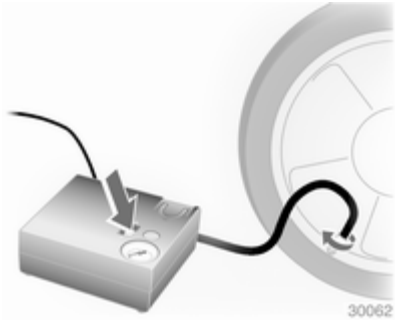


If tyre pressure is more than 1.3 bar, set it to the correct value. Repeat the procedure until there is no more loss of pressure.

If the tyre pressure has fallen below 1.3 bar, the vehicle must not be used. Seek the assistance of a workshop.

18. Stow away tyre repair kit in load compartment.

**Note**
The driving characteristics of the repaired tyre is severely affected, therefore have this tyre replaced.

If unusual noise is heard or the compressor becomes hot, turn compressor off for at least 30 minutes.

The built-in safety valve opens at a pressure of 7 bar.

Note the expiry date of the kit. After this date its sealing capability is no longer guaranteed. Pay attention to storage information on sealant bottle.

Replace the used sealant bottle. Dispose of the bottle as prescribed by applicable laws.

The compressor and sealant can be used from approx. -30 °C.

The adapters supplied can be used to pump up other items e.g. footballs, air mattresses, inflatable dinghies etc. They are located on the underside of the compressor. To remove, screw on compressor air hose and withdraw adapter.

## Wheel changing

Some vehicles are equipped with a tyre repair kit instead of a spare wheel ⇨ 220.

Make the following preparations and observe the following information:

- Park the vehicle on a level, firm and non-skid surface. The front wheels must be in the straight-ahead position.
- Apply the parking brake and engage first gear, reverse gear or **P**.
- Remove the spare wheel ⇨ 226.
- Never change more than one wheel at once.
- Use the jack only to change wheels in case of puncture, not for seasonal winter or summer tyre change.
- If the ground on which the vehicle is standing is soft, a solid board (max. 1 cm thick) should be placed under the jack.
- No people or animals may be in the vehicle when it is jacked-up.
- Never crawl under a jacked-up vehicle.
- Do not start the vehicle when it is raised on the jack.
- Clean wheel nuts and thread with a clean cloth before mounting the wheel.

**⚠ Warning**

Do not grease wheel bolt, wheel nut and wheel nut cone.

1. Disengage wheel nut caps with a screwdriver and remove. Pull off the wheel cover with the hook. Vehicle tools ⇨ 215.

   Alloy wheels: Disengage wheel nut caps with a screwdriver and remove. To protect the wheel, place a soft cloth between the screwdriver and the alloy wheel.

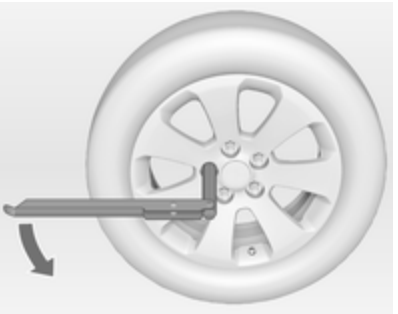

2. Fold out the wheel wrench and install ensuring that it locates securely and loosen each wheel nut by half a turn.

3. Ensure the jack is correctly positioned under the relevant vehicle jacking point.

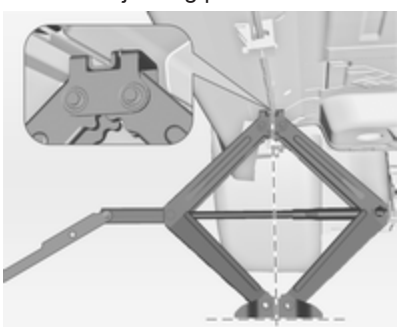

4. Set the jack to the necessary height. Position it directly below the jacking point in a manner that prevents it from slipping.

Attach wheel wrench and with the jack correctly aligned rotate wheel wrench until wheel is clear of the ground.

5. Unscrew the wheel nuts.
6. Change the wheel. Spare wheel ⇨ 226
7. Screw on the wheel nuts.
8. Lower vehicle.
9. Install the wheel wrench ensuring that it locates securely and tighten each nut in a crosswise sequence. Tightening torque is 150 Nm.
10. Align the valve hole in the wheel cover with the tyre valve before installing.

    Install wheel nut caps.

    Install vehicle jacking point cover.
11. Stow the replaced wheel ⇨ 226 and the vehicle tools ⇨ 215.
12. Check the tyre pressure of the installed tyre and the wheel nut torque as soon as possible.

Have the defective tyre renewed or repaired as soon as possible.

### Jacking position for lifting platform

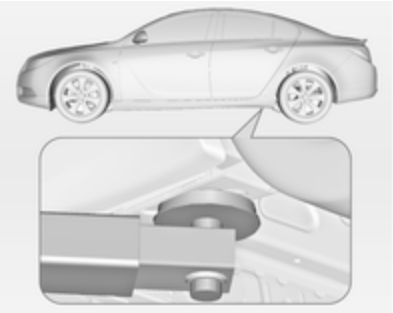

Rear arm position of the lifting platform at the underbody.

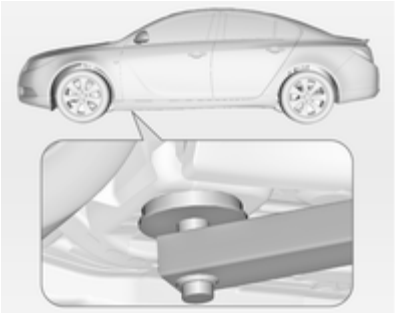

Front arm position of the lifting platform at the underbody.

## Spare wheel

Some vehicles are equipped with a tyre repair kit instead of a spare wheel.

The spare wheel can be classified as a temporary spare wheel depending on the size compared to the other mounted wheels and country regulations.

The spare wheel has a steel rim.

**Caution**

The use of a spare wheel that is smaller than the other wheels or in combination with winter tyres could affect driveability. Have the defective tyre replaced as soon as possible.

The spare wheel is located in the load compartment beneath the floor covering.

To remove:

1. Open the floor cover.

2. The spare wheel is secured with a wing nut. Turn wing nut anticlockwise and remove the spare wheel.

   Under the spare wheel there is the box with vehicle tools.
3. When, after a wheel change, no wheel is placed in the spare wheel well, secure the tool box by turning right back the wing nut and close the floor cover.

## Stowing the replaced full size wheel in the spare wheel well

The spare wheel well is not designed for all permitted tyre sizes. If a wheel wider than the spare must be stowed in the spare wheel well, the thread bolt for mounting the wheel must be replaced by an extension bolt, located in the tool box ⇨ 215. To replace the bolt:

- Remove tool box from the spare wheel well.

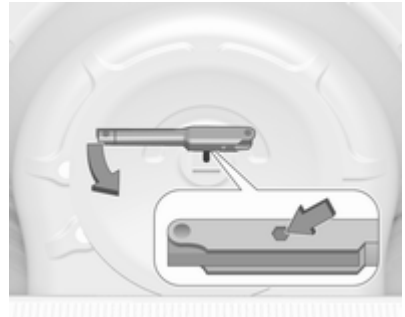

- Install the hexagon key of the wheel wrench ensuring that it locates securely on the bolt.
- Turn the wheel wrench anticlockwise to loosen the bolt. Remove the bolt.
- Take the extension bolt from the tool box ⇨ 215 and screw it in hand-tight using the hexagon key of the wheel wrench.

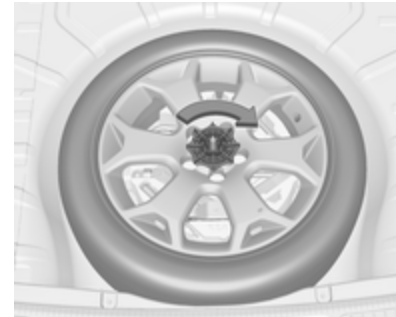

- Store the tool box and the damaged wheel outside up in the spare wheel well and secure it by turning the wing nut clockwise on the bolt.

The floor cover can be placed on the projecting wheel.

To fit the spare wheel in the well after renewing the defective wheel use the short thread bolt again. Exchange the bolt in the same way.

**⚠Warning**

Storing a jack, a wheel or other equipment in the load compartment could cause injury if they are not fixed properly. During a sudden stop or a collision, loose equipment could strike someone.

Store wheel, jack and tools always in the original storage location and secure them by fixing.

## Temporary spare wheel

**Caution**

The use of a spare wheel that is smaller than the other wheels or in combination with winter tyres could affect driveability. Have the defective tyre replaced as soon as possible.

Only mount one temporary spare wheel. Do not drive faster than 80 km/h. Take curves slowly. Do not use for a long period of time.

If your vehicle gets a flat tyre on the rear while towing another vehicle, mount the temporary spare wheel in the front and the full tyre in the rear.

Tyre chains ⇨ 220.

## Directional tyres

Fit directional tyres such that they roll in the direction of travel. The rolling direction is indicated by a symbol (e.g. an arrow) on the sidewall.

The following applies to tyres fitted opposing the rolling direction:

- Driveability may be affected. Have the defective tyre renewed or repaired as soon as possible.
- Drive particularly carefully on wet and snow-covered road surfaces.

# Jump starting

Do not start with quick charger.

A vehicle with a discharged battery can be started using jump leads and the battery of another vehicle.

**⚠Warning**

Be extremely careful when starting with jump leads. Any deviation from the following instructions can lead to injuries or damage caused by battery explosion or damage to the electrical systems of both vehicles.

**⚠Warning**

Avoid contact of the battery with eyes, skin, fabrics and painted surfaces. The fluid contains sulphuric acid which can cause injuries and damage in the event of direct contact.

- Never expose the battery to naked flames or sparks.

- A discharged battery can already freeze at a temperature of 0 °C. Defrost the frozen battery before connecting jump leads.
- Wear eye protection and protective clothing when handling a battery.
- Use a booster battery with the same voltage (12 Volts). Its capacity (Ah) must not be much less than that of the discharged battery.
- Use jump leads with insulated terminals and a cross section of at least 16 $mm^2$ (25 $mm^2$ for diesel engines).
- Do not disconnect the discharged battery from the vehicle.
- Switch off all unnecessary electrical consumers.
- Do not lean over the battery during jump starting.
- Do not allow the terminals of one lead to touch those of the other lead.
- The vehicles must not come into contact with each other during the jump starting process.
- Apply the parking brake, transmission in neutral, automatic transmission in **P**.

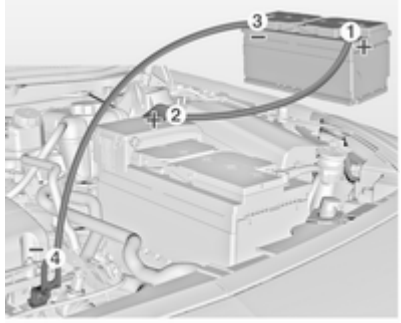


Lead connection order:

1. Connect the red lead to the positive terminal of the booster battery.
2. Connect the other end of the red lead to the positive terminal of the discharged battery.
3. Connect the black lead to the negative terminal of the booster battery.
4. Connect the other end of the black lead to a vehicle grounding point, such as the engine block or an engine mounting bolt. Connect as far away from the discharged battery as possible, however at least 60 cm.

Route the leads so that they cannot catch on rotating parts in the engine compartment.

To start the engine:

1. Start the engine of the vehicle providing the jump.
2. After 5 minutes, start the other engine. Start attempts should be made for no longer than 15 seconds at an interval of 1 minute.
3. Allow both engines to idle for approx. 3 minutes with the leads connected.

4. Switch on electrical consumers (e.g. headlights, heated rear window) of the vehicle receiving the jump start.
5. Reverse above sequence exactly when removing leads.

# Towing

## Towing the vehicle

Disengage cap at bottom and remove downwards.

**Insignia OPC:** Insert screwdriver in the slot at the upper bend of the cap. Release the cap by carefully moving the screwdriver downwards. To prevent damage it is recommended to place a cloth between the screwdriver and the frame.

The towing eye is stowed with the vehicle tools ⇨ 215.

Screw in the towing eye as far as it will go until it stops in a horizontal position.

Attach a tow rope – or better still a tow rod – to the towing eye.

The towing eye must only be used for towing and not for recovering the vehicle.

Switch on ignition to release steering wheel lock and to permit operation of brake lights, horn and windscreen wiper.

Transmission in neutral.

Switch on the hazard warning flashes on both vehicles.

**Caution**

Drive slowly. Do not drive jerkily. Excessive tractive force can damage the vehicle.

When the engine is not running, considerably more force is needed to brake and steer.

To prevent the entry of exhaust gases from the towing vehicle, switch on the air recirculation and close the windows.

Vehicles with manual transmission and All-wheel drive: If the vehicle is towed with all four wheels on the ground then there are no technical limitations for speed and distance. If only one axle has been raised, the maximum speed is 50 km/h. There is no distance limitation.

Vehicles with automatic transmission and Front-wheel drive: The vehicle must be towed facing forwards, not faster than 80 km/h nor further than 100 km. In all other cases and when the transmission is defective, the front axle must be raised off the ground.

Vehicles with automatic transmission and All-wheel drive: The vehicle must be towed facing forwards. If the vehicle is towed with all four wheels on the ground, the maximum speed is 50 km/h and for a maximum of 50 km. If the front axle has been raised, the maximum speed is 50 km/h. There is no distance limitation.

Seek the assistance of a workshop.

After towing, unscrew the towing eye.

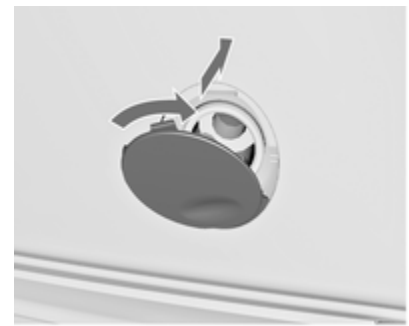

Insert cap at the bottom, turn slightly clockwise and close cap.

**Insignia OPC:** Insert cap with the lower flange into the recess. Press the cap into the bumper.

## Towing another vehicle

Disengage cap at bottom and remove downwards.

The towing eye is stowed with the vehicle tools ⇨ 215.

Screw in the towing eye as far as it will go until it stops in a horizontal position.

The lashing eye at the rear underneath the vehicle must never be used as a towing eye.

Attach a tow rope – or better still a tow rod – to the towing eye.

The towing eye must only be used for towing and not for recovering a vehicle.

| Caution |
| --- |
| Drive slowly. Do not drive jerkily. Excessive tractive force can damage the vehicle. |

After towing, unscrew the towing eye.

Insert cap at the bottom, turn slightly clockwise and engage cap.

# Appearance care

## Exterior care

### Locks

The locks are lubricated at the factory using a high quality lock cylinder grease. Use de-icing agent only when absolutely necessary, as this has a degreasing effect and impairs lock function. After using de-icing agent, have the locks regreased by a workshop.

### Washing

The paintwork of your vehicle is exposed to environmental influences. Wash and wax your vehicle regularly. When using automatic vehicle washes, select a programme that includes waxing.

Bird droppings, dead insects, resin, pollen and the like should be cleaned off immediately, as they contain aggressive constituents which can cause paint damage.

If using a vehicle wash, comply with the vehicle wash manufacturer's instructions. The windscreen wiper and rear window wiper must be switched off. Remove antenna and external accessories such as roof racks etc.

If you wash your vehicle by hand, make sure that the insides of the wheel housings are also thoroughly rinsed out.

Clean edges and folds on opened doors and the bonnet as well as the areas they cover.

| Caution |
| --- |
| Always use a cleaning agent with a pH value of 4 to 9.<br>Do not use cleaning agents on hot surfaces. |

Have the door hinges of all doors greased by a workshop.

Do not clean the engine compartment with a steam-jet or high-pressure jet cleaner.

Thoroughly rinse and leather-off the vehicle. Rinse leather frequently. Use separate leathers for painted and glass surfaces: remnants of wax on the windows will impair vision.

Do not use hard objects to remove spots of tar. Use tar removal spray on painted surfaces.

### Exterior lights

Headlight and other light covers are made of plastic. Do not use any abrasive or caustic agents, do not use an ice scraper, and do not clean them dry.

### Polishing and waxing

Wax the vehicle regularly (at the latest when water no longer beads). Otherwise, the paintwork will dry out.

Polishing is necessary only if the paint has become dull or if solid deposits have become attached to it.

Paintwork polish with silicone forms a protective film, making waxing unnecessary.

Plastic body parts must not be treated with wax or polishing agents.

### Windows and windscreen wiper blades

Use a soft lint-free cloth or chamois leather together with window cleaner and insect remover.

When cleaning the rear window, make sure the heating element inside is not damaged.

For mechanical removal of ice, use a sharp-edged ice scraper. Press the scraper firmly against the glass so that no dirt can get under it and scratch the glass.

Clean smearing wiper blades with a soft cloth and window cleaner.

### Sunroof

Never clean with solvents or abrasive agents, fuels, aggressive media (e.g. paint cleaner, acetone-containing solutions etc.), acidic or highly alkaline media or abrasive pads. Do not apply wax or polishing agents to the sunroof.

### Wheels and tyres

Do not use high-pressure jet cleaners.

Clean rims with a pH-neutral wheel cleaner.

Rims are painted and can be treated with the same agents as the body.

### Paintwork damage

Rectify minor paintwork damage with a touch-up pen before rust forms. Have more extensive damage or rust areas repaired by a workshop.

### Underbody

Some areas of the vehicle underbody have a PVC undercoating while other critical areas have a durable protective wax coating.

After the underbody is washed, check the underbody and have it waxed if necessary.

Bitumen/rubber materials could damage the PVC coating. Have underbody work carried out by a workshop.

Before and after winter, wash the underbody and have the protective wax coating checked.

### Liquid gas system

**⚠ Danger**

Liquid gas is heavier than air and can collect in sink points.

Take care when performing work at the underbody in a pit.

For painting work and when using a drying booth at a temperature above 60 °C, the liquid gas tank must be removed.

Do not make any modifications to the liquid gas system.

### Towing equipment

Do not clean the coupling ball bar with a steam-jet or high-pressure jet cleaner.

## Interior care

### Interior and upholstery

Only clean the vehicle interior, including the instrument panel fascia and panelling, with a dry cloth or interior cleaner.

Clean the leather upholstery with clear water and a soft cloth. In case of heavy soiling, use leather care.

The instrument panel should only be cleaned using a soft damp cloth.

Clean fabric upholstery with a vacuum cleaner and brush. Remove stains with an upholstery cleaner.

Clothing fabrics may not be colourfast. This could cause visible discolourations, especially on light-coloured upholstery. Removable stains and discolourations should be cleaned as soon as possible.

Clean seat belts with lukewarm water or interior cleaner.

| Caution |
| --- |
| Close Velcro fasteners as open Velcro fasteners on clothing could damage seat upholstery.<br>The same applies to clothing with sharp-edged objects, like zips or belts or studded jeans. |

## Plastic and rubber parts

Plastic and rubber parts can be cleaned with the same cleaner as used to clean the body. Use interior cleaner if necessary. Do not use any other agent. Avoid solvents and petrol in particular. Do not use high-pressure jet cleaners.

# Service and maintenance

General information ..... 236
Recommended fluids, lubricants and parts ..... 237

# General information

## Service information

In order to ensure economical and safe vehicle operation and to maintain the value of your vehicle, it is of vital importance that all maintenance work is carried out at the proper intervals as specified.

The detailed, up-to-date service schedule for your vehicle is available at the workshop.

Service display ⇨ 89.

### European service intervals

Maintenance of your vehicle is required every 30,000 km or after 1 year, whichever occurs first, unless otherwise indicated in the service display.

The european service intervals are valid for the following countries:

Andorra, Austria, Belgium, Bosnia-Herzegovina, Bulgaria, Croatia, Cyprus, Czech Republic, Denmark, Estonia, Finland, France, Germany, Greece, Greenland, Hungary, Iceland, Ireland, Italy, Latvia, Lithuania, Luxembourg, Macedonia, Malta, Montenegro, Netherlands, Norway, Poland, Portugal, Romania, Slovakia, Slovenia, Spain, Sweden, Switzerland, United Kingdom.

Service display ⇨ 89.

### International service intervals

Maintenance of your vehicle is required every 15000 km or after 1 year, whichever occurs first, unless otherwise indicated in the service display.

The international service intervals are valid for the countries which are not listed at the european service intervals.

Service display ⇨ 89.

### Confirmations

Confirmation of service is recorded in the Service and Warranty Booklet. The date and mileage is completed with the stamp and signature of the servicing workshop.

Make sure that the Service and Warranty Booklet is completed correctly as continuous proof of service is essential if any warranty or goodwill claims are to be met, and is also a benefit when selling the vehicle.

### Service interval with remaining engine oil life duration

The service interval is based on several parameters depending on usage.

The service display lets you know when to change the engine oil.

Service display ⇨ 89.

# Recommended fluids, lubricants and parts

## Recommended fluids and lubricants

Only use products that meet the recommended specifications. Damage resulting from the use of products not in line with these specifications will not be covered by the warranty.

**⚠ Warning**

Operating materials are hazardous and could be poisonous. Handle with care. Pay attention to information given on the containers.

### Engine oil

Engine oil is identified by its quality and its viscosity. Quality is more important than viscosity when selecting which engine oil to use. The oil quality ensures e.g. engine cleanliness, wear protection and oil aging control, whereas viscosity grade gives information on the oil's thickness over a temperature range.

Dexos is the newest engine oil quality that provides optimum protection for gasoline and diesel engines. If it is unavailable, engine oils of other listed qualities have to be used. Recommendations for gasoline engines are also valid for Compressed Natural Gas (CNG), Liquified Petroleum Gas (LPG) and Ethanol (E85) fuelled engines.

Select the appropriate engine oil based on its quality and on the minimum ambient temperature ⇨ 241.

#### Topping up engine oil

Engine oils of different manufacturers and brands can be mixed as long as they comply with the required engine oil quality and viscosity.

Use of engine oil with only ACEA A1/B1 or only A5/B5 quality is prohibited, since it can cause long-term engine damage under certain operating conditions.

Select the appropriate engine oil based on its quality and on the minimum ambient temperature ⇨ 241.

### Additional engine oil additives

The use of additional engine oil additives could cause damage and invalidate the warranty.

### Engine oil viscosity grades

The SAE viscosity grade gives information of the thickness of the oil.

Multigrade oil is indicated by two figures, e.g. SAE 5W-30. The first figure, followed by a W, indicates the low temperature viscosity and the second figure the high temperature viscosity.

Select the appropriate viscosity grade depending on the minimum ambient temperature ⇨ 241.

All of the recommended viscosity grades are suitable for high ambient temperatures.

## Coolant and antifreeze

Use only silicate-free long life coolant (LLC) antifreeze.

The system is factory filled with coolant designed for excellent corrosion protection and frost protection down to approx. -28 °C. This concentration should be maintained all year round. The use of additional coolant additives that intend to give additional corrosion protection or seal against minor leaks can cause function problems. Liability for consequences resulting from the use of additional coolant additives will be rejected.

## Brake and clutch fluid

Only use high-performance brake fluid approved for the vehicle, consult a workshop.

Over time, brake fluid absorbs moisture which will reduce braking effectiveness. The brake fluid should therefore be replaced at the specified interval.

Brake fluid should be stored in a sealed container to avoid water absorption.

Ensure brake fluid does not become contaminated.

# Technical data

Vehicle identification ..... 239
Vehicle data ..... 241

# Vehicle identification

## Vehicle Identification Number

The Vehicle Identification Number is visible through the windscreen.

## Identification plate

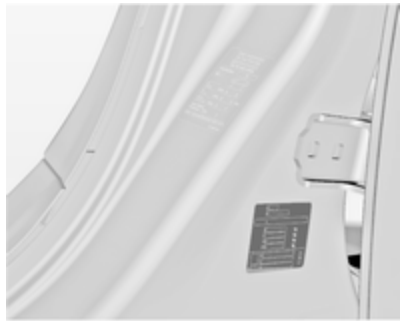

The identification label is located on the front left door frame.

Information on identification plate:

1 = Manufacturer
2 = Type approval number
3 = Vehicle Identification Number
4 = Permissible gross vehicle weight rating in kg
5 = Permissible gross train weight in kg
6 = Maximum permissible front axle load in kg
7 = Maximum permissible rear axle load in kg
8 = Vehicle-specific or country-specific data, e.g. MY = Model year

The combined total of front and rear axle loads must not exceed the permissible gross vehicle weight. For example, if the front axle is bearing its maximum permissible load, the rear axle can only bear a load that is equal to the gross vehicle weight minus the front axle load.

The technical data is determined in accordance with European Community standards. We reserve the right to make modifications.

Specifications in the vehicle documents always have priority over those given in this manual.

# Vehicle data
## Recommended fluids and lubricants

### European service schedule

**Required engine oil quality**

| | All European countries (except Belarus, Moldova, Russia, Serbia, Turkey) | | Only Israel | |
|---|---|---|---|---|
| Engine oil quality | Petrol engines (including CNG, LPG, E85) | Diesel engines | Petrol engines (including CNG, LPG, E85) | Diesel engines |
| **dexos 1** | – | – | ✓ | – |
| **dexos 2** | ✓ | ✓ | – | ✓ |

In case dexos quality is unavailable you may use max. 1 litre engine oil quality ACEA C3 once between each oil change.

**Engine oil viscosity grades**

| | All European countries and Israel (except Belarus, Moldova, Russia, Serbia, Turkey) |
|---|---|
| Ambient temperature | Petrol and diesel engines |
| down to -25 °C | SAE 5W-30 or SAE 5W-40 |
| below -25 °C | SAE 0W-30 or SAE 0W-40 |

## International service schedule

### Required engine oil quality

| | All countries outside Europe except Israel | | Only Belarus, Moldova, Russia, Serbia, Turkey | |
|---|---|---|---|---|
| Engine oil quality | Petrol engines (including CNG, LPG, E85) | Diesel engines | Petrol engines (including CNG, LPG, E85) | Diesel engines |
| **dexos 1** | ✓ | – | – | – |
| **dexos 2** | – | ✓ | ✓ | ✓ |

In case dexos quality is unavailable you may use the oil qualities listed below:

| | All countries outside Europe except Israel | | Only Belarus, Moldova, Russia, Serbia, Turkey | |
|---|---|---|---|---|
| Engine oil quality | Petrol engines (including CNG, LPG, E85) | Diesel engines | Petrol engines (including CNG, LPG, E85) | Diesel engines |
| GM-LL-A-025 | ✓ | – | ✓ | – |
| GM-LL-B-025 | – | ✓ | – | ✓ |

| | All countries outside Europe except Israel | | Only Belarus, Moldova, Russia, Serbia, Turkey | |
|---|---|---|---|---|
| Engine oil quality | Petrol engines (including CNG, LPG, E85) | Diesel engines | Petrol engines (including CNG, LPG, E85) | Diesel engines |
| ACEA A3/B3 | ✓ | – | ✓ | – |
| ACEA A3/B4 | ✓ | ✓ | ✓ | ✓ |
| ACEA C3 | ✓ | ✓ | ✓ | ✓ |
| API SM | ✓ | – | ✓ | – |
| API SN resource conserving | ✓ | – | ✓ | – |

**Engine oil viscosity grades**

| | All countries outside Europe (except Israel), including Belarus, Moldova, Russia, Serbia, Turkey |
|---|---|
| Ambient temperature | Petrol and diesel engines |
| down to -25 °C | SAE 5W-30 or SAE 5W-40 |
| below -25 °C | SAE 0W-30 or SAE 0W-40 |
| down to -20 °C | SAE 10W-30[1)] or SAE 10W-40[1)] |

[1)] Permitted, but usage of SAE 5W-30 or SAE 5W-40 with dexos quality is recommended.

## Engine data

| Sales designation | 1.4 | 1.4 LPG | 1.6 | 1.6 Turbo | 1.8 | 2.0 Turbo | 2.0 Turbo |
|---|---|---|---|---|---|---|---|
| Engine identifier code | A14NET | A14NET | A16XER | A16LET | A18XER | A20NFT FWD | A20NFT AWD |
| Piston displacement [$cm^3$] | 1364 | 1364 | 1598 | 1598 | 1796 | 1998 | 1998 |
| Engine power [kW] | 103 | 103 | 85 | 132 | 103 | 162 | 185 |
| at rpm | 4900-6000 | 4900-6000 | 6000 | 5500 | 6300 | 5300 | 5300 |
| Torque [Nm] | 200 | 200 | 155 | 230 | 175 | 350 | 400 |
| at rpm | 1850-4900 | 1850-4900 | 4000 | 2050 | 3800 | 2000-4000 | 2400-3600 |
| Fuel type | Petrol | Petrol/Liquid gas | Petrol | Petrol | Petrol | Petrol | Petrol |
| Octane rating RON | | | | | | | |
| recommended | 95 | 95 | 95 | 95 | 95 | 95 | 95 |
| possible | 98 | 98 | 98 | 98 | 98 | 98 | 98 |
| possible | 91 | 91 | 91 | 91[2)] | 91 | 91 | 91 |
| Additional fuel type | – | LPG | – | – | – | E85 | – |
| Oil consumption [l/1000 km] | 0.6 | 0.6 | 0.6 | 0.6 | 0.6 | 0.6 | 0.6 |

[2)] Possible only if high engine load, full load or driving in mountainous terrain with a caravan/trailer or high payload is avoided.

| Sales designation | 2.8 V6 Turbo | OPC |
|---|---|---|
| Engine identifier code | A28NET | A28NER |
| Piston displacement [$cm^3$] | 2792 | 2792 |
| Engine power [kW] | 191 | 239 |
| at rpm | 5500 | 5250 |
| Torque [Nm] | 350 | 435 |
| at rpm | 1900-4500 | 5250 |
| Fuel type | Petrol | Petrol |
| Octane rating RON | | |
| recommended | 98 | 98 |
| possible | 95 | 95 |
| possible | 91[2)] | 91[2)] |
| Oil consumption [l/1000 km] | 0.6 | 0.6 |

[2)] Possible only if high engine load, full load or driving in mountainous terrain with a caravan/trailer or high payload is avoided.

| Sales designation | 2.0 CDTI | 2.0 CDTI | ecoFlex | 2.0 CDTI | 2.0 CDTI |
|---|---|---|---|---|---|
| Engine identifier code | A20DTL | A20DT | A20DTH | A20DTH | A20DTR |
| Piston displacement [$cm^3$] | 1956 | 1956 | 1956 | 1956 | 1956 |
| Engine power [kW] | 81 | 96 | 118 | 118 | 143 |
| at rpm | 4000 | 4000 | 4000 | 4000 | 4000 |
| Torque [Nm] | 260 | 300 | 350 | 350 | 400 |
| at rpm | 1750-2500 | 1750-2500 | 1750-2500 | 1750-2500 | 1750-2500 |
| Fuel type | Diesel | Diesel | Diesel | Diesel | Diesel |
| Oil consumption [l/1000 km] | 0.6 | 0.6 | 0.6 | 0.6 | 0.6 |

# Performance

## 5-door Hatchback/4-door Saloon

| Engine | A14NET | A14NET LPG | A16XER | A16LET | A18XER | A20NFT | A20NFT AWD[3] |
|---|---|---|---|---|---|---|---|
| Maximum speed[4] [km/h] | | | | | | | |
| Manual transmission | 205 | [5] | 192 | 225 | 207 | 242 | 250 |
| Automatic transmission | – | – | – | – | – | 240 | 243 |

| Engine | A28NET AWD[3] | A28NER AWD[3] |
|---|---|---|
| Maximum speed[6] [km/h] | | |
| Manual transmission | – | 250[7]/270 |
| Automatic transmission | 250[7] | 250[7]/265 |

[3] All-wheel drive.
[4] The maximum speed indicated is achievable at kerb weight (without driver) plus 200 kg payload. Optional equipment could reduce the specified maximum speed of the vehicle.
[5] Value was not available at time of printing.
[6] The maximum speed indicated is achievable at kerb weight (without driver) plus 200 kg payload. Optional equipment could reduce the specified maximum speed of the vehicle.
[7] Limited speed.

| Engine | A20DTL | A20DT | A20DTH AWD[3] | A20DTH | A20DTH ecoFlex 118kW | A20DTR | A20DTR AWD[3] |
|---|---|---|---|---|---|---|---|
| Maximum speed [km/h] | | | | | | | |
| Manual transmission | 190 | 205 | 215 | 218 | 221 | 230 | 228 |
| Automatic transmission | – | 204 | 213 | 215 | – | 229 | 225 |

## Sports Tourer

| Engine | A14NET | A16XER | A16LET | A18XER | A20NFT | A20NFT AWD[3] |
|---|---|---|---|---|---|---|
| Maximum speed [km/h] | | | | | | |
| Manual transmission | 200 | 187 | 220 | 202 | 236 | 242 |
| Automatic transmission | – | – | – | – | 234 | 233 |

[3] All-wheel drive.

| Engine | A28NET AWD[3] | A28NER AWD[3] |
|---|---|---|
| Maximum speed [km/h] | | |
| Manual transmission | 250[7] | 250[7]/265 |
| Automatic transmission | 248[7] | 250[7]/260 |

| Engine | A20DTL | A20DT | A20DTH AWD[3] | A20DTH | A20DTH ecoFlex 118kW | A20DTR | A20DTR AWD[3] |
|---|---|---|---|---|---|---|---|
| Maximum speed [km/h] | | | | | | | |
| Manual transmission | 185 | 200 | 210 | 212 | 215 | 225 | 223 |
| Automatic transmission | – | 198 | 208 | 210 | – | 224 | 220 |

[3] All-wheel drive.
[7] Limited speed.

# Vehicle weight

## Kerb weight, basic model without any optional equipment

| 4-door Saloon | Engine | Manual transmission | Automatic transmission |
|---|---|---|---|
| without/with air conditioning [kg] | A14NET[8)] | 1503/1513 | – |
| | A14NET LPG | –[9)] | – |
| | A16XER | 1503/1513 | – |
| | A16LET | –/1550 | – |
| | A18XER | –/1503 | – |
| | A20DTC, A20DTL | –/1613 | – |
| | A20DTL[8)] | –/1613 | – |
| | A20DTH ecoFlex | 1613/1623 | – |
| | A20DTH - All-wheel drive | –/1733 | –/1788 |
| | A20DTH[8)] - All wheel drive | –/1733 | – |

8) With stop-start function.
9) Value was not available at time of printing.

| 4-door Saloon | Engine | Manual transmission | Automatic transmission |
|---|---|---|---|
| **without/with air conditioning** [kg] | A20DTH | 1613/1623 | 1613/1623 |
| | A20DTH ecoFlex 118kW | 1613/1623 | – |
| | A20DT, A20DTJ | –/1613 | 1613/1623 |
| | A20DT[8)] | –/1613 | – |
| | A20DTR | –/1664 | –/1664 |
| | A20DTR[8)] | –/1664 | – |
| | A20DTR - All-wheel drive | –/1733 | –/1788 |
| | A20DTR - All-wheel drive[8)] | –/1733 | – |

8) With stop-start function.

| 4-door Saloon | Engine | Manual transmission | Automatic transmission |
|---|---|---|---|
| without/with air conditioning [kg] | A20NHT | –/1613 | –/1655 |
| | A20NHT - All-wheel drive | –/1733 | –/1770 |
| | A20NFT | –/1613 | –/1613 |
| | A20NFT[8)] | –/1613 | – |
| | A20NFT - All-wheel drive | –/1733 | –/1733 |
| | A20NFT - All wheel drive[8)] | –/1733 | – |
| | A28NET - All-wheel drive | –/1810 | –/1835 |
| | A28NER - All-wheel drive | –/1810 | –/1835 |

8) With stop-start function.

## Kerb weight, basic model without any optional equipment

| 5-door Hatchback | Engine | Manual transmission | Automatic transmission |
|---|---|---|---|
| **without/with air conditioning** [kg] | A14NET[8)] | 1503/1513 | – |
| | A14NET LPG | –[9)] | – |
| | A16XER | 1503/1513 | – |
| | A16LET | –/1571 | – |
| | A18XER | –/1503 | – |
| | A20DTL, A20DTC | –/1613 | – |
| | A20DTL[8)] | –/1613 | – |
| | A20DTH ecoFlex 96kW | 1613/1623 | – |
| | A20DTH - All-wheel drive | –/1788 | –/1788 |
| | A20DTH - All-wheel drive[8)] | –/1788 | – |

8) With stop-start function.
9) Value was not available at time of printing.

| 5-door Hatchback | Engine | Manual transmission | Automatic transmission |
|---|---|---|---|
| without/with air conditioning [kg] | A20DTH | 1613/1623 | 1613/1623 |
| | A20DTH ecoFlex 118kW | 1613/1623 | – |
| | A20DT | –/1613 | 1613/1623 |
| | A20DT[8)] | –/1613 | – |
| | A20DTJ | –/1613 | 1655/– |
| | A20DTR | –/1664 | –/1701 |
| | A20DTR[8)] | –/1664 | – |
| | A20DTR - All-wheel drive | –/1788 | –/1816 |
| | A20DTR - All-wheel drive[8)] | –/1816 | – |

[8)] With stop-start function.

| 5-door Hatchback | Engine | Manual transmission | Automatic transmission |
|---|---|---|---|
| **without/with air conditioning** [kg] | A20NHT | –/1645 | –/1670 |
| | A20NFT | –/1613 | –/1664 |
| | A20NFT[8)] | –/1613 | – |
| | A20NFT - All wheel drive | –/1733 | –/1733 |
| | A20NFT[8)] - All wheel drive | –/1733 | – |
| | A20NHT - All-wheel drive | –/1733 | –/1785 |
| | A28NET - All-wheel drive | –/1825 | –/1843 |
| | A28NER - All-wheel drive | –/1825 | –/1843 |

8) With stop-start function.

## Kerb weight, basic model without any optional equipment

| Sports Tourer | Engine | Manual transmission | Automatic transmission |
|---|---|---|---|
| without/with air conditioning [kg] | A14NET[8)] | 1613/1623 | – |
| | A14 NET LPG | –[9)] | – |
| | A16XER | –/1610 | – |
| | A16LET | –/1613 | – |
| | A18XER | –/1613 | – |
| | A20DTL, A20DTC | –/1701 | – |
| | A20DTL[8)] | –/1701 | – |
| | A20DTH ecoFlex 96kW | 1733/1743 | – |
| | A20DTH | 1733/1743 | –/1733 |

8) With stop-start function.
9) Value was not available at time of printing.

| Sports Tourer | Engine | Manual transmission | Automatic transmission |
|---|---|---|---|
| **without/with air conditioning** [kg] | A20DTH - All-wheel drive | –/1843 | –/1843 |
| | A20DTH - All-wheel drive[8)] | –/1843 | – |
| | A20DTH ecoFlex 118kW | 1733/1743 | – |
| | A20DT, A20DTJ | –/1701 | –/1733 |
| | A20DT[8)] | –/1733 | – |
| | A20DTR | –/1733 | –/1733 |
| | A20DTR[8)] | –/1733 | –/1733 |
| | A20DTR - All-wheel drive | –/1843 | –/1843 |
| **without/with air conditioning** [kg] | A20DTR - All-wheel drive[8)] | –/1843 | – |
| | A20NFT | –/1701 | –/1733 |
| | A20NFT[8)] | –/1701 | – |
| | A20NFT - All wheel drive | –/1843 | –/1843 |

8) With stop-start function.

| Sports Tourer | Engine | Manual transmission | Automatic transmission |
|---|---|---|---|
| without/with air conditioning [kg] | A20NFT - All wheel drive[8)] | –/1843 | – |
| | A20NHT | –/1725 | –/1733 |
| | A20NHT - All-wheel drive | –/1843 | –/1843 |
| | A28NET - All-wheel drive | –/1940 | –/1953 |
| | A28NER - All-wheel drive | –/1940 | –/1953 |

## Kerb weight, basic model with all optional equipment

| 4-door Saloon | Engine | Manual transmission | Automatic transmission |
|---|---|---|---|
| without/with air conditioning [kg] | A14NET[8)] | –/1701 | – |
| | A16XER | –/1672 | – |
| | A16LET | –/1701 | – |
| | A18XER | –/1692 | – |
| | A20DTL, A20DTC | –/1778 | – |
| | A20DTL[8)] | –/1788 | – |
| | A20DT | –/1793 | –/1819 |
| | A20DT[8)] | –/1788 | – |

8) With stop-start function.

| 4-door Saloon | Engine | Manual transmission | Automatic transmission |
|---|---|---|---|
| **without/with air conditioning** [kg] | A20DTH ecoFlex 96kW | –/1799 | – |
| | A20DTH - All-wheel drive | –/1901 | –/1931 |
| | A20DTH - All-wheel drive[8)] | –/1901 | – |
| | A20DTH | –/1806 | –/1829 |
| | A20DTH[8)] | –/1901 | – |
| | A20DTH ecoFlex 118kW | –/1799 | – |
| | A20DTJ | –/1793 | –/1819 |
| | A20DTR | –/1816 | –/1816 |
| | A20DTR[8)] | –/1816 | – |
| | A20DTR - All-wheel drive | –/1931 | –/1953 |
| **without/with air conditioning** [kg] | A20DTR[8)] - All-wheel drive | –/1953 | – |
| | A20NFT | –/1789 | –/1788 |
| | A20NFT[8)] | –/1788 | – |
| | A20NFT - All-wheel drive | –/1905 | –/1901 |
| | A20NFT[8)] - All-wheel drive | –/1901 | – |

8) With stop-start function.

| 4-door Saloon | Engine | Manual transmission | Automatic transmission |
|---|---|---|---|
| without/with air conditioning [kg] | A20NHT | –/1789 | –/1813 |
| | A20NHT - All-wheel drive | –/1905 | –/1929 |
| | A28NET - All-wheel drive | –/1968 | –/1992 |
| | A28NER - All-wheel drive | –/1968 | –/1992 |

## Kerb weight, basic model with all optional equipment

| 5-door Hatchback | Engine | Manual transmission | Automatic transmission |
|---|---|---|---|
| without/with air conditioning [kg] | A14NET[8)] | –/1733 | – |
| | A16XER | –/1687 | – |
| | A16LET | –/1733 | – |
| | A18XER | –/1707 | – |
| | A20DTC, A20DTL | –/1793 | – |
| | A20DTL[8)] | –/1788 | – |
| | A20DTH ecoFlex 96kW | –/1815 | – |
| | A20DTH | –/1821 | –/1844 |

8) With stop-start function.

| 5-door Hatchback | Engine | Manual transmission | Automatic transmission |
|---|---|---|---|
| **without/with air conditioning** [kg] | A20DTH ecoFlex 118kW | –/1815 | – |
| | A20DTH - All-wheel drive | –/1901 | –/1931 |
| | A20DTH[8] - All-wheel drive | –/1953 | – |
| | A20DT, A20DTJ | –/1808 | –/1834 |
| | A20DT[8] | –/1843 | – |
| | A20DTR | –/1816 | –/1843 |
| | A20DTR[8] | –/1843 | – |
| | A20DTR - All-wheel drive | –/1953 | –/1953 |
| **without/with air conditioning** [kg] | A20DTR[8] - All-wheel drive | –/1953 | – |
| | A20NHT | –/1804 | –/1828 |
| | A20NHT - All-wheel drive | –/1920 | –/1944 |
| | A20NFT | –/1788 | –/1788 |
| | A20NFT[8] | –/1788 | – |

[8] With stop-start function.

| 5-door Hatchback | Engine | Manual transmission | Automatic transmission |
|---|---|---|---|
| without/with air conditioning [kg] | A20NFT - All-wheel drive | –/1920 | –/1931 |
| | A20NFT[8] - All-wheel drive | –/1901 | – |
| | A28NET - All-wheel drive | –/1983 | –/2007 |
| | A28NER - All-wheel drive | –/1983 | –/2007 |

## Kerb weight, basic model with all optional equipment

| Sports Tourer | Engine | Manual transmission | Automatic transmission |
|---|---|---|---|
| without/with air conditioning [kg] | A14NET[8] | –/1815 | – |
| | A16XER | –/1784 | – |
| | A16LET | –/1816 | – |
| | A18XER | –/1799 | – |
| | A20DTL, A20DTC | –/1901 | – |
| | A20DTL[8] | –/1901 | – |
| | A20DTH ecoFlex 96kW | –/1918 | – |
| | A20DTH | –/1918 | –/1931 |

[8] With stop-start function.

| Sports Tourer | Engine | Manual transmission | Automatic transmission |
|---|---|---|---|
| **without/with air conditioning** [kg] | A20DTH ecoFlex 118kW | –/1918 | – |
| | A20DTH - All-wheel drive | –/2015 | –/2045 |
| | A20DTH[8] - All-wheel drive | –/2045 | – |
| | A20DT, A20DTJ | –/1901 | –/1941 |
| | A20DT[8] | –/1931 | – |
| | A20DTR | –/1931 | –/1953 |
| | A20DTR[8] | –/1931 | – |
| | A20DTR - All-wheel drive | –/2045 | –/2073 |
| **without/with air conditioning** [kg] | A20DTR[8] - All-wheel drive | –/2045 | – |
| | A20NHT | –/1899 | –/1923 |
| | A20NHT - All-wheel drive | –/2021 | –/2045 |
| | A20NFT | –/1843 | –/1901 |
| | A20NFT[8] | –/1901 | – |

[8] With stop-start function.

| Sports Tourer | Engine | Manual transmission | Automatic transmission |
|---|---|---|---|
| **without/with air conditioning** [kg] | A20NFT - All-wheel drive | –/2021 | –/2045 |
| | A20NFT[8] - All-wheel drive | –/2015 | – |
| | A28NET - All-wheel drive | –/2074 | –/2098 |
| | A28NER - All-wheel drive | –/2074 | –/2098 |

## Vehicle dimensions

| | 4-door Saloon | 5-door Hatchback | Sports Tourer |
|---|---|---|---|
| Length [mm] | 4830 | 4830 | 4908 |
| Width without exterior mirrors [mm] | 1856 | 1856 | 1856 |
| Width with two exterior mirrors [mm] | 2084 | 2084 | 2084 |
| Height (without antenna) [mm] | 1498 | 1498 | 1520 |
| Length of load compartment floor [mm] | 1003 | 1003 | 1086 |
| Length of load compartment with folded rear seats [mm] | 1895 | 1895 | 1908 |
| Load compartment width [mm] | 1027 | 1027 | 1030 |
| Load compartment height [mm] | 356 | 436 | 677 |

[8] With stop-start function.

| | 4-door Saloon | 5-door Hatchback | Sports Tourer |
|---|---|---|---|
| Wheelbase [mm] | 2737 | 2737 | 2737 |
| Turning circle diameter [m] | 11.4 | 11.4 | 11.4 |

# Capacities

## Engine oil

| Engine | A14NET, A14NET LPG | A16XER | A16LET | A18XER | A20NHT, A20NFT | A28NET | A28NER |
|---|---|---|---|---|---|---|---|
| including Filter [l] | 4.0 | 4.5 | 4.5 | 4.5 | 6.0 | 6.3 | 6.3 |
| between MIN and MAX [l] | 1.0 | 1.0 | 1.0 | 1.0 | 1.0 | 1.0 | 1.0 |

| Engine | A20DTC, A20DTL | A20DTJ, A20DT | A20DTH | A20DTH ecoFlex 118kW | A20DTR |
|---|---|---|---|---|---|
| including Filter [l] | 4.5 | 4.5 | 4.5 | 4.5 | 4.5 |
| between MIN and MAX [l] | 1.0 | 1.0 | 1.0 | 1.0 | 1.0 |

## Fuel tank

| | |
|---|---|
| Petrol/diesel, E85, nominal capacity [l] | 70 |
| LPG, nominal capacity [l] | –[10] |

[10] Value was not available at time of printing.

# Tyre pressures

## Tyre pressures for vehicles with front-wheel drive

### 5-door Hatchback/4-door Saloon

| Engine | Tyres | Comfort with up to 3 people | | ECO with up to 3 people | | With full load | |
|---|---|---|---|---|---|---|---|
| | | front | rear | front | rear | front | rear |
| | | [kPa/bar] ([psi]) | [kPa/bar] ([psi]) | [kPa/bar] ([psi]) | [kPa/bar] ([psi]) | [kPa/bar] ([psi]) | [kPa/bar] ([psi]) |
| A16XER | 205/60 R16, 215/60 R16, 215/55 R17, 225/45 R18, 225/50 R17, 245/45 R18, 235/45 R18, | 220/2.2 (32) | 200/2.0 (29) | 270/2.7 (39) | 260/2.6 (38) | 220/2.2 (32) | 270/2.7 (39) |
| | 225/55 R17 | 220/2.2 (32) | 200/2.0 (29) | 300/3.0 (43) | 300/3.0 (43) | 220/2.2 (32) | 270/2.7 (39) |

| Engine | Tyres | Comfort with up to 3 people | | ECO with up to 3 people | | With full load | |
|---|---|---|---|---|---|---|---|
| | | front | rear | front | rear | front | rear |
| | | [kPa/bar] ([psi]) | [kPa/bar] ([psi]) | [kPa/bar] ([psi]) | [kPa/bar] ([psi]) | [kPa/bar] ([psi]) | [kPa/bar] ([psi]) |
| A14NET<br>A 14NET LPG | 205/60 R16,<br>215/60 R16,<br>215/55 R17,<br>225/50 R17,<br>225/45 R18,<br>235/45 R18,<br>245/45 R18,<br>245/40 R19,<br>245/35 R20 | 220/2.2 (32) | 200/2.0 (29) | 270/2.7 (39) | 260/2.6 (38) | 220/2.2 (32) | 270/2.7 (39) |
| | 225/55 R17 | 220/2.2 (32) | 200/2.0 (29) | 300/3.0 (43) | 300/3.0 (43) | 220/2.2 (32) | 270/2.7 (39) |

| Engine | Tyres | Comfort with up to 3 people | | ECO with up to 3 people | | With full load | |
|---|---|---|---|---|---|---|---|
| | | front | rear | front | rear | front | rear |
| | | [kPa/bar] ([psi]) | [kPa/bar] ([psi]) | [kPa/bar] ([psi]) | [kPa/bar] ([psi]) | [kPa/bar] ([psi]) | [kPa/bar] ([psi]) |
| A16 LET | 225/50 R17, 225/45 R18 | 220/2.2 (32) | 200/2.0 (29) | – | – | 220/2.2 (32) | 270/2.7 (39) |
| | 215/55 R17, 235/45 R18, 245/45 R18, 245/40 R19, 245/35 R20 | 220/2.2 (32) | 200/2.0 (29) | 270/2.7 (39) | 260/2.6 (38) | 220/2.2 (32) | 270/2.7 (39) |
| | 225/55 R17, 225/50 R17 | 220/2.2 (32) | 200/2.0 (29) | 300/3.0 (43) | 300/3.0 (43) | 220/2.2 (32) | 270/2.7 (39) |

| Engine | Tyres | Comfort with up to 3 people | | ECO with up to 3 people | | With full load | |
|---|---|---|---|---|---|---|---|
| | | front | rear | front | rear | front | rear |
| | | [kPa/bar] ([psi]) | [kPa/bar] ([psi]) | [kPa/bar] ([psi]) | [kPa/bar] ([psi]) | [kPa/bar] ([psi]) | [kPa/bar] ([psi]) |
| A18XER | 205/60 R16, 215/60 R16, 215/55 R17, 245/35 R20 225/50 R17, 225/45 R18, 235/45 R18, 245/45 R18, 245/40 R19 | 220/2.2 (32) | 200/2.0 (29) | 270/2.7 (39) | 260/2.6 (38) | 220/2.2 (32) | 270/2.7 (39) |
| | 225/55 R17 | 220/2.2 (32) | 200/2.0 (29) | 300/3.0 (43) | 300/3.0 (43) | 220/2.2 (32) | 270/2.7 (39) |

| Engine | Tyres | Comfort with up to 3 people | | ECO with up to 3 people | | With full load | |
|---|---|---|---|---|---|---|---|
| | | front | rear | front | rear | front | rear |
| | | [kPa/bar] ([psi]) | [kPa/bar] ([psi]) | [kPa/bar] ([psi]) | [kPa/bar] ([psi]) | [kPa/bar] ([psi]) | [kPa/bar] ([psi]) |
| A20NFT with manual transmission | 225/50 R17, 225/45 R18 | 240/2.4 (35) | 220/2.2 (32) | – | – | 250/2.5 (36) | 300/3.0 (43) |
| | 215/55 R17, 235/45 R18, 245/45 R18, 245/40 R19 | 220/2.2 (32) | 200/2.0 (29) | 270/2.7 (39) | 260/2.6 (38) | 220/2.2 (32) | 270/2.7 (39) |
| | 225/55 R17 | 220/2.2 (32) | 200/2.0 (29) | 300/3.0 (43) | 300/3.0 (43) | 220/2.2 (32) | 270/2.7 (39) |
| | 245/35 R20 | 230/2.3 (33) | 210/2.1 (30) | 270/2.7 (39) | 260/2.6 (38) | 250/2.5 (36) | 300/3.0 (43) |

| Engine | Tyres | Comfort with up to 3 people | | ECO with up to 3 people | | With full load | |
|---|---|---|---|---|---|---|---|
| | | front | rear | front | rear | front | rear |
| | | [kPa/bar] ([psi]) | [kPa/bar] ([psi]) | [kPa/bar] ([psi]) | [kPa/bar] ([psi]) | [kPa/bar] ([psi]) | [kPa/bar] ([psi]) |
| A20NFT with automatic transmission | 225/50 R17, 225/45 R18 | 240/2.4 (35) | 220/2.2 (32) | – | – | 250/2.5 (36) | 300/3.0 (43) |
| | 215/55 R17, 235/45 R18, 245/45 R18, 245/40 R19 | 220/2.2 (32) | 200/2.0 (29) | 270/2.7 (39) | 260/2.6 (38) | 220/2.2 (32) | 270/2.7 (39) |
| | 225/55 R17 | 220/2.2 (32) | 200/2.0 (29) | 300/3.0 (43) | 300/3.0 (43) | 220/2.2 (32) | 270/2.7 (39) |
| | 245/35 R20 | 240/2.4 (35) | 220/2.2 (32) | 270/2.7 (39) | 260/2.6 (38) | 250/2.5 (36) | 300/3.0 (43) |

| Engine | Tyres | Comfort with up to 3 people | | ECO with up to 3 people | | With full load | |
|---|---|---|---|---|---|---|---|
| | | front | rear | front | rear | front | rear |
| | | [kPa/bar] ([psi]) | [kPa/bar] ([psi]) | [kPa/bar] ([psi]) | [kPa/bar] ([psi]) | [kPa/bar] ([psi]) | [kPa/bar] ([psi]) |
| A20DTC, A20DTL | 225/50 R17, 225/45 R18 | 220/2.2 (32) | 200/2.0 (29) | – | – | 220/2.2 (32) | 270/2.7 (39) |
| | 205/60 R16, 215/60 R16, 215/55 R17, 235/45 R18, 245/45 R18, 245/40 R19, 245/35 R20 | 220/2.2 (32) | 200/2.0 (29) | 270/2.7 (39) | 260/2.6 (38) | 220/2.2 (32) | 270/2.7 (39) |
| | 225/55 R17 | 220/2.2 (32) | 200/2.0 (29) | 280/2.8 (41) | 280/2.8 (41) | 220/2.2 (32) | 270/2.7 (39) |

| Engine | Tyres | Comfort with up to 3 people | | ECO with up to 3 people | | With full load | |
|---|---|---|---|---|---|---|---|
| | | front | rear | front | rear | front | rear |
| | | [kPa/bar] ([psi]) | [kPa/bar] ([psi]) | [kPa/bar] ([psi]) | [kPa/bar] ([psi]) | [kPa/bar] ([psi]) | [kPa/bar] ([psi]) |
| A20DTJ, A20DT with manual transmission | 215/60 R16, 225/50 R17, 225/45 R18 | 220/2.2 (32) | 200/2.0 (29) | 270/2.7 (39) | 260/2.6 (38) | 230/2.3 (33) | 280/2.8 (41) |
| | 205/60 R16, 215/55 R17, 235/45 R18, 245/45 R18, 245/40 R19 | 220/2.2 (32) | 200/2.0 (29) | 270/2.7 (39) | 260/2.6 (38) | 220/2.2 (32) | 270/2.7 (39) |
| | 225/55 R17 | 220/2.2 (32) | 200/2.0 (29) | 280/2.8 (41) | 280/2.8 (41) | 220/2.2 (32) | 270/2.7 (39) |
| | 245/35 R20 | 230/2.3 (33) | 210/2.1 (30) | 270/2.7 (39) | 260/2.6 (38) | 230/2.3 (33) | 280/2.8 (41) |

| Engine | Tyres | Comfort with up to 3 people | | ECO with up to 3 people | | With full load | |
|---|---|---|---|---|---|---|---|
| | | front | rear | front | rear | front | rear |
| | | [kPa/bar] ([psi]) | [kPa/bar] ([psi]) | [kPa/bar] ([psi]) | [kPa/bar] ([psi]) | [kPa/bar] ([psi]) | [kPa/bar] ([psi]) |
| A20DTJ, A20DT with automatic transmission | 215/60 R16, 225/50 R17, 225/45 R18 | 230/2.3 (33) | 210/2.1 (30) | 270/2.7 (39) | 260/2.6 (38) | 230/2.3 (33) | 280/2.8 (41) |
| | 205/60 R16, 215/55 R17, 235/45 R18, 245/45 R18, 245/40 R19 | 220/2.2 (32) | 200/2.0 (29) | 270/2.7 (39) | 260/2.6 (38) | 220/2.2 (32) | 270/2.7 (39) |
| | 225/55 R17 | 220/2.2 (32) | 200/2.0 (29) | 280/2.8 (41) | 280/2.8 (41) | 220/2.2 (32) | 270/2.7 (39) |
| | 245/35 R20 | 230/2.3 (33) | 210/2.1 (30) | 270/2.7 (39) | 260/2.6 (38) | 230/2.3 (33) | 280/2.8 (41) |

| Engine | Tyres | Comfort with up to 3 people | | ECO with up to 3 people | | With full load | |
|---|---|---|---|---|---|---|---|
| | | front | rear | front | rear | front | rear |
| | | [kPa/bar] ([psi]) | [kPa/bar] ([psi]) | [kPa/bar] ([psi]) | [kPa/bar] ([psi]) | [kPa/bar] ([psi]) | [kPa/bar] ([psi]) |
| A20DTH with manual transmission | 215/60 R16 | 230/2.3 (33) | 210/2.1 (30) | 270/2.7 (39) | 260/2.6 (38) | 240/2.4 (35) | 290/2.9 (42) |
| | 225/50 R17, 225/45 R 18 | 240/2.4 (35) | 220/2.2 (32) | – | – | 240/2.4 (35) | 290/2.9 (42) |
| | 215/55 R 17, 235/45 R18, 245/45 R18, 245/40 R19 | 220/2.2 (32) | 200/2.0 (29) | 270/2.7 (39) | 260/2.6 (38) | 220/2.2 (32) | 270/2.7 (39) |
| | 225/55 R17 | 220/2.2 (32) | 200/2.0 (29) | 280/2.8 (41) | 280/2.8 (41) | 220/2.2 (32) | 270/2.7 (39) |
| | 245/35 R20 | 220/2.2 (32) | 200/2.0 (29) | 270/2.7 (39) | 260/2.6 (38) | 230/2.3 (33) | 280/2.8 (41) |

| Engine | Tyres | Comfort with up to 3 people | | ECO with up to 3 people | | With full load | |
|---|---|---|---|---|---|---|---|
| | | front | rear | front | rear | front | rear |
| | | [kPa/bar] ([psi]) | [kPa/bar] ([psi]) | [kPa/bar] ([psi]) | [kPa/bar] ([psi]) | [kPa/bar] ([psi]) | [kPa/bar] ([psi]) |
| A20DTH with automatic transmission | 225/50 R17, 225/45 R18 | 240/2.4 (35) | 220/2.2 (32) | – | – | 240/2.4 (35) | 290/2.9 (42) |
| | 215/55 R17, 235/45 R18, 245/45 R18, 245/40 R19 | 220/2.2 (32) | 200/2.0 (29) | 270/2.7 (39) | 260/2.6 (38) | 220/2.2 (32) | 270/2.7 (39) |
| | 225/55 R17 | 220/2.2 (32) | 200/2.0 (29) | 280/2.8 (41) | 280/2.8 (41) | 220/2.2 (32) | 270/2.7 (39) |
| | 245/35 R20 | 220/2.2 (32) | 200/2.0 (29) | 270/2.7 (39) | 260/2.6 (38) | 230/2.3 (33) | 280/2.8 (41) |

| Engine | Tyres | Comfort with up to 3 people | | ECO with up to 3 people | | With full load | |
|---|---|---|---|---|---|---|---|
| | | front | rear | front | rear | front | rear |
| | | [kPa/bar] ([psi]) | [kPa/bar] ([psi]) | [kPa/bar] ([psi]) | [kPa/bar] ([psi]) | [kPa/bar] ([psi]) | [kPa/bar] ([psi]) |
| A20DTH ECOFlex with manual transmission | 225/50 R17, 225/45 R18 | 240/2.4 (35) | 220/2.2 (32) | – | – | 240/2.4 (35) | 290/2.9 (42) |
| | 215/60 R16 | 230/2.3 (33) | 210/2.1 (30) | 270/2.7 (39) | 260/2.6 (38) | 240/2.4 (35) | 290/2.9 (42) |
| | 215/55 R17 | 220/2.2 (32) | 200/2.0 (29) | 270/2.7 (39) | 260/2.6 (38) | 220/2.2 (32) | 270/2.7 (39) |
| | 235/45 R18, 245/40 R19, 245/45 R18 | | | | | | |
| | 225/55 R17 | 220/2.2 (32) | 200/2.0 (29) | 300/3.0 (43) | 300/3.0 (43) | 220/2.2 (32) | 270/2.7 (39) |
| | 245/35 R20 | 220/2.2 (32) | 200/2.0 (29) | 270/2.7 (39) | 260/2.6 (38) | 230/2.3 (33) | 280/2.8 (41) |

| Engine | Tyres | Comfort with up to 3 people | | ECO with up to 3 people | | With full load | |
|---|---|---|---|---|---|---|---|
| | | front | rear | front | rear | front | rear |
| | | [kPa/bar] ([psi]) | [kPa/bar] ([psi]) | [kPa/bar] ([psi]) | [kPa/bar] ([psi]) | [kPa/bar] ([psi]) | [kPa/bar] ([psi]) |
| A20DTR with manual transmission | 215/55 R17, 235/45 R18, 245/45 R18, 245/40 R19 | 220/2.2 (32) | 200/2.0 (29) | 270/2.7 (39) | 260/2.6 (38) | 230/2.3 (33) | 280/2.8 (41) |
| | 225/55 R17 | 220/2.2 (32) | 200/2.0 (29) | 280/2.8 (41) | 280/2.8 (41) | 230/2.3 (33) | 280/2.8 (41) |
| | 225/50 R17, 225/45 R18 | 240/2.4 (34) | 220/2.2 (32) | – | – | 250/2.5 (36) | 300/3.0 (43) |
| | 245/35 R20 | 230/2.3 (33) | 210/2.1 (30) | 270/2.7 (39) | 260/2.6 (38) | 240/2.4 (34) | 290/2.9 (41) |

| Engine | Tyres | Comfort with up to 3 people | | ECO with up to 3 people | | With full load | |
|---|---|---|---|---|---|---|---|
| | | front | rear | front | rear | front | rear |
| | | [kPa/bar] ([psi]) | [kPa/bar] ([psi]) | [kPa/bar] ([psi]) | [kPa/bar] ([psi]) | [kPa/bar] ([psi]) | [kPa/bar] ([psi]) |
| A20DTR with automatic transmission | 215/55 R17, 235/45 R18, 245/45 R18, 245/40 R19 | 220/2.2 (32) | 200/2.0 (29) | 270/2.7 (39) | 260/2.6 (38) | 230/2.3 (33) | 280/2.8 (41) |
| | 225/55 R17 | 220/2.2 (32) | 200/2.0 (29) | 280/2.8 (41) | 280/2.8 (41) | 230/2.3 (33) | 280/2.8 (41) |
| | 225/50 R17, 225/45 R18 | 240/2.4 (34) | 220/2.2 (32) | – | – | 250/2.5 (36) | 300/3.0 (43) |
| | 245/35 R20 | 230/2.3 (33) | 210/2.1 (30) | 270/2.7 (39) | 260/2.6 (38) | 240/2.4 (34) | 290/2.9 (41) |
| All | Temporary spare wheel | 420/4.2 (61) | 420/4.2 (61) | – | – | 420/4.2 (61) | 420/4.2 (61) |

Sports Tourer

| Engine | Tyres | Comfort with up to 3 people | | ECO with up to 3 people | | With full load | |
|---|---|---|---|---|---|---|---|
| | | front | rear | front | rear | front | rear |
| | | [kPa/bar] ([psi]) | [kPa/bar] ([psi]) | [kPa/bar] ([psi]) | [kPa/bar] ([psi]) | [kPa/bar] ([psi]) | [kPa/bar] ([psi]) |
| A16XER | 205/60 R16, 215/60 R16, 215/55 R17, 225/55 R17, 225/50 R17, 225/45 R18, 235/45 R18 245/45 R18, 245/40 R19, 245/35 R20 | 220/2.2 (32) | 240/2.4 (34) | 270/2.7 (39) | 290/2.9 (41) | 220/2.2 (32) | 290/2.9 (42) |

| Engine | Tyres | Comfort with up to 3 people | | ECO with up to 3 people | | With full load | |
|---|---|---|---|---|---|---|---|
| | | front | rear | front | rear | front | rear |
| | | [kPa/bar] ([psi]) | [kPa/bar] ([psi]) | [kPa/bar] ([psi]) | [kPa/bar] ([psi]) | [kPa/bar] ([psi]) | [kPa/bar] ([psi]) |
| A14NET | 205/60 R16, | 220/2.2 (32) | 240/2.4 (34) | 270/2.7 (39) | 290/2.9 (42) | 220/2.2 (32) | 290/2.9 (42) |
| | 215/60 R16, | | | | | | |
| | 215/55 R17, | | | | | | |
| | 225/55 R17, | | | | | | |
| | 225/50 R17, | | | | | | |
| | 225/45 R18, | | | | | | |
| | 235/45 R18, | | | | | | |
| | 245/35 R20, | | | | | | |
| | 245/40 R20 | | | | | | |

| Engine | Tyres | Comfort with up to 3 people | | ECO with up to 3 people | | With full load | |
|---|---|---|---|---|---|---|---|
| | | front | rear | front | rear | front | rear |
| | | [kPa/bar] ([psi]) | [kPa/bar] ([psi]) | [kPa/bar] ([psi]) | [kPa/bar] ([psi]) | [kPa/bar] ([psi]) | [kPa/bar] ([psi]) |
| A18XER | 205/60 R16, | 220/2.2 (32) | 240/2.4 (34) | 270/2.7 (39) | 290/2.9 (41) | 220/2.2 (32) | 290/2.9 (42) |
| | 215/60 R16, | | | | | | |
| | 215/55 R17, | | | | | | |
| | 225/55 R17, | | | | | | |
| | 225/50 R17, | | | | | | |
| | 225/45 R18, | | | | | | |
| | 235/45 R18, | | | | | | |
| | 245/45 R18, | | | | | | |
| | 245/40 R19, | | | | | | |
| | 245/35 R20 | | | | | | |

| Engine | Tyres | Comfort with up to 3 people | | ECO with up to 3 people | | With full load | |
|---|---|---|---|---|---|---|---|
| | | front | rear | front | rear | front | rear |
| | | [kPa/bar] ([psi]) | [kPa/bar] ([psi]) | [kPa/bar] ([psi]) | [kPa/bar] ([psi]) | [kPa/bar] ([psi]) | [kPa/bar] ([psi]) |
| A16 LET | 215/55 R17, 225/55 R17, 225/50 R17, 235/45 R18, 245/45 R18, 245/40 R19, 245/35 R20 | 220/2.2 (32) | 240/2.4 (34) | 270/2.7 (39) | 290/2.9 (42) | 220/2.2 (32) | 290/2.9 (42) |
| | 225/45 R18 | 230/2.3 (33) | 250/2.5 (36) | – | – | 240/2.4 (34) | 310/3.1 (45) |

| Engine | Tyres | Comfort with up to 3 people | | ECO with up to 3 people | | With full load | |
|---|---|---|---|---|---|---|---|
| | | front | rear | front | rear | front | rear |
| | | [kPa/bar] ([psi]) | [kPa/bar] ([psi]) | [kPa/bar] ([psi]) | [kPa/bar] ([psi]) | [kPa/bar] ([psi]) | [kPa/bar] ([psi]) |
| A20NHT, A20NFT | 225/50 R17, 235/45 R18, 245/35 R20 | 240/2.4 (34) | 260/2.6 (38) | 270/2.7 (39) | 290/2.9 (42) | 250/2.5 (36) | 320/3.2 (46) |
| | 225/45 R18 | 270/2.7 (39) | 290/2.9 (42) | – | – | 280/2.8 (40) | 350/3.5 (51) |
| | 215/55 R17 | 230/2.3 (33) | 250/2.5 (36) | 270/2.7 (39) | 290/2.9 (42) | 250/2.5 (36) | 320/3.2 (46) |
| | 225/55 R17, 245/40 R19 | 220/2.2 (32) | 240/2.4 (34) | 270/2.7 (39) | 290/2.9 (42) | 220/2.2 (32) | 290/2.9 (42) |
| | 245/45 R18 | 220/2.2 (32) | 240/2.4 (34) | 270/2.7 (39) | 290/2.9 (42) | 230/2.3 (33) | 300/3.0 (43) |

| Engine | Tyres | Comfort with up to 3 people | | ECO with up to 3 people | | With full load | |
|---|---|---|---|---|---|---|---|
| | | front | rear | front | rear | front | rear |
| | | [kPa/bar] ([psi]) | [kPa/bar] ([psi]) | [kPa/bar] ([psi]) | [kPa/bar] ([psi]) | [kPa/bar] ([psi]) | [kPa/bar] ([psi]) |
| A20DTC, A20DTL | 225/50 R17, 215/55 R17, 235/45 R18 | 220/2.2 (32) | 240/2.4 (34) | 270/2.7 (39) | 290/2.9 (42) | 230/2.3 (33) | 300/3.0 (43) |
| | 225/45 R18 | 250/2.5 (36) | 270/2.7 (39) | – | – | 250/2.5 (36) | 320/3.2 (46) |
| | 245/45 R18, 245/40 R19, 245/35 R20 | 220/2.2 (32) | 240/2.4 (35) | 270/2.7 (39) | 290/2.9 (42) | 220/2.2 (32) | 290/2.9 (42) |
| | 225/55 R17 | 220/2.2 (32) | 240/2.4 (35) | 290/2.9 (42) | 320/3.2 (46) | 220/2.2 (32) | 290/2.9 (42) |

| Engine | Tyres | Comfort with up to 3 people | | ECO with up to 3 people | | With full load | |
|---|---|---|---|---|---|---|---|
| | | front | rear | front | rear | front | rear |
| | | [kPa/bar] ([psi]) | [kPa/bar] ([psi]) | [kPa/bar] ([psi]) | [kPa/bar] ([psi]) | [kPa/bar] ([psi]) | [kPa/bar] ([psi]) |
| A20DTJ, A20DT with manual transmission | 225/45 R18 | 250/2.5 (36) | 270/2.7 (39) | – | – | 250/2.5 (36) | 320/3.2 (46) |
| | 215/55 R17, 225/50 R17, 235/45 R18 | 220/2.2 (32) | 240/2.4 (35) | 270/2.7 (39) | 290/2.9 (42) | 230/2.3 (33) | 300/3.0 (43) |
| | 225/55 R17 | 220/2.2 (32) | 240/2.4 (35) | 290/2.9 (42) | 320/3.2 (46) | 220/2.2 (32) | 290/2.9 (42) |
| | 245/45 R18, 245/40 R19, 245/35 R20 | 220/2.2 (32) | 240/2.4 (35) | 270/2.7 (39) | 290/2.9 (42) | 220/2.2 (32) | 290/2.9 (42) |

| Engine | Tyres | Comfort with up to 3 people | | ECO with up to 3 people | | With full load | |
|---|---|---|---|---|---|---|---|
| | | front | rear | front | rear | front | rear |
| | | [kPa/bar] ([psi]) | [kPa/bar] ([psi]) | [kPa/bar] ([psi]) | [kPa/bar] ([psi]) | [kPa/bar] ([psi]) | [kPa/bar] ([psi]) |
| A20DTJ, A20DT with automatic transmission | 225/45 R18 | 250/2.5 (36) | 270/2.7 (39) | – | – | 250/2.5 (36) | 320/3.2 (46) |
| | 215/55 R17, 225/50 R17, 245/35 R20, 235/45 R18 | 230/2.3 (33) | 250/2.5 (36) | 270/2.7 (39) | 290/2.9 (42) | 230/2.3 (33) | 300/3.0 (43) |
| | 225/55 R17 | 220/2.2 (32) | 240/2.4 (35) | 290/2.9 (42) | 320/3.2 (46) | 220/2.2 (32) | 290/2.9 (42) |
| | 245/45 R18, 245/40 R19 | 220/2.2 (32) | 240/2.4 (35) | 270/2.7 (39) | 290/2.9 (42) | 220/2.2 (32) | 290/2.9 (42) |

| Engine | Tyres | Comfort with up to 3 people | | ECO with up to 3 people | | With full load | |
|---|---|---|---|---|---|---|---|
| | | front | rear | front | rear | front | rear |
| | | [kPa/bar] ([psi]) | [kPa/bar] ([psi]) | [kPa/bar] ([psi]) | [kPa/bar] ([psi]) | [kPa/bar] ([psi]) | [kPa/bar] ([psi]) |
| A20DTH, A20DTH ECOFlex with manual transmission | 225/45 R 18 | 250/2.5 (36) | 270/2.7 (39) | – | – | 250/2.5 (36) | 320/3.2 (46) |
| | 215/55 R 17, 225/50 R17 | 230/2.3 (33) | 250/2.5 (36) | 270/2.7 (39) | 290/2.9 (42) | 240/2.4 (35) | 310/3.1 (45) |
| | 225/55 R 17 | 220/2.2 (32) | 240/2.4 (35) | 290/2.9 (42) | 320/3.2 (46) | 220/2.2 (32) | 290/2.9 (42) |
| | 235/45 R18 | 230/2.3 (33) | 250/2.5 (36) | 270/2.7 (39) | 290/2.9 (42) | 230/2.3 (33) | 300/3.0 (43) |
| | 245/45 R18, 245/40 R19 | 220/2.2 (32) | 240/2.4 (35) | 270/2.7 (39) | 290/2.9 (42) | 220/2.2 (32) | 290/2.9 (42) |
| | 245/35 R20 | 220/2.2 (32) | 240/2.4 (35) | 270/2.7 (39) | 290/2.9 (42) | 230/2.3 (33) | 300/3.0 (43) |

| Engine | Tyres | Comfort with up to 3 people | | ECO with up to 3 people | | With full load | |
|---|---|---|---|---|---|---|---|
| | | front | rear | front | rear | front | rear |
| | | [kPa/bar] ([psi]) | [kPa/bar] ([psi]) | [kPa/bar] ([psi]) | [kPa/bar] ([psi]) | [kPa/bar] ([psi]) | [kPa/bar] ([psi]) |
| A20DTH with automatic transmission | 225/45 R18 | 260/2.6 (38) | 280/2.8 (41) | – | – | 260/2.6 (38) | 330/3.3 (48) |
| | 215/55 R17, 225/50 R17, 235/45 R18 | 230/2.3 (33) | 250/2.5 (36) | 270/2.7 (39) | 290/2.9 (42) | 240/2.4 (35) | 310/3.1 (45) |
| | 225/55 R17 | 220/2.2 (32) | 240/2.4 (35) | 290/2.9 (42) | 320/3.2 (46) | 220/2.2 (32) | 290/2.9 (42) |
| | 245/45 R18, 245/40 R19 | 220/2.2 (32) | 240/2.4 (35) | 270/2.7 (39) | 290/2.9 (42) | 220/2.2 (32) | 290/2.9 (42) |
| | 245/35 R20 | 230/2.3 (33) | 250/2.5 (36) | 270/2.7 (39) | 290/2.9 (42) | 230/2.3 (33) | 300/3.0 (43) |

| Engine | Tyres | Comfort with up to 3 people | | ECO with up to 3 people | | With full load | |
|---|---|---|---|---|---|---|---|
| | | front | rear | front | rear | front | rear |
| | | [kPa/bar] ([psi]) | [kPa/bar] ([psi]) | [kPa/bar] ([psi]) | [kPa/bar] ([psi]) | [kPa/bar] ([psi]) | [kPa/bar] ([psi]) |
| A20DTR with manual transmission | 215/55 R17, 225/50 R17 | 240/2.4 (35) | 260/2.6 (38) | 270/2.7 (39) | 290/2.9 (42) | 240/2.4 (35) | 310/3.1 (45) |
| | 235/45 R18 | 240/2.4 (35) | 260/2.6 (38) | 270/2.7 (39) | 290/2.9 (42) | 250/2.5 (36) | 320/3.2 (46) |
| | 245/45 R18, 245/40 R19 | 220/2.2 (32) | 240/2.4 (35) | 270/2.7 (39) | 290/2.9 (42) | 220/2.2 (32) | 290/2.9 (42) |
| | 225/55 R17 | 220/2.2 (32) | 240/2.4 (35) | 290/2.9 (42) | 320/3.2 (46) | 220/2.2 (32) | 290/2.9 (42) |
| | 225/45 R18 | 250/2.5 (36) | 270/2.7 (39) | – | – | 260/2.6 (38) | 330/3.3 (48) |
| | 245/35 R20 | 230/2.3 (33) | 250/2.5 (36) | 270/2.7 (39) | 290/2.9 (42) | 230/2.3 (33) | 300/3.0 (43) |

| Engine | Tyres | Comfort with up to 3 people | | ECO with up to 3 people | | With full load | |
|---|---|---|---|---|---|---|---|
| | | front | rear | front | rear | front | rear |
| | | [kPa/bar] ([psi]) | [kPa/bar] ([psi]) | [kPa/bar] ([psi]) | [kPa/bar] ([psi]) | [kPa/bar] ([psi]) | [kPa/bar] ([psi]) |
| A20DTR with automatic transmission | 215/55 R17, 225/50 R17, 235/45 R18 | 240/2.4 (35) | 260/2.6 (38) | 270/2.7 (39) | 290/2.9 (42) | 250/2.5 (36) | 320/3.2 (46) |
| | 245/45 R18, 245/40 R19 | 220/2.2 (32) | 240/2.4 (35) | 270/2.7 (39) | 290/2.9 (42) | 220/2.2 (32) | 290/2.9 (42) |
| | 225/55 R17 | 220/2.2 (32) | 240/2.4 (35) | 290/2.9 (42) | 320/3.2 (46) | 220/2.2 (32) | 290/2.9 (42) |
| | 225/45 R18 | 260/2.6 (38) | 280/2.8 (41) | – | – | 260/2.6 (38) | 330/3.3 (48) |
| | 245/35 R20 | 230/2.3 (33) | 250/2.5 (36) | 270/2.7 (39) | 290/2.9 (42) | 240/2.4 (35) | 310/3.1 (45) |
| All | Temporary spare wheel | 420/4.2 (61) | 420/4.2 (61) | – | – | 420/4.2 (61) | 420/4.2 (61) |

## Tyre pressures for vehicles with all-wheel drive

### 5-door Hatchback/4-door Saloon

| | | Comfort with up to 3 people | | ECO with up to 3 people | | With full load | |
|---|---|---|---|---|---|---|---|
| Engine | Tyres | front | rear | front | rear | front | rear |
| | | [kPa/bar] ([psi]) | [kPa/bar] ([psi]) | [kPa/bar] ([psi]) | [kPa/bar] ([psi]) | [kPa/bar] ([psi]) | [kPa/bar] ([psi]) |
| A20NHT with manual transmission | 225/50 R17, 225/45 R18 | 250/2.5 (36) | 230/2.3 (33) | – | – | 250/2.5 (36) | 300/3.0 (43) |
| | 215/55 R17, 225/45 R18, 225/55 R17, 235/45 R18, 245/45 R18, 245/40 R19 | 230/2.3 (33) | 210/2.1 (30) | 270/2.7 (39) | 260/2.6 (38) | 240/2.4 (35) | 290/2.9 (42) |
| | 245/35 R20 | 240/2.4 (35) | 220/2.2 (32) | 270/2.7 (39) | 260/2.6 (38) | 250/2.5 (36) | 300/3.0 (43) |

| Engine | Tyres | Comfort with up to 3 people | | ECO with up to 3 people | | With full load | |
|---|---|---|---|---|---|---|---|
| | | front | rear | front | rear | front | rear |
| | | [kPa/bar] ([psi]) | [kPa/bar] ([psi]) | [kPa/bar] ([psi]) | [kPa/bar] ([psi]) | [kPa/bar] ([psi]) | [kPa/bar] ([psi]) |
| A20NHT with automatic transmission | 225/50 R17, 225/45 R18 | 260/2.6 (38) | 240/2.4 (35) | – | – | 260/2.6 (38) | 310/3.1 (45) |
| | 215/55 R17, 225/55 R17, 235/45 R18, 245/45 R18, 245/40 R19 | 230/2.3 (33) | 210/2.1 (30) | 270/2.7 (39) | 260/2.6 (38) | 240/2.4 (35) | 290/2.9 (42) |
| | 245/35 R20 | 250/2.5 (36) | 230/2.3 (33) | 270/2.7 (39) | 260/2.6 (38) | 250/2.5 (36) | 300/3.0 (43) |

| Engine | Tyres | Comfort with up to 3 people | | ECO with up to 3 people | | With full load | |
|---|---|---|---|---|---|---|---|
| | | front | rear | front | rear | front | rear |
| | | [kPa/bar] ([psi]) | [kPa/bar] ([psi]) | [kPa/bar] ([psi]) | [kPa/bar] ([psi]) | [kPa/bar] ([psi]) | [kPa/bar] ([psi]) |
| A20DTR with manual transmission | 225/50 R17, | 270/2.7 (39) | 250/2.5 (36) | – | – | 280/2.8 (41) | 330/3.3 (48) |
| | 225/45 R18 | | | | | | |
| | 215/55 R17, | | | | | | |
| | 225/55 R17, | 220/2.2 (32) | 200/2.0 (29) | 270/2.7 (39) | 260/2.6 (38) | 230/2.3 (33) | 280/2.8 (41) |
| | 245/45 R18, | | | | | | |
| | 245/40 R19 | | | | | | |
| | 235/45 R18, | 240/2.4 (35) | 220/2.2 (32) | 270/2.7 (39) | 260/2.6 (38) | 260/2.6 (38) | 310/3.1 (45) |
| | 245/35 R20 | | | | | | |

| Engine | Tyres | Comfort with up to 3 people | | ECO with up to 3 people | | With full load | |
|---|---|---|---|---|---|---|---|
| | | front | rear | front | rear | front | rear |
| | | [kPa/bar] ([psi]) | [kPa/bar] ([psi]) | [kPa/bar] ([psi]) | [kPa/bar] ([psi]) | [kPa/bar] ([psi]) | [kPa/bar] ([psi]) |
| A20DTR with automatic transmission | 225/50 R17, 225/45 R18 215/55 R17, | 270/2.7 (39) | 250/2.5 (36) | – | – | 280/2.8 (41) | 330/3.3 (48) |
| | 225/55 R17, 245/45 R18, 245/40 R19 | 230/2.3 (33) | 210/2.1 (30) | 270/2.7 (39) | 260/2.6 (38) | 240/2.4 (35) | 290/2.9 (42) |
| | 235/45 R18, 245/35 R20 | 240/2.4 (35) | 220/2.2 (32) | 270/2.7 (39) | 260/2.6 (38) | 260/2.6 (38) | 310/3.1 (45) |

| Engine | Tyres | Comfort with up to 3 people | | ECO with up to 3 people | | With full load | |
|---|---|---|---|---|---|---|---|
| | | front | rear | front | rear | front | rear |
| | | [kPa/bar] ([psi]) | [kPa/bar] ([psi]) | [kPa/bar] ([psi]) | [kPa/bar] ([psi]) | [kPa/bar] ([psi]) | [kPa/bar] ([psi]) |
| A20DTH with manual transmission | 215/55 R17 | 250/2.5(36) | 230/2.3 (33) | – | – | 260/2.6 (38) | 310/3.1 (45) |
| | 225/45 R18 | | | | | | |
| | 225/50 R17 | | | | | | |
| | 225/55 R17 | 220/2.2 (32) | 200/2.0 (29) | 270/2.7 (39) | 260/2.6 (38) | 230/2.3 (33) | 280/2.8 (41) |
| | 245/40 R19 | | | | | | |
| | 245/45 R18 | | | | | | |
| | 235/45 R18 | 240/2.4 (35) | 220/2.2 (32) | 270/2.7 (39) | 260/2.6 (38) | 250/2.5 (36) | 300/3.0 (43) |
| | 245/35 R20 | | | | | | |

| Engine | Tyres | Comfort with up to 3 people | | ECO with up to 3 people | | With full load | |
|---|---|---|---|---|---|---|---|
| | | front | rear | front | rear | front | rear |
| | | [kPa/bar] ([psi]) | [kPa/bar] ([psi]) | [kPa/bar] ([psi]) | [kPa/bar] ([psi]) | [kPa/bar] ([psi]) | [kPa/bar] ([psi]) |
| A20DTH with automatic transmission | 215/55 R17 | 250/2.5(36) | 230/2.3 (33) | – | – | 260/2.6 (38) | 310/3.1 (45) |
| | 225/45 R18 | | | | | | |
| | 225/50 R17 | | | | | | |
| | 225/55 R17 | 230/2.3 (33) | 200/2.0 (29) | 270/2.7 (39) | 260/2.6 (38) | 240/2.4 (35) | 290/2.9 (43) |
| | 245/40 R19 | | | | | | |
| | 245/45 R18 | | | | | | |
| | 235/45 R18 | 240/2.4 (35) | 220/2.2 (32) | 270/2.7 (39) | 260/2.6 (38) | 250/2.5 (38) | 300/3.0 (45) |
| | 245/35 R20 | | | | | | |

| Engine | Tyres | Comfort with up to 3 people | | ECO with up to 3 people | | With full load | |
|---|---|---|---|---|---|---|---|
| | | front | rear | front | rear | front | rear |
| | | [kPa/bar] ([psi]) | [kPa/bar] ([psi]) | [kPa/bar] ([psi]) | [kPa/bar] ([psi]) | [kPa/bar] ([psi]) | [kPa/bar] ([psi]) |
| A28NET with manual transmission | 225/50 R17, 225/45 R18 | 270/2.7 (39) | 250/2.5 (36) | – | – | 270/2.7 (39) | 320/3.2 (46) |
| | 215/55 R17, 225/55 R17, 235/45 R18, 245/45 R18, 245/40 R19 | 260/2.6 (38) | 240/2.4 (35) | – | – | 270/2.7 (39) | 320/3.2 (46) |
| | 245/35 R20 | 270/2.7 (39) | 250/2.5 (36) | – | – | 280/2.8 (41) | 330/3.3 (48) |

| Engine | Tyres | Comfort with up to 3 people | | ECO with up to 3 people | | With full load | |
|---|---|---|---|---|---|---|---|
| | | front | rear | front | rear | front | rear |
| | | [kPa/bar] ([psi]) | [kPa/bar] ([psi]) | [kPa/bar] ([psi]) | [kPa/bar] ([psi]) | [kPa/bar] ([psi]) | [kPa/bar] ([psi]) |
| A28NET with automatic transmission | 225/50 R17, | 270/2.7 (39) | 250/2.5 (36) | – | – | 280/2.8 (41) | 330/3.3 (48) |
| | 225/45 R18, | | | | | | |
| | 215/55 R17, | | | | | | |
| | 225/55 R17, | | | | | | |
| | 235/45 R18, | | | | | | |
| | 245/45 R18, | | | | | | |
| | 245/40 R19 | | | | | | |
| | 245/35 R20 | 260/2.6 (38) | 240/2.4 (35) | – | – | 270/2.7 (39) | 320/3.2 (46) |
| A28 NER with manual transmission | 235/45 R18, | 250/2.5 (36) | 230/2.3 (33) | – | – | 260/2.6 (38) | 320/3.2 (46) |
| | 245/40 R19 | | | | | | |
| | 255/35 R20 | 270/2.7 (39) | 250/2.5 (36) | – | – | 280/2.8 (41) | 330/3.3 (48) |

| Engine | Tyres | Comfort with up to 3 people | | ECO with up to 3 people | | With full load | |
|---|---|---|---|---|---|---|---|
| | | front | rear | front | rear | front | rear |
| | | [kPa/bar] ([psi]) | [kPa/bar] ([psi]) | [kPa/bar] ([psi]) | [kPa/bar] ([psi]) | [kPa/bar] ([psi]) | [kPa/bar] ([psi]) |
| A28 NER with automatic transmission | 235/45 R18, 245/40 R19 | 250/2.5 (36) | 230/2.3 (33) | – | – | 260/2.6 (38) | 320/3.2 (46) |
| | 255/35 R20 | 270/2.7 (39) | 250/2.5 (36) | – | – | 280/2.8 (41) | 330/3.3 (48) |
| All | Temporary spare wheel | 420/4.2 (61) | 420/4.2 (61) | – | – | 420/4.2 (61) | 420/4.2 (61) |

Sports Tourer

| Engine | Tyres | Comfort with up to 3 people | | ECO with up to 3 people | | With full load | |
|---|---|---|---|---|---|---|---|
| | | front | rear | front | rear | front | rear |
| | | [kPa/bar] ([psi]) | [kPa/bar] ([psi]) | [kPa/bar] ([psi]) | [kPa/bar] ([psi]) | [kPa/bar] ([psi]) | [kPa/bar] ([psi]) |
| A20NHT with manual transmission | 225/50 R17, 215/55 R17 | 250/2.5 (36) | 250/2.5 (36) | 270/2.7 (39) | 290/2.9 (42) | 250/2.5 (36) | 320/3.2 (46) |
| | 225/55 R17 | 220/2.2 (32) | 220/2.2 (32) | 270/2.7 (39) | 290/2.9 (42) | 220/2.2 (32) | 290/2.9 (42) |
| | 225/45 R18 | 270/2.7 (39) | 270/2.7 (39) | – | – | 280/2.8 (41) | 340/3.4 (49) |
| | 235/45 R18 | 250/2.5 (36) | 250/2.5 (36) | 270/2.7 (39) | 290/2.9 (42) | 260/2.6 (38) | 330/3.3 (48) |
| | 245/45 R18 | 220/2.2 (32) | 220/2.2 (32) | 270/2.7 (39) | 290/2.9 (42) | 230/2.3 (33) | 300/3.0 (43) |
| | 245/40 R19 | 220/2.2 (32) | 220/2.2 (32) | 270/2.7 (39) | 290/2.9 (42) | 220/2.2 (32) | 290/2.9 (42) |
| | 245/35 R20 | 240/2.4 (35) | 240/2.4 (35) | 270/2.7 (39) | 290/2.9 (42) | 240/2.4 (35) | 310/3.1 (45) |

| Engine | Tyres | Comfort with up to 3 people | | ECO with up to 3 people | | With full load | |
|---|---|---|---|---|---|---|---|
| | | front | rear | front | rear | front | rear |
| | | [kPa/bar] ([psi]) | [kPa/bar] ([psi]) | [kPa/bar] ([psi]) | [kPa/bar] ([psi]) | [kPa/bar] ([psi]) | [kPa/bar] ([psi]) |
| A20NHT with automatic transmission | 225/50 R17, 215/55 R17 | 250/2.5 (36) | 250/2.5 (36) | 270/2.7 (39) | 290/2.9 (42) | 260/2.6 (38) | 330/3.3 (48) |
| | 225/55 R17 | 220/2.2 (32) | 220/2.2 (32) | 270/2.7 (39) | 290/2.9 (42) | 220/2.2 (32) | 290/2.9 (42) |
| | 225/45 R18 | 270/2.7 (39) | 270/2.7 (39) | – | – | 280/2.8 (41) | 340/3.4 (49) |
| | 235/45 R18 | 250/2.5 (36) | 250/2.5 (36) | 270/2.7 (39) | 290/2.9 (42) | 260/2.6 (38) | 330/3.3 (48) |
| | 245/45 R18 | 220/2.2 (32) | 220/2.2 (32) | 270/2.7 (39) | 290/2.9 (42) | 230/2.3 (33) | 300/3.0 (43) |
| | 245/40 R19 | 220/2.2 (32) | 220/2.2 (32) | 270/2.7 (39) | 290/2.9 (42) | 220/2.2 (32) | 290/2.9 (42) |
| | 245/35 R20 | 240/2.4 (35) | 240/2.4 (35) | 270/2.7 (39) | 290/2.9 (42) | 250/2.5 (36) | 320/3.2 (46) |

| Engine | Tyres | Comfort with up to 3 people | | ECO with up to 3 people | | With full load | |
|---|---|---|---|---|---|---|---|
| | | front | rear | front | rear | front | rear |
| | | [kPa/bar] ([psi]) | [kPa/bar] ([psi]) | [kPa/bar] ([psi]) | [kPa/bar] ([psi]) | [kPa/bar] ([psi]) | [kPa/bar] ([psi]) |
| A20DTR | 215/55 R17, 225/50 R17, 235/45 R18, 245/35 R20 | 240/2.4 (35) | 240/2.4 (35) | 270/2.7 (39) | 290/2.9 (42) | 250/2.5 (36) | 320/3.2 (46) |
| | 225/55 R17 245/40 R19 | 220/2.2 (32) | 220/2.2 (32) | 270/2.7 (39) | 290/2.9 (42) | 220/2.2 (32) | 290/2.9 (42) |
| | 245/45 R18 | 220/2.2 (32) | 220/2.2 (32) | 270/2.7 (39) | 290/2.9 (42) | 230/2.3 (33) | 300/3.0 (43) |
| | 225/45 R 18 | 270/2.7 (39) | 270/2.7 (39) | – | – | 280/2.8 (41) | 340/3.4 (49) |

| Engine | Tyres | Comfort with up to 3 people | | ECO with up to 3 people | | With full load | |
|---|---|---|---|---|---|---|---|
| | | front | rear | front | rear | front | rear |
| | | [kPa/bar] ([psi]) | [kPa/bar] ([psi]) | [kPa/bar] ([psi]) | [kPa/bar] ([psi]) | [kPa/bar] ([psi]) | [kPa/bar] ([psi]) |
| A20DTH with manual transmission | 225/55 R17 | 220/2.2 (32) | 220/2.2 (32) | 270/2.7 (39) | 290/2.9 (42) | 220/2.2 (32) | 290/2.9 (42) |
| | 215/55 R17 | 240/2.4 (35) | 240/2.4 (35) | 270/2.7 (39) | 290/2.9 (42) | 250/2.5 (36) | 320/3.2 (46) |
| | 225/50 R17 | | | | | | |
| | 245/45 R18 | 220/2.2 (32) | 220/2.2 (32) | 270/2.7 (39) | 290/2.9 (42) | 230/2.3 (33) | 300/3.0 (43) |
| | 245/40 R19 | 220/2.2 (32) | 220/2.2 (32) | 270/2.7 (39) | 290/2.9 (42) | 220/2.2 (32) | 290/2.9 (42) |
| | 235/45 R18 | 240/2.4 (35) | 240/2.4 (35) | 270/2.7 (39) | 290/2.9 (42) | 250/2.5 (36) | 320/3.2 (46) |
| | 245/35 R20 | | | | | | |
| | 225/45 R18 | 270/2.7 (39) | 270/2.7 (39) | – | – | 280/2.8 (41) | 340/3.4 (49) |

| Engine | Tyres | Comfort with up to 3 people | | ECO with up to 3 people | | With full load | |
|---|---|---|---|---|---|---|---|
| | | front | rear | front | rear | front | rear |
| | | [kPa/bar] ([psi]) | [kPa/bar] ([psi]) | [kPa/bar] ([psi]) | [kPa/bar] ([psi]) | [kPa/bar] ([psi]) | [kPa/bar] ([psi]) |
| A20DTH with automatic transmission | 225/55 R17 | 220/2.2 (32) | 220/2.2 (32) | 270/2.7 (39) | 290/2.9 (42) | 220/2.2 (32) | 290/2.9 (42) |
| | 215/55 R17 | 240/2.4 (35) | 240/2.4 (35) | 270/2.7 (39) | 290/2.9 (42) | 250/2.5 (36) | 320/3.2 (46) |
| | 225/50 R17 | | | | | | |
| | 245/45 R18 | 220/2.2 (32) | 220/2.2 (32) | 270/2.7 (39) | 290/2.9 (42) | 230/2.3 (33) | 300/3.0 (43) |
| | 245/40 R19 | 220/2.2 (32) | 220/2.2 (32) | 270/2.7 (39) | 290/2.9 (42) | 220/2.2 (32) | 290/2.9 (42) |
| | 235/45 R18 | 240/2.4 (35) | 240/2.4 (35) | 270/2.7 (39) | 290/2.9 (42) | 250/2.5 (36) | 320/3.2 (46) |
| | 245/35 R20 | | | | | | |
| | 225/45 R18 | 270/2.7 (39) | 270/2.7 (39) | – | – | 280/2.8 (41) | 340/3.4 (49) |

| Engine | Tyres | Comfort with up to 3 people | | ECO with up to 3 people | | With full load | |
|---|---|---|---|---|---|---|---|
| | | front | rear | front | rear | front | rear |
| | | [kPa/bar] ([psi]) | [kPa/bar] ([psi]) | [kPa/bar] ([psi]) | [kPa/bar] ([psi]) | [kPa/bar] ([psi]) | [kPa/bar] ([psi]) |
| A28NET with manual transmission | 215/55 R17, 225/50 R17, 235/45 R18 | 280/2.8 (41) | 280/2.8 (41) | – | – | 300/3.0 (43) | 340/3.4 (49) |
| | 225/55 R17 | 250/2.5 (36) | 250/2.5 (36) | 270/2.7 (39) | 290/2.9 (42) | 270/2.7 (39) | 340/3.4 (49) |
| | 225/45 R18, 245/35 R20 | 270/2.7 (39) | 270/2.7 (39) | – | – | 280/2.8 (41) | 340/3.4 (49) |
| | 245/45 R18 | 260/2.6 (38) | 260/2.6 (38) | – | – | 280/2.8 (41) | 340/3.4 (49) |
| | 245/40 R19 | 240/2.4 (35) | 240/2.4 (35) | – | – | 250/2.5 (36) | 320/3.2 (46) |

| Engine | Tyres | Comfort with up to 3 people | | ECO with up to 3 people | | With full load | |
|---|---|---|---|---|---|---|---|
| | | front | rear | front | rear | front | rear |
| | | [kPa/bar] ([psi]) | [kPa/bar] ([psi]) | [kPa/bar] ([psi]) | [kPa/bar] ([psi]) | [kPa/bar] ([psi]) | [kPa/bar] ([psi]) |
| A28NET with automatic transmission | 215/55 R17, 225/50 R17, 235/45 R18 | 280/2.8 (41) | 280/2.8 (41) | – | – | 300/3.0 (43) | 340/3.4 (49) |
| | 225/55 R17 | 260/2.6 (38) | 260/2.6 (38) | 270/2.7 (39) | 290/2.9 (42) | 270/2.7 (39) | 340/3.4 (49) |
| | 225/45 R18, 245/35 R20 | 270/2.7 (39) | 270/2.7 (39) | – | – | 280/2.8 (41) | 340/3.4 (49) |
| | 245/45 R18 | 270/2.7 (39) | 270/2.7 (39) | – | – | 280/2.8 (41) | 340/3.4 (49) |
| | 245/40 R19 | 240/2.4 (35) | 240/2.4 (35) | – | – | 260/2.6 (38) | 330/3.3 (48) |
| A28 NER with manual transmission | 235/45 R18, 245/40 R19 | 250/2.5 (36) | 230/2.3 (33) | – | – | 260/2.6 (38) | 330/3.3 (48) |
| | 255/35 R20 | 270/2.7 (39) | 250/2.5 (36) | – | – | 280/2.8 (41) | 340/3.4 (49) |

| Engine | Tyres | Comfort with up to 3 people | | ECO with up to 3 people | | With full load | |
|---|---|---|---|---|---|---|---|
| | | front | rear | front | rear | front | rear |
| | | [kPa/bar] ([psi]) | [kPa/bar] ([psi]) | [kPa/bar] ([psi]) | [kPa/bar] ([psi]) | [kPa/bar] ([psi]) | [kPa/bar] ([psi]) |
| A28 NER with automatic transmission | 235/45 R18, 245/40 R19 | 250/2.5 (36) | 230/2.3 (33) | – | – | 260/2.6 (38) | 330/3.3 (48) |
| | 255/35 R20 | 270/2.7 (39) | 250/2.5 (36) | – | – | 280/2.8 (41) | 340/3.4 (49) |
| All | Temporary spare wheel | 420/4.2 (61) | 420/4.2 (61) | – | – | 420/4.2 (61) | 420/4.2 (61) |

## Towing hitch installation dimensions

### 5-door Hatchback/4-door Saloon

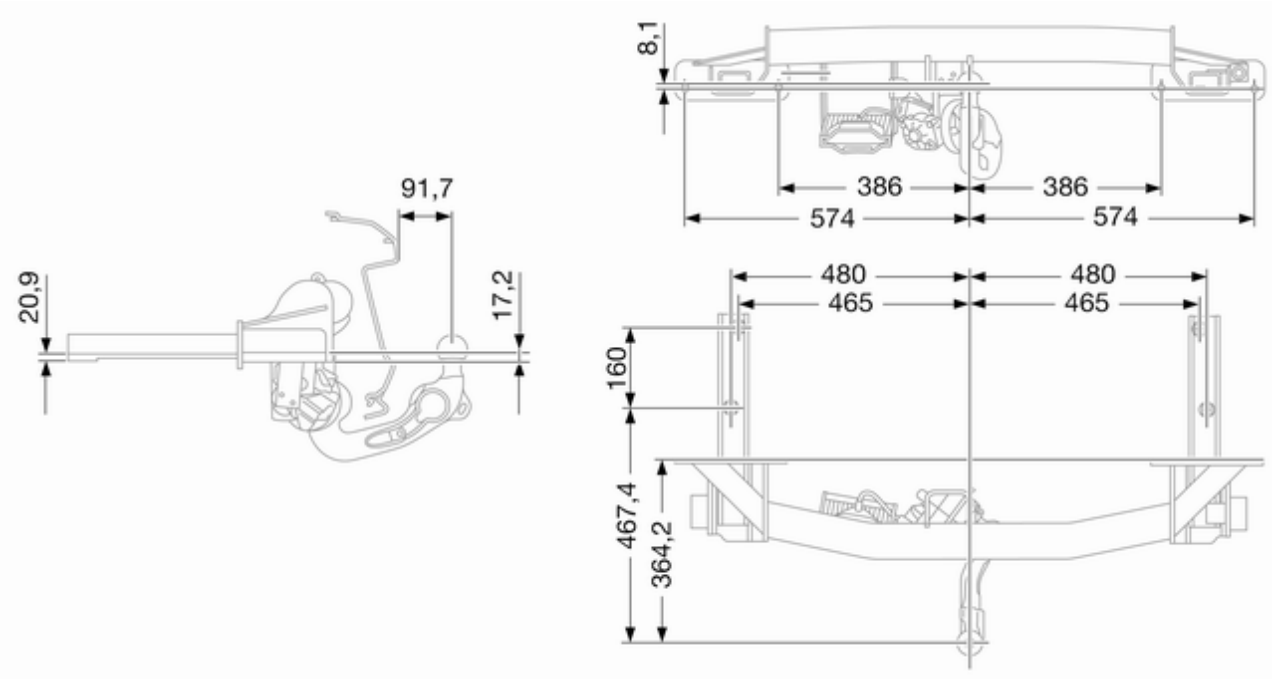

## Sports Tourer

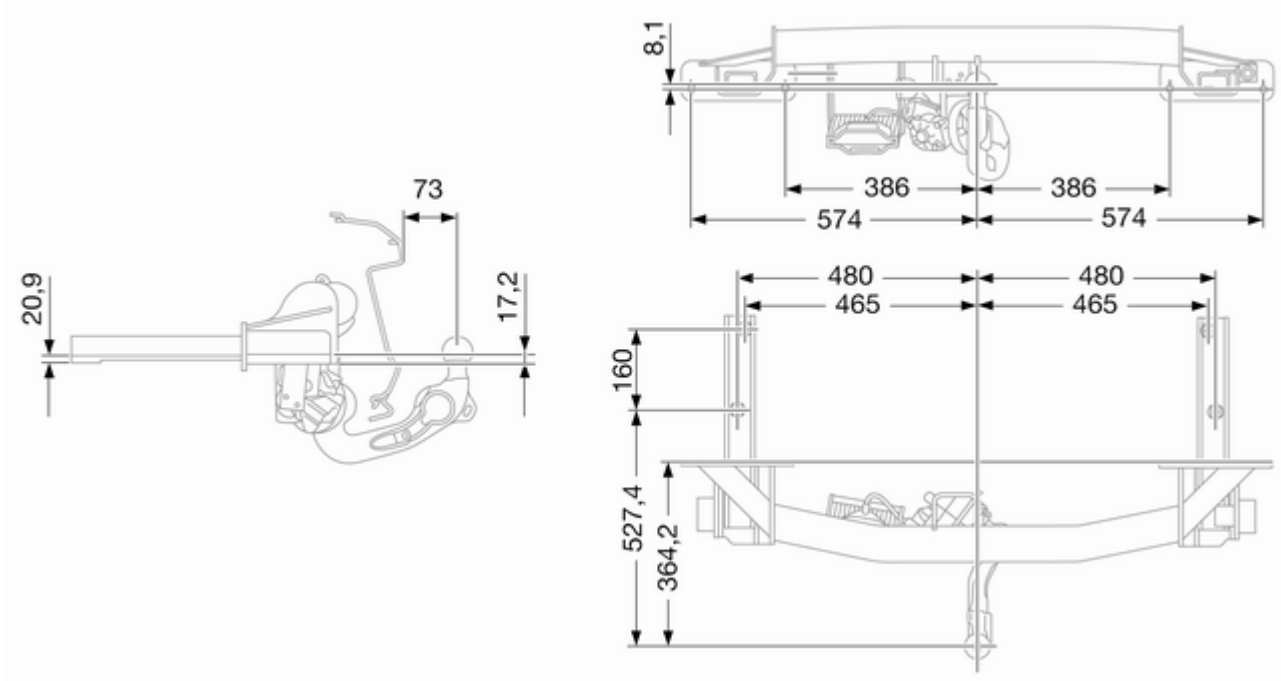

# Customer information

Vehicle data recording and privacy ..... 312

# Vehicle data recording and privacy

## Event data recorders

### Data storage modules in the vehicle

A large number of electronic components of your vehicle contain data storage modules temporarily or permanently storing technical data about the condition of the vehicle, events and errors. In general, this technical information documents the condition of parts, modules, systems or the environment:

- Operating conditions of system components (e.g. filling levels)
- Status messages of the vehicle and its single components (e.g. number of wheel revolutions / rotational speed, deceleration, lateral acceleration)
- Dysfunctions and defects in important system components
- Vehicle reactions in particular driving situations (e.g. inflation of an airbag, activation of the stability regulation system)
- Environmental conditions (e.g. temperature)

These data are exclusively technical and help identifying and correcting errors as well as optimizing vehicle functions.

Motion profiles indicating travelled routes cannot be created with these data.

If services are used (e.g. repair works, service processes, warranty cases, quality assurance), employees of the service network (manufacturer included) are able to read out this technical information from the event and error data storage modules applying special diagnostic devices. If required, you will receive further information at these workshops. After an error has been corrected, the data are deleted from the error storage module or they are constantly overwritten.

When using the vehicle, situations may occur in which these technical data related to other information (accident report, damages on the vehicle, witness statements etc.) may be associated with a specific person - possibly, with the assistance of an expert.

Additional functions contractually agreed upon with the client (e.g. vehicle location in emergency cases) allow the transmission of particular vehicle data from the vehicle.

## Radio Frequency Identification (RFID)

RFID technology is used in some vehicles for functions such as tyre pressure monitoring and ignition system security. It is also used in connection with conveniences such as radio remote controls for door locking/unlocking and starting, and in-vehicle transmitters for garage door openers. RFID technology in Opel vehicles does not use or record personal information or link with any other Opel system containing personal information.

# Index


A

Accessories and vehicle modifications ..... 191
Active Emergency Braking..... 169
Active head restraints..... 43
Adaptive cruise control..... 98, 158
Adaptive forward lighting ..... 97, 121
Adjustable air vents ..... 136
Airbag and belt tensioners ..... 92
Airbag deactivation ..... 56, 93
Airbag system ..... 53
Air conditioning regular operation ..... 137
Air conditioning system ..... 130
Air intake ..... 137
Air quality sensor..... 131
Air vents..... 136
All-wheel drive ..... 150
Antilock brake system ..... 150
Antilock brake system (ABS) ..... 94
Anti-theft alarm system ..... 31
Anti-theft locking system ..... 31
Appearance care..... 233
Armrest..... 49, 50
Armrest storage ..... 64
Ashtrays ..... 86
Automatic anti-dazzle ..... 36
Automatic light control ..... 119
Automatic locking ..... 25
Automatic transmission ..... 145
Auxiliary heater..... 136

B

Battery ..... 196
Battery discharge protection ..... 127
Battery voltage ..... 109
Belts..... 50
Bonnet ..... 193
Brake and clutch fluid..... 237
Brake and clutch system ..... 93
Brake assist ..... 152
Brake fluid ..... 196
Brakes ..... 150, 196
Breakdown..... 230
Bulb replacement ..... 199

C

Capacities ..... 266
Cargo management system ..... 70
Car Pass ..... 21
Catalytic converter ..... 144
Central locking system ..... 23
Centre console lighting ..... 126
Changing tyre and wheel size ... 219
Charging system ..... 93
Child locks ..... 26
Child restraint installation locations ..... 59
Child restraints..... 57

Child restraint systems ..... 57
Cigarette lighter ..... 86
Climate control ..... 17
Climate control systems..... 129
Clock..... 84
Control indicators..... 90
Control of the vehicle ..... 138
Controls..... 79
Convex shape ..... 33
Coolant and antifreeze..... 237
Cruise control ..... 98, 157
Cupholders ..... 63
Curtain airbag system ..... 55
Curve lighting..... 121

D

Danger, Warnings and Cautions ... 4
Diesel fuel system bleeding ..... 198
Diesel particle filter..... 96, 143
Door open ..... 98
Doors..... 26
Driver assistance systems..... 157
Driver Information Centre..... 98
Driving characteristics and towing tips ..... 187
Driving hints..... 138

E

Electric adjustment ..... 33
Electrical parking brake..... 94
Electrical parking brake fault..... 94
Electrical system..... 209
Electronic climate control system ..... 131
Electronic driving programmes .. 147
Electronic Stability Control..... 154
Electronic Stability Control and Traction Control system..... 95
Electronic Stability Control off..... 95
End-of-life vehicle recovery ..... 192
Engine compartment fuse box ... 210
Engine coolant ..... 194
Engine coolant temperature gauge ..... 88
Engine data ..... 244
Engine exhaust ..... 143
Engine oil ..... 193, 237, 241
Engine oil pressure ..... 96
Entry lighting ..... 126
Event data recorders..... 312
Exit lighting ..... 127
Exterior care ..... 233
Exterior light ..... 97
Exterior lighting ..... 14, 118
Exterior mirrors..... 33

F

Fault ..... 147
First aid..... 75
First aid kit ..... 75
Fixed air vents ..... 136
Fog light ..... 97
Fog lights ..... 203
Folding ..... 34
Following distance indication..... 169
Forward collision alert..... 165
Front airbag system ..... 54
Front fog lights ..... 124
Front seats..... 44
Front storage..... 64
Front turn signal light..... 199
Fuel..... 180
Fuel consumption - $CO_2$-Emissions ..... 186
Fuel for diesel engines ..... 180
Fuel for liquid gas operation..... 181
Fuel for petrol engines ..... 180
Fuel gauge ..... 88
Fuel selector ..... 88
Fuses ..... 209

G

Gauges..... 87
General information ..... 187
Glovebox ..... 63
Graphic-Info-Display, Colour-Info-Display ..... 103

## H
Halogen headlights ..... 199
Hand brake..... 150, 151
Hazard warning flashers ..... 123
Headlight flash ..... 119
Headlight range adjustment ..... 120
Headlights..... 118
Headlights when driving abroad 120
Head restraint adjustment ..... 8
Head restraints ..... 42
Heated ..... 35
Heated rear window ..... 38
Heated steering wheel ..... 80
Heating ..... 49
Heating and ventilation system . 129
High beam ..... 97, 119
High beam assist..... 97
Hill start assist ..... 153
Horn ..... 15, 80

## I
Identification plate ..... 239
Ignition switch positions ..... 139
Immobiliser ..... 33, 97
Indicators..... 87
Information displays..... 98
Instrument panel fuse box ..... 212
Instrument panel illumination ..... 208
Instrument panel illumination control ..... 125
Instrument panel overview ..... 10
Interactive driving system..... 154
Interior care ..... 234
Interior lighting..... 125
Interior lights ..... 125, 208
Interior mirrors..... 35
Interruption of power supply ..... 147
Introduction ..... 3
ISOFIX child restraint systems .... 62

## J
Jump starting ..... 228

## K
Key, memorised settings..... 22
Keys ..... 21
Keys, locks..... 21

## L
Lane departure warning..... 95, 179
Lashing eyes ..... 70
Lighting features..... 126
Light switch ..... 118
Load compartment ..... 26, 65
Load compartment cover ..... 67
Load compartment fuse box ..... 214
Loading information ..... 77
Low fuel ..... 97
Low washer fluid ..... 97

## M
Malfunction indicator light ..... 93
Manual anti-dazzle ..... 35
Manual mode ..... 146
Manual transmission ..... 149
Manual windows ..... 36
Memorised settings..... 22
Mirror adjustment ..... 9
Misted light covers ..... 125

## N
New vehicle running-in ..... 138
Number plate light ..... 207

## O
Object detection systems..... 171
Odometer ..... 87
Oil, engine..... 237, 241
Outside temperature ..... 83
Overrun cut-off ..... 140

## P
Parking ..... 19, 142
Parking assist ..... 35, 171
Parking brake ..... 151
Parking lights ..... 124
Performance ..... 247

Performing work ..... 192
Pollen filter ..... 137
Power outlets ..... 85
Power seat adjustment..... 47
Power windows ..... 36
Preheating ..... 96
Puncture..... 223

Q
Quickheat..... 136

R
Radio Frequency Identification (RFID)..... 313
Radio remote control ..... 21
Reading lights ..... 126
Rear floor storage cover ..... 68
Rear fog light ..... 97
Rear fog lights ..... 124
Rear seats..... 50
Rear window wiper/washer ..... 83
Recommended fluids and lubricants ..... 237, 241
Refuelling ..... 183
Retained power off..... 139
Reversing lights ..... 125
Ride control systems..... 153
Roller blinds ..... 39
Roof..... 39
Roof rack ..... 76

S
Safety belts..... 50
Safety net ..... 72
Seat adjustment ..... 6, 44
Seat belt ..... 8
Seat belt reminder ..... 92
Seat belts ..... 50
Seat position ..... 44
Selector lever ..... 145
Service ..... 137, 236
Service display ..... 89
Service information ..... 236
Service vehicle soon ..... 93
Side airbag system ..... 55
Sidelights..... 118
Side turn signal lights ..... 207
Smartphone controller..... 105
Spare wheel ..... 226
Speedometer ..... 87
Starting and operating..... 138
Starting off ..... 18
Starting the engine ..... 139
Steering wheel adjustment ..... 9, 79
Steering wheel controls ..... 79
Stop-start system..... 140
Storage..... 63
Storage compartments..... 63
Sunglasses storage ..... 64
Sunroof ..... 39
Sunvisor lights ..... 126
Sun visors ..... 38
Symbols ..... 4

T
Tachometer ..... 87
Tail lights ..... 203
Three-point seat belt ..... 51
Tools ..... 215
Top-tether fastening eyes ..... 62
Towing..... 187, 230
Towing another vehicle ..... 232
Towing equipment ..... 188
Towing hitch installation dimensions ..... 310
Towing the vehicle ..... 230
Traction Control system ..... 153
Traction Control system off..... 95
Traffic sign assistant..... 176
Trailer coupling..... 187
Trailer stability assist ..... 190
Trailer towing ..... 188
Transmission ..... 18
Transmission display ..... 145
Tread depth ..... 219
Trip computer ..... 110
Trip odometer ..... 87
Turn and lane-change signals ... 123
Turn signal ..... 92
Tyre chains ..... 220

Tyre designations ..... 216
Tyre pressure ..... 216
Tyre pressure monitoring system..... 96, 217
Tyre pressures ..... 267
Tyre repair kit ..... 220
Tyres ..... 216

U
Ultrasonic parking assist ..... 95, 171
Upholstery..... 234
Upshift..... 94
Using this manual ..... 3

V
Variable effort steering..... 95
Vehicle checks..... 192
Vehicle data..... 241
Vehicle data recording and privacy..... 312
Vehicle detected ahead..... 98
Vehicle dimensions ..... 264
Vehicle Identification Number .... 239
Vehicle jack..... 215
Vehicle messages ..... 106
Vehicle personalisation ..... 112
Vehicle security..... 31
Vehicle specific data ..... 3
Vehicle storage..... 191
Vehicle tools..... 215
Vehicle unlocking ..... 6
Vehicle weight ..... 250
Ventilating..... 49
Ventilation..... 129

W
Warning chimes ..... 109
Warning lights..... 87
Warning triangle ..... 75
Washer and wiper systems ..... 16
Washer fluid ..... 196
Wheel changing ..... 223
Wheel covers ..... 219
Wheels and tyres ..... 216
Windows..... 36
Windscreen..... 36
Windscreen wiper/washer ..... 81
Winter tyres ..... 216
Wiper blade replacement ..... 198

X
Xenon headlights ..... 202

Copyright by ADAM OPEL AG, Rüsselsheim, Germany.

The information contained in this publication is effective as of the date indicated below. Adam Opel AG reserves the right to make changes to the technical specifications, features and design of the vehicles relative to the information in this publication as well as changes to the publication itself.

Edition: August 2012, ADAM OPEL AG, Rüsselsheim.

Printed on chlorine-free bleached paper.

KTA-2675/9-en

August 2012