For your safety, read carefully and keep in this vehicle.

2015 Infiniti QX70 | Owner's Manual

INFINITI®

Foreword

Your INFINITI represents a new way of thinking about vehicle design. It integrates advanced engineering and superior craftsmanship with a simple, refined aesthetic sensitivity associated with traditional Japanese culture.

The result is a different notion of luxury and beauty. The car itself is important, but so is the sense of harmony that the vehicle evokes in its driver, and the sense of satisfaction you feel with the INFINITI — from the way it looks and drives to the high level of retailer service.

To ensure that you enjoy your INFINITI to the fullest, we encourage you to read this Owner's Manual immediately. It explains all of the features, controls and performance characteristics of your INFINITI; it also provides important instructions and safety information.

A separate Warranty Information Booklet is included in your Owner's literature portfolio. The INFINITI Service and Maintenance Guide explains details about maintaining and servicing your vehicle. Always carry it with you when you take your vehicle to an INFINITI retailer. The Warranty Information Booklet contents provide complete information about all warranties covering this vehicle, the requirements to keep the warranties in effect as well as the INFINITI Roadside Assistance program.

Additionally, a separate Customer Care and Lemon Law Information Booklet will explain how to resolve any concerns you may have with your vehicle, as well as clarify your rights under your state's lemon law.

In addition to factory installed options, your vehicle may also be equipped with additional accessories installed by INFINITI or by your INFINITI retailer prior to delivery. It is important that you familiarize yourself with all disclosures, warnings, cautions and instructions concerning proper use of such accessories prior to operating the vehicle and/or accessory. See an INFINITI retailer for details concerning the particular accessories with which your vehicle is equipped.

READ FIRST — THEN DRIVE SAFELY

Before driving your vehicle, read your Owner's Manual carefully. This will ensure familiarity with controls and maintenance requirements, assisting you in the safe operation of your vehicle.

WARNING

IMPORTANT SAFETY INFORMATION REMINDERS FOR SAFETY!

Follow these important driving rules to help ensure a safe and comfortable trip for you and your passengers!

- **NEVER drive under the influence of alcohol or drugs.**
- **ALWAYS observe posted speed limits and never drive too fast for conditions.**
- **ALWAYS give your full attention to driving and avoid using vehicle features or taking other actions that could distract you.**
- **ALWAYS use your seat belts and appropriate child restraint systems. Pre-teen children should be seated in the rear seat.**

- **ALWAYS provide information about the proper use of vehicle safety features to all occupants of the vehicle.**
- **ALWAYS review this Owner's Manual for important safety information.**

ON-PAVEMENT AND OFF-ROAD DRIVING

This vehicle will handle and maneuver differently from an ordinary passenger car because it has a higher center of gravity. As with other vehicles with features of this type, failure to operate this vehicle correctly may result in loss of control or an accident. Be sure to read "On-pavement and off-road driving precautions", "Avoiding collision and rollover" and "Driving safety precautions" in the "5. Starting and driving" section of this manual.

MODIFICATION OF YOUR VEHICLE

This vehicle should not be modified. Modification could affect its performance, safety or durability, and may even violate governmental regulations. In addition, damage or performance problems resulting from modification will not be covered under the INFINITI warranties.

WHEN READING THE MANUAL

This manual includes information for all features and equipment available on this model. Features and equipment in your vehicle may vary depending on model, trim level, options selected, order, date of production, region or availability. Therefore, you may find information about features or equipment that are not included or installed on your vehicle.

All information, specifications and illustrations in this manual are those in effect at the time of printing. INFINITI reserves the right to change specifications, performance, design or component suppliers without notice and without obligation. From time to time, INFINITI may update or revise this manual to provide Owners with the most accurate information currently available. Please carefully read and retain with this manual all revision updates sent to you by INFINITI to ensure you have access to accurate and up-to-date information regarding your vehicle. Current versions of vehicle Owner's Manuals and any updates can also be found in the Owner section of the INFINITI website at https://owners.infinitiusa.com/owners/navigation/manualsandGuides. If you have questions concerning any information in your Owner's Manual, contact INFINITI Consumer Affairs. See the INFINITI CUSTOMER CARE PROGRAM page in this Owner's Manual for contact information.

IMPORTANT INFORMATION ABOUT THIS MANUAL

You will see various symbols in this manual. They are used in the following ways:

⚠ WARNING

This is used to indicate the presence of a hazard that could cause death or serious personal injury. To avoid or reduce the risk, the procedures must be followed precisely.

CAUTION

This is used to indicate the presence of a hazard that could cause minor or moderate personal injury or damage to your vehicle. To avoid or reduce the risk, the procedures must be followed carefully.

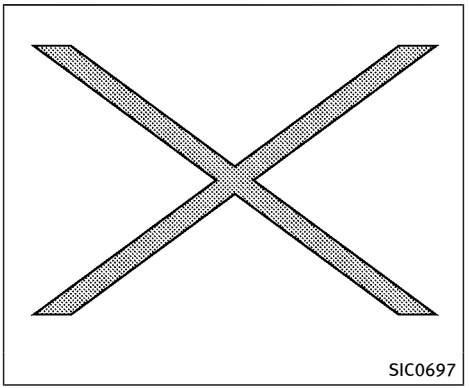

If you see the symbol above, it means **"Do not do this"** or **"Do not let this happen"**.

If you see a symbol similar to those above in an illustration, it means the arrow points to the front of the vehicle.

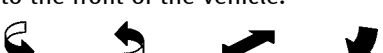

Arrows in an illustration that are similar to those above indicate movement or action.

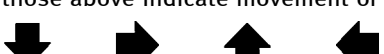

Arrows in an illustration that are similar to those above call attention to an item in the illustration.

CALIFORNIA PROPOSITION 65 WARNING

WARNING

Engine Exhaust, some of its constituents, and certain vehicle components contain or emit chemicals known to the State of California to cause cancer and birth defects or other reproductive harm. In addition, certain fluids contained in vehicles and certain products of component wear contain or emit chemicals known to the State of California to cause cancer and birth defects or other reproductive harm.

CALIFORNIA PERCHLORATE ADVISORY

Some vehicle parts, such as lithium batteries, may contain perchlorate material. The following advisory is provided: "Perchlorate Material - special handling may apply, See www.dtsc.ca.gov/hazardouswaste/perchlorate."

Bluetooth® is a trademark owned by Bluetooth SIG, Inc. and licensed to Visteon Corporation and Clarion Co., Ltd.

SiriusXM Satellite Radio requires subscription, sold separately. Not available in Alaska, Hawaii or Guam. For more information, visit www.siriusxm.com.

INFINITI®

© 2014 NISSAN MOTOR CO., LTD.

All rights reserved. No part of this Owner's Manual may be reproduced or stored in a retrieval system, or transmitted in any form, or by any means, electronic, mechanical, photocopying, recording or otherwise, without the prior written permission of Nissan Motor Co., Ltd.

INFINITI CUSTOMER CARE PROGRAM

INFINITI CARES ...

Both INFINITI and your INFINITI retailer are dedicated to serving all your automotive needs. Your satisfaction with your vehicle and your INFINITI retailer are our primary concerns. Your INFINITI retailer is always available to assist you with all your automobile sales and service needs.

However, if there is something that your INFINITI retailer cannot assist you with or you would like to provide INFINITI directly with comments or questions, please contact our (INFINITI's) Consumer Affairs Department using our toll-free number:

For U.S. customers
1-800-662-6200
For Canadian customers
1-800-361-4792

The Consumer Affairs Department will ask for the following information:

- Your name, address, and telephone number
- Vehicle identification number (on dash panel)
- Date of purchase
- Current odometer reading
- Your INFINITI retailer's name
- Your comments or questions

OR

You can write to INFINITI with the information on the left at:

For U.S. customers
INFINITI Division
Nissan North America, Inc.
Consumer Affairs Department
P.O. Box 685003
Franklin, TN 37068-5003
or via e-mail at:
nnaconsumeraffairs@nissan-usa.com

For Canadian customers
INFINITI Division
Nissan Canada Inc.
5290 Orbitor Drive
Mississauga, Ontario L4W 4Z5
or via e-mail at:
information.centre@nissancanada.com

If you perfer, visit us at:

www.infinitiUSA.com (for U.S. customers) or

www.infiniti.ca (for Canadian customers)

We appreciate your interest in INFINITI and thank you for buying a quality INFINITI vehicle.

Table of Contents

Illustrated table of contents	0
Safety — Seats, seat belts and supplemental restraint system	1
Instruments and controls	2
Pre-driving checks and adjustments	3
Monitor, climate, audio, phone and voice recognition systems	4
Starting and driving	5
In case of emergency	6
Appearance and care	7
Maintenance and do-it-yourself	8
Technical and consumer information	9
Index	10

0 Illustrated table of contents

Seats, seat belts and supplemental restraint system (SRS) 0-2
Exterior front 0-3
Exterior rear 0-4
Passenger compartment 0-5
Cockpit 0-6
Instrument panel 0-8
Meters and gauges 0-9
Engine compartment 0-10
VQ37VHR engine 0-10
Warning and indicator lights 0-11

SEATS, SEAT BELTS AND SUPPLEMENTAL RESTRAINT SYSTEM (SRS)

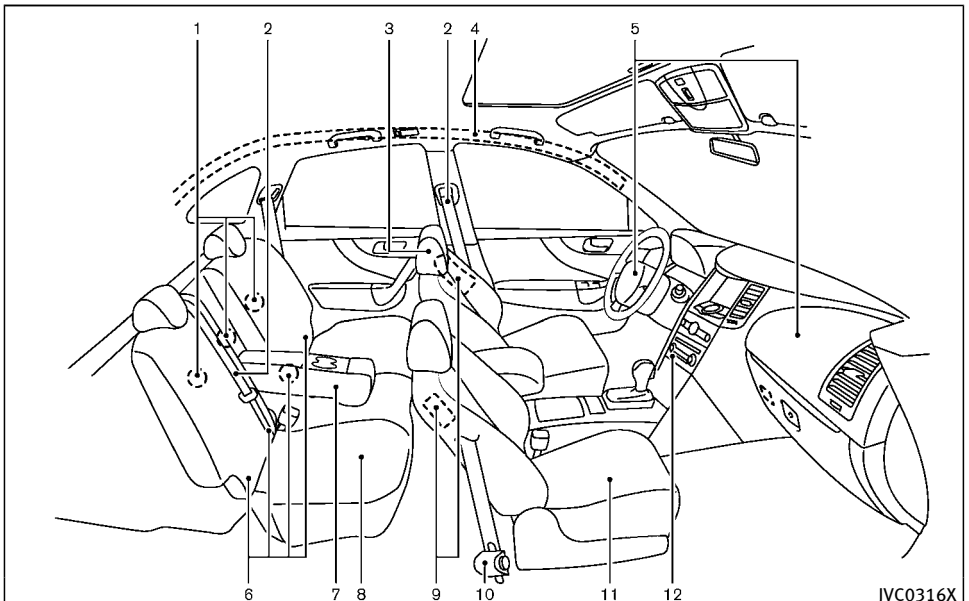

1. Child restraint anchor points (for top tether strap child restraint) (Page 1-26, P.1-38)
2. Seat belts (P.1-12)
3. Front-seat Active Head Restraint (P.1-8)
4. Roof-mounted curtain side-impact and rollover supplemental air bags (P.1-42)
5. Supplemental front-impact air bags (P.1-42)
6. LATCH (Lower Anchors and Tethers for CHildren) system (P.1-24)
7. Rear armrest (P.1-7)
8. Rear seats (P.1-6)
   — Child restraints (P.1-22)
9. Front seat-mounted side-impact supplemental air bags (P.1-42)
10. Seat belt pretensioner (P.1-54)
11. Front seats (P.1-4)
    — Occupant classification sensors (weight sensors) (P.1-47)
12. Front passenger air bag status light (P.1-49)

EXTERIOR FRONT

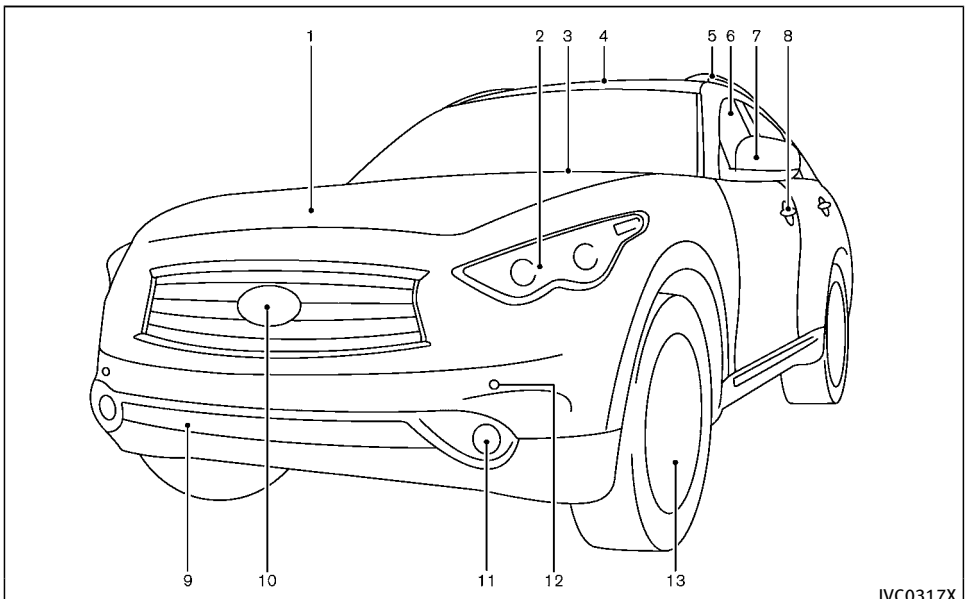

1. Hood (P.3-18)
2. Headlight and turn signal (P.2-38)
   — Bulb replacement (P.8-26)
   — Adaptive Front lighting System (AFS) (if so equipped) (P.2-42)
3. Windshield wiper and washer (P.2-34)
   — Maintenance (P.8-19)
4. Moonroof (P.2-61)
5. Roof rack (if so equipped) (P.2-58)
6. Power windows (P.2-59)
7. Outside mirrors (P.3-30)
   — Side view camera (if so equipped) (P.4-31)
   — Welcome light (P.2-63)
8. Doors
   — Keys (P.3-2)
   — Door locks (P.3-4)
   — Intelligent Key system (P.3-6)
   — Remote keyless entry system (P.3-14)
9. Recovery hook (P.6-15)
10. Front view camera (if so equipped) (P.4-31)
11. Fog light (P.2-44)
12. Sonar sensor (if so equipped)
    — Around View Monitor (P.4-31)
13. Tires
    — Wheel and tires (P.8-29, P.9-9)
    — Flat tire (P.6-3)
    — Tire pressure monitoring system (TPMS) (P.2-16, P.5-4)

EXTERIOR REAR

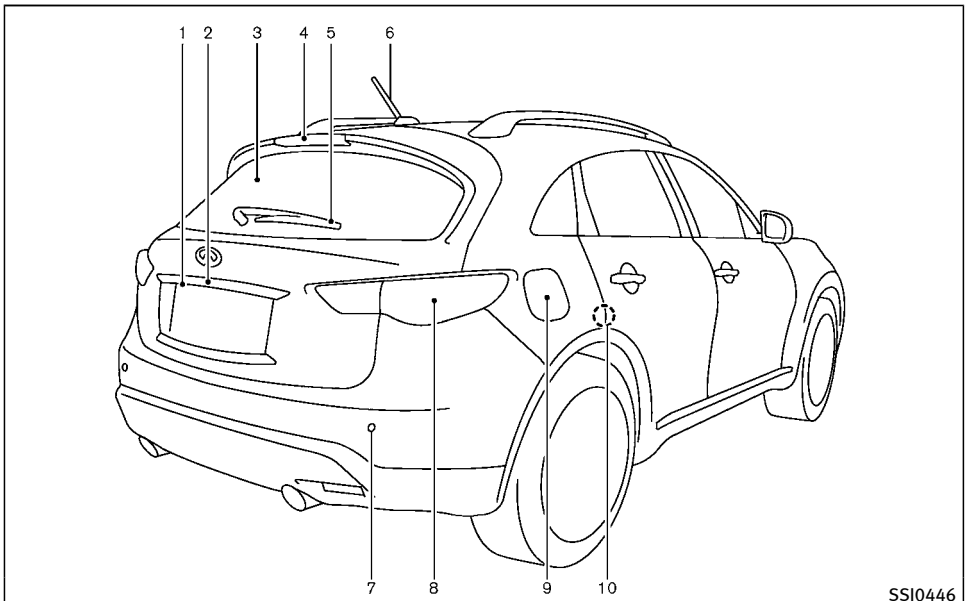

1. Rear view camera (P.4-24, P.4-31)
2. Lift gate (P.3-18)
   — Intelligent Key system (P.3-6)
   — Remote keyless entry system (P.3-14)
3. Rear window defroster (P.2-38)
4. High-mounted stop light (Bulb replacement) (P.8-26)
5. Rear window wiper and washer (P.2-37)
   — Maintenance (P.8-21)
6. Antenna (P.4-88)
7. Sonar sensor (if so equipped)
   — Around View Monitor (P.4-31)
8. Rear combination light (Bulb replacement) (P.8-26)
9. Fuel-filler door (P.3-24)
   — Fuel recommendation (P.9-4)
10. Child safety rear door locks (P.3-6)

PASSENGER COMPARTMENT

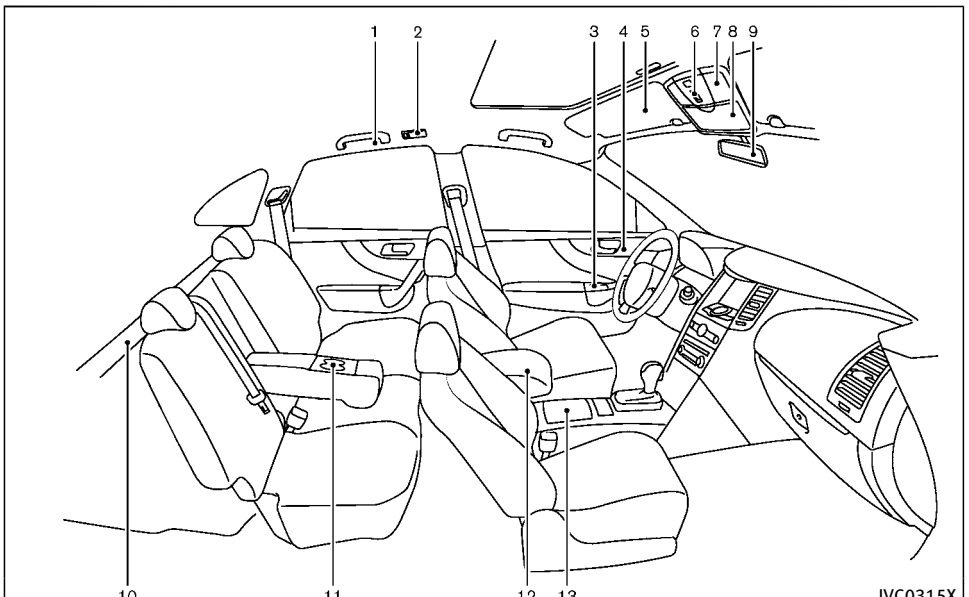

1. Coat hooks (P.2-54)
2. Rear personal light (P.2-64)
3. Power window controls (P.2-59)
4. Automatic drive positioner switch (if so equipped) (P.3-32)
5. Sun visors (P.3-28)
6. Moonroof switch (P.2-61)
7. Map light (P.2-64)
8. Sunglasses holder (P.2-52)
9. Inside rearview mirror (P.3-29)
   — HomeLink® (P.2-66)
   — Compass (if so equipped) (P.2-10)
10. Cargo cover (if so equipped) (P.2-56)
11. Rear cup holders (P.2-51)
12. Console box
    — Power outlet (P.2-50)
    — USB memory operation (P.4-74) or iPod® player operation (P.4-83)
13. Front cup holders (P.2-51)

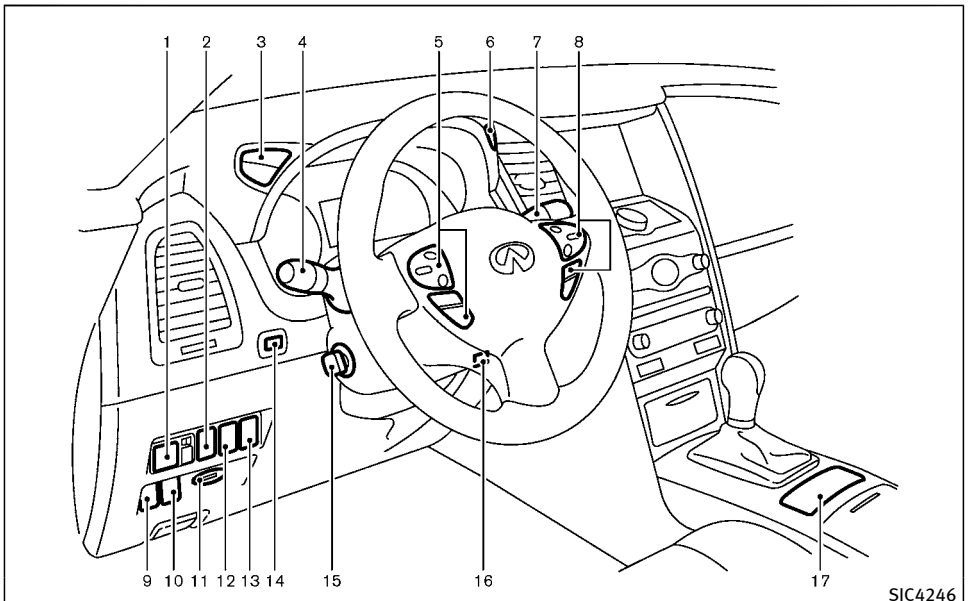

1. Outside mirror remote control switch (P.3-30)
2. Intelligent Brake Assist (IBA) off switch (if so equipped) (P.2-48)
3. Instrument brightness control switch (P.2-43)
4. Headlight, fog light and turn signal switch (P.2-38)
5. Steering-wheel-mounted controls (left side)
   — For audio system (P.4-52)
   — For Bluetooth® Hands-Free Phone System (with navigation system) (P.4-90)
   — For Bluetooth® Hands-Free Phone System (without navigation system) (P.4-100)
   — For INFINITI Voice Recognition System (with navigation system) (P.4-115)
6. Trip computer switch (P.2-29)
7. Windshield wiper and washer switch (P.2-34)
8. Steering-wheel-mounted controls (right side)
   — Cruise control switches (if so equipped) (P.5-30)
   — Intelligent Cruise Control (ICC) switches (if so equipped) (P.5-32)
   — Dynamic Driver Assistance switch (if so equipped) (P.5-21, P.5-55)
9. Warning systems switch (if so equipped)
   — Forward Collision Warning (FCW) (P.2-47, P.5-67)
   — Lane Departure Warning (LDW) (P.2-47, P.5-21)
9. Headlight aiming control (if so equipped) (P.2-41)

10. Vehicle Dynamic Control (VDC) OFF switch (P.5-84)
11. Intelligent Key port (P.5-13)
12. Power lift gate switch (P.3-18)
13. Power lift gate main switch (P.3-18)
14. TRIP/RESET switch for twin trip odometer (P.2-7)
15. Electric tilting/telescopic steering wheel lever (if so equipped) (P.3-27)
16. Manual tilting/telescopic steering wheel lever (if so equipped) (P.3-27)
17. Center-console-mounted controls
    — Climate controlled seat switches (P.2-46) or Seat heater switches (P.2-45)
    — SNOW mode switch (P.2-48)

INSTRUMENT PANEL

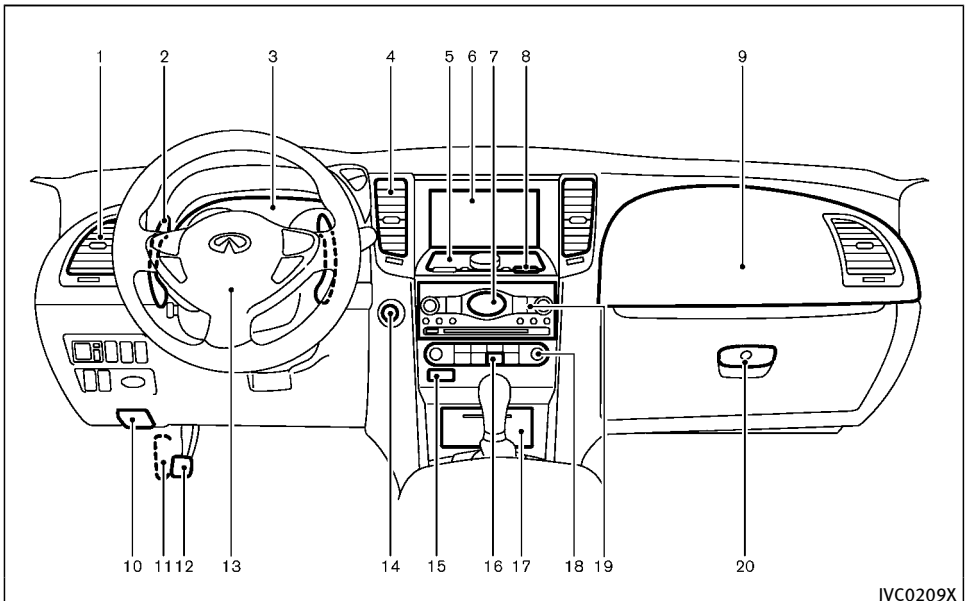

1. Side ventilator (P.4-47)
2. Paddle shifter (if so equipped) (P.5-17)
3. Meters and gauges (P.2-6)
4. Center ventilator (P.4-47)
5. Center multi-function control panel
   — Navigation system* (if so equipped)
   — Vehicle information and setting buttons (P.4-9)
   — Around View Monitor (if so equipped) (P.4-31)
6. Center display (P.4-3)
7. Clock (P.2-49)
8. Hazard warning flasher switch (P.6-2)
9. Front passenger supplemental air bag (P.1-42)
10. Hood release handle (P.3-18)
11. Fuse box cover (P.8-22)
12. Parking brake (P.5-20)
13. Steering wheel
    — Horn (P.2-44)
    — Driver supplement air bag (P.1-42)
14. Push-button ignition switch (P.5-11)
15. Front passenger air bag status light (P.1-47)
16. Rear window defroster switch (P.2-38)
17. Power outlet (P.2-50)
18. Automatic climate control system (P.4-48)
19. Audio system (P.4-52)
20. Glove box lid release handle (P.2-53)

*: Refer to the separate Navigation System Owner's Manual.

METERS AND GAUGES

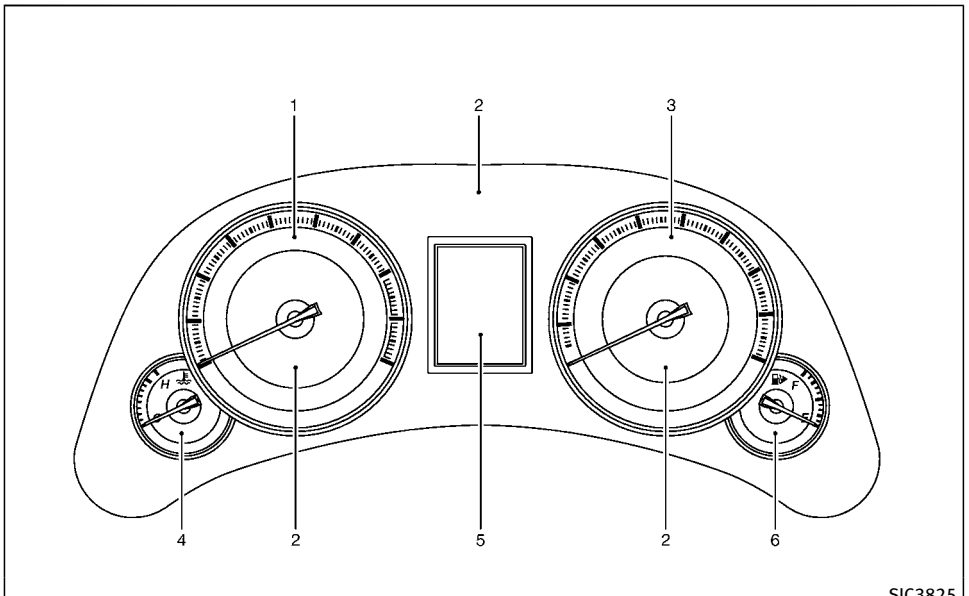

1. Tachometer (P.2-8)
2. Warning/Indicator lights (P.2-13)
3. Speedometer (P.2-7)
4. Engine coolant temperature gauge (P.2-8)
5. Vehicle information display/Odometer/twin trip odometer (P.2-22)
6. Fuel gauge (P.2-9)

ENGINE COMPARTMENT

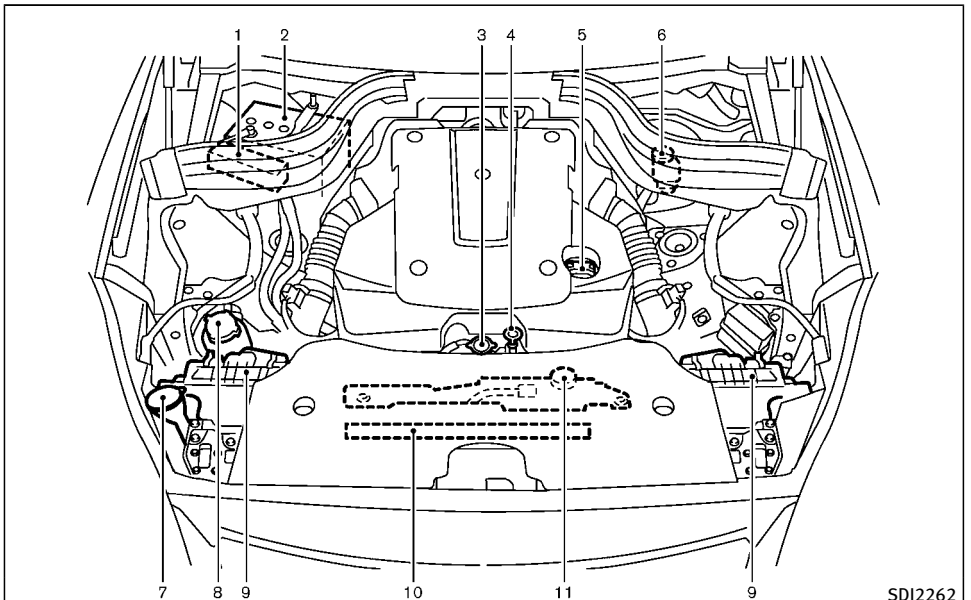

VQ37VHR ENGINE

1. Fuse/fusible link holder (P.8-22)
2. Battery (P.8-15)
3. Radiator filler cap (P.8-7)
4. Engine oil dipstick (P.8-9)
5. Engine oil filler cap (P.8-9)
6. Brake fluid reservoir (P.8-13)
7. Window washer fluid reservoir (P.8-14)
8. Power steering fluid reservoir (P.8-12)
9. Air cleaner (P.8-18)
10. Drive belts (P.8-17)
11. Coolant reservoir (P.8-7)

WARNING AND INDICATOR LIGHTS

Warning light	Name	Page
AWD	All-Wheel Drive (AWD) warning light (AWD models)*	2-13
ABS	Anti-lock Braking System (ABS) warning light	2-14
AT CHECK	Automatic Transmission check warning light	2-14
BRAKE	Brake warning light	2-14
	Charge warning light	2-15
CRUISE	Distance Control Assist (DCA) system warning light (orange)*	2-15
	Engine oil pressure warning light	2-15
CRUISE	Intelligent Cruise Control (ICC) system warning light (orange)*	2-16
KEY	Intelligent Key warning light	2-16
	Lane Departure Warning (LDW) indicator light (orange)*	2-16
	Low tire pressure warning light	2-16
	Master warning light	2-18
CRUISE	Preview Function warning light (orange)*	2-18
	Seat belt warning light	2-18

Warning light	Name	Page
	Supplemental air bag warning light	2-18
	Vehicle Dynamic Control (VDC) warning light	2-19

Indicator light	Name	Page
AFS OFF	Adaptive Front lighting System (AFS) indicator light*	2-19
P / M1	Automatic Transmission position indicator light	2-19
	Exterior light indicator	2-19
PASSENGER AIR BAG OFF	Front passenger air bag status light	2-19
	High beam indicator light	2-20
IBA OFF	Intelligent Brake Assist (IBA) off indicator light*	2-20
	Lane Departure Warning (LDW) indicator light (green)*	2-20
	Malfunction Indicator Light (MIL)	2-20
	Security indicator light	2-21
	Turn signal/hazard indicator lights	2-21
OFF	Vehicle Dynamic Control (VDC) off indicator light	2-21

*: if so equipped

MEMO

1 Safety — Seats, seat belts and supplemental restraint system

Seats 1-3
Front seats 1-4
Rear seats 1-6
Armrest 1-7
Head restraints/headrests 1-8
Adjustable head restraint/headrest components 1-9
Non-adjustable head restraint/headrest components 1-9
Remove 1-9
Install 1-10
Adjust 1-10
Front-seat Active Head Restraint 1-11
Seat belts 1-12
Precautions on seat belt usage 1-12
Pregnant women 1-15
Injured persons 1-15
Pre-crash seat belts with comfort function (front seats) (if so equipped) 1-15
Three-point type seat belt 1-15
Seat belt extenders 1-19
Seat belt maintenance 1-19
Child safety 1-20
Infants 1-20
Small children 1-21
Larger children 1-21
Child restraints 1-22
Precautions on child restraints 1-22
Lower Anchors and Tethers for CHildren (LATCH) System 1-24
Rear-facing child restraint installation using LATCH 1-26
Rear-facing child restraint installation using the seat belts 1-28
Forward-facing child restraint installation using LATCH 1-31
Forward-facing child restraint installation using the seat belts 1-34
Booster seats 1-39
Supplemental restraint system 1-42
Precautions on supplemental restraint system 1-42
INFINITI advanced air bag system (front seats) 1-47

Front seat-mounted side-impact supplemental air bag and roof-mounted curtain side-impact and rollover supplemental air bag systems..... 1-52
Seat belts with pretensioners (front seats).... 1-54
Supplemental air bag warning labels..... 1-55
Supplemental air bag warning light..... 1-55
Repair and replacement procedure 1-56

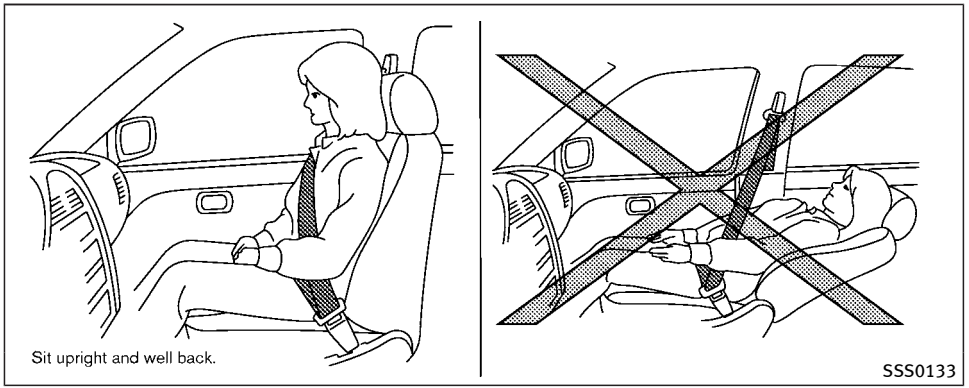

WARNING

- **Do not ride in a moving vehicle when the seatback is reclined. This can be dangerous. The shoulder belt will not be against your body. In an accident, you could be thrown into it and receive neck or other serious injuries. You could also slide under the lap belt and receive serious internal injuries.**
- **For the most effective protection when the vehicle is in motion, the seat should be upright. Always sit well back in the seat with both feet on the floor and adjust the seat belt properly. See "Precautions on seat belt usage" (P.1-12).**
- **After adjustment, gently rock in the seat to make sure it is securely locked.**
- **Do not leave children unattended inside the vehicle. They could unknowingly activate switches or controls. Unattended children could become involved in serious accidents.**
- **The seatback should not be reclined any more than needed for comfort. Seat belts are most effective when the passenger sits well back and straight up in the seat. If the seatback is reclined, the risk of sliding under the lap belt and being injured is increased.**

FRONT SEATS

Front power seat adjustment

Operating tips:

- The power seat motor has an auto-reset overload protection circuit. If the motor stops during operation, wait 30 seconds, then reactivate the switch.
- Do not operate the power seat switch for a long period of time when the engine is off. This will discharge the battery.

See “Automatic drive positioner” (P.3-32) for the seat position memory function (if so equipped).

CAUTION

When adjusting the seat positions, be sure not to contact any moving parts to avoid possible injuries and/or damages.

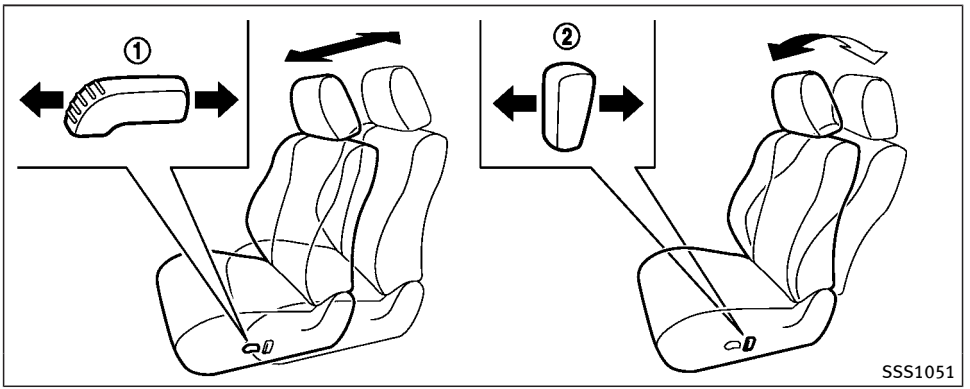

Forward and backward:

Moving the switch ① forward or backward will slide the seat forward or backward to the desired position.

Reclining:

Move the recline switch ② backward until the desired angle is obtained. To bring the seatback forward again, move the switch ② forward.

The reclining feature allows adjustment of the seatback for occupants of different sizes for added comfort and to help obtain proper seat belt fit. (See “Precautions on seat belt usage” (P.1-12).) Also, the seatback can be reclined to allow occupants to rest when the vehicle is stopped and the transmission is in the P (Park) position.

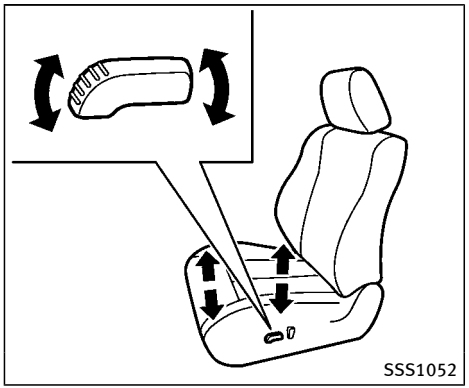

Seat lifter:

Push the front or rear end of the switch up or down to adjust the angle or height of the seat.

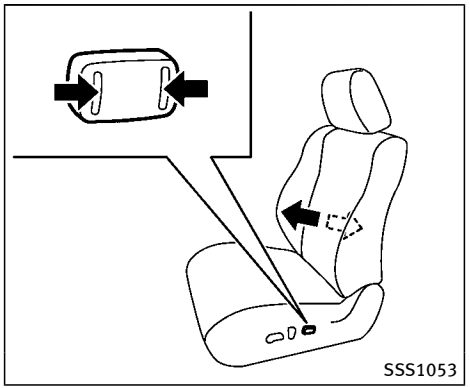

Lumbar support:

The lumbar support feature provides lower back support to the driver.

Push the front or back end of the switch to adjust the seatback lumbar area.

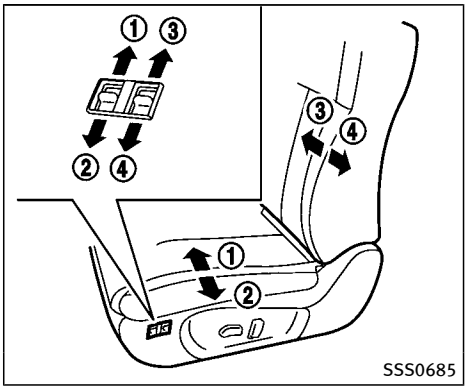

Side support (if so equipped):

The side support feature provides thigh and torso supports. Push the switch inside ① or outside ② to adjust the thigh area. Push the switch inside ③ or outside ④ to adjust the torso area.

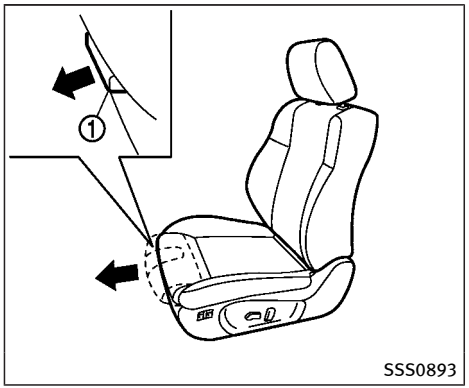

Thigh extension (if so equipped):

The front portion of the front seats can be extended forward for seating comfort. Pull up and hold the lever ① to extend the front portion to the desired position.

REAR SEATS

WARNING

- **Never allow anyone to ride in the cargo area or on the rear seat when it is in the fold-down position. Use of these areas by passengers without proper restraints could result in serious injury in an accident or sudden stop.**
- **When returning the seatbacks to the upright position, be certain they are completely secured in the latched position. If they are not completely secured, passengers may be injured in an accident or sudden stop.**
- **Properly secure all cargo to help prevent it from sliding or shifting. Do not place cargo higher than the seatbacks. In a sudden stop or collision, unsecured cargo could cause personal injury.**

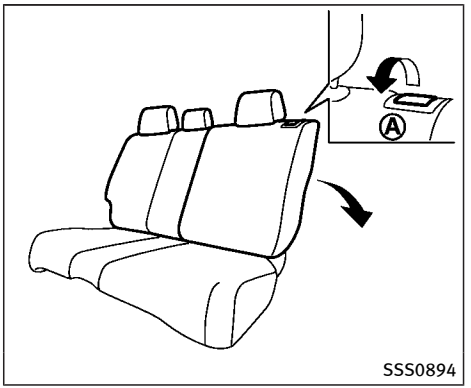

Reclining

Pull the reclining lever Ⓐ and position the seatback at the desired angle. Release the reclining lever after positioning the seat at the desired angle.

To return the seatback, pull the lever.

The reclining feature allows adjustment of the seatback for occupants of different sizes to help obtain proper seat belt fit. (See “Precautions on seat belt usage” (P.1-12).) The seatback may also be reclined to allow occupants to rest when the vehicle is parked.

WARNING

- **Do not ride in a moving vehicle when the seatback is reclined. This can be dangerous. The shoulder belt will not be against your body. In an accident, you could be thrown into it and receive neck or other serious injuries. You could also slide under the lap belt and receive serious internal injuries.**
- **For the most effective protection when the vehicle is in motion, the seat should be upright. Always sit well back in the seat with both feet on the floor and adjust the seat belt properly. See "Precautions on seat belt usage" (P.1-12).**
- **After adjustment, check to be sure the seat is securely locked.**

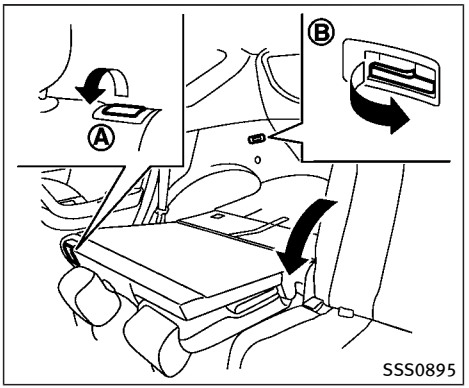

Folding

Before folding the rear seats:

Remove drink containers from the rear cup holder.

To fold down the seatbacks:

Pull the lever Ⓐ or Ⓑ and fold the seatback.

Return the rear seatback manually until it securely locks in position.

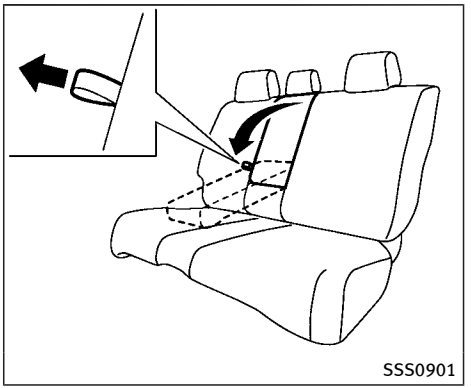

ARMREST

Rear armrest

Pull the tab and draw the armrest forward until it is horizontal.

WARNING

Head restraint/headrest supplement the other vehicle safety systems. They may provide additional protection against injury in certain rear end collisions. Adjustable head restraint/headrest must be adjusted properly, as specified in this section. Check the adjustment after someone else uses the seat. Do not attach anything to the head restraint/headrest stalks or remove the head restraint/headrest. Do not use the seat if the head restraint/headrest has been removed. If the head restraint/headrest was removed, reinstall and properly adjust the head restraint/headrest before an occupant uses the seating position. Failure to follow these instructions can reduce the effectiveness of the head restraint/headrest. This may increase the risk of serious injury or death in a collision.

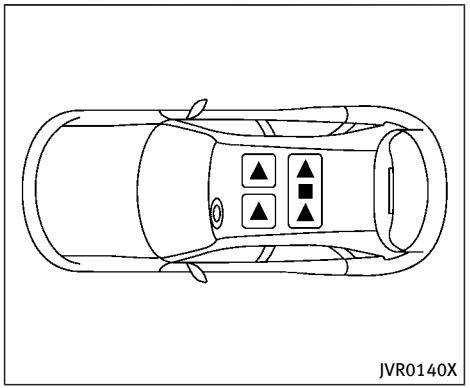

The illustration shows the seating positions equipped with head restraint/headrest.

▲ Indicates the seating position is equipped with a head restraint.

■ Indicates the seating position is equipped with a headrest.

+ Indicates the seating position is not equipped with a head restraint or headrest (if applicable).

- Your vehicle is equipped with a head restraint/headrest that may be integrated, adjustable or non-adjustable.
- Adjustable head restraints/headrests have multiple notches along the stalks to lock them in a desired adjustment position.
- The non-adjustable head restraints/headrests have a single locking notch to secure them to the seat frame.
- Proper Adjustment:
  - For the adjustable type, align the head restraint/headrest so the center of your ear is approximately level with the center of the head restraint/headrest.
  - If your ear position is still higher than the recommended alignment, place the head restraint/headrest at the highest position.
- If the head restraint/headrest has been removed, ensure that it is reinstalled and locked in place before riding in that designated seating position.

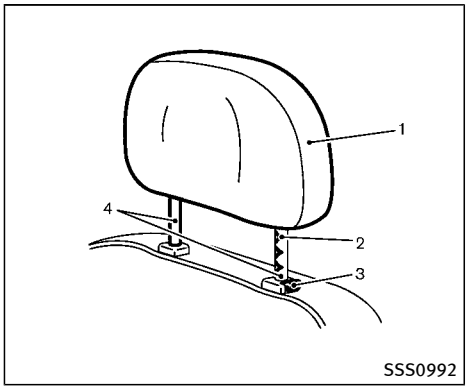

ADJUSTABLE HEAD RESTRAINT/ HEADREST COMPONENTS

1. Removable head restraint/headrest
2. Multiple notches
3. Lock knob
4. Stalks

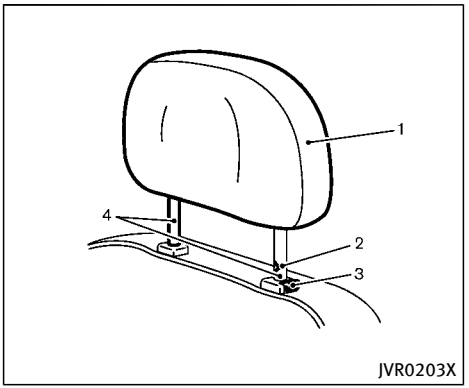

NON-ADJUSTABLE HEAD RE-STRAINT/HEADREST COMPONENTS

1. Removable head restraint/headrest
2. Single notch
3. Lock knob
4. Stalks

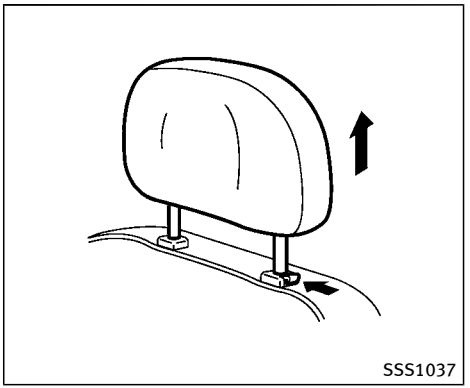

REMOVE

Use the following procedure to remove the head restraint/headrest.

1. Pull the head restraint/headrest up to the highest position.
2. Push and hold the lock knob.
3. Remove the head restraint/headrest from the seat.
4. Store the head restraint/headrest properly in a secure place so it is not loose in the vehicle.
5. Reinstall and properly adjust the head restraint/headrest before an occupant uses the seating position.

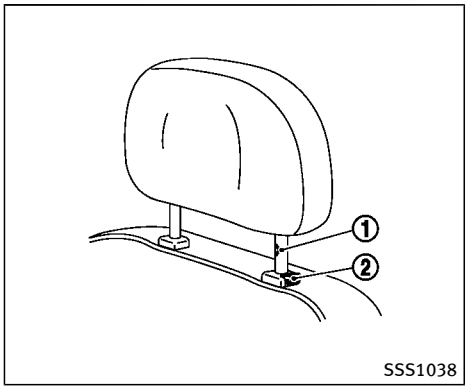

INSTALL

1. Align the head restraint/headrest stalks with the holes in the seat. Make sure that the head restraint/headrest is facing the correct direction. The stalk with the adjustment notch ① must be installed in the hole with the lock knob ②.
2. Push and hold the lock knob and push the head restraint/headrest down.
3. Properly adjust the head restraint/headrest before an occupant uses the seating position.

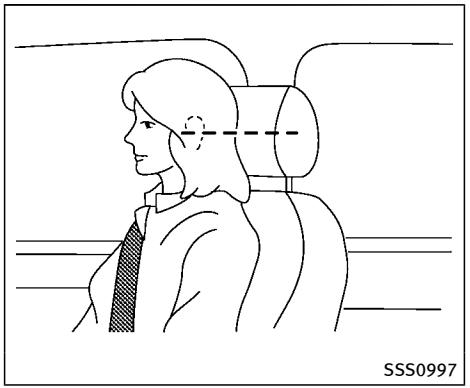

ADJUST

For adjustable head restraint/headrest

Adjust the head restraint/headrest so the center is level with the center of your ears. If your ear position is still higher than the recommended alignment, place the head restraint/headrest at the highest position.

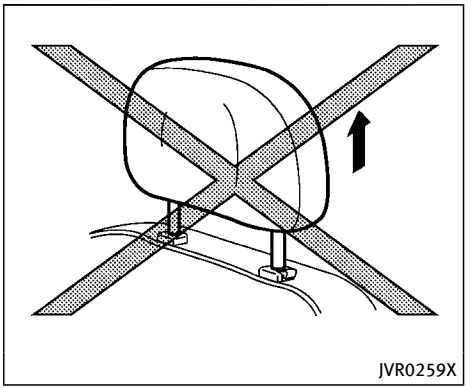

For non-adjustable head restraint/headrest

Make sure the head restraint/headrest is positioned so the lock knob is engaged in the notch before riding in that designated seating position.

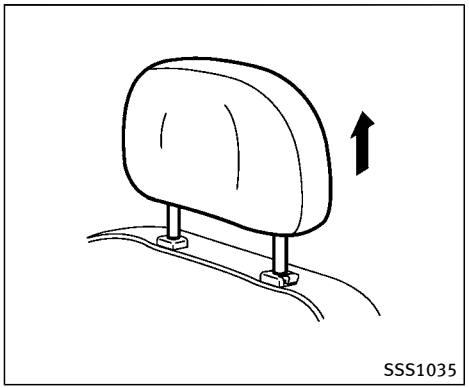

Raise

To raise the head restraint/headrest, pull it up.

Make sure the head restraint/headrest is positioned so the lock knob is engaged in the notch before riding in that designated seating position.

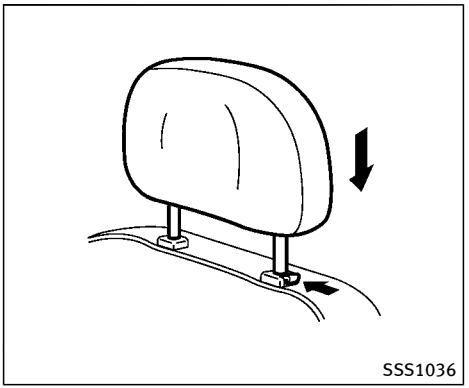

Lower

To lower, push and hold the lock knob and push the head restraint/headrest down.

Make sure the head restraint/headrest is positioned so the lock knob is engaged in the notch before riding in that designated seating position.

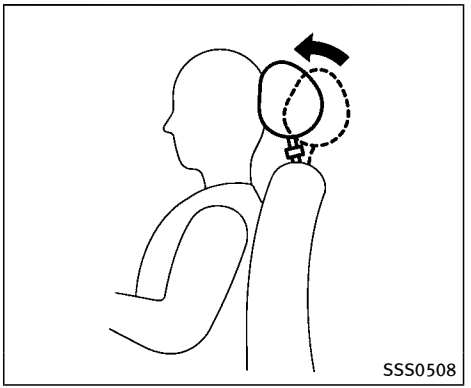

FRONT-SEAT ACTIVE HEAD RESTRAINT

The Active Head Restraint moves forward utilizing the force that the seatback receives from the occupant in a rear-end collision. The movement of the head restraint helps support the occupant's head by reducing its backward movement and helping absorb some of the forces that may lead to whiplash-type injuries.

Active Head Restraints are effective for collisions at low to medium speeds in which it is said that whiplash injury occurs most.

Active Head Restraints operate only in certain rear-end collisions. After the collision, the head restraints return to their original position.

Adjust the Active Head Restraints properly as described earlier in this section.

PRECAUTIONS ON SEAT BELT USAGE

If you are wearing your seat belt properly adjusted, and you are sitting upright and well back in your seat with both feet on the floor, your chances of being injured or killed in an accident and/or the severity of injury may be greatly reduced. INFINITI strongly encourages you and all of your passengers to buckle up every time you drive, even if your seating position includes a supplemental air bag.

Most U.S. states and Canadian provinces or territories specify that seat belts be worn at all times when a vehicle is being driven.

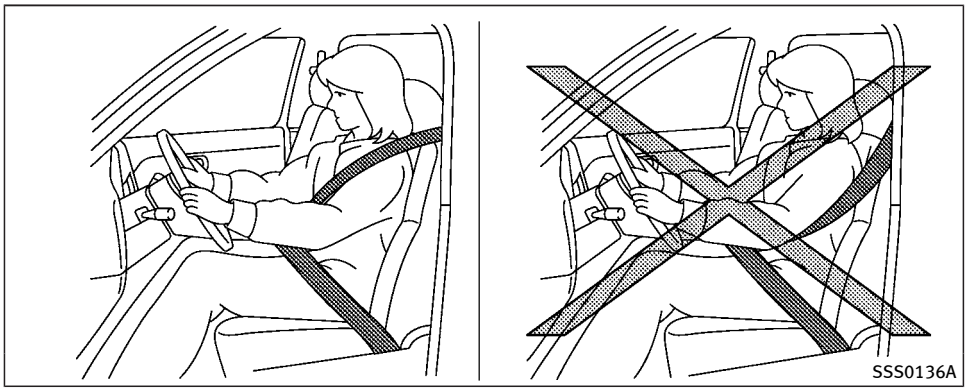

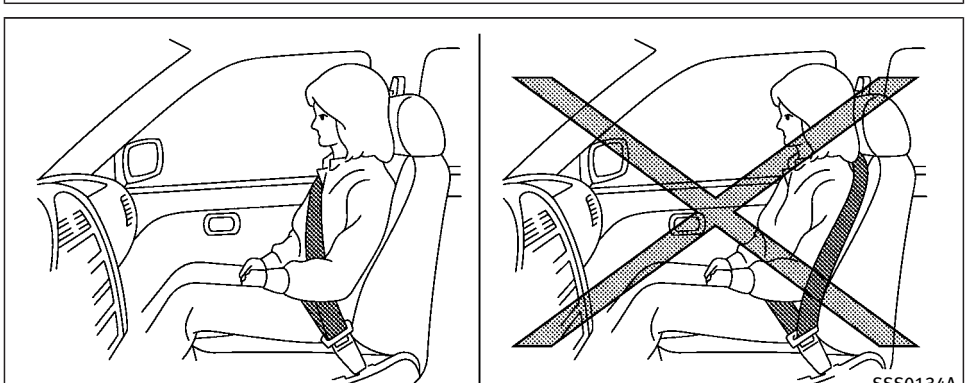

WARNING

- **Every person who drives or rides in this vehicle should use a seat belt at all times. Children should be properly restrained in the rear seat and, if appropriate, in a child restraint.**
- **The seat belt should be properly adjusted to a snug fit. Failure to do so may reduce the effectiveness of the entire restraint system and increase the chance or severity of injury in an accident. Serious injury or death can occur if the seat belt is not worn properly.**
- **Always route the shoulder belt over your shoulder and across your chest. Never put the belt behind your back, under your arm or across your neck. The belt should be away from your face and neck, but not falling off your shoulder.**
- **Position the lap belt as low and snug as possible AROUND THE HIPS, NOT THE WAIST. A lap belt worn too high could increase the risk of internal injuries in an accident.**
- **Be sure the seat belt tongue is securely fastened to the proper buckle.**

- Do not wear the seat belt inside out or twisted. Doing so may reduce its effectiveness.
- Do not allow more than one person to use the same seat belt.
- Never carry more people in the vehicle than there are seat belts.
- If the seat belt warning light glows continuously while the ignition is turned ON with all doors closed and all seat belts fastened, it may indicate a malfunction in the system. Have the system checked by an INFINITI retailer.
- No changes should be made to the seat belt system. For example, do not modify the seat belt, add material, or install devices that may change the seat belt routing or tension. Doing so may affect the operation of the seat belt system. Modifying or tampering with the seat belt system may result in serious personal injury.
- Once a seat belt pretensioner has activated, it cannot be reused and must be replaced together with the retractor. See an INFINITI retailer.
- Removal and installation of pretensioner system components should be done by an INFINITI retailer.
- All seat belt assemblies, including retractors and attaching hardware, should be inspected after any collision by an INFINITI retailer. INFINITI recommends that all seat belt assemblies in use during a collision be replaced unless the collision was minor and the belts show no damage and continue to operate properly. Seat belt assemblies not in use during a collision should also be inspected and replaced if either damage or improper operation is noted.
- All child restraints and attaching hardware should be inspected after any collision. Always follow the restraint manufacturer's inspection instructions and replacement recommendations. The child restraints should be replaced if they are damaged.

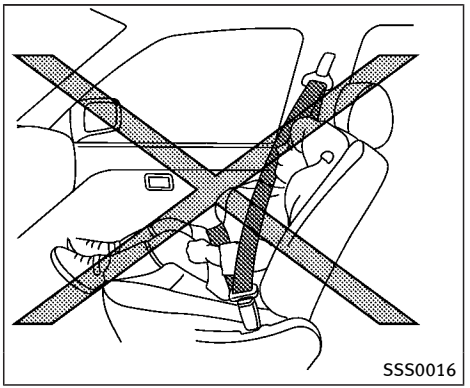
SSS0016

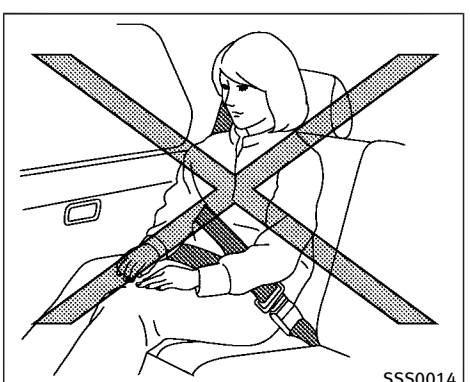
SSS0014

PREGNANT WOMEN

INFINITI recommends that pregnant women use seat belts. The seat belt should be worn snug, and always position the lap belt as low as possible around the hips, not the waist, and place the shoulder belt over your shoulder and across your chest. Never run the lap/shoulder belt over your abdominal area. Contact your doctor for specific recommendations.

INJURED PERSONS

INFINITI recommends that injured persons use seat belts, depending on the injury. Check with your doctor for specific recommendations.

PRE-CRASH SEAT BELTS WITH COMFORT FUNCTION (front seats) (if so equipped)

The pre-crash seat belt tightens the seat belt with a motor to help restrain front seat occupants. This helps reduce the risk of injury in a collision.

The motor retracts the seat belt under the following emergency conditions:

- During emergency braking
- During sudden steering maneuvers
- Activation of the Intelligent Brake Assist (IBA) system. (See "Intelligent Brake Assist (IBA) system" (P.5-70).)

The pre-crash seat belt will not be active when:

- the seat belt is not fastened
- the vehicle speed is under 10 MPH (15 km/h) during emergency braking
- the vehicle speed is under 16 MPH (30 km/h) during sudden steering maneuvers.

The pre-crash seat belt will not be active when the brake pedal is not depressed except when sudden steering maneuvers occur and the Intelligent Brake Assist (IBA) system activates.

The motor also retracts the seat belt when the seat belt is fastened or unfastened. When the seat belt is fastened, the motor tightens the seat belt for a snug fit. When the seat belt is unfastened, the motor retracts the seat belt. If the seat belt is not fully retracted, the motor retracts the seat belt when the door is opened.

Always wear your seat belt correctly and sit upright and well back.

If the motor cannot retract the seat belt when the seat belt is fastened or unfastened, it may indicate the pre-crash seat belt system has a malfunction. Have your INFINITI retailer check and repair the system.

When the seat belt is retracted repeatedly in a short period of time, the motor may not be able to retract the seat belt. After 30 seconds, the motor reactivates and retracts the seat belt. If the seat belt still cannot be retracted by the motor, the pre-crash seat belt system has a malfunction. Have your INFINITI retailer check and repair the system.

THREE-POINT TYPE SEAT BELT

WARNING

- **Every person who drives or rides in this vehicle should use a seat belt at all times.**
- **Do not ride in a moving vehicle when the seatback is reclined. This can be dangerous. The shoulder belt will not be against your body. In an accident, you could be thrown into it and receive neck or other serious injuries. You could also slide under the lap belt and receive serious internal injuries.**

- **For the most effective protection when the vehicle is in motion, the seat should be upright. Always sit well back in the seat with both feet on the floor and adjust the seat belt properly.**
- **Do not allow children to play with the seat belts. Most seating positions are equipped with Automatic Locking Retractor (ALR) mode seat belts. If the seat belt becomes wrapped around a child's neck with the ALR mode activated, the child can be seriously injured or killed if the seat belt retracts and becomes tight. This can occur even if the vehicle is parked. Unbuckle the seat belt to release the child. If the seat belt can not be unbuckled or is already unbuckled, release the child by cutting the seat belt with a suitable tool (such as a knife or scissors) to release the seat belt.**

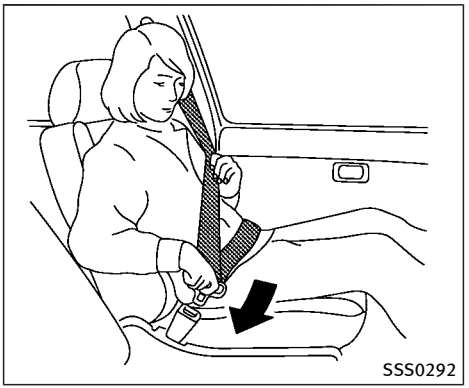

Fastening the seat belts

1. Adjust the seat. (See "Seats" (P.1-3).)
2. Slowly pull the seat belt out of the retractor and insert the tongue into the buckle until you hear and feel the latch engage.
   - **The retractor is designed to lock during a sudden stop or on impact. A slow pulling motion permits the belt to move, and allows you some freedom of movement in the seat.**
   - **If the seat belt cannot be pulled from its fully retracted position, firmly pull the belt and release it. Then smoothly pull the belt out of the retractor.**

3. Position the lap belt portion **low and snug on the hips** as shown.
4. Pull the shoulder belt portion toward the retractor to take up extra slack. Be sure the shoulder belt is routed over your shoulder and across your chest.

The front passenger and rear passenger seating positions' three-point seat belts have two modes of operation:

- Emergency Locking Retractor (ELR)
- Automatic Locking Retractor (ALR)

The Emergency Locking Retractor (ELR) mode allows the seat belt to extend and retract to allow the driver and passengers some freedom of movement in the seat. The ELR locks the seat belt when the vehicle slows down rapidly or during impacts.

The Automatic Locking Retractor (ALR) mode (child restraint mode) locks the seat belt for child restraint installation.

When the ALR mode is activated the seat belt cannot be extended again until the seat belt tongue is detached from the buckle and fully retracted. The seat belt returns to the ELR mode after the seat belt fully retracts. For additional information, see "Child restraints" (P.1-22).

The ALR mode should be used only for child restraint installation. During normal seat belt use by a passenger, the ALR mode should not be activated. If it is activated, it may cause uncomfortable seat belt tension.

WARNING

When fastening the seat belts, be certain that seatbacks are completely secured in the latched position. If they are not completely secured, passengers may be injured in an accident or sudden stop.

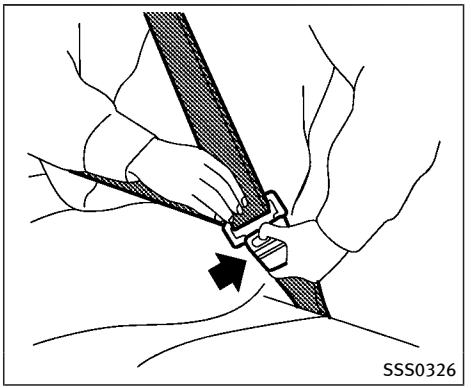

Unfastening the seat belts

To unfasten the seat belt, push the button on the buckle. The seat belt automatically retracts.

Checking seat belt operation

Seat belt retractors are designed to lock seat belt movement by two separate methods:

- When the belt is pulled quickly from the retractor.
- When the vehicle slows down rapidly.

To increase your confidence in the seat belts, check the operation as follows:

- Grasp the shoulder belt and pull forward quickly. The retractor should lock and restrict further belt movement.

If the retractor does not lock during this check or if you have any question about seat belt operation, see an INFINITI retailer.

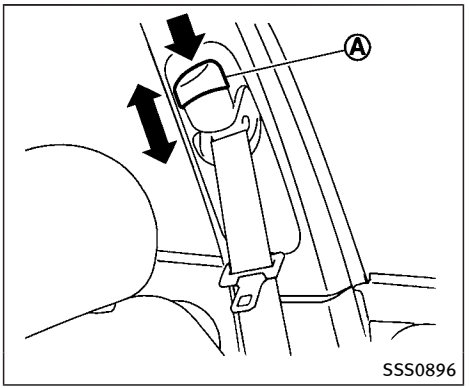

Shoulder belt height adjustment (for front seats)

The shoulder belt anchor height should be adjusted to the position best for you. (See “Precautions on seat belt usage” (P.1-12).)

To adjust, push the button Ⓐ, and then move the shoulder belt anchor to the desired position, so that the belt passes over the center of the shoulder. The belt should be away from your face and neck, but not falling off of your shoulder. Release the adjustment button to lock the shoulder belt anchor into position.

WARNING

- **After adjustment, release the adjustment button and try to move the shoulder belt anchor up and down to make sure it is securely fixed in position.**
- **The shoulder belt anchor height should be adjusted to the position best for you. Failure to do so may reduce the effectiveness of the entire restraint system and increase the chance or severity of injury in an accident.**

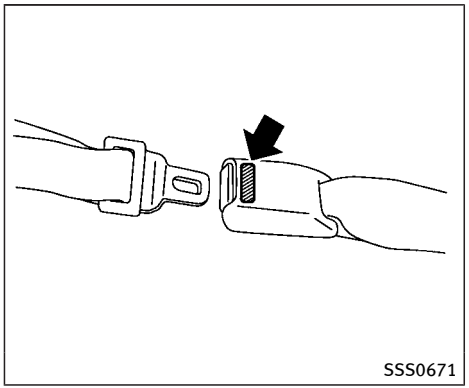

Rear center seat belt

The center seat belt buckle is identified by the CENTER mark. The center seat belt tongue can be fastened only into the center seat belt buckle.

SEAT BELT EXTENDERS

If, because of body size or driving position, it is not possible to properly fit the lap-shoulder belt and fasten it, an extender that is compatible with the installed seat belts is available that can be purchased. The extender adds approximately 8 in (200 mm) of length and may be used for either the driver or front passenger seating position. See an INFINITI retailer for assistance with purchasing an extender if an extender is required.

WARNING

- **Only INFINITI seat belt extenders, made by the same company which made the original equipment seat belts, should be used with the INFINITI seat belts.**
- **Adults and children who can use the standard seat belt should not use an extender. Such unnecessary use could result in serious personal injury in the event of an accident.**
- **Never use seat belt extenders to install child restraints. If the child restraint is not secured properly, the child could be seriously injured in a collision or a sudden stop.**

SEAT BELT MAINTENANCE

- **To clean the seat belt webbing,** apply a mild soap solution or any solution recommended for cleaning upholstery or carpets. Then, wipe with a cloth and allow the seat belts to dry in the shade. Do not allow the seat belts to retract until they are completely dry.
- **If dirt builds up in the shoulder belt guide** of the seat belt anchors, the seat belts may retract slowly. Wipe the shoulder belt guide with a clean, dry cloth.
- **Periodically check to see that the seat belt and the metal components** such as buckles, tongues, retractors, flexible wires and anchors work properly. If loose parts, deterioration, cuts or other damage on the webbing is found, the entire seat belt assembly should be replaced.

WARNING

Do not allow children to play with the seat belts. Most seating positions are equipped with Automatic Locking Retractor (ALR) mode seat belts. If the seat belt becomes wrapped around a child's neck with the ALR mode activated, the child can be seriously injured or killed if the seat belt retracts and becomes tight. This can occur even if the vehicle is parked. Unbuckle the seat belt to release the child. If the seat belt can not be unbuckled or is already unbuckled, release the child by cutting the seat belt with a suitable tool (such as a knife or scissors) to release the seat belt.

Children need adults to help protect them. They need to be properly restrained.

In addition to the general information in this manual, child safety information is available from many other sources, including doctors, teachers, government traffic safety offices, and community organizations. Every child is different, so be sure to learn the best way to transport your child.

There are three basic types of child restraint systems:

- Rear-facing child restraint
- Forward-facing child restraint
- Booster seat

The proper restraint depends on the child's size. Generally, infants up to about 1 year and less than 20 lbs (9 kg) should be placed in rear-facing child restraints. Forward-facing child restraints are available for children who outgrow rear-facing child restraints and are at least 1 year old. Booster seats are used to help position a vehicle lap/shoulder belt on a child who can no longer use a forward-facing child restraint.

WARNING

Infants and children need special protection. The vehicle's seat belts may not fit them properly. The shoulder belt may come too close to the face or neck. The lap belt may not fit over their small hip bones. In an accident, an improperly fitting seat belt could cause serious or fatal injury. Always use appropriate child restraints.

All U.S. states and Canadian provinces or territories require the use of approved child restraints for infants and small children. See "Child restraints" (P.1-22).

A child restraint may be secured in the vehicle by using either the LATCH (Lower Anchor and Tethers for CHildren) system or with the vehicle seat belt. See "Child restraints" (P.1-22) for more information.

INFINITI recommends that all pre-teens and children be restrained in the rear seat. Studies show that children are safer when properly restrained in the rear seat than in the front seat.

This is especially important because your vehicle has a supplemental restraint system (Air bag system) for the front passenger. See "Supplemental restraint system" (P.1-42).

INFANTS

Infants up to at least 1 year old should be placed in a rear-facing child restraint. INFINITI recommends that infants be placed in child restraints that comply with Federal Motor Vehicle Safety Standards or Canadian Motor Vehicle Safety Standards. You should choose a child restraint that fits your vehicle and always follow the manufacturer's instructions for installation and use.

SMALL CHILDREN

Children that are over 1 year old and weigh at least 20 lbs (9 kg) should remain in a rear-facing child restraint as long as possible up to the height or weight limit of the child restraint. Children who outgrow the height or weight limit of the rear-facing child restraint and are at least 1 year old should be secured in a forward-facing child restraint with a harness. Refer to the manufacturer's instructions for minimum and maximum weight and height recommendations. INFINITI recommends that small children be placed in child restraints that comply with Federal Motor Vehicle Safety Standards or Canadian Motor Vehicle Safety Standards. You should choose a child restraint that fits your vehicle and always follow the manufacturer's instructions for installation and use.

LARGER CHILDREN

Children should remain in a forward-facing child restraint with a harness until they reach the maximum height or weight limit allowed by the child restraint manufacturer.

Once a child outgrows the height or weight limit of the harness-equipped forward-facing child restraint, INFINITI recommends that the child be placed in a commercially available booster seat to obtain proper seat belt fit. For a seat belt to fit properly, the booster seat should raise the child so that the shoulder belt is properly positioned across the chest and the top, middle portion of the shoulder. The shoulder belt should not cross the neck or face and should not fall off the shoulder. The lap belt should lie snugly across the lower hips or upper thighs, not the abdomen.

A booster seat can only be used in seating positions that have a three-point type seat belt. The booster seat should fit the vehicle seat and have a label certifying that it complies with Federal Motor Vehicle Safety Standards or Canadian Motor Vehicle Safety Standards. Once the child has grown so the shoulder belt is no longer on or near the face and neck, and the lap belt can be positioned properly across the lower hips or upper thighs, use the seat belt without the booster seat.

WARNING

Never let a child stand or kneel on any seat and do not allow a child in the cargo area.

The child could be seriously injured or killed in a sudden stop or collision.

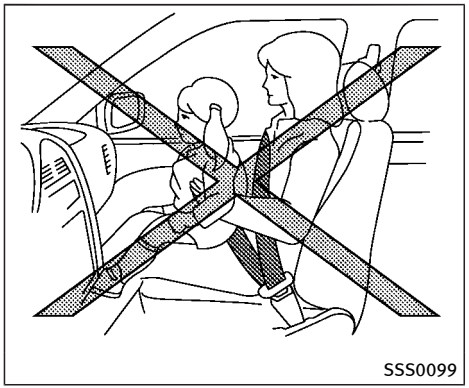
SSS0099

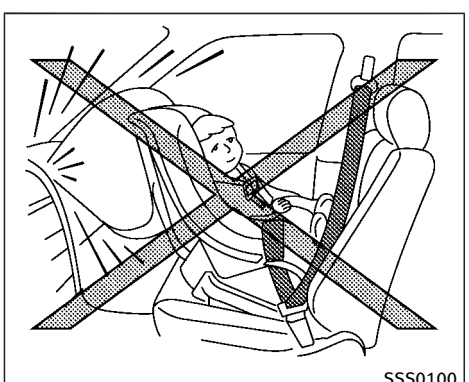
SSS0100

PRECAUTIONS ON CHILD RESTRAINTS

WARNING

- **Failure to follow the warnings and instructions for proper use and installation of child restraints could result in serious injury or death of a child or other passengers in a sudden stop or collision:**
  - **The child restraint must be used and installed properly. Always follow all of the child restraint manufacturer's instructions for installation and use.**
  - **Infants and children should never be held on anyone's lap. Even the strongest adult cannot resist the forces of a collision.**
  - **Do not put a seat belt around both a child and another passenger.**
  - **INFINITI recommends that all child restraints be installed in the rear seat. Studies show that children are safer when properly restrained in the rear seat than in the front seat. If you must install a forward-facing child restraint in the front seat, see "Forward-facing child restraint installation using the seat belts" (P.1-34).**
  - **Even with the INFINITI Advanced Air Bag System, never install a rear-facing child restraint in the front seat. An inflating air bag could seriously injure or kill a child. A rear-facing child restraint must only be used in the rear seat.**
  - **Be sure to purchase a child restraint that will fit the child and vehicle. Some child restraints may not fit properly in your vehicle.**
  - **Child restraint anchor points are designed to withstand loads from child restraints that are properly fitted.**
  - **Never use the anchor points for adult seat belts or harnesses.**
  - **A child restraint with a top tether strap should not be used in the front passenger seat.**
  - **Keep seatbacks as upright as possible after fitting the child restraint.**
  - **Infants and children should always be placed in an appropriate child restraint while in the vehicle.**

- **When the child restraint is not in use, keep it secured with the LATCH system or a seat belt. In a sudden stop or collision, loose objects can injure occupants or damage the vehicle.**

CAUTION

A child restraint in a closed vehicle can become very hot. Check the seating surface and buckles before placing a child in the child restraint.

This vehicle is equipped with a universal child restraint anchor system, referred to as the LATCH (Lower Anchors and Tethers for CHildren) system. Some child restraints include rigid or webbing-mounted attachments that can be connected to these anchors.

For details, see "Lower Anchors and Tethers for CHildren (LATCH) System" (P.1-24).

If you do not have a LATCH compatible child restraint, the vehicle seat belts can be used.

Several manufacturers offer child restraints for infants and small children of various sizes. When selecting any child restraint, keep the following points in mind:

- Choose only a restraint with a label certifying that it complies with Federal Motor Vehicle Safety Standard 213 or Canadian Motor Vehicle Safety Standard 213.
- Check the child restraint in your vehicle to be sure it is compatible with the vehicle's seat and seat belt system.
- If the child restraint is compatible with your vehicle, place your child in the child restraint and check the various adjustments to be sure the child restraint is compatible with your child. Choose a child restraint that is designed for your child's height and weight. Always follow all recommended procedures.
- If the combined weight of the child and child restraint is less than 65 lbs (29.5 kg), you may use either the LATCH anchors or the seat belt to install the child restraint (not both at the same time).
- If the combined weight of the child and child restraint is greater than 65 lbs (29.5 kg), use the vehicle's seat belt (not the lower anchors) to install the child restraint.
- Be sure to follow the child restraint manufacturer's instructions for installation.

All U.S. states and Canadian provinces or territories require that infants and small children be restrained in an approved child restraint at all times while the vehicle is being operated. Canadian law requires the top tether strap on front-facing child restraints to be secured to the designated anchor point on the vehicle.

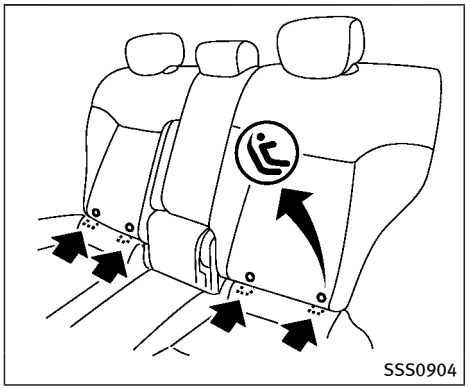

LATCH system lower anchor locations

Lower Anchors and Tethers for CHildren (LATCH) SYSTEM

Your vehicle is equipped with special anchor points that are used with the LATCH (Lower Anchors and Tethers for CHildren) system compatible child restraints. This system may also be referred to as the ISOFIX or ISOFIX compatible system. With this system, you do not have to use a vehicle seat belt to secure the child restraint unless the combined weight of the child and child restraint exceeds 65 lbs (29.5 kg). If the combined weight of the child and child restraint is greater than 65 lbs (29.5 kg), use the vehicle's seat belt (not the lower anchors) to install the child restraint. Be sure to follow the child restraint manufacturer's instructions for installation.

The LATCH anchor points are provided to install child restraints in the rear outboard seating positions only.

LATCH lower anchor

WARNING

Failure to follow the warnings and instructions for proper use and installation of child restraints could result in serious injury or death of a child or other passengers in a sudden stop or collision:

- **Attach LATCH system compatible child restraints only at the locations shown in the illustration.**
- **Do not secure a child restraint in the center rear seating position using the LATCH lower anchors. The child restraint will not be secured properly.**
- **Inspect the lower anchors by inserting your fingers into the lower anchor area. Feel to make sure there are no obstructions over the anchors such as seat belt webbing or seat cushion material. The child restraint will not be secured properly if the lower anchors are obstructed.**

Child restraint anchorages are designed to withstand only those loads imposed by correctly fitted child restraints. Under no circumstances are they to be used for adult seat belts, harnesses or for attaching other items or equipment to the vehicle. Doing so could damage the child restraint anchorages. The child restraint will not be properly installed using the damaged anchorage, and a child could be seriously injured or killed in a collision.

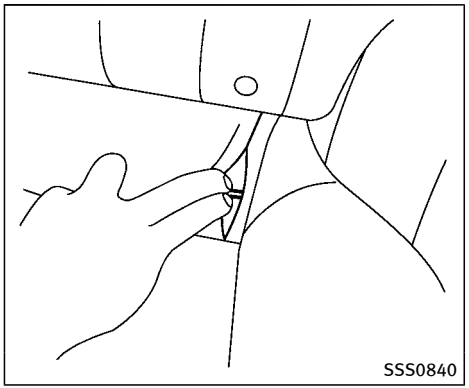

LATCH lower anchor location

LATCH lower anchor location

The LATCH anchors are located at the rear of the seat cushion near the seatback. A label is attached to the seatback to help you locate the LATCH anchors.

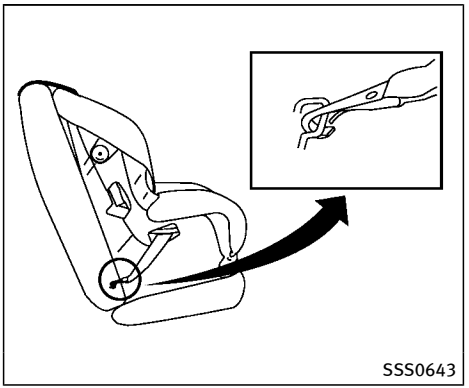

LATCH webbing-mounted attachment

Installing child restraint LATCH lower anchor attachments

LATCH compatible child restraints include two rigid or webbing-mounted attachments that can be connected to two anchors located at certain seating positions in your vehicle. With this system, you do not have to use a vehicle seat belt to secure the child restraint. Check your child restraint for a label stating that it is compatible with LATCH. This information may also be in the instructions provided by the child restraint manufacturer.

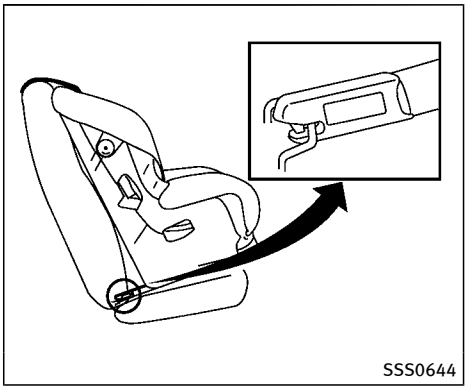

LATCH rigid-mounted attachment

The child restraint top tether strap must be used when installing the child restraint with the LATCH lower anchor attachments or seat belts.

When installing a child restraint, carefully read and follow the instructions in this manual and those supplied with the child restraint.

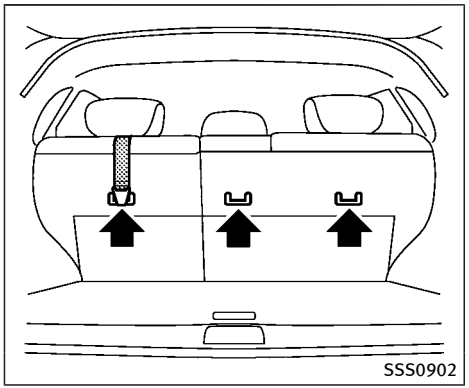

Top tether anchor

WARNING

- **Child restraint anchorages are designed to withstand only those loads imposed by correctly fitted child restraints. Under no circumstances are they to be used for adult seat belts, harnesses or for attaching other items or equipment to the vehicle. Doing so could damage the child restraint anchorages. The child restraint will not be properly installed using the damaged anchorage, and a child could be seriously injured or killed in a collision.**
- **If the cargo cover (if so equipped) contacts the top tether strap when it is attached to the top tether anchor, remove the cargo cover from the vehicle or secure it on the cargo floor below its attachment location. If the cargo cover is not removed, it may damage the top tether strap during a collision. Your child could be seriously injured or killed in a collision if the child restraint top tether strap is damaged.**
- **Do not allow cargo to contact the top tether strap when it is attached to the top tether anchor. Properly secure the cargo so it does not contact the top tether strap. Cargo that is not properly secured or cargo that contacts the top tether strap may damage the top tether strap during a collision. Your child could be seriously injured or killed in a collision if the child restraint top tether strap is damaged.**

Top tether anchor point locations:

Anchor points are located on the back of each seatback for all three seating positions of the rear seat as shown.

REAR-FACING CHILD RESTRAINT INSTALLATION USING LATCH

Refer to all Warnings and Cautions in the “Child safety” (P.1-20) and “Child restraints” (P.1-22) before installing a child restraint.

INFINITI does not recommend the use of the lower anchors if the combined weight of the child and the child restraint exceeds 65 lbs (29.5 kg). If the combined weight of the child and the child restraint is greater than 65 lbs (29.5 kg), use the vehicle’s seat belt (not the lower anchors) to install the child restraint. Be sure to follow the child restraint manufacturer’s instructions for installation.

Follow these steps to install a rear-facing child restraint using the LATCH system:

1. Position the child restraint on the seat. Always follow the child restraint manufacturer’s instructions.

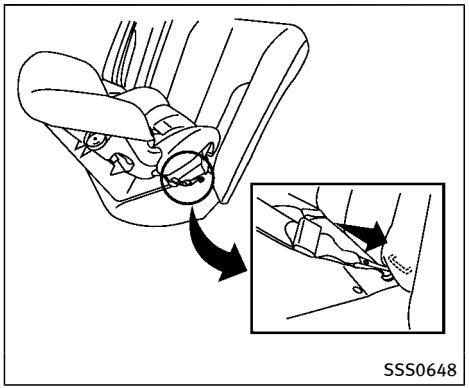

Rear-facing web-mounted — step 2

2. Secure the child restraint anchor attachments to the LATCH lower anchors. Check to make sure the LATCH attachment is properly attached to the lower anchors.

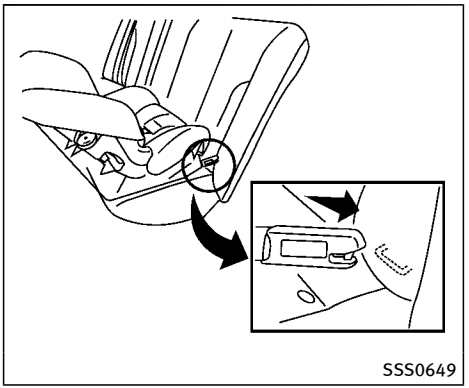

Rear-facing rigid-mounted — step 2

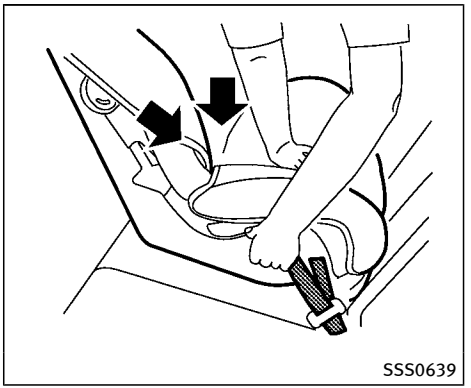

Rear-facing — step 3

3. For child restraints that are equipped with webbing-mounted attachments, remove any additional slack from the anchor attachments. Press downward and rearward firmly in the center of the child restraint with your hand to compress the vehicle seat cushion and seatback while tightening the webbing of the anchor attachments.

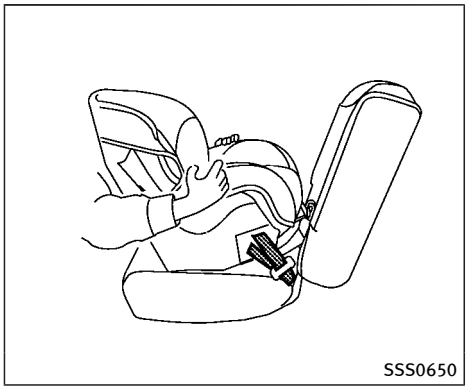

Rear-facing — step 4

4. After attaching the child restraint, test it before you place the child in it. Push it from side to side while holding the child restraint near the LATCH attachment path. The child restraint should not move more than 1 inch (25 mm), from side to side. Try to tug it forward and check to see if the LATCH attachment holds the restraint in place. If the restraint is not secure, tighten the LATCH attachment as necessary, or put the restraint in another seat and test it again. You may need to try a different child restraint or try installing by using the vehicle seat belt (if applicable). Not all child restraints fit in all types of vehicles.
5. Check to make sure the child restraint is properly secured prior to each use. If the child restraint is loose, repeat steps 1 through 4.

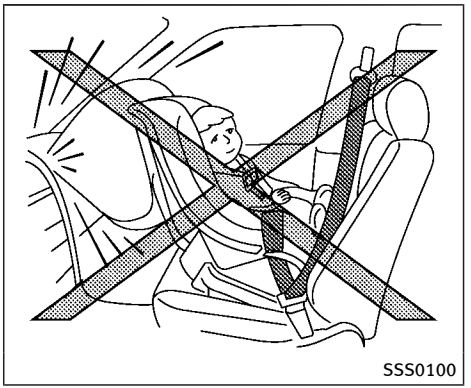

REAR-FACING CHILD RESTRAINT INSTALLATION USING THE SEAT BELTS

WARNING

The three-point seat belt with Automatic Locking Retractor (ALR) must be used when installing a child restraint. Failure to use the ALR mode will result in the child restraint not being properly secured. The restraint could tip over or be loose and cause injury to a child in a sudden stop or collision. Also, it can change the operation of the front passenger air bag. See “Front passenger

air bag and status light” (P.1-49).

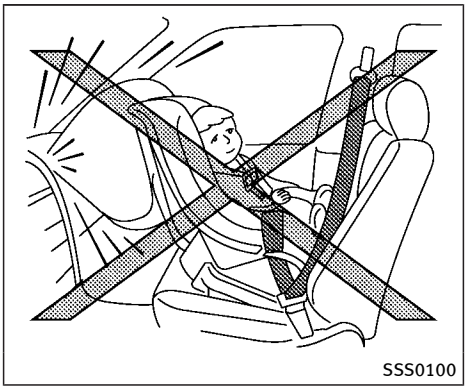

Rear-facing — step 1

Refer to all Warnings and Cautions in the “Child safety” (P.1-20) and “Child restraints” (P.1-22) before installing a child restraint.

INFINITI does not recommend the use of the lower anchors if the combined weight of the child and the child restraint exceeds 65 lbs (29.5 kg). If the combined weight of the child and the child restraint is greater than 65 lbs (29.5 kg), use the vehicle’s seat belt (not the lower anchors) to install the child restraint. Be sure to follow the child restraint manufacturer’s instructions for installation.

Follow these steps to install a rear-facing child restraint using the vehicle seat belts in the rear seats:

1. **Child restraints for infants must be used in the rear-facing direction and therefore must not be used in the front seat.** Position the child restraint on the seat. Always follow the restraint manufacturer’s instructions.

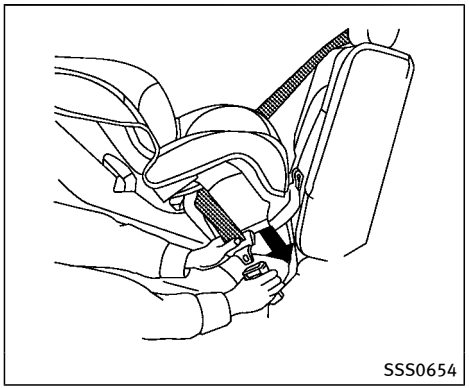

Rear-facing — step 2

2. Route the seat belt tongue through the child restraint and insert it into the buckle until you hear and feel the latch engage. Be sure to follow the child restraint manufacturer's instructions for belt routing.

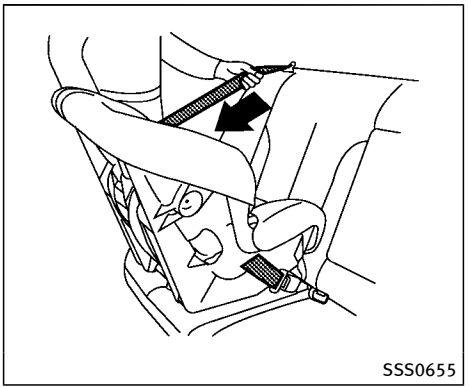

Rear-facing — step 3

3. Pull the shoulder belt until the belt is fully extended. At this time, the seat belt retractor is in the Automatic Locking Retractor (ALR) mode (child restraint mode). It reverts to the Emergency Locking Retractor (ELR) mode when the seat belt is fully retracted.

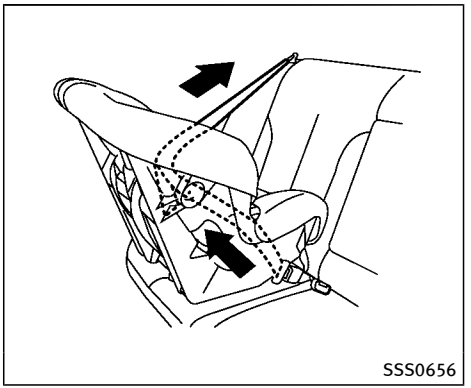

Rear-facing — step 4

4. Allow the seat belt to retract. Pull up on the shoulder belt to remove any slack in the belt.

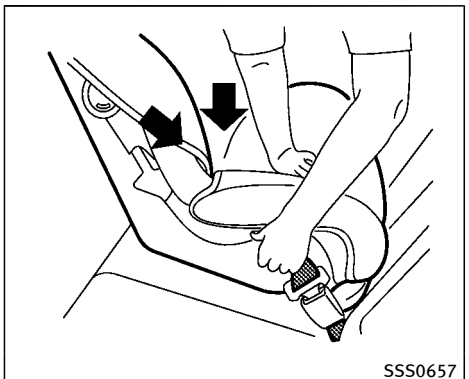

Rear-facing — step 5

5. Remove any additional slack from the seat belt; press downward and rearward firmly in the center of the child restraint to compress the vehicle seat cushion and seatback while pulling up on the seat belt.

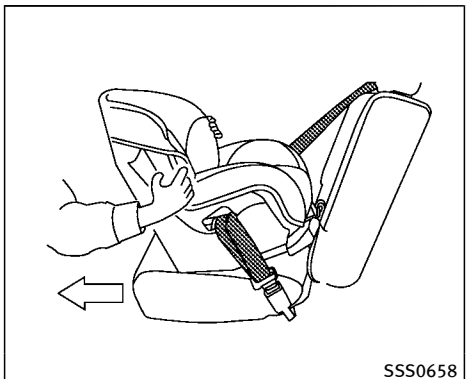

Rear-facing — step 6

6. After attaching the child restraint, test it before you place the child in it. Push it from side to side while holding the child restraint near the seat belt path. The child restraint should not move more than 1 inch (25 mm), from side to side. Try to tug it forward and check to see if the belt holds the restraint in place. If the restraint is not secure, tighten the seat belt as necessary, or put the restraint in another seat and test it again. You may need to try a different child restraint. Not all child restraints fit in all types of vehicles.
7. Check to make sure that the child restraint is properly secured prior to each use. If the seat belt is not locked, repeat steps 1 through 6.

After the child restraint is removed and the seat belt fully retracted, the ALR mode (child restraint mode) is canceled.

FORWARD-FACING CHILD RESTRAINT INSTALLATION USING LATCH

Refer to all Warnings and Cautions in the “Child safety” (P.1-20) and “Child restraints” (P.1-22) before installing a child restraint.

INFINITI does not recommend the use of the lower anchors if the combined weight of the child and the child restraint exceeds 65 lbs (29.5 kg). If the combined weight of the child and the child restraint is greater than 65 lbs (29.5 kg), use the vehicle’s seat belt (not the lower anchors) to install the child restraint. Be sure to follow the child restraint manufacturer’s instructions for installation.

Follow these steps to install a forward-facing child restraint using the LATCH system:

1. Position the child restraint on the seat. Always follow the child restraint manufacturer's instructions.

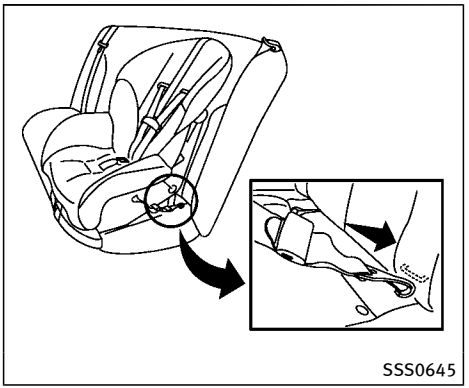

Forward-facing web-mounted — step 2

2. Secure the child restraint anchor attachments to the LATCH lower anchors. Check to make sure the LATCH attachment is properly attached to the lower anchors.

   If the child restraint is equipped with a top tether strap, route the top tether strap and secure the tether strap to the tether anchor point. See "Installing top tether strap" in this section. Do not install child restraints that require the use of a top tether strap in seating positions that do not have a top tether anchor.

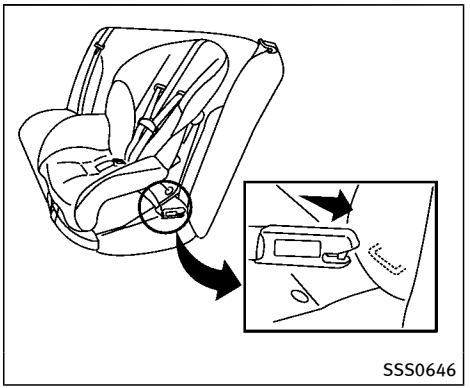

Forward-facing rigid-mounted — step 2

3. The back of the child restraint should be secured against the vehicle seatback.

   If necessary, adjust or remove the head restraint to obtain the correct child restraint fit. If the head restraint is removed, store it in a secure place. **Be sure to reinstall the head restraint when the child restraint is removed.** See "Head restraints/headrests" (P.1-8) for head restraint adjustment information.

   If the seating position does not have an adjustable head restraint and it is

interfering with the proper child restraint fit, try another seating position or a different child restraint.

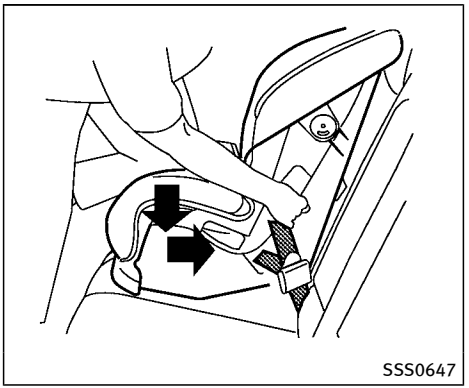

Forward-facing — step 4

4. For child restraints that are equipped with webbing-mounted attachments, remove any additional slack from the anchor attachments. Press downward and rearward firmly in the center of the child restraint with your knee to compress the vehicle seat cushion and seatback while tightening the webbing of the anchor attachments.
5. Tighten the tether strap according to the manufacturer's instructions to remove any slack.

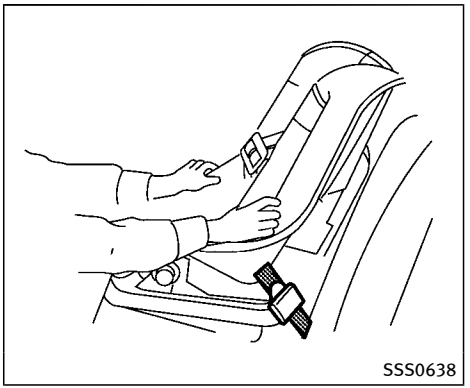

Forward-facing — step 6

6. After attaching the child restraint, test it before you place the child in it. Push it from side to side while holding the child restraint near the LATCH attachment path. The child restraint should not move more than 1 inch (25 mm), from side to side. Try to tug it forward and check to see if the LATCH attachment holds the restraint in place. If the restraint is not secure, tighten the LATCH attachment as necessary, or put the restraint in another seat and test it again. You may need to try a different child restraint. Not all child restraints fit in all types of vehicles.

7. Check to make sure the child restraint is properly secured prior to each use. If the child restraint is loose, repeat steps 1 through 6.

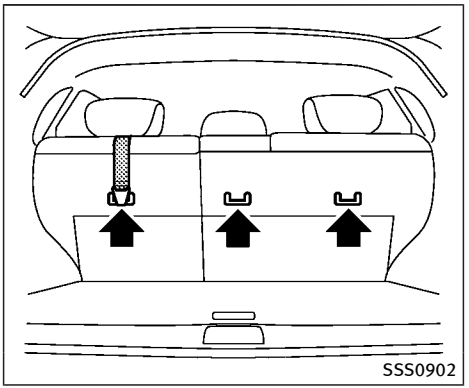

Installing top tether strap

The child restraint top tether strap must be used when installing the child restraint with the LATCH lower anchor attachments.

First, secure the child restraint with the LATCH lower anchors (rear outboard seating positions only).

1. If necessary, raise or remove the head restraint to position the top tether strap over the top of the seatback. If the head restraint is removed, store it in a secure place. Be sure to reinstall the head restraint when the child restraint is removed. See “Head restraints/head-rests” (P.1-8) for head restraint adjustment, removal and installation information.
2. Secure the top tether strap to the tether anchor point on the back of seatback behind the child restraint.
3. Refer to the appropriate child restraint installation procedure steps in this section before tightening the tether strap.

If you have any questions when installing a top tether strap, consult your INFINITI retailer for details.

FORWARD-FACING CHILD RESTRAINT INSTALLATION USING THE SEAT BELTS

WARNING

The three-point seat belt with Automatic Locking Retractor (ALR) must be used when installing a child restraint. Failure to use the ALR mode will result in the child restraint not being properly secured. The restraint could tip over or be loose and cause injury to a child in a sudden stop or collision.

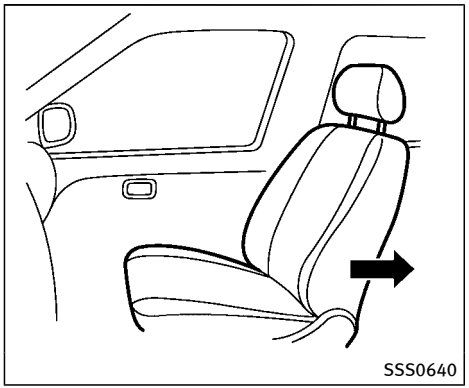

Forward-facing (front passenger seat) — step 1

Refer to all Warnings and Cautions in the "Child safety" and "Child restraints" sections before installing a child restraint.

INFINITI does not recommend the use of the lower anchors if the combined weight of the child and the child restraint exceeds 65 lbs (29.5 kg). If the combined weight of the child and the child restraint is greater than 65 lbs (29.5 kg), use the vehicle's seat belt (not the lower anchors) to install the child restraint. Be sure to follow the child restraint manufacturer's instructions for installation.

Follow these steps to install a forward-facing child restraint using the vehicle seat belt in the rear seats or in the front passenger seat:

1. **If you must install a child restraint in the front seat, it should be placed in a forward-facing direction only. Move the seat to the rearmost position. Child restraints for infants must be used in the rear-facing direction and, therefore, must not be used in the front seat.**
2. Position the child restraint on the seat. Always follow the child restraint manufacturer's instructions.

   The back of the child restraint should be secured against the vehicle seatback.

   If necessary, adjust or remove the head restraint to obtain the correct child restraint fit. If the head restraint is removed, store it in a secure place. **Be sure to reinstall the head restraint when the child restraint is removed.** See "Head restraints/headrests" (P.1-8) for head restraint adjustment, removal and installation information.

   If the seating position does not have an adjustable head restraint and it is interfering with the proper child restraint fit, try another seating position or a different child restraint.

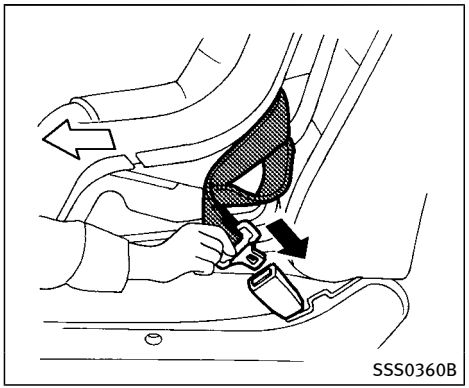

Forward-facing — step 3

3. Route the seat belt tongue through the child restraint and insert it into the buckle until you hear and feel the latch engage. Be sure to follow the child restraint manufacturer's instructions for belt routing.

   If the child restraint is equipped with a top tether strap, route the top tether strap and secure the tether strap to the tether anchor point (rear seat installation only). See "Installing top tether strap" (P.1-38). Do not install child restraints that require the use of a top tether strap in seating positions that do not have a top tether anchor.

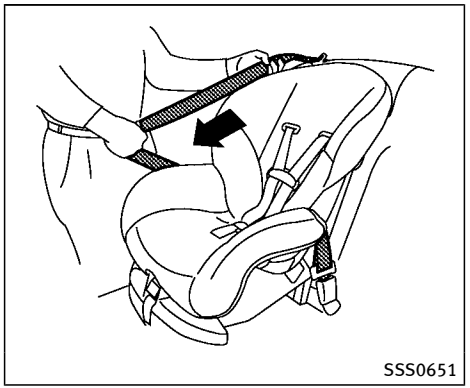

Forward-facing — step 4

4. Pull the shoulder belt until the belt is fully extended. At this time, the seat belt retractor is in the Automatic Locking Retractor (ALR) mode (child restraint mode). It reverts to Emergency Locking Retractor (ELR) mode when the seat belt is fully retracted.

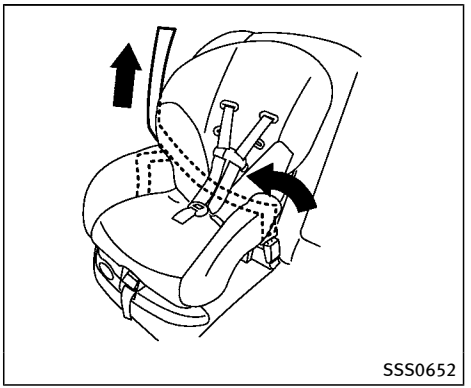

Forward-facing — step 5

5. Allow the seat belt to retract. Pull up on the shoulder belt to remove any slack in the belt.

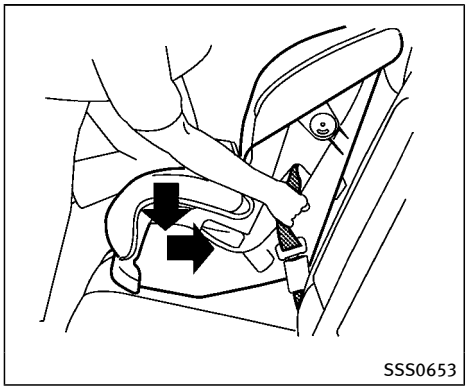

Forward-facing — step 6

6. Remove any additional slack from the seat belt; press downward and rearward firmly in the center of the child restraint with your knee to compress the vehicle seat cushion and seatback while pulling up on the seat belt.
7. Tighten the tether strap according to the manufacturer's instructions to remove any slack.

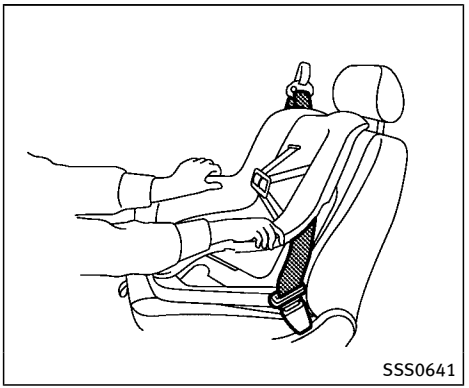

Forward-facing — step 8

8. After attaching the child restraint, test it before you place the child in it. Push it from side to side while holding the child restraint near the seat belt path. The child restraint should not move more than 1 inch (25 mm), from side to side. Try to tug it forward and check to see if the belt holds the restraint in place. If the restraint is not secure, tighten the seat belt as necessary, or put the restraint in another seat and test it again. You may need to try a different child restraint. Not all child restraints fit in all types of vehicles.
9. Check to make sure the child restraint is properly secured prior to each use. If the seat belt is not locked, repeat steps 2 through 8.

Forward-facing — step 10

10. If the child restraint is installed in the front passenger seat, place the ignition switch in the ON position. The front passenger air bag status light should illuminate. If this light is not illuminated, see “Front passenger air bag and status light” in this section. **Move the child restraint to another seating position.** Have the system checked by an INFINITI retailer.

After the child restraint is removed and the seat belt is fully retracted, the ALR mode (child restraint mode) is canceled.

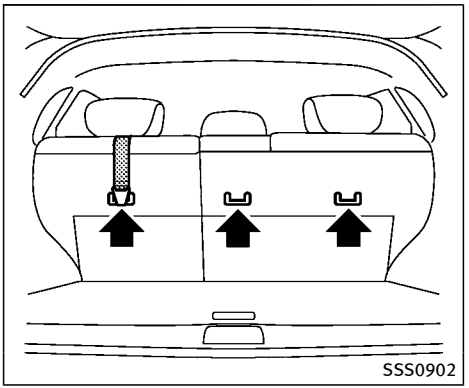

Installing top tether strap

The child restraint top tether strap must be used when installing the child restraints with the seat belts.

First, secure the child restraints with the seat belts.

1. If necessary, raise or remove the head restraint to position the top tether strap over the top of the seatback. If the head restraint is removed, store it in a secure place. Be sure to reinstall the head restraint when the child restraint is removed. See “Head restraints/head-rests” (P.1-8) for head restraint adjustment, removal and installation information.
2. Secure the top tether strap to the tether anchor point on the back of seatback behind the child restraint.
3. Refer to the appropriate child restraint installation procedure steps in this section before tightening the tether strap.

If you have any questions when installing a top tether strap, consult your INFINITI retailer for details.

BOOSTER SEATS

Precautions on booster seats

WARNING

If a booster seat and seat belt are not used properly, the risk of a child being injured in a sudden stop or collision greatly increases:

- **Make sure the shoulder portion of the belt is away from the child's face and neck and the lap portion of the belt does not cross the stomach.**
- **Make sure the shoulder belt is not behind the child or under the child's arm.**
- **A booster seat must only be installed in a seating position that has a lap/shoulder belt.**

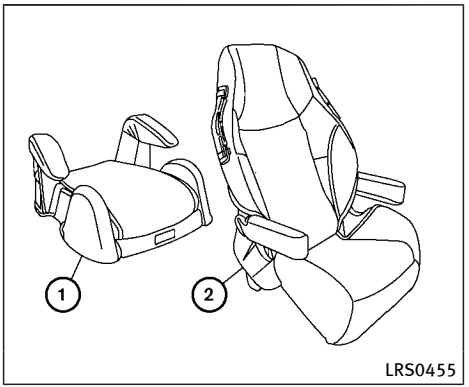

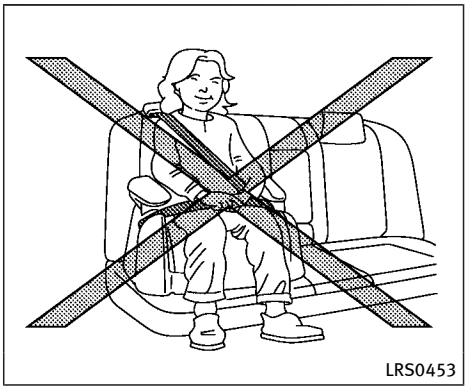

Booster seats of various sizes are offered by several manufacturers. When selecting any booster seat, keep the following points in mind:

- Choose only a booster seat with a label certifying that it complies with Federal Motor Vehicle Safety Standard 213 or Canadian Motor Vehicle Safety Standard 213.
- Check the booster seat in your vehicle to be sure it is compatible with the vehicle's seat and seat belt system.
- Make sure the child's head will be properly supported by the booster seat or vehicle seat. The seatback must be at or above the center of the child's ears. For example, if a low back booster seat ① is chosen, the vehicle seatback must be at or above the center of the child's ears. If the seatback is lower than the center of the child's ears, a high back booster seat ② should be used.

- If the booster seat is compatible with your vehicle, place your child in the booster seat and check the various adjustments to be sure the booster seat is compatible with your child. Always follow all recommended procedures.

All U.S. states and Canadian provinces or territories require that infants and small children be restrained in an approved child restraint at all times while the vehicle is being operated.

The instructions in this section apply to booster seat installation in the rear seats or the front passenger seat.

Booster seat installation

CAUTION

Do not use the lap/shoulder belt Automatic Locking Retractor (ALR) mode when using a booster seat with the seat belts.

Refer to all warnings and cautions in the "Child safety" (P.1-20), "Child restraints" (P.1-22) and "Booster seats" (P.1-39) before installing a booster seat.

Follow these steps to install a booster seat in the rear seat or in the front passenger seat:

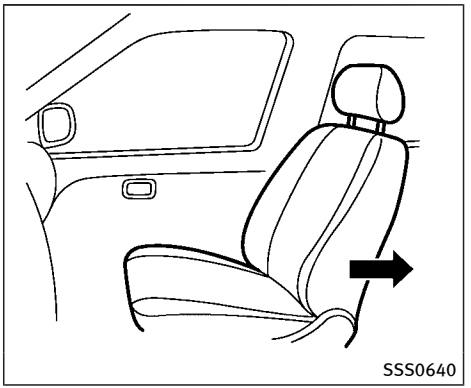

1. **If you must install a booster seat in the front seat, move the seat to the rearmost position.**
2. Position the booster seat on the seat. Only place it in a forward-facing direction. Always follow the booster seat manufacturer's instructions.

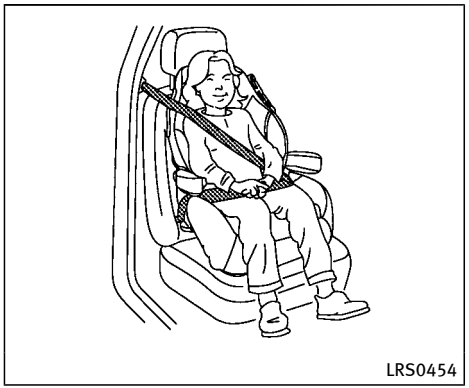

Front passenger position

3. The booster seat should be positioned on the vehicle seat so that it is stable.

   If necessary, adjust or remove the head restraint to obtain the correct booster seat fit. If the head restraint is removed, store it in a secure place. **Be sure to reinstall the head restraint when the booster seat is removed.** See “Head restraints/headrests” (P.1-8) for head restraint adjustment, removal and installation information.

   If the seating position does not have an adjustable head restraint and it is interfering with the proper booster seat fit, try another seating position or a different booster seat.

4. Position the lap portion of the seat belt low and snug on the child’s hips. Be sure to follow the booster seat manufacturer’s instructions for adjusting the seat belt routing.
5. Pull the shoulder belt portion of the seat belt toward the retractor to take up extra slack. Be sure the shoulder belt is positioned across the top, middle portion of the child’s shoulder. Be sure to follow the booster seat manufacturer’s instructions for adjusting the seat belt routing.
6. Follow the warnings, cautions and instructions for properly fastening a seat belt shown in the “Seat belts” (P.1-12).

7. If the booster seat is installed in the front passenger seat, push the ignition switch to the ON position. The front passenger air bag status light may or may not illuminate depending on the size of the child and the type of booster seat used. (See “Front passenger air bag and status light” (P.1-49).)

PRECAUTIONS ON SUPPLEMENTAL RESTRAINT SYSTEM

This Supplemental Restraint System (SRS) section contains important information concerning the following systems.

- Driver and passenger supplemental front-impact air bag (INFINITI Advanced Air Bag System)
- Front seat-mounted side-impact supplemental air bag
- Roof-mounted curtain side-impact and rollover supplemental air bag
- Seat belt with pretensioner

Supplemental front-impact air bag system: The INFINITI Advanced Air Bag System can help cushion the impact force to the head and chest of the driver and front passenger in certain frontal collisions.

Front seat-mounted side-impact supplemental air bag system: This system can help cushion the impact force to the chest and pelvis area of the driver and front passenger in certain side impact collisions. The side air bag is designed to inflate on the side where the vehicle is impacted.

Roof-mounted curtain side-impact and rollover supplemental air bag system: This system can help cushion the impact force to the head of occupants in front and rear outboard seating positions in certain side impact or rollover collisions. In a side impact, the curtain air bags are designed to inflate on the side where the vehicle is impacted. In a rollover, the curtain air bags on both sides are designed to inflate. Under both side-impact and rollover situations, the curtain air bags will remain inflated for a short period of time.

These supplemental restraint systems are designed to **supplement** the crash protection provided by the driver and passenger seat belts and are **not a substitute** for them. Seat belts should always be correctly worn and the occupant seated a suitable distance away from the steering wheel, instrument panel and door finishers. (See “Seat belts” (P.1-12) for instructions and precautions on seat belt usage.)

The supplemental air bags operate only when the ignition switch is in the ON position.

After pushing the ignition switch to the ON position, the supplemental air bag warning light illuminates. The supplemental air bag warning light will turn off after about 7 seconds if the systems are operational.

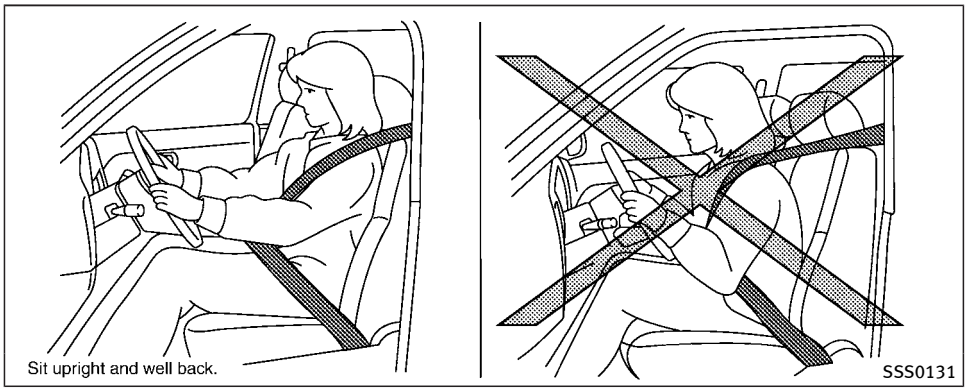

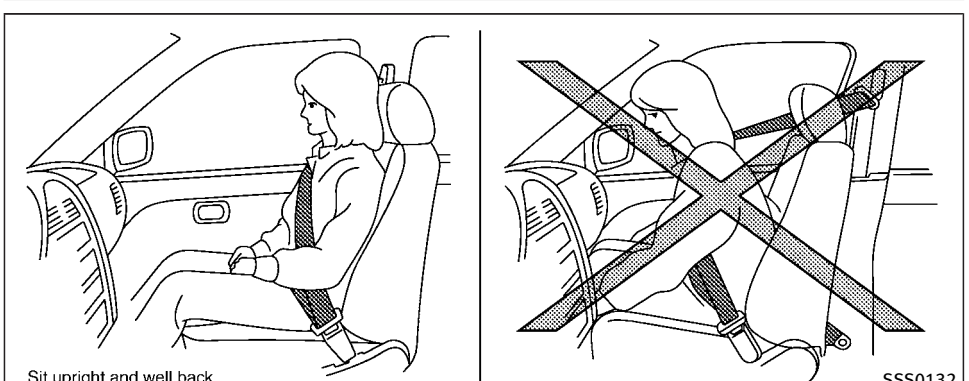

WARNING

- **The front air bags ordinarily will not inflate in the event of a side impact, rear impact, rollover, or lower severity frontal collision. Always wear your seat belts to help reduce the risk or severity of injury in various kinds of accidents.**
- **The front passenger air bag will not inflate if the passenger air bag status light is lit or if the front passenger seat is unoccupied. See "Front passenger air bag and status light" (P.1-49).**
- **The seat belts and the front air bags are most effective when you are sitting well back and upright in the seat. The front air bags inflate with great force. Even with the INFINITI Advanced Air Bag System, if you are unrestrained, leaning forward, sitting sideways or out of position in any way, you are at greater risk of injury or death in a crash. You may also receive serious or fatal injuries from the front air bag if you are up against it when it inflates. Always sit back against the seatback and as far-away as practical from the steering wheel or instrument panel. Always use the seat belts.**

- The driver and front passenger seat belt buckles are equipped with sensors that detect if the seat belts are fastened. The Advanced Air Bag System monitors the severity of a collision and seat belt usage then inflates the air bags as needed. Failure to properly wear seat belts can increase the risk or severity of injury in an accident.
- The front passenger seat is equipped with occupant classification sensors (weight sensors) that turn the front passenger air bag OFF under some conditions. This sensor is only used in this seat. Failure to be properly seated and wearing the seat belt can increase the risk or severity of injury in an accident. See “Front passenger air bag and status light” (P.1-49).
- Keep hands on the outside of the steering wheel. Placing them inside the steering wheel rim could increase the risk of injury if the front air bag inflates.

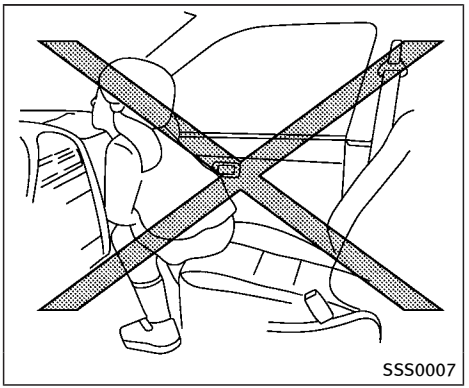
SSS0007

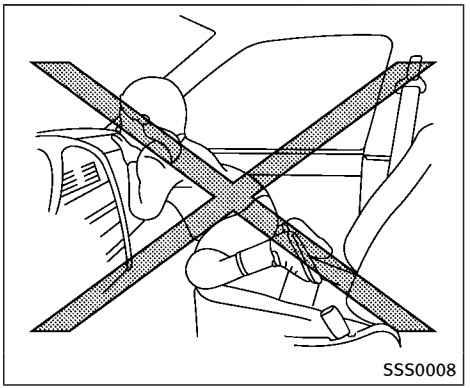
SSS0008

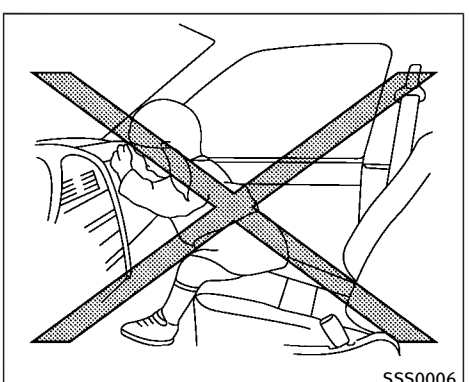
SSS0006

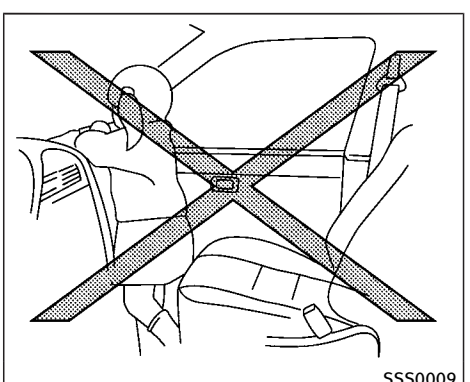
SSS0009

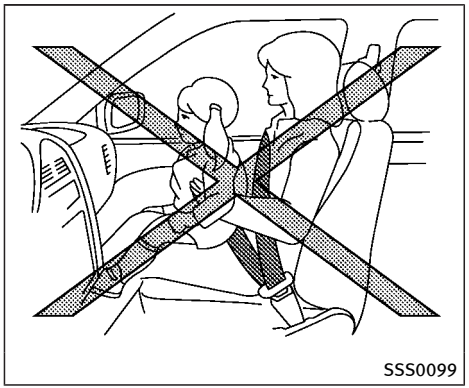

SSS0099

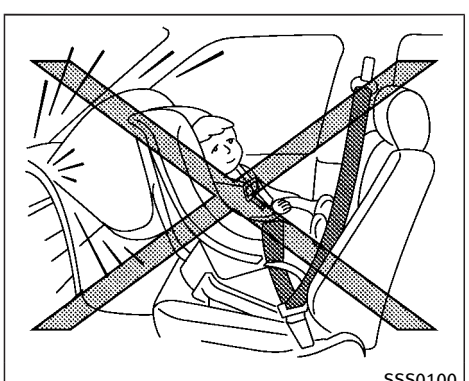

SSS0100

WARNING

- **Never let children ride unrestrained or extend their hands or face out of the window. Do not attempt to hold them in your lap or arms. Some examples of dangerous riding positions are shown in the illustrations.**
- **Children may be severely injured or killed when the front air bags, side air bags or curtain air bags inflate if they are not properly restrained. Pre-teens and children should be properly restrained in the rear seat, if possible.**
- **Even with the INFINITI Advanced Air Bag System, never install a rear-facing child restraint in the front seat. An inflating front air bag could seriously injure or kill your child. See "Child restraints" (P.1-22) for details.**

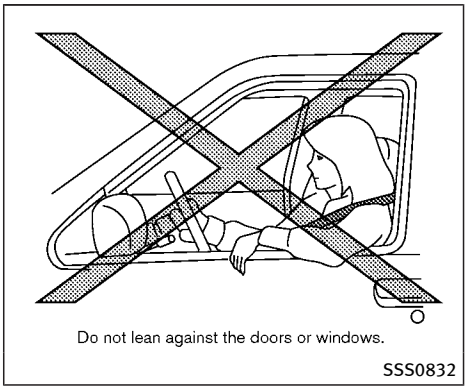

Do not lean against the doors or windows.

SSS0832

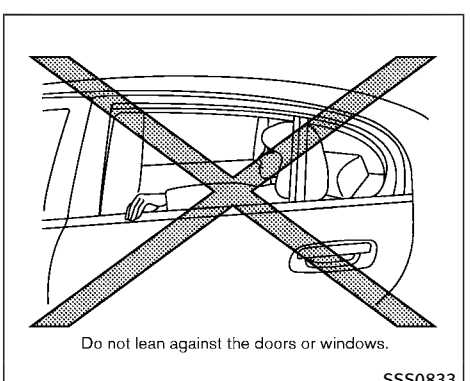

Do not lean against the doors or windows.

SSS0833

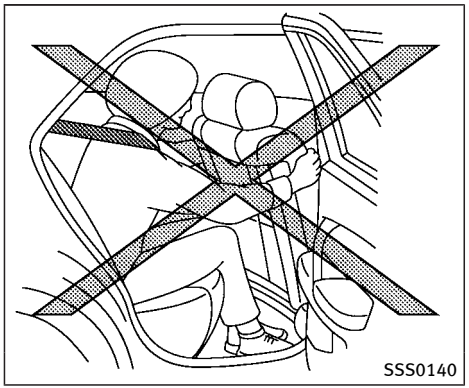

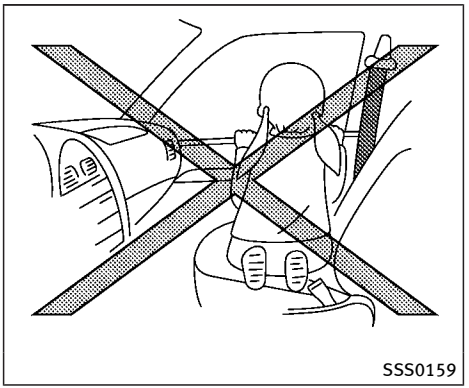

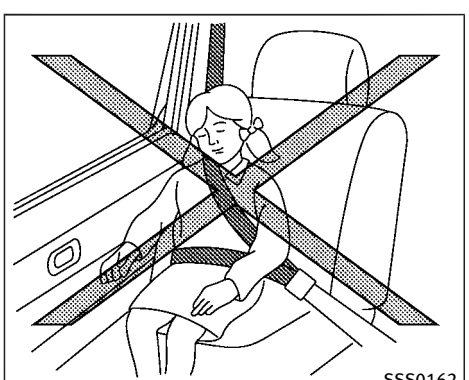

WARNING

Front seat-mounted side-impact supplemental air bags and roof-mounted curtain side-impact and rollover supplemental air bags:

- **The side air bags and curtain air bags ordinarily will not inflate in the event of a frontal impact, rear impact or lower severity side collision. Always wear your seat belts to help reduce the risk or severity of injury in various kinds of accidents.**
- **The seat belts, the side air bags and curtain air bags are most effective when you are sitting well back and upright in the seat. The side air bags and curtain air bags inflate with great force. Do not allow anyone to place their hand, leg or face near the side air bags on the side of the seatback of the front seat or near the side roof rails. Do not allow anyone sitting in the front seats or rear outboard seats to extend their hand out of the window or lean against the door. Some examples of dangerous riding positions are shown in the previous illustrations.**
- **When sitting in the rear seat, do not hold onto the seatback of the front seat. If the side air bags inflates, you may be seriously injured. Be especially careful with children, who should always be properly restrained. Some examples of dangerous riding positions are shown in the illustrations.**
- **Do not use seat covers on the front seatbacks. They may interfere with side air bags inflation.**

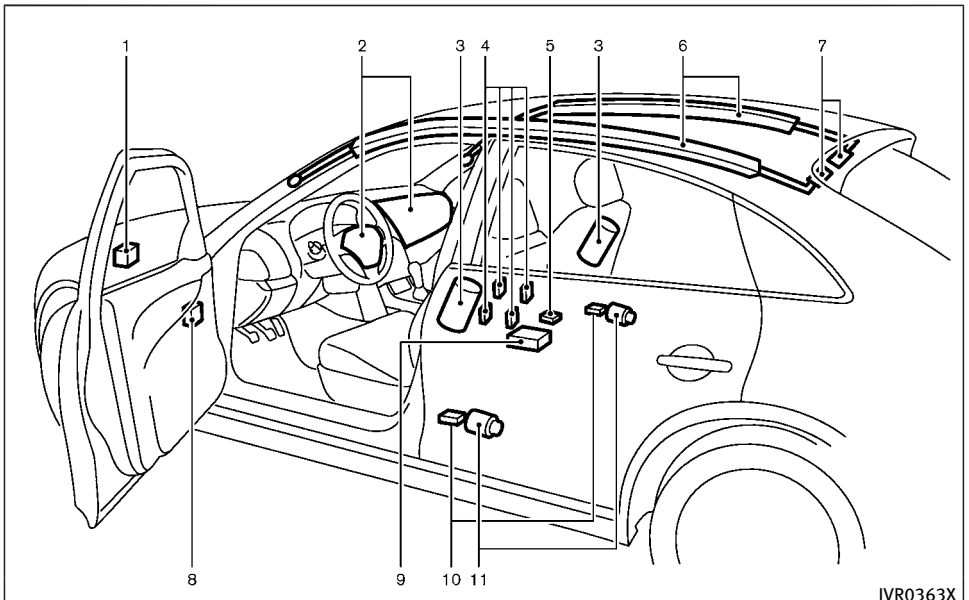

1. Crash zone sensor
2. Supplemental front-impact air bag modules
3. Front seat-mounted side-impact supplemental air bag modules
4. Occupant classification sensors (weight sensors)
5. Occupant detection system control unit
6. Roof-mounted curtain side-impact and rollover supplemental air bags
7. Roof-mounted curtain side-impact and rollover supplemental air bag inflators
8. Door satellite sensors
9. Air bag Control Unit (ACU)
10. Satellite sensors
11. Seat belt pretensioners

INFINITI ADVANCED AIR BAG SYSTEM (front seats)

WARNING

To ensure proper operation of the passenger's advanced air bag system, please observe the following items.

- **Do not allow a passenger in the rear seat to push or pull on the seatback pocket.**
- **Do not place heavy loads heavier than 9 lbs. (4kg) on the seatback, head restraint or in the seatback pocket.**
- **Do not store luggage behind the seat that can press into the seatback.**
- **Confirm the operating condition with the front passenger air bag status light.**
- **If you notice that the front passenger air bag status light is not operating in accordance with the above description, please take your vehicle to your INFINITI retailer to check the passenger seat advanced air bag system.**

- **Until you have confirmed with your retailer that your passenger seat advanced air bag is working properly, position the occupants in the rear seating positions.**

This vehicle is equipped with the INFINITI Advanced Air Bag System for the driver and front passenger seats. This system is designed to meet certification requirements under U.S. regulations. It is also permitted in Canada. **All of the information, cautions and warnings in this manual apply and must be followed.**

The driver supplemental front-impact air bag is located in the center of the steering wheel. The passenger supplemental front-impact air bag is mounted in the instrument panel above the glove box. The front air bags are designed to inflate in higher severity frontal collisions, although they may inflate if the forces in another type of collision are similar to those of a higher severity frontal impact. They may not inflate in certain frontal collisions. Vehicle damage (or lack of it) is not always an indication of proper front air bag operation.

The INFINITI Advanced Air Bag System has dual stage air bag inflators. The system monitors information from the Air bag Control Unit (ACU), seat belt buckle sensors and the occupant classification sensors (weight sensors). Inflator operation is based on the severity of a collision and seat belt usage for the driver. For the front passenger, the occupant classification sensors are also monitored. Based on information from the sensors, only one front air bag may inflate in a crash, depending on the crash severity and whether the front occupants are belted or unbelted. Additionally, the front passenger air bag may be automatically turned OFF under some conditions, depending on the information provided by the occupant classification sensors. If the front passenger air bag is OFF, the passenger air bag status light will be illuminated (if the seat is unoccupied, the light will not be illuminated, but the air bag will be off). (See “Front passenger air bag and status light” (P.1-49) for further details.) One front air bag inflating does not indicate improper performance of the system.

If you have any questions about your air bag system, contact INFINITI or an INFINITI retailer. If you are considering modification of your vehicle due to a disability, you may also contact INFINITI. Contact information is contained in the front of this Owner’s Manual.

When a front air bag inflates, a fairly loud noise may be heard, followed by release of smoke. This smoke is not harmful and does not indicate a fire. Care should be taken not to inhale it, as it may cause irritation and choking. Those with a history of a breathing condition should get fresh air promptly.

Front air bags, along with the use of seat belts, help to cushion the impact force on the head and chest of the front occupants. They can help save lives and reduce serious injuries. However, an inflating front air bag may cause facial abrasions or other injuries. Front air bags do not provide restraint to the lower body.

Even with INFINITI advanced air bags, seat belts should be correctly worn and the driver and passenger seated upright as far as practical away from the steering wheel or instrument panel. The front air bags inflate quickly in order to help protect the front occupants. Because of this, the force of the front air bag inflating can increase the risk of injury if the occupant is too close to, or is against, the air bag module during

inflation.

The front air bags deflate quickly after a collision.

The front air bags operate only when the ignition switch is in the ON position.

After pushing the ignition switch to the ON position, the supplemental air bag warning light illuminates. The supplemental air bag warning light will turn off after about 7 seconds if the system is operational.

Front passenger air bag status light

Front passenger air bag and status light

WARNING

The front passenger air bag is designed to automatically turn OFF under some conditions. Read this section carefully to learn how it operates. Proper use of the seat, seat belt and child restraints is necessary for most effective protection. Failure to follow all instructions in this manual concerning the use of seats, seat belts and child restraints can increase the risk or severity of injury in an accident.

Status light:

The front passenger air bag status light is located under the climate controls. After the ignition switch is placed in the "ON" position, the front passenger air bag status light on the instrument panel illuminates for about 7 seconds and then turns off or illuminates depending on the front passenger seat occupied status. The light operates as follows:

- Unoccupied passenger seat: The light is OFF and the front passenger air bag is OFF and will not inflate in a crash.
- Passenger seat occupied by a small adult, child or child restraint as outlined in this section: The light illuminates to indicate that the front passenger air bag is OFF and will not inflate in a crash.
- Occupied passenger seat and the passenger meets the conditions outlined in this section: The light is OFF to indicate that the front passenger air bag is operational.

Front passenger air bag:

The front passenger air bag is designed to automatically turn OFF when the vehicle is operated under some conditions as described below as permitted by U.S. regulations. If the front passenger air bag is OFF, it will not inflate in a crash. The driver air bag and other air bags in your vehicle are not part of this system.

The purpose of the regulation is to help reduce the risk of injury or death from an inflating air bag to certain front passenger seat occupants, such as children, by requiring the air bag to be automatically turned OFF.

The occupant classification sensors (weight sensors) are on the seat cushion frame under the front passenger seat and are designed to detect an occupant and objects on the seat. For example, if a child is in the front passenger seat, the Advanced Air Bag System is designed to turn the passenger air bag OFF in accordance with the regulations. Also, if a child restraint of the type specified in the regulations is on the seat, the occupant classification sensors can detect it and cause the air bag to turn OFF.

Front passenger seat adult occupants who are properly seated and using the seat belt as outlined in this manual should not cause the passenger air bag to be automatically turned OFF. For small adults it may be turned OFF, however, if the occupant does not sit in the seat properly (for example, by not sitting upright, by sitting on an edge of the seat, or by otherwise being out of position), this could cause the sensor to turn the air bag OFF. Always be sure to be seated and wearing the seat belt properly for the most effective protection by the seat belt and supplemental air bag.

INFINITI recommends that pre-teens and children be properly restrained in a rear seat. INFINITI also recommends that appropriate child restraints and booster seats be properly installed in a rear seat. If this is not possible, the occupant classification sensors are designed to operate as described above to turn the front passenger air bag OFF for specified child restraints. Failing to properly secure child restrains and to use the ALR mode may allow the restraint to tip or move in an accident or sudden stop. This can also result in the passenger air bag inflating in a crash instead of being OFF. (See “Child restraints” (P.1-22) for proper use and installation.)

If the front passenger seat is not occupied, the passenger air bag is designed not to inflate in a crash. However, heavy objects placed on the seat could result in air bag inflation, because of the object being detected by the occupant classification sensors. Other conditions could also result in air bag inflation, such as if a child is standing on the seat, or if two children are on the seat, contrary to the instructions in this manual. Always be sure that you and all vehicle occupants are seated and restrained properly.

Using the passenger air bag status light, you can monitor when the front passenger air bag is automatically turned OFF with the seat occupied. The light will not illuminate when the front passenger seat is unoccupied.

If an adult occupant is in the seat but the passenger air bag status light is illuminated (indicating that the air bag is OFF), it could be that the person is a small adult, or is not sitting on the seat properly.

If a child restraint must be used in the front seat, the passenger air bag status light

may or may not be illuminated, depending on the size of the child and the type of child restraint being used. If the passenger air bag status light is not illuminated (indicating that the air bag might inflate in a crash), it could be that the child restraint or seat belt is not being used properly. Make sure that the child restraint is installed properly, the seat belt is used properly and the occupant is positioned properly. If the passenger air bag status light is still not illuminated, reposition the occupant or child restraint in a rear seat.

If the passenger air bag status light will not illuminate even though you believe that the child restraint, the seat belts and the occupant are properly positioned, the system may be sensing an unoccupied seat (in which case the air bag is OFF). Your INFINITI retailer can check that the system is OFF by using a special tool. However, until you have confirmed with your retailer that your air bag is working properly, reposition the occupant or child restraint in a rear seat.

The INFINITI Advanced Air Bag System and passenger air bag status light will take a few seconds to register a change in the passenger seat status. However, if the seat becomes unoccupied, the air bag status light will remain off.

If a malfunction occurs in the front passenger air bag system, the supplemental air bag warning light , located in the meter and gauges area will blink. Have the system checked by an INFINITI retailer.

Other supplemental front-impact air bag precautions

WARNING

- **Do not place any objects on the steering wheel pad or on the instrument panel. Also, do not place any objects between any occupant and the steering wheel or instrument panel. Such objects may become dangerous projectiles and cause injury if the front air bags inflate.**
- **Do not place objects with sharp edges on the seat. Also, do not place heavy objects on the seat that will leave permanent impressions in the seat. Such objects can damage the seat or occupant classification sensors (weight sensors). This can affect the operation of the air bag system and result in serious personal injury.**
- **Do not use water or acidic cleaners (hot steam cleaners) on the seat. This can damage the seat or occupant classification sensors. This can also affect the operation of the air bag system and result in serious personal injury.**
- **Immediately after inflation, several front air bag system components will be hot. Do not touch them; you may severely burn yourself.**
- **No unauthorized changes should be made to any components or wiring of the supplemental air bag system. This is to prevent accidental inflation of the supplemental air bag or damage to the supplemental air bag system.**
- **Do not make unauthorized changes to your vehicle's electrical system, suspension system or front end structure. This could affect proper operation of the front air bag system.**
- **Tampering with the air bag system may result in serious personal injury. Tampering includes changes to the steering wheel and the instrument panel assembly by placing material over the steering wheel pad and above the instrument panel or by installing additional trim**

material around the air bag system.

- **Removing or modifying the front passenger seat may affect the function of the air bag system and result in serious personal injury.**
- **Modifying or tampering with the front passenger seat may result in serious personal injury. For example, do not change the front seats by placing material on the seat cushion or by installing additional trim material, such as seat covers, on the seat that is not specifically designed to assure proper air bag operation. Additionally, do not stow any objects under the front passenger seat or the seat cushion and seatback. Such objects may interfere with the proper operation of the occupant classification sensors.**
- **No unauthorized changes should be made to any components or wiring of the seat belt system. This may affect the front air bag system. Tampering with the seat belt system may result in serious personal injury.**
- **Work on and around the front air bag system should be done by an INFINITI retailer. Installation of electrical equipment should also be done by an INFINITI retailer. The Supplemental Restraint System (SRS) wiring harnesses* should not be modified or disconnected. Unauthorized electrical test equipment and probing devices should not be used on the air bag system.**
- **A cracked windshield should be replaced immediately by a qualified repair facility. A cracked windshield could affect the function of the supplemental air bag system.**

* **The SRS wiring harness connectors are yellow and orange for easy identification.**

When selling your vehicle, we request that you inform the buyer about the front air bag system and guide the buyer to the appropriate sections in this Owner's Manual.

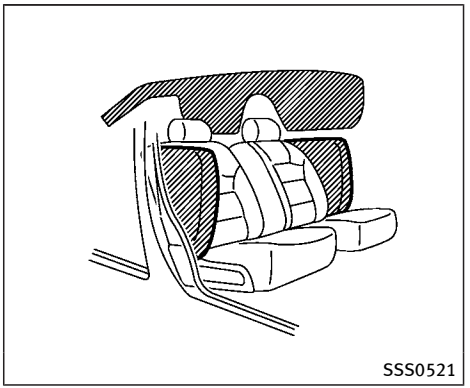

FRONT SEAT-MOUNTED SIDE-IMPACT SUPPLEMENTAL AIR BAG AND ROOF-MOUNTED CURTAIN SIDE-IMPACT AND ROLLOVER SUPPLEMENTAL AIR BAG SYSTEMS

The side air bags are located in the outside of the seatback of the front seats. The curtain air bags are located in the side roof rails. **All of the information, cautions and warnings in this manual apply and must be followed.** The side air bags and curtain air bags are designed to inflate in higher severity side collisions, although they may inflate if the forces in another type of

collision are similar to those of a higher severity side impact. They are designed to inflate on the side where the vehicle is impacted. They may not inflate in certain side collisions on the side where the vehicle is impacted. Curtain air bags are also designed to inflate in certain types of rollover collisions or near rollovers.

Vehicle damage (or lack of it) is not always an indication of proper side air bag and curtain air bag operation.

When the side air bags and curtain air bags inflate, a fairly loud noise may be heard, followed by release of smoke. This smoke is not harmful and does not indicate a fire. Care should be taken not to inhale it, as it may cause irritation and choking. Those with a history of a breathing condition should get fresh air promptly.

Side air bags, along with the use of seat belts, help to cushion the impact force on the chest and pelvic area of the front occupants. Curtain air bags help to cushion the impact force to the head of occupants in the front and rear outboard seating positions. They can help save lives and reduce serious injuries. However, side air bags and curtain air bags may cause abrasions or other injuries. Side air bags and curtain air bags do not provide restraint to the lower body.

The seat belts should be correctly worn and the driver and passenger seated upright as far as practical away from the side air bags. Rear seat passengers should be seated as far away as practical from the door finishers and side roof rails. The side air bags and curtain air bags inflate quickly in order to help protect the occupants. Because of this, the force of the side air bags and curtain air bags inflating can increase the risk of injury if the occupant is too close to, or is against, these air bag modules during inflation. In a rollover, the curtain air bags on both sides are designed to inflate. Under both side-impact and rollover situations, the curtain air bags will remain inflated for a short period of time.

The side air bags and curtain air bags operate only when the ignition switch is in the ON position.

After pushing the ignition switch to the ON position, the supplemental air bag warning light illuminates. The air bag warning light will turn off after about 7 seconds if the systems are operational.

WARNING

- **Do not place any objects near the seatback of the front seats. Also, do not place any objects (an umbrella, bag, etc.) between the front door finisher and the front seat. Such objects may become dangerous projectiles and cause injury if a side air bag inflates.**
- **Right after inflation, several side air bag and curtain air bag system components will be hot. Do not touch them; you may severely burn yourself.**
- **No unauthorized changes should be made to any components or wiring of the side air bag and curtain air bags. This is to prevent damage to or accidental inflation of the side air bag and curtain air bag systems.**
- **Do not make unauthorized changes to your vehicle's electrical system, suspension system or side panel. This could affect proper operation of the side air bag and curtain air bag systems.**
- **Tampering with the side air bag system may result in serious personal injury. For example, do not change the front seat by placing material near the seatback or by**

installing additional trim material, such as seat covers, around the side air bag.

- **Work around and on the side air bag and curtain air bag systems should be done by an INFINITI retailer. Installation of electrical equipment should also be done by an INFINITI retailer. The Supplemental Restraint System (SRS) wiring harnesses* should not be modified or disconnected. Unauthorized electrical test equipment and probing devices should not be used on the side air bag or curtain air bag systems.**

* **The SRS wiring harness connectors are yellow and orange for easy identification.**

When selling your vehicle, we request that you inform the buyer about the side air bag and curtain air bag systems and guide the buyer to the appropriate sections in this Owner's Manual.

SEAT BELTS WITH PRETENSIONERS (front seats)

WARNING

- **The pretensioners cannot be reused after activation. They must be replaced together with the retractor and buckle as a unit.**
- **If the vehicle becomes involved in a collision but a pretensioner is not activated, be sure to have the pretensioner system checked and, if necessary, replaced by an INFINITI retailer.**
- **No unauthorized changes should be made to any components or wiring of the pretensioner system. This is to prevent damage to or accidental activation of the pretensioners. Tampering with the pretensioner system may result in serious personal injury.**
- **Work around and on the pretensioner system should be done by an INFINITI retailer. Installation of electrical equipment should also be done by an INFINITI retailer. Unauthorized electrical test equipment and probing devices should not be used on the pretensioner system.**
- **If you need to dispose of a pretensioner or scrap the vehicle, contact an INFINITI retailer. Correct pretensioner disposal procedures are set forth in the appropriate INFINITI Service Manual. Incorrect disposal procedures could cause personal injury.**

The pretensioner system may activate with the supplemental air bag system in certain types of collisions. Working with the seat belt retractor, it helps tighten the seat belt when the vehicle becomes involved in certain types of collisions, helping to restrain front seat occupants.

The pretensioner is encased with the seat belt retractor. These seat belts are used the same way as conventional seat belts.

When a pretensioner activates, smoke is released and a loud noise may be heard. The smoke is not harmful, and it does not indicate a fire. Care should be taken not to inhale it as it may cause irritation and choking. Those with a history of a breathing condition should get fresh air promptly.

After pretensioner activation, load limiters allow the seat belt to release webbing (if necessary) to reduce forces against the chest.

The supplemental air bag warning light is used to indicate malfunctions in the pretensioner system. (See “Supplemental air bag warning light” (P.1-55) for more details.) If the operation of the supplemental air bag warning light indicates there is a malfunction, have the system checked by an INFINITI retailer.

When selling your vehicle, we request that you inform the buyer about the pretensioner system and guide the buyer to the appropriate sections in this Owner’s Manual.

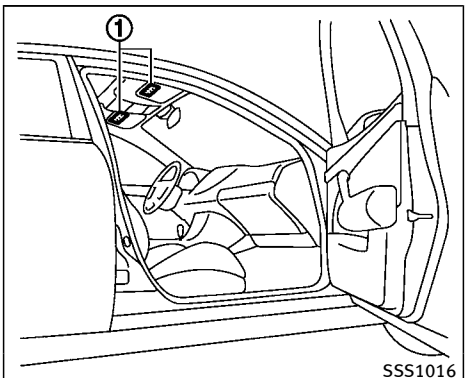

SUPPLEMENTAL AIR BAG WARNING LABELS

Warning labels about the supplemental front-impact air bag system are placed in the vehicle as shown in the illustration.

SRS air bag

The warning labels ① are located on the surface of the sun visors.

SUPPLEMENTAL AIR BAG WARNING LIGHT

The supplemental air bag warning light, displaying in the instrument panel, monitors the circuits for the air bag systems, pretensioners and all related wiring.

When the ignition switch is in the ON position, the supplemental air bag warning light illuminates for about 7 seconds and then turns off. This means the system is operational.

If any of the following conditions occur, the air bag and/or pretensioner systems need

servicing:

- The supplemental air bag warning light remains on after approximately 7 seconds.
- The supplemental air bag warning light flashes intermittently.
- The supplemental air bag warning light does not come on at all.

Under these conditions, the air bags and/or pretensioner systems may not operate properly. They must be checked and repaired. Take your vehicle to the nearest INFINITI retailer.

WARNING

If the supplemental air bag warning light is on, it could mean that the front air bag, side air bag, curtain air bag and/or pretensioner systems will not operate in an accident. To help avoid injury to yourself or others, have your vehicle checked by a retailer as soon as possible.

REPAIR AND REPLACEMENT PROCEDURE

The front air bags, side air bags, curtain air bags and pretensioners are designed to activate on a one-time-only basis. As a reminder, unless it is damaged, the supplemental air bag warning light will remain illuminated after inflation has occurred. Repair and replacement of these systems should be done only by an INFINITI retailer.

When maintenance work is required on the vehicle, the front air bags, side air bags, curtain air bags, pretensioners and related parts should be pointed out to the person conducting the maintenance. The ignition switch should always be in the LOCK position when working under the hood or inside the vehicle.

WARNING

- **Once a front air bag, side air bag or curtain air bag has inflated, the air bag module will not function again and must be replaced. Additionally, the activated pretensioners must also be replaced. The air bag module and pretensioner should be replaced by an INFINITI retailer. The air bag module and pretensioner system cannot be repaired.**
- **The front air bag, side air bag, curtain air bag and the pretensioner should be inspected by an INFINITI retailer if there is any damage to the front end or side portion of the vehicle.**
- **If you need to dispose of a supplemental air bag or pretensioner or scrap the vehicle, contact an INFINITI retailer. Correct supplemental air bag and pretensioner system disposal procedures are set forth in the appropriate INFINITI Service Manual. Incorrect disposal procedures could cause personal injury.**

2 Instruments and controls

Cockpit 2-3
Instrument panel 2-5
Meters and gauges 2-6
Speedometer and odometer 2-7
Tachometer 2-8
Engine coolant temperature gauge 2-8
Fuel gauge 2-9
Meter/ring illumination and needle sweep 2-9
Compass (if so equipped) 2-10
Zone variation change procedure 2-11
Warning/indicator lights and audible reminders 2-13
Checking bulbs 2-13
Warning lights 2-13
Indicator lights 2-19
Audible reminders 2-21
Vehicle information display 2-22
Indicators for operation 2-25
Indicators for maintenance 2-27
Trip computer 2-29
Security systems 2-31
Vehicle security system 2-32
INFINITI vehicle immobilizer system 2-33
Windshield wiper and washer switch 2-34
Windshield wiper and washer operation 2-35
Rain-sensing auto wiper system (if so equipped) 2-36
Rear window wiper and washer operation 2-37
Rear window and outside mirror defroster switch 2-38
Headlight and turn signal switch 2-38
Xenon headlights 2-38
Headlight switch 2-39
Turn signal switch 2-44
Fog light switch 2-44
Horn 2-44
Heated Seats (if so equipped) 2-45
Climate controlled seats (if so equipped) 2-46
Warning systems switch (if so equipped) 2-47
Snow mode switch 2-48
Intelligent Brake Assist (IBA) off switch (if so equipped) 2-48
Vehicle Dynamic Control (VDC) off switch 2-49
Clock 2-49
Adjusting the time 2-49
Power outlet 2-50

Storage 2-51
Cup holders 2-51
Sunglasses holder 2-52
Glove box..... 2-53
Console box 2-53
Card holder..... 2-54
Coat hooks..... 2-54
Cargo hooks (if so equipped) 2-55
Cargo net (if so equipped)..... 2-55
Cargo cover (if so equipped) 2-56
Roof rack (if so equipped) 2-58
Windows 2-59
Power windows 2-59
Moonroof 2-61
Power moonroof..... 2-62
Welcome light 2-63
Battery saver system..... 2-63
Interior lights..... 2-64
Map lights..... 2-64
Personal lights 2-64
Interior light control switch..... 2-64
Vanity mirror lights 2-65
Cargo light..... 2-66
HomeLink® Universal Transceiver..... 2-66
Programming HomeLink® 2-67
Programming HomeLink® for Canadian customers and gate openers..... 2-68
Operating the HomeLink® Universal Transceiver..... 2-69
Programming troubleshooting 2-69
Clearing the programmed information 2-69
Reprogramming a single HomeLink® button..... 2-69
If your vehicle is stolen 2-70

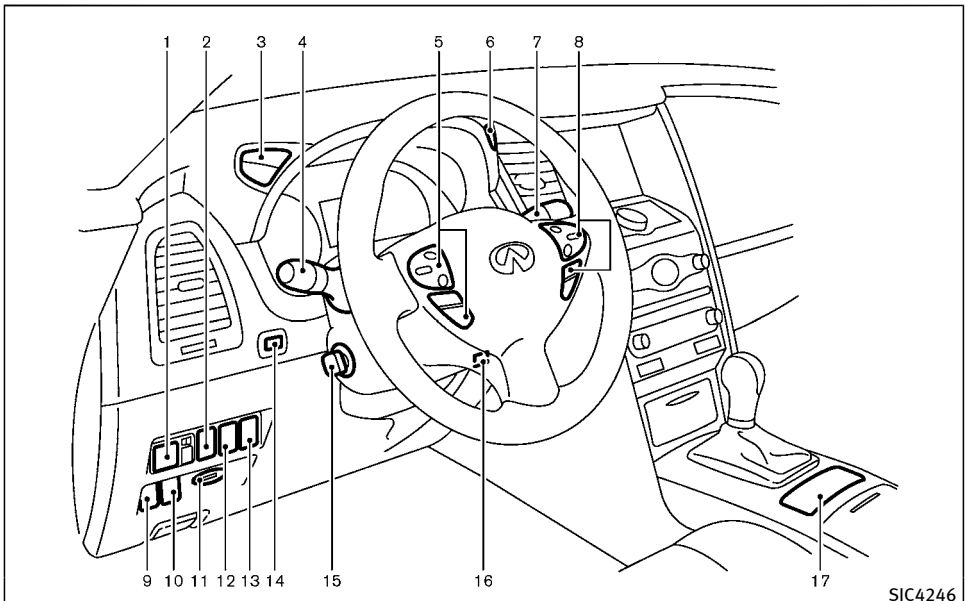

1. Outside mirror remote control switch
2. Intelligent Brake Assist (IBA) off switch (if so equipped)
3. Instrument brightness control switch
4. Headlight, fog light and turn signal switch
5. Steering-wheel-mounted controls (left side)
   — For audio system
   — For Bluetooth® Hands-Free Phone System (with navigation system)
   — For Bluetooth® Hands-Free Phone System (without navigation system)
   — For INFINITI Voice Recognition System (with navigation system)
6. Trip computer switch
7. Windshield wiper and washer switch
8. Steering-wheel-mounted controls (right side)
   — Cruise control switches (if so equipped)
   — Intelligent Cruise Control (ICC) switches (if so equipped)
   — Dynamic Driver Assistance switch (if so equipped)
9. Warning systems switch (if so equipped)
   — Forward Collision Warning (FCW)
   — Lane Departure Warning (LDW)
9. Headlight aiming control (if so equipped)
10. Vehicle Dynamic Control (VDC) OFF switch
11. Intelligent Key port
12. Power lift gate switch
13. Power lift gate main switch
14. TRIP/RESET switch for twin trip odometer
15. Electric tilting/telescopic steering

wheel lever (if so equipped)

16. Manual tilting/telescopic steering wheel lever (if so equipped)
17. Center-console-mounted controls
    — Climate controlled seat switches or Seat heater switches
    — SNOW mode switch

INSTRUMENT PANEL

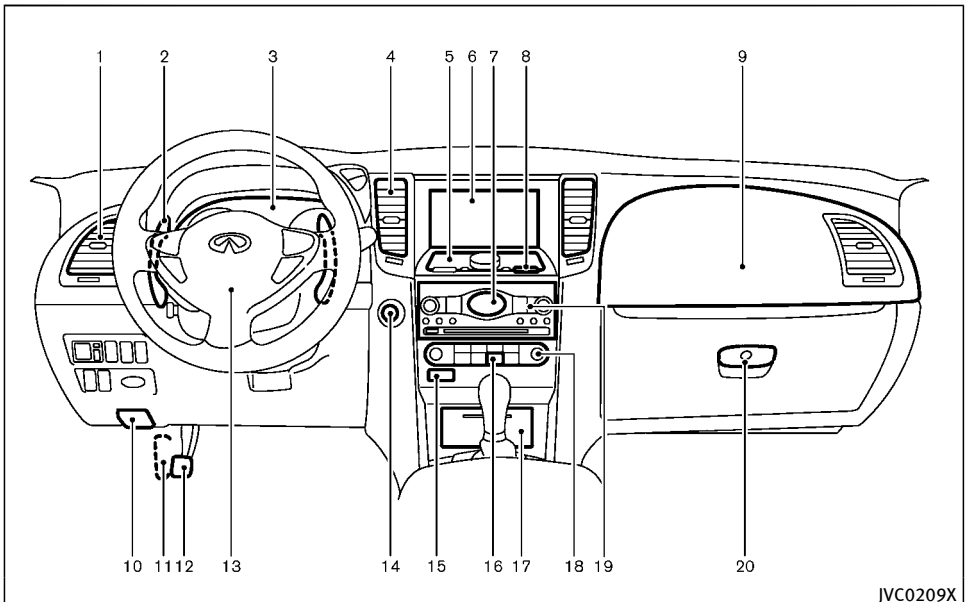

1. Side ventilator
2. Paddle shifter (if so equipped)
3. Meters and gauges
4. Center ventilator
5. Center multi-function control panel
   — Navigation system* (if so equipped)
   — Vehicle information and setting buttons
   — Around View Monitor (if so equipped)
6. Center display
7. Clock
8. Hazard warning flasher switch
9. Front passenger supplemental air bag
10. Hood release handle
11. Fuse box cover
12. Parking brake
13. Steering wheel
    — Horn
    — Driver supplement air bag
14. Push-button ignition switch
15. Front passenger air bag status light
16. Rear window defroster switch
17. Power outlet
18. Automatic climate control system
19. Audio system
20. Glove box lid release handle

*: Refer to the separate Navigation System Owner's Manual.

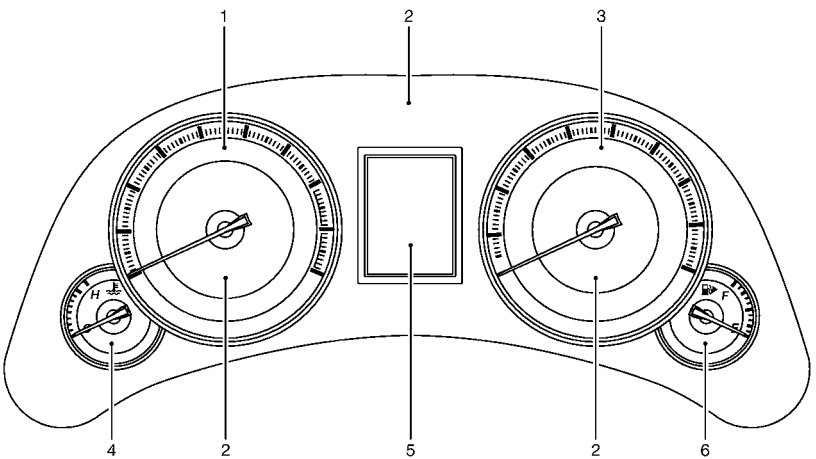

SIC3825

1. Tachometer
2. Warning/Indicator lights
3. Speedometer
4. Engine coolant temperature gauge
5. Vehicle information display/Odometer/twin trip odometer
6. Fuel gauge

The needle indicators in the speedometer, tachometer, engine coolant temperature gauge and fuel gauge may move slightly after the ignition switch is pushed to the OFF position. This is not a malfunction.

CAUTION

- **For cleaning, use a soft cloth, dampened with water. Never use a rough cloth, alcohol, benzine, thinner or any kind of solvent or paper towel with a chemical cleaning agent. They will scratch or cause discoloration to the lens.**
- **Do not spray any liquid such as water on the meter lens. Spraying liquid may cause the system to malfunction.**

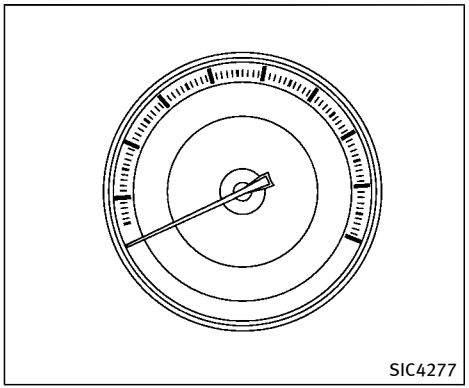

Speedometer

SPEEDOMETER AND ODOMETER

Speedometer

The speedometer indicates vehicle speed in miles per hour (MPH) and kilometers per hour (km/h).

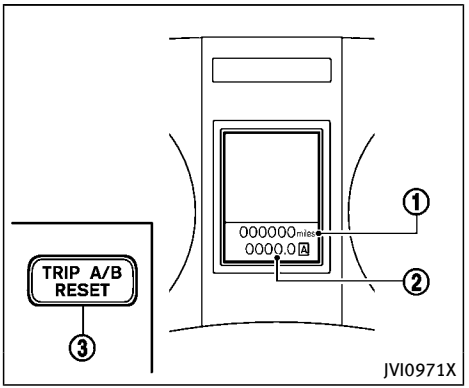

Odometer/twin trip odometer

Odometer/twin trip odometer

The odometer ① and twin trip odometer ② are displayed on the vehicle information display when the ignition switch is in the ON position.

The odometer records the total distance the vehicle has been driven.

The twin trip odometer records the distance of individual trips.

Changing the display:

Pushing the TRIP A/B RESET switch ③ at the bottom left of the combination meter panel changes the display as follows:

TRIP A → TRIP B → TRIP A

Resetting the trip odometer:

Pushing the TRIP A/B RESET switch ③ for more than 1 second resets the trip odometer to zero.

Average fuel economy and distance to empty information is also available. (See “Vehicle information display” (P.2-22) and “How to use STATUS button” (P.4-9).)

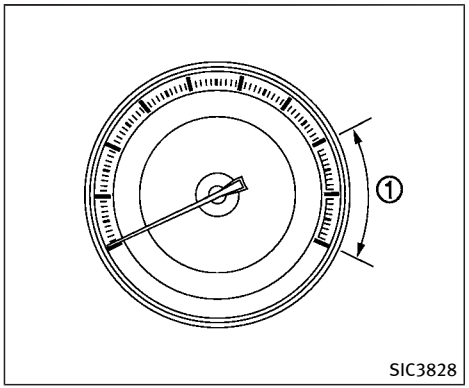

TACHOMETER

The tachometer indicates engine speed in revolutions per minute (RPM). **Do not rev the engine into the red zone ①.**

The red zone varies with each models.

CAUTION

When engine speed approaches the red zone, shift to a higher gear or reduce engine speed. Operating the engine in the red zone may cause serious engine damage.

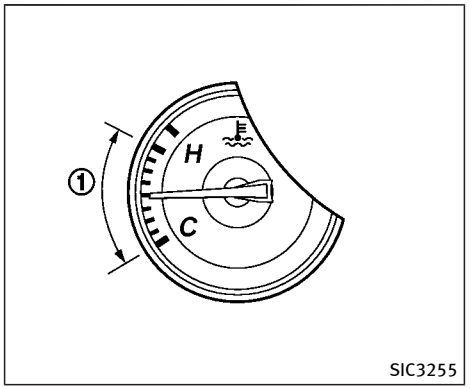

ENGINE COOLANT TEMPERATURE GAUGE

The gauge indicates the engine coolant temperature.

The engine coolant temperature is within the normal range when the gauge needle points within the zone ① shown in the illustration.

The engine coolant temperature varies with the outside air temperature and driving conditions.

CAUTION

If the gauge indicates engine coolant temperature near the hot (H) end of the normal range, reduce vehicle speed to decrease temperature. If gauge is over the normal range, stop the vehicle as soon as safely possible and let the engine idle. If the engine is overheated, continued operation of the vehicle may seriously damage the engine. See "If your vehicle overheats" (P.6-11) for immediate action required.

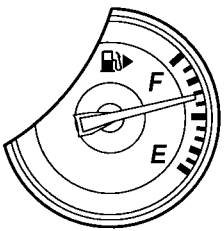

SIC3256

FUEL GAUGE

The gauge indicates the **approximate** fuel level in the tank.

The gauge may move slightly during braking, turning, acceleration, or going up or down hills.

The gauge needle returns to E (Empty) after the ignition switch is pushed to the OFF position.

Refill the fuel tank before the gauge registers "E" (Empty).

The low fuel warning appears on the vehicle information display when the fuel level in the tank is getting low. Refuel as soon as it is convenient, preferably before the gauge reaches "E". There will be a small reserve of fuel in the tank when the fuel gauge needle reaches "E".

The indicates that the fuel-filler door is located on the passenger's side of the vehicle.

CAUTION

- **If the vehicle runs out of fuel, the malfunction indicator light (MIL) may come on. Refuel as soon as possible. After a few driving trips, the light should turn off. If the light remains on after a few driving trips, have the vehicle inspected by an INFINITI retailer.**
- **For additional information, see "Malfunction Indicator Light (MIL)" (P.2-20).**

METER/RING ILLUMINATION AND NEEDLE SWEEP

The ring illumination surrounding meters and gauges illuminates when the driver's door is closed after getting into the vehicle with the Intelligent Key carried in.

When the engine is started, the indicator needles will sweep in the speedometer and tachometer and the ring illumination will be brightened gradually. This function can be turned off. (See "Trip computer" (P.2-29).)

COMPASS (if so equipped)

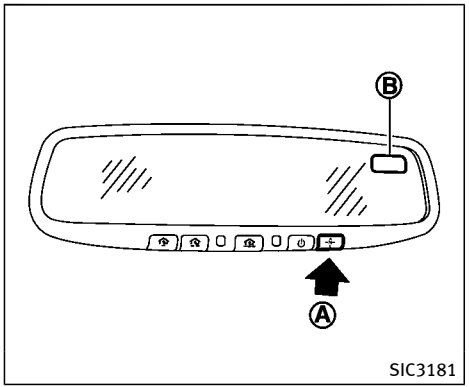

When the ignition switch is pushed to the ON position, the compass display Ⓑ will indicate the direction of the vehicle's heading.

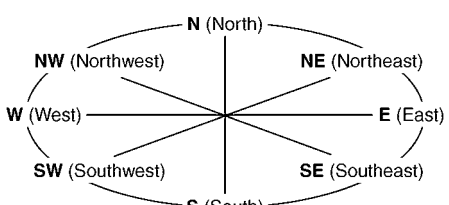

If the display reads "C", calibrate the compass by driving the vehicle in 3 complete circles at less than 5 MPH (8 km/h). You can also calibrate the compass by driving your vehicle on your everyday route. The compass will be calibrated once it has tracked 3 complete circles.

To turn on and off the compass manually, push the -N- switch Ⓐ while the ignition switch is in the ON position.

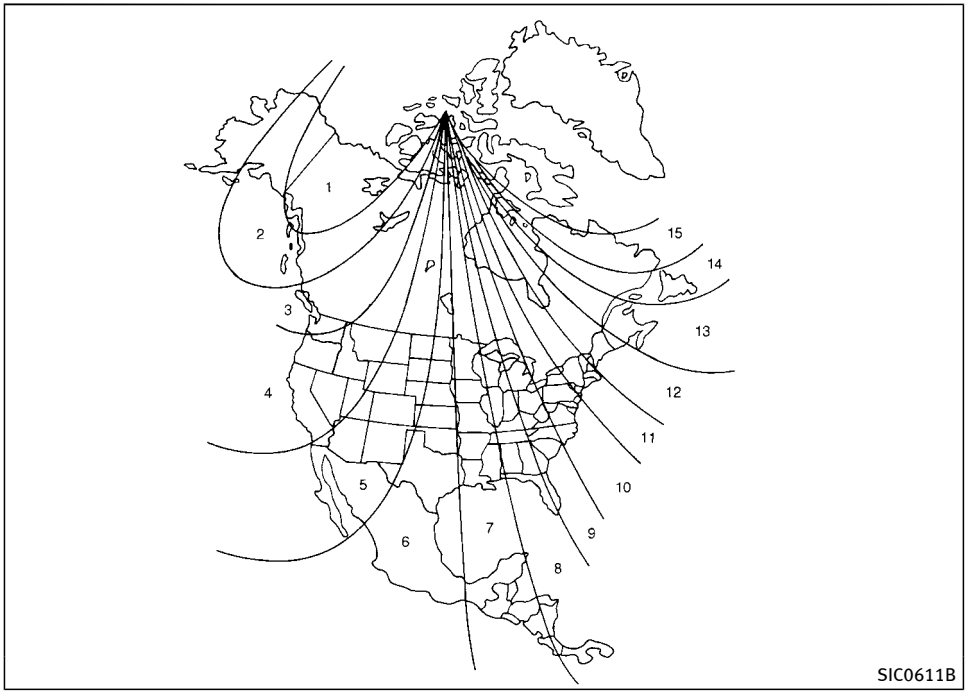

Zone map

ZONE VARIATION CHANGE PROCEDURE

The difference between magnetic north and geographical north is known as variance. In some areas, this difference can sometimes be great enough to cause false compass readings. Follow these instructions to set the variance for your particular location if this happens:

1. Push the -N- switch for more than 3 seconds. The current zone number will appear in the display.
2. Find your current location and variance number on the zone map.

   NOTE:
   Use zone number 5 for Hawaii.
3. Push the -N- switch repeatedly until the new zone number appears in the display, then release the switch. After you release the switch, the display will show a compass direction within a few seconds.
   - If the compass deviates from the correct indication soon after repeated adjustment, have the compass checked at an INFINITI retailer.
   - The compass may not indicate the correct compass point in tunnels or

while driving up or down a steep hill.

(The compass returns to the correct compass point when the vehicle moves to an area where the geomagnetism is stabilized.)

CAUTION

- **Do not install a ski rack, antenna, etc., which are attached to the vehicle by means of a magnet. They affect the operation of the compass.**
- **When cleaning the mirror, use a paper towel or similar material dampened with glass cleaner. Do not spray glass cleaner directly on the mirror as it may cause the liquid cleaner to enter the mirror housing.**

AWD	All-Wheel Drive (AWD) warning light (AWD models)*	KEY	Intelligent Key warning light		Exterior light indicator
ABS	Anti-lock Braking System (ABS) warning light		Lane Departure Warning (LDW) indicator light (orange)*	PASSENGER AIR BAG OFF	Front passenger air bag status light
			Low tire pressure warning light		High beam indicator light
AT CHECK	Automatic transmission check warning light		Master warning light	IBA OFF	Intelligent Brake Assist (IBA) off indicator light*
BRAKE	Brake warning light	CRUISE	Preview Function warning light (orange)*		Lane Departure Warning (LDW) indicator light (green)*
			Seat belt warning light		Malfunction Indicator Light (MIL)
	Charge warning light		Supplemental air bag warning light		Security indicator light
CRUISE	Distance Control Assist (DCA) system warning light (orange)*		Vehicle Dynamic Control (VDC) warning light		Turn signal/hazard indicator lights
	Engine oil pressure warning light	AFS OFF	Adaptive Front lighting System (AFS) indicator light*	OFF	Vehicle Dynamic Control (VDC) off indicator light
CRUISE	Intelligent Cruise Control (ICC) system warning light (orange)*	P/M1	Automatic transmission position indicator light	*: if so equipped	

CHECKING BULBS

With all doors closed, apply the parking brake and push the ignition switch to the ON position without starting the engine. The following lights will come on (if so equipped):

, BRAKE or , , , , AWD, CRUISE, IBA OFF

The following lights come on briefly and then go off (if so equipped):

, ABS or , AT CHECK, , OFF, , KEY, , AFS OFF,

If any light does not come on, it may indicate a burned-out bulb or an open circuit in the electrical system. Have the system checked by an INFINITI retailer.

Some indicators and warnings are also displayed on the vehicle information display between the speedometer and tachometer. (See “Vehicle information display” (P.2-22).)

WARNING LIGHTS

AWD All-Wheel Drive (AWD) warning light (AWD models)

The AWD warning light comes on when the ignition switch is pushed to ON. It turns off soon after the engine is started.

If the AWD system malfunctions, or the

diameter of the front and the rear wheels are different, the warning light will either remain illuminated or blink. (See “All-Wheel Drive (AWD)” (P.5-76).)

CAUTION

- **If the warning light comes on while driving there may be a malfunction in the AWD system. Reduce the vehicle speed and have your vehicle checked by an INFINITI retailer as soon as possible.**
- **If the AWD warning light blinks on when you are driving:**
  - **— blinks rapidly (about twice a second):**

    Pull off the road in a safe area, and idle the engine. The driving mode will change to 2WD to prevent the AWD system from malfunctioning. If the warning light turns off, you can drive again.
  - **— blinks slowly (about once every 2 seconds):**

    Pull off the road in a safe area, and idle the engine. Check that all tire sizes are the same, tire pressure is correct and tires are not worn.
- **If the warning light is still on after the above operations, have your vehicle checked by an INFINITI retailer as soon as possible.**

ABS or (ABS) Anti-lock Braking System (ABS) warning light

When the ignition switch is in the ON position, the Anti-lock Braking System (ABS) warning light illuminates and then turns off. This indicates the ABS is operational.

If the ABS warning light illuminates while the engine is running, or while driving, it may indicate the ABS is not functioning properly. Have the system checked by an INFINITI retailer.

If an ABS malfunction occurs, the anti-lock function is turned off. The brake system then operates normally, but without anti-lock assistance. (See “Brake system” (P.5-79).)

AT CHECK Automatic transmission check warning light

When the ignition switch is pushed to the ON position, the light comes on for 2 seconds. If the light comes on at any other time, it may indicate the transmission is not functioning properly. Have your INFINITI retailer check and repair the transmission.

BRAKE or (!) Brake warning light

This light functions for both the parking brake and the foot brake systems.

Parking brake indicator:

When the ignition switch is in the ON position, the light comes on when the parking brake is applied.

Low brake fluid warning light:

When the ignition switch is in the ON position, the light warns of a low brake fluid level. If the light comes on while the engine is running with the parking brake not applied, stop the vehicle and perform the following:

1. Check the brake fluid level. If brake fluid is necessary, add fluid and have the system checked by your INFINITI retailer. (See “Brake fluid” (P.8-13).)
2. If the brake fluid level is correct, have the warning system checked by an INFINITI retailer.

Anti-lock Braking System (ABS) warning indicator:

When the parking brake is released and the brake fluid level is sufficient, if both the brake warning light and the Anti-lock Braking System (ABS) warning light illuminate, it may indicate the ABS is not functioning properly. Have the brake system checked, and if necessary repaired, by an INFINITI retailer promptly. (See "Anti-lock Braking System (ABS) warning light" (P.2-14).)

WARNING

- **Your brake system may not be working properly if the warning light is on. Driving could be dangerous. If you judge it to be safe, drive carefully to the nearest service station for repairs. Otherwise, have your vehicle towed because driving it could be dangerous.**
- **Pressing the brake pedal with the engine stopped and/or low brake fluid level may increase your stopping distance and braking will require greater pedal effort as well as pedal travel.**
- **If the brake fluid level is below the minimum or MIN mark on the brake fluid reservoir, do not drive until the brake system has been checked at an INFINITI retailer.**

Charge warning light

If the light comes on while the engine is running, it may indicate the charging system is not functioning properly. Turn the engine off and check the alternator belt. If the belt is loose, broken, missing or if the light remains on, see an INFINITI retailer immediately.

CAUTION

Do not continue driving if the alternator belt is loose, broken or missing.

CRUISE Distance Control Assist (DCA) system warning light (orange; if so equipped)

This light comes on if there is a malfunction in the Distance Control Assist (DCA) system.

If the warning light illuminates, park the vehicle in a safe place. Turn the engine off, restart the engine, resume driving and turn on the DCA system again.

If it is not possible to turn on the system or the warning light stays on, it may indicate that the system is malfunctioning. Although the vehicle is still driveable under normal conditions, have the vehicle checked at an INFINITI retailer.

Engine oil pressure warning light

This light warns of low engine oil pressure. If the light flickers or comes on during normal driving, pull off the road in a safe area, stop the engine **immediately** and call an INFINITI retailer or other authorized repair shop.

The engine oil pressure warning light is not designed to indicate a low oil level. Use the dipstick to check the oil level. (See "Engine oil" (P.8-9).)

CAUTION

Running the engine with the engine oil pressure warning light on could cause

serious damage to the engine almost immediately. Such damage is not covered by warranty. Turn off the engine as soon as it is safe to do so.

CRUISE Intelligent Cruise Control (ICC) system warning light (orange; if so equipped)

This light comes on if there is a malfunction in the Intelligent Cruise Control (ICC) system.

If the warning light comes on, park the vehicle in a safe place. Turn the engine off, restart the engine, resume driving and set the ICC system again.

If it is not possible to set the system or the indicator stays on, it may indicate that the system is malfunctioning. Although the vehicle is still driveable under normal conditions, have the vehicle checked at an INFINITI retailer.

KEY Intelligent Key warning light

After the ignition switch is pushed to the ON position, this light comes on for about 2 seconds and then turns off.

This light warns of a malfunction with the Intelligent Key system.

If the light comes on while the engine is stopped, it may be impossible to start the engine. If the light comes on while the engine is running, you can drive the vehicle. However in these cases, contact an INFINITI retailer for repair as soon as possible.

Lane Departure Warning (LDW) indicator light (orange; if so equipped)

When the ignition switch is pushed to the ON position, the light will come on in orange, turn green, and then turn off. This indicates that the Lane Departure Warning (LDW) and Lane Departure Prevention (LDP) systems are operational.

While the LDW and/or LDP system is on, the light will blink in orange and a warning chime will sound if the vehicle is traveling close to either the left or the right of a traveling lane with detectable lane markers.

If the light comes on in orange and remains on, it may indicate that the LDW and LDP systems are not functioning properly. Although the vehicle is still driveable, have the systems checked by an INFINITI retailer.

See “Lane Departure Warning (LDW) system/Lane Departure Prevention (LDP) system” (P.5-21).

Low tire pressure warning light

Your vehicle is equipped with a Tire Pressure Monitoring System (TPMS) that monitors the tire pressure of all tires except the spare.

The low tire pressure warning light warns of low tire pressure or indicates that the TPMS is not functioning properly.

After the ignition switch is pushed ON, this light illuminates for about 1 second and turns off.

Low tire pressure warning:

If the vehicle is being driven with low tire pressure, the warning light will illuminate. A CHECK TIRE PRESSURE warning also appears on the vehicle information display. If you select the tire pressure information in the display, the LOW PRESSURE information will be displayed. The tire pressure for each tire will also be displayed.

When the low tire pressure warning light illuminates, you should stop and adjust the tire pressure to the recommended COLD tire pressure shown on the Tire and Loading Information label. The low tire pressure warning light does not automatically turn off when the tire pressure is adjusted. After the tire is inflated to the recommended pressure, the vehicle must be driven at speeds above 16 MPH (25 km/h) to activate the TPMS and turn off the low tire pressure warning light. Use a tire pressure gauge to check the tire pressure.

The CHECK TIRE PRESSURE warning appears each time the ignition switch is placed in the ON position as long as the low tire pressure warning light remains illuminated.

For additional information, see “Tire Pressure Monitoring System (TPMS)” (P.5-4) and “Tire Pressure Monitoring System (TPMS)” (P.6-3). For the CHECK TIRE PRESSURE warning, see “Vehicle information display” (P.2-22).

TPMS malfunction:

If the TPMS is not functioning properly, the low tire pressure warning light will flash for approximately 1 minute when the ignition switch is pushed ON. The light will remain on after 1 minute. Have the system checked by an INFINITI retailer. The CHECK TIRE PRESSURE warning does not appear if the low tire pressure warning light illuminates to indicate a TPMS malfunction.

For additional information, see “Tire Pressure Monitoring System (TPMS)” (P.5-4).

WARNING

- **If the light does not illuminate with the ignition switch pushed ON, have the vehicle checked by an INFINITI retailer as soon as possible.**
- **If the light illuminates or LOW PRESSURE information is displayed on the monitor screen while driving, avoid sudden steering maneuvers or abrupt braking, reduce vehicle speed, pull off the road to a safe location and stop the vehicle as soon as possible. Driving with underinflated tires may permanently damage the tires and increase the likelihood of tire failure. Serious vehicle damage could occur and may lead to an accident and could result in serious personal injury. Check the tire pressure for all four tires. Adjust the tire pressure to the recommended COLD tire pressure shown on the Tire and Loading Information label to turn the low tire pressure warning light OFF. If the light still illuminates while driving after adjusting the tire pressure, a tire may be flat. If you have a flat tire, replace it with a spare tire as soon as possible.**
- **When a spare tire is mounted or a wheel is replaced, the TPMS will not function and the low tire pressure warning light will flash for approximately 1 minute. The light will remain on after 1 minute. Contact your INFINITI retailer as soon as possible for tire replacement and/or system resetting.**
- **Replacing tires with those not originally specified by INFINITI could affect the proper operation of the TPMS.**

CAUTION

- **The TPMS is not a substitute for the regular tire pressure check. Be sure to check the tire pressure regularly.**
- **If the vehicle is being driven at speeds of less than 16 MPH (25 km/h), the TPMS may not operate correctly.**

- **Be sure to install the specified size of tires to the four wheels correctly.**

Master warning light

When the ignition switch is in the ON position, the master warning light illuminates if any of the following are displayed on the vehicle information display:

- No key warning
- Low fuel warning
- Low washer fluid warning
- Parking brake release warning
- Door/lift gate open warning
- Loose fuel cap warning
- Check tire pressure warning

See “Vehicle information display” (P.2-22).

CRUISE Preview Function warning light (orange; if so equipped)

The light comes on if there is a malfunction in the Brake Assist (with Preview Function) system.

If the warning light comes on, park the vehicle in a safe place. Turn the engine off, restart the engine, then resume driving.

If it is not possible to set the ICC system or the Preview Function warning light remains on, it may indicate that the system is malfunctioning. Although the vehicle is still driveable under normal conditions, have the vehicle checked at an INFINITI retailer.

Seat belt warning light and chime

The light and chime remind you to fasten seat belts. The light illuminates whenever the ignition switch is pushed to the ON position, and will remain illuminated until the driver’s seat belt is fastened. At the same time, the chime will sound for about 6 seconds unless the driver’s seat belt is securely fastened.

The seat belt warning light for the front passenger will illuminate if the seat belt is not fastened when the front passenger’s seat is occupied. For about 5 seconds after the ignition switch is in the ON position, the system does not activate the warning light for the front passenger.

See “Seat belts” (P.1-12) for precautions on seat belt usage.

Supplemental air bag warning light

After pushing the ignition switch to the ON position, the supplemental air bag warning light will illuminate. The supplemental air bag warning light will turn off after about 7 seconds if the front-impact air bag and side air bag, curtain air bag systems and/or pretensioner seat belt are operational.

If any of the following conditions occur, the front air bag, side air bag, curtain air bag and pretensioner systems needs servicing and your vehicle must be taken to your nearest INFINITI retailer.

- The supplemental air bag warning light remains on after approximately 7 seconds.
- The supplemental air bag warning light flashes intermittently.
- The supplemental air bag warning light does not come on at all.

Unless checked and repaired, the supplemental restraint system (air bag system) and/or the pretensioners may not function properly.

For additional information, see “Supplemental restraint system” (P.1-42).

WARNING

If the supplemental air bag warning light is on, it could mean that the front air bag, side air bag, curtain air bag systems and/or pretensioner systems will not operate in an accident. To help avoid injury to yourself or others, have your vehicle checked by a retailer as soon as possible.

Vehicle Dynamic Control (VDC) warning light

The light will blink when the VDC system or the traction control system is operating, thus alerting the driver that the vehicle is nearing its traction limits. The road surface may be slippery.

When the vehicle dynamic control warning light illuminates when the vehicle dynamic control system is turned on, this light alerts the driver to the fact that the vehicle dynamic control system's fail-safe mode is operating, for example the vehicle dynamic control system may not be functioning properly. Have the system checked by an INFINITI retailer. If a malfunction occurs in the system, the vehicle dynamic control system function will be canceled but the vehicle is still driveable. For additional information, see "Vehicle Dynamic Control (VDC) system" (P.5-84).

INDICATOR LIGHTS

AFS OFF Adaptive Front lighting System (AFS) indicator light (if so equipped)

When the ignition switch is pushed to the ON position, the Adaptive Front lighting System (AFS) indicator light will illuminate. The light will turn off in about 1 second if the AFS is operational.

If the AFS indicator light blinks, it may indicate the AFS is not functioning properly. Have the system checked by an INFINITI retailer.

See "Adaptive Front lighting System (AFS)" (P.2-42).

P/M1 Automatic transmission position indicator light

When the ignition switch is pushed to the "ON" position, the indicator shows the automatic shift position.

In the manual shift mode, when the transmission does not shift to the selected gear due to a transmission protection mode, the AT position indicator light will blink and a buzzer will sound.

See "Automatic transmission" (P.5-15) for further details.

Exterior light indicator

This indicator illuminates when the headlight switch is turned to the AUTO, ≡DC≡ or ≡D position and the front parking lights, instrument panel lights, tail lights, license plate lights or headlights are on. The indicator turns off when these lights are turned off.

PASSENGER AIR BAG OFF Front passenger air bag status light

The front passenger air bag status light (PASSENGER AIR BAG OFF) will be lit and the passenger front air bag will be OFF depending on how the front passenger seat is being used.

For front passenger air bag status light operation, see "INFINITI advanced air bag system (front seats)" (P.1-47) of this manual.

High beam indicator light

This light comes on when the headlight high beam is on and goes out when the low beam is selected.

Intelligent Brake Assist (IBA) off indicator light (if so equipped)

The light illuminates when the Intelligent Brake Assist (IBA) off switch is pushed to OFF. This indicates that the Intelligent Brake Assist (IBA) system is not operating.

When the IBA off indicator light illuminates while the system is turned on (without the warning chime sound), this light indicates that the system control is temporarily unavailable.

When the IBA off indicator light illuminates with the warning chime sound while the IBA system is turned on, this light indicates that the system may not be functioning properly. Park the vehicle in a safe place. Check to see if the laser sensor is clean. Turn the engine off, then restart the engine.

If the IBA off indicator light illuminates after following the procedures above, it may indicate that the system is malfunctioning. Although the vehicle is still driveable under normal conditions, have the vehicle checked at an INFINITI retailer. (See “Intelligent Brake Assist (IBA) system” (P.5-70).)

Lane Departure Warning (LDW) indicator light (green; if so equipped)

The light comes on in green when the Lane Departure Prevention (LDP) system is turned on. The light turns off when the system is turned off.

NOTE:

This light is common with the LDW indicator light (orange). (See “Lane Departure Warning (LDW) indicator light” (P.2-16).)

For more details, see “Lane Departure Warning (LDW) system/Lane Departure Prevention (LDP) system” (P.5-21).

Malfunction Indicator Light (MIL)

If the malfunction indicator light comes on steady or blinks while the engine is running, it may indicate a potential emission control malfunction.

The malfunction indicator light may also come on steady if the fuel-filler cap is loose or missing, or if the vehicle runs out of fuel. Check to make sure the fuel-filler cap is installed and closed tightly, and that the vehicle has at least 3 US gallons (14 liters) of fuel in the fuel tank.

After a few driving trips, the light should turn off if no other potential emission control system malfunction exists.

If this indicator light remains on for 20 seconds and then blinks for 10 seconds when the engine is not running, it indicates that the vehicle is not ready for an emission control system inspection/maintenance test. (See “Readiness for Inspection/Maintenance (I/M) test” (P.9-31).)

Operation:

The malfunction indicator light will come on in one of two ways:

- Malfunction indicator light on steady — An emission control system malfunction has been detected. Check the fuel-filler cap if the LOOSE FUEL CAP warning appears in the vehicle information display. If the fuel-filler cap is loose or

missing, tighten or install the cap and continue to drive the vehicle. The light should turn off after a few driving trips. If the light does not turn off after a few driving trips, have the vehicle inspected by an INFINITI retailer. You do not need to have your vehicle towed to the retailer.

- Malfunction indicator light blinking — An engine misfire has been detected which may damage the emission control system.

  To reduce or avoid emission control system damage:

  1) Do not drive at speeds above 45 MPH (72 km/h).
  2) Avoid hard acceleration or deceleration.
  3) Avoid steep uphill grades.
  4) If possible, reduce the amount of cargo being hauled or towed.

  The malfunction indicator light may stop blinking and remain on.

  Have the vehicle inspected by an INFINITI retailer. You do not need to have your vehicle towed to the retailer.

CAUTION

Continued vehicle operation without having the emission control system checked and repaired as necessary could lead to poor driveability, reduced fuel economy, and possible damage to the emission control system.

Security indicator light

The light blinks when the ignition switch is in the ACC, OFF and LOCK position. This function indicates the security system equipped on the vehicle is operational.

If the security system is malfunctioning, this light will remain on while the ignition switch is in the ON position. For additional information, see “Security systems” (P.2-31).

Turn signal/hazard indicator lights

The light flashes when the turn signal switch lever or hazard switch is turned on.

Vehicle Dynamic Control (VDC) off indicator light

The light comes on when the vehicle dynamic control off switch is pushed to OFF. This indicates that the vehicle dynamic control system and traction control system are not operating.

AUDIBLE REMINDERS

Key reminder chime

A chime will sound if the driver side door is opened while the ignition switch is pushed to the ACC position or pushed to the OFF or LOCK position with the Intelligent Key left in the Intelligent Key port. Make sure the ignition switch is pushed to the OFF position, and take the Intelligent Key with you when leaving the vehicle.

Light reminder chime

A chime will sound when the driver side door is opened with the light switch in the or position and the ignition switch in the ACC, OFF or LOCK position.

Turn the light switch off when you leave the vehicle.

Parking brake reminder chime

The chime will sound if the vehicle is driven at more than 4 MPH (7 km/h) with the parking brake applied. Stop the vehicle and release the parking brake.

Brake pad wear warning

The disc brake pads have audible wear warnings. When a brake pad requires replacement, it will make a high pitched scraping sound when the vehicle is in motion. This scraping sound will first occur only when the brake pedal is depressed. After more wear of the brake pad, the sound will always be heard even if the brake pedal is not depressed. Have the brakes checked as soon as possible if the warning sound is heard.

Lane departure warning chime (if so equipped)

When the Lane Departure Warning (LDW) or Lane Departure Prevention (LDP) system is on, the chime sounds if the vehicle is traveling close to either the left or the right of a traveling lane with detectable lane markers.

See “Lane Departure Warning (LDW) system/Lane Departure Prevention (LDP) system” (P.5-21) for more details.

VEHICLE INFORMATION DISPLAY

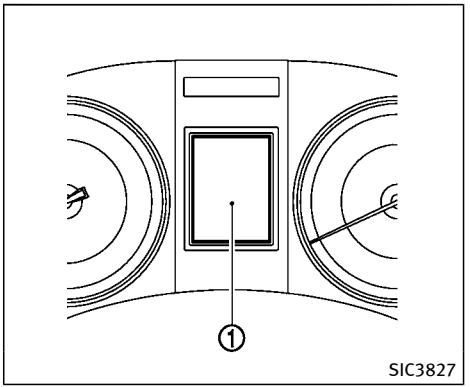

The vehicle information display ① is located between the tachometer and the speedometer, and it displays the automatic transmission position indicator, the Intelligent Cruise Control (ICC) system (if so equipped), the Distance Control Assist (DCA) system (if so equipped) information, the Intelligent Key operation information and other warnings and information.

For detailed information about each system, see the following sections:

- Automatic Transmission (AT)
  - “Warning/indicator lights and audible reminders” (P.2-13).

— “Driving the vehicle” (P.5-15).

- Intelligent Cruise Control (ICC) system
  — “Intelligent Cruise Control (ICC) system (FULL SPEED RANGE)” (P.5-32).
- Distance Control Assist (DCA) system
  — “Distance Control Assist (DCA) system” (P.5-55).
- Intelligent Key system
  — “Intelligent Key system” (P.3-6).
  — “Push-button ignition switch” (P.5-11).

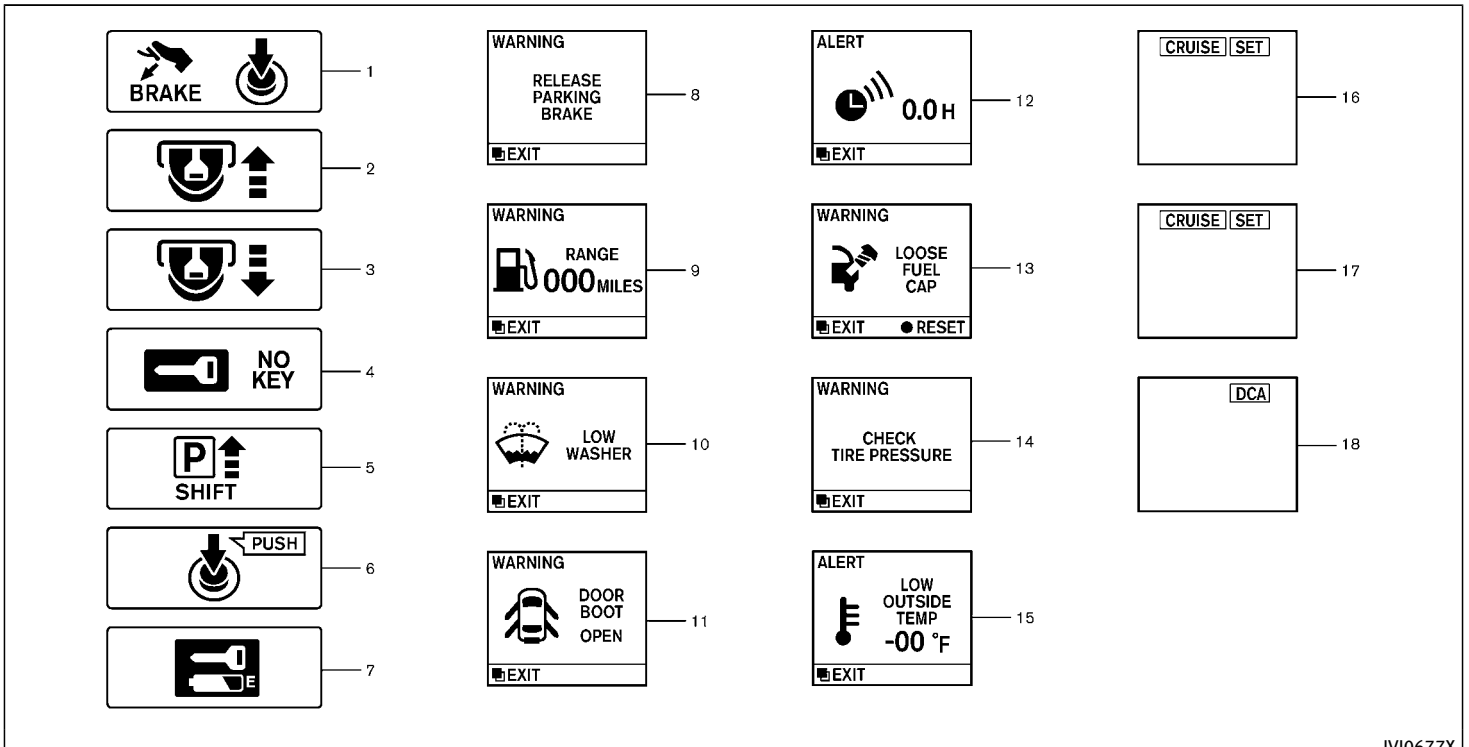
BRAKE
1
2
3
NO KEY
4
P
SHIFT
5
PUSH
6
E
7
WARNING
RELEASE PARKING BRAKE
EXIT
8
WARNING
RANGE
000 MILES
EXIT
9
WARNING
LOW WASHER
EXIT
10
WARNING
DOOR BOOT OPEN
EXIT
11
ALERT
0.0 H
EXIT
12
WARNING
LOOSE FUEL CAP
EXIT
RESET
13
WARNING
CHECK TIRE PRESSURE
EXIT
14
ALERT
LOW OUTSIDE TEMP
-00 °F
EXIT
15
CRUISE
SET
16
CRUISE
SET
17
DCA
18
JVI0677X

INDICATORS FOR OPERATION

1. Engine start operation indicator

This indicator appears when the shift lever is in the P (Park) position.

This indicator means that the engine will start by pushing the ignition switch with the brake pedal depressed.

2. Intelligent Key insertion indicator

This indicator appears when the Intelligent Key needs to be inserted into the Intelligent Key port. (For example, the Intelligent Key battery is discharged.)

If this indicator appears, insert the Intelligent Key into the Intelligent Key port in the correct direction. (See "Push-button ignition switch" (P.5-11).)

3. Intelligent Key removal indicator

This indicator appears when the driver's door is opened with the ignition switch in the ACC, OFF or LOCK position and the Intelligent Key placed in the Intelligent Key port. A key reminder chime also sounds.

If this indicator appears, remove the Intelligent Key from the Intelligent Key port and take it with you when leaving the vehicle.

4. NO KEY warning

This warning appears in either of the following conditions.

No Intelligent Key inside the vehicle:

The warning appears when the door is closed with the Intelligent Key left outside the vehicle and the ignition switch in the ACC or ON position. Make sure that the Intelligent Key is inside the vehicle.

Unregistered Intelligent Key:

The warning appears when the ignition switch is pushed from the LOCK position and the Intelligent Key cannot be recognized by the system. You cannot start the engine with an unregistered key. Use the registered Intelligent Key.

See "Intelligent Key system" (P.3-6) for more details.

5. SHIFT "P" warning

This warning appears when the ignition switch is pushed to stop the engine with the shift lever in any position except the P (Park) position.

If this warning appears, move the shift lever to the P (Park) position or push the ignition switch to the ON position.

An inside warning chime will also sound. (See "Intelligent Key system" (P.3-6).)

6. "PUSH" warning

This warning appears when the shift lever is moved to the P (Park) position with the ignition switch in the ACC position after the SHIFT "P" warning appears.

To push the ignition switch to the OFF position, perform the following procedure:

SHIFT "P" warning → (Move the shift lever to "P") → **PUSH warning** → (Push the ignition switch → ignition switch position is turned to ON) → **PUSH warning** → (Push the ignition switch → ignition switch position is turned to OFF)

7. Intelligent Key battery discharge indicator

This indicator appears when the Intelligent Key battery is running out of power.

If this indicator appears, replace the battery with a new one. (See "Intelligent Key battery replacement" (P.8-24).)

8. Parking brake release warning

This warning appears when the vehicle speed is above 4 MPH (7 km/h) and the parking brake is applied.

9. Low fuel warning

This warning appears when the fuel level in the tank is getting low. Refuel as soon as it is convenient, preferably before the fuel gauge reaches the empty (E) position.

There is a small reserve of fuel remaining in the tank when the fuel gauge reaches the empty (E) position.

10. Low washer fluid warning

This warning appears when the washer tank fluid is at a low level. Add washer fluid as necessary. (See “Window washer fluid” (P.8-14).)

11. Door/lift gate open warning (ignition switch is in the ON position)

This warning appears if any of the doors and/or the lift gate are open or not closed securely. The vehicle icon indicates which door or the lift gate is open on the display.

12. “Time to rest” indicator

This indicator appears when the set “time to rest” indicator activates. You can set the time for up to 6 hours. (See “Trip computer” (P.2-29).)

13. Loose fuel cap warning

This warning appears when the fuel-filler cap is not tightened correctly after the vehicle has been refueled. (See “Fuel-filler cap” (P.3-24).)

14. Check tire pressure warning

This warning appears when the low tire pressure warning light in the meter illuminates and low tire pressure is detected. The warning appears each time the ignition switch is placed in the ON position as long as the low tire pressure warning light remains illuminated. If this warning appears, stop the vehicle and adjust the tire pressure to the recommended COLD tire pressure shown on the Tire and Loading Information label. (See “Low tire pressure warning light” (P.2-16) and “Tire Pressure Monitoring System (TPMS)” (P.5-4).)

15. Low outside temperature warning

This warning appears if the outside temperature is below 37°F (3°C). The warning can be set not to be displayed. (See “Trip computer” (P.2-29).)

16. Cruise indicator (if so equipped)

Cruise main switch indicator:

The indicator is displayed when the cruise control main switch is pushed. When the main switch is pushed again, the indicator disappears. When the cruise control main switch indicator is displayed, the cruise control system is operational.

Cruise set switch indicator:

The indicator is displayed while the vehicle speed is controlled by the cruise control system. If the indicator blinks while the engine is running, it may indicate that the cruise control system is not functioning properly. Have the system checked by an INFINITI retailer.

See “Cruise control” (P.5-30) for details.

17. Intelligent Cruise Control (ICC) system MAIN switch indicator (if so equipped)

The indicator is displayed when the Intelligent Cruise Control (ICC) system main switch is pushed. When the main switch is pushed again, the indicator disappears. While the main switch indicator is displayed, the ICC system is operational. The cruise control set indicator (SET) is dis-

played while the vehicle is controlled by the conventional (fixed speed) cruise control mode of the ICC system. (See “Intelligent Cruise Control (ICC) system (FULL SPEED RANGE)” (P.5-32).)

18. Distance Control Assist (DCA) system switch indicator (if so equipped)

The indicator is displayed when the Distance Control Assist (DCA) system switch is pushed on. When the switch is pushed again, the indicator disappears. While the indicator is displayed, the DCA system is operational. (See “Distance Control Assist (DCA) system” (P.5-55).)

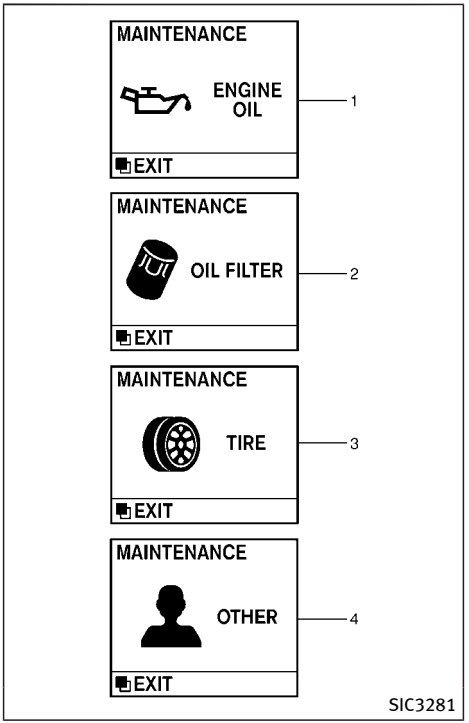

INDICATORS FOR MAINTENANCE

1. Engine oil replacement indicator

This indicator appears when the customer set time comes for changing the engine oil. You can set or reset the distance for changing the engine oil. (See “Trip computer” (P.2-29).)

2. Oil filter replacement indicator

This indicator appears when the customer set time comes for replacing the oil filter. You can set or reset the distance for replacing the oil filter. (See “Trip computer” (P.2-29).)

3. Tire replacement indicator

This indicator appears when the customer set distance comes for replacing tires. You can set or reset the distance for replacing tires. (See “Trip computer” (P.2-29).)

WARNING

The tire replacement indicator is not a substitute for regular tire checks, including tire pressure checks. See “Changing wheels and tires” (P.8-36). Many factors including tire inflation, alignment, driving habits and

road conditions affect tire wear and when tires should be replaced. Setting the tire replacement indicator for a certain driving distance does not mean your tires will last that long. Use the tire replacement indicator as a guide only and always perform regular tire checks. Failure to perform regular tire checks, including tire pressure checks could result in tire failure. Serious vehicle damage could occur and may lead to a collision, which could result in serious personal injury or death.

4. “OTHER” indicator

This indicator appears when the set time comes for replacing items other than the engine oil, oil filter and tires. You can set or reset the distance for replacing the items. (See “Trip computer” (P.2-29).)

More maintenance reminders are also available on the center display. (See “How to use INFO button” (P.4-9).)

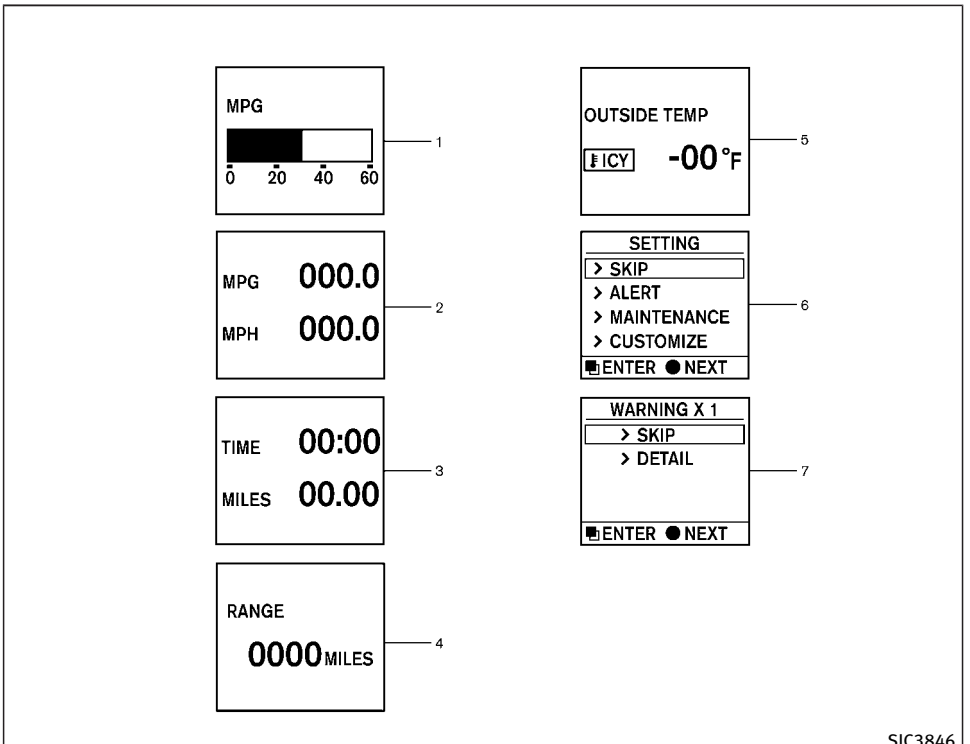

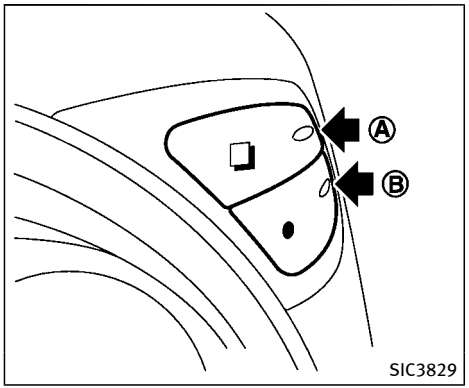

TRIP COMPUTER

Switches for the trip computer are located on the right side of the combination meter panel. To operate the trip computer, push the switches as shown above.

Ⓐ ❑ switch
Ⓑ ● switch

When the ignition switch is pushed to the ON position, modes of the trip computer can be selected by pushing the ❑ switch Ⓐ.

Each time the ❑ switch Ⓐ is pushed, the display will change as follows:

Current fuel consumption → Average fuel consumption and speed → Elapsed time and trip odometer → Distance to empty (dte) → Outside air temperature (ICY) → Setting → Warning check

1. Current fuel consumption

The current fuel consumption mode shows the current fuel consumption.

2. Average fuel consumption (MPG or l (liter)/100 km) and speed (MPH or km/h)

Fuel consumption:

The average fuel consumption mode shows the average fuel consumption since the last reset. Resetting is done by pushing the ● switch Ⓑ for longer than 1 second. (The average speed is also reset at the same time.)

The display is updated every 30 seconds. At about the first 1/3 mile (500 m) after a reset, the display shows "——".

Speed:

The average speed mode shows the average vehicle speed since the last reset. Resetting is done by pushing the ● switch Ⓑ for longer than 1 second. (The average fuel consumption is also reset at the same time.)

The display is updated every 30 seconds. The first 30 seconds after a reset, the display shows "——".

3. Elapsed time and trip odometer (mls or km)

Elapsed time:

The elapsed time mode shows the time since the last reset. The displayed time can be reset by pushing the ● switch Ⓑ for longer than 1 second. (The trip odometer is also reset at the same time.)

Trip odometer:

The trip odometer mode shows the total distance the vehicle has been driven since the last reset. Resetting is done by pushing the ● switch Ⓑ for longer than 1 second. (The elapsed time is also reset at the same time.)

4. Distance to empty (dte — mls or km)

The distance to empty (dte) mode provides you with an estimation of the distance that can be driven before refueling. The dte is constantly being calculated, based on the amount of fuel in the fuel tank and the

actual fuel consumption.

The display is updated every 30 seconds.

The dte mode includes a low range warning feature. If the fuel level is low, the warning is displayed on the screen.

When the fuel level drops even lower, the dte display will change to "——".

- If the amount of fuel added is small, the display just before the ignition switch is pushed to the OFF position may continue to be displayed.
- When driving uphill or rounding curves, the fuel in the tank shifts, which may momentarily change the display.

5. Outside air temperature (ICY — °F or °C)

The outside air temperature is displayed in °F or °C in the range of –22 to 131°F (–30 to 55°C).

The outside air temperature mode includes a low temperature warning feature. If the outside air temperature is below 37°F (3°C), the warning is displayed on the screen.

The outside temperature sensor is located in front of the radiator. The sensor may be affected by road or engine heat, wind directions and other driving conditions. The display may differ from the actual outside temperature or the temperature displayed on various signs or billboards.

6. Setting

Setting is available while the engine is running.

Setting cannot be made while driving. A message "Setting can only be operated when stopped" is also displayed on the vehicle information display.

The ❑ switch Ⓐ and ● switch Ⓑ are used in the setting mode to select and decide a menu.

SKIP:

Push the ❑ switch Ⓐ to move to the warning check mode.

Push the ● switch Ⓑ to select other menus.

ALERT:

There are 3 submenus under the alert menu.

- BACK
  Select this submenu to return to the top page of the setting mode.
- TIME TO REST
  Select this submenu to specify when the "TIME TO REST" indicator activates.
- ICY
  Select this submenu to display the low outside temperature warning.

MAINTENANCE:

There are 5 submenus under the maintenance menu.

- BACK
  Select this submenu to return to the top page of the setting mode.
- ENGINE OIL
  Select this submenu to set or reset the distance for changing the engine oil.
- OIL FILTER
  Select this submenu to set or reset the distance for replacing the oil filter.
- TIRE
  Select this submenu to set or reset the distance for replacing tires.
- OTHER
  Select this submenu and set or reset the distance for replacing items other than the engine oil, oil filter and tires.

CUSTOMIZE:

There are 4 submenus under the display menu.

- BACK
  Select this submenu to return to the top page of the setting mode.
- LANGUAGE
  Select this submenu to choose language for display.
- UNIT
  Select this submenu to choose the unit from MPG or l/100 km.
- METER EFFECT
  Select this submenu to turn on and off the meter/ring illumination and needle sweep function when starting the engine.

7. Warning check

SKIP:

Push the ❑ switch Ⓐ to move to the warning check mode.

Push the ● switch Ⓑ to select other menu.

DETAIL:

This item is available only when a warning is displayed.

Select this menu to see the details of warnings.

SECURITY SYSTEMS

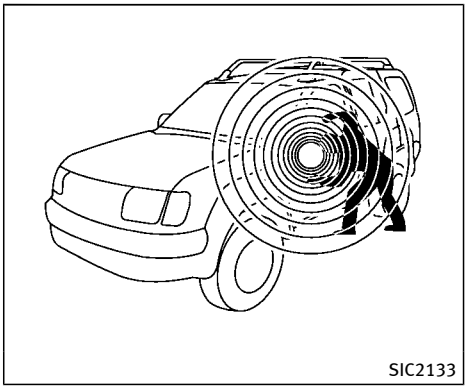

Your vehicle has two types of security systems, as follows:

- Vehicle security system
- INFINITI Vehicle Immobilizer System

The security condition will be shown by the security indicator light.

VEHICLE SECURITY SYSTEM

The vehicle security system provides visual and audio alarm signals if someone opens the doors, hood, or lift gate when the system is armed. It is not, however, a motion detection type system that activates when a vehicle is moved or when a vibration occurs.

The system helps deter vehicle theft but cannot prevent it, nor can it prevent the theft of interior or exterior vehicle components in all situations. Always secure your vehicle even if parking for a brief period. Never leave your Intelligent Key(s) in the vehicle, and always lock it when unattended. Be aware of your surroundings, and park in secure, well-lit areas whenever possible.

Many devices offering additional protection, such as component locks, identification markers, and tracking systems, are available at auto supply stores and specialty shops. Your INFINITI retailer may also offer such equipment. Check with your insurance company to see if you may be eligible for discounts for various theft protection features.

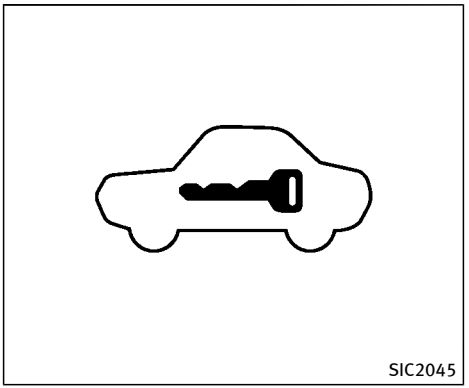

How to arm the vehicle security system

1. Close all windows.

   The system can be armed even if the windows are open.
2. Push the ignition switch to the OFF position.
3. Remove the Intelligent Key from the vehicle.
4. Close all doors, hood and lift gate. Lock all doors. The doors can be locked with the Intelligent Key, door handle request switch, power door lock switch or mechanical key.
5. Confirm that the security indicator light comes on. The security indicator light stays on for about 30 seconds. The vehicle security system is now pre-armed. After about 30 seconds the vehicle security system automatically shifts into the armed phase. The security light begins to flash once every approximately 3 seconds. If, during this 30-second pre-arm time period, the door is unlocked, or the ignition switch is pushed to ACC or ON, the system will not arm.

Even when the driver and/or passengers are in the vehicle, the system will activate with all doors, hood, and lift gate locked with the ignition switch in the LOCK position. When pushing the ignition switch to the ACC or ON position, the system will be released.

Vehicle security system activation

The vehicle security system will give the following alarm:

- The headlights blink and the horn sounds intermittently.
- The alarm automatically turns off after approximately 50 seconds. However, the alarm reactivates if the vehicle is

tampered with again.

The alarm is activated by:

- Unlocking the door or opening the lift gate without using the button on the Intelligent Key, the door handle request switch or the mechanical key. (Even if the door is opened by releasing the door inside lock knob, the alarm will activate.)
- Opening the hood.

How to stop an activated alarm

The alarm will stop when a door is unlocked by pushing the unlock button or power lift gate button on the Intelligent Key, the door handle request switch or using the mechanical key, or when the ignition switch is pushed to the ACC or ON position.

If the system does not operate as described above, have it checked by an INFINITI retailer.

INFINITI VEHICLE IMMOBILIZER SYSTEM

The INFINITI Vehicle Immobilizer System will not allow the engine to start without the use of the registered Intelligent Key. **Never leave these keys in the vehicle.**

FCC Notice:

For USA:

This device complies with Part 15 of the FCC Rules. Operation is subject to the following two conditions: (1) This device may not cause harmful interference, and (2) this device must accept any interference received, including interference that may cause undesired operation.

NOTE:

Changes or modifications not expressly approved by the party responsible for compliance could void the user's authority to operate the equipment.

For Canada:

This device complies with Industry Canada licence-exempt RSS standard(s). Operation is subject to the following two conditions: (1) this device may not cause interference, and (2) this device must accept any interference, including interference that may cause undesired operation of the device.

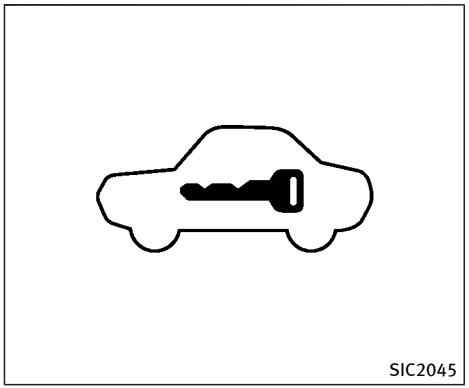

Security indicator light

The security indicator light is located on the meter panel. It indicates the status of the INFINITI Vehicle Immobilizer System.

The light blinks after the ignition switch was in the ACC, OFF and LOCK position. This function indicates the security systems equipped on the vehicle are operational.

If the INFINITI Vehicle Immobilizer System is malfunctioning, this light will remain on while the ignition switch is in the ON position.

If the light still remains on and/or the engine will not start, see an INFINITI retailer for INFINITI Vehicle Immobilizer System service as soon as possible. Please bring all Intelligent Keys that you have when visiting an INFINITI retailer for service.

WARNING

In freezing temperatures the washer solution may freeze on the window and obscure your vision which may lead to an accident. Warm the window with the defroster before you wash the window.

CAUTION

- **Do not operate the washer continuously for more than 30 seconds.**
- **Do not operate the washer if the reservoir tank is empty.**
- **Do not fill the window washer reservoir tank with washer fluid concentrates at full strength. Some methyl alcohol based washer fluid concentrates may permanently stain the grille if spilled while filling the window washer reservoir tank.**
- **Pre-mix washer fluid concentrates with water to the manufacturer's recommended levels before pouring the fluid into the window washer reservoir tank. Do not use the window washer reservoir**

tank to mix the washer fluid concentrate and water.

If the windshield wiper operation is interrupted by snow or ice, the wiper may stop moving to protect its motor. If this occurs, turn the wiper switch to the OFF position and remove the snow or ice that is on and around the wiper arms. In approximately 1 minute, turn the switch on again to operate the wiper.

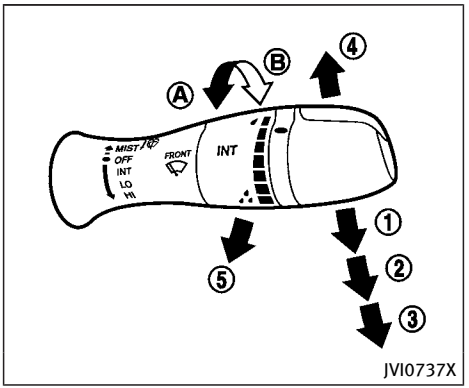

Type A

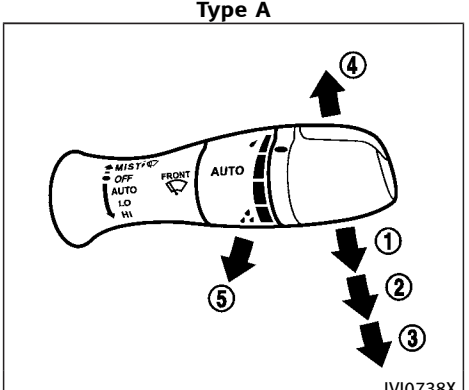

Type B

WINDSHIELD WIPER AND WASHER OPERATION

The windshield wiper and washer operates when the ignition switch is in the ON position.

Push the lever down to operate the wiper at the following speed:

① Intermittent — intermittent operation

The intermittent operation can be adjusted by turning the knob toward Ⓐ (Slower) or Ⓑ (Faster) (if so equipped).

When the speed sensing wiper interval function is turned on, the intermittent operation speed varies in accordance with the vehicle speed. (For example, when the vehicle speed is high, the intermittent operation speed will be faster.) To turn this function on and off, see “How to use SETTING button” (P.4-15).

For models with the rain-sensing auto wiper system, see “Rain-sensing auto wiper system” (P.2-36).

② Low — continuous low speed operation

③ High — continuous high speed operation

Push the lever up ④ to have one sweep operation of the wiper.

Pull the lever toward you ⑤ to operate the washer. Then the wiper will also operate several times.

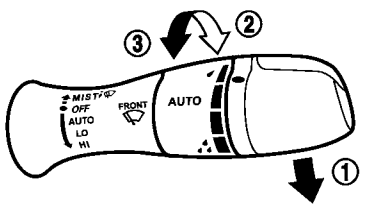

JVI0739X

RAIN-SENSING AUTO WIPER SYSTEM (if so equipped)

The rain-sensing auto wiper system can automatically turn on the wipers and adjust the wiper speed depending on the rainfall and the vehicle speed by using the rain sensor located on the upper part of the windshield.

To set the rain-sensing auto wiper system, push the lever down to the AUTO position ①. The wiper will sweep once while the ignition switch is in the ON position.

The rain sensor sensitivity level can be adjusted by turning the knob toward the front ② (High) or toward the rear ③ (Low).

- High — High sensitive operation
- Low — Low sensitive operation

To turn the rain-sensing auto wiper system off, push up the lever to the OFF position, or pull down the lever to the LO or HI position.

CAUTION

- **Do not touch the rain sensor and around it when the wiper switch is in the AUTO position and the ignition switch is in the ON position. The wipers may operate unexpectedly and cause to an injury or a wiper damage.**
- **The rain-sensing auto wipers are intended for use during rain. If the switch is left in the AUTO position, the wipers may operate unexpectedly when dirt, fingerprints, oil film or insects are stuck on or around the sensor. The wipers may also operate when exhaust gas or moisture affect the rain sensor.**
- **When the windshield glass is coated with water repellent, the speed of the rain-sensing auto wipers may be higher**

even though the amount of the rainfall is small.

- Be sure to turn off the rain-sensing auto wiper system when you use a car wash.
- The rain-sensing auto wipers may not operate if rain does not hit the rain sensor even if it is raining.
- Using genuine wiper blades is recommended for proper operation of the rain-sensing auto wiper system. (See “Windshield wiper blades” (P.8-19) for wiper blade replacement.)

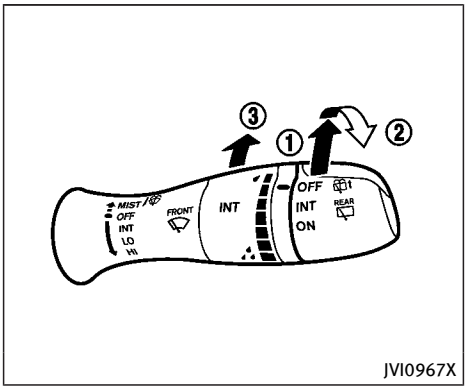

Type A

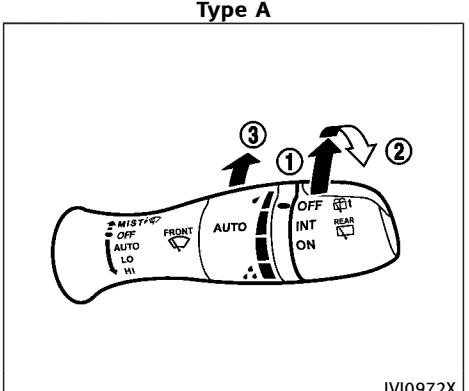

Type B

REAR WINDOW WIPER AND WASHER OPERATION

If the rear window wiper operation is interrupted by snow etc., the wiper may stop moving to protect its motor. If this occurs, turn the wiper switch to OFF and remove the snow etc. on and around the wiper arms. After about 1 minute, turn the switch ON again to operate the wiper.

The rear window wiper and washer operate when the ignition switch is in the ON position.

Turn the switch clockwise from the OFF position to operate the wiper.

① Intermittent (INT) — intermittent operation (not adjustable)

② Low (ON) — continuous low speed operation

Push the switch forward ③ to operate the washer. Then the wiper will also operate several times.

REAR WINDOW AND OUTSIDE MIRROR DEFROSTER SWITCH

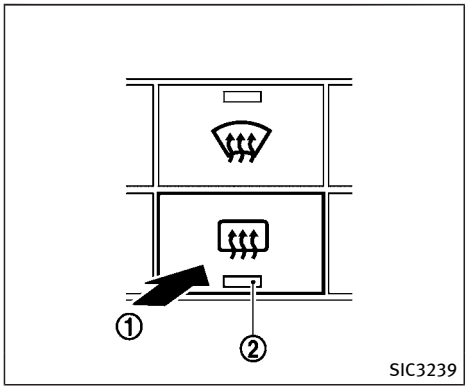

To defog/defrost the rear window glass and outside mirrors, start the engine and push the switch ① on. The indicator light ② will come on. Push the switch again to turn the defroster off.

It will automatically turn off in approximately 15 minutes.

CAUTION

When cleaning the inner side of the rear window, be careful not to scratch or damage the rear window defroster.

HEADLIGHT AND TURN SIGNAL SWITCH

XENON HEADLIGHTS

WARNING

HIGH VOLTAGE

- **When xenon headlights are on, they produce a high voltage. To prevent an electric shock, never attempt to modify or disassemble. Always have your xenon headlights replaced at an INFINITI retailer.**
- **Xenon headlights provide considerably more light than conventional headlights. If they are not correctly aimed, they might temporarily blind an oncoming driver or the driver ahead of you and cause a serious accident. If headlights are not aimed correctly, immediately take your vehicle to an INFINITI retailer and have the headlights adjusted correctly.**

When the xenon headlight is initially turned on, its brightness or color varies slightly. However, the color and brightness will soon stabilize.

- **The life of xenon headlights will be shortened by frequent on-off operation. It is generally desirable not to turn off the headlights for short intervals (for example, when the vehicle stops at a traffic signal). Even when the daytime running lights are active (Canada only), the xenon headlights do not turn on. This way the life of the xenon headlights is not reduced.**
- **If the xenon headlight bulb is close to burning out, the brightness will drastically decrease, the light will start blinking, or the color of the light will become reddish. If one or more of the above signs appear, contact an INFINITI retailer.**

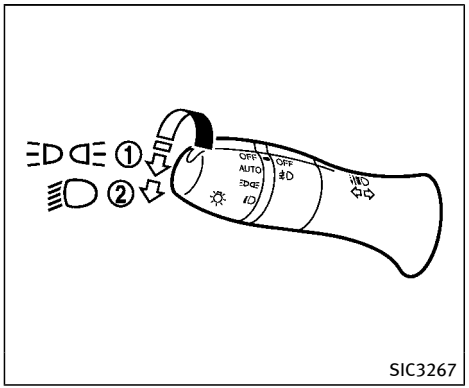

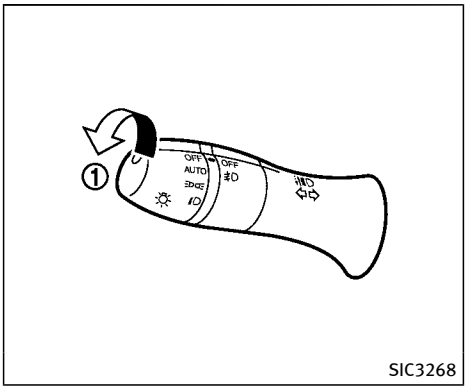

HEADLIGHT SWITCH

Lighting

① Turn the switch to the position: The front parking, side marker, tail, license plate and instrument lights will come on.

② Turn the switch to the position: Headlights will come on and all the other lights remain on.

Autolight system

The autolight system allows the headlights to be set so they turn on and off automatically.

To set the autolight system:

1. Make sure the headlight switch is in the AUTO position ①.
2. Push the ignition switch to the ON position.
3. The autolight system automatically turns the headlights on and off.

To turn the autolight system off, turn the switch to the OFF, or position.

The autolight system can turn on the headlights automatically when it is dark and turn off the headlights when it is light.

If the ignition switch is pushed to the OFF position and one of the doors is opened and this condition is continued, the headlights remain on for a specified period of time.

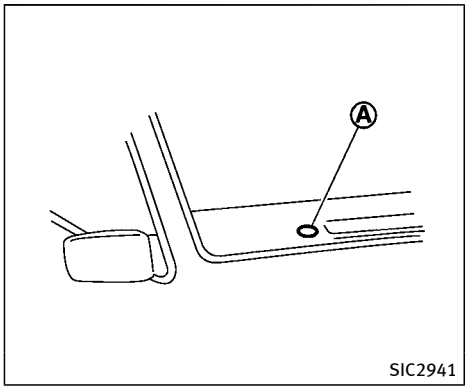

Be sure not to put anything on top of the photo sensor Ⓐ located on the top of the instrument panel. The photo sensor controls the autolight; if it is covered, the photo sensor reacts as if it is dark and the headlights will illuminate.

Automatic headlights off delay:

You can keep the headlights on for up to 180 seconds after you push the ignition switch to OFF and open any door then close all the doors.

You can adjust the period of the automatic headlights off delay from 0 seconds (OFF) to 180 seconds. The factory default setting is 45 seconds.

For automatic headlights off delay setting, see “Comfort settings” (P.4-20).

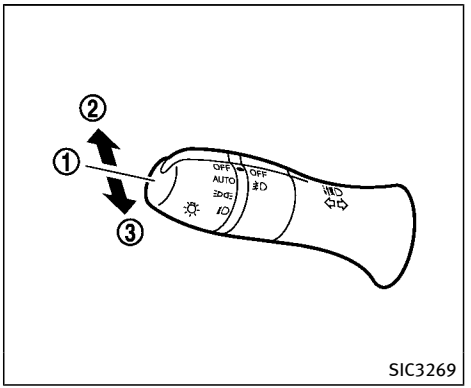

Headlight beam select

① To select the low beam, put the lever in the neutral position as shown.

② To select the high beam, push the lever forward while the switch is in the position. Pull it back to select the low beam.

③ Pulling the lever toward you will flash the headlight high beam even when the headlight switch is in the OFF position.

Battery saver system

A chime will sound when the driver side door is opened with the light switch in the ⊐◁ or ⊐ position and the ignition switch in the ACC, OFF or LOCK position.

When the headlight switch is in the ⊐◁ or ⊐ position while the ignition switch is in the ON position, the lights will automatically turn off after a period of time when the ignition switch has been pushed to the OFF position.

When the headlight switch remains in the ⊐◁ or ⊐ position after the lights automatically turn off, the lights will turn on when the ignition switch is pushed to the ON position.

CAUTION

- **When you turn on the headlight switch again after the lights automatically turn off, the lights will not turn off automatically. Be sure to turn the light switch to the OFF position when you leave the vehicle for extended periods of time, otherwise the battery will be discharged.**
- **Never leave the light switch on when the engine is not running for extended periods of time even if the headlights turn off automatically.**

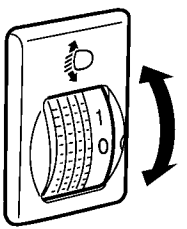

SIC2275

Headlight aiming control (if so equipped)

Depending on the number of occupants in the vehicle and the load it is carrying, the headlight axis may be higher than desired. If the vehicle is traveling on a hilly road, the headlights may directly hit the rearview mirror of the vehicle ahead or the windshield of the oncoming vehicle. The light axis can be lowered with the operation of the switch.

The larger the number designated on the switch, the lower the axis.

When traveling with no heavy load or on a

flat road, select position 0.

WARNING

Xenon headlights are extremely bright compared to conventional headlights. If the xenon headlights hit the rearview mirror of the vehicle ahead or the windshield of oncoming vehicle, the driver of these vehicles may have difficulty driving because of the brightness. Use the headlight aiming control switch to lower the light axis. See "Xenon headlights" (P.2-38) for additional information.

Daytime running light system (Canada only)

The daytime running lights automatically illuminate when the engine is started with the parking brake released. The daytime running lights operate with the headlight switch in the OFF position or in the position. Turn the headlight switch to the position for full illumination when driving at night.

If the parking brake is applied before the engine is started, the daytime running lights do not illuminate. The daytime running lights illuminate once the parking brake is released. The daytime running lights will remain on until the ignition switch is pushed to the OFF position.

WARNING

When the daytime running light system is active, tail lights on your vehicle are not on. It is necessary at dusk to turn on your headlights. Failure to do so could cause an accident injuring yourself and others.

Adaptive Front lighting System (AFS) (if so equipped)

The Adaptive Front lighting System (AFS) will automatically adjust the headlights (low beam) toward the turning direction to improve the driver's view. When the headlight switch is ON and the driver operates the steering wheel in a turn, the AFS system will be activated.

The AFS will operate:

- when the headlight switch is ON.
- when the shift lever is in any position other than P (Park) or R (Reverse).
- when the vehicle is driven at above 16 MPH (25 km/h) for the left-side headlight. Note that the right-side low beam headlight will swivel but the left side will not swivel when the vehicle is at a stop and the steering wheel is turned. The vehicle must attain a speed above 16 MPH (25 km/h) before AFS activates the left-side headlight.

AFS will also adjust the headlight to a proper axis automatically, depending on the number of occupants in the vehicle, the load the vehicle is carrying and the road conditions.

If the AFS OFF indicator light blinks after the ignition switch has been pushed to the ON position, this may indicate that the AFS is not functioning properly. Have the system checked by an INFINITI retailer. When the engine is started, the headlights will vibrate to check the system condition. This is not a malfunction.

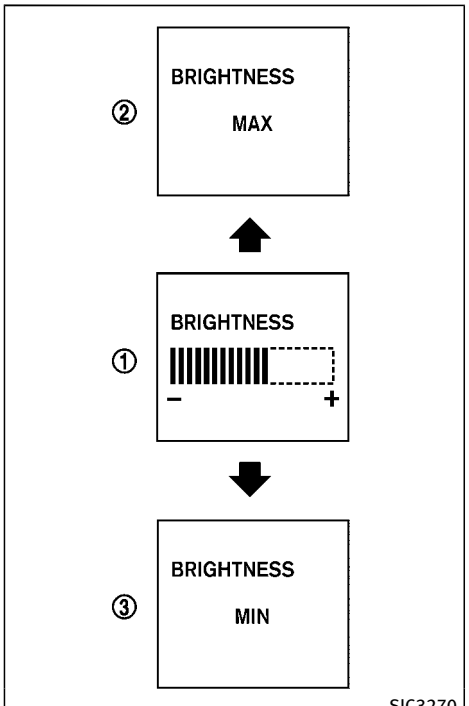

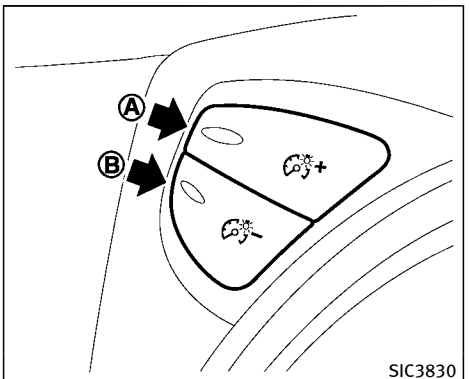

Instrument brightness control

The instrument brightness control switch can be operated when the ignition switch is in the ON position. When the switch is operated, the vehicle information display switches to the brightness adjustment mode.

Push the upper switch Ⓐ to brighten the instrument panel lights. The bar ① moves to the + side. When reaching the maximum brightness, “MAX” appears on the display ②.

Push the lower switch Ⓑ to dim the instrument panel lights. The bar ① moves to the – side. When reaching the minimum brightness, “MIN” appears on the display ③. However, “MIN” does not appear during the nighttime.

The vehicle information display returns to the normal display under the following conditions:

- when the instrument brightness control switch is not operated for more than 5 seconds.
- when the ❑ or ● switch on the right side of the combination meter panel is pushed.

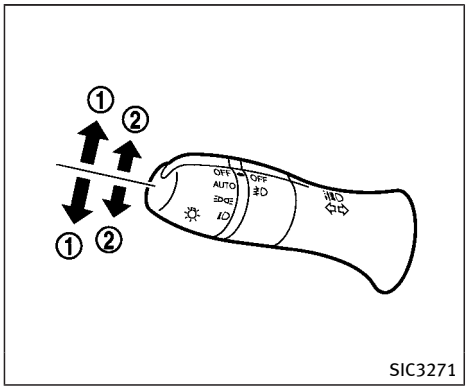

SIC3271

TURN SIGNAL SWITCH

① Turn signal

Move the lever up or down to signal the turning direction. When the turn is completed, the turn signals cancel automatically.

② Lane change signal

To indicate a lane change, move the lever up or down to the point where lights begin flashing.

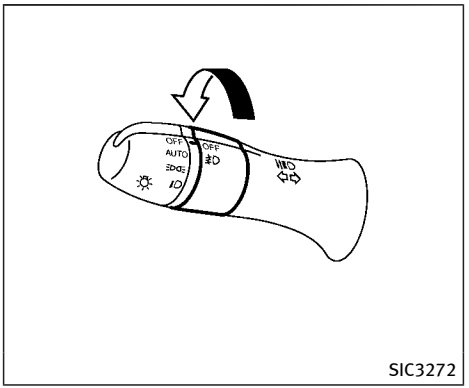

SIC3272

FOG LIGHT SWITCH

To turn the fog lights on, turn the headlight switch to the position, then turn the switch to the position. To turn them off, turn the switch to the OFF position.

The headlights must be on for the fog lights to operate.

HORN

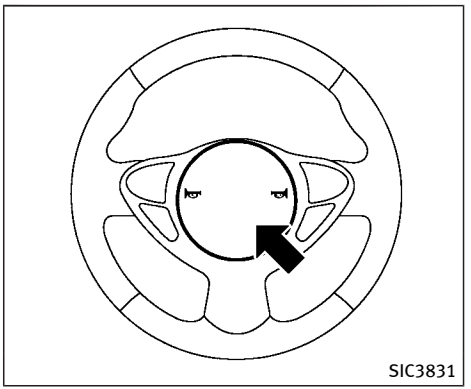
SIC3831

To sound the horn, push the center pad area of the steering wheel.

WARNING

Do not disassemble the horn. Doing so could affect proper operation of the supplemental front air bag system. Tampering with the supplemental front air bag system may result in serious personal injury.

HEATED SEATS (if so equipped)

WARNING

Do not use or allow occupants to use the seat heater if you or the occupants cannot monitor elevated seat temperatures or have an inability to feel pain in body parts that contact the seat. Use of the seat heater by such people could result in serious injury.

CAUTION

- **The battery could run down if the seat heater is operated while the engine is not running.**
- **Do not use the seat heater for extended periods or when no one is using the seat.**
- **Do not put anything on the seat which insulates heat, such as a blanket, cushion, seat cover, etc. Otherwise, the seat may become overheated.**
- **Do not place anything hard or heavy on the seat or pierce it with a pin or similar object. This may result in damage to the heater.**
- **Any liquid spilled on the heated seat should be removed immediately with a dry cloth.**
- **When cleaning the seat, never use gasoline, thinner, or any similar materials.**
- **If any malfunctions are found or the heated seat does not operate, turn the switch off and have the system checked by an INFINITI retailer.**

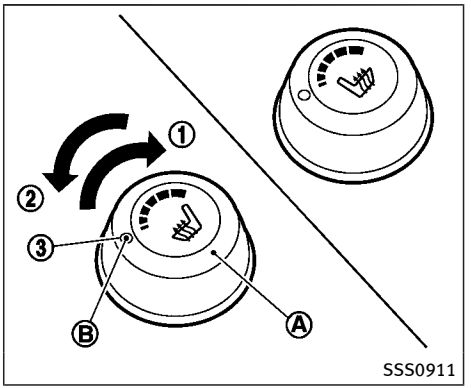

The front seats are warmed by built-in heaters. The switches located on the center console can be operated independently of each other.

1. Start the engine.
2. Turn the control knob Ⓐ to the right ① and select the desired heat range.
   - For high heat, turn the knob to the right ①.
   - For low heat, turn the knob to the left ②.
   - The indicator light Ⓑ will illuminate when the heater is on.
3. To turn off the heater, return the knob

to the OFF position ③. Make sure that the indicator light turns off.

The heater is controlled by a thermistor, automatically turning the heater on and off. The indicator light will remain on as long as the switch is on.

When the vehicle's interior is warmed, or before you leave the vehicle, be sure to turn off the switch.

CLIMATE CONTROLLED SEATS (if so equipped)

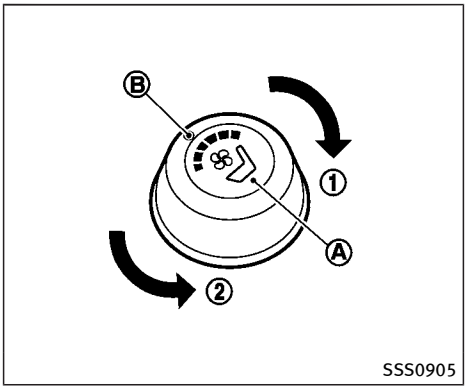

The climate controlled seat warms up or cools down the front seats by blowing warm or cool air from the surface of the seat. The switches located on the center console can be operated independently of each other.

1. Start the engine.
2. Turn the control knob Ⓐ to the H (Heat) side ① or to the C (Cool) side ②. The indicator light Ⓑ on the control knob will illuminate.
3. Adjust the desired amount of the air using the control knob Ⓐ.

   The climate controlled seat blower remains on low speed for approximately 60 seconds after turning the switch on or selecting the desired temperature.
4. When the vehicle's interior is warmed or cooled, and/or before you leave the vehicle, be sure to turn the control knob to the OFF position (center). The indicator light Ⓑ on the control knob goes off at the OFF position.

   To check the air filter for the climate controlled seat, contact an INFINITI retailer.

WARNING

Do not use or allow occupants to use the climate control seats if you or the occupants cannot monitor seat temperatures or have an inability to feel pain in those body parts in contact with the seat. Use of the climate control seats by such people could result in serious injury.

CAUTION

- The battery could run down if the climate controlled seat is operated while the engine is not running.
- Do not use the climate controlled seat for extended periods or when no one is using the seat.
- Do not put anything on the seat which insulates heat, such as a blanket, cushion, seat cover, etc. Otherwise, the seat may become overheated.
- Do not place anything hard or heavy on the seat or pierce it with a pin or similar object. This may result in damage to the climate controlled seat.
- Any liquid spilled on the seat should be removed immediately with a dry cloth.
- The climate controlled seat has an air filter. Do not operate climate controlled seat without an air filter. This may result in damage to the system.
- When cleaning the seat, never use gasoline, thinner, or any similar materials.
- If any malfunctions are found or the climate controlled seat does not operate, turn the switch off and have the system checked by an INFINITI retailer.

WARNING SYSTEMS SWITCH (if so equipped)

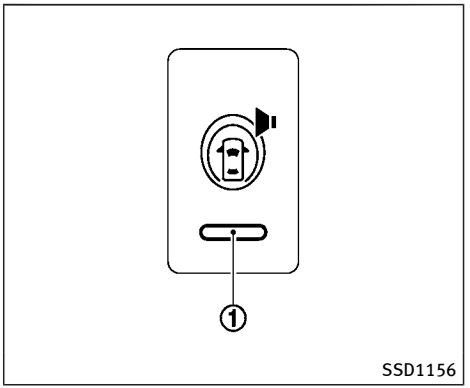

The warning systems switch will turn on and off the Lane Departure Warning (LDW) system and the Forward Collision Warning (FCW) system at the same time.

The LDW system will sound a warning chime and blink the LDW indicator light (orange) to alert the driver if the vehicle is traveling close to either the left or the right of a traveling lane with detectable lane markers. (See “Lane Departure Warning (LDW) system/Lane Departure Prevention (LDP) system” (P.5-21).)

The FCW system will sound a warning chime and the vehicle ahead detection indicator light blinks to alert the driver if

the vehicle is traveling close to the vehicle ahead. (See “Forward Collision Warning (FCW) system” (P.5-67).)

The warning systems switch is automatically turned on when the engine is started, and the warning systems ON indicator ① on the switch illuminates.

To cancel the warning systems, push the warning systems switch to turn off the system. The warning systems ON indicator will turn off.

NOTE:

If you continue to push the warning systems switch from off to on for over 4 seconds, a chime will sound. This will change the default status of the LDW and FCW systems to OFF so that these systems will not automatically turn on when the engine is started. If this procedure is repeated, the default status will return to ON.

SNOW MODE SWITCH

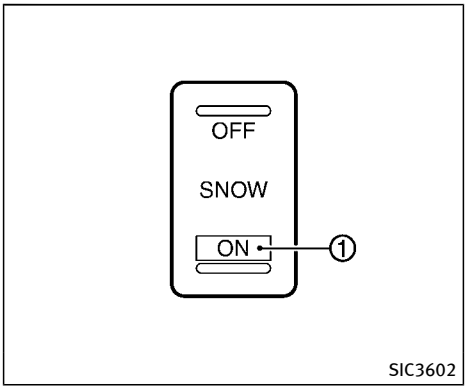

For driving or starting the vehicle on snowy roads or slippery areas, turn on the SNOW mode switch. The indicator light ① on the switch will illuminate. When the SNOW mode is activated, engine output is controlled to avoid wheel spin.

Turn off the SNOW mode for normal driving.

INTELLIGENT BRAKE ASSIST (IBA) OFF SWITCH (if so equipped)

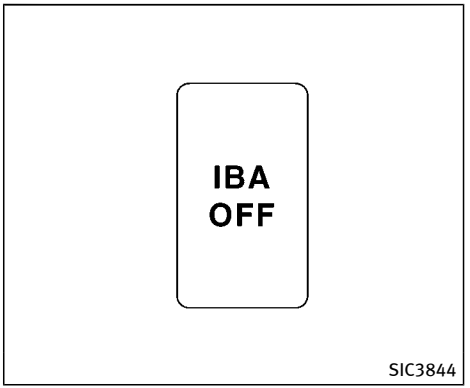

The vehicle should be driven with the Intelligent Brake Assist (IBA) system on for most driving conditions.

The Intelligent Brake Assist (IBA) system will sound a warning chime to alert the driver when the vehicle is traveling too close to the vehicle ahead and will apply the brake control if necessary.

To turn off the system, push the IBA OFF switch. The IBA OFF indicator light will illuminate.

The IBA system will remain in the last ON or OFF state it was left in until it is manually changed by pushing the IBA OFF switch.

VEHICLE DYNAMIC CONTROL (VDC) OFF SWITCH

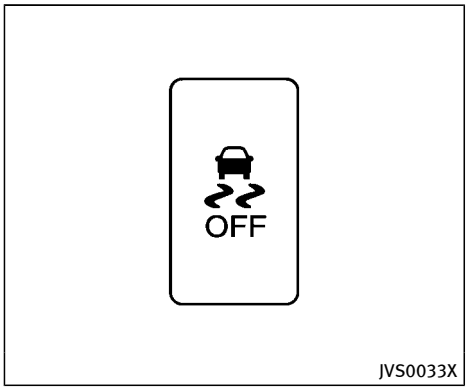

The vehicle should be driven with the Vehicle Dynamic Control (VDC) system on for most driving conditions.

If the vehicle is stuck in mud or snow, the VDC system reduces the engine output to reduce wheel spin. The engine speed will be reduced even if the accelerator is depressed to the floor. If maximum engine power is needed to free a stuck vehicle, turn the VDC system off.

To turn off the VDC system, push the VDC OFF switch. The indicator light will illuminate.

Push the VDC OFF switch again or restart the engine to turn on the system. (See “Vehicle Dynamic Control (VDC) system” (P.5-84).)

CLOCK

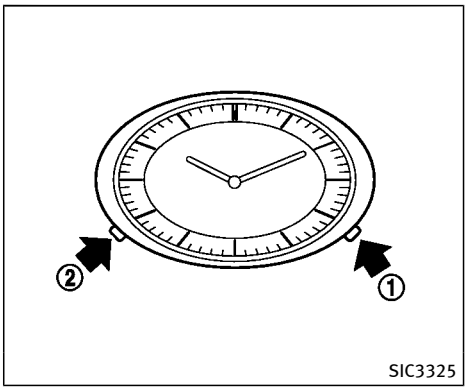

If the power supply is disconnected, the clock will not indicate the correct time. Readjust the time.

ADJUSTING THE TIME

1. To set the clock forward, push the button ①.
2. To set the clock backward, push the button ②.
3. To move forward or backward faster, push and hold the button more than 5 seconds.

For details about display clock adjustment (if so equipped), see “How to use SETTING button” (P.4-15).

POWER OUTLET

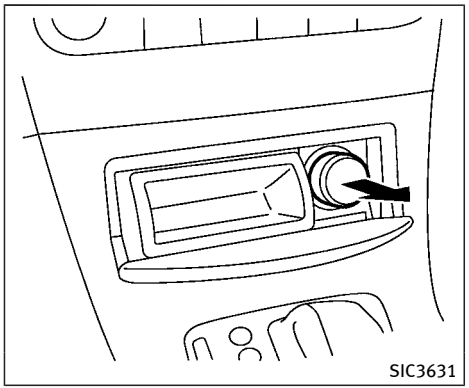

Front

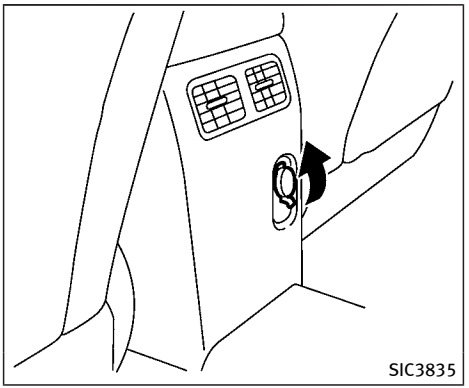

Rear console

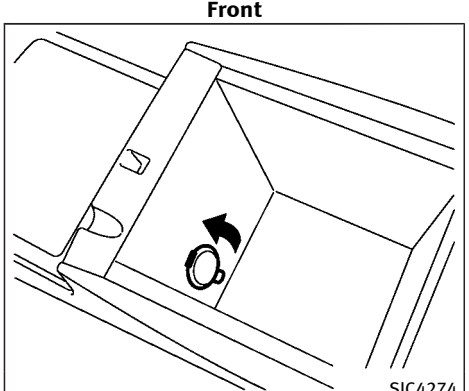

Center console

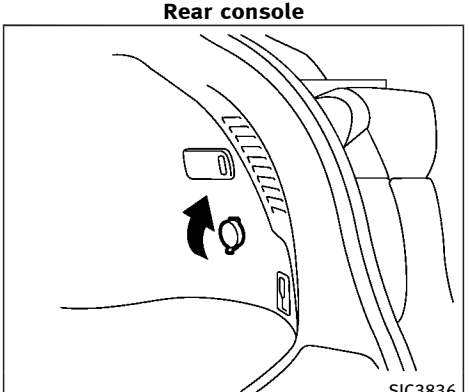

Cargo area

The power outlet is used for powering electrical accessories such as cellular telephones.

CAUTION

- **The outlet and plug may be hot during or immediately after use.**
- **Do not use with accessories that exceed a 12 volt, 120W (10A) power draw. Do not use double adapters or more than one electrical accessory.**
- **Use power outlet with the engine running to avoid discharging the vehicle battery.**
- **Avoid using power outlet when the air conditioner, headlights or rear window defroster is on.**
- **This power outlet is not designed for use with a cigarette lighter unit.**
- **Push the plug in as far as it will go. If good contact is not made, the plug may overheat or the internal temperature fuse may blow.**
- **Before inserting or disconnecting a plug, be sure the electrical accessory being used is turned OFF.**

- When not in use, be sure to close the cap. Do not allow water or any other liquid to contact the outlet.

CUP HOLDERS

CAUTION

- Avoid abrupt starting and braking when the cup holder is being used to prevent spilling the drink. If the liquid is hot, it can scald you or your passenger.
- Use only soft cups in the cup holder. Hard objects can injure you in an accident.
- Do not recline the rear seatback when you use the cup holders on the rear armrest. Doing so may cause the beverages to spill over, and if they are hot, they may scald the passengers.

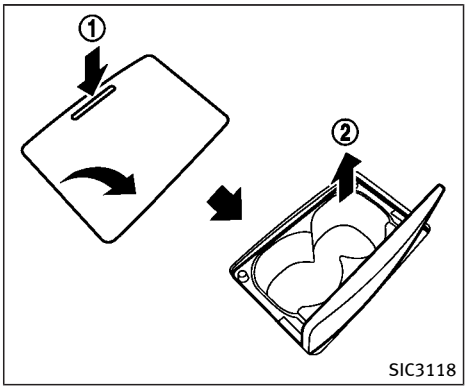

Front

To open the cup holder, push the lid ①.

The flap will be folded down when inserting a large container.

To close, lower the cup holder lid and push it down lightly.

To clean the front cup holder, pull up the inside tray ② and remove it.

The cup holder is not designed to store personal effects.

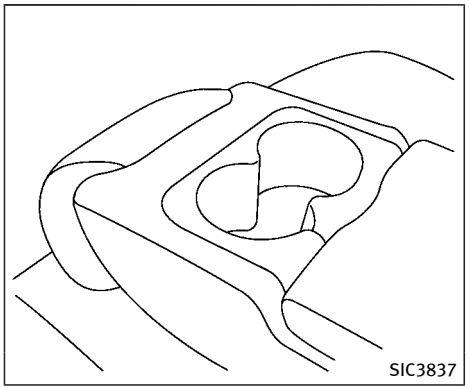

Rear

The cup holders for rear passengers are located on the rear center armrest.

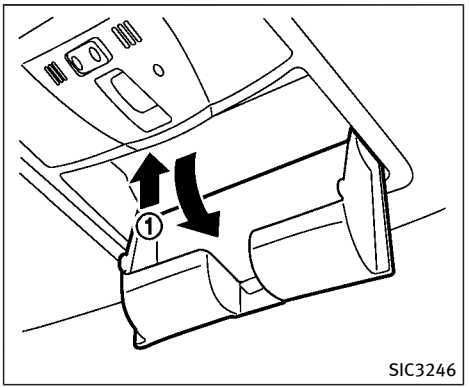

SUNGLASSES HOLDER

WARNING

Keep the sunglasses holder closed while driving to prevent an accident.

To open the sunglasses holder, push ①.

CAUTION

- **Do not use for anything other than glasses.**
- **Do not leave glasses in the sunglasses holder while parking in direct sunlight. The heat may damage the glasses.**

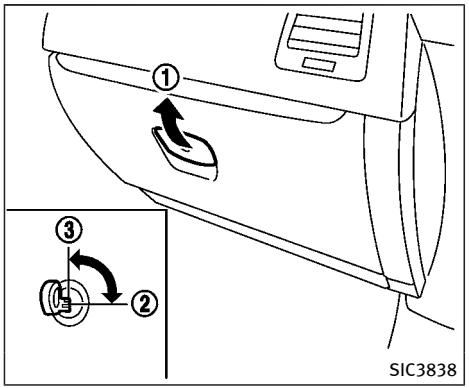

GLOVE BOX

WARNING

Keep glove box lid closed while driving to help prevent injury in an accident or a sudden stop.

To open the glove box, pull the handle ①.

To close, push the lid in until the lock latches.

To lock ②/unlock ③ the glove box, use the mechanical key. For the mechanical key usage, see “Keys” (P.3-2).

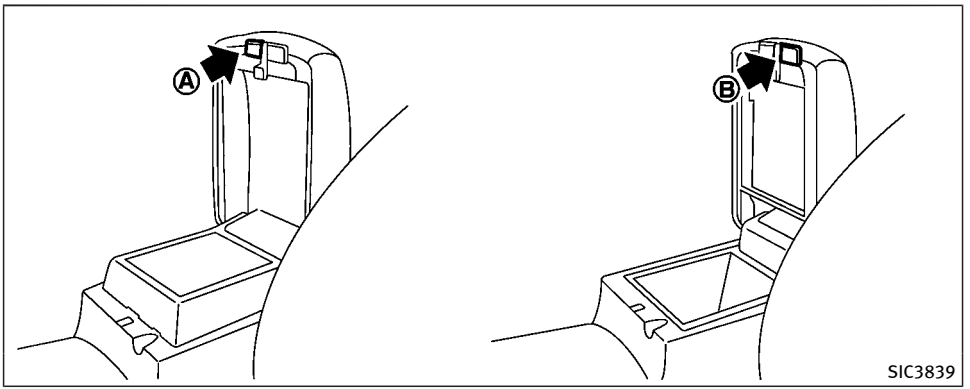

Front

CONSOLE BOX

Front

When the lever Ⓐ (front passenger’s seat side) is pulled, the upper case is available for storing some small items. When the lever Ⓑ (driver’s seat side) is pulled, the bottom case is available for storing some larger ones.

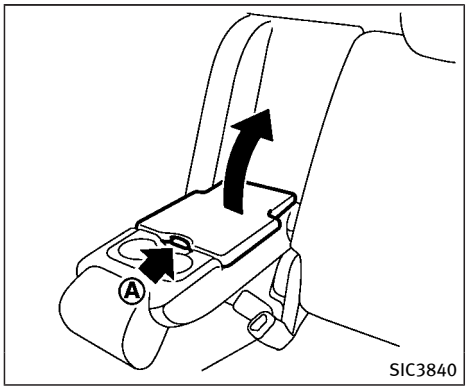

Rear

To open the lid, push the button Ⓐ and pull up the lid.

To close, push the lid down until the lock latches.

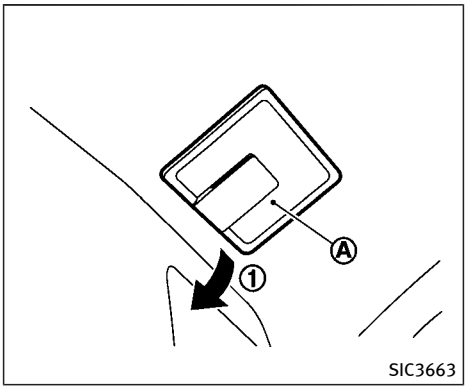

CARD HOLDER

Pull the sun visor down ① and slide a card in the card holder Ⓐ.

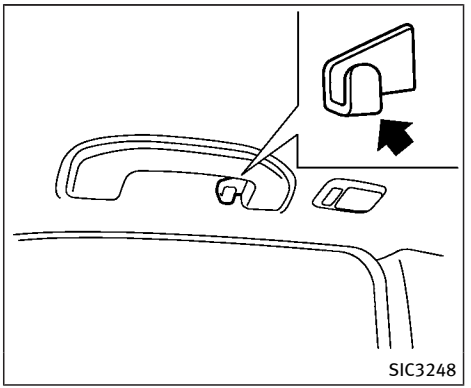

COAT HOOKS

The coat hooks are equipped beside the rear personal lights.

CAUTION

Do not place items which are more than 2 lb (1 kg) on the hook.

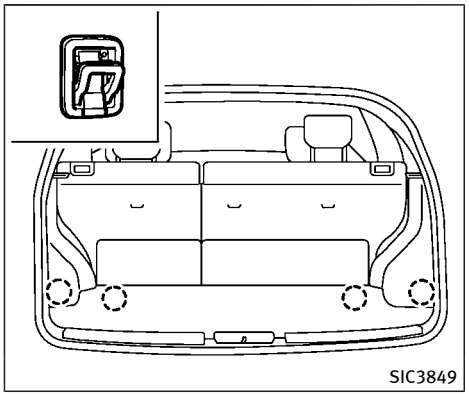

CARGO HOOKS (if so equipped)

WARNING

- **Always make sure that the cargo is properly secured. Use the suitable ropes and hooks.**
- **Unsecured cargo can become dangerous in an accident or sudden stop.**

CAUTION

Do not apply a total load of more than 22 lb (10 kg) to a single hook.

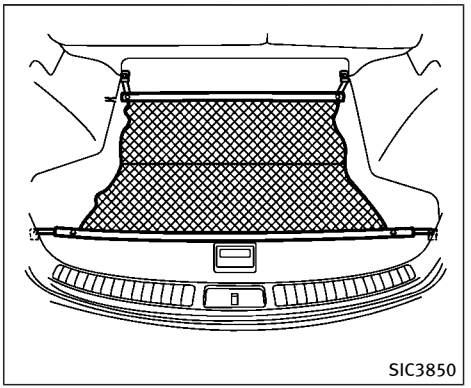

CARGO NET (if so equipped)

The cargo net helps keep packages in the cargo area from moving around while your vehicle is driven.

To install the cargo net, attach the hooks to the retainers.

WARNING

- **Properly secure all cargo to help prevent it from sliding or shifting. Do not place cargo higher than the seatbacks. In a sudden stop or collision, unsecured cargo could cause personal injury.**

- **Be sure to secure all four hooks into the retainers. The cargo restrained in the net must not exceed 30 lb (13.6 kg) or the net may not stay secured.**

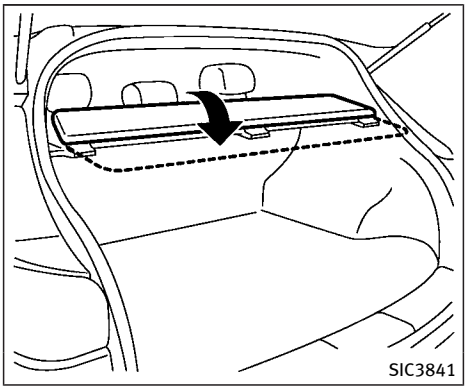

CARGO COVER (if so equipped)

The cargo cover keeps the contents in the cargo area hidden from the outside.

To use the cargo cover, unfold the flap as illustrated.

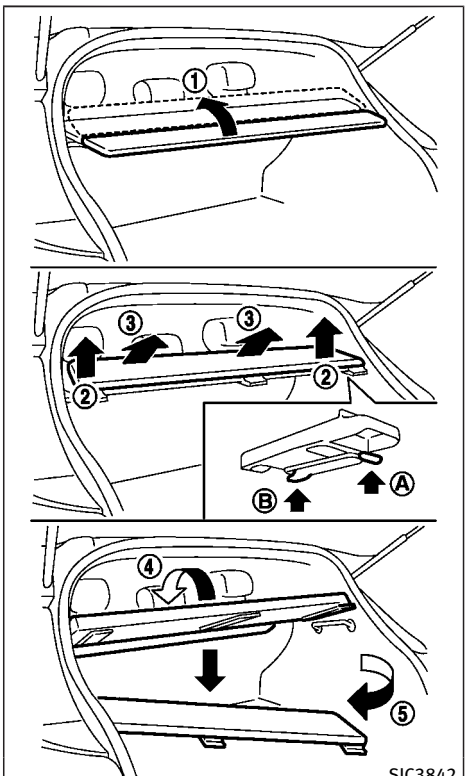

To remove the cargo cover,

1. Return the rear seatback to the full upright position.
2. Fold the flap ①.
3. Lift up the rear side of the cargo cover ② to unlatch the rear side of the cargo cover Ⓐ from the hanger bars.
4. Then, tilt up the cargo cover and slightly slide it forward ③ to unhook the front side of the cargo cover Ⓑ from the hanger bars.
5. Incline the cargo cover above the hanger bars towards the front of the vehicle ④ and lower the cargo cover.
6. Pull either side of the cargo cover and remove the cargo cover ⑤.

When attaching the cargo cover, be sure to return the rear seatback to the upright position and make sure that the cargo cover is latched securely.

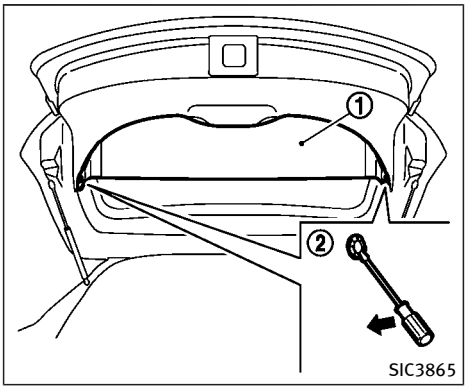

The rear cargo cover ① can be removed from the lift gate.

To remove the rear cargo cover, open the lift gate then remove the clips ② with a suitable tool.

WARNING

- **Never put anything on the cargo cover, no matter how small. Any object on it could cause an injury in an accident or sudden stop.**
- **Do not leave the cargo cover in the vehicle with it disengaged from the holder.**
- **Properly secure all cargo with ropes or straps to help prevent it from sliding or shifting. Do not place cargo higher than the seatbacks. In a sudden stop or collision, unsecured cargo could cause personal injury.**
- **If the cargo cover contacts the top tether strap when it is attached to the top tether anchor, remove the cargo cover from the vehicle or secure it on the cargo floor below its attachment location. If the cargo cover is not removed, it may damage the top tether strap during a collision. Your child could be seriously injured or killed in a collision if the child restraint top tether strap is damaged.**
- **Do not allow cargo to contact the top tether strap when it is attached to the top tether anchor. Properly secure the cargo so it does not contact the top tether strap. Cargo that is not properly secured or cargo that contacts the top tether strap may damage the top tether strap during a collision. Your child could be seriously injured or killed in a collision if the child restraint top tether strap is damaged.**

- **Do not leave the cargo cover in the vehicle with the rear half of the flap folded up while driving. You may not be able to see out the rear window, which may cause an accident.**
- **Do not use the cargo cover if the rear seats are folded down.**

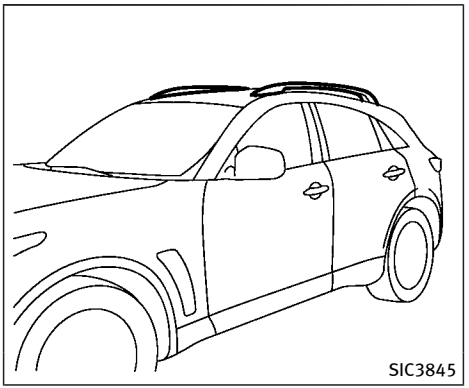

ROOF RACK (if so equipped)

Always distribute the luggage evenly on the roof rack. Do not load more than 99 lb (45 kg) on the roof rails. Observe the maximum load limit shown on the crossbars or roof carriers when you attach them on the roof rails. Contact an INFINITI retailer for crossbar or other equipment information.

Be careful that your vehicle does not exceed the Gross Vehicle Weight Rating (GVWR) or its Gross Axle Weight Rating (GAWR front and rear). The GVWR and GAWR are located on the F.M.V.S.S. or C.V.M.S.S. certification label (located on the driver's door pillar). For more information regarding GVWR and GAWR, see "Vehicle loading information" (P.9-15).

WARNING

- **Drive extra carefully when the vehicle is loaded at or near the cargo carrying capacity, especially if the significant portion of that load is carried on the roof rack.**
- **Heavy loading of the roof rack has the potential to affect the vehicle stability and handling during sudden or unusual handling maneuvers.**
- **Roof rack load should be evenly distributed.**
- **Do not exceed maximum roof rack load weight capacity.**
- **Properly secure all cargo with ropes or straps to help prevent it from sliding or shifting. In a sudden stop or collision, unsecured cargo could cause personal injury.**

CAUTION

Use care when placing or removing items from the roof rack. If you cannot comfortably lift the items onto the roof rack from the ground, use a ladder or stool.

POWER WINDOWS

WARNING

- **Make sure that all passengers have their hands, etc. inside the vehicle while it is in motion and before closing the windows. Use the window lock switch to prevent unexpected use of the power windows.**
- **Do not leave children unattended inside the vehicle. They could unknowingly activate switches or controls and become trapped in the window. Unattended children could become involved in serious accidents.**

The power windows operate when the ignition switch is in the ON position or for about 45 seconds after the ignition switch is pushed to the OFF position. If the driver's or front passenger's door is opened during this period of about 45 seconds, power to the windows is canceled.

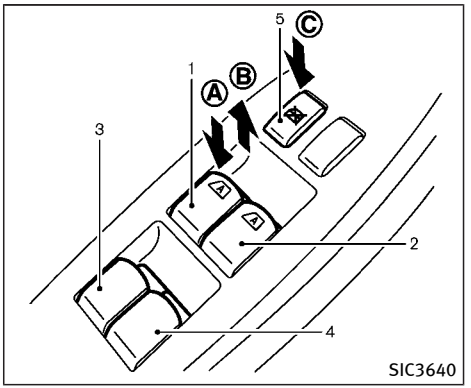

1. Driver side window
2. Front passenger side window
3. Rear left passenger side window
4. Rear right passenger side window
5. Window lock button

Main power window switch (driver's side)

To open or close the window, push down Ⓐ or pull up Ⓑ the switch and hold it. The main switch (driver side switches) will open or close all the windows.

Locking passengers' windows

When the lock button Ⓒ is pushed in, only the driver side window can be opened or closed. Push it in again to cancel.

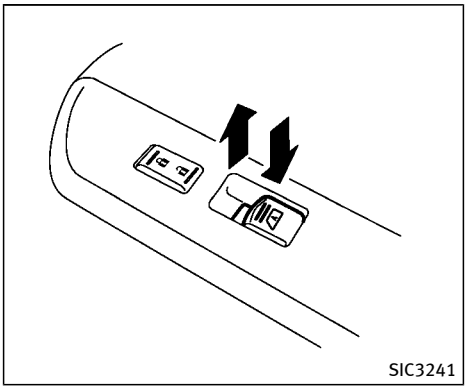

Passenger side power window switch

The passenger side switch will open or close only the corresponding window. To open or close the window, push down or pull up the switch and hold it.

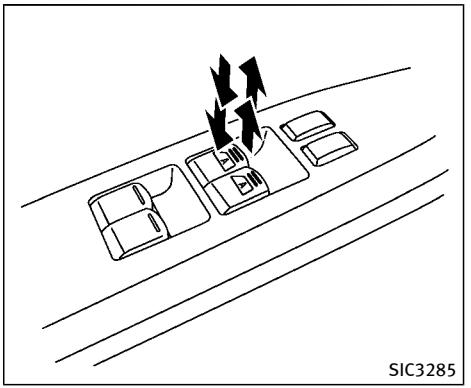

Automatic operation

The automatic function is available for the switch that has an A mark on its surface.

To fully open or close the window, completely push down or pull up the switch and release it; it need not be held. The window will automatically open or close all the way. To stop the window, just push or lift the switch in the opposite direction.

A light push or pull on the switch will cause the window to open or close until the switch is released.

Auto reverse function

WARNING

There are some small distances immediately before the closed position which cannot be detected. Make sure that all passengers have their hands, etc., inside the vehicle before closing the window.

If the control unit detects something caught in the window as it is closing, the window will be immediately lowered.

The auto reverse function can be activated when the window is closed by automatic operation when the ignition switch is in the ON position or for 45 seconds after the ignition switch is pushed to the OFF position.

Depending on the environment or driving conditions, the auto reverse function may be activated if an impact or load similar to something being caught in the window occurs.

If the windows do not close automatically

If the power window automatic function (closing only) does not operate properly, perform the following procedure to initialize the power window system.

1. Push the ignition switch to the ON position.
2. Close the door.
3. Open the window completely by operating the power window switch.
4. Pull the power window switch and hold it to close the window, and then hold the switch more than 3 seconds after the window is closed completely.
5. Release the power window switch. Operate the window by the automatic function to confirm the initialization is complete.
6. Perform steps 2 through 5 above for other windows.

If the power window automatic function does not operate properly after performing the procedure above, have your vehicle checked by an INFINITI retailer.

WARNING

- **In an accident you could be thrown from the vehicle through an open moonroof. Always use seat belts and child restraints.**
- **Do not allow anyone to stand up or extend any portion of their body out of the moonroof opening while the vehicle is in motion or while the moonroof is closing.**

CAUTION

- **Remove water drops, snow, ice or sand from the moonroof before opening.**
- **Do not place any heavy object on the moonroof or surrounding area.**

POWER MOONROOF

The moonroof only operates when the ignition switch is in the ON position.

The moonroof is operational for about 45 seconds, even if the ignition switch is pushed to the OFF position. If the driver's door or the passenger's door is opened during this period of about 45 seconds, power to the moonroof is canceled.

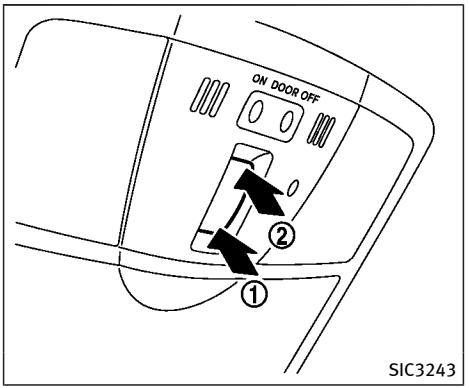

Sunshade

The sunshade will open automatically when the moonroof is opened. However, it must be closed manually.

Tilting the moonroof

To tilt up, first close the moonroof, then push the UP ① side of the moonroof switch and release it; it need not be held. To tilt down the moonroof, push the DOWN ② side.

Sliding the moonroof

To fully open or close the moonroof, push the OPEN ② or CLOSE ① side of the moonroof switch and release it; it need not be held. The roof will automatically open or close all the way. To stop the roof, push the switch once more while it is opening or closing.

Auto reverse function

WARNING

There are some small distances immediately before the closed position which cannot be detected. Make sure that all passengers have their hands, etc., inside the vehicle before closing the moonroof.

If the control unit detects something caught in the moonroof when it is closing, the moonroof will be immediately opened.

The auto reverse function can be activated when the moonroof is closed by automatic operation when the ignition switch is in the ON position or for about 45 seconds after the ignition switch is pushed to the OFF position.

If the moonroof cannot be closed automatically when the auto reverse function activates due to a malfunction, push and hold the CLOSE ① side of the moonroof

switch.

Depending on the environment or driving conditions, the auto reverse function may be activated if an impact or load similar to something being caught in the moonroof occurs.

If the moonroof does not operate

If the moonroof does not operate properly, perform the following procedure to initialize the moonroof operation system.

1. If the moonroof is open, close it fully by repeatedly pushing the CLOSE ① side of the moonroof switch.
2. Push and hold the CLOSE ① side of the moonroof switch to tilt the moonroof up.
3. Release the moonroof switch after the moonroof moves slightly up and down.
4. Push and hold the OPEN ② side of the moonroof switch to fully tilt the moonroof down.
5. Check if the moonroof switch operates normally.

If the moonroof does not operate properly after performing the procedure above, have your vehicle checked by an INFINITI retailer.

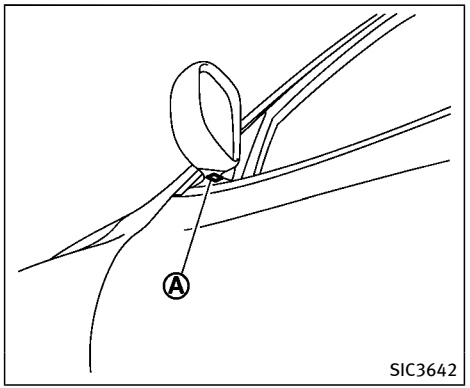

To activate or deactivate the welcome light function, perform the following procedure.

1. Push the ignition switch to the ON position.
2. Open the driver's side door.
3. Push the door handle request switch on the driver's side door handle for more than 5 seconds with the driver's door open.
4. A chime sounds when the setting is completed.

Once the welcome light function is active, the puddle light Ⓐ and the passenger cabin illumination will illuminate when you approach the vehicle with the Intelligent Key (within approximately 3.3 feet (1 m) of the antenna built inside the door handles) and the following conditions are met.

- All doors are closed and locked.
- The ignition switch is in the LOCK or OFF position.
- The Intelligent Key is outside the vehicle.
- The puddle light operates within a set duration.

BATTERY SAVER SYSTEM

The welcome light function will be deactivated automatically to prevent battery discharge under the following conditions.

- If the welcome light function does not operate within a set duration. Note that the duration is set to 14 days as the factory default setting. To activate the welcome light function again, start the engine.
- If the welcome light function is activated 15 consecutive times when you approach and leave the vehicle with the Intelligent Key without the doors being unlocked. To activate the welcome light function again, unlock any door.

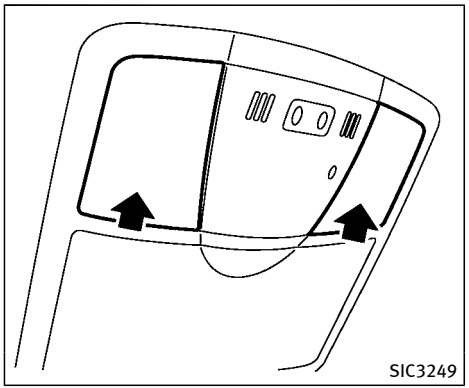

MAP LIGHTS

Push the button as illustrated to turn the light on or off.

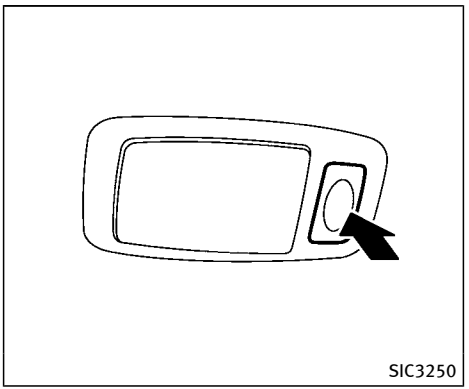

PERSONAL LIGHTS

Rear

Push the button as illustrated to turn the light on or off.

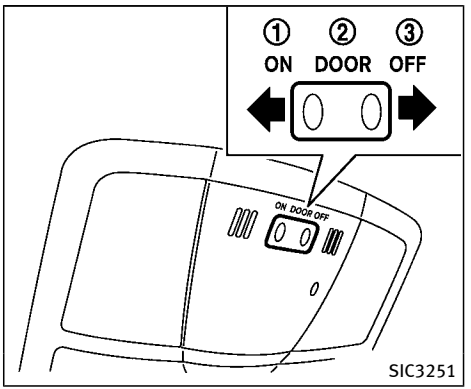

INTERIOR LIGHT CONTROL SWITCH

The interior light control switch has three positions: ON, DOOR and OFF.

ON position

When the switch is in the ON position ① the map lights and rear personal lights will illuminate.

DOOR position

When the switch is in the DOOR position ②, the map lights and rear personal lights will illuminate for a period of time under the following conditions:

- ignition switch is switched to the LOCK position
- doors are unlocked by pushing the UNLOCK button on the Intelligent Key or door handle request switch with the ignition switch in the LOCK position
- any door is opened and then closed with the ignition switch in the LOCK position
- any door is opened with the ignition switch in the ACC or ON position
  - remain on while the door is opened. When the door is closed, the lights go off.

The lights will also turn off after a period of time when the ignition switch has been pushed to the OFF or LOCK position to prevent the battery from becoming discharged.

When the auto interior illumination is set to the OFF position (see “Vehicle information and settings” (P.4-9)), the lights will illuminate under the following condition:

- any door is opened with the ignition switch in any position
  - remain on while the door is opened. When the door is closed, the lights go off.

OFF position

When the switch is in the OFF position ③, the lights will not illuminate, regardless of the condition.

CAUTION

Do not use for extended periods of time with the engine stopped. This could result in a discharged battery.

VANITY MIRROR LIGHTS

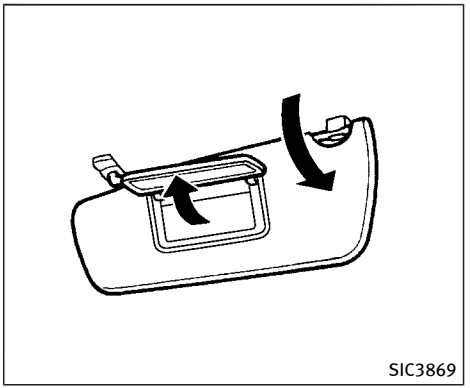

The light on the vanity mirror will turn on when the cover on the vanity mirror is opened.

When the cover is closed, the light will turn off.

The lights will also turn off after a period of time when the lights remain illuminated to prevent the battery from becoming discharged.

CARGO LIGHT

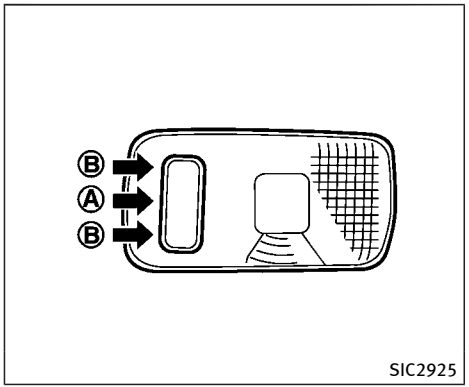

When the switch is in the DOOR position Ⓐ, the light illuminates while the lift gate is opened. When the lift gate is closed, the light will turn off.

When the switch is in the OFF position Ⓑ, the light will turn off.

The light will turn off after a period of time when the lights remain illuminated to prevent the battery from becoming discharged.

HomeLink® UNIVERSAL TRANSCEIVER

The HomeLink® Universal Transceiver provides a convenient way to consolidate the functions of up to three individual hand-held transmitters into one built-in device.

HomeLink® Universal Transceiver:

- Will operate most Radio Frequency (RF) devices such as garage doors, gates, home and office lighting, entry door locks and security systems.
- Is powered by your vehicle's battery. No separate batteries are required. If the vehicle's battery is discharged or is disconnected, HomeLink® will retain all programming.

When the HomeLink® Universal Transceiver is programmed, retain the original transmitter for future programming procedures (Example: new vehicle purchases). Upon sale of the vehicle, the programmed HomeLink® Universal Transceiver buttons should be erased for security purposes. For additional information, refer to "Programming HomeLink®" (P.2-67).

WARNING

- **Do not use the HomeLink® Universal Transceiver with any garage door opener that lacks safety stop and reverse features as required by federal safety standards. (These standards became effective for opener models manufactured after April 1, 1982). A garage door opener which cannot detect an object in the path of a closing garage door and then automatically stop and reverse, does not meet current federal safety standards. Using a garage door opener without these features increases the risk of serious injury or death.**
- **During the programming procedure your garage door or security gate will open and close (if the transmitter is within range). Make sure that people or objects are clear of the garage door, gate, etc. that you are programming.**
- **Your vehicle's engine should be turned off while programming the HomeLink® Universal Transceiver. Do not breathe exhaust gases; they contain colorless and odorless carbon monoxide. Carbon monoxide is dangerous. It can cause unconsciousness or death.**

PROGRAMMING HomeLink®

If you have any questions or are having difficulty programming your HomeLink® buttons, refer to the HomeLink® web site at: www.homelink.com or call 1-800-355-3515.

NOTE:

It is also recommended that a new battery be placed in the hand-held transmitter of the device being programmed to HomeLink® for quicker programming and accurate transmission of the radio-frequency.

1. Position the end of your hand-held transmitter 1-3 in (26-76 mm) away from the HomeLink® surface, keeping the HomeLink® indicator light ① in view.

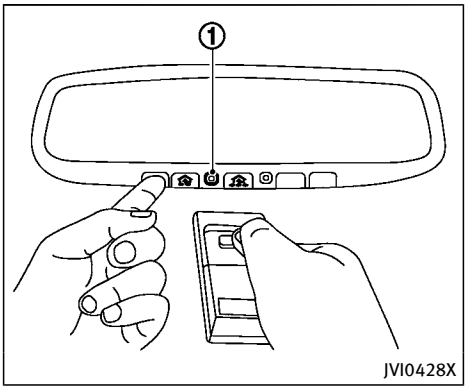

2. Using both hands, simultaneously press and hold the desired HomeLink® button and handheld transmitter button. DO NOT release until the HomeLink® indicator light ① flashes slowly and then rapidly. When the indicator light flashes rapidly, both buttons may be released. (The rapid flashing indicates successful programming.)

   NOTE:
   Some devices to be programmed may require you to replace Step 2 with the cycling procedure noted in the "Programming HomeLink® for Canadian customers and gate openers" (P.2-68).

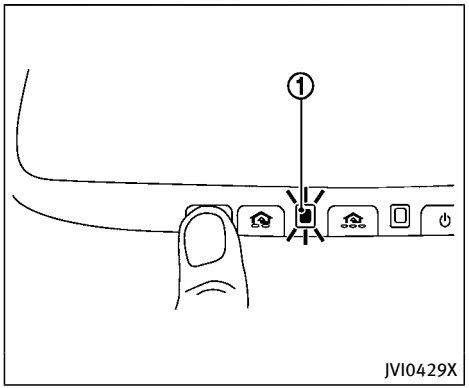

3. Press and hold the programmed HomeLink® button and observe the indicator light.
   - If the indicator light 1 is solid/continuous, programming is complete and your device should activate when the HomeLink® button is pressed and released.
   - If the indicator light 1 blinks rapidly for two seconds and then turns to a solid/continuous light, continue with Steps 4-6 for a rolling code device. A second person may make the following steps easier. Use a ladder or other device. Do not stand on your vehicle to perform the next steps.
4. At the receiver located on the garage door opener motor in the garage, locate the "learn" or "smart" button (the name and color of the button may vary by manufacturer but it is usually located near where the hanging antenna wire is attached to the unit). If there is difficulty locating the button, reference the garage door opener's manual.
5. Press and release the "learn" or "smart" button.

   NOTE:
   Once the button is pressed, you have approximately 30 seconds to initiate the next step.
6. Return to the vehicle and firmly press and hold the programmed HomeLink® button for two seconds and release. Repeat the "press/hold/release" sequence up to 3 times to complete the programming process. HomeLink® should now activate your rolling code equipped device.
7. If you have any questions or are having difficulty programming your HomeLink® buttons, refer to the HomeLink® web site at: www.homelink.com or call 1-800-355-3515.

PROGRAMMING HomeLink® FOR CANADIAN CUSTOMERS AND GATE OPENERS

Canadian radio-frequency laws require transmitter signals to "time-out" (or quit) after several seconds of transmission – which may not be long enough for HomeLink® to pick up the signal during programming. Similar to this Canadian law, some U.S. gate operators are designed to "time-out" in the same manner.

If you live in Canada or you are having difficulties programming a gate operator or garage door opener by using the "Programming HomeLink®" procedures, replace "Programming HomeLink®" Step 2 with the following:

NOTE:

When programming a garage door opener, etc., unplug the device during the "cycling" process to prevent possible damage to the garage door opener components.

Step 2: Using both hands, simultaneously press and hold the desired HomeLink® button and the hand-held transmitter

button. During programming, your hand-held transmitter may automatically stop transmitting. Continue to press and hold the desired HomeLink® button while you press and re-press ("cycle") your hand-held transmitter every two seconds until the frequency signal has been learned. The HomeLink® indicator light will flash slowly and then rapidly after several seconds upon successful programming. **DO NOT** release until the HomeLink® indicator light flashes slowly and then rapidly. When the indicator light flashes rapidly, both buttons may be released. The rapid flashing indicates successful programming.

Proceed with "Programming HomeLink®" step 3 to complete.

Remember to plug the device back in when programming is completed.

OPERATING THE HomeLink® UNIVERSAL TRANSCEIVER

The HomeLink® Universal Transceiver, after it is programmed, can be used to activate the programmed device. To operate, simply press and release the appropriate programmed HomeLink® Universal Transceiver button. The amber indicator light will illuminate while the signal is being transmitted.

For convenience, the hand-held transmitter of the device may also be used at any time.

PROGRAMMING TROUBLESHOOTING

If the HomeLink® does not quickly learn the hand-held transmitter information:

- replace the hand-held transmitter batteries with new batteries.
- position the hand-held transmitter with its battery area facing away from the HomeLink® surface.
- press and hold both the HomeLink® and hand-held transmitter buttons without interruption.
- position the hand-held transmitter 1-3 in (26-76 mm) away from the HomeLink® surface. Hold the transmitter in that position for up to 15 seconds. If HomeLink® is not programmed within that time, try holding the transmitter in another position - keeping the indicator light in view at all times.

If you have any questions or are having difficulty programming your HomeLink® buttons, refer to the HomeLink® web site at: www.homelink.com or 1-800-355-3515.

CLEARING THE PROGRAMMED INFORMATION

The following procedure clears the programmed information from both buttons. Individual buttons cannot be cleared. However, individual buttons can be reprogrammed, see "Reprogramming a single HomeLink® button" (P.2-69).

To clear all programming

1. Press and hold the two outer HomeLink® buttons until the indicator light begins to flash in approximately 10 seconds. Do not hold for longer than 20 seconds.
2. Release both buttons.

HomeLink® is now in the programming mode and can be programmed at any time beginning with "Programming HomeLink®" - Step 1.

REPROGRAMMING A SINGLE HomeLink® BUTTON

To reprogram a HomeLink® Universal Transceiver button, complete the following.

1. Press and hold the desired HomeLink® button. **DO NOT** release the button.

2. The indicator light will begin to flash after 20 seconds. Without releasing the HomeLink® button, proceed with "Programming HomeLink®" - Step 1.

For questions or comments, contact HomeLink® at: www.homelink.com or 1-800-355-3515.

The HomeLink® Universal Transceiver button has now been reprogrammed. The new device can be activated by pushing the HomeLink® button that was just programmed. This procedure will not affect any other programmed HomeLink® buttons.

IF YOUR VEHICLE IS STOLEN

If your vehicle is stolen, you should change the codes of any non-rolling code device that has been programmed into HomeLink®. Consult the Owner's Manual of each device or call the manufacturer or retailer of those devices for additional information.

When your vehicle is recovered, you will need to reprogram the HomeLink® Universal Transceiver with your new transmitter information.

FCC Notice:

For USA:

This device complies with Part 15 of the FCC Rules. Operation is subject to the following two conditions: (1) This device may not cause harmful interference, and (2) this device must accept any interference received, including interference that may cause undesired operation.

NOTE:

Changes or modifications not expressly approved by the party responsible for compliance could void the user's authority to operate the equipment.

For Canada:

This device complies with Industry Canada licence-exempt RSS standard(s). Operation is subject to the following two conditions: (1) this device may not cause interference, and (2) this device must accept any interference, including interference that may cause undesired operation of the device.

3 Pre-driving checks and adjustments

Keys 3-2
Intelligent Key 3-2
Valet hand-off 3-3
Doors 3-4
Locking with mechanical key 3-4
Opening and closing windows with the mechanical key 3-4
Locking with inside lock knob 3-5
Locking with power door lock switch 3-5
Automatic door locks 3-5
Child safety rear door lock 3-6
Intelligent Key system 3-6
Intelligent Key operating range 3-8
Door locks/unlocks precaution 3-9
Intelligent Key operation 3-9
Battery saver system 3-12
Warning signals 3-12
Troubleshooting guide 3-13
Remote keyless entry system 3-14
How to use remote keyless entry system 3-14
Hood 3-18
Lift gate 3-18
Operating power lift gate 3-19
Auto closure 3-23
Lift gate release lever 3-24
Fuel-filler door 3-24
Opening the fuel-filler door 3-24
Fuel-filler cap 3-24
Tilt/telescopic steering 3-27
Manual operation (if so equipped) 3-27
Electric operation (if so equipped) 3-27
Sun visors 3-28
Mirrors 3-29
Inside mirror 3-29
Outside mirrors 3-30
Vanity mirror 3-32
Automatic drive positioner (if so equipped) 3-32
Entry/exit function 3-32
Seat synchronization function 3-33
Memory storage 3-34
System operation 3-35

A key number plate is supplied with your keys. Record the key number and keep it in a safe place (such as your wallet), not in the vehicle. If you lose your keys, see an INFINITI retailer for duplicates by using the key number. INFINITI does not record any key numbers so it is very important to keep track of your key number plate.

A key number is only necessary when you have lost all keys and do not have one to duplicate from. If you still have a key, this key can be duplicated by an INFINITI retailer.

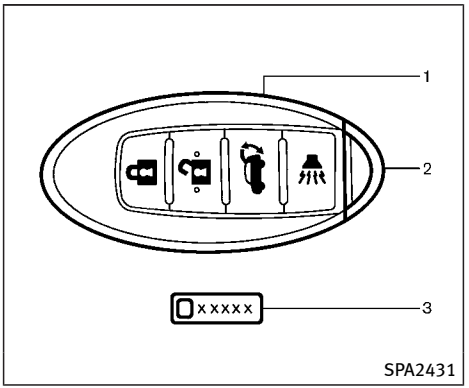

1. Intelligent Key (2)
2. Mechanical key (inside Intelligent Key) (2)
3. Key number plate (1)

INTELLIGENT KEY

Your vehicle can only be driven with the Intelligent Keys which are registered to your vehicle's Intelligent Key system components and INFINITI Vehicle Immobilizer System components. As many as 4 Intelligent Keys can be registered and used with one vehicle. The new keys must be registered by an INFINITI retailer prior to use with the Intelligent Key system and INFINITI Vehicle Immobilizer System of your vehicle. Since the registration process requires erasing all memory in the Intelligent Key components when registering new keys, be sure to take all Intelligent Keys that you have to the INFINITI retailer.

CAUTION

- **Be sure to carry the Intelligent Key with you when driving. The Intelligent Key is a precision device with a built-in transmitter. To avoid damaging it, please note the following.**
  - **The Intelligent Key is water resistant; however, wetting may damage the Intelligent Key. If the Intelligent Key gets wet, immediately wipe until it is completely dry.**
  - **Do not bend, drop or strike it against another object.**
  - **If the outside temperature is below 14°F (–10°C) degrees, the battery of the Intelligent Key may not function properly.**
  - **Do not place the Intelligent Key for an extended period in a place where temperatures exceed 140°F (60°C).**

— **Do not change or modify the Intelligent Key.**

— **Do not use a magnet key holder.**

— **Do not place the Intelligent Key near an electric appliance such as a television set or personal computer.**

— **Do not allow the Intelligent Key to come into contact with water or salt water, and do not wash it in a washing machine. This could affect the system function.**

- **If an Intelligent Key is lost or stolen, INFINITI recommends erasing the ID code of that Intelligent Key. This will prevent the Intelligent Key from unauthorized use to unlock the vehicle. For information regarding the erasing procedure, please contact an INFINITI retailer.**

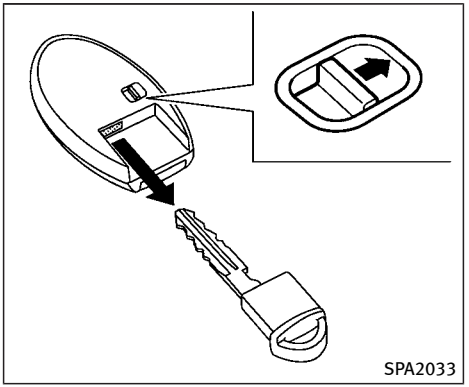

Mechanical key

To remove the mechanical key, release the lock knob at the back of the Intelligent Key.

To install the mechanical key, firmly insert it into the Intelligent Key until the lock knob returns to the lock position.

Use the mechanical key to lock or unlock the doors and the glove box if they are equipped with a key cylinder.

See “Doors” (P.3-4) and “Storage” (P.2-51).

CAUTION

Always carry the mechanical key installed in the Intelligent Key.

VALET HAND-OFF

When you have to leave a key with a valet, give them the Intelligent Key itself and keep the mechanical key with you to protect your belongings.

To prevent the glove box from being opened during valet hand-off, follow the procedures below.

1. Remove the mechanical key from the Intelligent Key.
2. Lock the glove box with the mechanical key.
3. Hand the Intelligent Key to the valet, keeping the mechanical key in your pocket or bag for insertion into the Intelligent Key when you retrieve your vehicle.

See “Storage” (P.2-51).

WARNING

- **Always have the doors locked while driving. Along with the use of seat belts, this provides greater safety in the event of an accident by helping to prevent persons from being thrown from the vehicle. This also helps keep children and others from unintentionally opening the doors, and will help keep out intruders.**
- **Before opening any door, always look for and avoid oncoming traffic.**
- **Do not leave children unattended inside the vehicle. They could unknowingly activate switches or controls. Unattended children could become involved in serious accidents.**

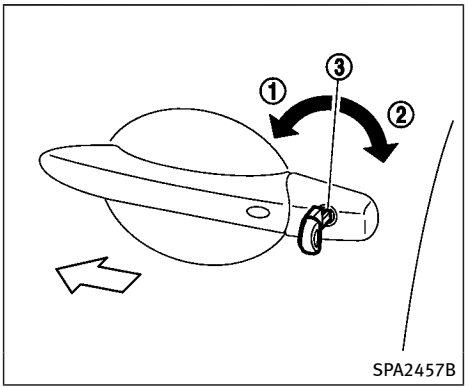

LOCKING WITH MECHANICAL KEY

The power door lock system allows you to lock or unlock all doors simultaneously using the mechanical key.

- Turning the driver's door key cylinder to the front of the vehicle ① will lock all doors.
- Turning the driver's door key cylinder once to the rear of the vehicle ② will unlock the driver's door. After returning the key to the neutral position ③, turning it to the rear again within 60 seconds will unlock all doors.
- You can switch the lock system to the mode that allows you to open all the doors when the key is turned once. (See "How to use SETTING button" (P.4-15).)

OPENING AND CLOSING WINDOWS WITH THE MECHANICAL KEY

The driver's door key operation also allows you to open and close the window that is equipped with the automatic open/close function. (See "Power windows" (P.2-59).)

To open the window, turn the driver's door key cylinder to the rear of the vehicle for **longer than 1 second**. The door is unlocked and the window keeps opening while turning the key.

This function can also be performed by pushing and holding the door UNLOCK button of the Intelligent Key. (See "Remote keyless entry system" (P.3-14).)

To close the window, turn the driver's door key cylinder to the front of the vehicle for **longer than 1 second**. The door is locked and the window keeps closing while turning the key.

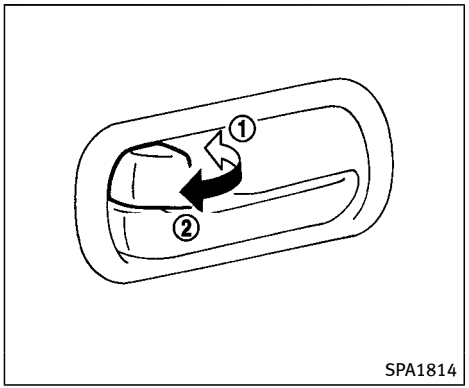

LOCKING WITH INSIDE LOCK KNOB

To lock the door individually, move the inside lock knob to the lock position ①.

To unlock, move the inside lock knob to the unlock position ②.

Be sure not to leave the Intelligent Key inside the vehicle.

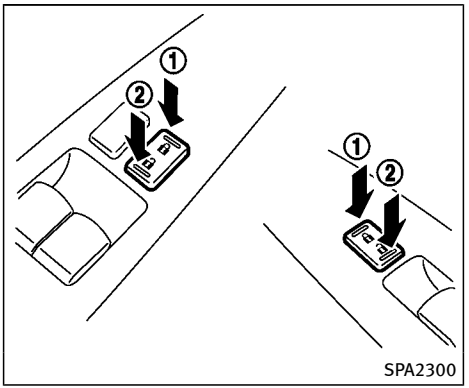

LOCKING WITH POWER DOOR LOCK SWITCH

Operating the power door lock switch will lock or unlock all the doors. The switches are located on the driver's and front passenger's door armrests.

To lock the doors, push the power door lock switch to the lock position ①.

Be sure not to leave the Intelligent Key inside the vehicle.

To unlock the doors including the fuel-filler door, push the power door lock switch to the unlock position ②.

Lockout protection

When the power door lock switch (driver or front passenger) is moved to the lock position with the Intelligent Key in the port and any door open, all doors will lock and unlock automatically. With the Intelligent Key left in the vehicle (not in the Intelligent Key port) and any door open, all doors will unlock automatically and a chime will sound after the door is closed.

These functions help to prevent the Intelligent Key from being accidentally locked inside the vehicle.

AUTOMATIC DOOR LOCKS

- All doors will be locked automatically when the vehicle speed reaches 15 MPH (24 km/h).
- All doors will be unlocked automatically when the ignition switch is placed in the OFF position.

The automatic unlock function can be deactivated or activated. To deactivate or activate the automatic door unlock system, perform the following procedure:

1. Close all doors.
2. Place the ignition switch in the ON position.

3. Within 20 seconds of performing Step 2, push and hold the power door lock switch to the 🔓 position (UNLOCK) for more than 5 seconds.
4. When activated, the hazard indicator will flash twice. When deactivated, the hazard indicator will flash once.
5. The ignition switch must be placed in the OFF and ON position again between each setting change.

When the automatic door unlock system is deactivated, the doors do not unlock when the ignition switch is placed in the OFF position. To unlock the door manually, use the inside lock knob or the power door lock switch (driver's or front passenger's side).

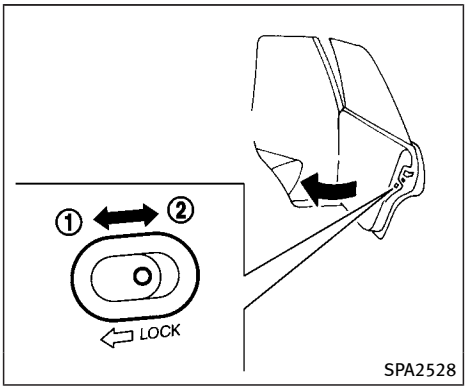

CHILD SAFETY REAR DOOR LOCK

Child safety rear door locks help prevent doors from being opened accidentally, especially when small children are in the vehicle.

When the levers are in the lock position ①, the rear doors can be opened only from the outside.

To disengage, move the levers to the unlock position ②.

⚠ WARNING

- **Radio waves could adversely affect electric medical equipment. Those who use a pacemaker should contact the electric medical equipment manufacturer for the possible influences before use.**
- **The Intelligent Key transmits radio waves when the buttons are pushed. The FAA advises that the radio waves may affect aircraft navigation and communication systems. Do not operate the Intelligent Key while on an airplane. Make sure the buttons are not operated unintentionally when the unit is stored during a flight.**

The Intelligent Key system can operate all doors and the lift gate using the remote controller function or pushing the request switch on the vehicle without taking the key out from a pocket or purse. The operating environment and/or conditions may affect the Intelligent Key system operation.

Be sure to read the following before using the Intelligent Key system.

CAUTION

- **Be sure to carry the Intelligent Key with you when operating the vehicle.**
- **Never leave the Intelligent Key in the vehicle when you leave the vehicle.**

The Intelligent Key is always communicating with the vehicle as it receives radio waves. The Intelligent Key system transmits weak radio waves. Environmental conditions may interfere with the operation of the Intelligent Key system under the following operating conditions.

- When operating near a location where strong radio waves are transmitted, such as a TV tower, power station and broadcasting station.
- When in possession of wireless equipment, such as a cellular telephone, transceiver, and CB radio.
- When the Intelligent Key is in contact with or covered by metallic materials.
- When any type of radio wave remote control is used nearby.
- When the Intelligent Key is placed near an electric appliance such as a personal computer.
- When the vehicle is parked near a parking meter.

In such cases, correct the operating conditions before using the Intelligent Key function or use the mechanical key.

Although the life of the battery varies depending on the operating conditions, the battery's life is approximately 2 years. If the battery is discharged, replace it with a new one.

When the Intelligent Key battery is almost discharged, insert the Intelligent Key into the Intelligent Key port to start the engine. Replace the discharged battery with a new one as soon as possible. For more details, see "Push-button ignition switch" (P.5-11).

Since the Intelligent Key is continuously receiving radio waves, if the key is left near equipment which transmits strong radio waves, such as signals from a TV and personal computer, the battery life may become shorter.

For information regarding replacement of a battery, see "Intelligent Key battery replacement" (P.8-24).

As many as 4 Intelligent Keys can be registered and used with one vehicle. For information about the purchase and use of additional Intelligent Keys, contact an INFINITI retailer.

CAUTION

- **Do not allow the Intelligent Key, which contains electrical components, to come into contact with water or salt water. This could affect the system function.**
- **Do not drop the Intelligent Key.**
- **Do not strike the Intelligent Key sharply against another object.**
- **Do not change or modify the Intelligent Key.**
- **Wetting may damage the Intelligent Key. If the Intelligent Key gets wet, immediately wipe until it is completely dry.**
- **If the outside temperature is below 14°F (–10°C) degrees, the battery of the Intelligent Key may not function properly.**
- **Do not place the Intelligent Key for an extended period in an area where temperatures exceed 140°F (60°C).**
- **Do not attach the Intelligent Key with a key holder that contains a magnet.**

- **Do not place the Intelligent Key near equipment that produces a magnetic field, such as a TV, audio equipment and personal computers.**

If an Intelligent Key is lost or stolen, INFINITI recommends erasing the ID code of that Intelligent Key from the vehicle. This may prevent the unauthorized use of the Intelligent Key to operate the vehicle. For information regarding the erasing procedure, contact an INFINITI retailer.

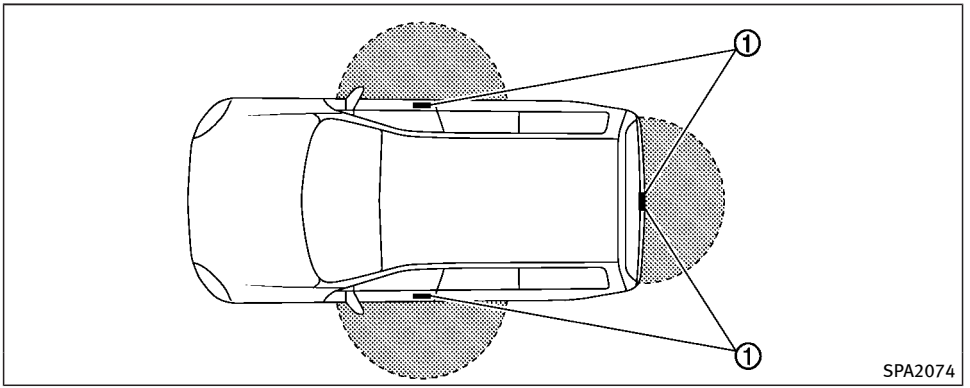

INTELLIGENT KEY OPERATING RANGE

The Intelligent Key functions can only be used when the Intelligent Key is within the specified operating range from the request switch ①.

When the Intelligent Key battery is discharged or strong radio waves are present near the operating location, the Intelligent Key system's operating range becomes narrower, and the Intelligent Key may not function properly.

The operating range is within 31.50 in (80 cm) from each request switch ①.

If the Intelligent Key is too close to the door glass, handle or rear bumper the request switches may not function.

When the Intelligent Key is within the operating range, it is possible for anyone who does not carry the Intelligent Key to push the request switch to lock/unlock the doors, including the lift gate.

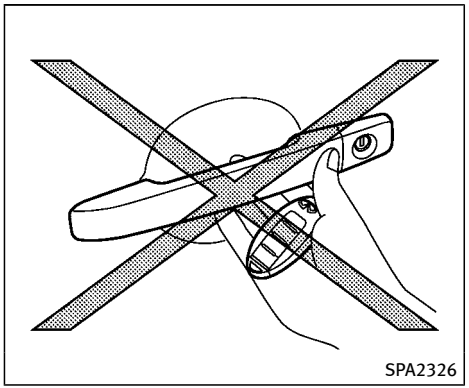

DOOR LOCKS/UNLOCKS PRECAUTION

- Do not push the door handle request switch with the Intelligent Key held in your hand as illustrated. The close distance to the door handle will cause the Intelligent Key system to have difficulty recognizing that the Intelligent Key is outside the vehicle.
- After locking with the door handle request switch, verify the doors are securely locked by testing them.
- To prevent the Intelligent Key from being left inside the vehicle, make sure you carry the key with you and then lock the doors.
- Do not pull the door handle before pushing the door handle request switch. The door will be unlocked but will not open. Release the door handle once and pull it again to open the door.
- The Intelligent Key system (opening/closing doors with the door handle request switch) can be set to remain inactive. (See “Vehicle information and settings” (P.4-9).)

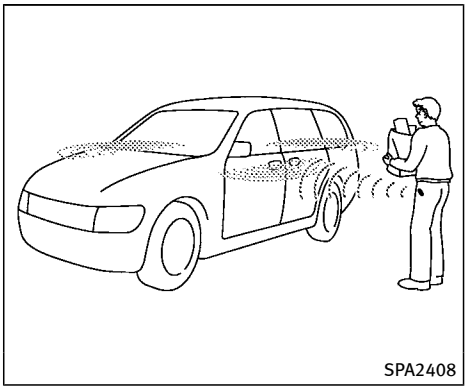

INTELLIGENT KEY OPERATION

You can lock or unlock the doors without taking the key out from your pocket or bag.

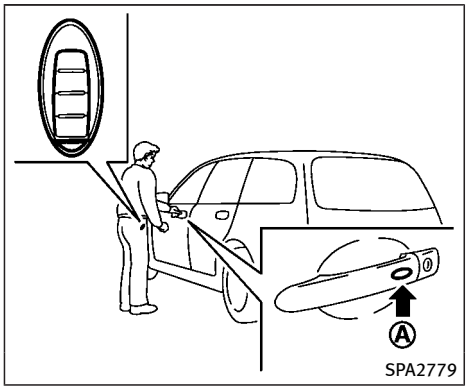

SPA2779

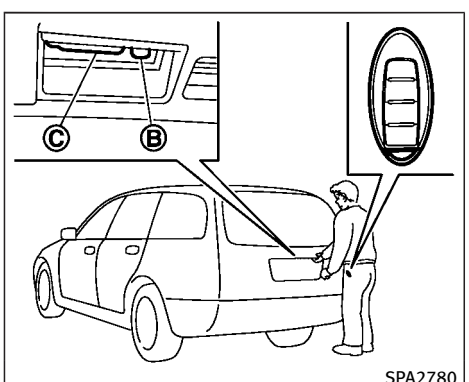

SPA2780

When you carry the Intelligent Key with you, you can lock or unlock all doors by pushing the door handle request switch (driver's or front passenger's) Ⓐ or the lift gate request switch Ⓑ within the range of operation.

When you lock or unlock the doors or the lift gate, the hazard indicator will flash and the horn (or the outside chime) will sound as a confirmation. For details, see "Setting hazard indicator and horn mode" (P.3-16).

Locking doors and fuel-filler door

1. Move the shift lever to the P (Park) position, push the ignition switch to the OFF position and make sure you carry the Intelligent Key with you.*1
2. Close all the doors.*2
3. Push the door handle request switch (driver's or front passenger's) Ⓐ or the lift gate request switch Ⓑ while carrying the Intelligent Key with you.*3
4. All the doors and fuel-filler door will lock.
5. The hazard indicator flashes twice and the outside chime sounds twice.

*1: Doors will lock with the Intelligent Key while the ignition switch is in the ACC or ON position.

*2: Doors will not lock with the Intelligent Key while any door (including the lift gate) is open.

*3: Doors will not lock by pushing the door handle request switch with the Intelligent Key inside the vehicle.

However, when an Intelligent Key is inside the vehicle, doors can be locked with another registered Intelligent Key.

CAUTION

- **After locking the doors using the request switch, make sure that the doors have been securely locked by operating the door handles.**
- **When locking the doors using the request switch, make sure to have the Intelligent Key in your possession before operating the request switch to prevent the Intelligent Key from being left in the vehicle.**
- **The request switch is operational only when the Intelligent Key has been detected by the Intelligent Key system.**

Lockout protection:

To prevent the Intelligent Key from being accidentally locked in the vehicle, lockout protection is equipped with the Intelligent Key system.

When the driver's side door is open, the doors are locked, and then the Intelligent Key is put inside the vehicle and all the doors are closed; the lock will automatically unlock and the door buzzer sounds.

NOTE:

The doors may not lock when the Intelligent Key is in the same hand that is operating the request switch to lock the door. Put the Intelligent Key in a purse, pocket or your other hand.

CAUTION

The lockout protection may not function under the following conditions:

- **When the Intelligent Key is placed on top of the instrument panel.**
- **When the Intelligent Key is placed inside the glove box or a storage bin.**
- **When the Intelligent Key is placed inside the door pockets.**
- **When the Intelligent Key is placed inside or near metallic materials.**

Unlocking doors and fuel-filler door

1. Push the door handle request switch (driver's or front passenger's) Ⓐ or the lift gate request switch Ⓑ once while carrying the Intelligent Key with you.

   When you approach the vehicle with the Intelligent Key, the puddle light and the passenger cabin illumination will illuminate and stay on for a short period of time. (See "Welcome light" (P.2-63).)
2. The hazard indicator flashes once and outside chime sounds once. The corresponding door will unlock.

   The fuel-filler door will also unlock when the driver's door handle request switch is pushed.
3. Push the door handle request or the lift gate request switch again within 60 seconds.
4. The hazard indicator flashes once and outside chime sounds once again. All the doors will unlock.

   The fuel-filler door will also unlock when the front passenger's door handle or lift gate request switch is pushed.

The lift gate can be unlocked and opened by pushing the lift gate opener switch. See "Lift gate" (P.3-18).

All doors will be locked automatically unless one of the following operations is performed within 1 minute after pushing the request switch while the doors are locked. If during this 1-minute time period, the request switch is pushed, all doors will be locked automatically after another 1 minute.

- Opening any door (including the lift gate)
- Pushing the ignition switch

Power lift gate open

1. Carry the Intelligent Key.
2. Push the power lift gate opener switch Ⓒ.
3. The lift gate will unlock and automatically open.
4. The hazard indicator flashes 4 times and the outside chime sounds.

To close the lift gate, push the power lift gate button on the key or power lift gate

switch on the instrument panel or lower part of the lift gate. See “Lift gate” (P.3-18).

BATTERY SAVER SYSTEM

When all the following conditions are met for a period of time, the battery saver system will cut off the power supply to prevent battery discharge.

- The ignition switch is in the ACC position, and
- All doors are closed, and
- The shift lever is in the P (Park) position.

WARNING SIGNALS

To help prevent the vehicle from moving unexpectedly by erroneous operation of the Intelligent Key listed on the following chart or to help prevent the vehicle from being stolen, chime or beep sounds inside and outside the vehicle and a warning displays in the vehicle information display.

When a chime or beep sounds or the warning displays, be sure to check the vehicle and Intelligent Key.

See “Troubleshooting guide” (P.3-13) and “Vehicle information display” (P.2-22).

TROUBLESHOOTING GUIDE

Symptom		Possible cause	Action to take
When pushing the ignition switch to stop the engine	The SHIFT P warning appears on the display and the inside warning chime sounds continuously or for a few seconds.	The shift lever is not in the P (Park) position.	Shift the shift lever to the P (Park) position.
When shifting the shift lever to the P (Park) position.	The inside warning chime sounds continuously.	The ignition switch is in the ACC or ON position.	Push the ignition switch to the OFF position.
When opening the driver's door to get out of the vehicle	The inside warning chime sounds continuously.	The ignition switch is in the ACC position. The Intelligent Key is in the Intelligent Key port.	Push the ignition switch to the OFF position. Remove the Intelligent Key from the Intelligent Key port.
When closing the door after getting out of the vehicle	The NO KEY warning appears on the display, the outside chime sounds 3 times and the inside warning chime sounds for a few seconds.	The ignition switch is in the ACC or ON position.	Push the ignition switch to the OFF position.
	The SHIFT P warning appears on the display and the outside chime sounds continuously.	The ignition switch is in the ACC or OFF position and the shift lever is not in the P (Park) position.	Move the shift lever to the P (Park) position and push the ignition switch to the OFF position.
When closing the door with the inside lock knob turned to LOCK	The outside chime sounds for a few seconds and all the doors unlock.	The Intelligent Key is inside the vehicle or cargo area.	Carry the Intelligent Key with you.
When pushing the request switch or the LOCK 🔒 button on the Intelligent Key to lock the door	The outside chime sounds for a few seconds.	The Intelligent Key is inside the vehicle or cargo area.	Carry the Intelligent Key with you.
		A door is not closed securely.	Close the door securely.
When pushing the ignition switch to start the engine	The Intelligent Key system warning light in the meter blinks in green.	The battery charge is low.	Replace the battery with a new one. (See "Battery" (P.8-15).)
	The Intelligent Key system warning light in the meter blinks in yellow and the inside warning chime sounds for a few seconds.	The Intelligent Key is not in the vehicle.	Carry the Intelligent Key with you.
	The Intelligent Key system warning light in the meter illuminates in yellow.	It warns of a malfunction with the Intelligent Key system.	Contact an INFINITI retailer.

WARNING

The Intelligent Key transmits radio waves when the buttons are pushed. The FAA advises that radio waves may affect aircraft navigation and communication systems. Do not operate the Intelligent Key while on an airplane. Make sure the buttons are not operated unintentionally when the unit is stored for a flight.

It is possible to lock/unlock all doors, the lift gate, fuel-filler door, activate the panic alarm and open the windows by pushing the buttons on the Intelligent Key from outside the vehicle.

Before locking the doors, make sure the Intelligent Key is not left in the vehicle.

The LOCK/UNLOCK button on the Intelligent Key can operate at a distance of approximately 33 ft (10 m) from the vehicle. (The effective distance depends upon the conditions around the vehicle.)

As many as 4 Intelligent Keys can be used with one vehicle. For information concerning the purchase and use of additional Intelligent Keys, contact an INFINITI retailer.

The lock and unlock buttons on the Intelligent Key will not operate when:

- the distance between the Intelligent Key and the vehicle is over 33 ft (10 m).
- the Intelligent Key battery runs down.

After locking with the remote keyless entry function, pull the door handle to make sure the doors are securely locked.

The LOCK/UNLOCK operating range varies depending on the environment. To securely operate the lock and unlock buttons, approach the vehicle to about 3 ft (1 m) from the door.

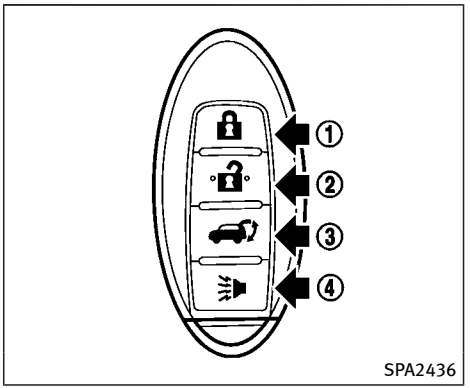

① LOCK button
② UNLOCK button
③ Power lift gate button
④ PANIC button

HOW TO USE REMOTE KEYLESS ENTRY SYSTEM

When you lock or unlock the doors or the lift gate, the hazard indicator will flash and the horn (or the outside chime) will sound as a confirmation. For details, see “Setting hazard indicator and horn mode” (P.3-16).

Locking doors and fuel-filler door

1. Move the shift lever to the P (Park) position, push the ignition switch to the OFF position and make sure you carry the Intelligent Key with you.*
2. Close all the doors and the lift gate.
3. Push the LOCK button ① on the Intelligent Key.
4. All the doors, the lift gate and fuel-filler door will lock.
5. The hazard indicator flashes twice and the horn chirps once.

*: Doors will lock with the Intelligent Key while the ignition switch is in the ACC or ON position.

Unlocking doors and fuel-filler door

1. Push the UNLOCK button ② on the Intelligent Key once.
2. The hazard indicator flashes once. The driver's door and fuel-filler door will unlock.

   The puddle light and the passenger cabin illumination will illuminate and stay on for a short period of time.
3. Push the UNLOCK button on the Intelligent Key again within 60 seconds.
4. The hazard indicator flashes once again. All the doors will unlock.

All doors will be locked automatically unless one of the following operations is performed within 1 minute after pushing the UNLOCK button on the Intelligent Key while the doors are locked. If during this 1-minute time period, the UNLOCK button on the Intelligent Key is pushed, all doors will be locked automatically after another 1 minute.

- Opening any door
- Pushing the ignition switch

Opening windows (if so equipped)

The UNLOCK button ② operation also allows you to open a window that is equipped with the automatic open function. This function will not operate while the window timer is activated or the windows need to be initialized. (See "Power windows" (P.2-59).)

To open the windows, push the UNLOCK button ② on the Intelligent Key for **about 3 seconds** after the door is unlocked.

To stop opening, release the UNLOCK button.

If the window open operation is stopped on the way while pushing the UNLOCK button, release and push the UNLOCK button again until the window opens completely.

Window cannot be closed using the Intelligent Key.

The door window can also be operated by turning the mechanical key in a door lock. (See "Doors" (P.3-4).)

Opening/closing lift gate

Opening:

1. Push the power lift gate button ③ for more than 1 second.
2. The lift gate will automatically open.

The hazard indicator flashes 4 times and the outside chime sounds.

Closing:

1. Push the power lift gate button ③.
2. The lift gate will automatically close.

If the button ③ is pushed while the lift gate is being opened or closed, the lift gate will reverse.

The power lift gate button ③ cannot be operated when the ignition switch is in

the ON position.

Using panic alarm

If you are near your vehicle and feel threatened, you may activate the alarm to call attention as follows:

1. Push the PANIC button ④ on the Intelligent Key for **more than 1 second.**
2. The theft warning alarm and headlights will stay on for 25 seconds.
3. The panic alarm stops when:
   - It has run for 25 seconds, or
   - Any of the buttons on the Intelligent Key is pushed. (Note: Panic button should be pushed for more than 1 second.)

Setting hazard indicator and horn mode

This vehicle is set in hazard indicator and horn mode when you first receive the vehicle.

In hazard indicator and horn mode, when the LOCK button ① is pushed, the hazard indicator flashes twice and the horn chirps once. When the UNLOCK button ② is pushed, the hazard indicator flashes once.

If horns are not necessary, the system can be switched to the hazard indicator mode.

In hazard indicator mode, when the LOCK button is pushed, the hazard indicator flashes twice. When the UNLOCK button is pushed, neither the hazard indicator nor the horn operates.

Hazard indicator and horn mode:

	DOOR LOCK	DOOR UNLOCK
Intelligent Key system (Using door handle or lift gate request switch)	HAZARD - **twice** OUTSIDE CHIME - **twice**	HAZARD - **once** OUTSIDE CHIME - **once**
Remote keyless entry system (Using 🔒 , 🔓 or HOLD button)	HAZARD - **twice** HORN - **once**	HAZARD - **once** HORN - none

Hazard indicator mode:

	DOOR LOCK	DOOR UNLOCK
Intelligent Key system (Using door handle or lift gate request switch)	HAZARD - **twice** OUTSIDE CHIME - **twice**	HAZARD - none OUTSIDE CHIME - **once**
Remote keyless entry system (Using 🔒 , 🔓 or HOLD button)	HAZARD - **twice** HORN - none	HAZARD - none HORN - none

Switching procedure:

To switch the hazard indicator and horn (chime) operation, push the LOCK 🔒 ① and UNLOCK 🔓 ② buttons on the Intelligent Key simultaneously for more than 2 seconds.

- When the hazard indicator mode is set, the hazard indicator flashes 3 times.
- When the hazard indicator and horn mode is set, the hazard indicator flashes once and the horn chirps once.

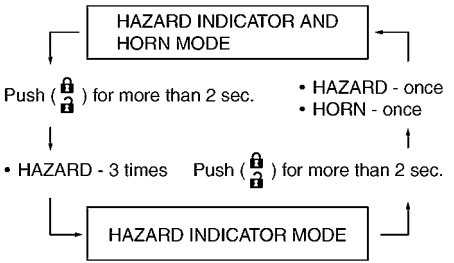

HOOD

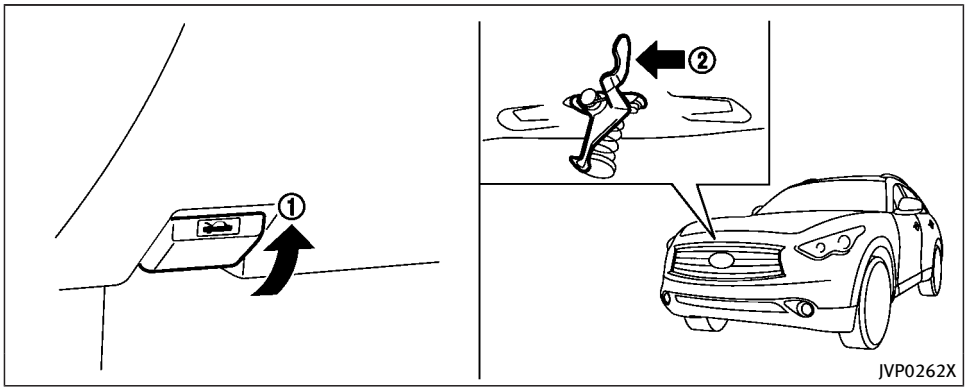

1. Pull the hood lock release handle ① located below the instrument panel; the hood will then spring up slightly.
2. Locate the lever ② in between the hood and grille, push the lever sideway with your fingertips and raise the hood.
3. When closing the hood, slowly close the hood down to latch both the right and left locks. Push the hood down to lock the hood securely into place.

WARNING

- **Make sure the hood is completely closed and latched before driving. Failure to do so could cause the hood to fly open and result in an accident.**
- **If you see steam or smoke coming from the engine compartment, to avoid injury do not open the hood.**

LIFT GATE

WARNING

- **Always be sure the lift gate has been closed securely to prevent it from opening while driving.**
- **Do not drive with the lift gate open. This could allow dangerous exhaust gases to be drawn into the vehicle. See "Exhaust gas (carbon monoxide)" (P.5-3) of this manual.**
- **Do not leave children unattended inside the vehicle. They could unknowingly activate switches or controls. Unattended children could become involved in serious accidents.**
- **Always be sure that hands and feet are clear of the door frame to avoid injury while closing the lift gate.**

OPERATING POWER LIFT GATE

To operate the power lift gate, the shift lever must be in the P (Park) position.

The power lift gate will not operate if the battery voltage is under approximately 11V.

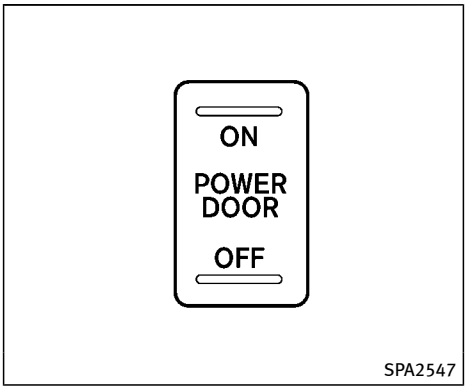

Power lift gate main switch

The power lift gate operation can be turned on or off by the power lift gate main switch on the instrument panel.

When the power lift gate main switch is in the “OFF” position, the power operation is available by the power lift gate switch on the instrument panel or the power lift gate button on the Intelligent Key.

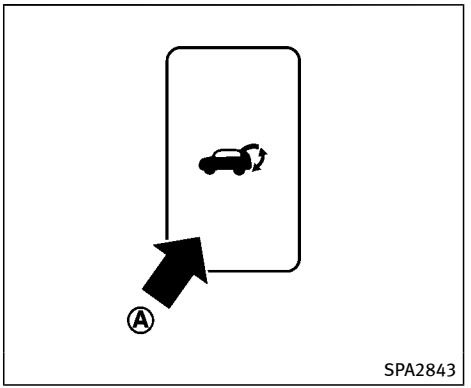

Power lift gate switch — Instrument panel

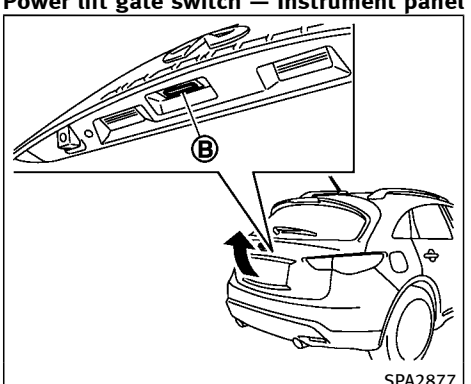

Lift gate opener switch

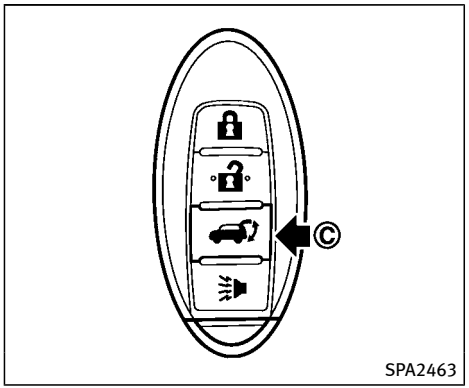

Power lift gate button — Intelligent Key

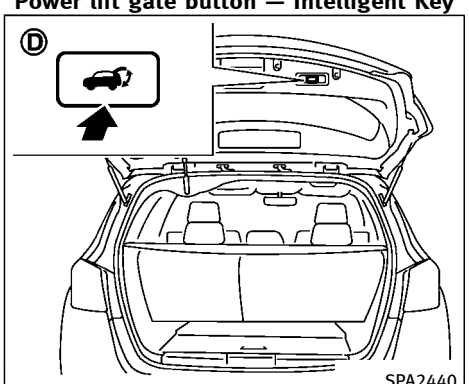

Power lift gate switch — Lift gate

Power open

When the lift gate is fully closed, the lift gate will fully open automatically by performing one of the following operations:

- Pushing the power lift gate switch Ⓐ on the instrument panel.
- Pushing the lift gate opener switch Ⓑ.
- Pushing the power lift gate button Ⓒ on the Intelligent Key for more than 1 second.

The hazard flashes 4 times and the outside chime sounds when the lift gate starts opening.

NOTE:

The lift gate can be opened by the power lift gate switch Ⓐ, the power lift gate opener switch Ⓑ or the power lift gate button Ⓒ even if the lift gate is locked. The lift gate will individually unlock and open.

Power close

When the lift gate is fully opened, the lift gate will fully close automatically by performing one of the following operations:

- Pushing the power lift gate switch Ⓐ on the instrument panel.
- Pushing the power lift gate button Ⓒ on the Intelligent Key for more than 1 second.
- Pushing the power lift gate switch Ⓓ on the lower part of the lift gate.

The hazard flashes 4 times and the outside chime sounds when the lift gate starts closing.

NOTE:

When the lift gate is closed, it remains unlocked. Manually lock the lift gate.

Reverse function

The power lift gate will reverse immediately if one of the following actions is performed during power open or power close.

- pushing the power lift gate switch Ⓐ on the instrument panel
- pushing the power lift gate button Ⓒ on the Intelligent Key

- pushing the power lift gate switch Ⓓ on the lower part of the lift gate

The outside chime sounds when the lift gate starts to reverse.

The power lift gate button Ⓒ on the Intelligent Key cannot be operated when the ignition switch is in the ON position.

Auto reverse function

The auto-reverse function enables the lift gate to automatically reverse when something is caught in the lift gate as it is opening or closing. When the control unit detects an obstacle, the lift gate will reverse and return to the full open or full close position.

If a second obstacle is detected, the lift gate motion will stop and the drive motor will disengage. The lift gate will enter the manual mode.

A pinch sensor is mounted on each side of the lift gate. If an obstacle is detected by the pinch sensor during power close, the lift gate will reverse and return to the full open position immediately.

NOTE:

If the pinch sensor is damaged or removed, the power close function will not operate.

WARNING

There is a small distance immediately before the closed position that cannot be detected. Make sure that all passengers keep their hands, etc., clear from the lift gate opening before closing the lift gate.

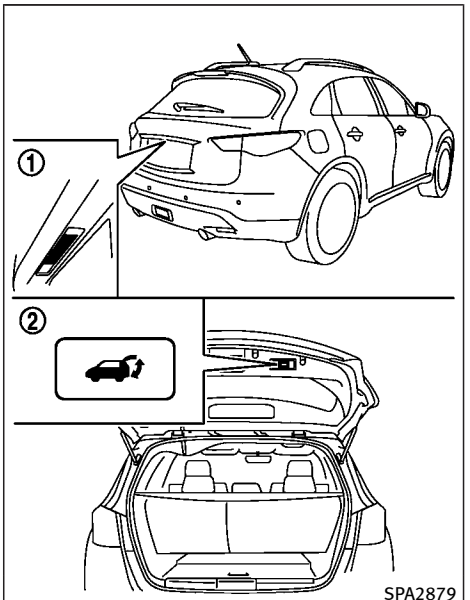

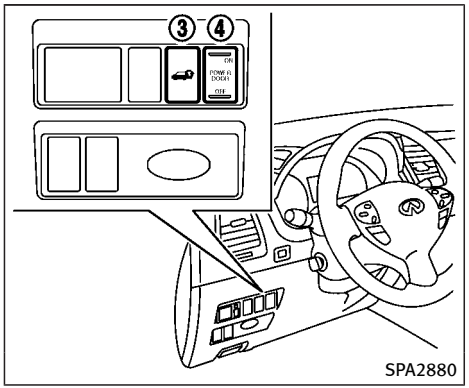

① Lift gate opener switch
② Power lift gate switch — Lift gate
③ Power lift gate switch — Instrument panel
④ Power lift gate main switch

Middle stop function

The power lift gate can be set to stop at a mid-open range. To activate the system, perform the following procedures.

1. Press the power lift gate main switch ④ to the ON position on the instrument panel.
2. Push the lift gate opener switch ① to open or close the lift gate.
3. Push lift gate opener switch again. The lift gate will stop at user selected position when lift gate is opening or closing.
4. The lift gate will fully open when the lift gate opener switch ① is pressed again.
5. The lift gate will fully close when the lift gate switch ② on the lower part of the lift gate is pressed.

Garage mode system

The garage mode system allows the lift gate to open to a user selected position. To set the garage mode system, perform the following procedures:

1. Put the shift lever in the P (Park) position.
2. Make sure the lift gate is fully closed.
3. Press the power lift gate main switch ④ to the ON position on the instrument panel.
4. Push the lift gate opener switch ①.
5. Move the lift gate manually or operate the power lift gate from the fully closed position to the user selected open position you want to set the system.
6. Push and hold the power lift gate switch ② on the lower part of the lift gate for 3 seconds to set the user selected open position. A chime will sound when setting is successful.
7. Fully close the lift gate.

The lift gate will open and stop at the user selected position.

CAUTION

- **Do not lean against a partially opened lift gate. The lift gate may close unexpectedly and may result in personal injury.**
- **If the vehicle was driven by another person, confirm the garage mode function before opening the lift gate in a location with low clearance. The lift gate can be damaged if the previous driver changed or canceled the setting.**
- **If the switch is pressed two times quickly (1 second or less) when opening the lift gate from the fully closed position, the system may not recognize the second switch press. The lift gate will continue to open. This is normal operation and does not indicate a malfunction. How-**

ever, this may result in minor personal injury if someone is behind the vehicle when the switch is activated, or damage to the lift gate.

NOTE:

- **To avoid damaging the lift gate system, do not manually force the lift gate to open or close when the lift gate is moving. When manually operating the lift gate from the full close or full open position, do not use excessive force. Using excessive force may damage the system.**
- **Do not install accessories such as bike racks onto the lift gate. The additional weight of these accessories may cause the lift gate to operate slowly or to not open completely. This is a normal operation and does not indicate a malfunction. The lift gate will operate normally when the accessory is removed.**
- **If the lift gate is opened when the vehicle is parked on a steep slope, the lift gate may not open to the expected position. This is a normal operation and does not indicate a malfunction.**
- **If the automatic lift gate is operated continuously for approximately 180 seconds, the system automatically turns off to prevent overheating. The lift gate cannot be opened using the switches. The system resets and operation returns to normal after approximately 180 seconds. This is a normal operation and does not indicate a malfunction.**
- **The lift gate may automatically reverse direction if the lift gate is operating and passengers enter/exit the vehicle. This is a normal operation and does not indicate a malfunction.**
- **The lift gate must be operated manually if the battery is disconnected or discharged.**
- **If the lift gate is not activated due to a low voltage (less than approximately 11V), operate the lift gate with the engine running.**

Manual mode

If power operation is not available, the lift gate can be operated manually. Power operation may not be available if multiple obstacles have been detected in a single power cycle or if the battery voltage is low.

When the power lift gate main switch is in the OFF position, the lift gate can be opened manually by pushing the lift gate opener switch. If the power lift gate opener switch is pushed during power open or close, the power operation will be canceled and the lift gate can be operated manually.

AUTO CLOSURE

If the lift gate is pulled down to a partly open position, the lift gate will pull itself to the closed position.

Do not apply excessive force when the auto closure is operating. Excessive force applied may cause the mechanism to malfunction.

CAUTION

- **The lift gate will automatically close from a partly open position. To avoid pinching, keep hands and fingers away from lift gate opening.**
- **Do not let children operate the lift gate.**

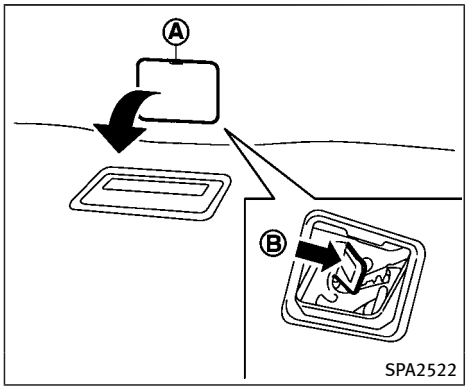

LIFT GATE RELEASE LEVER

If the lift gate cannot be opened with the door lock switch due to a discharged battery, follow these steps.

1. Remove the cover Ⓐ inside of the lift gate using a suitable tool.
2. Move the lever Ⓑ as illustrated to open the lift gate.

Contact an INFINITI retailer as soon as possible for repair.

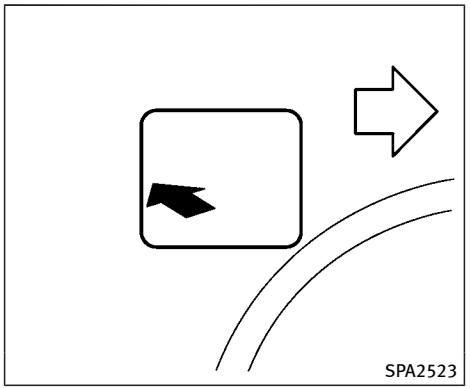

OPENING THE FUEL-FILLER DOOR

To open the fuel-filler door, unlock the fuel-filler door by using one of the following operations, then push the left side of the door.

- Push the driver's door handle request switch with the Intelligent Key carried with you.
- Push the passenger's door handle request switch or lift gate request switch twice with the Intelligent Key carried with you.
- Push the UNLOCK button on the Intelligent Key.
- Insert the mechanical key into the door lock cylinder and turn it to the rear of the vehicle.
- Push the power door lock switch to the UNLOCK position.

To lock, close the fuel-filler door securely and lock all doors by operating the door handle request switch, the LOCK button on the Intelligent Key, the mechanical key or the power door lock switch.

FUEL-FILLER CAP

WARNING

- **Gasoline is extremely flammable and highly explosive under certain conditions. You could be burned or seriously injured if it is misused or mishandled. Always stop engine and do not smoke or allow open flames or sparks near the vehicle when refueling.**
- **Do not attempt to top off the fuel tank after the fuel pump nozzle shuts off automatically. Continued refueling may cause fuel overflow, resulting in fuel spray and possibly a fire.**
- **Use only an original equipment type fuel-filler cap as a replacement. It has a**

built-in safety valve needed for proper operation of the fuel system and emission control system. An incorrect cap can result in a serious malfunction and possible injury. It could also cause the malfunction indicator light to come on.

- Never pour fuel into the throttle body to attempt to start your vehicle.
- Do not fill a portable fuel container in the vehicle or trailer. Static electricity can cause an explosion of flammable liquid, vapor or gas in any vehicle or trailer. To reduce the risk of serious injury or death when filling portable fuel containers:
  - Always place the container on the ground when filling.
  - Do not use electronic devices when filling.
  - Keep the pump nozzle in contact with the container while you are filling it.
  - Use only approved portable fuel containers for flammable liquid.

CAUTION

- If fuel is spilled on the vehicle body, flush it away with water to avoid paint damage.
- Insert the cap straight into the fuel-filler tube, then tighten until a single click is heard. Failure to tighten the fuel-filler cap properly may cause the malfunction indicator light (MIL) to illuminate. If the light illuminates because the fuel-filler cap is loose or missing, tighten or install the cap and continue to drive the vehicle. The light should turn off after a few driving trips. If the light does not turn off after a few driving trips, have the vehicle inspected by an INFINITI retailer.

  For additional information, see “Malfunction Indicator Light (MIL)” (P.2-20).
- The LOOSE FUEL CAP warning will appear if the fuel-filler cap is not properly tightened. It may take a few driving trips for the message to be displayed. Failure to tighten the fuel-filler cap properly after the LOOSE FUEL CAP warning appears may cause the Malfunction Indicator Light (MIL) to illuminate.

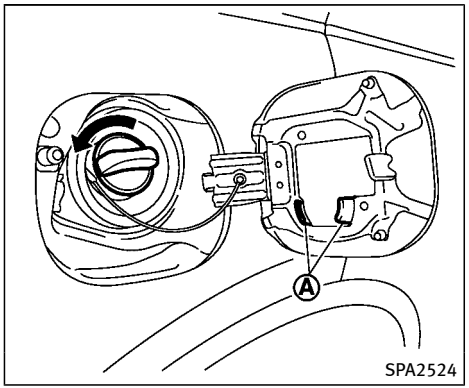

To remove the fuel-filler cap:

1. Turn the fuel-filler cap counterclockwise to remove.
2. Put the fuel-filler cap on the cap holder Ⓐ while refueling.

To install the fuel-filler cap:

1. Insert the fuel-filler cap straight into the fuel-filler tube.
2. Turn the fuel-filler cap clockwise until a single click is heard.

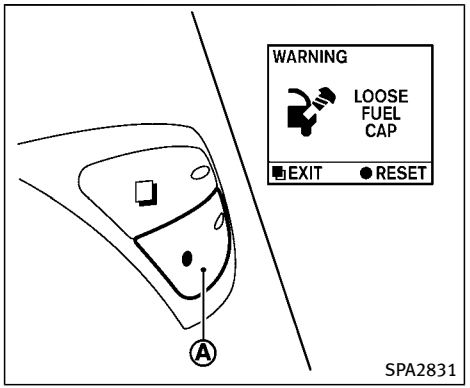

LOOSE FUEL CAP warning

The LOOSE FUEL CAP warning appears on the vehicle information display when the fuel-filler cap is not tightened correctly after the vehicle has been refueled. It may take a few driving trips for the message to be displayed. To turn off the warning, perform the following steps:

1. Remove and install the fuel-filler cap as soon as possible. (See “FUEL-FILLER CAP”.)
2. Tighten the fuel-filler cap until a single click is heard.
3. Push the reset switch Ⓐ on the right side of the combination meter for about 1 second to turn off the LOOSE FUEL CAP warning after tightening the fuel cap.

WARNING

- **Do not adjust the steering wheel while driving. You could lose control of your vehicle and cause an accident.**
- **Do not adjust the steering wheel any closer to you than is necessary for proper steering operation and comfort. The driver's air bag inflates with great force. If you are unrestrained, leaning forward, sitting sideways or out of position in any way, you are at greater risk of injury or death in a crash. You may also receive serious or fatal injuries from the air bag if you are up against it when it inflates. Always sit back against the seatback and as far away as practical from the steering wheel. Always use the seat belts.**

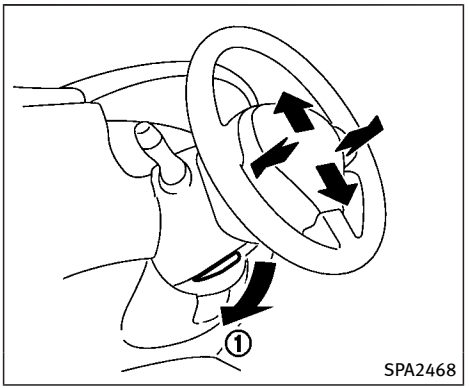

MANUAL OPERATION (if so equipped)

Tilt or telescopic operation

Pull the lock lever ① down and adjust the steering wheel up, down, forward or rearward to the desired position.

Push the lock lever up securely to lock the steering wheel in place.

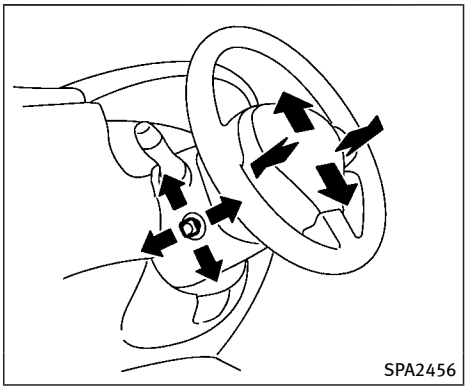

ELECTRIC OPERATION (if so equipped)

Tilt or telescopic operation

Move the lever to adjust the steering wheel up or down, forward or rearward to the desired position.

Entry/Exit function operation:

The automatic drive positioner system will make the steering wheel move up automatically when the driver's door is opened with the ignition switch in the LOCK position. This lets the driver get into and out of the seat more easily.

SUN VISORS

For more information, see “Automatic drive positioner” (P.3-32).

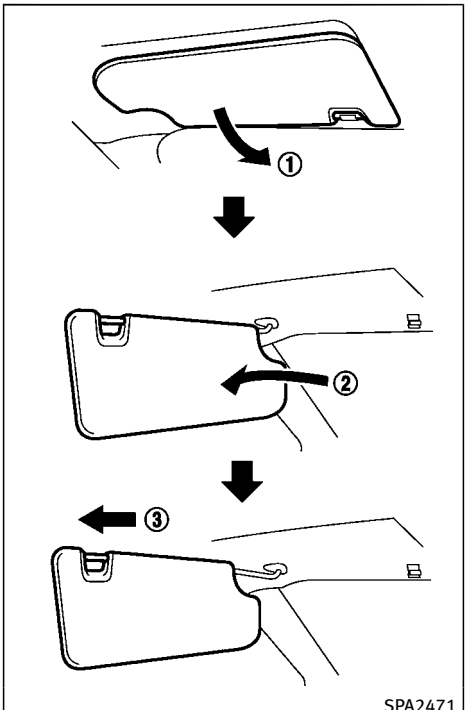

1. To block glare from the front, swing down the main sun visor ①.
2. To block glare from the side, remove the main sun visor from the center mount and swing the visor to the side ②.
3. Slide the sun visor ③ in or out as needed.

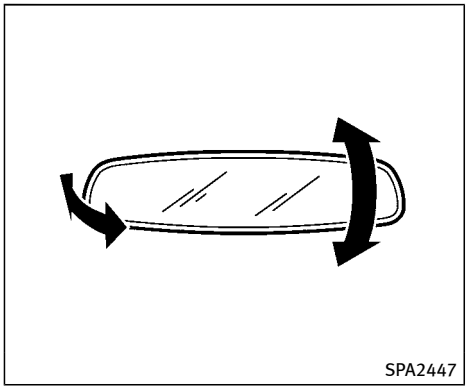

INSIDE MIRROR

Adjust the height and the angle of the inside mirror to the desired position.

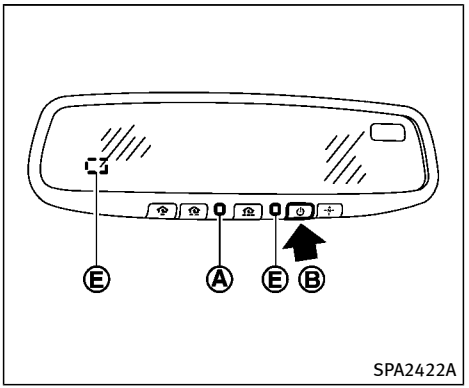

Type A

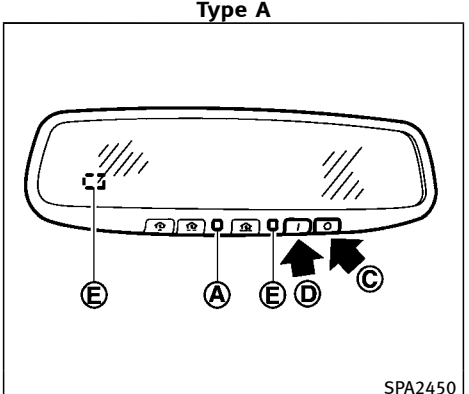

Type B

Automatic anti-glare type

The inside mirror is designed so that it automatically changes reflection according to the intensity of the headlights of the following vehicle.

The anti-glare system will be automatically turned on when the ignition switch is pushed to the ON position.

When the anti-glare system is turned on, the indicator light Ⓐ will illuminate and excessive glare from the headlights of the vehicle behind you will be reduced.

Type A: Push the ⏻ switch Ⓑ to make the inside rearview mirror operate normally and the indicator light will turn off. Push the ⏻ switch again to turn the system on.

Type B: Push the "○" switch Ⓒ to make the inside rearview mirror operate normally. The indicator light will turn off. Push the "I" switch Ⓓ to turn the system on.

Do not allow any object to cover the sensors Ⓔ or apply glass cleaner on them. Doing so will reduce the sensitivity of the sensor, resulting in improper operation.

For the compass (if so equipped) operation, see "Compass" (P.2-10).

For the HomeLink® Universal Transceiver operation, see “HomeLink® Universal Transceiver” (P.2-66).

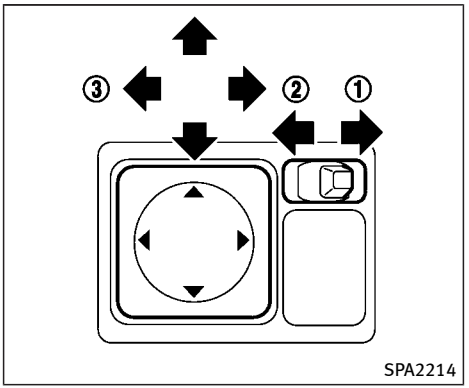

OUTSIDE MIRRORS

WARNING

Objects viewed in the outside mirror on the passenger side are closer than they appear. Be careful when moving to the right. Using only this mirror could cause an accident. Use the inside mirror or glance over your shoulder to properly judge distances to other objects.

Adjusting outside mirrors

The outside mirror control switch is located at the lower part of the instrument panel.

The outside mirror will operate only when the ignition switch is in the ACC or ON position.

Move the switch right ① or left ② to select the right or left side mirror, then adjust ③ using the control switch.

Defrosting outside mirrors

The outside mirrors will be heated when the rear window defroster switch is operated. (See “Rear window and outside mirror defroster switch” (P.2-38).)

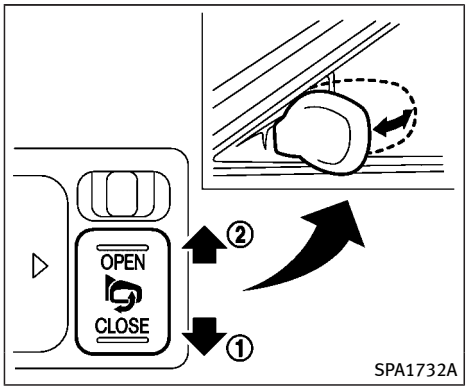

Foldable outside mirrors

CAUTION

- **Do not touch the mirrors while they are moving. Your hand may be pinched, and the mirror may malfunction.**
- **Do not drive with the mirrors stored. You will be unable to see behind the vehicle.**
- **If the mirrors were folded or unfolded by hand, there is a chance that the mirror will move forward or backward during driving. If the mirrors were folded or unfolded by hand, be sure to adjust them again electrically before driving.**

The outside rearview mirror remote control operates when the ignition switch is in the “ACC” or “ON” position.

To fold the outside rearview mirrors, push the outside rearview mirror folding switch to the “CLOSE” position ①. To unfold, push to the “OPEN” position ②.

If mirrors are manually operated or bumped, the mirror body can become loose at the pivot point. To correct electronic mirror operation, cycle mirrors by pushing the "CLOSE" switch until closed, the push "OPEN" until mirror is in the open position.

Reverse tilt-down feature (if so equipped)

When backing up the vehicle, the right or left outside mirror will turn downward automatically to provide better rear visibility.

1. Push the ignition switch to the ON position.
2. Move the shift lever to the R (Reverse) position.
3. Select the right or left side mirror by operating the outside mirror control switch.
4. The selected outside mirror surface moves downward.

When one of the following conditions has occurred, the selected outside mirror surface will return to its original position.

- The shift lever is moved to any position other than R (Reverse).
- The outside mirror control switch is set to the center position.
- The ignition switch is pushed to the OFF position.

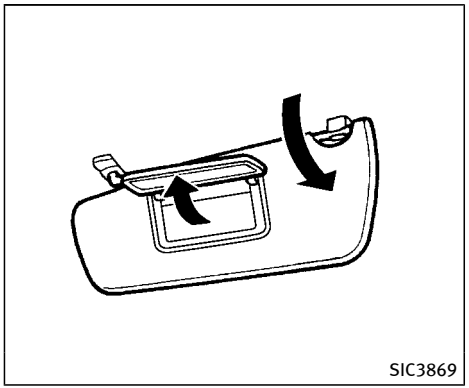

VANITY MIRROR

To use the front vanity mirror, pull down the sun visor and pull up the cover.

AUTOMATIC DRIVE POSITIONER (if so equipped)

The automatic drive positioner system has three features:

- Entry/exit function
- Seat synchronization function
- Memory storage

ENTRY/EXIT FUNCTION

This system is designed so that the driver's seat and steering column will automatically move when the automatic transmission shift lever is in the P (Park) position. This allows the driver to get into and out of the driver's seat more easily.

The driver's seat will slide backward and the steering wheel will move up when the driver's door is opened with the ignition switch in the OFF position.

The driver's seat and steering wheel will return to the previous positions when one of the following is operated:

- When the ignition switch is pushed to the ACC position after the driver's door is closed.
- When the ignition switch is pushed to the ON position.

The driver's seat will not return to the previous positions if the seat or steering adjusting switch is operated when the seat is at the exit position.

Cancel or activate entry/exit function

The shift lever must be in the P (Park) position with the ignition switch in the OFF position.

The entry/exit function can be activated or canceled by pressing and holding the SET switch for more than 10 seconds.

The indicator lights on the memory switches (1 and 2) will blink once when the function is canceled, and the indicator lights will blink twice when the function is activated. Note that the indicator lights may illuminate after 5 seconds while holding the SET switch. This indicates readiness for linking the Intelligent Key to a stored memory position. Keep the SET switch pressed for more than 10 seconds to turn on or off the entry/exit function.

The entry/exit function can also be activated or canceled if the "Lift Steering Wheel on Exit" key or "Slide Driver Seat Back on Exit" key is turned to ON or OFF in the "Comfort" settings. (See "Vehicle information and settings" (P.4-9).)

Initialize entry/exit function

If the battery cable is disconnected, or if the fuse opens, the entry/exit function will not work though this function was set on before. In such a case, after connecting the battery or replacing with a new fuse, open and close the driver's door more than two times after the ignition switch is turned from the ON position to the LOCK position. The entry/exit function will be activated.

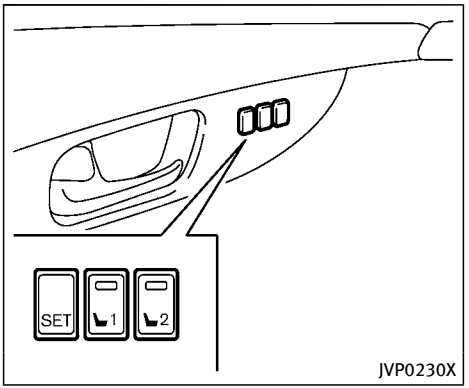

SEAT SYNCHRONIZATION FUNCTION

The seat synchronization function automatically adjusts the positions of the steering wheel and outside mirrors when the seat is adjusted using the power seat switches.

However, the steering wheel and outside mirrors will not move if the seat is adjusted over the maximum thresholds. The system considers that the steering wheel and outside mirror adjustments are not necessary because the seat may not be adjusted for the driving position. Note that the function is set to disabled as the factory default setting.

The seat synchronization function operates under the following conditions:

- The ignition switch is in the ON position.
- The shift lever is in the P (Park) position.

If the outside mirrors or the steering wheel reaches its maximum adjustment, the function is automatically disabled. Restart the function by selecting a previously stored seat memory position using the memory switches (1 or 2). An Intelligent Key that was previously linked to the stored seat memory can also be used to restart the function.

If a seat position was not previously stored in the seat memory, restart the function by adjusting the steering wheel and outside mirrors manually for your best driving position and then drive the vehicle above 4 MPH (7 km/h).

Cancel or activate seat synchronization function

The shift lever must be in the P (Park) position with the ignition switch in the ACC position.

The seat synchronization function can be activated or canceled by pushing and holding the SET switch for more than 10

seconds while the ignition switch is in the ACC position.

The indicator lights on the memory switches (1 and 2) will blink once when the function is canceled, and the indicator lights will blink twice when the function is activated. Note that the indicator lights may illuminate after 5 seconds while holding the SET switch. This indicates readiness for linking the Intelligent Key to a stored memory position. Keep the SET switch pushed for more than 10 seconds to turn on or off the seat synchronization function.

MEMORY STORAGE

Two positions for the driver's seat, steering column and outside mirrors can be stored in the automatic drive positioner memory. Follow these procedures to use the memory system.

1. Move the shift lever to the P (Park) position.
2. Adjust the driver's seat, steering column and outside mirrors to the desired positions by manually operating each adjusting switch. For additional information, see "Seat belts" (P.1-12) and "Tilt/telescopic steering" (P.3-27) and "Outside mirrors" (P.3-30).
3. Push the SET switch and, within 5 seconds, push the memory switch (1 or 2) fully for at least 1 second.

   The indicator light for the pushed memory switch will stay on for approximately 5 seconds after pushing the switch.

   When the memory is stored in the memory switch (1 or 2), a buzzer will sound.

   If memory is stored in the same memory switch, the previous memory will be deleted.

Linking Intelligent Key to a stored memory position

The Intelligent Key can be linked to a stored memory position with the following procedure.

1. Follow the steps for storing a memory position.
2. While the indicator light for the memory switch being set is illuminated for 5 seconds, push the 🔓 button on the Intelligent Key. If the indicator light blinks, the Intelligent Key is linked to that memory setting.

   Push the ignition switch to the OFF position, and then push the 🔓 button on the Intelligent Key. The driver's seat, steering wheel and outside mirrors will move to the memorized position or to the exit position when the entry/exit function is set to active.

Confirming memory storage

- Push the ignition switch to the ON position and push the SET switch. If the main memory has not been stored, the indicator light will come on for approximately 0.5 second. When the memory has stored in position, the indicator light will stay on for approximately 5 seconds.
- If the battery cable is disconnected, or if the fuse opens, the memory will be canceled. In this case, reset the desired position using the previous procedure.
- If optional Intelligent Keys are added to your vehicle, the memory storage procedure to switch 1 or 2 and linking Intelligent Key procedure to a stored memory position should be performed again for each Intelligent Key. For additional Intelligent Key information, see "Keys" (P.3-2).

Selecting the memorized position

1. Move the shift lever to the P (Park) position.
2. Use one of the following methods to move the driver's seat, the outside mirrors and the steering wheel.
   - Push the memory switch (1 or 2) fully for at least 1 second.
   - Within 45 seconds of opening the driver's door, push the memory switch (1 or 2) fully for at least 1 second.

   The driver's seat, steering column and outside mirrors will move to the memorized position or to the exit position when the entry/exit function is set to active with the indicator light flashing, and then the light will stay on for approximately 5 seconds.

SYSTEM OPERATION

The automatic drive positioner system will not work or will stop operating under the following conditions:

- When the vehicle speed is above 4 MPH (7 km/h).
- When the adjusting switch for the driver's seat and steering column is turned on while the automatic drive positioner is operating.
- When the memory switch 1 or 2 is not pushed for at least 1 second.
- When the seat, steering column and outside mirrors have already been moved to the memorized position.
- When no position is stored in the memory switch.
- When the engine is started while moving the automatic drive positioner.
- When the AT shift lever is moved from the P (Park) position to any other position. (However, it will not be canceled if the switch is pushed while the seat and steering column are returning to the previous positions (entry/exit function).)
- When the driver's door remains open for more than 45 seconds and the ignition switch is not in the ON position.
- The seat synchronization function is automatically disabled if the outside mirrors or steering wheel reaches its maximum adjustment.
- The seat synchronization function will not operate if the seat is adjusted over one of the following maximum thresholds:
  - Seat sliding: 3.0 in (76 mm)
  - Seatback reclining: 9.1 degrees
  - Seat lifter (rear side): 0.8 in (20 mm)

MEMO

4 Monitor, climate, audio, phone and voice recognition systems

Safety note 4-3
Center multi-function control panel 4-3
How to use INFINITI controller 4-5
How to use touch screen (models with navigation system) 4-5
Menu options (models with navigation system) 4-7
How to select menus on the screen 4-8
Vehicle information and settings 4-9
How to use STATUS button 4-9
How to use brightness control and display ON/OFF button 4-9
How to use INFO button 4-9
How to use SETTING button 4-15
RearView Monitor (models without navigation system) 4-24
How to read displayed lines 4-25
How to park with predictive course lines 4-26
Difference between predictive and actual distances 4-27
Predictive course line settings 4-30
How to adjust screen 4-30
Operating tips 4-30
Around View Monitor (AVM) (models with navigation system) 4-31
Available views 4-32
Difference between predictive and actual distances 4-37
How to switch the display 4-39
Camera aiding corner sonar function 4-40
Moving Object Detection (MOD) 4-41
How to adjust the screen view 4-44
Around View Monitor settings 4-44
Operating tips 4-46
Ventilators 4-47
Automatic climate control 4-48
Automatic climate control 4-49
Operating tips 4-51
In-cabin microfilter 4-51
Servicing climate control 4-51
Audio system 4-52
Audio operation precautions 4-52
FM-AM-SAT radio with Compact Disc (CD) player 4-66
DVD (Digital Versatile Disc) player operation (models with navigation system) 4-70

USB (Universal Serial Bus) Connection Port.... 4-74
Bluetooth® streaming audio (models with navigation system)..... 4-79
iPod® player operation..... 4-83
CD/DVD/USB memory care and cleaning..... 4-86
Steering-wheel-mounted controls for audio.... 4-87
Antenna 4-88
Car phone or CB radio 4-89
Bluetooth® Hands-Free Phone System (models with navigation system) 4-90
Regulatory information..... 4-91
Voice commands..... 4-91
Control buttons..... 4-92
Connecting procedure 4-92
Phone selection 4-93
Quick Dial 4-93
Making a call 4-95
Receiving a call..... 4-96
During a call 4-97
Phone setting..... 4-98
Troubleshooting guide 4-99
Bluetooth® Hands-Free Phone System (models without navigation system)..... 4-100
Regulatory information 4-101
Control buttons 4-102
Voice Recognition System..... 4-102
Pairing procedure 4-107
Phonebook registration 4-108
Making a call..... 4-109
Receiving a call 4-109
During a call..... 4-109
Phone operation..... 4-110
Speaker adaptation mode..... 4-113
INFINITI Voice Recognition System (models with navigation system)..... 4-115
INFINITI Voice Recognition Standard Mode..... 4-115
Using the system..... 4-118
INFINITI Voice Recognition Alternate Command Mode 4-127
Using the system..... 4-135
Troubleshooting guide..... 4-140

SAFETY NOTE

WARNING

- **Do not disassemble or modify this system. If you do, it may result in accidents, fire, or electric shock.**
- **Do not use this system if you notice any abnormality, such as a frozen screen or lack of sound. Continued use of the system may result in accident, fire or electric shock.**
- **In case you notice any foreign object in the system hardware, spill liquid on it, or notice smoke or smell coming from it, stop using the system immediately and contact your nearest INFINITI retailer. Ignoring such conditions may lead to accidents, fire, or electric shock.**
- **Park the vehicle in a safe location and apply the parking brake to view the images on the front center display screen.**

Do not attempt to operate the system in extreme temperature conditions [below –4°F (–20°C) and above 158°F (70°C)]. Operating this system under these conditions may result in system malfunctions.

CENTER MULTI-FUNCTION CONTROL PANEL

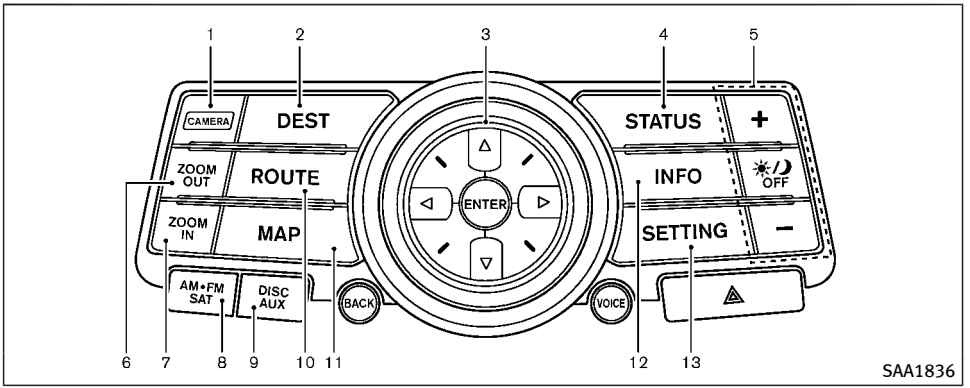

Models with navigation system

1. **"CAMERA"** Around View Monitor display button (P.4-31)

2, 6, 7, 10, 11.
For navigation system control buttons (Refer to the separate Navigation System Owner's Manual.)

3. INFINITI controller (P.4-5)
4. **"STATUS"** status display button (P.4-9)
5. **"☀/☽ OFF"** brightness control and display ON/OFF button (P.4-9)
8. **"AM·FM·SAT"** band selector button (P.4-52)
9. **"DISC·AUX"** selector button (P.4-52)
12. **"INFO"** vehicle and navigation information button (P.4-9)
13. **"SETTING"** button (P.4-15)

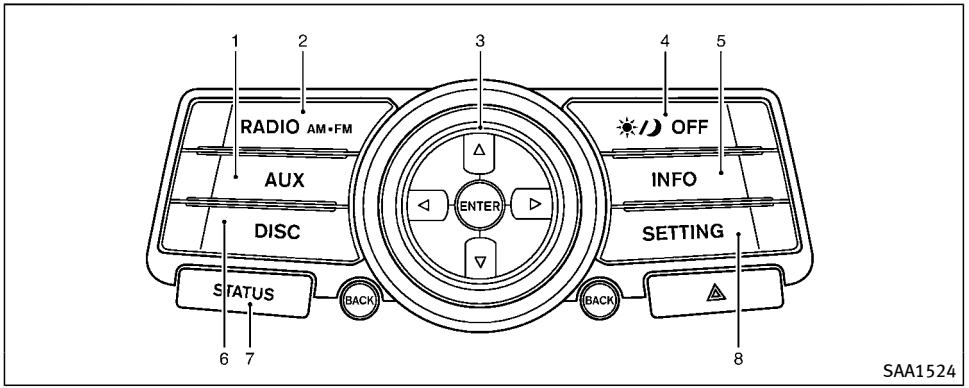

Models without navigation system

1. **"AUX"** button (P.4-52)
2. **"RADIO AM·FM"** band selector button (P.4-52)
3. INFINITI controller (P.4-5)
4. **"☀/☽ OFF"** brightness control and display ON/OFF button (P.4-9)
5. **"INFO"** vehicle information button (P.4-9)
6. **"DISC"** selector button (P.4-52)
7. **"STATUS"** status display button (P.4-9)
8. **"SETTING"** button (P.4-15)

When you use this system, make sure the engine is running.

If you use the system with the engine not running (ignition ON or ACC) for a long time, it will use up all the battery power, and the engine will not start.

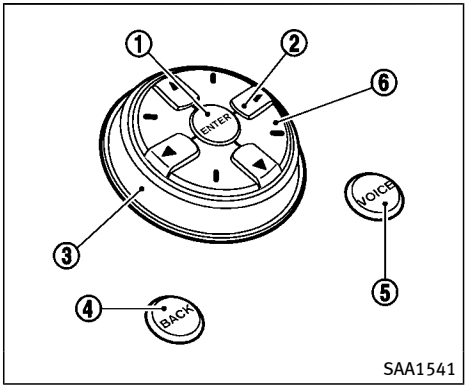

Models with navigation system

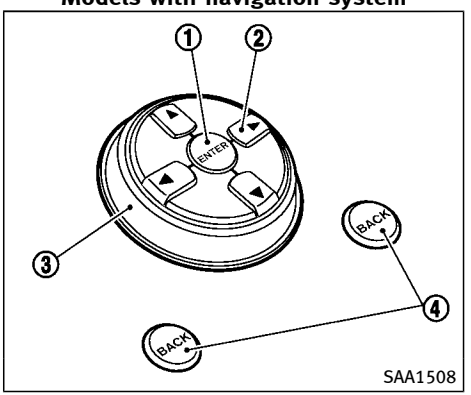

Models without navigation system

HOW TO USE INFINITI CONTROLLER

Choose an item on the display using the main directional buttons ② (or additional directional buttons ⑥ models with navigation system) or center dial ③, and push the **ENTER** button ① for operation.

If you push the **BACK** button ④ before the setup is completed, the setup will be canceled and/or the display will return to the previous screen. This button can also be used to delete characters that have been input.

After the setup is completed, push the **BACK** button ④ and return to the previous screen.

For the **VOICE** button ⑤ functions, refer to the separate Navigation System Owner's Manual.

HOW TO USE TOUCH SCREEN (models with navigation system)

CAUTION

- **The glass screen on the liquid crystal display may break if it is hit with a hard or sharp object. If the glass screen breaks, do not touch it. Doing so could result in an injury.**
- **To clean the display, use a soft, dry cloth. If additional cleaning is necessary, use a small amount of neutral detergent with a soft cloth. Never use a rough cloth, alcohol, benzine, thinner or any kind of solvent or paper towel with a chemical cleaning agent. They will scratch or deteriorate the panel.**
- **Do not splash any liquid such as water or car fragrance on the display. Contact with liquid will cause the system to malfunction.**

To ensure safe driving, some functions cannot be operated while driving.

The on-screen functions that are not available while driving will be "grayed out" or muted.

Park the vehicle in a safe location and then operate the navigation system.

WARNING

- **ALWAYS give your full attention to driving.**
- **Avoid using vehicle features that could distract you. If distracted, you could lose control of your vehicle and cause an accident.**

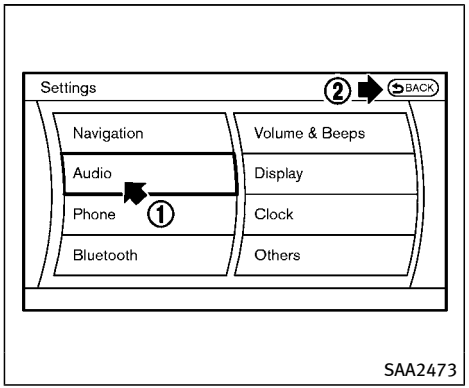

Example

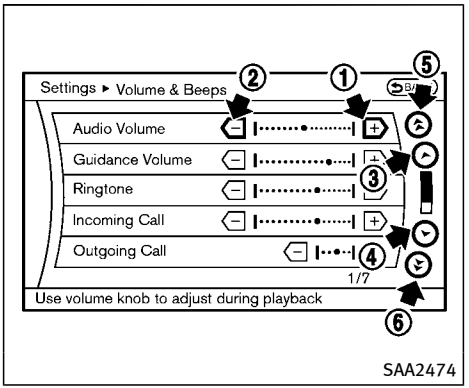

Example

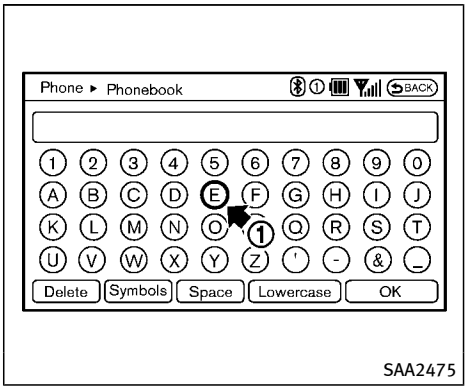

Example

Touch screen operation

With this system, the same operations as those for the INFINITI controller are possible using the touch screen operation.

Selecting the item:

Touch an item to select it. To select the "Audio" settings, touch the "Audio" area ① on the screen.

Touch the BACK ② button to return to the previous screen.

Adjusting an item:

Touch the **+** ① or **–** ② button to adjust the settings.

Touch the ⌃ ③ or ⌄ ④ button to move to the previous or next item.

Touch the ⌃⌃ ⑤ or ⌄⌄ ⑥ button to move to the previous or next page.

Inputting characters:

Touch the letter or number ①.

There are some options available when inputting characters.

- **Uppercase:**
  Shows uppercase characters.
- **Lowercase:**
  Shows lowercase characters.
- **Symbols:**
  Shows symbols such as the question mark (?).
- **Space:**
  Inserts a space.

- **Delete:**
  Deletes the last character that has been input with one touch. Push and hold the button to delete all of the characters.
- **OK:**
  Completes character inputs.

Touch screen maintenance

If you clean the display screen, use a dry, soft cloth. If additional cleaning is necessary, use a small amount of neutral detergent with a soft cloth. Never spray the screen with water or detergent. Dampen the cloth first, and then wipe the screen.

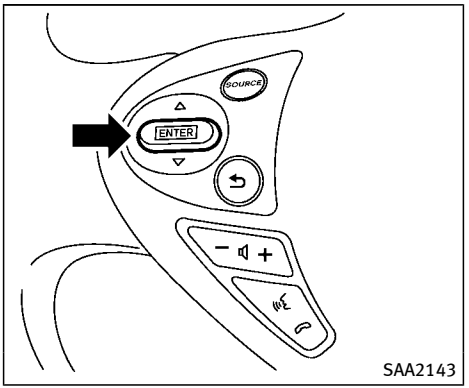

MENU OPTIONS (models with navigation system)

The start menu can be displayed using the menu control switch on the steering-wheel-mounted controls.

1. While the MAP or STATUS screen is displayed, push and hold the menu control switch until the “Menu Options” screen appears.
2. Highlight the preferred item by tilting the menu control switch up or down, and then push the menu control switch to select it.

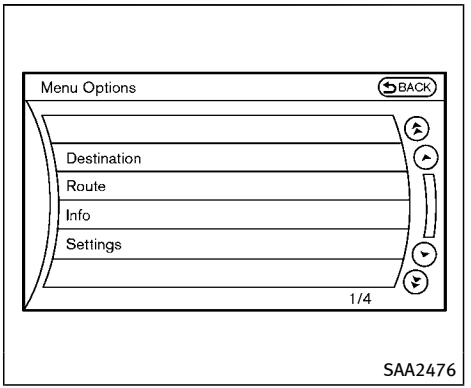

Available items

Destination/Route:

These items are for the navigation system. See the separate Navigation System Owner’s Manual for details.

Info:

Displays the information screen. It is the same screen that appears when you push the INFO button.

Settings:

Displays the settings screen. It is the same screen that appears when you push the **SETTING** button.

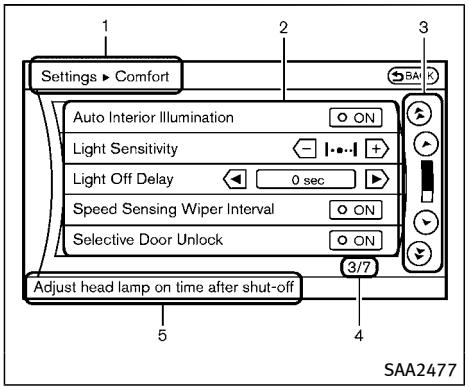

Models with navigation system

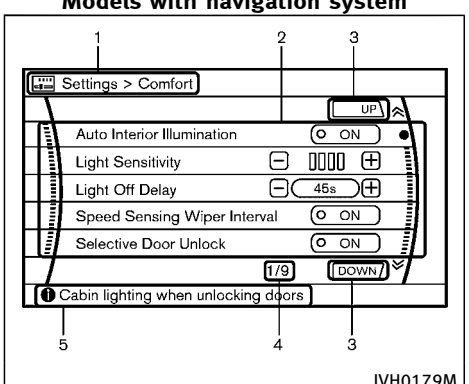

Models without navigation system

HOW TO SELECT MENUS ON THE SCREEN

Vehicle functions are viewed on the display screen in menus. To select each key item, highlight the preferred item using the INFINITI controller and push the ENTER button.

Whenever a menu selection is made or menu item is highlighted, different areas on the screen provide you with important information. See the following for details.

1. Header:

   Shows the path used to get to the current screen.

2. Menu Selections:

   Shows the options to choose within that menu screen.

3. UP/DOWN Movement indicator:

   Shows that the INFINITI controller may be used to move UP/DOWN on the screen and select more options.

4. Menu Items Counter:

   Shows the total number of items listed across all pages for the current menu.

5. Footer/Information Line:

   Provides more information (if available) about the menu selection currently highlighted.

HOW TO USE STATUS BUTTON

You can check information related to the audio, climate control system, fuel consumption and navigation system (if so equipped) by pressing the STATUS button repeatedly.

HOW TO USE BRIGHTNESS CONTROL AND DISPLAY ON/OFF BUTTON

Push the "☀/☽ OFF" button to switch the display brightness to the daytime mode or the nighttime mode, and to adjust the display brightness using the INFINITI controller while the indicator is displayed at the bottom of the screen.

Push and hold the "☀/☽ OFF" button for more than 2 seconds to turn the display off. Push the button again to turn the display on.

Models with navigation system

The display brightness can also be adjusted using the brightness UP button **(+)** or brightness DOWN button **(–)**.

HOW TO USE INFO BUTTON

The display screen shows vehicle and navigation (if so equipped) information for your convenience.

The information shown on the screen should be a guide to determine the condition of the vehicle. See the following for details.

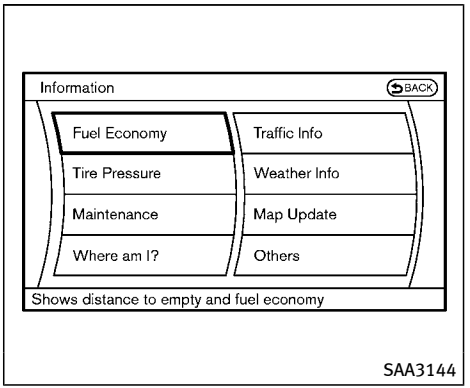

Models with navigation system

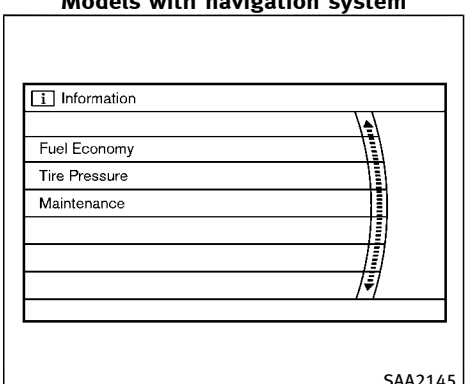

Models without navigation system

1. Push the INFO button on the control panel.
2. Select an item from the INFO menu.
3. After viewing or adjusting the information on the following screens, push the BACK button to return to the INFO menu.

See the separate Navigation System Owner's Manual for the following items:

- Where am I?
- Traffic Info
- Weather Info
- Map Update
- Navigation Version

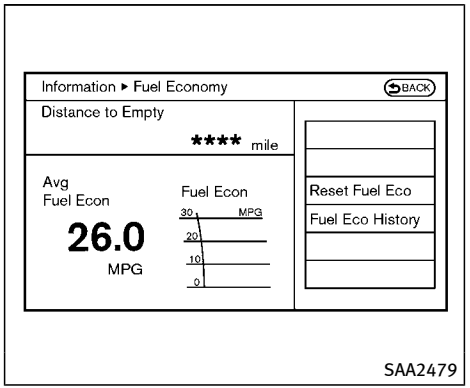

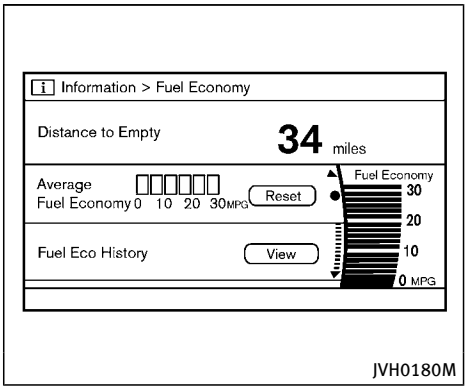

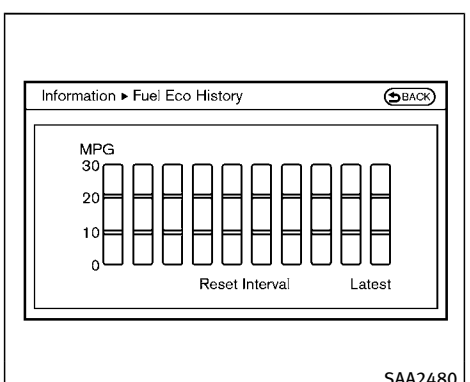

Models with navigation system

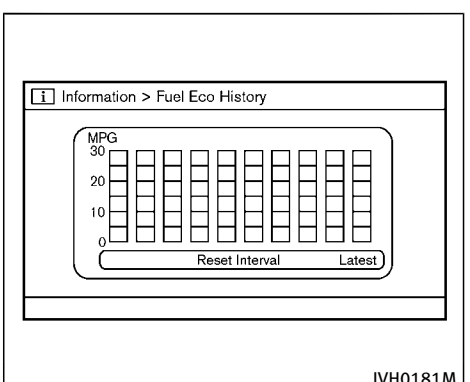

Models without navigation system

Fuel Economy information

The approximate distance to empty, average fuel economy and current fuel economy will be displayed for reference.

To reset the average fuel economy (Avg Fuel Econ), select the “Reset Fuel Eco” or “Reset” key.

If the “Fuel Eco History” or “View” key is selected, the average fuel consumption history will be displayed in graph form along with the average for the previous Reset-to-Reset period.

The unit can be converted between “US” and “Metric”. (See “How to use SETTING button” (P.4-15).)

The fuel economy information may differ from the information displayed on the vehicle information display. This is due to the timing difference in updating the information and does not indicate a malfunction.

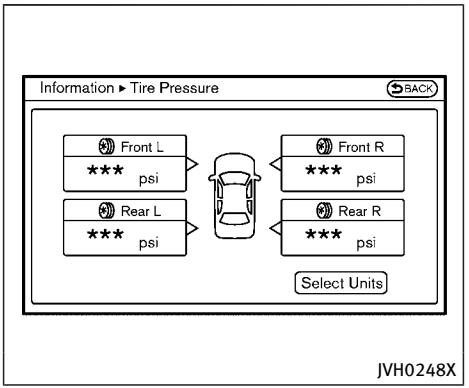

Models with navigation system

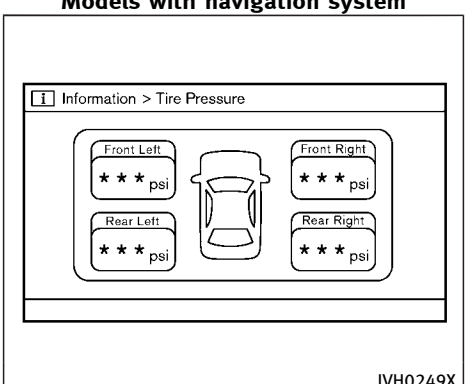

Models without navigation system

Tire Pressure information

WARNING

- **When a spare tire is mounted or a wheel is replaced, tire pressure will not be indicated, the TPMS will not function and the low tire pressure warning light will flash for approximately 1 minute. The light will remain on after 1 minute. Contact your INFINITI retailer as soon as possible for tire replacement and/or system resetting.**
- **Replacing tires with those not originally specified by INFINITI could affect the proper operation of the TPMS.**

The tire pressure will be displayed for reference.

The pressure indication “*** kPa” or “*** psi” on the screen means that the pressure is being measured. After a few driving trips, the pressure for each tire will be displayed.

The unit can be converted in the LANGUAGE & UNITS settings display. (See “How to use SETTING button” (P.4-15) for details.)

To change the measurement units, select

the “Select Units” key (models with navigation system) with the INFINITI controller and push the **ENTER** button.

In case of low tire pressure, LOW PRESSURE information will be displayed on the screen. Check the pressure of all tires.

Tire pressure rises and falls depending on the heat caused by the vehicle’s traveling condition and the temperature.

After tire rotation is performed, tire pressure will not be displayed in the actual tire position. Drive the vehicle at over 25 MPH (40 km/h) for approximately 10 minutes to reset the display.

For more details about the Tire Pressure Monitoring System (TPMS), see “Tire Pressure Monitoring System (TPMS)” (P.5-4).

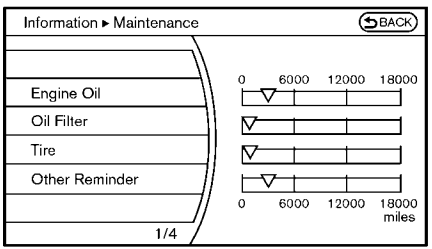

SAA2481

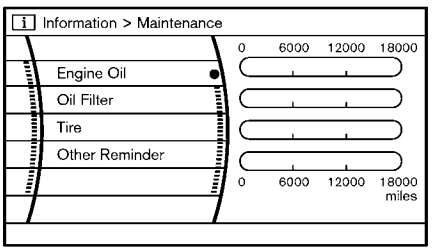

JVH0183M

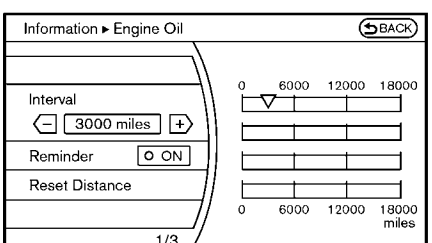

SAA2482

Models with navigation system

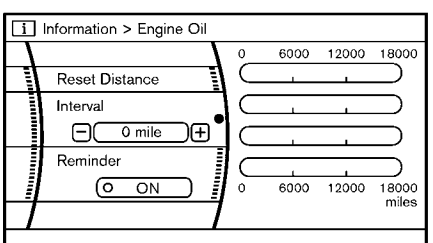

JVH0184M

Models without navigation system

Maintenance information

The maintenance intervals can be displayed for the engine oil, oil filter, tire and other reminders.

To set a maintenance interval, select a preferred item from the list.

You can also set to display a message to remind you that the maintenance needs to be performed.

The following example shows how to set the engine oil maintenance information. Use the same steps to set the other maintenance information.

1. Set the interval (mileage) of the maintenance schedule. To determine the recommended maintenance interval, refer to your “INFINITI Service and Maintenance Guide”.
2. To display the reminder automatically when the desired distance is reached, select the “Reminder” key.
3. Reset the driving distance to the new maintenance schedule.
4. To return to the previous screen, push the BACK button.

The unit can be converted between “US” and “Metric”. (See “How to use SETTING button” (P.4-15).)

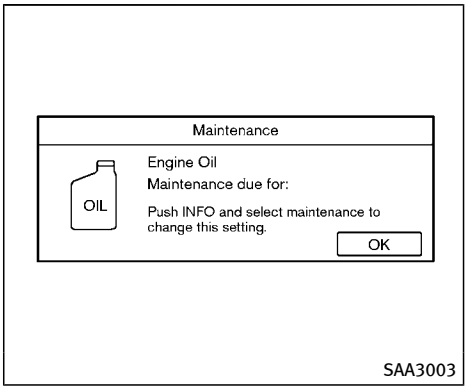

Example

The Reminder will be automatically displayed when the specified distance has been driven and every time the ignition switch is pushed to the ACC or ON position. The reminder will not appear while driving.

Select the “OK” key to hide the reminder for the rest of the current drive.

To stop the reminder from appearing, perform one of the following actions:

- Select the “Reset Distance”.
- Deactivate the “Reminder”.
- Increase the “Interval” distance to be more than the current distance being tracked.

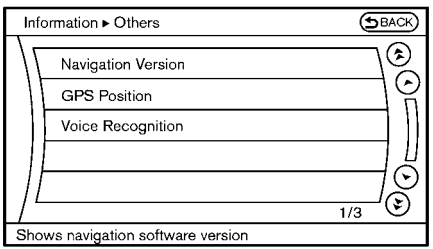

SAA3145

Others information (models with navigation system)

The Others information display will appear when pushing the INFO button and selecting the “Others” key.

Navigation Version:

For the details of this item, see the separate Navigation System Owner’s Manual.

When the ignition switch is in the ignition position, the “Navigation Version” key is displayed after pushing the INFO button.

GPS Position:

For the details of this item, see the separate Navigation System Owner’s Manual.

Voice Recognition:

For the details of this item, see “INFINITI Voice Recognition System (models with navigation system)” (P.4-115).

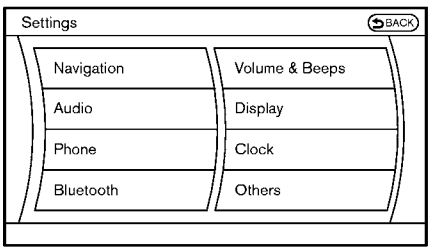

SAA2484

Models with navigation system

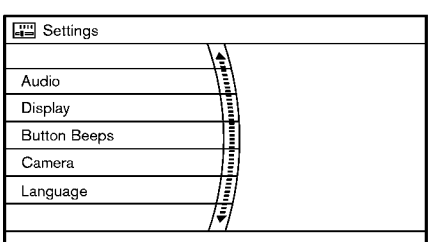

SAA2604

Models without navigation system

HOW TO USE SETTING BUTTON

The display as illustrated will appear when the **SETTING** button is pushed.

Designs and items displayed on the screen may vary depending on the models.

For navigation settings, refer to the separate Navigation System Owner's Manual.

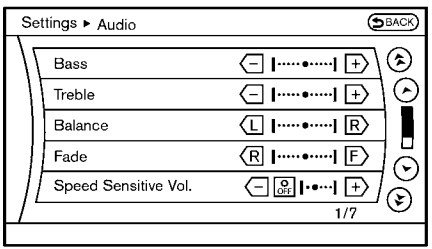

SAA2485

Models with navigation system

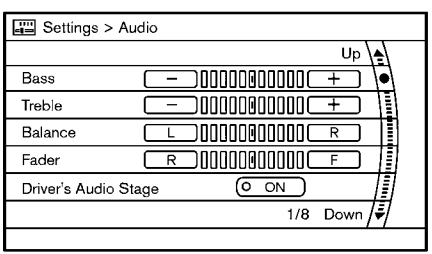

SAA2618

Models without navigation system

Audio settings

The display as illustrated will appear when pushing the **SETTING** button and selecting the "Audio" key.

Bass/Treble/Balance/Fade:

To adjust the speaker tone quality and sound balance, select the "Bass", "Treble", "Balance" or "Fade" key and adjust it with the INFINITI controller.

These items can also be adjusted by pushing and turning the AUDIO knob.

Speed Sensitive Vol.:

The audio system's volume is increased with the vehicle speed. Select the "Speed Sensitive Vol." and adjust the effect level with the INFINITI controller. The Speed Sensitive Volume function is turned off when the level is set to OFF. Increasing the value will cause the volume to increase faster with vehicle speed.

Driver's Audio Stage (if so equipped):

When this feature is turned to ON, better sound will be provided to the driver's position. The driver can enjoy a more crisp and clear sound that is specialized for the driver's position. The effect of this feature depends on the type of music that is

played. For some music, it may be difficult to realize the effect of this feature.

DivX® Registration Code (models with navigation system):

The registration code for a device that is used to download DivX® files will be displayed on the screen. If a disc is loaded or a USB memory is connected to the audio system, this function will not be activated.

Display Album Cover Art (models with navigation system):

When this item is turned to ON, the album cover image is displayed when playing compressed music files through a CD, DVD or USB device. When the image is not properly embedded in the file or device, the image will not be displayed.

Phone settings (models with navigation system)

For details of the “Phone” settings, see “Bluetooth® Hands-Free Phone System (models with navigation system)” (P.4-90).

Bluetooth settings (models with navigation system)

For details of the “Bluetooth” settings, see “Bluetooth® Hands-Free Phone System (models with navigation system)” (P.4-90).

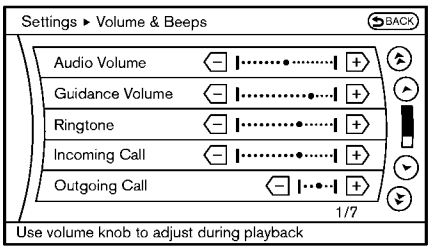

SAA2554

Volume and Beeps settings (models with navigation system)

The display as illustrated will appear when pushing the **SETTING** button, selecting the “Volume & Beeps” key.

Audio Volume:

To increase or decrease the audio volume, select the “Audio Volume” and adjust it with the INFINITI controller. You can also adjust the audio volume by turning the VOLUME control knob.

Guidance Volume:

To adjust the guidance voice volume, select the “Guidance Volume” and adjust it with the INFINITI controller.

Ringtone/Incoming Call/Outgoing Call:

For the details of these items, see “Bluetooth® Hands-Free Phone System (models with navigation system)” (P.4-90).

Switch Beeps:

When this item is turned to ON, you will hear a beep sound when you use a button.

Guidance Voice:

When this item is turned to ON, you will hear voice guidance in the navigation operation or in other operations.

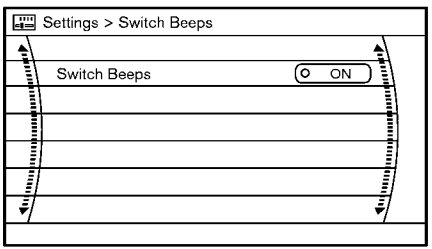

JVH0176M

Switch Beeps settings (models without navigation system)

The “Switch Beeps” screen will appear when pushing the **SETTING** button, selecting the “Switch Beeps” key with the INFINITI controller and pushing the **ENTER** button.

Switch Beeps:

When this item is turned to ON, you will hear a beep sound when you use a button.

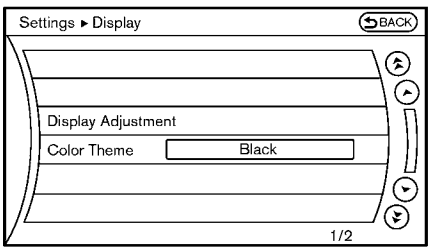

SAA2486

Display settings (models with navigation system)

The display as illustrated will appear when pushing the **SETTING** button and selecting the “Display” key.

Display Adjustment:

To adjust the display settings, select the “Display Adjustment” key. The following settings are available.

- Display

To turn off the screen, push the ENTER button and turn the “Display” indicator off. The other method is to push and hold the “☀/☽ OFF” button for more than 2 seconds.

When any mode button is pushed with the screen off, the screen turns on for further operation. The screen will turn off automatically 5 seconds after the operation is finished.

To turn on the screen, set this item to the ON position, or push and hold the "☀/☽ OFF" button.

- Brightness/Contrast/Background Color

To adjust the brightness and contrast of the screen, select the "Brightness" or "Contrast" key.

You can then adjust the brightness and contrast using the INFINITI controller.

For information on the "Background Color" key, refer to the separate Navigation System Owner's Manual.

Color Theme:

Choose the theme color of the menu screen.

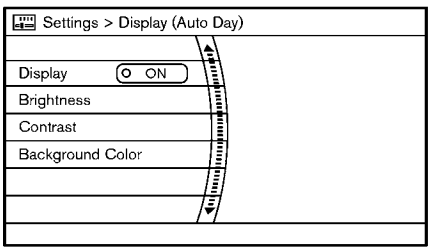

SAA2115

DISPLAY settings (models without navigation system)

The "Display" screen will appear when pushing the **SETTING** button, selecting "Display" key with the INFINITI controller and pushing the **ENTER** button.

Display:

To turn off the screen, push the **ENTER** button and turn the "ON" indicator off.

When any mode button is pushed with the screen off, the screen turns on for further operation. The screen will turn off automatically 5 seconds after the operation is finished.

To turn on the screen, set this item to the "ON" position or push the "☀/☽ OFF" button.

Brightness/Contrast/Background Color:

To adjust the brightness, contrast and background color of the screen, select the appropriate "Brightness", "Contrast" or "Background Color" key and push the **ENTER** button.

You can then adjust the brightness and contrast using the INFINITI controller. Switch the background color to the daytime mode or the nighttime mode by pushing the **ENTER** button.

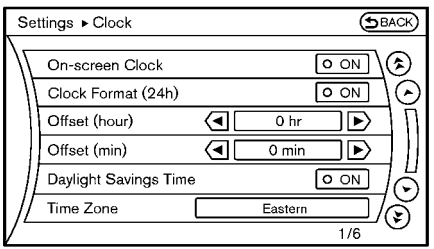

SAA2487

Clock settings (models with navigation system)

The display as illustrated will appear when pushing the **SETTING** button and selecting the “Others” key, and then selecting the “Clock” key.

The clock settings display cannot be operated while driving. Stop the vehicle in a safe place and apply the parking brake before setting the clock.

On-screen Clock:

When this item is turned to ON, a clock is always displayed in the upper right corner of the screen.

This clock will indicate the time almost exactly because it is always adjusted by the GPS system (models with navigation system).

Clock Format (24h):

When this item is turned to ON, the 24-hour clock is displayed. When this item is not turned to ON, the 12-hour clock is displayed.

Offset (hour)/(min):

Adjust the time by increasing or decreasing per hour or per minute.

Daylight Saving Time:

Turn this item to ON for daylight saving time application.

Time Zone:

Choose the time zone from the following

- Pacific
- Mountain
- Central
- Eastern
- Atlantic
- Newfoundland
- Hawaii
- Alaska

CAMERA settings

The “CAMERA” screen will appear when pushing the **SETTING** button, selecting the “Camera” key with the INFINITI controller and pushing the **ENTER** button.

For the details about the camera system operation, see “RearView Monitor (models without navigation system)” (P.4-24) or “Around View Monitor (AVM) (models with navigation system)” (P.4-31).

Driver Assistance settings (if so equipped)

For the details of the “Driver Assistance” settings, see the following items:

- “Lane Departure Prevention (LDP) system” (P.5-25).
- “Distance Control Assist (DCA) system” (P.5-55).

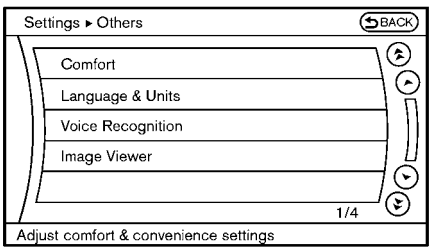

SAA2489

Example

Others settings (models with navigation system)

The Others settings display will appear when pushing the **SETTING** button and selecting the “Others” key.

The following items are available:

- Comfort
- Clock
- Language & Units
- Voice Recognition
- Camera
- Image Viewer

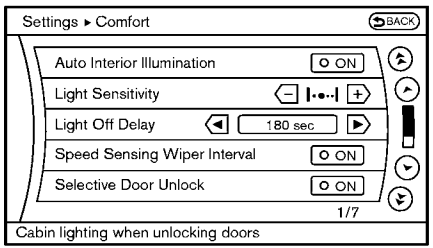

SAA2488

Models with navigation system

Comfort settings

The display illustrated will appear when pushing the **SETTING** button, selecting the “Others” key and then selecting the “Comfort” key. This key does not appear on the display until the ignition switch is pushed to the ON position.

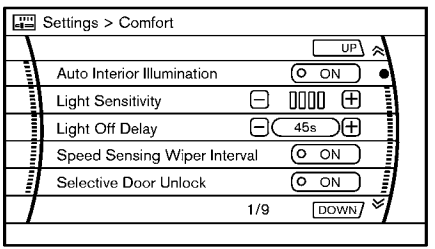

JVH0292M

Models without navigation system

The display illustrated will appear when pushing the **SETTING** button and selecting the “Comfort” key. This key does not appear on the display until the ignition switch is pushed to the ON position.

Auto Interior Illumination:

When this item is turned to ON, the interior lights will illuminate if any door is unlocked.

Light Sensitivity:

Adjust the sensitivity of the automatic headlights higher (right) or lower (left).

Lift Steering Wheel on Exit (if so equipped):

When this item is turned on, the steering wheel moves upward for easy exit if the ignition switch is in the LOCK position and the driver's door is opened. After getting into the vehicle and pushing the ignition switch to the ACC position, the steering wheel moves to the previous position.

Slide Driver Seat Back on Exit (if so equipped):

When this item is turned on, the driver's seat moves backward for easy exit if the ignition switch is in the OFF position and the driver's door is opened. After getting into the vehicle and pushing the ignition switch to the ACC position, the driver's seat moves to the previous position.

Light Off Delay:

Choose the duration of the automatic headlight off timer from 0, 30, 45, 60, 90, 120, 150 and 180 second periods.

Speed Sensing Wiper Interval (if so equipped):

When this item is turned to ON, the wiper interval is adjusted automatically according to the vehicle speed.

Selective Door Unlock:

When this item is turned to ON, only the driver's door is unlocked first after the door unlock operation. When the door handle request switch on the driver's or front passenger's side door is pushed to be unlocked, only the corresponding door is unlocked first. All the doors can be unlocked if the door unlock operation is performed again within 60 seconds.

When this item is turned to OFF, all the doors will be unlocked after the door unlock operation is performed once.

Intelligent Key Lock/Unlock:

When this item is turned to ON, door lock/unlock function by pushing the door handle request switch will be activated.

Return All Settings to Default:

Select this item and then select "YES" to return all settings to the default.

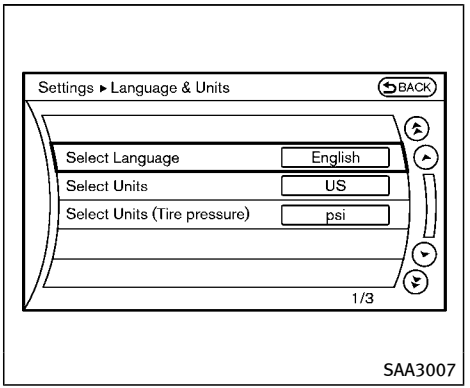

Models with navigation system

Language & Units settings

The display illustrated will appear when pushing the **SETTING** button, selecting the "Others" key and then selecting the "Language & Units" key.

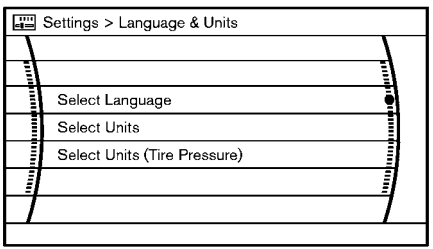

JVH0252X

Models without navigation system

The display illustrated will appear when pushing the **SETTING** button and selecting the “Language & Units” key.

Select Language:

Select the “Select Language” key. Choose “English”, “Français” or “Español” for your favorite display appearance.

If you select the “Français” key, the French language will be displayed, so please use the French Owner’s Manual. To obtain a French Owner’s Manual, see “Owner’s Manual/Service Manual order information” (P.9-32).

Select Units:

Select the “Select Units” key. Choose “US” (Mile, °F, MPG) or “Metric” (km, °C, L/100 km) for your favorite display appearance.

Select Units (Tire Pressure):

Choose the “Select Units (Tire Pressure)” key and push the ENTER button. From the following display, select “kPa” or “psi”.

*When the ignition switch is in the ACC position, the “Select Units (Tire Pressure)” key is not displayed.

Voice Recognition settings (models with navigation system)

For details about the “Voice Recognition” settings, see “INFINITI Voice Recognition System (models with navigation system)” (P.4-115).

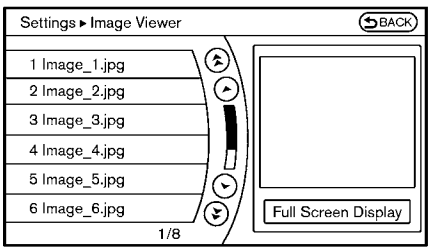

SAA2491

Image Viewer (models with navigation system)

The image files in the USB memory will be displayed. To display the Image Viewer, push the **SETTING** button, select the “Other” key and then select the “Image Viewer” key. The image of the selected file is displayed on the right side of the screen.

When a number of folders are included in the USB memory, select a folder from the list to display the file list.

Images will not be shown on the display while the vehicle is in any drive position to reduce driver distraction. To view images,

stop the vehicle in a safe location and apply the parking brake.

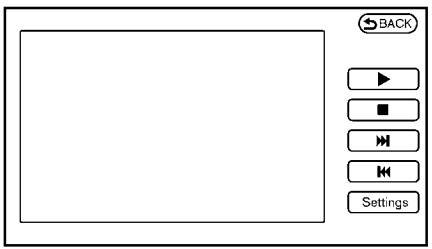

SAA2492

Full Screen Display:

The full screen display will appear when selecting the “Full Screen Display” key.

To operate the Image Viewer or to change the settings, select the desired key using the INFINITI controller.

- (Start)
  Select the “” key to start playing the slideshow.
- (Stop)
  Select the “” key to stop the slideshow.
- (Next)
  Select the “” key to display the next file.
- (Previous)
  Select the “” key to display the previous file.

Setting the Image Viewer:

The Image Viewer setting display will appear when selecting the “Settings” key on the full screen display. The following settings are available for the full screen display.

- Slideshow Speed
  Select the “Slideshow Speed” key. From the following display, select the changing time from 5, 10, 30, 60 seconds or “No Auto Change”.
- Slideshow Order
  Select the “Slideshow Order” key. From the following display, select “Random” or “Order List”. For “Order List”, the image order is the order of the files as stored on the USB memory.

Operating tips:

- Only files that meet the following conditions will be displayed.
  — Image type: JPEG
  — File Extensions: *.jpg, *jpeg

— Maximum Resolution: 2048 × 1536 pixels
— Maximum Size: 2-MB
— Colors: 32768 (15-bit)
— Maximum File Name lengths: 253-Bytes
— Maximum Folders: 500
— Maximum Images per Folder: 1024

- If an electronic device (such as a digital camera) is directly connected to the vehicle using a USB cable, no image will be displayed on the screen.
- If the file name is too long, some file names may not be entirely displayed.
- When the total number of characters in the file name exceeds 100 or if 1 file name in a directory exceeds 100 characters, all files will show a shortened 8-character version. The image will still be displayed when selected.

REARVIEW MONITOR (models without navigation system)

The system is designed as an aid to the driver in situations such as slot parking or parallel parking.

When the shift lever is shifted into the R (Reverse) position, the monitor display shows the view to the rear of the vehicle.

WARNING

Failure to follow the warnings and instructions for proper use of the RearView Monitor could result in serious injury or death.

- **The RearView Monitor is a convenience but it is not a substitute for proper backing. Always turn and look out the windows, and check mirrors to be sure that it is safe to move before operating the vehicle. Always back up slowly.**
- **The system is designed as an aid to the driver in showing large stationary objects directly behind the vehicle, to help avoid damaging the vehicle.**
- **The system cannot completely eliminate blind spots and may not show every object.**
- **Underneath the bumper and the corner areas of the bumper cannot be viewed on the RearView Monitor because of its monitoring range limitation. The system will not show small objects below the bumper, and may not show objects close to the bumper or on the ground.**
- **Objects viewed in the RearView Monitor differ from actual distance because a wide-angle lens is used.**
- **Objects in the RearView Monitor will appear visually opposite than when viewed in the rear view and outside mirrors.**
- **Make sure that the lift gate is securely closed when backing up.**
- **Underneath the bumper and the corner areas of the bumper cannot be viewed on the RearView Monitor because of its monitoring range limitation.**
- **Do not put anything on the rearview camera. The rearview camera is installed above the license plate.**
- **When washing the vehicle with high-pressure water, be sure not to spray it around the camera. Otherwise, water may enter the camera unit causing water condensation on the lens, a malfunction, fire or an electric shock.**
- **Do not strike the camera. It is a precision**

instrument. Otherwise, it may malfunction or cause damage resulting in a fire or an electric shock.

CAUTION

Do not scratch the camera lens when cleaning dirt or snow from the front of the camera.

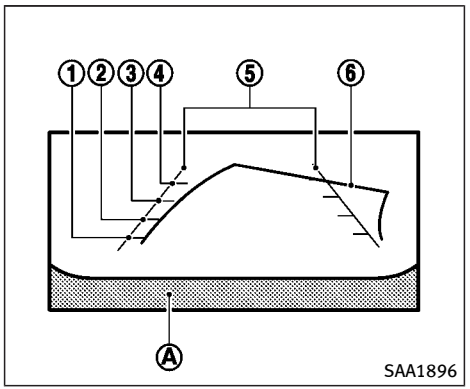

HOW TO READ DISPLAYED LINES

Guiding lines which indicate the vehicle width and distances to objects with reference to the bumper line Ⓐ are displayed on the monitor.

Distance guide lines:

Indicate distances from the bumper.

- Red line ①: approx. 1.5 ft (0.5 m)
- Yellow line ②: approx. 3 ft (1 m)
- Green line ③: approx. 7 ft (2 m)
- Green line ④: approx. 10 ft (3 m)

Vehicle width guide lines ⑤:

Indicate the vehicle width when backing up.

Predictive course lines ⑥:

Indicate the predictive course when backing up. The predictive course lines will be displayed on the monitor when the shift lever is in the R (Reverse) position and the steering wheel is turned. The predictive course lines will move depending on how much the steering wheel is turned and will not be displayed while the steering wheel is in the neutral position.

The vehicle width guide lines and the width of the predictive course lines are wider than the actual width and course.

WARNING

- **Always turn and check that it is safe to park your car before backing up. Always back up slowly.**
- **If the tires are replaced with different sized tires, the predictive course line may not be displayed correctly.**
- **On a snow-covered or slippery road, there may be a difference between the predictive course line and the actual course line.**

- **The displayed lines will appear slightly off to the right because the rearview camera is not installed in the rear center of the vehicle.**
- **The distance guide line and the vehicle width guide line should be used as a reference only when the vehicle is on a level paved surface. The distance viewed on the monitor is for reference only and may be different than the actual distance between the vehicle and displayed objects.**
- **When backing up the vehicle up a hill, objects viewed in the monitor are further than they appear. When backing up the vehicle down a hill, objects viewed in the monitor are closer than they appear. Use the inside mirror or glance over your shoulder to properly judge distances to other objects.**

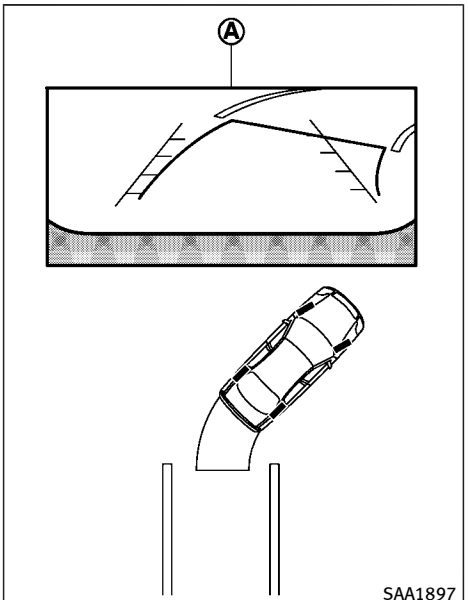

HOW TO PARK WITH PREDICTIVE COURSE LINES

1. Visually check that the parking space is safe before parking your vehicle.
2. The rearview of the vehicle is displayed on the screen Ⓐ as illustrated when the shift lever is moved to the R (Reverse) position.

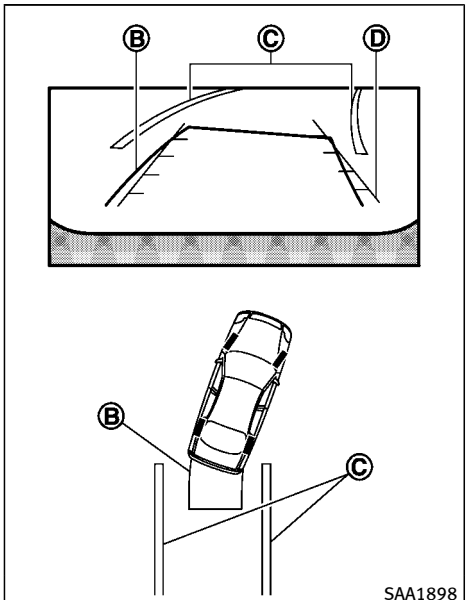

3. Slowly back up the vehicle adjusting the steering wheel so that the predictive course lines Ⓑ enter the parking space Ⓒ.
4. When the back of the vehicle enter the parking space Ⓒ, maneuver the steering wheel to make the vehicle width guide lines Ⓓ parallel to the parking space Ⓒ.
5. When the vehicle is parked in the space completely, move the shift lever to the "P" (Park) position and apply the parking brake.

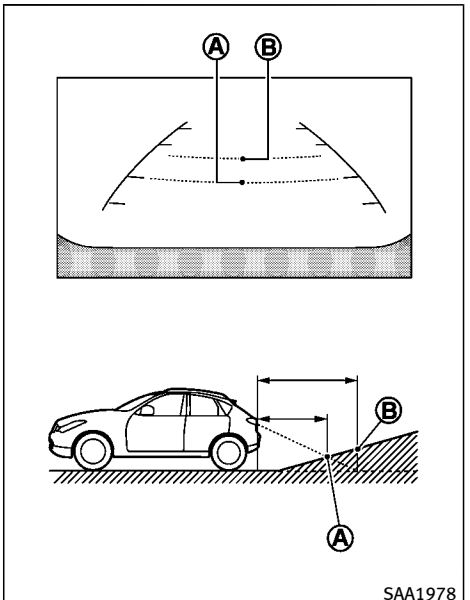

DIFFERENCE BETWEEN PREDICTIVE AND ACTUAL DISTANCES

Backing up on a steep uphill

When backing up the vehicle up a hill, the distance guide lines and the vehicle width guide lines are shown closer than the

actual distance. For example, the display shows 3 ft (1 m) to the place Ⓐ, but the actual 3 ft (1 m) distance on the hill is the place Ⓑ. Note that any object on the hill is further than it appears on the monitor.

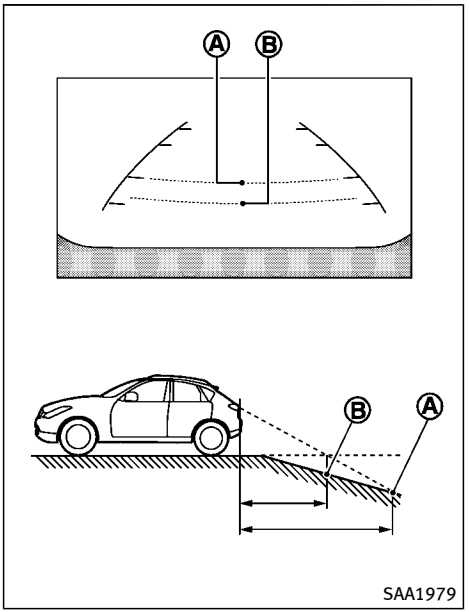

Backing up on a steep downhill

When backing up the vehicle down a hill, the distance guide lines and the vehicle width guide lines are shown further than the actual distance. For example, the display shows 3 ft (1 m) to the place Ⓐ, but the actual 3 ft (1 m) distance on the hill is the place Ⓑ. Note that any object on the hill is closer than it appears on the monitor.

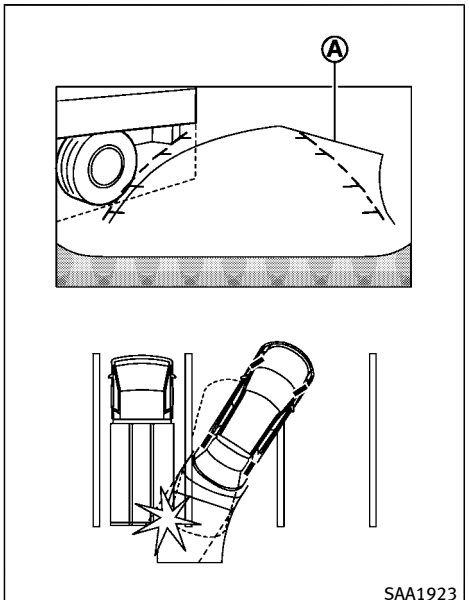

Backing up near a projecting object

The predictive course lines Ⓐ do not touch the object in the display. However, the vehicle may hit the object if it projects over the actual backing up course.

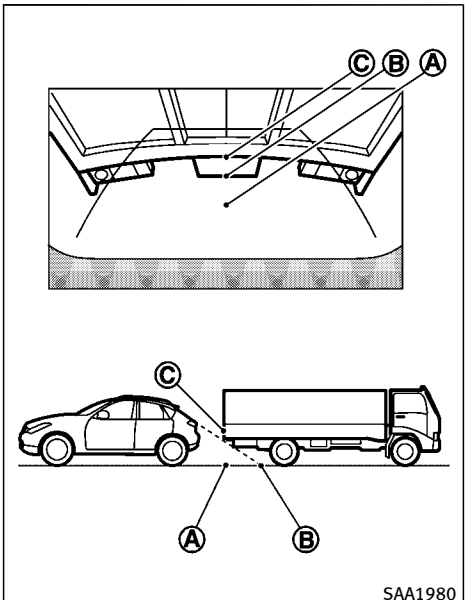

Backing up behind a projecting object

The position Ⓒ is shown further than the position Ⓑ in the display. However, the position Ⓒ is actually at the same distance as the position Ⓐ. The vehicle may hit the object when backing up to the position Ⓐ if the object projects over the actual backing up course.

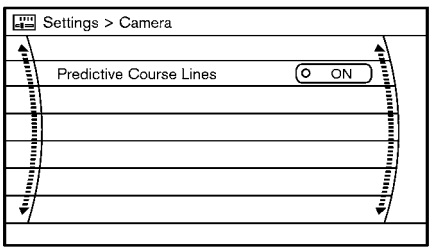

SAA2606

PREDICTIVE COURSE LINE SETTINGS

To turn ON or OFF the predictive course line display, push the **SETTING** button, select the “Camera” key and push the **ENTER** button.

Predictive Course Lines:

When this item is turned on, the predictive course lines will be displayed on the monitor when the shift lever is in the R (Reverse) position.

HOW TO ADJUST SCREEN

To adjust the Display ON/OFF, Brightness, Tint, Color, Contrast and Black Level of the RearView Monitor, push the **SETTING** button with the RearView Monitor on, select the “Display” key on the screen and select the item key and adjust the level using the INFINITI controller.

Do not adjust the Brightness, Tint, Color, Contrast and Black Level of the RearView Monitor while the vehicle is moving. Make sure the parking brake is firmly applied.

OPERATING TIPS

- When the shift lever is shifted to the R (Reverse) position, the monitor screen automatically changes to the RearView Monitor mode. However, the radio can be heard.
- When the view is switched, the display images on the screen may be displayed with some delay.
- When the temperature is extremely high or low, the screen may not clearly display objects. This is not a malfunction.
- When strong light is directly coming on the camera, objects may not be displayed clearly. This is not a malfunction.
- Vertical lines may be seen in objects on the screen. This is due to strong reflected light from the bumper. This is not a malfunction.
- The screen may flicker under fluorescent light. This is not a malfunction.
- The colors of objects on the RearView Monitor may differ somewhat from the actual color of objects. This is not a malfunction.
- Objects on the monitor may not be clear in a dark environment. This is not a malfunction.
- If dirt, rain or snow accumulates on the camera, the RearView Monitor may not display object clearly. Clean the camera.
- Do not use alcohol, benzine or thinner to clean the camera. This will cause discoloration. To clean the camera, wipe with a cloth dampened with diluted mild cleaning agent and then wipe with a dry cloth.
- Do not damage the camera as the monitor screen may be adversely affected.
- Do not use wax on the camera window. Wipe off any wax with a clean cloth

dampened with mild detergent diluted with water.

AROUND VIEW MONITOR (AVM) (models with navigation system)

With the ignition switch in the on position, press the **CAMERA** button or move the shift lever to the "R" (Reverse) position to operate the Around View Monitor. The monitor displays various views of the position of the vehicle.

Available views:

- Bird's-Eye View
  The surrounding view of the vehicle from above.
- Front-Side View
  The view around and ahead of the front passenger's side wheel.
- Front View
  An approximately 150-degree view of the front of the vehicle.
- Front-Wide View
  An approximately 180-degree view of the front of the vehicle.
- RearView
  An approximately 150-degree view of the rear of the vehicle.
- Rear-Wide View
  An approximately 180-degree view of the rear of the vehicle.

The system is designed as an aid to the driver in situations such as slot parking or parallel parking.

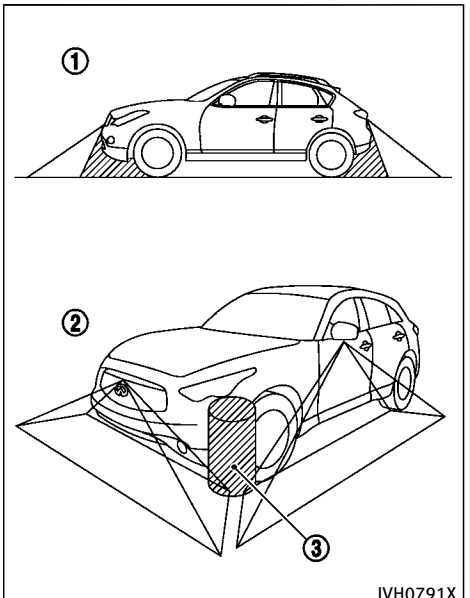

There are some areas where the system will not show objects and the system does not warn of moving objects. When in the front or the rearview display, an object below the bumper or on the ground may not be viewed ①. When in the bird's-eye view, a tall object near the seam ③ of the

camera viewing areas will not appear in the monitor ②.

WARNING

- **The Around View Monitor is a convenient feature but it is not a substitute for proper vehicle operation because it has areas where objects cannot be viewed. Always look out the windows and check mirrors to be sure that it is safe to move.**
- **The driver is always responsible for safety during parking and other maneuvers.**
- **Do not use the Around View Monitor with the outside mirror in the stored position, and make sure that the lift gate is securely closed when operating the vehicle using the Around View Monitor.**
- **The distance between objects viewed on the Around View Monitor differs from the actual distance.**
- **The cameras are installed above the front grille, the outside mirrors and above the rear license plate. Do not put anything on the cameras.**
- **When washing the vehicle with high-pressure water, be sure not to spray it around the cameras. Otherwise, water may enter the camera unit causing water condensation on the lens, a malfunction, fire or an electric shock.**
- **Do not strike the cameras. They are precision instruments. Doing so could cause a malfunction or cause damage resulting in a fire or an electric shock.**

CAUTION

Do not scratch the lens when cleaning dirt or snow from the front of the camera.

AVAILABLE VIEWS

WARNING

- **The distance guide line and the vehicle width line should be used as a reference only when the vehicle is on a paved, level surface. The distance viewed on the monitor is for reference only and may be different than the actual distance between the vehicle and displayed objects.**
- **Use the displayed lines and the bird's-eye view as a reference. The lines and the bird's-eye view are greatly affected by the number of occupants, fuel level, vehicle position, road condition and road grade.**
- **If the tires are replaced with different sized tires, the predictive course line and the bird's-eye view may be displayed incorrectly.**
- **When driving the vehicle up a hill, objects viewed in the monitor are further than they appear. When driving the vehicle down a hill, objects viewed in the monitor are closer than they appear.**
- **Use the mirrors or actually look to properly judge distances to other objects.**
- **The vehicle width and predictive course lines are wider than the actual width and course.**
- **The distance between objects viewed in the rearview differs from actual distance because a wide-angle lens is used.**
- **Objects in the monitor will appear visually opposite than when viewed in the rearview and outside mirrors.**

- **On a snow-covered or slippery road, there may be a difference between the predictive course line and the actual course line.**
- **The displayed lines on the rearview will appear slightly off to the right because the rearview camera is not installed in the rear center of the vehicle.**

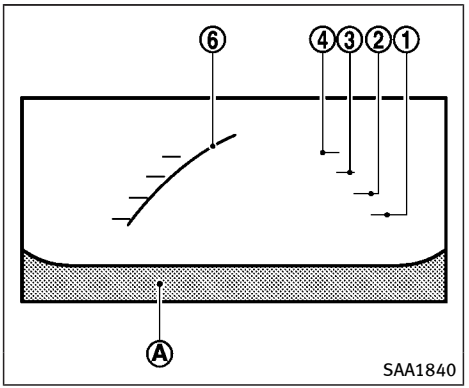

Front view

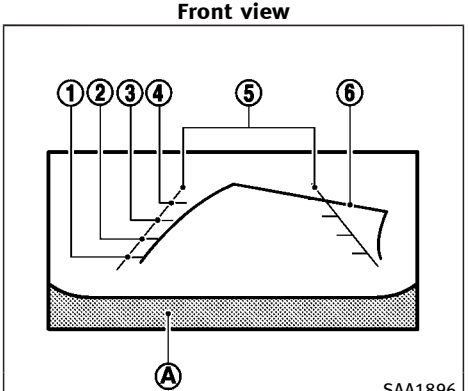

Rear view

Front and rearview

Guiding lines, which indicate the vehicle width and distances to objects with reference to the vehicle body line Ⓐ, are displayed on the monitor.

Distance guide lines:

Indicate distances from the vehicle body.

- Red line ①: approx. 1.5 ft (0.5 m)
- Yellow line ②: approx. 3 ft (1 m)
- Green line ③: approx. 7 ft (2 m)
- Green line ④: approx. 10 ft (3 m)

Vehicle width guide lines ⑤:

Indicate the vehicle width when backing up.

Predictive course lines ⑥:

Indicate the predictive course when operating the vehicle. The predictive course lines will be displayed on the monitor when the steering wheel is turned. The predictive course lines will move depending on how much the steering wheel is turned and will not be displayed while the steering wheel is in the straight ahead position.

The front view will not be displayed when the vehicle speed is above 6 MPH (10 km/h).

NOTE:

When the monitor displays the front view and the steering wheel turns about 90 degrees or less from the neutral position, both the right and left predictive course lines ⑥ are displayed. When the steering wheel turns about 90 degrees or more, a line is displayed only on the opposite side of the turn.

Bird's-eye view

WARNING

- **Objects in the bird's-eye view will appear further than the actual distance because the bird's-eye view is a pseudo view that is processed by combining the views from the cameras on the outside mirrors, the front and the rear of the vehicle.**
- **Tall objects, such as a curb or vehicle, may be misaligned or not displayed at the seam of the views.**
- **Objects that are above the camera cannot be displayed.**
- **The view for the bird's-eye view may be misaligned when the camera position alters.**
- **A line on the ground may be misaligned and is not seen as being straight at the seam of the views. The misalignment will increase as the line proceeds away from the vehicle.**
- **Tire angle display does not indicate the actual tire angle**

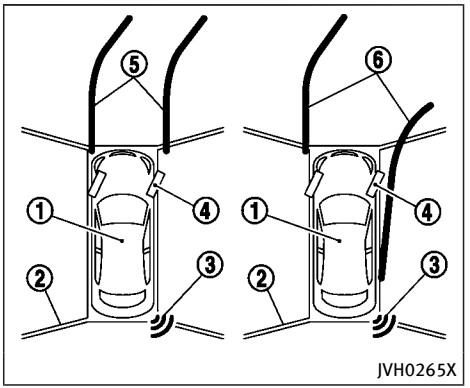

The bird's-eye view shows the overhead view of the vehicle, which helps confirm the vehicle position and the predicted course to a parking space.

The vehicle icon ① shows the position of the vehicle. Note that the size of the vehicle icon on the bird's-eye view may differ somewhat from the actual vehicle.

The areas that the cameras cannot cover ② are indicated in black. The non-viewable area ② is highlighted in yellow for several seconds after the bird's-eye view is displayed. It will be shown only the first time after the ignition switch is placed in the "ON" position.

When the corner of the vehicle moves closer to an object, the corner sonar indicators ③ appears.

The driver can check the direction and angle of the tire on the display by tire icon ④ when driving the vehicle forward or backward.

Predictive course lines (⑤ and ⑥) indicate the predictive course when operating the vehicle. The predictive course lines will be displayed on the monitor when the steering wheel is turned. The predictive course lines will move depending on how much the steering wheel is turned and will not be displayed while the steering wheel is in the neutral position.

When the monitor displays the front view and the steering wheel turns about 90 degrees or less from the neutral position, the two green predictive course lines ⑤ are shown in front of the vehicle.

When the steering wheel turns about 90 degrees or more, one green predictive course line ⑥ is shown in front of the vehicle and the other green predictive course line ⑥ is shown at side of the vehicle.

When the monitor displays the rear view, the predictive course lines are shown at back of the vehicle.

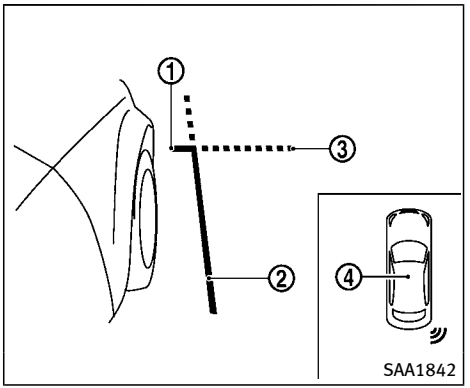

Front-side view

Guiding lines:

Guiding lines that indicate the width and the front end of the vehicle are displayed on the monitor.

The front-of-vehicle line ① shows the front part of the vehicle.

The side-of-vehicle line ② shows the vehicle width including the outside mirrors.

The extensions ③ of both the front ① and side ② lines are shown with a green dotted line.

The corner sonar indicator ④ will appear when a corner of the vehicle moves closer to an object.

The corner sonar indicator ④ can be turned off. See “Around View Monitor settings” (P.4-44).

CAUTION

The turn signal light may look like with the side-of-vehicle line. This is not a malfunction.

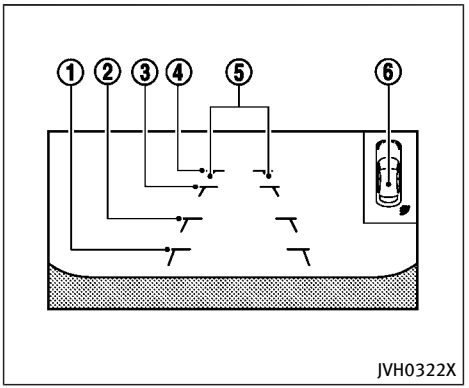

Front-wide view

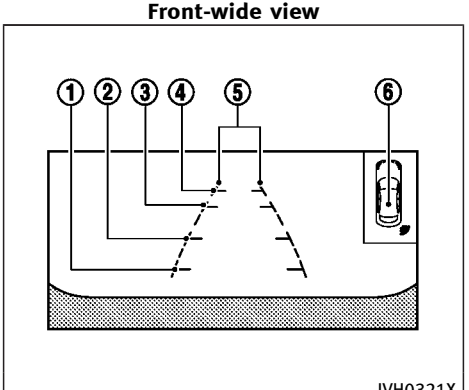

Rear-wide view

Front-wide/rear-wide view

The front-wide/rear-wide view shows a wider area on the entire screen and allows the checking of the blind corners on the right and left sides. The front-wide/rear-wide view displays an approximately 180-degree area while the front view and the rear view display an approximately 150-degree area. The predictive course lines are not displayed when using the front-wide/rear-wide view.

Distance guide lines:

Indicates distances from the vehicle body.

- Red line ①: approx. 1.5 ft (0.5 m)
- Yellow line ②: approx. 3 ft (1 m)
- Green line ③: approx. 7 ft (2 m)
- Green line ④: approx. 10 ft (3 m)

Vehicle width guide lines ⑤:

Indicates the vehicle width when backing up.

Corner sonar indicator ⑥:

The corner sonar indicator ⑥ will appear when a corner of the vehicle moves closer to an object.

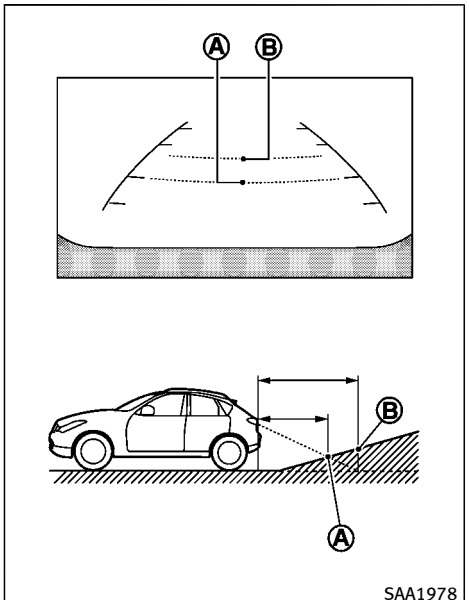

DIFFERENCE BETWEEN PREDICTIVE AND ACTUAL DISTANCES

Backing up on a steep uphill

When backing up the vehicle up a hill, the distance guide lines and the vehicle width guide lines are shown closer than the actual distance. For example, the display shows 3 ft (1 m) to the place Ⓐ, but the actual 3 ft (1 m) distance on the hill is the place Ⓑ. Note that any object on the hill is viewed in the monitor further than it appears.

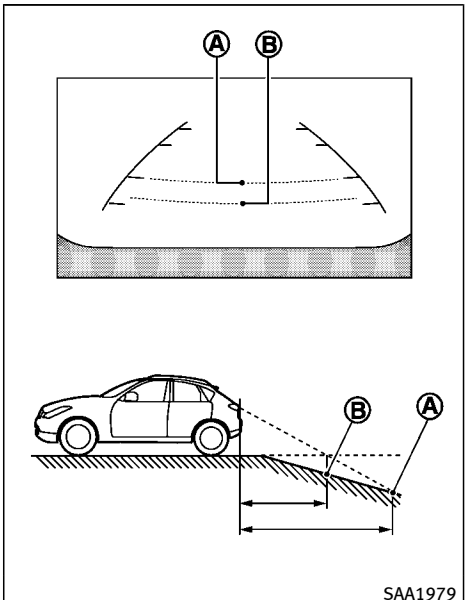

Backing up on a steep downhill

When backing up the vehicle down a hill, the distance guide lines and the vehicle width guide lines are shown further than the actual distance. For example, the display shows 3 ft (1 m) to the place Ⓐ, but the actual 3 ft (1 m) distance on the hill

is the place Ⓑ. Note that any object on the hill is viewed in the monitor closer than it appears.

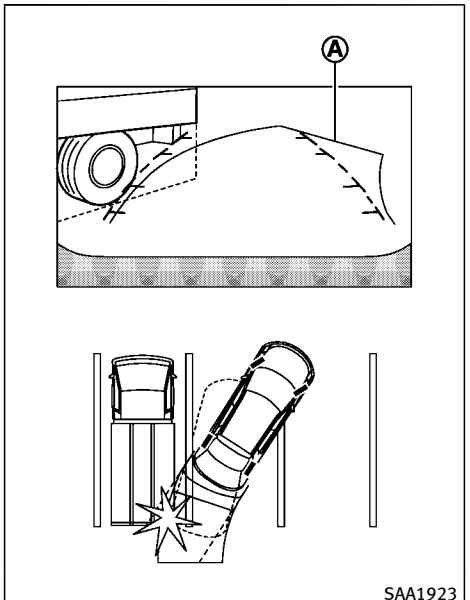

Backing up near a projecting object

The predictive course lines Ⓐ do not touch the object in the display. However, the vehicle may hit the object if it projects over the actual moving course.

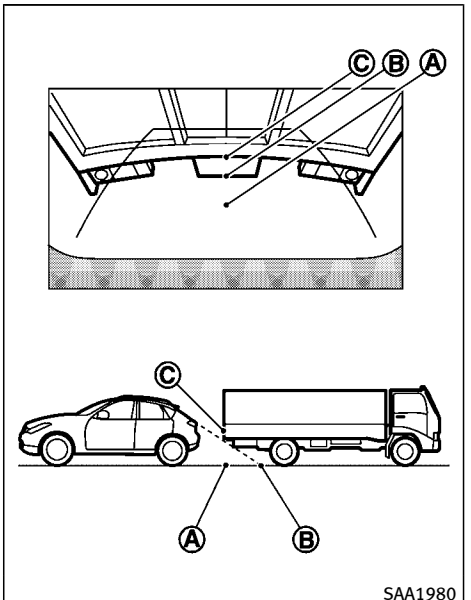

Backing up behind a projecting object

The position Ⓒ is shown further than the position Ⓑ in the display. However, the position Ⓒ is actually at the same distance as the position Ⓐ. The vehicle may hit the object when backing up to the

position Ⓐ if the object projects over the actual moving course.

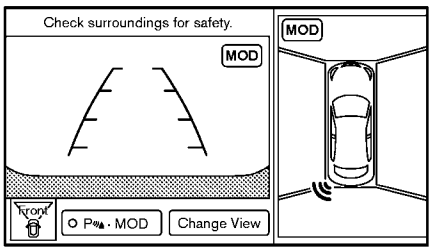

JVH0824X

HOW TO SWITCH THE DISPLAY

With the ignition switch in the “ON” position, push the **CAMERA** button or move the shift lever to the “R” (Reverse) position to operate the Around View Monitor.

The Around View Monitor can display two split views as well as a single view of the front-wide view or rear-wide view. Select the “Change View” key to switch between the available views.

If the shift lever is not in the “R” (Reverse) position, the available views are:

- Front-view/bird’s-eye view split screen
- Front-view/front-side view split screen
- Front-wide view

If the shift lever is in the “R” (Reverse) position, the available views are:

- Rearview/bird’s-eye view split screen
- Rearview/front-side view split screen
- Rear-wide view

The display automatically changes to the Around View Monitor displaying front-view/bird’s-eye view when:

- The shift lever is in the “D” (Drive) position and the sonar detects the vehicle is approaching an object.

The display will switch from the Around View Monitor screen when:

- When the shift lever is in the “D” (Drive) position and the vehicle speed increases above approximately 6 MPH (10 km/h).
- When the sonar no longer detects an object the screen will automatically switch back the previously displayed screen.
- When a different screen is selected.

CAMERA AIDING CORNER SONAR FUNCTION

When the corner of the vehicle moves closer to the object while the Around View Monitor is displayed, an indicator is displayed and a tone is sounded by the corner sonar function to warn the driver.

WARNING

- **The sonar is a convenience feature. It is not a substitute for proper parking.**
- **The system is deactivated at speeds above 6 MPH (10 km/h). It is reactivated at lower speeds.**
- **The driver is always responsible for safety during parking and other maneuvers.**
- **Always look around and check that it is safe to move before parking.**
- **Read and understand the limitations of the sonar as contained in this section.**
- **The colors of the sonar indicators and the distance guide lines in the front, front-wide, rear and rear-wide views indicate different distances to the object.**
- **Inclement weather or Ultrasonic sources such as an automatic car wash, a truck's compressed-air brakes or a pneumatic drill may affect the function of the system; this may include reduced performance or a false activation.**
- **This function is designed as an aid to the driver in detecting large stationary objects to help avoid damaging the vehicle.**
- **The system is not designed to prevent contact with small or moving objects.**
- **The system will not detect small objects below the bumper, and may not detect objects close to the bumper or on the ground.**
- **The system may not detect the following objects:**
  - **— Fluffy objects such as snow, cloth, cotton, glass or wool.**
  - **— Thin objects such as rope, wire or chain.**
  - **— Wedge-shaped objects.**
- **If your vehicle sustains damage to the bumper fascia, leaving it misaligned or bent, the sensing zone may be altered causing inaccurate measurement of objects or false alarms.**

CAUTION

- **Excessive noise (such as audio system volume or an open vehicle window) will interfere with the tone and it may not be heard.**
- **Keep the surface of the sonar sensors (located on the front and rear bumper fascia) free from accumulations of snow, ice and dirt. Do not scratch the surface of the sonar sensors when cleaning. If the sensors are covered, the accuracy of the sonar function will be diminished.**

The system gives the tone for front objects when the shift lever is in the D (Drive) position and both front and rear objects when the shift lever is in the R (Reverse) position.

When the camera image is shown on the display, the system shows the sonar indicator regardless of the shift lever position.

The system is deactivated at speeds above 6 MPH(10 km/h). It is reactivated at lower

speeds.

When the objects are detected, the indicator (green) appears and blinks and the tone sounds intermittently. When the vehicle moves closer to the object, the color of the indicator turns yellow and the rate of the blinking and the rate of the tone increase. When the vehicle is very close to the object, the indicator stops blinking and turns red, and the tone sounds continuously.

The intermittent tone will stop after three seconds when an object is detected by only the corner sonar and the distance does not change.

The tone will stop when the object is no longer near the vehicle.

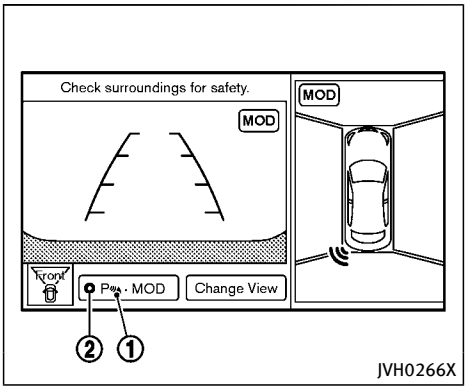

When the "P·MOD" ① is selected, the indicator ② will turn off and the sonar will be turned off temporarily. The Moving Object Detection (MOD) system will also be turned off at the same time. (See "Moving Object Detection (MOD)" (P.4-41).) When the key is selected again, the indicator will turn on and the sonar will turn back on.

In the below cases, the sonar will be turned back on automatically:

- When the shift lever is in the R (Reverse) position.
- When the **CAMERA** button is pressed and a screen other than the camera view is shown on the display.
- When vehicle speed decreases below approximately 6 MPH (10 km/h).
- When the ignition switch is placed in the "OFF" position and turned back to the "ON" position again.
- When the switch is selected, the MOD function will also be turned off.

To prevent the sonar system from activating altogether, use the "Camera Settings" menu. For more information, see "Around View Monitor settings" (P.4-44) in this section.

MOVING OBJECT DETECTION (MOD)

The Moving Object Detection (MOD) system can inform the driver of the moving objects surrounding the vehicle when driving out of garages, maneuvering into parking lots and in other such instances.

The MOD system detects moving objects by using image processing technology on the image shown on the display.

The MOD system operates in the following conditions when the camera view is displayed:

- When the shift lever is in the P (Park) or N (Neutral) position and the vehicle is stopped, the MOD system detects the moving objects in the bird's-eye view.

The MOD system will not operate if the outside mirror is moving in or out or if either door is opened.

- When the shift lever is in the D (Drive) position and the vehicle speed is below approximately 5 MPH (8 km/h), the MOD system detects moving objects in the front view or front-wide view.
- When the shift lever is in the R (Reverse) position and the vehicle speed is below approximately 5 MPH (8 km/h), the MOD system detects moving objects in the rearview or rear-wide view. The MOD system will not operate if the lift gate is open.

The MOD system does not detect moving objects in the front-side view. The MOD icon is not displayed on the screen when in this view.

WARNING

- **The MOD system is not a substitute for proper vehicle operation and is not designed to prevent contact with the objects surrounding the vehicle. When maneuvering, always use the outside mirror and rear view mirror and turn and check the surrounding to ensure it is safe to maneuver.**
- **The system is deactivated at speeds above 6 MPH (10 km/h). It is reactivated at lower speeds.**
- **The system is not designed to prevent contact with all objects.**
- **The MOD system does not have the function to detect the surrounding stationary objects.**

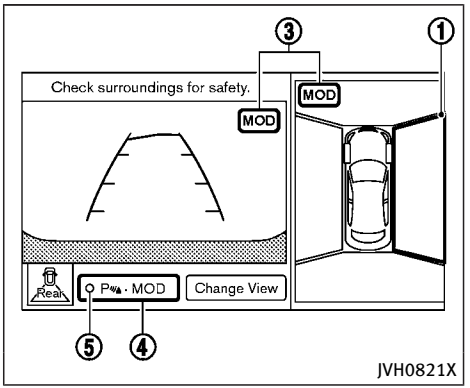

Bird's-eye view

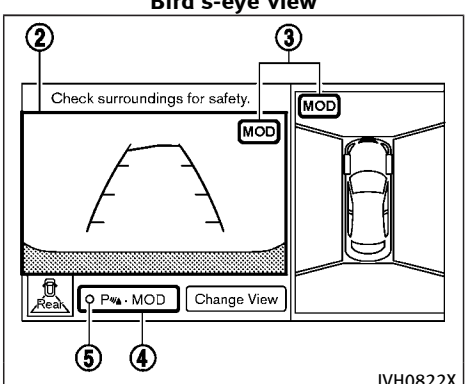

Front view / rear view

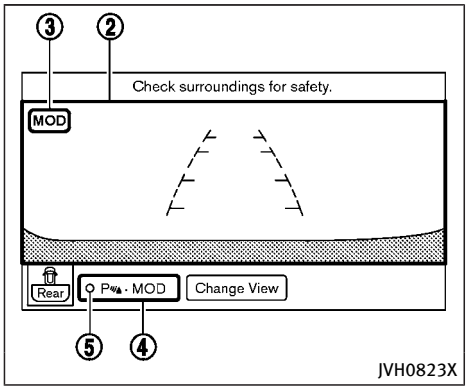

Front-wide view / rear-wide view

When the MOD system detects a moving object surrounding the vehicle, the yellow frame will be displayed on the view where the objects are detected and a chime will sound once. While the MOD system continues to detect moving objects, the yellow frame continues to be displayed.

In the bird's-eye view, the yellow frame ① is displayed on each camera image (front, rear, right, left) depending on where moving objects are detected.

The yellow frame ② is displayed on each view in the front view, front-wide view, rear view and rear-wide view modes.

While the sonar is beeping, the MOD system does not chime.

A blue MOD icon ③ is displayed in the view where the MOD system is operative. A gray MOD icon ③ is displayed in the view where the MOD system is not operative.

When the "MOD" key ④ is selected, the MOD system will turn off temporarily and the indicator ⑤ will turn off. At the same time a camera-aiding sonar will also be turned OFF. When the "MOD" key ④ is selected again, the indicator will turn on and the MOD system will turn back on.

If the MOD system is turned off, the MOD icon ③ is not displayed.

The MOD system will turn on automatically under the following conditions:

- When the shift lever is in the R (Reverse) position.
- When the **CAMERA** button is pushed to switch from a different screen to the camera view on the display.
- When vehicle speed decreases below approximately 5 MPH (8 km/h).
- When the ignition switch is placed in the "OFF" position and then back to the "ON" position.

To set the MOD system so that it remains off at all times, use the camera settings menu. See "Around View Monitor settings" (P.4-44) for more information.

WARNING

- **Do not use the MOD system when towing a trailer. The system may not function properly.**
- **Excessive noise (for example, audio system volume or open vehicle window) will interfere with the chime sound, and it may not be heard.**
- **The MOD system performance will be limited according to environmental conditions and surrounding objects such as:**
  - **When there is low contrast between background and the moving objects.**
  - **When there is blinking source of light.**
  - **When strong light such as another vehicle's headlight or sunlight is present.**
  - **When camera orientation is not in its usual position, such as when mirror is folded.**

— **When there is dirt, water drops or snow on the camera lens.**

— **When the position of the moving objects in the display is not changed.**

- **The MOD system might detect flowing water droplets on the camera lens, white smoke from the muffler, moving shadows, etc.**
- **The MOD system may not function properly depending on the speed, direction, distance or shape of the moving objects.**
- **If your vehicle sustains damage to the parts where the camera is installed, leaving it misaligned or bent, the sensing zone may be altered and the MOD system may not detect objects properly.**
- **When the temperature is extremely high or low, the screen may not display objects clearly. This is not a malfunction.**

Camera maintenance

If dirt, rain or snow accumulates on the camera, the MOD system may not operate properly. Clean the camera.

HOW TO ADJUST THE SCREEN VIEW

To adjust the Display ON/OFF, Brightness, Tint, Color, Contrast and Black Level of the Around View Monitor, push the **SETTING** button with the Around View Monitor on, select the item key and adjust the level using the INFINITI controller.

Do not adjust the Brightness, Tint, Color, Contrast and Black Level of the Around View Monitor while the vehicle is moving. Make sure the parking brake is firmly applied.

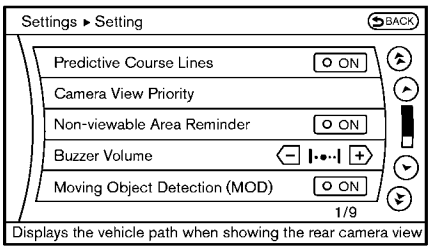

JVH0323M

AROUND VIEW MONITOR SETTINGS

To set up the Around View Monitor to your preferred settings, push the **SETTING** button, select the “Other” key and then select the “Camera” key.

Predictive Course Lines:

When this item is turned to ON, the predictive course line is displayed in the front and the rearview and bird’s-eye view.

Camera View Priority:

The view shown on the screen at the beginning of Around View Monitor operation can be selected in order of priority.

Non-viewable Area Reminder:

With this item turned to ON, the non-viewable area is highlighted in yellow for several seconds after the bird's-eye view is displayed. It will be shown only the first time after the ignition switch is in the "ON" position.

Buzzer Volume:

Adjust the volume of the buzzer.

Corner Sonar Sensitivity:

Adjust the sensitivity level of the corner sonar higher (right) or lower (left).

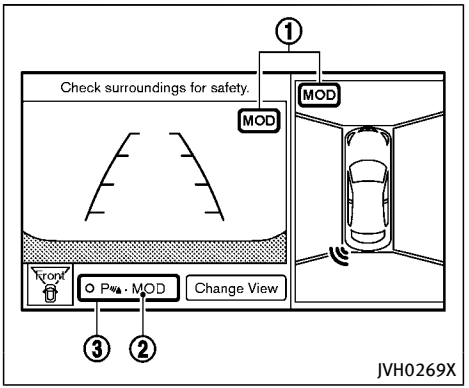

Moving Object Detection (MOD):

When this item is set to ON, the MOD is activated. When this item is turned to OFF (indicator turns off), the MOD system is deactivated. When the MOD system is deactivated, "MOD" (2) will disappear on the P·MOD (3) and the icon (1) will disappear as well. When the sonar is turned OFF on the setting menu as well, the P·MOD (3) will disappear.

Sonar:

When this item is turned ON, the front and rear sonar is activated. When this item is turned to OFF (indicator turns off), the front and rear sonar is deactivated. The amber markers are displayed at the corners of the vehicle icon and the sonar icon will disappear on the P·MOD. When the MOD is turned OFF on the setting menu as well, the "MOD" will disappear. The next time the ignition switch is placed in the "ON" position, "Sonar is OFF" is displayed briefly.

Towing Mode:

When this item is turned ON, only the rear sonar is OFF. The amber markers are displayed at the rear corners of the vehicle icon.

Show Camera when Sonar Activate:

When this item is turned ON, the camera view is automatically shown on the display in the case that the distance to the objects measured by the sonar is becoming short.

Sonar Sensitivity:

Adjust the sensitivity level of the corner sonar higher (right) or lower (left).

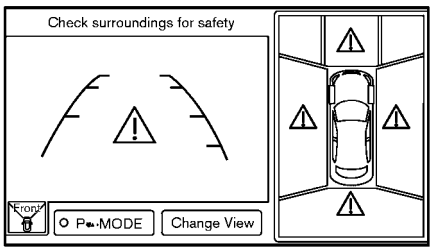

JVH0270X

View malfunction

When the "!" icon is displayed on the screen, there will be abnormal conditions in the Around View Monitor. This will not hinder normal driving operation but the system should be inspected by an INFINITI retailer.

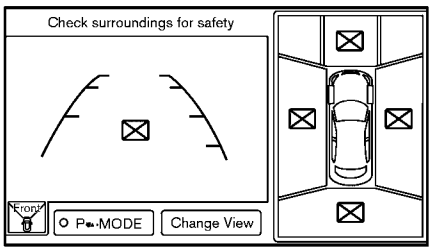

JVH0271X

When the "[X]" icon is displayed on the screen, the camera image may be receiving temporary electronic disturbances from surrounding devices. This will not hinder normal driving operation but the system should be inspected by an INFINITI retailer if it occurs frequently.

OPERATING TIPS

CAUTION

- **Do not use alcohol, benzine or thinner to clean the camera. This will cause discoloration. To clean the camera, wipe with a cloth dampened with a diluted mild cleaning agent and then wipe with a dry cloth.**
- **Do not damage the camera as the monitor screen may be adversely affected.**

- The screen displayed on the Around View Monitor will automatically return to the previous screen 3 minutes after the **CAMERA** button has been pushed while the shift lever is in a position other than the R (Reverse) position.
- When the view is switched, the display images on the screen may be displayed with some delay.
- When the temperature is extremely high or low, the screen may not display objects clearly. This is not a malfunction.

- When strong light is directly coming on the camera, objects may not be displayed clearly. This is not a malfunction.
- The screen may flicker under fluorescent light. This is not a malfunction.
- The colors of objects on the Around View Monitor may differ somewhat from the actual color of objects. This is not a malfunction.
- Objects on the monitor may not be clear and the color of the object may differ in a dark environment. This is not a malfunction.
- There may be differences in sharpness between each camera view of the bird's-eye view.
- If dirt, rain or snow accumulates on the camera, the Around View Monitor may not display objects clearly. Clean the camera.
- Do not use wax on the camera lens. Wipe off any wax with a clean cloth that has been dampened with a mild detergent diluted with water.

VENTILATORS

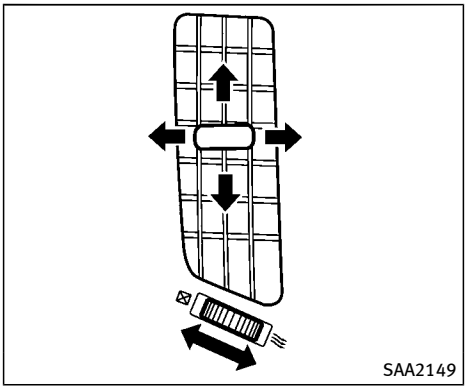

Center ventilators

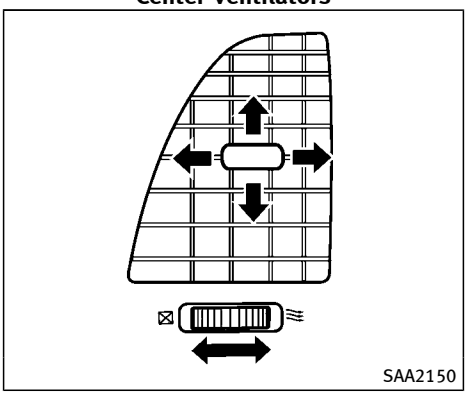

Side ventilators

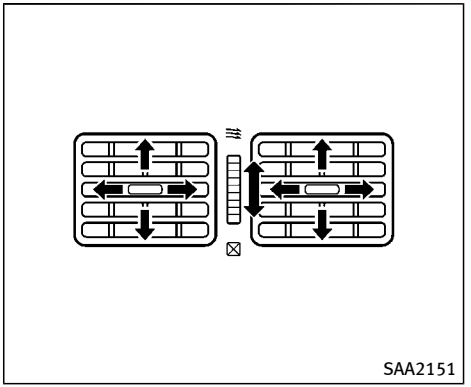

Rear ventilators

Open or close, and adjust the air flow direction of ventilators.

⊠ : This symbol indicates that the ventilators are closed.

≋ : This symbol indicates that the ventilators are open.

WARNING

- **The air conditioner cooling function operates only when the engine is running.**
- **Do not leave children or adults who would normally require the support of others alone in your vehicle. Pets should not be left alone either. On hot, sunny days, temperatures in a closed vehicle could quickly become high enough to cause severe or possibly fatal injuries to people or animals.**
- **Do not use the recirculation mode for long periods as it may cause the interior air to become stale and the windows to fog up.**

Start the engine and operate the automatic climate control system.

When the “STATUS” button is pushed, the automatic climate control status screen will appear. (See “How to use STATUS button” (P.4-9).)

NOTE:

- **Odors from inside and outside the vehicle can build up in the air conditioner unit. Odor can enter the passenger compartment through the vents.**
- **When parking, set the heater and air conditioner controls to turn off air recirculation to allow fresh air into the passenger compartment. This should help reduce odors inside the vehicle.**

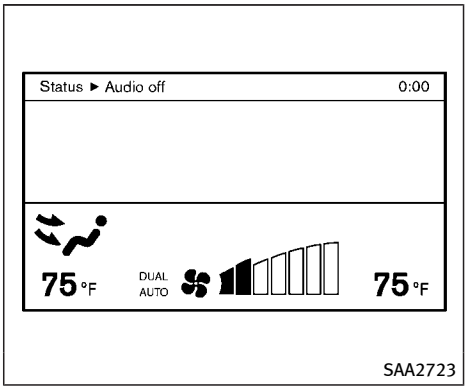

Models with navigation system

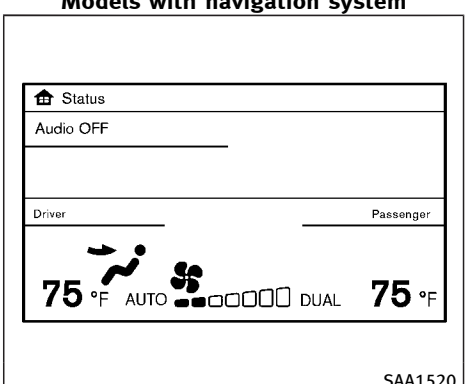

Models without navigation system

You can individually set the driver and front passenger side temperature using each temperature control button.

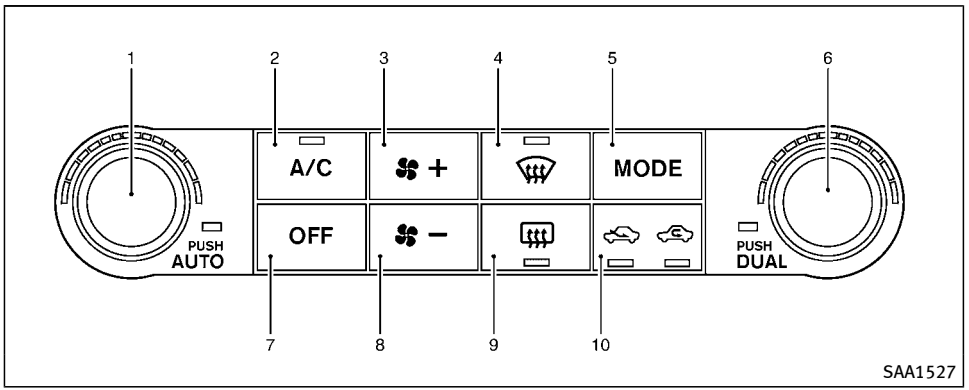

1. "AUTO" automatic climate control ON button/Temperature control dial (driver side)
2. "A/C" air conditioner ON/OFF button
3. "+" fan speed increase button
4. " " front defroster button
5. "MODE" manual air flow control button
6. "DUAL" zone control ON/OFF button/ Temperature control dial (passenger side)
7. "OFF" button for climate control system
8. "-" fan speed decrease button
9. " " rear window defroster button (See "Rear window and outside mirror defroster switch" (P.2-38).)
10. " " intake air control button

AUTOMATIC CLIMATE CONTROL

Automatic operation

Cooling and/or dehumidified heating (AUTO):

This mode may be used all year round. The system works automatically to control the inside temperature, air flow distribution and fan speed after the preferred temperature is set manually.

1. Push the "AUTO" button on. (The indicator on the button will illuminate and AUTO will be displayed.)
2. Turn the temperature control dial (driver side) to set the desired temperature.
   - The temperature can be set within the following range.
     — For U.S.: 60 to 90°F
     — For Canada: 18 to 32°C
   - The temperature of the passenger compartment will be maintained automatically. Air flow distribution and fan speed will also be controlled automatically.
3. You can individually set driver and front passenger side temperature using each temperature control button. When the "DUAL" button is pushed or the pas-

senger side temperature control button is turned, the DUAL indicator will come on. To turn off the passenger side temperature control, push the “DUAL” button.

4. To turn off the climate control system, push the “OFF” button.

A visible mist may be seen coming from the ventilators in hot, humid conditions as the air is cooled rapidly. This does not indicate a malfunction.

Heating (A/C OFF):

The air conditioner does not activate in this mode. When you need to heat only, use this mode.

1. Push the “AUTO” button on.
2. If the A/C indicator light illuminates, push the “A/C” button.

   (The A/C indicator light will turn off.)
3. Turn the temperature control dial to set the desired temperature.

- The temperature of the passenger compartment will be maintained automatically. Air flow distribution and fan speed are also controlled automatically.
- Do not set the temperature lower than the outside air temperature. Otherwise the system may not work properly.
- Not recommended if windows fog up.

Dehumidified defrosting or defogging:

1. Push the “ ” front defroster button. (The indicator light on the button will illuminate.)
2. Turn the temperature control dial to set the desired temperature.

- To quickly remove ice from the outside of the windows, push the fan speed increase button “+” and set it to the maximum position.
- As soon as possible after the windshield is clean, push the “AUTO” button to return to the auto mode.
- When the “ ” front defroster button is pushed, the air conditioner will automatically be turned on at outside temperatures above 23°F (–5°C) to defog the windshield, and the air recirculate mode will automatically be turned off.

  Outside air is drawn into the passenger compartment to improve the defogging performance.

Manual operation

Fan speed control:

Push the fan speed increase “+” or decrease “-” buttons to manually control the fan speed.

Push the “AUTO” button to return to automatic control of the fan speed.

Temperature control:

Turn the temperature control dial to set the desired temperature.

- The temperature can be set within the following range.
  — For U.S.: 60 to 90°F (16 to 32°C)
  — For Canada: 64 to 90°F (18 to 32°C)

Air recirculation:

Push the intake air control button to recirculate interior air inside the vehicle. The indicator light on the “ ” side will illuminate.

The air recirculation mode cannot be activated when the air conditioner is in the front defrosting mode “ ”.

Outside air circulation:

Push the intake air control button to draw outside air into the passenger compartment. The indicator light on the “ ” side

will turn off and “” will illuminate.

Automatic intake air control:

In the AUTO mode, the intake air will be controlled automatically. To manually control the intake air, push the intake air control button.

- To return to the automatic control mode, push the intake air control button for about 2 seconds. The indicator lights (both air recirculation “” and outside air circulation “” sides) will flash twice, and then the intake air will be controlled automatically.

Air flow control:

Pushing the “MODE” manual air flow control button selects the air outlet to:

: Air flows from center and side ventilators.
: Air flows from center and side ventilators and foot outlets.
: Air flows mainly from foot outlets.
: Air flows from defroster and foot outlets.

To turn the system off

Push the “OFF” button.

OPERATING TIPS

When the engine coolant temperature and outside air temperature are low, the air flow from the foot outlets may not operate. This is not a malfunction. After the coolant temperature warms up, air will flow normally from the foot outlets.

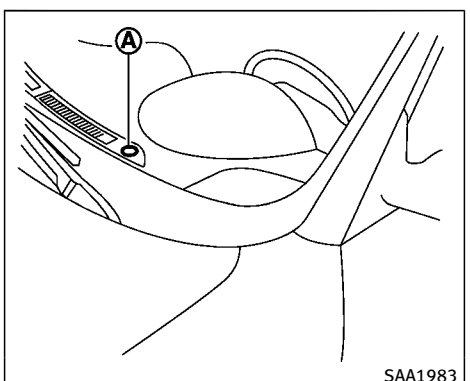

The sunload sensor (A) on the instrument panel helps maintain a constant temperature. Do not put anything on or around this sensor.

IN-CABIN MICROFILTER

To make sure that the air conditioner heats, defogs and ventilates efficiently, replace the filter according the specified maintenance intervals listed in the INFINITI Service and Maintenance Guide. To replace the filter, contact an INFINITI retailer.

The filter should be replaced if the air flow decreases significantly or if windows fog up easily when operating the heater or air conditioner.

SERVICING CLIMATE CONTROL

The climate control system in your INFINITI is charged with a refrigerant designed with the environment in mind. **This refrigerant will not harm the earth’s ozone layer.** However, special charging equipment and lubricant are required when servicing your INFINITI air conditioner. Using improper refrigerants or lubricants will cause severe damage to your climate control system. (See “Capacities and recommended fluids/lubricants” (P.9-2) for climate control system refrigerant and lubricant recommendations.)

Your INFINITI retailer will be able to service your environmentally friendly climate control system.

WARNING

The system contains refrigerant under high pressure. To avoid personal injury, any air conditioner service should be done only by an experienced technician with the proper equipment.

AUDIO OPERATION PRECAUTIONS

Radio

Push the ignition switch to the ACC or ON position and push the radio band select button to turn on the radio. If you listen to the radio with the engine not running, the ignition switch should be pushed to the ACC position.

Radio reception is affected by station signal strength, distance from radio transmitter, buildings, bridges, mountains and other external influences. Intermittent changes in reception quality normally are caused by these external influences.

Using a cellular phone in or near the vehicle may influence radio reception quality.

Radio reception:

Your INFINITI radio system is equipped with state-of-the-art electronic circuits to enhance radio reception. These circuits are designed to extend reception range, and to enhance the quality of that reception.

However there are some general characteristics of both FM and AM radio signals that can affect radio reception quality in a moving vehicle, even when the finest equipment is used. These characteristics are completely normal in a given reception area, and do not indicate any malfunction in your INFINITI radio system.

Reception conditions will constantly change because of vehicle movement. Buildings, terrain, signal distance and interference from other vehicles can work against ideal reception. Described below are some of the factors that can affect your radio reception.

Some cellular phones or other devices may cause interference or a buzzing noise to come from the audio system speakers. Storing the device in a different location may reduce or eliminate the noise.

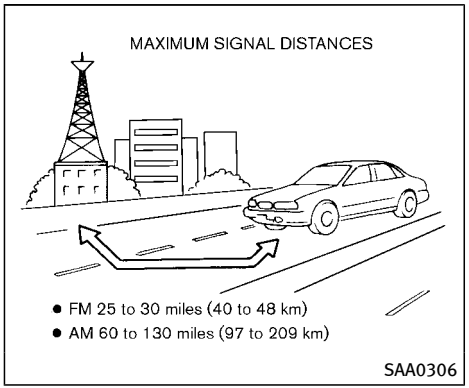

FM radio reception:

Range: FM range is normally limited to 25 to 30 miles (40 to 48 km), with monaural (single channel) FM having slightly more range than stereo FM. External influences may sometimes interfere with FM station reception even if the FM station is within 25 miles (40 km). The strength of the FM signal is directly related to the distance between the transmitter and receiver. FM signals follow a line-of-sight path, exhibiting many of the same characteristics as light. For example they will reflect off objects.

Fade and drift: As your vehicle moves away from a station transmitter, the signals will tend to fade and/or drift.

Static and flutter: During signal interference from buildings, large hills or due to antenna position, usually in conjunction with increased distance from the station transmitter, static or flutter can be heard. This can be reduced by lowering the treble setting to reduce the treble response.

Multipath reception: Because of the reflective characteristics of FM signals, direct and reflected signals reach the receiver at the same time. The signals may cancel each other, resulting in momentary flutter or loss of sound.

AM radio reception:

AM signals, because of their low frequency, can bend around objects and skip along the ground. In addition, the signals can be bounced off the ionosphere and bent back to earth. Because of these characteristics. AM signals are also subject to interference as they travel from transmitter to receiver.

Fading: Occurs while the vehicle is passing through freeway underpasses or in areas with many tall buildings. It can also occur for several seconds during ionospheric turbulence even in areas where no obstacles exist.

Static: Caused by thunderstorms, electrical power lines, electric signs and even traffic lights.

Satellite radio reception:

When the satellite radio is used for the first time or the battery has been replaced, the satellite radio may not work properly. This is not a malfunction. Wait more than 10 minutes with the satellite radio ON and the vehicle outside of any metal or large building for the satellite radio to receive all of the necessary data.

The satellite radio mode requires an active SiriusXM Satellite Radio subscription. The satellite radio is not available in Alaska, Hawaii and Guam.

The satellite radio performance may be affected if cargo carried on the roof blocks the satellite radio signal.

If possible, do not put cargo near the satellite antenna.

A build up of ice on the satellite radio antenna can affect satellite radio performance. Remove the ice to restore satellite radio reception.

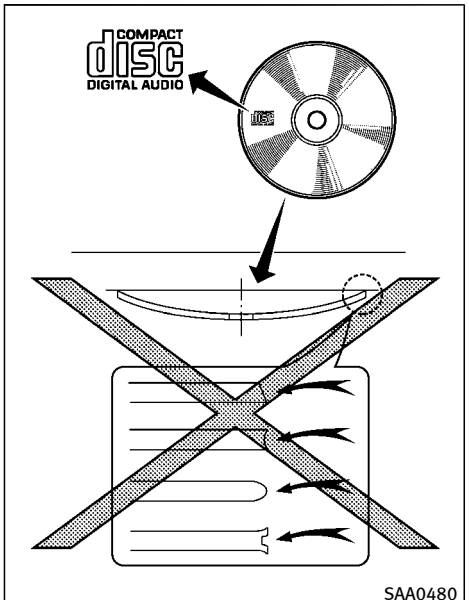

Compact Disc (CD) player

- Do not force a compact disc into the CD insert slot. This could damage the CD and/or CD changer/player.
- Trying to load a CD with the CD door closed could damage the CD and/or CD changer.
- During cold weather or rainy days, the player may malfunction due to the humidity. If this occurs, remove the CD and dehumidify or ventilate the player completely.
- The player may skip while driving on rough roads.
- The CD player sometimes cannot function when the passenger compartment temperature is extremely high. Decrease the temperature before use.
- Only use high quality 4.7 in (12 cm) round discs that have the "COMPACT disc DIGITAL AUDIO" logo on the disc or packaging.
- Do not expose the CD to direct sunlight.
- CDs that are of poor quality, dirty, scratched, covered with fingerprints, or that have pin holes may not work properly.
- The following CDs may not work properly:
  - Copy control compact discs (CCCD)
  - Recordable compact discs (CD-R)
  - Rewritable compact discs (CD-RW)
- Do not use the following CDs as they may cause the CD player to malfunction.
  - 3.1 in (8 cm) discs
  - CDs that are not round
  - CDs with a paper label
  - CDs that are warped, scratched, or have abnormal edges
- This audio system can only play prerecorded CDs. It has no capabilities to record or burn CDs.
- If the CD cannot be played, one of the following messages will be displayed.

CHECK DISC:

- Confirm that the CD is inserted correctly (the label side is facing up, etc.).
- Confirm that the CD is not bent or warped and it is free of scratches.

PUSH EJECT:

This is an error due to the temperature inside the player is too high. Remove the CD by pushing the EJECT button, and after a short time reinsert the CD. The CD can be played when the temperature of the player returns to normal.

UNPLAYABLE:

The file is unplayable in this audio system (only MP3, WMA or AAC CD).

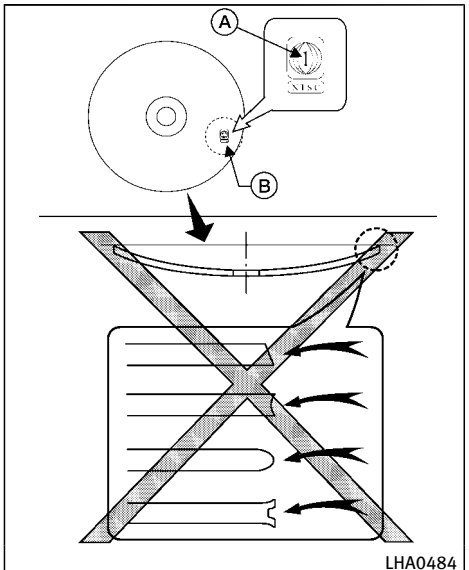

DVD (Digital Versatile Disc) player (models with navigation system)

- Do not force a compact disc into the CD/DVD insert slot. This could damage the CD/DVD player.
- During cold weather or rainy days, the player may malfunction due to humidity. If this occurs, remove the CD/DVD and dehumidify or ventilate the player completely.
- The player may skip while driving on rough roads.
- The CD/DVD player sometimes cannot function when the passenger compartment temperature is extremely high. Decrease the temperature before use.
- Only use high quality 4.7 in (12 cm) round discs that have the “COMPACT disc DIGITAL AUDIO” or “DVD Video” logo on the disc or packaging.
- Do not expose the CD/DVD to direct sunlight.
- CD/DVDs that are of poor quality, dirty, scratched, covered with fingerprints, or that have pinholes may not work properly.
- The following CD/DVDs are not guaranteed to play:
  — Copy control compact discs (CCCD)
  — Recordable compact discs (CD-R)
  — Rewritable compact discs (CD-RW)
  — Recordable DVDs (DVD±R, DVD±R DL)
  — Rewritable DVDs (DVD±RW, DVD±RW DL)
- Do not use the following CD/DVDs as they may cause the CD/DVD player to malfunction.
  — 3.1 in (8 cm) discs
  — CD/DVDs that are not round
  — CD/DVDs with a paper label
  — CD/DVDs that are warped, scratched or have abnormal edges
  — This audio system can only play prerecorded CD/DVDs. It has no capabilities to record or burn CD/DVDs.
- If the CD/DVD cannot be played, one of the following messages will be displayed.

Disc Read Error:

- Confirm that the CD/DVD is inserted correctly (the label side is facing up, etc.).
- Confirm that the CD/DVD is not bent or warped and it is free of scratches.

Please Eject Disc:

- This may be an error due to the temperature inside the player being too high. Remove the CD/DVD by pushing the EJECT button, and after a short time reinsert the CD/DVD. The CD/DVD can be played when the

temperature of the player returns to normal. If the error persists, consult your local retailership.

Unplayable File:

- The file may be copy protected.
- The file is not MP3, WMA, AAC, M4A or DivX® type.

Region Invalid:

- The DVD is not for region 1 or all regions. Use DVDs with a region code "1", "ALL" or "1 included" for your DVD entertainment system. (The region code Ⓐ is displayed as a small symbol printed on the top of the DVD Ⓑ.) This vehicle-installed DVD player cannot play DVDs with a region code other than "1" or "ALL".

Copyright and trademark:

- The technology protected by the U.S. patent and other intellectual property rights owned by Macrovision Corporation and other right holders is adopted for this system.
- This copyright protected technology cannot be used without a permit from Macrovision Corporation. It is limited to be personal use, etc., as long as the permit from Macrovision Corporation is not issued.
- Modifying or disassembling is prohibited.
- Dolby digital is manufactured under license from Dolby Laboratories, Inc.
- Dolby and the double D mark "DOLBY DIGITAL" are trademarks of Dolby Laboratories, Inc.
- DTS and DTS Digital Surround "dts" are registered trademarks of Digital Theater Systems, Inc.

Parental level (parental control):

DVDs with the parental control setting can be played with this system. Please use your own judgement to set the parental control with the system.

Disc selection:

The following disc formats can be played with the DVD drive.

- DVD-VIDEO
- VIDEO-CD
- CD-DA (Conventional Compact Disc)
- DTS-CD

USB (Universal Serial Bus) Connection Port

WARNING

Do not connect, disconnect or operate the USB device while driving. Doing so can be a distraction. If distracted you could lose control of your vehicle and cause an accident or serious injury.

CAUTION

- **Do not force the USB device into the USB port. Inserting the USB device tilted or up-side-down into the port may damage the port. Make sure that the USB device is connected correctly into the USB port.**
- **Do not grab the USB port cover (if so equipped) when pulling the USB device out of the port. This could damage the port and the cover.**
- **Do not leave the USB cable in a place where it can be pulled unintentionally. Pulling the cable may damage the port.**

The vehicle is not equipped with a USB device. USB devices should be purchased separately as necessary.

This system cannot be used to format USB devices. To format a USB device, use a personal computer.

In some states/area, the USB device for the front seats plays only sound without images for regulatory reasons, even when the vehicle is parked.

This system supports various USB memory devices, USB hard drives and iPod® players. Some USB devices may not be supported by this system.

- Partitioned USB devices may not play correctly.
- Some characters used in other languages (Chinese, Japanese, etc.) may not appear properly in the display. Using English language characters with a USB device is recommended.

General notes for USB use:

Refer to your device manufacturer's owner information regarding the proper use and care of the device.

Notes for iPod® use:

iPod® is a trademark of Apple Inc., registered in the U.S. and other countries.

- Improperly plugging in the iPod® may cause a checkmark to be displayed on and off (flickering). Always make sure that the iPod® is connected properly.
- An iPod nano® (1st Generation) may remain in fast forward or rewind mode if it is connected during a seek operation. In this case, please manually reset the iPod®.
- An iPod nano® (2nd Generation) will continue to fast-forward or rewind if it is disconnected during a seek operation.
- An incorrect song title may appear when the Play Mode is changed while using an iPod nano® (2nd Generation)
- Audiobooks may not play in the same order as they appear on an iPod®.
- Large video files cause slow responses in an iPod®. The vehicle center display may momentarily black out, but will soon recover.
- If an iPod® automatically selects large video files while in the shuffle mode, the vehicle center display may momentarily black out, but will soon recover.

Compressed Audio Files (MP3/WMA/AAC/ATRAC3)

Explanation of terms:

- MP3 — MP3 is short for Moving Pictures Experts Group Audio Layer 3. MP3 is the most well known compressed digital audio file format. This format allows for near "CD quality" sound, but at a fraction of the size of normal audio files. MP3 conversion of an audio track can reduce the file size by approximately a 10:1 ratio (Sampling: 44.1 kHz, Bit rate: 128 kbps) with virtually no perceptible loss in quality. The compression reduces certain parts of sound that seem inaudible to most people.
- WMA — Windows Media Audio (WMA) is a compressed audio format created by Microsoft as an alternative to MP3. The WMA codec offers greater file compression than the MP3 codec, enabling storage of more digital audio tracks in the same amount of space when compared to MP3s at the same level of quality.

- AAC/M4A — Advanced Audio Coding (AAC) is a lossy audio compression format. Audio files that have been encoded with AAC are generally smaller in size and deliver a higher quality of sound than MP3.
- Bit rate — Bit rate denotes the number of bits per second used by a digital music file. The size and quality of a compressed digital audio file is determined by the bit rate used when encoding the file.
- Sampling frequency — Sampling frequency is the rate at which the samples of a signal are converted from analog to digital (A/D conversion) per second.
- Multisession — Multisession is one of the methods for writing data to media. Writing data once to the media is called a single session, and writing more than once is called a multisession.
- ID3/WMA Tag — The ID3/WMA tag is the part of the encoded MP3 or WMA file that contains information about the digital music file such as song title, artist, album title, encoding bit rate, track time duration, etc. ID3 tag information is displayed on the Album/Artist/Track title line on the display.

* Windows® and Windows Media® are registered trademarks or trademarks of Microsoft Corporation in the United States of America and/or other countries.

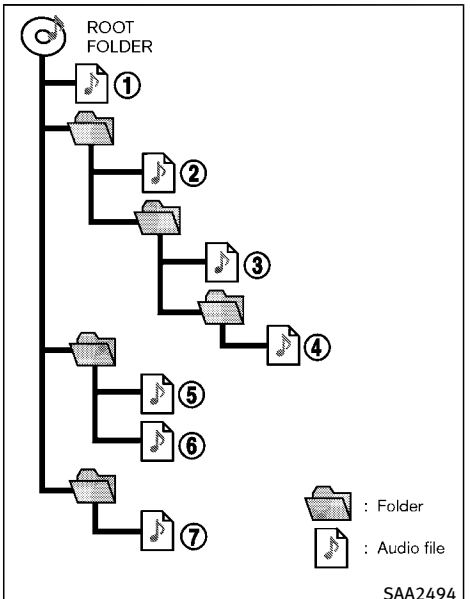

Playback order:

- The folder names of folders not containing compressed audio files are not shown in the display.
- If there is a file in the top level of a disc/USB, “Root Folder” is displayed.

- The playback order is the order in which the files were written by the writing software, so the files might not play in the desired order.
- Music playback order of compressed audio files is as illustrated.

Specification chart:

Supported media			CD, CD-R, CD-RW, DVD-ROM*5, DVD±R*5, DVD±RW*5, DVD±R DL*5, USB2.0
Supported file systems			CD, CD-R, CD-RW, DVD-ROM*5, DVD±R*5, DVD±RW*5, DVD±R DL*5: ISO9660 LEVEL1, ISO9660 LEVEL2, Romeo, Joliet * ISO9660 Level 3 (packet writing) is not supported. * Files saved using the Live File System component (on a Windows Vista-based computer) are not supported. UDF Bridge (UDF1.02+ISO9660), UDF1.5, UDF2.0 * VDF1.5/VDF2.0 (packet writing) is not supported.
			USB memory: FAT16, FAT32
Supported versions*1	MP3	Version	MPEG1 Audio Layer 3
		Sampling frequency	8 kHz - 48 kHz
		Bit rate	8 kbps - 320 kbps, VBR*4
	WMA*2	Version	WMA7, WMA8, WMA9
		Sampling frequency	32 kHz - 48 kHz
		Bit rate	32 kbps - 192 kbps, VBR (Ver.9)*4
	AAC*5	Version	MPEG-AAC
		Sampling frequency	8 kHz - 96 kHz
		Bit rate	16 kbps - 320 kbps, VBR*4
Tag information (Song title and Artist name)			ID3 tag VER1.0, VER1.1, VER2.2, VER2.3, VER2.4 (MP3 only)
			WMA tag (WMA only)
Folder levels			Models with navigation system: Folder levels: 8, Folders: 512 (including root folder), Files: 5,000 Models without navigation system: Folder levels: 8, Folders and files: 999 (Max. 255 files for one folder)
Displayable character codes*3			01: ASCII, 02: ISO-8859-1, 03: UNICODE (UTF-16 BOM Big Endian), 04: UNICODE (UTF-16 Non-BOM Big Endian), 05: UNICODE (UTF-8), 06: UNICODE (Non-UTF-16 BOM Little Endian), 07: SHIFT-JIS

*1 Files created with a combination of 48 kHz sampling frequency and 64 kbps bit rate cannot be played.

*2 Protected WMA files (DRM) cannot be played.

*3 Available codes depend on what kind of media, versions and information are going to be displayed.
*4 When VBR files are played, the playback time may not be displayed correctly.
*5 Models with navigation system.

Troubleshooting guide:

Symptom	Cause and Countermeasure
Cannot play	Check if the disc or USB device was inserted correctly.
	Check if the disc is scratched or dirty.
	Check if there is condensation inside the player, and if there is, wait until the condensation is gone (about 1 hour) before using the player.
	If there is a temperature increase error, the player will play correctly after it returns to the normal temperature.
	If there is a mixture of music CD files (CD-DA data) and compressed audio files on a CD, only the music CD files (CD-DA data) will be played.
	Files with extensions other than “.MP3 (.mp3)”, “.WMA (.wma)”, “.AAC (.aac)”, “.M4A (.m4a)”, or “.AA3 (.aa3)” cannot be played. In addition, the character codes and number of characters for folder names and file names should be in compliance with the specifications.
	Check if the disc or the file is generated in an irregular format. This may occur depending on the variation or the setting of compressed audio writing applications or other text editing applications.
	Check if the finalization process, such as session close and disc close, is done for the disc.
	Check if the disc or USB device is protected by copyright.
Poor sound quality	Check if the disc is scratched or dirty.
It takes a relatively long time before the music starts playing.	If there are many folder or file levels on the disc or USB device, some time may be required before the music starts playing.
Music cuts off or skips	The writing software and hardware combination might not match, or the writing speed, writing depth, writing width, etc., might not match the specifications. Try using the slowest writing speed.
Skipping with high bit rate files	Skipping may occur with large quantities of data, such as for high bit rate data.
Move immediately to the next song when playing.	If an unsupported compressed audio file has been given a supported extension like .MP3, or when play is prohibited by copyright protection, the player will skip to the next song.
The songs do not play back in the desired order.	The playback order is the order in which the files were written by the writing software, so the files might not play in the desired order.
	Random/Shuffle may be active on the audio system or on a USB device.

Compressed Video Files (models with navigation system)

Explanation of terms:

- DivX® - DivX® refers to the DivX® codec owned by DivX, Inc. used for a lossy compression of video based on MPEG-4.
- AVI - AVI stands for Audio Video Interleave. It is a standard file format originated by Microsoft Corporation. A ".divx" encoded file can be saved into the ".avi" file format for playback on this system if it meets the requirements stated in the table in this section. However, not all the ".avi" files are playable on this system since different encodings can be used than the DivX® codec.
- ASF - ASF stands for Advanced Systems Format. It is a file format owned by Microsoft Corporation. Note: Only ". asf" files that meet the requirements stated in the table in this section can be played.
- Bit rate — Bit rate denotes the number of bits per second used by a digital video file. The size and quality of a compressed digital audio file is determined by the bit rate used when encoding the file.

Requirement for Supporting Video Playback:

Media	CD, CD-R, CD-RW, DVD, DVD±R, DVD±RW, DVD±RW DL, USB 2.0 Memory		
File Systems	CD, CD-R, CD-RW, DVD, DVD±R, DVD±RW, DVD±RW DL	ISO9660 LEVEL1, ISO9660 LEVEL2, Romeo, Joliet, UDF Bridge (UDF1.02 +ISO9660), UDF1.5, UDF2.0 - ISO9660 Level 3 (packet writing) is not supported. - Files saved using the Live File System component (on a Windows Vista-based computer) are not supported. - VDF1.5/VDF2.0 (packet writing) is not supported.	
	USB Memory	FAT16, FAT32	
File Types	.divx, .avi	Video Codecs	DivX3, DivX4, DivX5, DivX6
		Audio Codecs	MP3, MPEG2.5 Audio Layer3, AC3, LPCM
	.asf	Video Codec	ISO-MPEG4
		Audio Codec	G.726
Bit Rates	.divx, .avi	Maximum Average	4Mbps
		Maximum Peak	8Mbps
Resolution	.divx, .avi	Minimum	32 × 32
		Maximum	720 × 480
	.asf	Minimum	32 × 32
		Maximum	720 × 576

Bluetooth streaming audio (models with navigation system)

Bluetooth® is a trademark owned by Bluetooth SIG, Inc. and licensed to Clarion Co., Ltd.

- Some Bluetooth® audio devices may not be recognized by the in-vehicle audio system.
- It is necessary to set up the wireless connection between a compatible Bluetooth® audio device and the in-vehicle Bluetooth® module before using the Bluetooth streaming audio.
- Operating procedure of the Bluetooth streaming audio will vary depending on the device. Make sure it is understood how to operate an audio device before using it with this system.
- The Bluetooth streaming audio may be stopped under the following conditions:
  - Receiving a hands-free call.
  - Checking the connection to the hands-free phone.
- Do not place a Bluetooth® audio device in an area surrounded by metal or far away from the in-vehicle Bluetooth® module to prevent tone quality degra-

dation and wireless connection disruption.

- While an audio device is connected through a Bluetooth® wireless connection, the battery power of the device may discharge quicker than usual.
- This system supports the Bluetooth® Audio Distribution Profile (A2DP, AVRCP).
- Wireless LAN (Wi-Fi) and the Bluetooth® functions share the same frequency band (2.4 GHz). Using the Bluetooth® and the wireless LAN functions at the same time may slow down or disconnect the communication and cause undesired noise. It is recommended that you turn off the wireless LAN (Wi-Fi) when using the Bluetooth® functions.

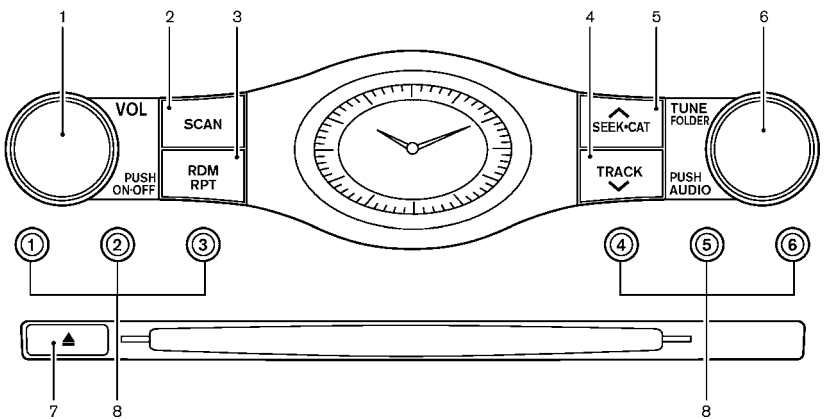

SAA2724

1. ON·OFF/VOL (volume) control knob
2. Radio SCAN button
3. RDM (random) RPT (repeat) play button
4. TRACK button
5. SEEK·TRACK button
6. Radio tuning / MP3/WMA/AAC folder selector / AUDIO control knob
7. Disc EJECT button
8. Radio station preset and buttons

No satellite radio reception is available unless a SiriusXM Satellite Radio subscription is active.

The audio control buttons are also located on the center multi-function control panel.

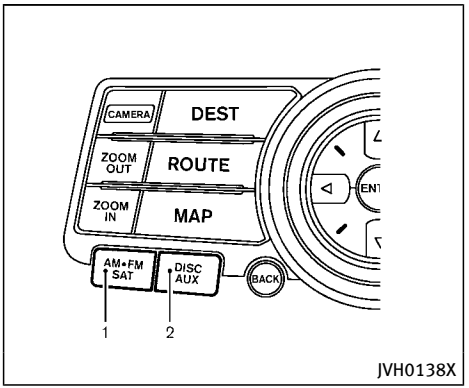

Models with navigation system

1. AM·FM·SAT radio band select button
2. DISC·AUX button

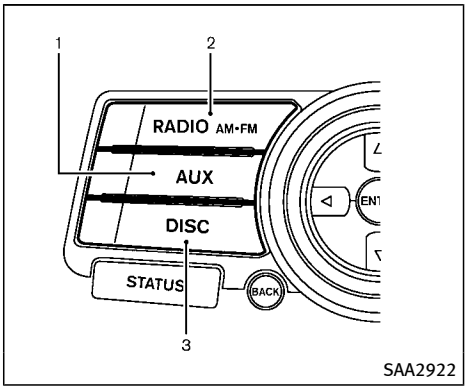

Models without navigation system

1. AUX/Satellite radio band select button
2. RADIO AM·FM band select button
3. DISC button

FM-AM-SAT RADIO WITH COMPACT DISC (CD) PLAYER

For all operation precautions, see “Audio operation precautions” (P.4-52).

The satellite radio mode requires an active SiriusXM Satellite Radio subscription. The satellite radio is not available in Alaska, Hawaii and Guam.

It may take some time to receive the

activation signal after subscribing the SiriusXM Satellite Radio. After receiving the activation signal, an available channel list will be automatically updated in the radio. Push the ignition switch from LOCK to ACC to update the channel list.

Audio main operation

Head unit:

The auto loudness circuit enhances the low and high frequency ranges automatically in both radio reception and CD playback.

ON·OFF/Volume control:

Push the ignition switch to the ACC or ON position, and then push the ON·OFF button while the system is off to turn on the last audio source, which was playing immediately before the system was turned off. While the system is on, pushing the ON·OFF button turns the system off.

Turn the VOL control knob to adjust the volume.

Adjusting tone quality and speaker balance:

To adjust Bass, Treble, Balance and Fade, push the Audio control knob. When the display shows the setting you want to change (Bass, Treble, Balance and Fade), rotate the Audio control knob to set the desired setting. For the other setting methods, see "How to use SETTING button" (P.4-15).

Switching the display:

- Models with navigation system

Pushing the DISC·AUX button will switch the displays as follows:

iPod®/USB → CD/DVD → Bluetooth® streaming audio → iPod®/USB

- Models without navigation system

Pushing the AUX button will switch the display as follows:

USB/iPod® → XM1 → XM2 → XM3 → USB/iPod®

FM-AM-SAT radio operation

When the radio band select button is pushed while the ignition switch is in the ACC or ON position, the radio will come on at the channel last played.

The last channel played will also come on when the ON·OFF button is pushed to ON.

The satellite radio is not available in Alaska, Hawaii and Guam.

If another audio source is playing when the radio or satellite band select button is turned to ON, the audio source will automatically be turned off and the last radio channel played will come on.

When the stereo broadcast signal is weak, the radio will automatically change from stereo to monaural reception.

RADIO AM·FM radio (AM/FM) or AM·FM SAT radio (FM/AM/SAT) band select :

Pushing the RADIO AM·FM or AM·FM·SAT radio band select button will change the band as follows:

- Models with navigation system

AM → FM1 → FM2 → XM1 → XM2 → XM3 → AM

- Models without navigation system

AM → FM1 → FM2 → AM

AUX radio (SAT) band select (models without navigation system):

Push the satellite radio band select button to select the satellite radio mode XM1, XM2 or XM3.

TUNE (Tuning):

- For AM and FM radio

  Turn the radio tuning knob for manual tuning.

- For SiriusXM Satellite Radio
  Turn the radio tuning knob to seek channels from all of the categories when any category is not selected.

SEEK·CAT TRACK SEEK tuning/CATEGORY (CAT):

- For AM and FM radio
  Push the SEEK·CAT or TRACK button to tune from low to high or high to low frequencies and to stop at the next broadcasting station.
- For SiriusXM Satellite Radio
  Push the SEEK·CAT or TRACK button to tune to the first channel of the next or previous category.

During satellite radio reception, the following notices will be displayed under certain conditions.

- NO SIGNAL (No signal is received while the SAT tuner is connected.)
- OFF AIR (Broadcasting signed off)
- CHECK ANTENNA (Antenna connection error)
- LOADING (When the initial setting is performed)
- UPDATING (When the satellite radio subscription is not active)

SCAN SCAN tuning:

Push the radio SCAN button to tune from low to high frequencies and stop at each broadcasting station/channel for 5 seconds. Pushing the button again during this 5 seconds period will stop SCAN tuning and the radio will remain tuned to that station/channel.

If the radio SCAN button is not pushed within 5 seconds, SCAN tuning moves to the next station/channel.

① to ⑥ Station memory operations:

12 stations/channels can be set for the FM band (6 each for FM1 and FM2), 18 for SiriusXM Satellite Radio (6 each for XM1, XM2 and XM3) and 6 stations can be set for the AM band.

1. Choose the radio band using the radio band select button.
2. Tune to the desired station/channel using the SEEK·CAT, TRACK, radio SCAN button or the radio tuning knob.
3. Push and hold the desired station preset button ① to ⑥ until the radio mutes.
4. The station indicator will then come on and the sound will resume. Memorizing is now complete.
5. Other buttons can be set in the same manner.

If the battery cable is disconnected, or if the fuse opens, the radio memory will be erased. In that case, reset the desired stations/channels.

List (AM and FM radio) (models with navigation system):

When the “List” key on the display is selected while the FM or AM radio is being played, the preset station list will be displayed.

If 1 of the 6 preset stations listed is touched and held, the current station will be stored as the new preset.

Menu (SiriusXM Satellite Radio) (models with navigation system):

When the “Menu” key on the display is selected while the SiriusXM Satellite Radio is being played, the menu list will be displayed.

The following items are available.

- Preset List
  Displays the preset channel list. If 1 of the 6 preset stations listed is touched and held, the current station will be

stored as the new preset.

- Customize Channel List

  Selects specific channels to skip while using the TUNE, SEEK/CATEGORY or Menu-Categories feature.
- Favorite Artists & Songs

  Stores the current artist or song that is being played. Touch the “Alert” key to be reminded when the stored artist or song is playing on a station while listening to SiriusXM.
- Categories

  Selecting a category will go to the first channel in that category as defined by SiriusXM Satellite Radio.
- Direct Tune

  Inputs the channel number by using a keypad.

Text (models without navigation system):

When the “Text” key is selected with the INFINITI controller on the display and then the ENTER button is pushed while the satellite radio is being played, the text information listed below will be displayed on the screen.

- CH Name
- Category
- Name
- Title
- Other

Compact Disc (CD) player operation

Push the ignition switch to the ACC or ON position and insert the Compact Disc (CD) into the slot with the label side facing up. The CD will be guided automatically into the slot and start playing.

After loading the CD, the number of tracks on the CD and the play time will appear on the display.

If the radio is already operating, it will automatically turn off and the CD will play.

If the system has been turned off while the CD was playing, pushing the ON·OFF button will start the CD.

Do not use 3.1 in (8 cm) discs.

DISC AUX or DISC PLAY:

When the DISC·AUX or DISC button is pushed with the system off and the CD loaded, the system will turn on and the CD will start to play.

When the DISC·AUX or DISC button is pushed with the CD loaded and the radio playing, the radio will automatically be turned off and the CD will start to play.

Menu (models with navigation system):

When the “Menu” key on the display is selected while the CD is being played, the menu screen will be displayed. The following menu options are available.

- Folder List (for CD with compressed audio files)

  Displays the folder list.
- Track List

  Displays the track list.
- Play Mode

  Select a play mode from the following items.

  — Normal

  — 1 Folder Repeat (for CD with compressed audio files)

  — 1 Track Repeat

  — 1 Disc Random

  — 1 Folder Random (for CD with compressed audio files)

Text (models without navigation system):

When the “Text” key is selected in the screen using the INFINITI controller and then the ENTER button is pushed while the CD is being played, the music information below will be displayed on the screen.

CD:

- Disc title
- Track title

CD with compressed audio files:

- Folder title
- File title
- Song title
- Album title
- Artist

SEEK-CAT / TRACK Next/Previous Track and Fast-Forward/Rewind:

Push the FF or REW button for more than 1.5 seconds while a CD is being played to fast-forward or rewind through the track. When the button is released, the CD will return to normal play speed.

When the FF button is pushed for less than 1.5 seconds while a CD is being played, the next track on the CD will be played.

When the REW button is pushed for less than 1.5 seconds within 3 seconds after the current track started playing, the previous track will be played.

When the REW button is pushed for less than 1.5 seconds after 3 seconds from when the current track started playing, the beginning of the current track will be played.

RDM RPT REPEAT (RPT), RANDOM (RDM):

When the RPT button is pushed while the CD is played, the play pattern can be changed as follows:

(CD)

(CD with compressed audio files)

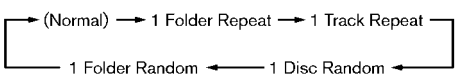

CD EJECT:

When the disc EJECT button is pushed with the CD loaded, the CD will be ejected.

When this button is pushed while the CD is being played, the CD will be ejected.

If the CD comes out and is not removed, it will be pulled back into the slot to protect it.

DVD (Digital Versatile Disc) PLAYER OPERATION (models with navigation system)

Precautions

Start the engine when using the DVD entertainment system.

Movies will not be shown on the front display while the vehicle is in any drive position to reduce driver distraction. Audio is available when a movie is played. To view movies in the front display, stop the vehicle in a safe location, move the shift lever to the P (Park) position and apply the parking brake.

WARNING

- **The driver must not attempt to operate the DVD system or wear the headphones while the vehicle is in motion so that full attention may be given to vehicle operation.**
- **Do not attempt to modify the system to display a movie on the front screen while the vehicle is being driven. Doing so may distract the driver and may cause a collision and serious personal injury or**

death.

CAUTION

- **Only operate the DVD while the vehicle engine is running. Operating the DVD for extended periods of time with the engine OFF can discharge the vehicle battery.**
- **Do not allow the system to get wet. Excessive moisture such as spilled liquids may cause the system to malfunction.**
- **While playing VIDEO-CD media, this DVD player does not guarantee complete functionality of all VIDEO-CD formats.**

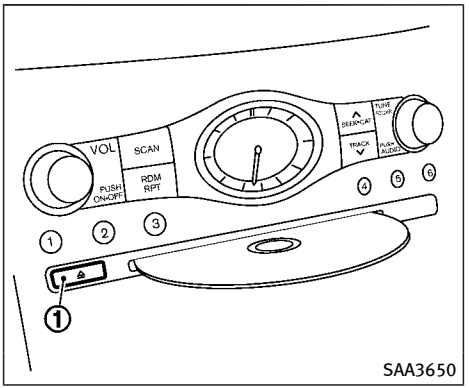

DVD drive

The DVD slot is located on the center INFINITI control panel. Insert a DVD into the slot with the label side facing up. The DVD will be guided automatically into the slot.

When ejecting the DVD, push the EJECT button ⏏ (1).

Display settings

To adjust the front display mode, push the **SETTING** button while the DVD is being played, select the “Others” key and then select the “Display” key.

To adjust the display ON/OFF, brightness, tint, color and contrast, select the “Display Adjustment” key and then select each key.

Then you can adjust each item using the INFINITI controller. After changes have been made push the BACK button to save the setting.

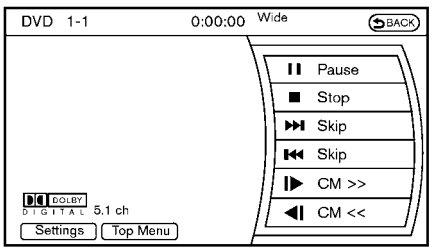

SAA2497

Playing a DVD

DISC·AUX button:

Park the vehicle in a safe location for the front seat occupants to operate the DVD drive while watching the images.

Push the DISC·AUX button on the instrument panel and turn the display to the DVD mode.

When a DVD is loaded, it will be replayed automatically.

The operation screen will be turned on when the DISC·AUX button located on the instrument panel is pushed while a DVD is being played, and it will turn off automatically after a period of time. To turn it on again, push the DISC·AUX button again.

DVD operation keys:

When the DVD is playing without the operation screen being shown, you may use the touch screen to select items from the displayed video. You may also use the INFINITI controller to select an item from the displayed video. When the operation screen is being shown, use the INFINITI controller or touch screen to select an item from the displayed menus.

PAUSE:

Select the " ❚❚ " key to pause the DVD. To resume playing the DVD, use the "PLAY" key.

PLAY:

Select the " ▶ " key to start playing the DVD, for example, after pausing the DVD.

STOP:

Select the " ■ " key to stop playing the DVD.

Next/Previous Chapter:

Select the " ▶▶| " or " |◀◀ " key to skip the chapter(s) of the disc forward/backward. The chapters will advance/go back the number of times this key is selected.

Commercial Skip:

This function is only for DVD-VIDEO, DVD-VR. Select the " |▶ " or " ◀| " key to skip forward or backwards by the set amount as defined in the DVD Settings menu.

Top Menu:

When the "Top Menu" key is selected in the screen while a DVD is being played, the top menu specific to each disc will be displayed. For details, see the instructions on the disc.

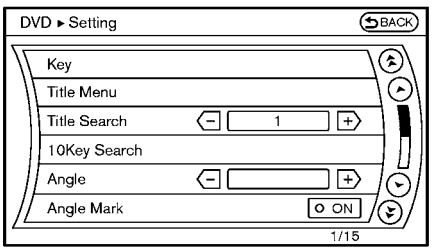

SAA2498

Example

DVD settings

Select the “Settings” key to adjust the following settings.

Key (DVD-VIDEO):

Keys for the DVD menu operation are displayed.

: Move the cursor to select a DVD menu.

Enter: Enter the selected menu.

Move: Change the display location by moving the operation key.

Back: Return to the previous screen.

Hide: Hide the operation key.

Title Menu (DVD-VIDEO):

Some menus specific to each disc will be shown. For details, see the instructions on the disc.

Title Search (DVD-VIDEO, DVD-VR):

The scene with the specified title will be displayed each time the “+” side or “–” side is selected.

Group Search (VIDEO CD):

A scene in the specified group will be displayed each time the “+” side or “–” side is selected.

10 Key Search (DVD-VIDEO, VIDEO-CD, CD-DA, DVD-VR):

Select the “10 Key Search” key to open the number entry screen. Input the number to be searched and select the “OK” key. The specified Title/Chapter or Group/Track will be played.

Select No. (VIDEO-CD):

Select the “Select No.” key to open the number entry screen. Input the number to be searched and select the “OK” key. The specified scene will be played.

Angle (DVD-VIDEO):

If the DVD contains different angles (such as moving images), the current image angle can be switched to another one. Select the “Angle” key. The angle will change each time the “+” side or “–” side is selected.

Angle Mark (DVD-VIDEO):

When this item is turned on, an angle mark will be shown on the bottom of the screen if the scene can be seen from a different angle.

Menu Skip (DVD-VIDEO):

DVD menus are automatically configured and the contents will be played directly when the “Menu Skip” key is turned on. Note that some discs may not be played directly even if this item is turned on.

CM Skip (DVD-VIDEO):

Select the “CM Skip” key. Choose the setting time from 15, 30 or 60 seconds by selecting the “+” side or “–” side.

DRC (DVD-VIDEO, DVD-VR):

DRC (Dynamic Range Compression) automatically adjusts the soundtrack volume level to maintain a more even sound to the speakers.

DVD Language (DVD-VIDEO, VIDEO-CD):

Select the “DVD Language” key to open the number entry screen. Input the number corresponding to the preferred language and select the “OK” key. The DVD top menu language will be changed to the one specified.

Display:

To adjust the image quality of the screen, select the preferred adjustment items.

Audio:

Select the preferred language for audio.

Subtitle (DVD-VIDEO, DVD-VR):

Select the preferred language for subtitles.

Display Mode (DVD-VIDEO, VIDEO-CD, DVD-VR):

Select from the “Full”, “Wide”, “Normal” or “Cinema” modes.

Title List (DVD-VR):

Select the preferred title from the list.

Play Mode:

Select the preferred play mode.

PG/PL Mode (DVD-VR):

Select the “PG” or “PL” mode.

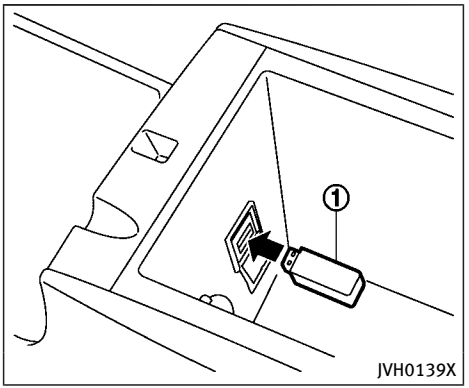

USB (Universal Serial Bus) CONNECTION PORT

Audio main operation

Open the console lid and connect a USB memory ① as illustrated. Then, push the DISC·AUX or AUX button repeatedly to switch to the USB memory mode.

If the system has been turned off while the USB memory was playing, pushing the ON·OFF/VOL control knob will start the USB memory.

WARNING

Do not connect, disconnect or operate the USB device while driving. Doing so can be a distraction. If distracted you could lose control of your vehicle and cause an accident or serious injury.

CAUTION

- **Do not force the USB device into the USB port. Inserting the USB device tilted or up-side-down into the port may damage the port. Make sure that the USB device is connected correctly into the USB port.**
- **Do not grab the USB port cover (if so equipped) when pulling the USB device out of the port. This could damage the port and the cover.**
- **Do not leave the USB cable in a place where it can be pulled unintentionally. Pulling the cable may damage the port.**

Refer to your device manufacturer’s owner information regarding the proper use and care of the device.

SAA2500

File selection (models with navigation system)

When there are both audio and movie files in the USB memory, the mode select screen is displayed. Select the preferred content to play.

When there is only one type of file, the audio or movie operation screen is displayed and starts to play.

If playback of a video file is restricted to a particular number of times, a pop-up screen will appear to confirm whether you want to play the file or not. Answer yes or no as requested by the display.

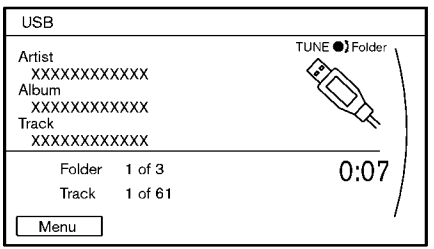

SAA2501

Models with navigation system

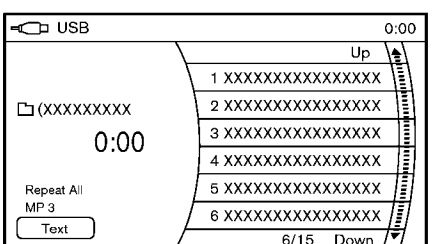

SAA2611

Models without navigation system

Audio file operation

DISC AUX or AUX PLAY:

When the DISC·AUX or AUX button is pushed with the system off and the USB memory inserted, the system will turn on.

If another audio source is playing and a USB memory is inserted, push the DISC·AUX or AUX button repeatedly until the center display changes to the USB memory mode.

SEEK·CAT TRACK Next/Previous File and Fast-Forward/Rewind:

Push the FF or REW button for more than 1.5 seconds while a USB memory is being played to fast-forward or rewind through the track. When the button is released, the USB memory will return to normal play speed.

When the FF button is pushed for less than 1.5 seconds while a USB memory is being played, the next track on the USB memory will be played.

When the REW button is pushed for less than 1.5 seconds within 3 seconds after the current track started playing, the previous track will be played.

When the REW button is pushed for less than 1.5 seconds after 3 seconds from when the current track started playing, the beginning of the current track will be played.

The INFINITI controller can also be used to select tracks when the USB memory is being played.

Folder selection:

To change to another folder in the USB memory, turn the folder selector or choose a folder displayed on the screen using the INFINITI controller.

RDM RPT REPEAT (RPT), RANDOM (RDM):

When the RPT button is pushed while the USB memory is played, the play pattern can be change as follows.

To change the play mode, push the RPT button repeatedly and the mode will change as follows.

Normal → 1 Folder Repeat → 1 Track Repeat → All Random → 1 Folder Random → Normal

Text (models without navigation system):

When the "Text" key is selected on the screen using the INFINITI controller and then the ENTER button is pushed while a USB memory is being played, the music information listed below will be displayed on the screen.

- Folder title
- File title
- Song title
- Album Title
- Artist

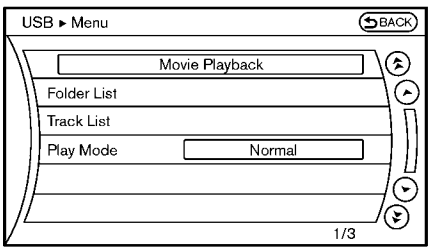

SAA2502

Menu (models with navigation system):

There are some options available during playback. Select one of the following options that are displayed on the screen if necessary. Refer to the following information for each item.

- **Movie Playback**
  Switch to the movie playback mode. This item is displayed only when a USB memory contains movie files.
- **Folder List/Track List**
  Displays the folder or track list. The "Movie Playback" key is also displayed in this list screen, and enables switch-

ing to the movie playback mode.

- **Play Mode**
  Select the preferred play mode.

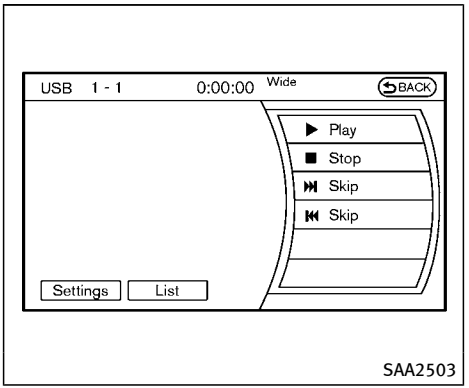

Movie file operation (models with navigation system)

Park the vehicle in a safe location for the front seat occupants to operate the USB memory while watching the images.

DISC AUX PLAY:

When the DISC·AUX button is pushed with the system off and the USB memory inserted, the system will turn on.

If another audio source is playing and a USB memory is inserted, push the DISC·AUX button repeatedly until the center display changes to the USB memory mode.

Operation keys:

To operate the USB memory, select the desired key displayed on the operation screen using the INFINITI controller.

II Pause

Select the "II" key to pause the movie file. To resume playing the movie file, select the "▶" key.

▶ Play

Select the "▶" key to start playing a movie file, for example, after pausing a movie file.

■ STOP

Select the "■" key to stop playing a movie file.

▶▶I Skip (Next chapter)

Select the "▶▶I" key to skip the chapter(s) of the disc forward. The chapters will advance the number of times the ENTER button is pushed.

Skip (Previous chapter)

Select the "⏮" key to skip the chapter(s) of the disc backward. The chapters will go back the number of times the "⏮" key is selected.

List:

Select the "List" key on the movie file operation screen to display the file list.

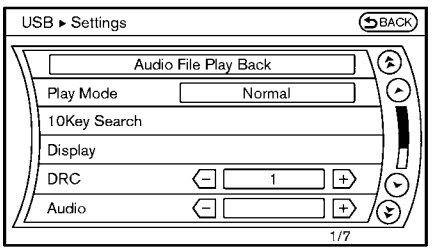

SAA2504

Example

Settings:

Select the "Settings" key to adjust the following settings.

- **Audio File Playback**
  Switch to the audio playback mode. This item is displayed only when the USB memory contains the audio files.
- **Play Mode**
  Select the "Normal" or "1 Track Repeat" play mode.
- **10 Key Search**
  Select the "10 Key Search" key to open the number entry screen.
  Input the number to be searched and select the "OK" key.
  The specified folder/file will be played.
- **Display**
  To adjust the image quality of the screen, select the preferred adjustment items.
- **DRC**
  DRC (Dynamic Range Compression) automatically adjusts the soundtrack volume level to maintain a more even sound to the speakers.
- **Audio**
  Select the preferred language for audio.
- **Subtitle**
  Select the preferred language for subtitle.
- **Display Mode**
  Select the "Normal", "Wide", "Cinema" or "Full" mode.

Bluetooth® STREAMING AUDIO (models with navigation system)

Your INFINITI is equipped with Bluetooth® Streaming Audio. If you have a compatible Bluetooth® device with streaming audio (A2DP profile), you can set up the wireless connection between your Bluetooth® device and the in-vehicle audio system. This connection allows you to listen to the audio from the Bluetooth® device using your vehicle speakers. It also may allow basic control of the device for playing and skipping audio files using the AVRCP Bluetooth profile. All Bluetooth® Devices do not have the same level of controls for AVRCP. Please consult the manual for your Bluetooth® Device for more details.

Once your Bluetooth® device is connected to the in-vehicle audio system, it will automatically reconnect whenever the device is present in the vehicle and you select Bluetooth Audio from your audio system. You do not need to manually reconnect for each usage.

Wireless LAN (Wi-Fi) and the Bluetooth® functions share the same frequency band (2.4 GHz). Using the Bluetooth® and the wireless LAN functions at the same time may slow down or disconnect the communication and cause undesired noise. It is recommended that you turn off the wireless LAN (Wi-Fi) when using the Bluetooth® functions.

Regulatory information

FCC Regulatory information:

- CAUTION: To maintain compliance with FCC's RF exposure guidelines, use only the supplied antenna. Unauthorized antenna, modification, or attachments could damage the transmitter and may violate FCC regulations.
- Operation is subject to the following two conditions:
  1) This device may not cause interference and
  2) This device must accept any interference, including interference that may cause undesired operation of the device

IC Regulatory information:

- Operation is subject to the following two conditions:
  1) This device may not cause interference, and
  2) This device must accept any interference, including interference that may cause undesired operation of the device.
- This Class B digital apparatus meets all requirements of the Canadian Interference-Causing Equipment Regulations.

Bluetooth trademark:

Bluetooth® is a trademark owned by Bluetooth SIG, Inc. and licensed to Clarion Co., Ltd.

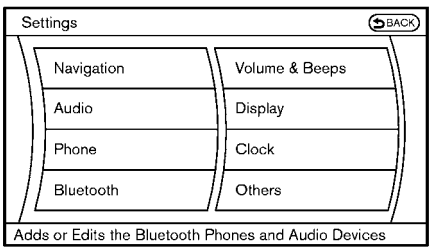

SAA2505

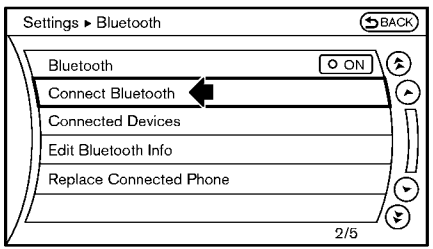

SAA2506

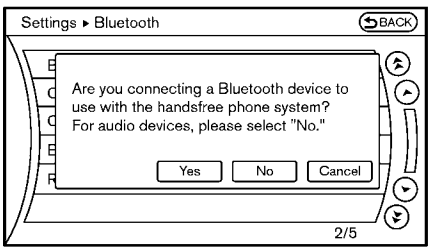

SAA2507

Connecting procedure

1. Push the **SETTING** button and select the "Bluetooth" key.
2. Select the "Connect Bluetooth" key.
3. A confirmation screen will be displayed. Select "No".

   Note: Selecting "Yes" will only connect the hands free phone portion of a Bluetooth® device.

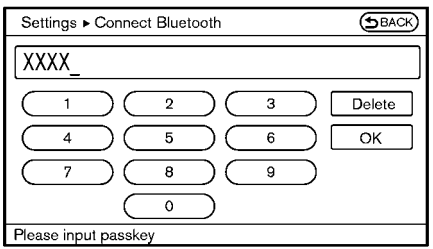

SAA3005

4. When a passkey appears on the screen, operate the compatible Bluetooth® audio device to enter the passkey. The pairing procedure for the audio device varies according to each audio device. See the Bluetooth® audio Owner's Manual for details. When pairing is completed, the screen will return to the Bluetooth® setup display.

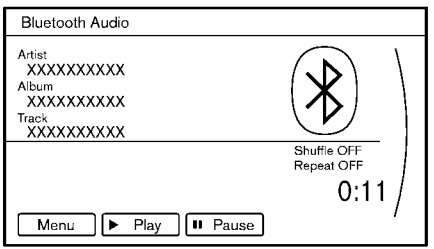

SAA2510

Audio main operation

Push the ignition switch to the ACC or ON position. Then, push the DISC·AUX button repeatedly to switch to the Bluetooth audio mode. If the system has been turned off while the Bluetooth audio device was playing, pushing the ON·OFF/VOL control knob will start the Bluetooth audio device.

The ability to pause, change tracks, fast forward, rewind, randomize and repeat music may be different between devices. Some or all of these functions may not be supported on each device.

DISC AUX DISC·AUX button:

When the DISC·AUX button is pushed with the system off and the Bluetooth audio device connected, the system will turn on. If another audio source is playing and the Bluetooth® audio device is connected, push the DISC·AUX button repeatedly until the display changes to the Bluetooth audio mode.

SEEK·CAT TRACK Next/Previous Track and Fast-Forward/Rewind:

Push the FF or REW button for more than 1.5 seconds while a Bluetooth® audio device is being played to fast-forward or rewind through the track. When the button is released, the Bluetooth® audio device will return to normal play speed.

When the FF button is pushed for less than 1.5 seconds while the Bluetooth® audio device is being played, the next track will be played.

When the REW button is pushed for less than 1.5 seconds within 3 seconds after the current track started playing, the previous track will be played.

When the REW button is pushed for less than 1.5 seconds after 3 seconds from

when the current track started playing, the beginning of the current track will be played.

The INFINITI controller can also be used to select tracks when the Bluetooth® audio play mode screen is shown on the display. (“Bluetooth audio” will be indicated on the header of the screen.)

RDM RPT REPEAT (RPT), RANDOM (RDM):

To change the play mode, push the RDM RPT button repeatedly and the mode changes as follows.

Normal → Shuffle All Tracks → Shuffle Group → Repeat 1 Track → Repeat All Tracks → Repeat Group → Normal

Operation keys:

To operate a Bluetooth® audio device, select a key displayed on the operation screen using the INFINITI controller.

▶ Play

Select the “▶” key to start playing when pausing. Select this key again to pause the audio play.

II Pause

Select the “II” key to pause the Bluetooth® audio device. Select this key again to resume playing.

Play Mode:

The play mode setting display will appear when the “Menu” key is selected.

Choose the preferred play mode from the following items.

- **Shuffle**
  Choose “Shuffle OFF”, “Shuffle All Tracks” and “Shuffle Group”.
- **Repeat**
  Choose from “Repeat OFF”, “Repeat 1 Track”, “Repeat All Tracks” and “Repeat Group”.

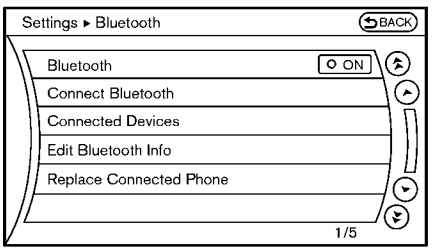

SAA2511

Bluetooth settings

To set up the Bluetooth device system to the preferred settings, push the **SETTING** button and select the “Bluetooth” key.

Bluetooth:

If this setting is turned off, the connection between the Bluetooth devices and the in-vehicle Bluetooth module will be canceled.

Connect Bluetooth:

Connects to the Bluetooth device. See “Connecting procedure” (P.4-80). Up to 5 devices can be registered.

Connected Devices:

Registered devices are shown on the list. Select a Bluetooth device from the list, the following options will be available.

- **Select**

  Select “Select” to connect the selected device to the vehicle. If there is a different device currently connected, the selected device will replace the current device.
- **Edit**

  Rename the selected Bluetooth device using the keypad displayed on the screen. (See “How to use touch screen (models with navigation system)” (P.4-5).)
- **Delete**

  Delete the selected Bluetooth device.

Edit Bluetooth Info:

Change the name broadcasted by this system over Bluetooth. Change the PIN code that is entered when connecting a hands free device to this system.

Replace Connected Phone:

Replace the Bluetooth connection with a connected Bluetooth cellular phone. For details about Hands-Free Phone System, see “Bluetooth® Hands-Free Phone System (models with navigation system)” (P.4-90).

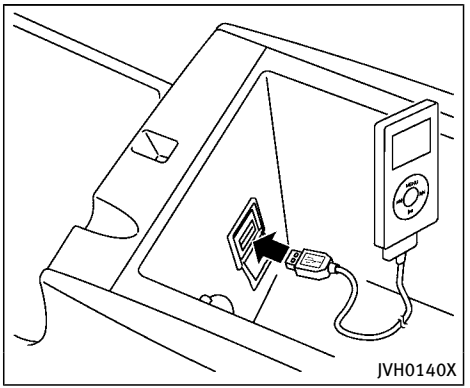

iPod® PLAYER OPERATION

Connecting iPod®

Open the console lid and connect the iPod® cable to the USB connector. If the iPod® supports charging via USB, the battery of the iPod® will be charged while connected to the vehicle.

Depending on the version of the iPod®, the display on the iPod® shows an INFINITI or Accessory Attached screen when the connection is completed. When the iPod® is connected to the vehicle, the iPod® music library can only be operated by the vehicle audio controls.

* iPod® is a trademark of Apple Inc., registered in the U.S. and other countries.

WARNING

Do not connect, disconnect or operate the USB device while driving. Doing so can be a distraction. If distracted you could lose control of your vehicle and cause an accident or serious injury.

CAUTION

- **Do not force the USB device into the USB port. Inserting the USB device tilted or up-side-down into the port may damage the port. Make sure that the USB device is connected correctly into the USB port.**
- **Do not grab the USB port cover (if so equipped) when pulling the USB device out of the port. This could damage the port and the cover.**
- **Do not leave the USB cable in a place where it can be pulled unintentionally. Pulling the cable may damage the port.**

Refer to your device manufacturer's owner information regarding the proper use and care of the device.

Compatibility

The following models are available:

Models with navigation system:

- Fifth generation iPod® (version 1.2.3 or later)
- iPod Classic® (version 1.1.1 or later)
- First generation iPod touch® (version 2.0.0 or later)
- Second generation iPod touch® (version 1.2.3 or later)
- First generation iPod nano® (version 1.3.1 or later)
- Second generation iPod nano® (version 1.1.3 or later)
- Third generation iPod nano® (version 1.1 or later)
- Fourth generation iPod nano® (version 1.0.2 or later)

Models without navigation system:

- Fifth generation iPod® (firmware version 1.3)
- First generation iPod Classic® (firmware version 1.1.2 PC)
- Second generation iPod Classic® (firmware version 2.0 PC)
- First generation iPod touch® (firmware version 2.1)
- Second generation iPod touch® (firmware version 2.1.1)
- First generation iPod nano® (firmware version 1.3.1)
- Second generation iPod nano® (firmware version 1.1.3)
- Third generation iPod nano® (firmware version 1.1 PC)
- Third generation iPhone® (firmware version 2.1)

Make sure that the iPod® version is updated.

Audio main operation

Push the ignition switch to the ACC or ON position. Then, push the DISC·AUX or AUX button repeatedly to switch to the iPod® mode.

If the system has been turned off while the iPod® was playing, pushing the ON·OFF button will start the iPod®.

DISC AUX or AUX PLAY:

When the DISC·AUX or AUX button is pushed with the system off and the iPod® connected, the system will turn on. If another audio source is playing and the iPod® is connected, push the DISC·AUX or AUX button repeatedly until the center display changes to the iPod® mode.

Interface:

The interface for iPod® operation shown on the vehicle center display is similar to the iPod® interface. Use the INFINITI controller and the ENTER or BACK button to play the iPod® with your favorite settings.

The following items can be chosen from the menu list screen. For further information about each item, see the iPod® Owner's Manual.

- Now Playing
- Playlists
- Artists
- Albums
- Songs
- Podcasts
- Genres
- Composers
- Audiobooks
- Shuffle Songs

The following touch-panel buttons shown on the screen are also available:

- MENU : returns to the previous screen.
- ▶II : plays/pauses the music selected.

SEEK·CAT TRACK Next/Previous Track and Fast-Forward/Rewind:

Push the FF or REW button for more than 1.5 seconds while a iPod® is being played to fast-forward or rewind through the track. When the button is released, the iPod® will return to the normal play speed.

When the FF button is pushed for less than 1.5 seconds while the iPod® audio device is being played, the next track will be played.

When the REW button is pushed for less than 1.5 seconds within 3 seconds after the current track started playing, the previous track will be played.

When the REW button is pushed for less than 1.5 seconds after 3 seconds from when the current track started playing, the beginning of the current track will be played.

The INFINITI controller can also be used to select tracks when the iPod® is playing.

RDM RPT REPEAT (RPT), RANDOM (RDM):

When the RPT button is pushed while a track is being played, the play pattern can be changed as follows:

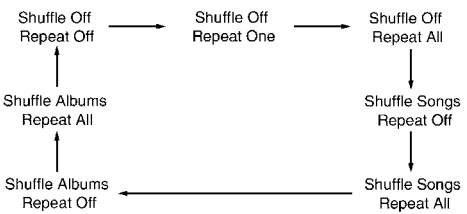

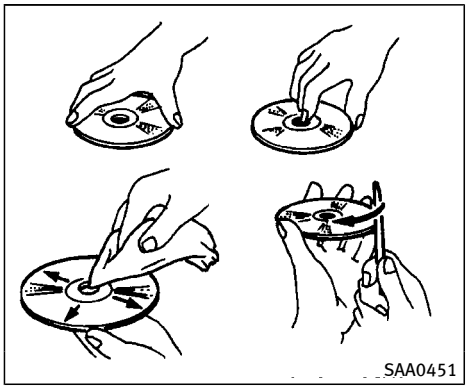

CD/DVD/USB MEMORY CARE AND CLEANING

CD/DVD

- Handle a CD/DVD by its edges. Never touch the surface of the disc. Do not bend the disc.
- Always place the discs in the storage case when they are not being used.
- To clean a disc, wipe the surface from the center to the outer edge using a clean, soft cloth. Do not wipe the disc using a circular motion.

  Do not use a conventional record cleaner or alcohol intended for industrial use.
- A new disc may be rough on the inner and outer edges. Remove the rough edges by rubbing the inner and outer edges with the side of a pen or pencil as illustrated.

USB memory

- Never touch the terminal portion of the USB memory.
- Do not place heavy objects on the USB memory.
- Do not store the USB memory in highly humid locations.
- Do not expose the USB memory to direct sunlight.
- Do not spill any liquids on the USB memory.

Refer to the USB memory Owner's Manual for the details.

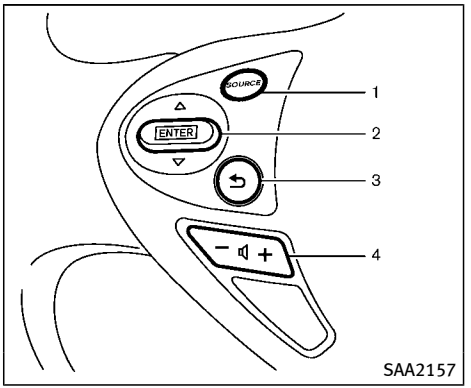

Models with navigation system

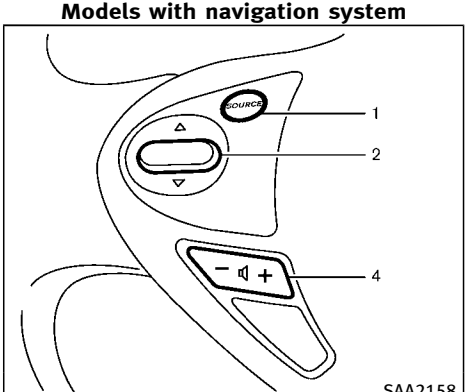

Models without navigation system

1. Audio source switch
2. Menu control switch (models with navigation system) or audio tuning switch (models without navigation system)
3. Back switch
4. Volume control switch

STEERING-WHEEL-MOUNTED CONTROLS FOR AUDIO

Menu control switch (models with navigation system) or audio tuning switch (models without navigation system)

While the display is showing a MAP (navigation systems only), STATUS or Audio screen, tilt the switch upward or downward to select a station, track, CD or folder. For most audio sources, tilting the switch up/down for more than 1.5 seconds provides a different function than tilting up/down for less than 1.5 seconds.

AM and FM radio:

- Tilting up/down for less than 1.5 seconds will scroll up or down through the preset stations.
- Tilting up/down for more than 1.5 seconds will seek up or down to the next station.
- Pushing the menu control switch will show the list of preset stations.

SiriusXM Satellite Radio:

- Tilting up/down for less than 1.5 seconds will scroll up or down through the preset channels.
- Tilting up/down for more than 1.5 seconds will go to the next or previous category.
- Pushing the menu control switch will show the XM Menu.

iPod®:

- Tilting up/down for less than 1.5 seconds will scroll up or down through the track numbers.
- Tilting up/down for more than 1.5 seconds will skip to the next or previous playlist.
- Pushing the menu control switch will show the iPod Menu.

CD:

- Tilting up/down for less than 1.5 seconds will scroll up or down through the track numbers.
- Tilting up/down for more than 1.5 seconds will scroll up or down through the folders (if playing compressed audio files).
- Pushing the menu control switch will show the CD Menu.

DVD (models with navigation system):

- Tilting up/down for less than 1.5 seconds will scroll up or down through the tracks.
- Tilting up/down for more than 1.5 seconds will scroll up or down through the title numbers.
- Pushing the menu control switch will select an item from the DVD display.
- When the transparent operation menu appears, the switch will control the menu.

USB:

- Tilting up/down for less than 1.5 seconds will scroll up or down through the track numbers.
- Tilting up/down for more than 1.5 seconds will scroll up or down through the folders.
- Pushing the menu control switch will show the USB Menu.

Bluetooth streaming audio (models with navigation system):

- Tilting up/down for less than 1.5 seconds will scroll up or down through the track numbers.

BACK switch

Push this switch to go back to the previous screen or cancel the selection if it is not completed.

Volume control switches

Push the upper (+) or lower (–) side switch to increase or decrease the volume.

Audio source switch

Push the source select switch to change the mode to available audio source.

Media not connected/inserted will be skipped.

ANTENNA

Window antenna

The antenna pattern is printed inside the rear window.

CAUTION

- **Do not place metalized film near the rear window glass or attach any metal parts to it. This may cause poor reception or noise.**
- **When cleaning the inside of the rear window, be careful not to scratch or damage the rear window antenna. Lightly wipe along the antenna with a dampened soft cloth.**

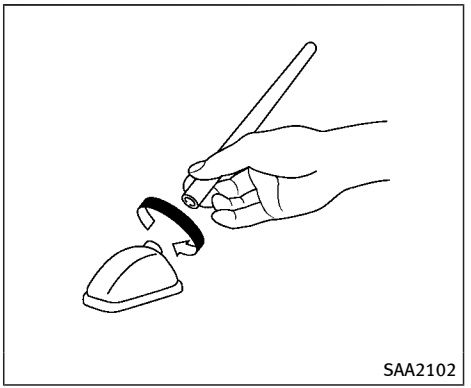

Roof antenna

Removing the antenna:

You can remove the antenna if necessary.

Hold the bottom of the antenna and remove by turning counterclockwise.

To install the antenna, turn the antenna clockwise and tighten.

CAUTION

- **To avoid damaging or deforming the antenna, be sure to remove the antenna under the following conditions.**

— The vehicle enters an automatic car wash.

— The vehicle enters a garage with a low ceiling.

— The vehicle is covered with a car cover.

- Always properly tighten the antenna rod during installation. Otherwise, the antenna rod may break during vehicle operation.

CAR PHONE OR CB RADIO

When installing a car phone or a CB radio in your vehicle, be sure to observe the following cautions, otherwise the new equipment may adversely affect the electronic control modules and electronic control system harness.

WARNING

- A cellular phone should not be used for any purpose while driving so full attention may be given to vehicle operation. Some jurisdictions prohibit the use of cellular phones while driving.
- If you must make a call while your vehicle is in motion, the hands-free cellular phone operational mode (if so equipped) is highly recommended. Exercise extreme caution at all times so full attention may be given to vehicle operation.
- If a conversation in a moving vehicle requires you to take notes, pull off the road to a safe location and stop your vehicle before doing so.

CAUTION

- Keep the antenna as far away as possible from the electronic control modules.
- Keep the antenna wire more than 8 in (20 cm) away from the electronic control system harness. Do not route the antenna wire next to any harness.
- Adjust the antenna standing-wave ratio as recommended by the manufacturer.
- Connect the ground wire from the CB radio chassis to the body.
- For details, consult an INFINITI retailer.

Bluetooth® HANDS-FREE PHONE SYSTEM (models with navigation system)

WARNING

- **Use a phone after stopping your vehicle in a safe location. If you have to use a phone while driving, exercise extreme caution at all times so full attention may be given to vehicle operation.**
- **If you find yourself unable to devote full attention to vehicle operation while talking on the phone, pull off the road to a safe location and stop your vehicle before doing so.**

CAUTION

To avoid draining the vehicle battery, use a phone after starting the engine.

Your INFINITI is equipped with Bluetooth® Hands-Free Phone System. If you are an owner of a compatible Bluetooth® enabled cellular phone, you can set up the wireless connection between your cellular phone and the in-vehicle phone module. With Bluetooth® wireless technology, you can make or receive a telephone call with your cellular phone in your pocket.

Once a cellular phone is connected to the in-vehicle phone module, no phone connecting procedure is required anymore. Your phone is automatically connected with the in-vehicle phone module when the ignition switch is pushed to the ON position with the registered cellular phone turned on and carried in the vehicle.

You can register up to 5 different Bluetooth® cellular phones in the in-vehicle phone module. However, you can talk on only one cellular phone at a time.

The INFINITI Voice Recognition system supports the phone commands, so dialing a phone number using your voice is possible. For more details, see “INFINITI Voice Recognition System (models with navigation system)” (P.4-115).

Before using the Bluetooth® Hands-Free Phone System, refer to the following notes.

- Wireless LAN (Wi-Fi) and the Bluetooth® functions share the same frequency band (2.4 GHz). Using the Bluetooth® and the wireless LAN functions at the same time may slow down or disconnect the communication and cause undesired noise. It is recommended that you turn off the wireless LAN (Wi-Fi) when using the Bluetooth® functions.
- Set up the wireless connection between a compatible cellular phone and the in-vehicle phone module before using the Bluetooth® Hands-Free Phone System.
- Some Bluetooth® enabled cellular phones may not be recognized by the in-vehicle phone module. Please visit www.InfinitiUSA.com/bluetooth for a recommended phone list.
- You will not be able to use a hands-free phone under the following conditions:
  - Your vehicle is outside of the telephone service area.
  - Your vehicle is in an area where it is difficult to receive radio waves; such as in a tunnel, in an underground parking garage, behind a tall building or in a mountainous area.
  - Your cellular phone is locked in order not to be dialed.
- When the radio wave condition is not ideal or ambient sound is too loud, it may be difficult to hear the other person’s voice during a call.
- Immediately after the ignition switch is pushed to the ON position, it may be impossible to receive a call for a short period of time.

- Do not place the cellular phone in an area surrounded by metal or far away from the in-vehicle phone module to prevent tone quality degradation and wireless connection disruption.
- While a cellular phone is connected through the Bluetooth® wireless connection, the battery power of the cellular phone may discharge quicker than usual.
- If the Bluetooth® Hands-Free Phone System seems to be malfunctioning, please visit www.InfinitiUSA.com/bluetooth for troubleshooting help.
- Some cellular phones or other devices may cause interference or a buzzing noise to come from the audio system speakers. Storing the device in a different location may reduce or eliminate the noise.
- Refer to the cellular phone Owner's Manual regarding the telephone pairing procedure specific to your phone, battery charging, cellular phone antenna, etc.
- The antenna display on the monitor will not coincide with the antenna display of some cellular phones.
- Keep the interior of the vehicle as quiet as possible to hear the caller's voice clearly as well as to minimize its echoes.
- If reception between callers is unclear, adjusting the incoming or outgoing call volume may improve the clarity.

REGULATORY INFORMATION

FCC Regulatory information

- CAUTION: To maintain compliance with FCC's RF exposure guidelines, use only the supplied antenna. Unauthorized antenna, modification, or attachments could damage the transmitter and may violate FCC regulations.
- Operation is subject to the following two conditions:

1. this device may not cause interference and
2. this device must accept any interference, including interference that may cause undesired operation of the device

IC Regulatory information

- Operation is subject to the following two conditions: (1) this device may not cause interference, and (2) this device must accept any interference, including interference that may cause undesired operation of the device.
- This Class B digital apparatus meets all requirements of the Canadian Interference-Causing Equipment Regulations.

Bluetooth trademark:

Bluetooth® is a trademark owned by Bluetooth SIG, Inc., and licensed to Clarion Co., Ltd.

VOICE COMMANDS

You can use voice commands to operate various Bluetooth® Hands-Free Phone System features using the INFINITI Voice Recognition system.

For more details, see "INFINITI Voice Recognition System (models with navigation system)" (P.4-115).

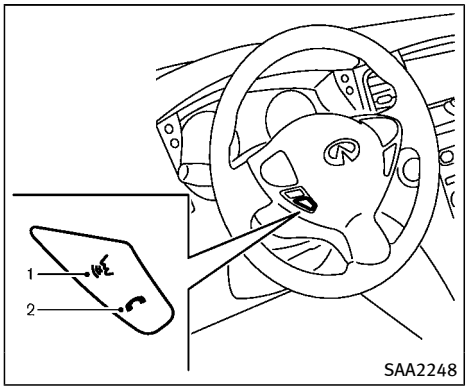

CONTROL BUTTONS

1. TALK button
2. PHONE SEND button

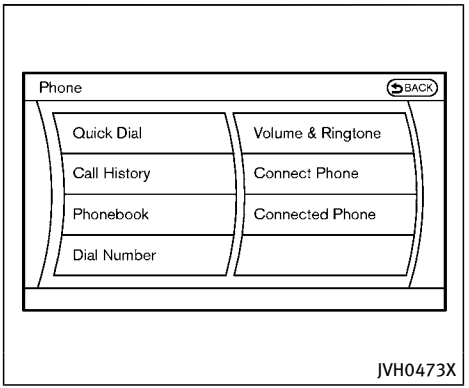

CONNECTING PROCEDURE

1. Push the button, and select the “Connect Phone” key.

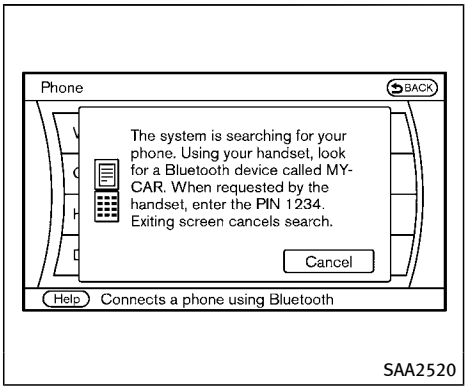

2. When a PIN code appears on the screen, operate the compatible Bluetooth® cellular phone to enter the PIN code.

   The connecting procedure of the cellular phone varies according to each cellular phone. See the cellular phone Owner’s Manual for the details. You can also visit

   www.InfinitiUSA.com/bluetooth or call INFINITI Consumer Affairs Department for instructions on pairing INFINITI recommended cellular phones.

   When the connection process is completed, the screen will return to the

Phone menu display.

PHONE SELECTION

Up to 5 cellular phones can be registered to the system. To switch to connect another cellular phone, push button and select the “Connected Phones” key. The registered cellular phones are shown on the list. If you select a cellular phone that is different from the one currently connected, the newly selected phone will be connected to the system.

QUICK DIAL

This vehicle has two phonebooks available for hands-free use. Depending on the phone, the system may automatically download the entire cell phone’s phonebook into the “Phonebook”. For the details about downloading a phonebook, see “Phone setting” (P.4-98). If a phonebook does not automatically download, the Quick Dial may be set for up to 1000 entries. This Quick Dial allows the recording of a name to speak while using voice recognition.

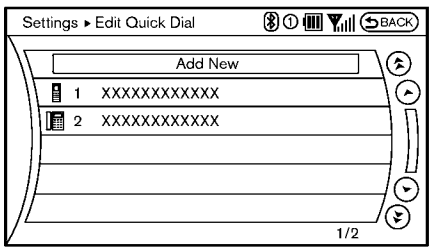

JVH0474X

1. Push the button and select the “Quick Dial” key.
2. Select the “Add New” key at the top of the screen.

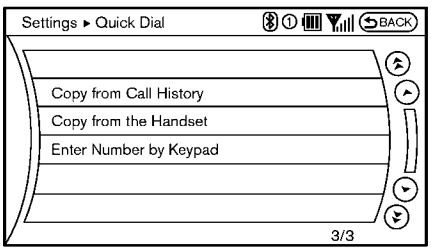

JVH0475X

3. Choose the method for entering the Quick Dial entry. For this example, select “Enter Number by Keypad”.
4. Enter the digits and select the “OK” key. (See “How to use touch screen (models with navigation system)” (P.4-5).)

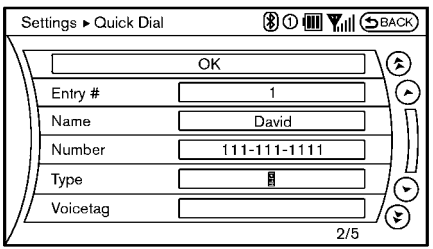

JVH0476X

5. Select the “Voicetag” key to record a name to speak when using the INFINITI Voice Recognition system.
6. Select the “Store” key and prepare to speak the name after the tone.
7. When the voicetag is successfully saved, select the “OK” key to save the Quick Dial entry.
8. After the Quick Dial entry is saved, it will show a screen that is ready to call the number. Press the BACK button to return to the Quick Dial.

There are different methods to input a phone number. Select one of the following options instead of “Enter Number by Keypad” in step 3.

- **Copy from Call History**
  The system will show a list of incoming, outgoing or missed calls that were downloaded from the connected cellular phone (depending on the phone’s compatibility). Select one of these entries to save in the Quick Dial.
- **Copy from the Handset**
  The system will show the connected cellular phone’s phonebook that was downloaded (depending on the phone’s compatibility). Select one of these entries to save in the Quick Dial.

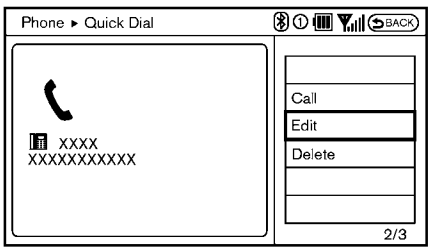

JVH0477X

Editing the Quick Dial

1. Push the button and select the “Quick Dial” key.
2. Select the desired entry from the displayed list.
3. Select the “Edit” key.
4. Select the desired item to change.

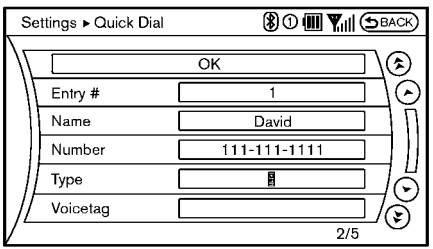

JVH0478X

The following editing items are available:

- Entry #
  Changes the displayed number of the selected entry.
- Name
  Edit the name of the entry using the keypad displayed on the screen.
- Number
  Edit the phone number using the keypad displayed on the screen.
- Type
  Select an icon from the icon list.
- Voicetag
  Confirm and store the voicetag. Voicetags allow easy dialing using the INFINITI Voice Recognition system. (See “INFINITI Voice Recognition System (models with navigation system)” (P.4-115).)

To delete an entry, select the “Delete” key at step 3.

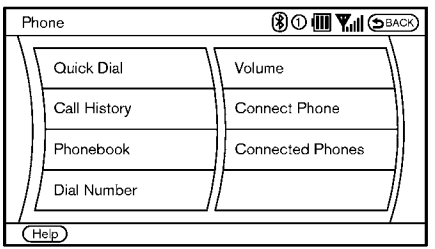

JVH0479X

MAKING A CALL

To make a call, follow this procedure.

1. Push the button on the steering wheel. The “PHONE” screen will appear on the display.
2. Select the “Phonebook” key on the “PHONE” menu.
3. Select the desired entry from the list.
4. Confirm the correct entry by selecting for the correct number from the list.

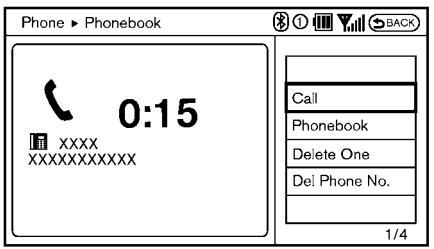

JVH0495X

There are different methods to make a call. Select one of the following options instead of “Phonebook” in step 2 above.

- **Quick Dial**
  Select an entry stored in the Quick Dial.
- **Call History**
  Select an outgoing, incoming or missed call downloaded from your cell phone (depending on your phone’s compatibility).
- **Dial Number**
  Input the phone number manually using the keypad displayed on the screen. (See “How to use touch screen (models with navigation system)” (P.4-5).)

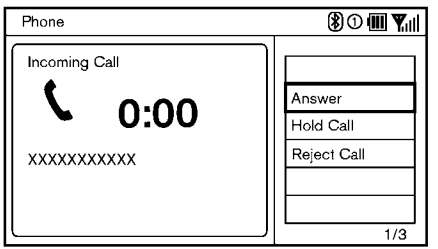

SAA2525

RECEIVING A CALL

When you hear a phone ring, the display will change to the incoming call mode. To receive a call, perform one of the following procedures listed below.

1. Select the “Answer” key.
2. Push the button on the steering wheel.

There are some options available when receiving a call. Select one of the following displayed on the screen.

- **Answer**
  Accept an incoming call to talk.

- **Hold Call**
  Put an incoming call on hold.
- **Reject Call**
  Reject an incoming call.
  To finish the call, perform one of the following procedures listed below.

1. Select the “Hang up” key.
2. Push the button on the steering wheel.

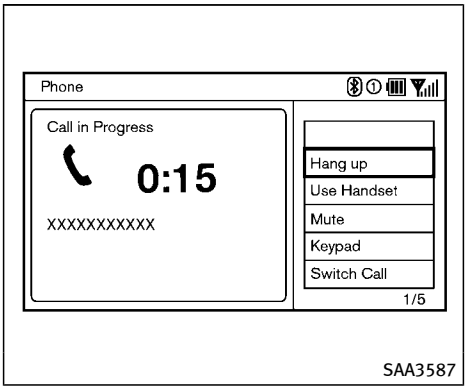

DURING A CALL

There are some options available during a call. Select one of the following displayed on the screen if necessary.

- **Hang up**
  Finish the call.
- **Use Handset**
  Transfer the call to the cellular phone.
- **Mute**
  Mute your voice to the person.
- **Keypad**
  Using the touch tone, send digits to the connected party for using services such as voicemail.
- **Cancel Mute**
  This will appear after “Mute” is selected. Mute will be canceled.
- **Switch Call***
  Select “Switch Call” to answer another incoming call. By selecting “Hang up”, you can end a call and can speak to a caller who is on hold again.

* This function may not be usable, depending on the model of phone

To adjust the person’s voice to be louder or quieter, push the volume control switch (+ or –) on the steering wheel or turn the volume control knob on the instrument panel while talking on the phone. This adjustment is also available in the SETTING mode.

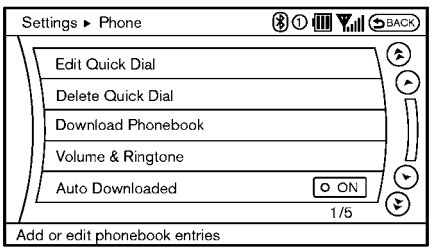

JVH0480X

PHONE SETTING

To set up the Bluetooth® Hands-Free Phone System to your preferred settings, push the **SETTING** button on the instrument panel and select the "PHONE" key.

Edit Quick Dial

To edit the Quick Dial, use the same procedure as described in "Quick Dial" (P.4-93).

Delete Quick Dial

The Quick Dial entries can be deleted all at the same time or one by one.

Download Phonebook

Download the contacts registered in a Bluetooth® cellular phone. Availability of this function depends on each cellular phone. The memory downloading procedure from the cellular phone also varies according to each cellular phone. See cellular phone Owner's Manual for details.

When "Auto Downloaded" is active, the system will automatically re-download the entries registered in the phone everytime it is paired with the vehicle, even after you delete the entries from your vehicle's Phonebook memory.

Volume & Ringtone

The following kinds of phone volume can be set.

- **Ringtone/Incoming Call/Outgoing Call**
  To increase or decrease the volume, select the "Ringtone", "Incoming Call" or "Outgoing Call" key and adjust it with the INFINITI controller.
- **Automatic Hold**
  When this function is activated, an incoming phone call is automatically held.
- **Vehicle Ringtone**
  When this function is activated, a specific ringtone that is different from the cellular phone will sound when receiving a call.

Auto Downloaded

When this item is activated and supported by a compatible phone, the phonebook of the hands-free phone is automatically downloaded at the same time that the hands-free phone is connected.

When this item is active, the system will automatically re-download the entries registered in the connected phone even after you delete the entries from your vehicle's handset memory.

TROUBLESHOOTING GUIDE

The system should respond correctly to all voice commands without difficulty. If problems are encountered, try the following solutions. Where the solutions are listed by number, try each solution in turn, starting with number 1, until the problem is resolved.

Symptom	Solution
The system fails to interpret the command correctly.	1. Ensure that the command is valid. (See “INFINITI Voice Recognition System (models with navigation system)” (P.4-115).)
	2. Ensure that the command is spoken after the tone.
	3. Speak clearly without pausing between words and at a level appropriate to the ambient noise level in the vehicle.
	4. Ensure that the ambient noise level is not excessive (for example, windows open or defroster on). NOTE: If it is too noisy to use the phone, it is likely that the voice commands will not be recognized.
	5. If more than one command was said at a time, try saying the commands separately.
The system consistently selects the wrong voicetag.	1. Ensure that the voicetag requested matches what was originally stored. (See “Quick Dial” (P.4-93).)
	2. Replace one of the names being confused with a new name.

WARNING

- **Use a phone after stopping your vehicle in a safe location. If you have to use a phone while driving, exercise extreme caution at all times so full attention may be given to vehicle operation.**
- **If you find yourself unable to devote full attention to vehicle operation while talking on the phone, pull off the road to a safe location and stop your vehicle before doing so.**

CAUTION

To avoid draining the vehicle battery, use a phone after starting the engine.

Your vehicle is equipped with Bluetooth® Hands-Free Phone System. If you are an owner of a Bluetooth® enabled cellular phone, you can set up the wireless connection between your cellular phone and the in-vehicle phone module. With Bluetooth® wireless technology, you can make or receive a telephone call with your cellular phone in your pocket.

Once your cellular phone is paired to the in-vehicle phone module, no phone connecting procedure is required. Your phone is automatically connected with the in-vehicle phone module when the ignition switch is pushed to the "ON" position with the registered cellular phone turned on and carried in the vehicle.

You can register up to 5 different Bluetooth® cellular phones in the in-vehicle phone module. However, you can talk on only one cellular phone at a time.

When a call is active, the audio system and microphone (located in the ceiling in front of the rearview mirror) are used for the handsfree communications.

If the audio system is being used at the time, the audio mode will mute and will stay muted until the active call is ended.

The INFINITI Voice Recognition system supports the phone commands, so dialing a phone number using your voice is possible.

Before using the Bluetooth® Hands-Free Phone System, refer to the following notes.

- Wireless LAN (Wi-Fi) and the Bluetooth® functions share the same frequency band (2.4 GHz). Using the Bluetooth® and the wireless LAN functions at the same time may slow down or disconnect the communication and cause undesired noise. It is recommended that you turn off the wireless LAN (Wi-Fi) when using the Bluetooth® functions.
- Set up the wireless connection between a cellular phone and the in-vehicle phone module before using the Bluetooth® Hands-Free Phone System.
- Some Bluetooth® enabled cellular phones may not be recognized by the in-vehicle phone module. Please visit www.InfinitiUSA.com/bluetooth for a recommended phone list.
- You will not be able to use a hands-free phone under the following conditions:
  - Your vehicle is outside of the telephone service area.
  - Your vehicle is in an area where it is difficult to receive radio waves; such as in a tunnel, in an underground parking garage, behind a tall building or in a mountainous area.
  - Your cellular phone is locked in order not to be dialed.
- When the radio wave condition is not ideal or ambient sound is too loud, it may be difficult to hear the other

person's voice during a call.

- Immediately after the ignition switch is pushed to the "ON" position, it may be impossible to receive a call for a short period of time.
- Do not place the cellular phone in an area surrounded by metal or far away from the in-vehicle phone module to prevent tone quality degradation and wireless connection disruption.
- While a cellular phone is connected through the Bluetooth® wireless connection, the battery power of the cellular phone may discharge quicker than usual.
- If the Bluetooth® Hands-Free Phone System seems to be malfunctioning, please contact an INFINITI retailer.
- Some cellular phones or other devices may cause interference or a buzzing noise to come from the audio system speakers. Storing the device in a different location may reduce or eliminate the noise.
- Refer to the cellular phone Owner's Manual regarding the telephone pairing procedure specific to your phone, battery charging, cellular phone antenna, etc.
- The antenna display on the monitor will not coincide with the antenna display of some cellular phones.
- Keep the interior of the vehicle as quiet as possible to hear the caller's voice clearly as well as to minimize its echoes.
- If reception between callers is unclear, adjusting the incoming or outgoing call volume may improve the clarity.
- This wireless hands free car kit is based on Bluetooth® technology,
  - Frequency: 2402 MHz - 2480 MHz
  - Output Power: 4.14 dBm E.I.R.P
  - Modulation: FHSS GFSK 8DPSK, p/4DQPSK
  - Number of Channel: 79
  - This wireless equipment can't be used for any services related to safety because there is the possibility of radio interference.

REGULATORY INFORMATION

FCC Regulatory information

- CAUTION: To maintain compliance with FCC's RF exposure guidelines, use only the supplied antenna. Unauthorized antenna, modification, or attachments could damage the transmitter and may violate FCC regulations.
- Operation is subject to the following two conditions:

1. this device may not cause interference and
2. this device must accept any interference, including interference that may cause undesired operation of the device

IC Regulatory information

- Operation is subject to the following two conditions: (1) this device may not cause interference, and (2) this device must accept any interference, including interference that may cause undesired operation of the device.
- This Class B digital apparatus meets all requirements of the Canadian Interference-Causing Equipment Regulations.

Bluetooth® is a trademark owned by Bluetooth SIG, Inc., and licensed to Visteon Corporation.

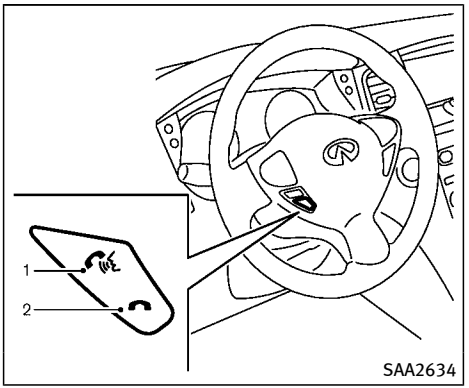

CONTROL BUTTONS

1. PHONE SEND button
   Push the button to initiate a Voice Recognition (VR) session or answer an incoming call. You can also use the button to skip through system feedback and to enter commands during a call.
2. PHONE END button
   Push the button to cancel a VR session or end a call.

VOICE RECOGNITION SYSTEM

You can also use the Bluetooth® hands-free phone system with Voice Recognition System.

INFO

- The available voice commands are only applicable to the relevant language set in the LANGUAGE setting screen. (See “How to use SETTING button” (P.4-15).)
- If the vehicle is in motion, some commands may not be available so full attention may be given to vehicle operation.

Using system

Initialization:

When the ignition switch is pushed to the ON position, Voice Recognition System is initialized, which may take up to one minute. When completed, the system is ready to accept voice commands. If the switch on the steering wheel is pushed before the initialization completes, the system will not accept any command.

Before starting:

To get the best performance out of the Voice Recognition System, observe the following:

- Keep the interior of the vehicle as quiet as possible. Close the windows to eliminate the surrounding noises (traffic noises, vibration sounds, etc.), which may prevent the system from recognizing the voice commands correctly.
- Wait until a tone sounds before speaking a command.
- Speak a voice command within 5 seconds after the beep sound. If no voice command is given, the system will ask you for a number. If no further command is given, the session ends.
- Speak in a natural voice without pausing between words.

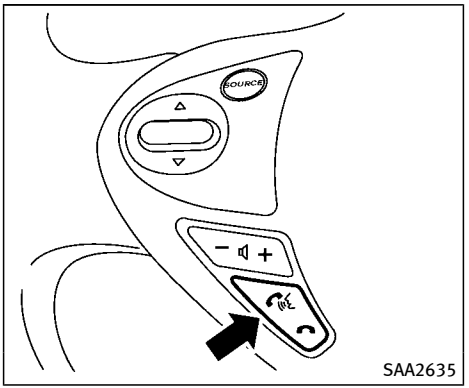

Giving voice command:

1. Push and release the switch located on the steering wheel.

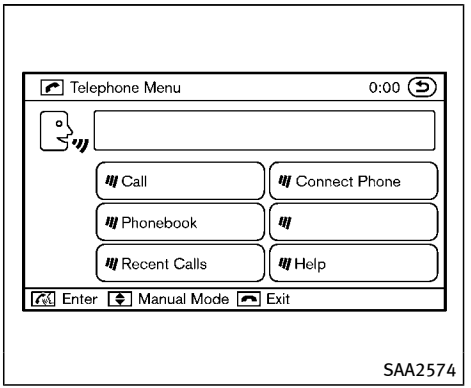

2. A list of commands appears on the screen, and the system announces, “Please say a command after the beep. Available commands are: Call, Phonebook, Recent Calls, Connect Phone or Help”.
3. After the tone sounds and the icon on the screen changes from to , speak a command. See the “List of voice commands” (P.4-106) for the voice command list. Speak “Call” for example.

   INFO

   Voice commands cannot be recognized as long as the screen icon is not in the

command recognition mode .

4. The system acknowledges the command and announces the next set of available commands.
5. After the tone sounds, speak the phone number.
6. When you have finished speaking the phone number, the system repeats it back and announces the available commands.
7. After system responds, speak “Dial” and the system dials the spoken numbers.

Operating tips:

- Voice commands cannot be accepted when the icon is .
- If the command is not recognized, the system announces, “Please say again”. Repeat the command in a clear voice.
- Push the switch or the **BACK** button once to return to the previous screen.
- If you want to cancel the command, push the switch. The message “Voice input is canceled” will be announced. If you want to adjust the volume of the system feedback, push the volume control buttons [+] or [–] on the steering wheel or use the audio system volume knob while the system is making an announcement.

How to speak commands:

The Voice Recognition System requires a certain way to speak voice commands. Speak normally and clearly in the direction of the microphone (located in front of the rearview mirror). Every digit of the number must be spoken individually and in a normal manner. The hands-free mode will work best when the telephone number is spoken in blocks of three to five digits. After each spoken block is terminated, the system will repeat the three to five digits and wait for you to speak the next digit or block of digits required for the telephone number.

See “List of voice commands” (P.4-106) for the appropriate commands that can be spoken for the hands-free mode system.

Example:

In order to initiate a call, speak “Phonebook”.

INFO

- If you are controlling the telephone system by voice command for the first time or do not know the appropriate voice command, speak “Help”. The system announces the available commands.
- When you speak numbers, you can speak both “zero” or “oh” for “0”.

Personal vocabulary (voicetags):

Voice Recognition System is equipped with the function called “voicetags”, which can be associated with the phone number and name in the phonebook. Using the voice tag will automatically generate a speed dial to the registered number.

See “Phonebook registration” (P.4-108).

You can call the identified number using the following command: “Dial” followed by the voice tag.

Dialling a name with a voice tag:

It is possible to call up a name via a voice tag instead of a number, provided the name and number of your correspondent have been previously stored in the phonebook.

Dial via a voice tag, according to the following procedure.

1. Push the switch.
2. The system replies “please say a command after the beep. Available commands are: Call, Phonebook, Re-

cent Calls, Connect Phone or Help".

3. Give your instructions to the system by saying: "Dial John" for example ("John" must have been previously set as a voice tag for John's phone number) or "Dial One" if John is classified as one in the phonebook.

   If the system cannot understand your command, repeat it according to the recommendations mentioned in "How to speak commands" (P.4-104).

4. If the given name (voice tag) is correct, the phone system will dial the number registered for "John".

INFO

To end the voice command phase at any stage of the procedure, push the switch once in order to activate the cancel command.

Manual command selection:

Commands can be selected manually. While the commands are displayed on the screen, select a command by operating the Tune switch, and then push the button. Once a command is manually selected, the voice command function is cancelled. To return to voice command mode, push the button to cancel the current operation, and then perform the first procedure of voice command.

List of voice commands:

COMMAND	ACTION
“Call/Dial” “‹name›”	Dials the specified ‹name›.
“Call/Dial” “Redial”	Dials the last number.
“Call” “‹number›”	Dials the specified ‹number›.
“Phonebook” “Number” “‹name›”	Displays the specified ‹name› in the phonebook.
“Phonebook” “List Names”	Displays all the names in the phonebook.
“Phonebook” “Transfer Entry”	Transfers the phonebook data to the system.
“Phonebook” “Delete Entry”	Deletes the phonebook registered in the system.
“Connect Phone” “Add Phone”	Connects a cellular phone to the system.
“Connect Phone” “Select Phone”	Selects a registered cellular phone.
“Connect Phone” “Delete Phone”	Deletes a registered cellular phone.
“Connect Phone” “Bluetooth Off”	Turns the Bluetooth connection off.
“Connect Phone” “Replace Phone”	Changes the registered order of the cellular phones.
“Connect Phone” “Delete Phone” “All Phones”	Deletes all registered cellular phones.
“Connect Phone” “Delete Phone” “List Phones”	Selects a registered cellular phone and deletes it.

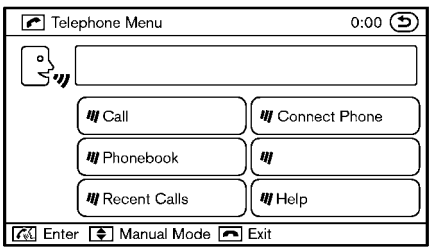

SAA2575

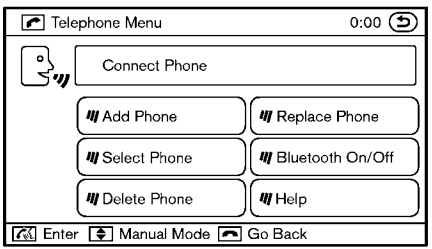

SAA2576

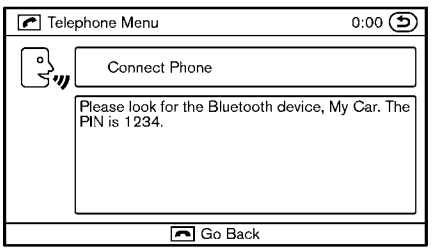

SAA2577

PAIRING PROCEDURE

Up to 5 cellular phones can be registered.

1. Push the button on the steering wheel. The system announces the available commands.
2. Speak: “Connect Phone”. The system acknowledges the command and announces the next set of available commands.
3. Speak: “Add Phone”. The system acknowledges the command and asks you to initiate connecting from the phone handset.

   INFO:

   The Add Phone command is not available when the vehicle is moving.
4. When asked to enter a PIN code to connect a Bluetooth® cellular phone, enter the code “1234”.

   The code is always “1234” regardless of the number of phones paired.

   The connecting procedure of the cellular phone varies according to each cellular phone. See the cellular phone Owner’s Manual for the details. You can also visit www.InfinitiUSA.com/bluetooth or call INFINITI Consumer Affairs Department for instructions on pairing INFINITI recommended cellular phones.

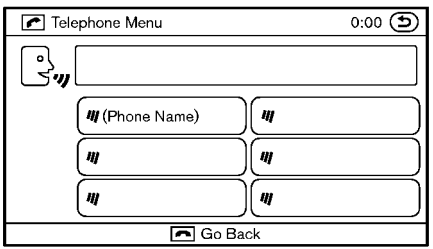

SAA2578

5. The system asks the user to speak a name for the phone.

   Speak: “Yes”. The system acknowledges the command and registers the cellular phone.

If the name is too long or too short, the system tells the user, then prompts the user for a name again.

Also, if more than one phone is connected and the name sounds too much like a name already used, the system tells the user, then prompts the user for name again.

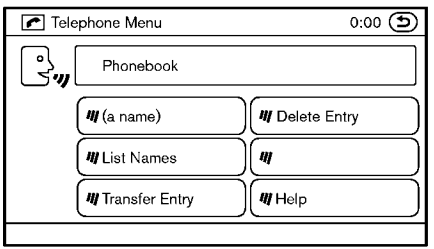

SAA2579

PHONEBOOK REGISTRATION

When the cellular phone is connected to the in-vehicle module, the data stored in the cellular phone such as phonebook, outgoing call logs, incoming call logs and missed call logs is automatically transferred and registered to the system.

The availability of this function depends on each cellular phone. The copying procedure also varies according to each cellular phone. See cellular phone Owner’s Manual for more information.

Up to 1,000 phone numbers per registered cellular phone can be stored in the phonebook.

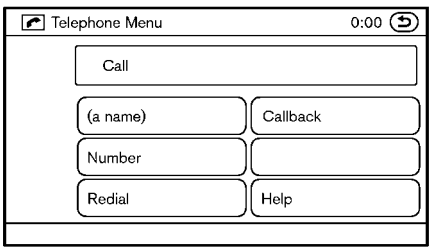

SAA2580

MAKING A CALL

To make a call, follow the procedures below.

1. Push the button on the steering wheel. A tone will sound.
2. Speak: “Call”. The system acknowledges the command and announces the next set of available commands.
3. Speak the registered person’s name. The system acknowledges the command and announces the next set of available commands.
4. Speak: “Yes”. The system acknowledges the command and makes the call.
5. Once the call has ended, press the button on the steering wheel.

RECEIVING A CALL

When the ring tone is heard, press the button on the steering wheel.

Once the call has ended, press the button on the steering wheel.

NOTE:

To reject a call when the ring tone is heard, press the button on the steering wheel.

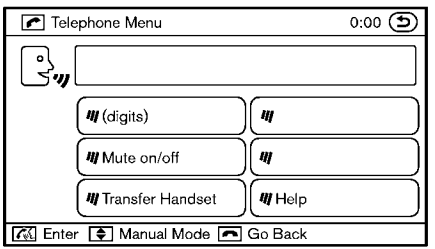

SAA2581

DURING A CALL

During a call there are several command options available. Press the button on the steering wheel to mute the receiving voice and enter commands.

- “(digits)” — Use the Send command to enter numbers during a call. For example, if directed to dial an extension by an automated system:

  Speak: “Sending one two three four.”

  The system acknowledges the command and sends the tones associated with the numbers. The system then ends the VR session and returns to the

call.

- “Mute on/off” — Use the Mute command to mute the user’s voice so the other party cannot hear it.

  Use the mute command again to unmute the user’s voice.
- “Transfer Handset” — Use the Transfer Handset command to transfer the call from the Bluetooth® Hands-Free Phone System to a cellular phone when privacy is desired. The system announces, “Transfer Handset. The call is transferred to the handset only.” The system then ends the VR session.

  The Transfer Call command can also be issued again to return to a hands-free call through the vehicle.
- “Help” — The system announces the available commands.

NOTE:

If the other party ends the call or the cellular phone network connection is lost while the Mute feature is on, the Mute feature may need to be reset to “off.”

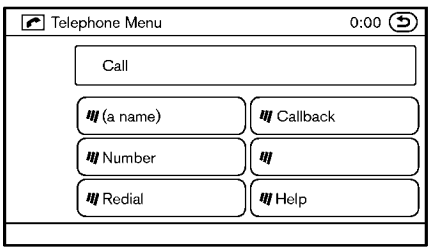

SAA2582

PHONE OPERATION

Call

- **(a name)**

  If there are entries stored in the Phone Book, a number associated with a name and location can be dialed. See “Phonebook registration” (P.4-108) to learn how to store entries. When prompted by the system, say the name of the phone book entry to call.

  The system acknowledges the name. If there are multiple locations associated with the name, the system asks the user to choose the location.

  Once the name and location are confirmed, the system begins the call.
- **Number**

  When prompted by the system, speak the number to call.
- **Redial**

  Use the Redial command to call the last number of outgoing calls. The system acknowledges the command, repeats the number and begins dialing. If a redial number does not exist, the system announces, “There is no number to redial” and ends the VR session.
- **Callback**

  Use the Callback command to call the last number in incoming calls. The system acknowledges the command, repeats the number and begins dialing. If an incoming call number does not exist, the system announces, “There is no number to call back” and ends the VR session.
- **Help**

  The system announces the available commands.

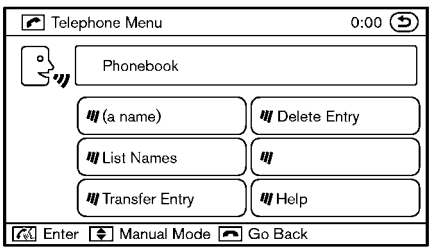

SAA2583

Phonebook

- **(a name)**

  Use the name command to seek the name and locations registered in the phonebook in alphabetical order. When the system acknowledges the alphabet the user spoke, the system announces all registered names and locations beginning with that alphabet.

  Playback of the list can be stopped at any time by pressing a button on the steering wheel. The system ends the VR session.

- **List Names**

  Use the List Names command to hear the names and locations registered in the phonebook. When the system acknowledges the command, the system announces all voicetags registered in the system.

  Playback of the list can be stopped at any time by pressing a button on the steering wheel. The system ends the VR session.

- **Transfer Entry**

  Use the Transfer Entry command to transfer the phonebook data stored in a cellular phone to the system.

  The system acknowledges the command and asks the user to initiate a transfer from the phone handset. The new contact phone number will be transferred from the cellular phone via a Bluetooth® communication link.

  The transfer procedure varies according to each cellular phone. See the cellular phone Owner's Manual for more information. The system repeats the number and prompts the user for the next command. After entering numbers, choose "Store."

  The system confirms the name, location and number. The system then asks if the user would like to store another location for the same name. If the user does not wish to store another location, the system ends the VR session.

- **Delete Entry**

  Use the Delete Entry command to delete a specific number or all numbers in the phonebook. The system announces the names of the phone numbers already stored in the system. The system then gives the option to delete a specific number or all numbers. Once the user chooses to delete a number or all numbers, the system asks the user to confirm.

- **Help**

  The system announces the available commands.

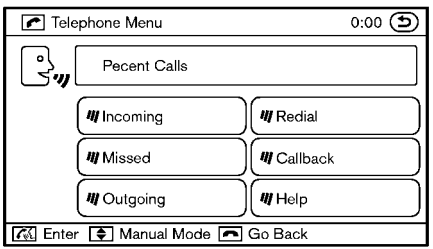

SAA2584

Recent Calls

- **Incoming**
  Use the Incoming command to make a call viewing the list of incoming calls.
- **Missed**
  Use the Missed command to make a call viewing the list of missed calls.
- **Outgoing**
  Use the Outgoing command to make a call viewing the list of outgoing calls.
- **Redial**
  Use the Redial command to dial the last outgoing call.
- **Callback**
  Use the Callback command to dial the last incoming call.
- **Help**
  The system announces the available commands.

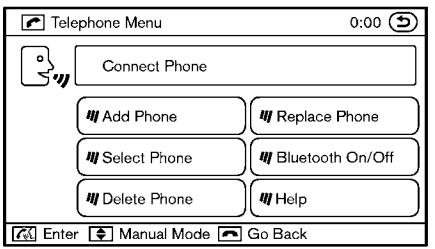

SAA2585

Connect Phone

- **Add Phone**
  Use the Pair Phone command to connect a compatible phone to the Bluetooth® Hands-Free Phone System.
  When asked to enter a PIN code to connect a Bluetooth® cellular phone, enter the code “1234”.
  The code is always “1234” regardless of the number of phones connected. Up to 5 phones can be connected. If the user tries to connect a sixth phone, the system announces that the user must first delete one phone or replace an

existing phone. If the user tries to connect a phone that has already been connected to the vehicle system, the system announces the name that the phone is already using. The connecting procedure will then be cancelled.

The Add Phone command is not available when the vehicle is moving.

- **Select Phone**

  Use the Select Phone command to select a phone of lesser priority when two or more phones connected with Bluetooth® Hands-Free Phone System are in the vehicle at the same time.

  The system asks the user to name the phone and confirm the selection.

  Once the selection is confirmed, the selected phone remains active until the ignition switch is placed in the OFF position or a new phone is selected.

- **Delete Phone**

  Use the Delete Phone command to delete a specific phone or all phones from Bluetooth® Hands-Free Phone System. The system announces the names of the phones already paired with the system and their priority level. The system then gives the option to delete a specific phone, all phones or listen to the list again. Once the user chooses to delete a phone or all phones, the system asks the user to confirm.

NOTE:

When the user deletes a phone, the associated phone book for that phone will also be deleted.

- **Replace Phone**

  Use the Replace Phone command to change the active phone. The system will list the names assigned to each phone and then prompt you for the phone you wish to select. Only one phone can be active at a time.

- **Bluetooth On/Off**

  Use the Bluetooth On/Off command to turn on/off Bluetooth® Hands-Free Phone System.

- **Help**

  The system announces the available commands.

SPEAKER ADAPTATION MODE

The speaker adaptation mode allows up to two users with different dialects to train the system to improve recognition accuracy. By repeating a number of commands, the users can create a voice model of their own voice that is stored in the system. The system is capable of storing a different speaker adaptation model for each connected phone.

Training procedure

1. Position the vehicle in a reasonably quiet outdoor location.
2. Sit in the driver's seat with the engine running, the parking brake on, and the transmission in Park.
3. Press the button.
4. Speak: "Help". The system acknowledges the command and announces the next set of available commands.
5. Speak: "SPEAKER Adaptation". The system acknowledges the command and displays the speaker adaptation mode screen.
6. Voice memory A or memory B is selected automatically. If both memory locations are already in use, the system

will prompt you to overwrite one. Follow the instructions provided by the system.

7. When preparation is complete and you are ready to begin, press the button.
8. The speaker adaptation mode will be explained. Follow the instructions provided by the system.
9. When training is finished, the system will tell you an adequate number of phrases have been recorded.
10. The system will ask you to say your name. Follow the instructions to register your name.
11. The system will announce that speaker adaptation has been completed and the system is ready.

The speaker adaptation mode will stop if:

- The button is pressed in speaker adaptation mode.
- The vehicle is driven during speaker adaptation mode.
- The ignition switch is placed in the OFF or LOCK position.

Training phrases

During the SA mode, the system instructs you to say the following phrases.

(The system will prompt you for each phrase.)

- phonebook transfer entry
- dial 3 0 4 2 9
- delete call back number
- Incoming
- Transfer entry
- 8 pause 9 3 2 pause 7
- delete all entries
- call 7 2 4 0 9
- phonebook delete entry
- next entry
- dial star 2 1 7 0
- yes
- no
- select
- Missed
- dial 8 5 6 9 2
- Bluetooth on
- Outgoing
- call 3 1 9 0 2
- 9 7 pause pause 3 0 8
- cancel
- call back number
- call star 2 0 9 5
- delete phone
- dial 8 3 0 5 1
- Record Name
- 4 3 pause 2 9 pause 0
- delete redial number
- phonebook list names
- call 8 0 5 4 1
- correction
- connect phone
- dial 7 4 0 1 8
- previous entry
- delete
- dial 9 7 2 6 6
- call 7 6 3 0 1
- go back
- call 5 6 2 8 0
- dial 6 6 4 3 7

INFINITI VOICE RECOGNITION SYSTEM (models with navigation system)

INFINITI Voice Recognition allows hands-free operation of the Phone, Navigation, Information and Audio systems in one of two modes, Standard Mode or Alternate Command Mode.

In Standard Mode, commands that are available are always shown on the display and announced by the system. You can complete your desired operation by simply following the prompts given by the system. (See “INFINITI Voice Recognition Standard Mode” (P.4-115) for details.)

For advanced operation, you can use the Alternate Command Mode. (See “INFINITI Voice Recognition Alternate Command Mode” (P.4-127) for details.) When this mode is active, an expanded list of commands can be spoken after pushing the TALK switch, and the voice command menu prompts are turned off. Review the expanded command list, which is available when this mode is active. Note that in this mode the recognition success rate may be affected as the number of available commands and the ways of speaking each command are increased.

To switch one mode to another, see each mode description later in this section.

To improve the recognition success rate when Alternate Command Mode is active, try using the Speaker Adaptation Function available in that mode. Otherwise, it is recommended that Alternate Command Mode be turned off and Standard Mode be used for the best recognition performance.

For the voice commands for the navigation system, refer to the Navigation System Owner’s Manual of your vehicle.

INFINITI VOICE RECOGNITION STANDARD MODE

The following section is applicable when the Standard Mode is activated.

The Standard Mode enables you to complete the desired operation by simply following the prompts that appear on the display and also are announced by the system.

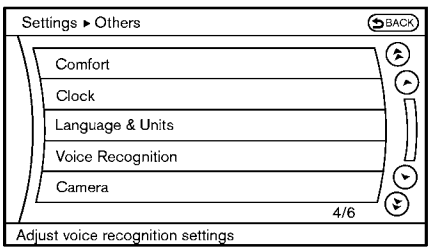

JVH0137M

Activating Standard Mode

When the Alternate Command Mode is active, perform the following steps to switch to the Standard Mode.

1. Push the **SETTING** button on the instrument panel.
2. Select the “Others” key.
3. Select the “Voice Recognition” key.

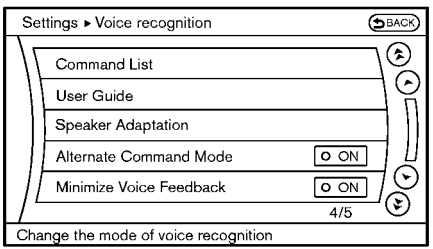

SAA2530

4. Select the “Alternate Command Mode” key.
5. The indicator turns off and the Standard Mode activates.

Displaying user guide

If you use the INFINITI Voice Recognition system for the first time or you do not know how to operate it, you can display the User Guide for confirmation.

You can confirm how to use voice commands by accessing a simplified User Guide, which contains basic instructions and tutorials for several voice commands.

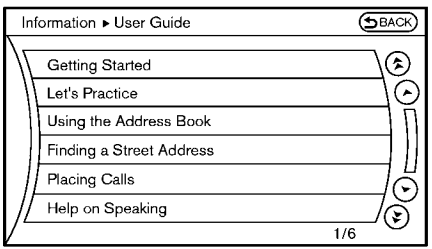

SAA2531

1. Push the INFO button on the instrument panel.
2. Select the “Others” key.
3. Select the “Voice Recognition” key.
4. Select the “User Guide” key.
5. Select a preferred item.

You can skip steps 1 and 3 above if you say “Help”.

Available items:

- Getting Started
  Describes the basics of how to operate the INFINITI Voice Recognition system.
- Let’s Practice
  Mode that allows practicing by following the instructions of the system voice.
- Using the Address Book
  Tutorial for entering a destination by using the Address Book.
- Finding a Street Address (if so equipped)
  Tutorial for entering a destination by street address.
- Placing Calls
  Tutorial for making a phone call by voice command operation.
- Help on Speaking
  Displays useful tips of speaking for correct command recognition by the system.

Note that the Command List feature is only available when Alternate Command Mode is active.

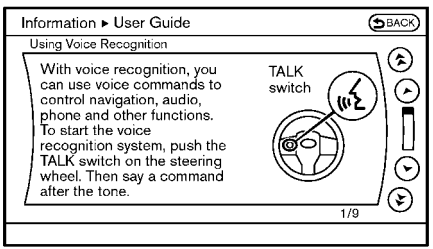

SAA2532

Getting Started

Before using the INFINITI Voice Recognition system for the first time, you can confirm how to use commands by viewing the Getting Started section of the User Guide.

1. Select the “Getting Started” key.
2. You can confirm the page by scrolling the screen using the INFINITI controller.

Tutorials on the operation of the INFINITI Voice Recognition system

If you choose “Using the Address Book”, “Finding a Street Address” or “Placing Calls”, you can view tutorials on how to perform these operations using INFINITI Voice Recognition.

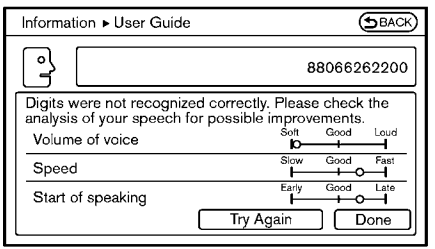

SAA2534

Let’s Practice

This mode helps learn how to use the INFINITI Voice Recognition system.

1. Select the “Let’s Practice” key.
2. After the message screen appears, push the TALK switch on the steering wheel.
3. Speak the displayed number after the tone. The evaluation screen will be displayed and the result can be confirmed.

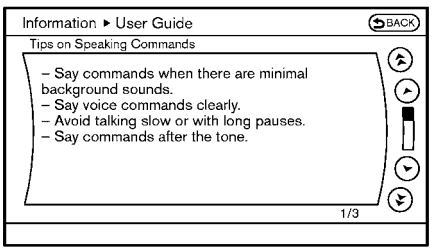

SAA2533

Useful tips for correct operation

You can display useful speaking tips to help the system recognize your voice commands correctly.

Select “Help on Speaking” to start display.

USING THE SYSTEM

Initialization

When the ignition switch is pushed to the ON position, INFINITI Voice Recognition is initialized, which may take up to one minute. When completed, the system is ready to accept voice commands. If the TALK switch is pushed before the initialization completes, the display will show the message: “System not ready.” or a beep sounds.

Before starting

To get the best recognition performance from INFINITI Voice Recognition, observe the following:

- The interior of the vehicle should be as quiet as possible. Close the windows to eliminate the surrounding noises (traffic noise and vibration sounds, etc.), which may prevent the system from correctly recognizing the voice commands.
- Wait until the tone sounds before speaking a command.
- Speak in a natural conversational voice without pausing between words.
- If the air conditioner is set to “Auto”, the fan speed is automatically lowered so that your commands can be recognized more easily.

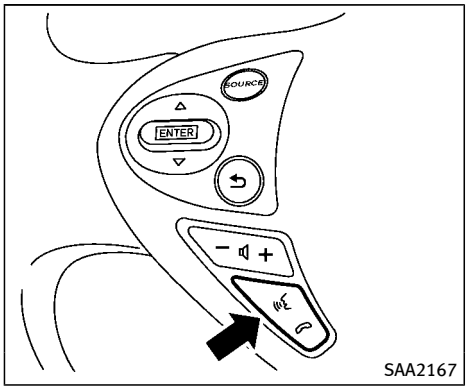

Giving voice commands

1. Push the TALK switch located on the steering wheel.
2. A list of commands appears on the screen, and you will hear a prompt.
3. After the tone sounds and the icon on the screen changes from to , speak a command.

   Selecting the "Practice" key will start the practice mode. See "Let's Practice" (P.4-117).
4. Continue to follow the voice menu prompts and speak after the tone sounds until your desired operation is completed.

   Selecting the "**Help**" key can display the detailed information of the each command.

Operating tips:

- Say a command after the tone.
- Commands that are available are always shown on the display and spoken through voice menu prompts. Commands other than those that are displayed are not accepted. Please follow the prompts given by the system.
- If the command is not recognized, the system announces, "Please say again". Repeat the command in a clear voice.
- Push the BACK button once to return to the previous screen.
- To exit the voice recognition system, push and hold the TALK switch. The message, "Voice canceled" will be announced.

Voice Prompt Interrupt:

To skip the voice guidance function and give the command immediately, press the TALK switch to interrupt the system. Remember to speak after the tone.

How to speak numbers:

INFINITI Voice Recognition requires a certain way to speak numbers when giving voice commands. Refer to the following examples.

General rule

Only single digits 0 (zero) to 9 can be used. (For example, if you would like to say 500, "five zero zero" can be used, but "five hundred" cannot.)

Examples

- 1-800-662-6200
  — "One eight zero zero six six two six two zero zero"

Improving Recognition of Phone numbers

You can improve the recognition of phone numbers by saying the phone number in three groups of numbers. For example, when you try to call 800-662-6200, say "eight zero zero" first, and the system will then ask you for the next three digits. Then, say "six six two". After recognition, the system will then ask for the last four digits. Say, "six two zero zero". Using this method of phone digit entry can improve recognition performance.

When speaking a house number, speak the number "0" as "zero". If the letter "o (oh)"

is included in the house number, it will not be recognized as the number “0 (zero)” even if you speak “oh” instead of “zero”. **Please speak “zero” for the number “0 (zero)”, “oh” for the letter “o (oh)”.**

Send digits using dial tone:

- Press the TALK switch during a phone call.
- The menu will be launched and you will be provided with the following guidance: “Please say the digits to dial”.
- After guidance, say the digits of the number you want to send. After this, the digits that have been recognized will be read out.
- If you press the ENTER button on the steering wheel or on the INFINITI controller, the selected digits will be sent.

Command List

Category Command:

Command	Action
Call(Optional)	Makes a call to a contact that is stored in either phonebook. Please say "Call" followed by a stored name.
Phone	Operates the Phone function
Navigation	Operates the Navigation function
Information	Displays the vehicle Information function
Audio	Operates the Audio function.
Help	Displays User Guide

- Phone Command:

Command		Action
Dial Number		Makes a call to a spoken phone number up to 10 digits.
Quick Dial		Makes a call to a contact that is stored in the Quick Dial.
Phonebook		Makes a call to a contact that is stored in the mobile phone.
Call history	Incoming Calls	Makes a call to the incoming call number.
	Outgoing Calls	Makes a call to the dialed number.
	Missed Calls	Makes a call to the Missed calls number.
International Call		Makes an international call by allowing more than 10 digits to be spoken.
Change Number		Corrects the recognized phone number (available during phone number entry).

- Navigation Command:

Command	Action
Destination Home	Sets a route to your home that is stored in the Address Book.
Address	Searches for a location by the street address specified, and sets a route to the location.
Places	Sets a route to a facility near the current vehicle location.

Command	Action
Address Book	Searches for stored information in the Address Book.
Previous Destinations	Sets a route to a previous destination.

- Information Command:

Command	Action
Fuel Economy	Displays fuel economy information.
Maintenance	Displays maintenance information.
Traffic Information	Turns the traffic information system ON and OFF.
Tire Pressure	Displays tire pressure information.
Where am I?	Displays your current location.

- Audio Command:

Command	Action
AM	Turns to the AM band, selecting the station last played.
FM	Turns to the FM band, selecting the station last played.
XM	Turns to the SiriusXM Satellite Radio band, selecting the channel last played.
CD	Starts to play a CD.

- General Commands

Command	Action
Go back	Corrects the last recognition result to return to the previous screen
Exit	Cancels Voice Recognition

Voice command examples

To use the INFINITI Voice Recognition function, speaking one command is sometimes sufficient, but at other times it is necessary to speak two or more commands. As examples, some additional basic operations by voice commands are described here.

For navigation system commands, see the separate Navigation System Owner's Manual.

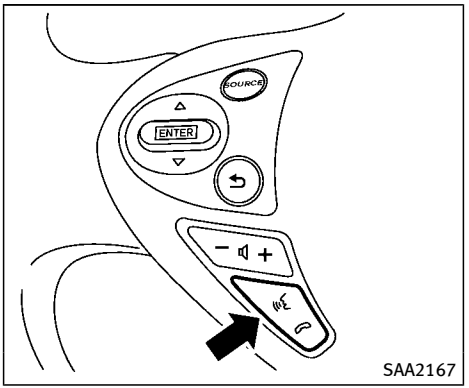

Example 1 - Placing a call to the phone number 800-662-6200:

1. Push the TALK switch located on the steering wheel. You will hear a prompt.
2. Speak "Phone".

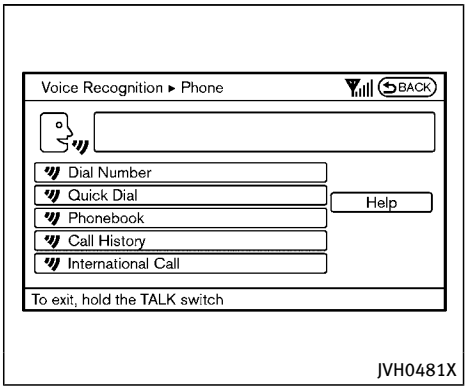

3. Speak "Dial Number".

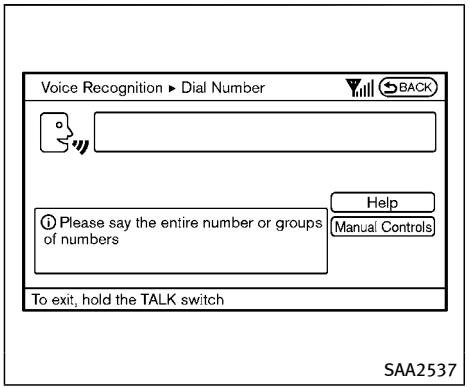

4. Speak “8 0 0”.

   Selecting the “Manual Controls” key switches the screen to the keypad to input the phone number manually.

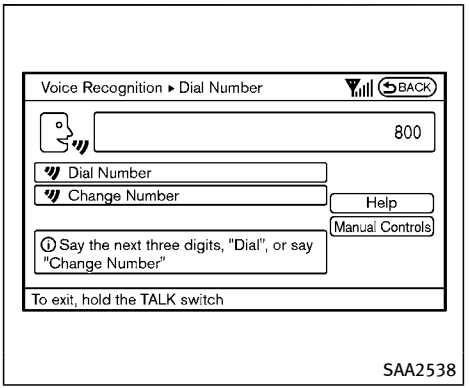

5. The system announces, “Please say the next three digits or dial, or say change number.”
6. Speak “6 6 2”.

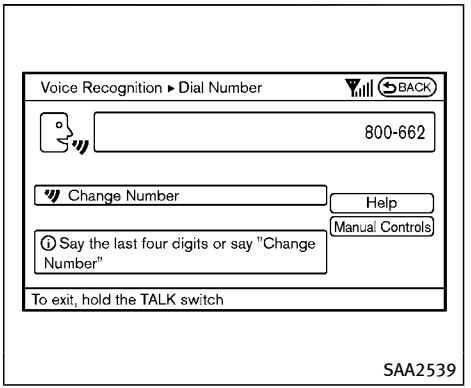

7. The system announces, “Please say the last four digits” or say change number.
8. Speak “6 2 0 0”.

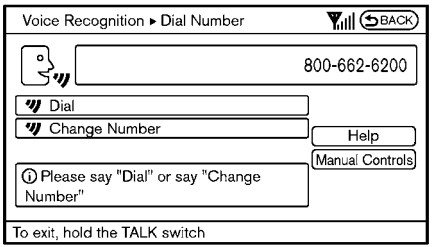

SAA2540

9. The system announces, “Dial or Change Number?”
10. Speak “Dial”.
11. The system makes a call to 800-662-6200.

NOTE:

- **You can also speak “800-662-6200” (10 continuous digits) or “662-6200” (7 continuous digits), if the area code is not necessary. However, the 3-3-4 digit grouping is recommended for improved recognition. (See “Giving voice commands” (P.4-119).)**
- **You can only say a phone number using the 3-3-4 grouping, 7 digits, and 10 digits using this command. Please use the “International Call” command for all other formats.**
- **If you say “Change Number” during phone number entry, the system will automatically request that you repeat the number using the 3-3-4 format. In this case please say the area code first and then follow the prompts.**
- **Do not add a “1” in front of the area code when speaking phone numbers.**
- **If the system does not recognize your command, please try repeating the command using a natural voice. Speaking too slow or too loudly may further decrease recognition performance.**

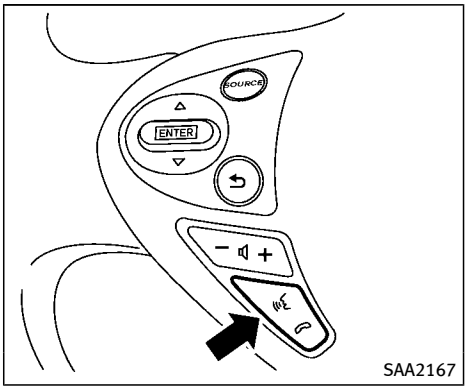

SAA2167

Example 2 - Placing an international call to the phone number 011-81-111-222-3333:

1. Push the TALK switch located on the steering wheel. You will hear a prompt.
2. Speak “Phone”.

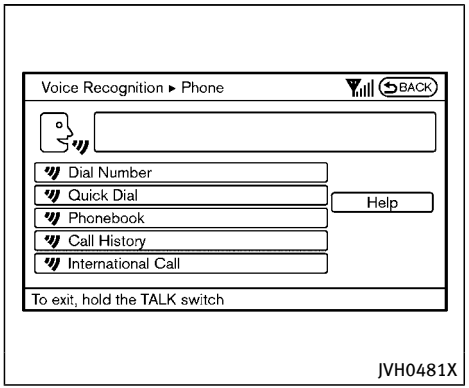

3. Speak “International Call”.

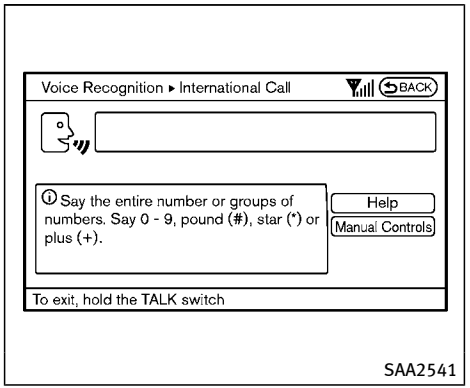

4. Speak “011811112223333”.

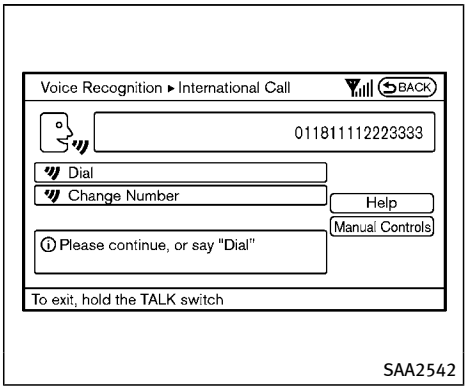

5. Speak “Dial”.
6. System makes a call to 011-81-111-222-3333.

NOTE:

Any digit input format is available in the International Number input process.

INFINITI VOICE RECOGNITION ALTERNATE COMMAND MODE

The following section is applicable when Alternate Command Mode is activated.

When Alternate Command Mode is activated, an expanded list of commands can be used after pressing the TALK switch. In this mode, available commands are not fully shown on the display or prompted. Review the expanded command list when this mode is active. See examples of Alternate Command Mode screens.

Please note that in this mode the recognition success rate may be affected as the number of available commands and ways of speaking each command are increased. To improve the recognition success rate, try using the Speaker Adaptation Function available in that mode. (See “Speaker adaptation function (for Alternate Command Mode)” (P.4-137).) Otherwise it is recommended that Alternate Command Mode be turned OFF and Standard Mode be used for the best recognition performance.

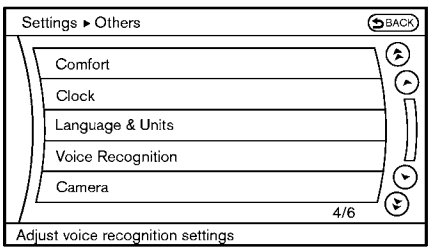

JVH0137M

Activating Alternate Command Mode

When the Standard Mode is active, perform the following steps to switch to the Alternate Command Mode.

1. Push the **SETTING** button on the instrument panel.
2. Highlight the “Others” key.
3. Highlight the “Voice Recognition” key.

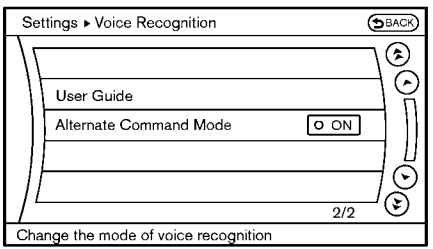

SAA2543

4. Highlight the “Alternate Command Mode” key.
5. The confirmation message is displayed on the screen. Push the “OK” key to activate the Alternate Command Mode.

Displaying command list

If you are controlling the system by voice commands for the first time or do not know the appropriate voice command, perform the following procedure for displaying the voice command list (available only in Alternate Command Mode).

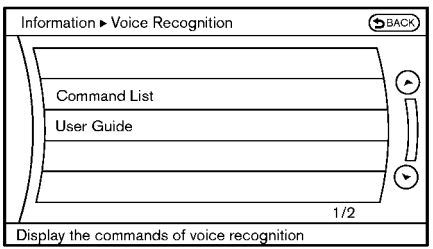

SAA2544

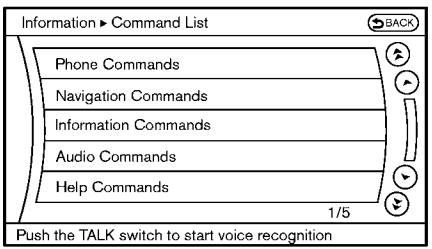

SAA2545

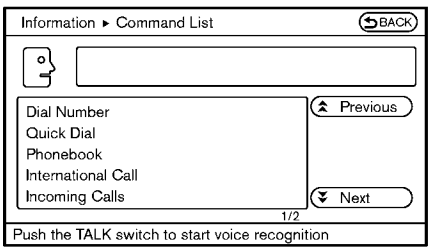

JVH0483X

1. Push the INFO button on the instrument panel.
2. Select the “Others” key.
3. Select the “Voice Recognition” key.
4. Select the “Command List” key.
5. Select a category from the list.
6. Select an item.
7. If necessary, scroll the screen using the INFINITI controller to view the entire list.
8. Press the BACK button to return to the previous screen.

Command List

Phone Commands:

Command		Action
Dial Number		Makes a call to a spoken phone number.
Quick Dial		Makes a call to a contact that is stored in the Quick Dial.
Phonebook		Makes a call to a contact that is stored in the mobile phone.
Call History	Incoming Calls	Makes a call to the incoming call number.
	Outgoing Calls	Makes a call to the dialed number.
	Missed Calls	Makes a call to the Missed calls number.
International Call		Makes an international call by allowing more than 10 digits to be spoken.
Call ‹named›		Makes a call to the contact that is stored in either the Quick Dial or Phonebook. Please say “Call” followed by a stored name.
Change Number		Corrects the recognized phone number (available during phone number entry).

Navigation Commands:

Command	Action
Destination Home	Sets a route to your home that is stored in the Address Book.
Address	Searches for a location by the street address specified, and sets a route to the location.
Places	Sets a route to a facility near the current vehicle location.
Address Book	Searches for stored information in the Address Book.
Previous Destinations	Sets a route to a previous destination.
Previous Start Point	Sets a route to a previous starting point.
Delete Destination	Deletes a destination.

Information Commands:

Command	Action
Fuel Economy	Displays fuel economy information.
Maintenance	Displays maintenance information.
Where am I?	Displays your current location.
Traffic Information	Turns the traffic information system ON and OFF.
Tire Pressure	Displays tire pressure information.
Weather Information	Displays weather information.
Weather Map	Displays a weather map.

Audio Commands:

Command	Action
CD	Starts to play a CD.
FM	Turns to the FM band, selecting the station last played.
AM	Turns to the AM band, selecting the station last played.
XM	Turns to the SiriusXM Satellite Radio band, selecting the channel last played.
USB	Turns on the USB memory.
Bluetooth Audio	Turns on the Bluetooth® audio player.

Help Commands:

Command		Action
Command List	Navigation Commands	Displays the navigation command list.
	Phone Commands	Displays the phone command list.
	Audio Commands	Displays the audio command list.
	Information Commands	Displays the information command list.
	Help Commands	Displays the help command list.
User Guide		Displays the User Guide.
Speaker Adaptation		The system can memorize the voices of up to three persons.

General Commands:

Command	Action
Go back	Corrects the last recognition result to return to the previous screen
Exit	Cancels Voice Recognition

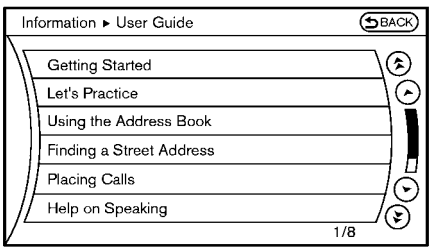

SAA2547

Displaying user guide

You can confirm how to use voice commands by accessing a simplified User Guide, which contains basic instructions and tutorials for several voice commands.

1. Push the INFO button on the instrument panel.
2. Select the “Others” key using the INFINITI controller and push the ENTER button.
3. Highlight the “Voice Recognition” key using the INFINITI controller and push the ENTER button.
4. Highlight the “User Guide” key using the INFINITI controller and push the ENTER button.
5. Highlight an item using the INFINITI controller and push the ENTER button.

Available items:

- Getting Started
  Describe the basics of how to operate the INFINITI Voice Recognition system.
- Let’s Practice
  Mode that allows practicing by following the instructions of the system voice.
- Using the Address Book
  Refer to Navigation System Owner’s Manual.
- Finding a Street Address (if so equipped)
  Refer to Navigation System Owner’s Manual.
- Placing Calls
  Tutorial for making a phone call by voice command operation.
- Help on Speaking
  Displays useful tips for how to correctly speak commands in order for them to be properly recognized by the system.
- Voice Recognition Settings
  Describes the available voice recognition settings.
- Adapting the System to Your Voice
  Tutorial adapting the system to your voice.

USING THE SYSTEM

Initialization

When the ignition switch is pushed to the ON position, INFINITI Voice Recognition is initialized, which may take up to one minute. When completed, the system is ready to accept voice commands. If the TALK switch is pushed before the initialization completes the display will show the message: “System not ready.” or a beep sounds.

Before starting

To get the best performance from INFINITI Voice Recognition, observe the following.

- Keep the interior of the vehicle as quiet as possible. Close the windows to eliminate the surrounding noises (traffic noises, vibration sounds, etc.), which may prevent the system from recognizing the voice commands correctly.

- When the air conditioner is in the AUTO mode, the fan speed decreases automatically for easy recognition.
- Wait until a tone sounds before speaking a command.
- Speak in a natural voice without pausing between words.

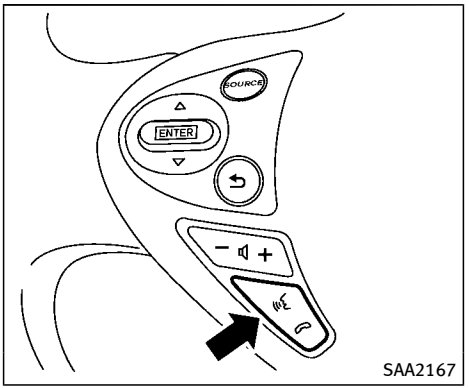

Giving voice command

1. Push and release the TALK switch located on the steering wheel.
2. A list of commands appears on the screen, and the system announces, “Please say a command”.
3. After the tone sounds and the icon on the screen changes from to , speak a command.

Operating tips:

- Voice commands cannot be accepted when the icon is .
- The list displayed can be scrolled by tilting the menu control switch on the steering wheel.
- If the command is not recognized, the system announces, “Please say again”. Repeat the command in a clear voice.
- Push the BACK button once to return to the previous screen.
- If you want to cancel the command, push and hold the TALK switch for 1 second. The message “Voice canceled” will be announced.

Voice Prompt Interrupt:

To skip the voice guidance function and give the command immediately, press the TALK switch to interrupt the system. Remember to speak after the tone.

How to speak numbers:

INFINITI Voice Recognition requires a certain way to speak numbers when giving voice commands. Refer to the following examples.

General rule

Only single digits 0 (zero) to 9 can be used. (For example, if you would like to say 500, “five zero zero” can be used, but “five hundred” cannot.

Phone numbers

Speak phone numbers according to the following examples:

- 1-800-662-6200
  — “Dial one eight zero zero six six two six two zero zero.”

Note 1: For the best voice recognition phone dialing results, say phone numbers as single digits.

Note 2: You cannot say 555-6000 as “five five five six thousands”.

Note 3: When speaking a house number, speak the number “0” as “zero”. If the letter “o (oh)” is included in the house number, it will not be recognized as the number “0 (zero)” even if you speak “oh” instead of “zero”. Please speak “zero” for the number “0 (zero)”, “oh” for the letter “o (oh)”.

Send digits using dial tone:

- Press the TALK switch during a phone call.
- The menu will be launched and you will be provided with the following guidance: “Please say the digits to dial”.
- After guidance, say the digits of the number you want to send. After this, the digits that have been recognized will be read out.
- If you press the ENTER button on the steering wheel or on the INFINITI controller, the selected digits will be sent.

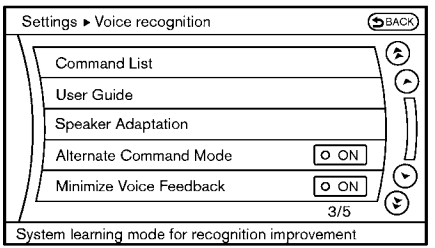

SAA2549

Speaker adaptation function (for Alternate Command Mode)

The voice recognition system has a function to learn the user’s voice for better voice recognition performance. The system can memorize the voices of up to three persons.

Having the system learn the user’s voice:

1. Push the **SETTING** button on the instrument panel and select the “Others” key.
2. Select the “Voice Recognition” key.
3. Select the “Speaker Adaptation” key.

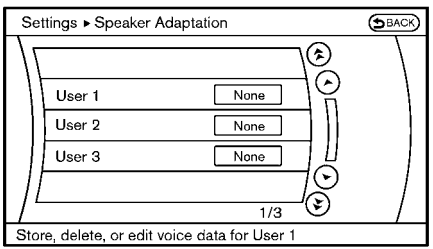

SAA2550

4. Select the user whose voice is memorized by the system.
5. Select the “Start Speaker Adaptation Learning” key.

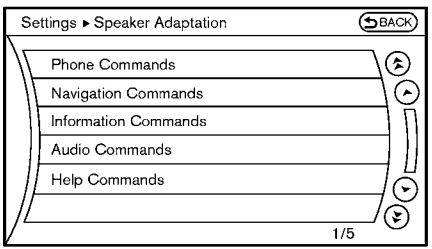

SAA2551

6. Select a category to be learned by the system from the following list.
   - Phone Commands
   - Navigation Commands
   - Information Commands
   - Audio Commands
   - Help Commands

   The voice commands in the category are displayed.
7. Select a voice command and then push the ENTER button.

   The voice recognition system starts.

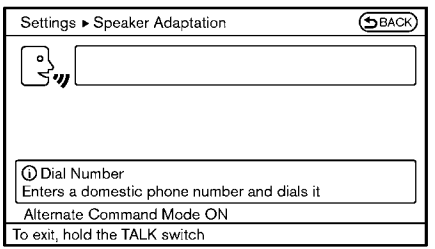

SAA2552

8. The system requests that you repeat a command after a tone.
9. After the tone sounds and the icon on the screen changes from to , speak the command that the system requested.
10. When the system has recognized the voice command, the voice of the user is learned.

Push the switch or BACK button to return to the previous screen.

If the system has learned the command correctly, the voice command status on the right side of the command turns from

“None” to “Stored”.

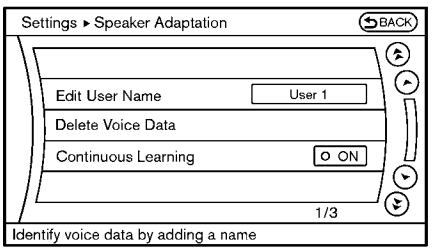

SAA2553

Speaker Adaptation function settings:

Edit User Name

Edit the user name using the keypad displayed on the screen.

Delete Voice Data

Resets the user’s voice that the voice recognition system has learned.

Continuous Learning

When this item is turned to ON, you can have the system learn the voice commands in succession, without selecting commands one by one.

Minimize voice feedback (for Alternate Command Mode)

To minimize the voice feedback from the system, perform the following steps.

1. Push the **SETTING** button on the instrument panel.
2. Select the “Others” key.
3. Select the “Voice Recognition” key.
4. Select the “Minimize Voice Feedback” key.
5. The setting is turned to ON and the voice guidance will now be reduced when using the Voice Recognition system.

TROUBLESHOOTING GUIDE

The system should respond correctly to all voice commands without difficulty. If problems are encountered, follow the solutions given in this guide for the appropriate error.

Where the solutions are listed by number, try each solution in turn, starting with number one, until the problem is resolved.

Symptom/error message	Solution
The system fails to interpret the command correctly.	1. Ensure that the command format is valid, see “Command List” (P.4-121).
	2. Speak clearly without pausing between words and at a level appropriate to the ambient noise level.
	3. Ensure that the ambient noise level is not excessive, for example, windows open or defrost on. NOTE: If it is too noisy to use the phone, it is likely that voice commands will not be recognized.
	4. If optional words of the command have been omitted, then the command should be tried with these in place.
The system consistently selects the wrong voicetag in the phonebook.	1. Ensure that the voicetag requested matches what was originally stored. (See “Bluetooth® Hands-Free Phone System (models with navigation system)” (P.4-90).)
	2. Replace one of the voicetags being confused with a different voicetag.

MEMO

MEMO

5 Starting and driving

Precautions when starting and driving 5-3
Exhaust gas (carbon monoxide) 5-3
Three-way catalyst 5-3
Tire Pressure Monitoring System (TPMS) 5-4
Avoiding collision and rollover 5-6
On-pavement and off-road driving precautions 5-7
Off-road recovery 5-7
Rapid air pressure loss 5-8
Drinking alcohol/drugs and driving 5-8
Driving safety precautions 5-9
Push-button ignition switch 5-11
Operating range for engine start function 5-11
Push-button ignition switch operation 5-12
Push-button ignition switch positions 5-12
Emergency engine shut off 5-13
Intelligent Key battery discharge 5-13
Before starting the engine 5-14
Starting the engine 5-14
Driving the vehicle 5-15
Automatic transmission 5-15
Parking brake 5-20
Lane Departure Warning (LDW) system/Lane Departure Prevention (LDP) system (if so equipped) 5-21
Lane Departure Warning (LDW) system 5-22
Lane Departure Prevention (LDP) system 5-25
Lane camera unit maintenance 5-30
Cruise control (if so equipped) 5-30
Precautions on cruise control 5-30
Cruise control operations 5-31
Intelligent Cruise Control (ICC) system (FULL SPEED RANGE) (if so equipped) 5-32
Selecting the vehicle-to-vehicle distance control mode 5-34
Vehicle-to-vehicle distance control mode 5-34
Precautions on vehicle-to-vehicle distance control mode 5-34
Vehicle-to-vehicle distance control mode operation 5-36
Conventional (fixed speed) cruise control mode 5-51
Preview function (for Intelligent Cruise Control system equipped models) 5-54

Distance Control Assist (DCA) system (if so equipped) 5-55
Precautions on Distance Control Assist system 5-55
Distance Control Assist operation 5-57
Forward Collision Warning (FCW) system (if so equipped) 5-67
Precautions on FCW system 5-68
Intelligent Brake Assist (IBA) system (if so equipped) 5-70
Precautions on IBA system 5-71
Break-in schedule 5-74
Fuel Efficient Driving Tips 5-74
Increasing fuel economy 5-76
All-Wheel Drive (AWD) (if so equipped) 5-76
Parking/parking on hills 5-78
Power steering 5-79
Brake system 5-79
Braking precautions 5-79
Parking brake break-in 5-79
Brake assist 5-80
Brake assist 5-80
Preview function (Intelligent Cruise Control system equipped models) 5-80
Anti-lock Braking System (ABS) 5-82
Vehicle Dynamic Control (VDC) system 5-84
Cold weather driving 5-85
Freeing a frozen door lock 5-85
Antifreeze 5-85
Battery 5-85
Draining of coolant water 5-85
Tire equipment 5-86
Special winter equipment 5-86
Driving on snow or ice 5-86
Engine block heater (if so equipped) 5-86

WARNING

- **Do not leave children or adults who would normally require the support of others alone in your vehicle. Pets should not be left alone either. They could accidentally injure themselves or others through inadvertent operation of the vehicle. Also, on hot, sunny days, temperatures in a closed vehicle could quickly become high enough to cause severe or possibly fatal injuries to people or animals.**
- **Properly secure all cargo to help prevent it from sliding or shifting. Do not place cargo higher than the seatbacks. In a sudden stop or collision, unsecured cargo could cause personal injury.**

EXHAUST GAS (carbon monoxide)

WARNING

- **Do not breathe exhaust gases; they contain colorless and odorless carbon monoxide. Carbon monoxide is dangerous. It can cause unconsciousness or death.**
- **If you suspect that exhaust fumes are entering the vehicle, drive with all windows fully open, and have the vehicle inspected immediately.**
- **Do not run the engine in closed spaces such as a garage.**
- **Do not park the vehicle with the engine running for any extended length of time.**
- **Keep the lift gate closed while driving, otherwise exhaust gases could be drawn into the passenger compartment. If you must drive with the lift gate open, follow these precautions:**
  1) **Open all the windows.**
  2) **Set the air recirculation to off and the fan control to high to circulate the air.**
- **If electrical wiring or other cable connections must pass to a trailer through the seal on the lift gate or the body, follow the manufacturer's recommendation to prevent carbon monoxide entry into the vehicle.**
- **The exhaust system and body should be inspected by a qualified mechanic whenever:**
  - **The vehicle is raised for service.**
  - **You suspect that exhaust fumes are entering into the passenger compartment.**
  - **You notice a change in the sound of the exhaust system.**
  - **You have had an accident involving damage to the exhaust system, underbody, or rear of the vehicle.**

THREE-WAY CATALYST

The three-way catalyst is an emission control device installed in the exhaust system. Exhaust gases in the three-way catalyst are burned at high temperatures to help reduce pollutants.

WARNING

- **The exhaust gas and the exhaust system are very hot. Keep people, animals or flammable materials away from the exhaust system components.**
- **Do not stop or park the vehicle over flammable materials such as dry grass, waste paper or rags. They may ignite and**

cause a fire.

CAUTION

- **Do not use leaded gasoline. Deposits from leaded gasoline seriously reduce the three-way catalyst's ability to help reduce exhaust pollutants.**
- **Keep your engine tuned up. Malfunctions in the ignition, fuel injection, or electrical systems can cause overrich fuel flow into the three-way catalyst, causing it to overheat. Do not keep driving if the engine misfires, or if noticeable loss of performance or other unusual operating conditions are detected. Have the vehicle inspected promptly by an INFINITI retailer.**
- **Avoid driving with an extremely low fuel level. Running out of fuel could cause the engine to misfire, damaging the three-way catalyst.**
- **Do not race the engine while warming it up.**
- **Do not push or tow your vehicle to start the engine.**

TIRE PRESSURE MONITORING SYSTEM (TPMS)

Each tire, including the spare (if provided), should be checked monthly when cold and inflated to the inflation pressure recommended by the vehicle manufacturer on the vehicle placard or tire inflation pressure label. (If your vehicle has tires of a different size than the size indicated on the vehicle placard or tire inflation pressure label, you should determine the proper tire inflation pressure for those tires.)

As an added safety feature, your vehicle has been equipped with a Tire Pressure Monitoring System (TPMS) that illuminates a low tire pressure telltale when one or more of your tires is significantly under-inflated. Accordingly, when the low tire pressure telltale illuminates, you should stop and check your tires as soon as possible, and inflate them to the proper pressure. Driving on a significantly under-inflated tire causes the tire to overheat and can lead to tire failure. Under-inflation also reduces fuel efficiency and tire tread life, and may affect the vehicle's handling and stopping ability.

Please note that the TPMS is not a substitute for proper tire maintenance, and it is the driver's responsibility to maintain correct tire pressure, even if under-inflation has not reached the level to trigger illumination of the TPMS low tire pressure telltale.

Your vehicle has also been equipped with a TPMS malfunction indicator to indicate when the system is not operating properly. The TPMS malfunction indicator is combined with the low tire pressure telltale. When the system detects a malfunction, the telltale will flash for approximately one minute and then remain continuously illuminated. This sequence will continue upon subsequent vehicle start-ups as long as the malfunction exists. When the malfunction indicator is illuminated, the system may not be able to detect or signal low tire pressure as intended. TPMS malfunctions may occur for a variety of reasons, including the installation of replacement or alternate tires or wheels on the vehicle that prevent the TPMS from functioning properly. Always check the TPMS malfunction telltale after replacing one or more tires or wheels on your vehicle to ensure that the replacement or alternate tires and wheels allow the TPMS to continue to function properly.

Additional information

- The TPMS does not monitor the tire pressure of the spare tire.
- The TPMS will activate only when the vehicle is driven at speeds above 16 MPH (25 km/h). Also, this system may not detect a sudden drop in tire pressure (for example a flat tire while driving).
- The low tire pressure warning light does not automatically turn off when the tire pressure is adjusted. After the tire is inflated to the recommended pressure, the vehicle must be driven at speeds above 16 MPH (25 km/h) to activate the TPMS and turn off the low tire pressure warning light. Use a tire pressure gauge to check the tire pressure.
- The CHECK TIRE PRESSURE warning also appears on the vehicle information display when the low tire pressure warning light is illuminated and low tire pressure is detected. The CHECK TIRE PRESSURE warning turns off when the low tire pressure warning light turns off.

  The CHECK TIRE PRESSURE warning appears each time the ignition switch is placed in the ON position as long as the low tire pressure warning light remains illuminated.

  The CHECK TIRE PRESSURE warning does not appear if the low tire pressure warning light illuminates to indicate a TPMS malfunction.
- Tire pressure rises and falls depending on the heat caused by the vehicle's operation and the outside temperature. Low outside temperature can lower the temperature of the air inside the tire which can cause a lower tire inflation pressure. This may cause the low tire pressure warning light to illuminate. If the warning light illuminates in low ambient temperature, check the tire pressure for all four tires.
- You can also check the pressure of all tires (except the spare tire) on the display screen. The order of the tire pressure figures displayed on the screen does not correspond with the actual order of the tire position. See "Tire Pressure information" (P.4-11).

For additional information, see "Low tire pressure warning light" (P.2-16) and "Tire Pressure Monitoring System (TPMS)" (P.6-3).

WARNING

- **If the low tire pressure warning light illuminates or LOW PRESSURE information is displayed on the monitor screen while driving, avoid sudden steering maneuvers or abrupt braking, reduce vehicle speed, pull off the road to a safe location and stop the vehicle as soon as possible. Driving with under-inflated tires may permanently damage the tires and increase the likelihood of tire failure. Serious vehicle damage could occur and may lead to an accident and could result in serious personal injury. Check the tire pressure for all four tires. Adjust the tire pressure to the recommended COLD tire pressure shown on the Tire and Loading Information label to turn the low tire pressure warning light OFF. If the light still illuminates while driving after adjusting the tire pressure, a tire may be flat. If you have a flat tire, replace it with a spare tire as soon as possible. (See "Flat tire" (P.6-3) for changing a flat tire.)**
- **When a spare tire is mounted or a wheel is replaced, the TPMS will not function and the low tire pressure warning light**

will flash for approximately 1 minute. The light will remain on after 1 minute. Contact your INFINITI retailer as soon as possible for tire replacement and/or system resetting.

- **Replacing tires with those not originally specified by INFINITI could affect the proper operation of the TPMS.**
- **Do not inject any tire liquid or aerosol tire sealant into the tires, as this may cause a malfunction of the tire pressure sensors.**

CAUTION

- **The TPMS may not function properly when the wheels are equipped with tire chains or the wheels are buried in snow.**
- **Do not place metalized film or any metal parts (antenna, etc.) on the windows. This may cause poor reception of the signals from the tire pressure sensors, and the TPMS will not function properly.**

Some devices and transmitters may temporarily interfere with the operation of the TPMS and cause the low tire pressure warning light to illuminate. Some examples are:

- Facilities or electric devices using similar radio frequencies are near the vehicle.
- If a transmitter set to similar frequencies is being used in or near the vehicle.
- If a computer (or similar equipment) or a DC/AC converter is being used in or near the vehicle.

FCC Notice:

For USA:

This device complies with Part 15 of the FCC Rules. Operation is subject to the following two conditions: (1) This device may not cause harmful interference, and (2) this device must accept any interference received, including interference that may cause undesired operation.

Note: Changes or modifications not expressly approved by the party responsible for compliance could void the user's authority to operate the equipment.

For Canada:

This device complies with Industry Canada licence-exempt RSS standard(s). Operation is subject to the following two conditions: (1) this device may not cause interference, and (2) this device must accept any interference, including interference that may cause undesired operation of the device.

AVOIDING COLLISION AND ROLLOVER

WARNING

Failure to operate this vehicle in a safe and prudent manner may result in loss of control or an accident.

Be alert and drive defensively at all times. Obey all traffic regulations. Avoid excessive speed, high speed cornering, or sudden steering maneuvers, because these driving practices could cause you to lose control of your vehicle. **As with any vehicle, a loss of control could result in a collision with other vehicles or objects, or cause the vehicle to rollover, particularly if the loss of control causes the vehicle to slide sideways.** Be attentive at all times,

and avoid driving when tired. Never drive when under the influence of alcohol or drugs (including prescription or over-the-counter drugs which may cause drowsiness). Always wear your seat belt as outlined in the "Seat belts" (P.1-12) of this manual, and also instruct your passengers to do so.

Seat belts help reduce the risk of injury in collisions and rollovers. **In a rollover crash, an unbelted or improperly belted person is significantly more likely to be injured or killed than a person properly wearing a seat belt.**

ON-PAVEMENT AND OFF-ROAD DRIVING PRECAUTIONS

Utility vehicles have a significantly higher rollover rate than other types of vehicles.

They have higher ground clearance than passenger cars to make them capable of performing in a variety of on-pavement and off-road applications. This gives them a higher center of gravity than ordinary cars. An advantage of higher ground clearance is a better view of the road, allowing you to anticipate problems. However, they are not designed for cornering at the same speeds as conventional passenger cars any more than low-slung sports cars are designed to perform satisfactorily under off-road conditions. If at all possible, avoid sharp turns or abrupt maneuvers, particularly at high speeds. As with other vehicles of this type, failure to operate this vehicle correctly may result in loss of control or vehicle rollover. Seat belts help reduce the risk of injury in collisions and rollovers. In a rollover crash, an unbelted or improperly belted person is significantly more likely to be injured or killed than a person properly wearing a seat belt.

Be sure to read "Driving safety precautions" (P.5-9).

OFF-ROAD RECOVERY

If the right side or left side wheels unintentionally leave the road surface, maintain control of the vehicle by following the procedure below. Please note that this procedure is only a general guide. The vehicle must be driven as appropriate based on the conditions of the vehicle, road and traffic.

1. Remain calm and do not overreact.
2. Do not apply the brakes.
3. Maintain a firm grip on the steering wheel with both hands and try to hold a straight course.
4. When appropriate, slowly release the accelerator pedal to gradually slow the vehicle.
5. If there is nothing in the way, steer the vehicle to follow the road while the vehicle speed is reduced. Do not attempt to drive the vehicle back onto the road surface until vehicle speed is reduced.
6. When it is safe to do so, gradually turn the steering wheel until both tires return to the road surface. When all tires are on the road surface, steer the vehicle to stay in the appropriate driving lane.
   - If you decide that it is not safe to return the vehicle to the road surface based on vehicle, road or traffic conditions, gradually slow the vehicle to a stop in a safe place off the road.

RAPID AIR PRESSURE LOSS

Rapid air pressure loss or a “blow-out” can occur if the tire is punctured or is damaged due to hitting a curb or pothole. Rapid air pressure loss can also be caused by driving on under-inflated tires.

Rapid air pressure loss can affect the handling and stability of the vehicle, especially at highway speeds.

Help prevent rapid air pressure loss by maintaining the correct air pressure and visually inspect the tires for wear and damage. See “Wheels and tires” (P.8-29) of this manual.

If a tire rapidly loses air pressure or “blows-out” while driving maintain control of the vehicle by following the procedure below. Please note that this procedure is only a general guide. The vehicle must be driven as appropriate based on the conditions of the vehicle, road and traffic.

WARNING

The following actions can increase the chance of losing control of the vehicle if there is a sudden loss of tire air pressure. Losing control of the vehicle may cause a collision and result in personal injury.

- **The vehicle generally moves or pulls in the direction of the flat tire.**
- **Do not rapidly apply the brakes.**
- **Do not rapidly release the accelerator pedal.**
- **Do not rapidly turn the steering wheel.**

1. Remain calm and do not overreact.
2. Maintain a firm grip on the steering wheel with both hands and try to hold a straight course.
3. When appropriate, slowly release the accelerator pedal to gradually slow the vehicle.
4. Gradually steer the vehicle to a safe location off the road and away from traffic if possible.
5. Lightly apply the brake pedal to gradually stop the vehicle.
6. Turn on the hazard warning flashers and either contact a roadside emergency service to change the tire or see “Changing a flat tire” (P.6-4) of this Owner’s Manual.

DRINKING ALCOHOL/DRUGS AND DRIVING

WARNING

Never drive under the influence of alcohol or drugs. Alcohol in the bloodstream reduces coordination, delays reaction time and impairs judgement. Driving after drinking alcohol increases the likelihood of being involved in an accident injuring yourself and others. Additionally, if you are injured in an accident, alcohol can increase the severity of the injury.

INFINITI is committed to safe driving. However, you must choose not to drive under the influence of alcohol. Every year thousands of people are injured or killed in alcohol-related accidents. Although the local laws vary on what is considered to be legally intoxicated, the fact is that alcohol affects all people differently and most people underestimate the effects of alcohol.

Remember, drinking and driving don’t mix! And that is true for drugs, too (over-the-counter, prescription, and illegal drugs).

Don't drive if your ability to operate your vehicle is impaired by alcohol, drugs, or some other physical condition.

DRIVING SAFETY PRECAUTIONS

Your INFINITI is designed for both normal and off-road use. However, avoid driving in deep water or mud as your INFINITI is mainly designed for leisure use, unlike a conventional off-road vehicle.

Remember that Two-Wheel Drive (2WD) models are less capable than All-Wheel Drive (AWD) models for rough road driving and extrication when stuck in deep snow, mud, or the like.

Please observe the following precautions:

WARNING

- **Drive carefully when off the road and avoid dangerous areas. Every person who drives or rides in this vehicle should be seated with their seat belt fastened. This will keep you and your passengers in position when driving over rough terrain.**
- **Do not drive across steep slopes. Instead drive either straight up or straight down the slopes. Off-road vehicles can tip over sideways much more easily than they can forward or backward.**
- **Many hills are too steep for any vehicle. If you drive up them, you may stall. If you drive down them, you may not be able to control your speed. If you drive across them, you may roll over.**
- **Do not shift ranges while driving on downhill grades as this could cause loss of control of the vehicle.**
- **Stay alert when driving to the top of a hill. At the top there could be a drop-off or other hazard that could cause an accident.**
- **If your engine stalls or you cannot make it to the top of a steep hill, never attempt to turn around. Your vehicle could tip or roll over. Always back straight down in R (Reverse) range. Never back down in N (Neutral), using only the brake, as this could cause loss of control.**
- **Heavy braking going down a hill could cause your brakes to overheat and fade, resulting in loss of control and an accident. Apply brakes lightly and use a low range to control your speed.**
- **Unsecured cargo can be thrown around when driving over rough terrain. Properly secure all cargo so it will not be thrown forward and cause injury to you or your passengers.**
- **To avoid raising the center of gravity excessively, do not exceed the rated capacity of the roof rack (if so equipped) and evenly distribute the load. Secure heavy loads in the cargo area as far forward and as low as possible. Do not equip the vehicle with tires larger than specified in this manual. This could cause your vehicle to roll over.**
- **Do not grip the inside or spokes of the steering wheel when driving off-road. The steering wheel could move suddenly and injure your hands. Instead drive with your fingers and thumbs on the outside of the rim.**
- **Before operating the vehicle, ensure that the driver and all passengers have their seat belts fastened.**
- **Always drive with the floor mats in place as the floor may became hot.**
- **Lower your speed when encountering strong crosswinds. With a higher center of gravity, your INFINITI is more affected**

by strong side winds. Slower speeds ensure better vehicle control.

- Do not drive beyond the performance capability of the tires, even with AWD engaged.
- For AWD equipped vehicles, do not attempt to raise two wheels off the ground and shift the transmission to any drive or reverse position with the engine running. Doing so may result in drivetrain damage or unexpected vehicle movement which could result in serious vehicle damage or personal injury.
- Do not attempt to test an AWD equipped vehicle on a 2-wheel dynamometer (such as the dynamometers used by some states for emissions testing), or similar equipment even if the other two wheels are raised off the ground. Make sure you inform test facility personnel that your vehicle is equipped with AWD before it is placed on a dynamometer. Using the wrong test equipment may result in drivetrain damage or unexpected vehicle movement which could result in serious vehicle damage or personal injury. (AWD models)
- When a wheel is off the ground due to an unlevel surface, do not spin the wheel excessively.
- Accelerating quickly, sharp steering maneuvers or sudden braking may cause loss of control.
- If at all possible, avoid sharp turning maneuvers, particularly at high speeds. Your vehicle has a higher center of gravity than a conventional passenger car. The vehicle is not designed for cornering at the same speeds as conventional passenger cars. Failure to operate this vehicle correctly could result in loss of control and/or a rollover accident.
- Always use tires of the same type, size, brand, construction (bias, bias-belted or radial), and tread pattern on all four wheels. Install tire chains on the rear wheels when driving on slippery roads and drive carefully.
- Be sure to check the brakes immediately after driving in mud or water. See “Brake system” (P.5-79) for wet brakes.
- Avoid parking your vehicle on steep hills. If you get out of the vehicle and it rolls forward, backward or sideways, you could be injured.
- Whenever you drive off-road through sand, mud or water as deep as the wheel hub, more frequent maintenance may be required. See the maintenance information in the “INFINITI Service and Maintenance Guide”.
- Spinning the rear wheels on slippery surfaces may cause the AWD warning light to flash and the AWD system to automatically switch from the AWD mode to the 2WD mode. This could reduce traction. Be especially careful when towing a trailer. (AWD models)

WARNING

Do not operate the push-button ignition switch while driving the vehicle except in an emergency. (The engine will stop when the ignition switch is pushed 3 consecutive times or the ignition switch is pushed and held for more than 2 seconds.) If the engine stops while the vehicle is being driven, this could lead to a crash and serious injury.

Before operating the push-button ignition switch, be sure to move the shift lever to the P (Park) position.

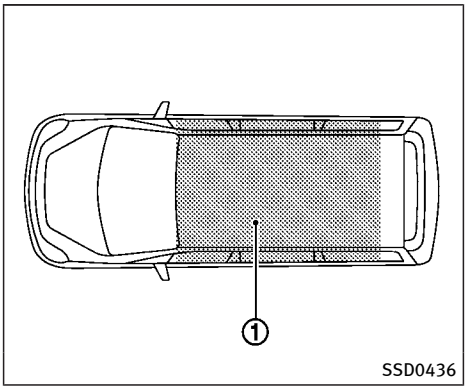

OPERATING RANGE FOR ENGINE START FUNCTION

The Intelligent Key can only be used for starting the engine when the Intelligent Key is within the specified operating range ①.

When the Intelligent Key battery is almost discharged or strong radio waves are present near the operating location, the Intelligent Key system's operating range becomes narrower and may not function properly.

If the Intelligent Key is within the operating range, it is possible for anyone, even someone who does not carry the Intelligent Key, to push the ignition switch to start the engine.

- The cargo area is not included in the operating range but the Intelligent Key may function.
- If the Intelligent Key is placed on the instrument panel, inside the glove box or door pocket, the Intelligent Key may not function.
- If the Intelligent Key is placed near the door or window outside the vehicle, the Intelligent Key may function.

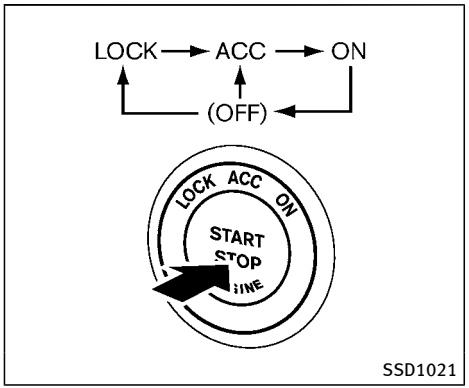

PUSH-BUTTON IGNITION SWITCH OPERATION

When the ignition switch is pushed without depressing the brake pedal, the ignition switch position will change as follows:

- Push center once to change to ACC.
- Push center two times to change to ON.
- Push center three times to change to OFF. (No position illuminates.)
- Push center four times to return to ACC.
- Open or close any door to return to LOCK during the OFF position.

The ignition lock is designed so that the ignition switch position cannot be switched to LOCK until the shift lever is moved to the P (Park) position.

When the ignition switch cannot be pushed toward the LOCK position, proceed as follows:

1. Move the shift lever into the P (Park) position.
2. Push the ignition switch to the OFF position. The ignition switch position indicator will not illuminate.
3. Open the door. The ignition switch will change to the LOCK position.

The shift lever can be moved from the P (Park) position if the ignition switch is in the ON position and the brake pedal is depressed.

If the battery of the vehicle is discharged, the push-button ignition switch cannot be turned from the LOCK position.

Some indicators and warnings for operation are displayed on the vehicle information display between the speedometer and tachometer. (See “Vehicle information display” (P.2-22).)

PUSH-BUTTON IGNITION SWITCH POSITIONS

LOCK (Normal parking position)

The ignition switch can only be locked in this position.

The ignition switch will be unlocked when it is pushed to the ACC position while carrying the Intelligent Key or with the Intelligent Key inserted in the port.

ACC (Accessories)

This position activates electrical accessories such as the radio, when the engine is not running.

ON (Normal operating position)

This position turns on the ignition system and electrical accessories.

OFF

The engine can be turned off in this position.

The ignition lock is designed so that the ignition switch cannot be switched to the LOCK position until the shift lever is moved to the P (Park) position.

CAUTION

Do not leave the vehicle with the push-button ignition switch in ACC or ON positions when the engine is not running for an extended period. This can discharge the battery.

EMERGENCY ENGINE SHUT OFF

To shut off the engine in an emergency situation while driving perform the following procedure:

- Rapidly push the push-button ignition switch 3 consecutive times in less than 1.5 seconds, or
- Push and hold the push-button ignition switch for more than 2 seconds.

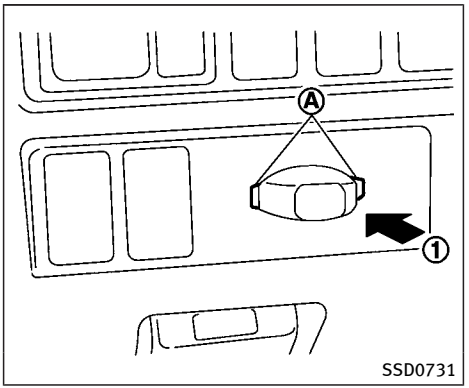

INTELLIGENT KEY BATTERY DISCHARGE

If the battery of the Intelligent Key is almost discharged, the guide light Ⓐ of the Intelligent Key port blinks and the indicator appears on the vehicle information display. (See "Vehicle information display" (P.2-22).)

In this case, inserting the Intelligent Key into the port ① allows you to start the engine. Make sure that the key ring side faces backward as illustrated. Insert the Intelligent Key in the port until it is latched and secured.

To remove the Intelligent Key from the port, push the ignition switch to the OFF position and pull the Intelligent Key out of the port.

NOTE:

The Intelligent Key port does not charge the Intelligent Key battery. If you see the low battery indicator in the vehicle information display, replace the battery as soon as possible. (See "Intelligent Key battery replacement" (P.8-24).)

CAUTION

- **Never place anything except the Intelligent Key in the Intelligent Key port. Doing so may cause damage to the equipment.**
- **Make sure the Intelligent Key is in the correct direction when inserting it to the Intelligent Key port. The engine may not start if it is in the incorrect direction.**
- **Remove the Intelligent Key from the Intelligent Key port after the ignition switch is pushed to the OFF position.**

BEFORE STARTING THE ENGINE

- Make sure the area around the vehicle is clear.
- Check fluid levels such as engine oil, coolant, brake fluid and window washer fluid as frequently as possible, or at least whenever you refuel.
- Check that all windows and lights are clean.
- Visually inspect tires for their appearance and condition. Also check tires for proper inflation.
- Lock all doors.
- Position seat and adjust head restraints.
- Adjust inside and outside mirrors.
- Fasten seat belts and ask all passengers to do likewise.
- Check the operation of warning lights when the ignition switch is pushed to the ON position. (See “Warning/indicator lights and audible reminders” (P.2-13).)

STARTING THE ENGINE

1. Apply the parking brake.
2. Move the shift lever to the P (Park) or N (Neutral) position. (P is recommended.)

   The starter is designed not to operate unless the shift lever is in either of the above positions.
3. Push the ignition switch to the ON position. Depress the brake pedal and push the ignition switch to start the engine.

   To start the engine immediately, push and release the ignition switch while depressing the brake pedal with the ignition switch in any position.
   - If the engine is very hard to start in extremely cold weather or when restarting, depress the accelerator pedal a little (approximately 1/3 to the floor) and while holding, crank the engine. Release the accelerator pedal when the engine starts.
   - If the engine is very hard to start because it is flooded, depress the accelerator pedal all the way to the floor and hold it. Push the ignition switch to the ON position to start cranking the engine. After 5 or 6 seconds, stop cranking by pushing the ignition switch to OFF. After cranking the engine, release the accelerator pedal. Crank the engine **with your foot off the accelerator pedal** by depressing the brake pedal and pushing the push-button ignition switch to start the engine. If the engine starts, but fails to run, repeat the above procedure.

CAUTION

Do not operate the starter for more than 15 seconds at a time. If the engine does not start, push the ignition switch to OFF and wait 10 seconds before cranking again, otherwise the starter could be damaged.

4. **Warm-up**

   Allow the engine to idle for at least 30 seconds after starting. Do not race the engine while warming it up. Drive at moderate speed for a short distance first, especially in cold weather. In cold weather, keep the engine running for a minimum of 2 - 3 minutes before shutting it off. Starting and stopping the engine over a short period of time may make the vehicle more difficult to start.

5. To stop the engine, shift the shift lever to the P (Park) position and push the ignition switch to the OFF position.

NOTE:

Care should be taken to avoid situations that can lead to potential battery discharge and potential no-start conditions such as:

1. **Installation or extended use of electronic accessories that consume battery power when the engine is not running (Phone chargers, GPS, DVD players, etc.)**
2. **Vehicle is not driven regularly and/or only driven short distances.**

In these cases, the battery may need to be charged to maintain battery health.

AUTOMATIC TRANSMISSION

7 speed automatic transmission

The automatic transmission in your vehicle is electronically controlled by a transmission control module to produce maximum efficiency and smooth operation.

Shown on the following pages are the recommended operating procedures for this transmission. Follow these procedures for maximum vehicle performance and driving enjoyment.

Starting the vehicle

After starting the engine, fully depress the foot brake pedal and push the shift lever button before shifting the shift lever to the R (Reverse), N (Neutral), D (Drive), DS (Drive Sport) or Manual shift mode position. Be sure the vehicle is fully stopped before attempting to shift the shift lever.

This automatic transmission model is designed so that the foot brake pedal must be depressed before shifting from P (Park) to any drive position while the ignition switch position is ON.

The shift lever cannot be moved out of the P (Park) position and into any of the other gear positions if the ignition switch is pushed to the LOCK, OFF or ACC position.

1. Keep the foot brake pedal depressed and push the shift lever button to shift into a driving gear.
2. Release the parking brake and foot brake, then gradually start the vehicle in motion.

WARNING

- **Do not depress the accelerator pedal while shifting from P (Park) or N (Neutral) to R (Reverse), D (Drive), DS (Drive Sport) or manual shift mode. Always depress the brake pedal until shifting is completed. Failure to do so could cause you to lose control and have an accident.**
- **Cold engine idle speed is high, so use caution when shifting into a forward or reverse gear before the engine has warmed up.**
- **Never shift to P (Park) or R (Reverse) while vehicle is moving forward. Never shift to P (Park), D (Drive) or DS (Drive Sport) while vehicle is moving rearward.**

Failure to do so could cause you to lose control and have an accident.

CAUTION

- **Except in an emergency, do not shift to the N (Neutral) position while driving. Coasting with the transmission in the N (Neutral) position may cause serious damage to the transmission.**
- **When stopping the vehicle on an uphill grade, do not hold the vehicle by depressing the accelerator pedal. The foot brake should be used for this purpose.**
- **Do not downshift abruptly on slippery roads. This may cause a loss of control.**

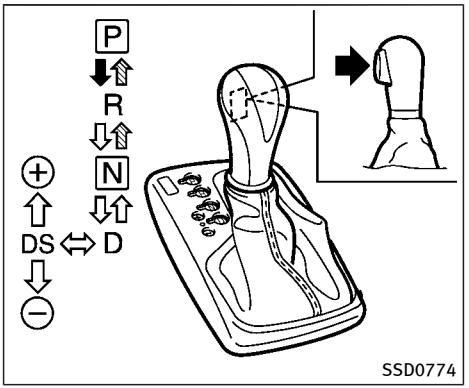

Shift lever

To move the shift lever,

➡: Push the button while depressing the brake pedal,

⇨: Push the button,

⇨: Just move the shift lever.

Shifting

After starting the engine, fully depress the brake pedal and shift the shift lever from P (Park) to R (Reverse), N (Neutral), D (Drive), DS (Drive Sport) or Manual shift mode position.

Push the button to shift into P (Park) or R (Reverse). All other positions can be selected without pushing the button.

WARNING

Apply the parking brake if the shift lever is in any position while the engine is not running. Failure to do so could cause the vehicle to move unexpectedly or roll away and result in serious personal injury or property damage.

CAUTION

Make sure the vehicle is completely stopped and the transmission is in the P (Park) position.

P (Park) position:

Use this position when the vehicle is parked or when starting the engine. Make sure the vehicle is completely stopped. **The brake pedal must be depressed and the shift lever button pushed in to move the shift lever from the N (Neutral) position or any drive position to the P (Park) position.** Apply the parking brake. When parking on a hill, apply the parking brake first, then move the shift lever to the P (Park)

position.

CAUTION

Use this position only when the vehicle is completely stopped.

R (Reverse):

Use this position to back up. Always be sure the vehicle is completely stopped before selecting the R (Reverse) position. **The brake pedal must be depressed and the shift lever button pushed in to move the shift lever from the P (Park) position, the N (Neutral) position or any drive position to the R (Reverse) position.**

N (Neutral):

Neither forward nor reverse gear is engaged. The engine can be started in this position. You may shift to the N (Neutral) position and restart a stalled engine while the vehicle is moving.

D (Drive):

Use this position for all normal forward driving.

DS (Drive Sport) mode

When the shift lever is shifted from the D (Drive) position to the manual shift gate, the transmission enters the DS (Drive Sport) mode.

Moving the shift lever to the DS (Drive Sport) position allows you to enjoy comfortable driving on a winding road and feel smooth acceleration or deceleration on a hilly road by moving in a lower gear automatically.

When canceling the DS mode, return the shift lever to the D (Drive) position. The transmission returns to the normal driving mode.

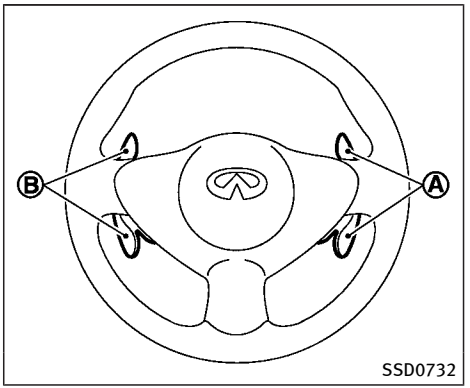

Paddle shifters (If so equipped)

Manual shift mode

When the shift lever is in the DS (Drive Sport) position, the transmission is ready for the manual shift mode. Shift ranges can be selected manually by moving the shift lever up or down, or pulling the right-side or left-side paddle shifter.

When shifting up, move the shift lever to the + (up) side or pull the right-side paddle shifter (+) Ⓐ (if so equipped). The transmission shifts to the higher range.

When shifting down, move the shift lever to the – (down) side or pull the left-side paddle shifter (–) Ⓑ (if so equipped). The

transmission shifts to the lower range.

When canceling the manual shift mode, return the shift lever to the D (Drive) position. The transmission returns to the normal driving mode.

When you pull the paddle shifter (if so equipped) while in the D (Drive) position, the transmission will shift to the upper or lower range temporarily. The transmission will automatically return to the D (Drive) position after a short period of time. If you want to return to the D (Drive) position manually, pull and hold the paddle shifter for about 1.5 seconds.

In the manual shift mode, the shift range is displayed on the position indicator in the meter.

Shift ranges up or down one by one as follows:

$^{M}1 \rightleftarrows {}^{M}2 \rightleftarrows {}^{M}3 \rightleftarrows {}^{M}4 \rightleftarrows {}^{M}5 \rightleftarrows {}^{M}6 \rightleftarrows {}^{M}7$

^{M}7 (7th):

Use this position for all normal forward driving at highway speeds.

^{M}6 (6th) and ^{M}5 (5th):

Use this position when driving up long slopes, or for engine braking when driving down long slopes.

^{M}4 (4th), ^{M}3 (3rd) and ^{M}2 (2nd):

Use these positions for hill climbing or engine braking on downhill grades.

^{M}1 (1st):

Use this position when climbing steep hills slowly or driving slowly through deep snow, or for maximum engine braking on steep downhill grades.

- Remember not to drive at high speeds for extended periods of time in lower than 7th gear. This reduces fuel economy.
- Moving the shift lever rapidly to the same side twice will shift the ranges in succession.
- **In the manual shift mode, the transmission may not shift to the selected gear or may automatically shift to the other gear depending on conditions. This helps maintain driving performance and reduces the chance of vehicle damage or loss of control.**
- **When the transmission does not shift to the selected gear, the Automatic Transmission (AT) position indicator light (on the vehicle information display) will blink and the buzzer will sound.**
- **In the manual shift mode, the transmission automatically shifts down to 1st gear before the vehicle comes to a stop. When accelerating again, it is necessary to shift up to the desired range.**

Accelerator downshift — In D (Drive) position —

For passing or hill climbing, fully depress the accelerator pedal to the floor. This shifts the transmission down into the lower gear, depending on the vehicle speed.

Fail-safe

When the fail-safe operation occurs, note that the transmission will be locked in any of the forward gears according to the condition.

If the vehicle is driven under extreme conditions, such as excessive wheel spinning and subsequent hard braking, the fail-safe system may be activated. This will occur even if all electrical circuits are functioning properly. In this case, push the switch to the OFF position and wait for 3 seconds. Then push the ignition switch back to the ON position. The vehicle

should return to its normal operating condition. If it does not return to its normal operating condition, have an INFINITI retailer check the transmission and repair if necessary.

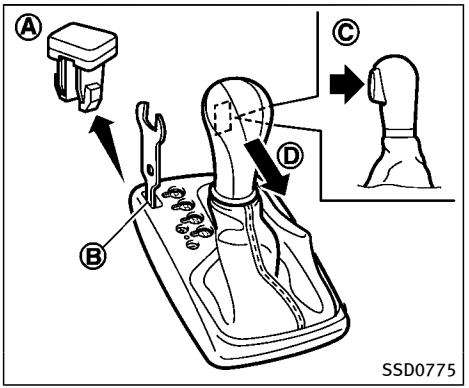

Shift lock release

If the battery charge is low or discharged, the shift lever may not be moved from the P (Park) position even with the brake pedal depressed and the shift lever button pushed.

To move the shift lever, perform the following procedure:

1. Push the ignition switch to the OFF or LOCK position.
2. Apply the parking brake.
3. Remove the shift lock cover Ⓐ using a suitable tool.
4. Push down the shift lock Ⓑ as illustrated.
5. Push the shift lever button Ⓒ and move the shift lever to N (Neutral) position Ⓓ while holding down the shift lock.

Push the ignition switch to the ON position. Now the vehicle may be moved to the desired location.

If the lever cannot be moved out of P (Park), have an INFINITI retailer check the automatic transmission system as soon as possible.

Adaptive shift control (ASC)

The adaptive shift control system automatically operates when the transmission is in the "D" (drive) and "DS" (Drive Sport) position and selects an appropriate gear depending on the road conditions such as uphill, downhill or curving roads.

Control on uphill and curving roads:

A low gear is maintained that suits the degree of the slope or curve to allow smooth driving with a small number of shifts.

Control on downhill roads:

The adaptive shift control system shifts to a low gear that suits the degree of the slope, and uses the engine braking to reduce the number of times that the brake must be used.

Control on winding roads:

A low gear is maintained on continuous curves that involve repeated acceleration and deceleration, so that smooth acceleration is available instantly when the accelerator pedal is depressed.

NOTE:

- **Adaptive shift control may not operate when the transmission oil temperature is low immediately after the start of driving or when it is very hot.**
- **During some driving situations, hard braking for example, the adaptive shift control may automatically operate. The transmission may automatically shift to a lower gear for engine braking. This increases engine speed but not vehicle speed. Vehicle speed is controlled by the accelerator pedal when the vehicle is in the Adaptive shift control mode.**
- **When the adaptive shift control operates, the transmission sometimes maintains a lower gear for a longer period of time than when adaptive shift control is not operating. Engine speed will be higher for a specific vehicle speed while ASC system is operating than when ASC is not operating.**

PARKING BRAKE

WARNING

- **Be sure the parking brake is fully released before driving. Failure to do so can cause brake failure and lead to an accident.**
- **Do not release the parking brake from outside the vehicle.**
- **Do not use the gear shift in place of the parking brake. When parking, be sure the parking brake is fully engaged.**
- **Do not leave children unattended in a vehicle. They could release the parking brake and cause an accident.**

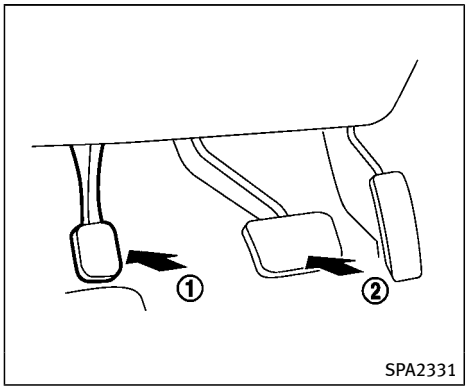

To apply: Fully depress the parking brake pedal ①.

To release:

1. Firmly apply the foot brake ②.
2. Depress the parking brake pedal ① and the parking brake will be released.
3. Before driving, be sure the brake warning light goes out.

LANE DEPARTURE WARNING (LDW) SYSTEM/LANE DEPARTURE PREVENTION (LDP) SYSTEM (if so equipped)

The Lane Departure Warning (LDW) system/Lane Departure Prevention (LDP) system will operate when the vehicle is driven at speeds of approximately 45 MPH (70 km/h) and above, and only when the lane markings are clearly visible on the road.

Each system functions as follows:

- Lane Departure Warning (LDW) system — warns the driver with a warning light and chime that the vehicle is beginning to leave the driving lane.
- Lane Departure Prevention (LDP) system — warns the driver with a warning light and chime, and helps assist the driver to return the vehicle to the center direction of the traveling lane by applying the brakes to the left or right wheels individually (for a short period of time).

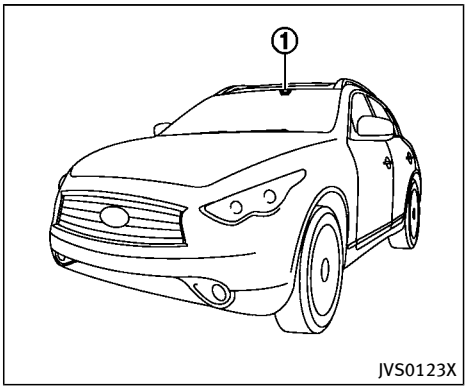

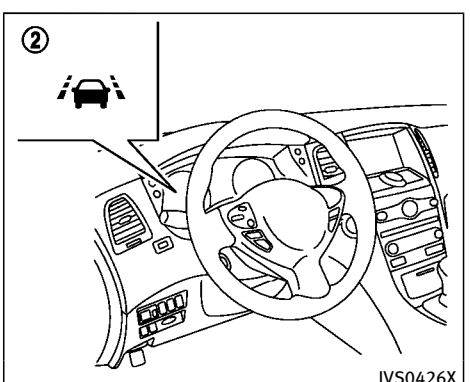

The LDW and LDP systems monitor the lane

markers on the traveling lane using the camera unit ① located above the inside mirror. When the camera unit detects that the vehicle is traveling close to either the left or the right of the traveling lane, the Lane Departure Warning (LDW) indicator light ② on the instrument panel blinks in orange and a warning chime sounds. When the LDP system is on, it will automatically apply the brakes for a short period of time, using the function of the Vehicle Dynamic Control (VDC) system.

LANE DEPARTURE WARNING (LDW) SYSTEM

Precautions on LDW system

WARNING

- **This system is only a warning device to inform the driver of a potential unintended lane departure. It will not steer the vehicle or prevent loss of control. It is the driver's responsibility to stay alert, drive safely, keep the vehicle in the traveling lane, and be in control of the vehicle at all times.**
- **The system will not operate at speeds below approximately 45 MPH (70 km/h) or if it cannot detect lane markers.**
- **If the LDW system malfunctions, it will cancel automatically, and the LDW indicator light (orange) will illuminate.**
- **If the LDW indicator light (orange) illuminates, pull off the road to a safe location and stop the vehicle. Place the shift lever in the P (Park) position, turn the engine off and restart the engine. If the LDW indicator light (orange) continues to illuminate, have the system checked by an INFINITI retailer.**
- **Excessive noise will interfere with the warning chime sound, and the chime may not be heard.**
- **Do not use the LDW system under the following conditions as it may not function properly:**
  - **— During bad weather (rain, fog, snow, wind, etc.).**
  - **— When driving on slippery roads, such as on ice or snow, etc.**
  - **— When driving on winding or uneven roads.**
  - **— When there is a lane closure due to road repairs.**
  - **— When driving in a makeshift or temporary lane.**
  - **— When driving on roads where the lane width is too narrow.**
  - **— When driving without normal tire conditions (for example, tire wear, low tire pressure, installation of spare tire, tire chains, non-standard wheels).**
  - **— When the vehicle is equipped with non-original brake parts or suspension parts.**
  - **— When you are towing a trailer or other vehicle.**
- **The system may not function properly under the following conditions:**
  - **— On roads where there are multiple parallel lane markers; lane markers that are faded or not painted clearly; yellow painted lane markers; non-standard lane markers; or lane markers covered with water, dirt, snow, etc.**
  - **— On roads where the discontinued lane markers are still detectable.**

— On roads where there are sharp curves.

— On roads where there are sharply contrasting objects, such as shadows, snow, water, wheel ruts, seams or lines remaining after road repairs. (The LDW system could detect these items as lane markers.)

— On roads where the traveling lane merges or separates.

— When the vehicle's traveling direction does not align with the lane marker.

— When traveling close to the vehicle in front of you, which obstructs the lane camera unit detection range.

— When rain, snow or dirt adheres to the windshield in front of the lane camera unit.

— When the headlights are not bright due to dirt on the lens or if the aiming is not adjusted properly.

— When strong light enters the lane camera unit. (For example, the light directly shines on the front of the vehicle at sunrise or sunset.)

— When a sudden change in brightness occurs. (For example, when the vehicle enters or exits a tunnel or under a bridge.)

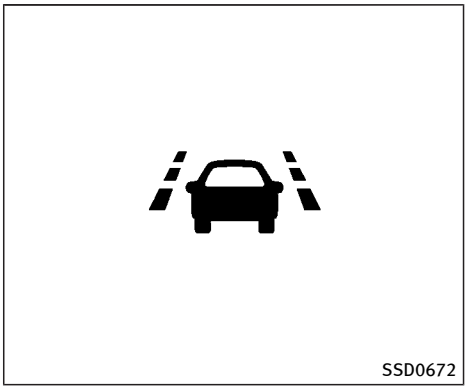

LDW indicator light (orange)

LDW system operation

The LDW system provides a lane departure warning function when the vehicle is driven at speeds of approximately 45 MPH (70 km/h) and the lane markings are clear. When the vehicle approaches either the left or the right side of the traveling lane, a warning chime will sound and the LDW indicator light (orange) on the instrument panel will blink to alert the driver.

The warning function will stop when the vehicle returns inside of the lane markers.

The LDW system is not designed to warn under the following conditions.

- When you operate the lane change signal and change traveling lanes in the direction of the signal. (The LDW system will become operable again approximately 2 seconds after the lane change signal is turned off.)
- When the vehicle speed lowers to less than approximately 45 MPH (70 km/h).

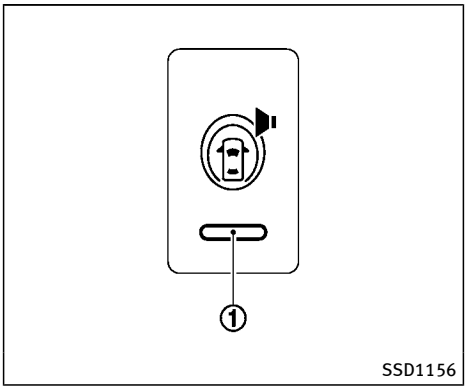

Warning systems switch

How to enable/disable the LDW system

The LDW system has an automatic setting mode and a manual setting mode. The setting mode can be changed. In the automatic setting mode, the LDW system is automatically turned on when the ignition switch is pushed to the ON position. When the LDW system is on, the warning systems ON indicator ① on the warning systems switch illuminates. To cancel the LDW system, push the warning systems switch. The warning systems ON indicator will turn off. To turn on the system, push the warning systems switch again.

When the warning systems switch is pushed, the FCW system will also turn on or off simultaneously. See “FCW system operation” (P.5-70).

In the manual setting mode, you need to push the warning systems switch to turn on the system after the ignition switch is pushed to the ON position.

The setting mode can be changed using the warning systems switch. To change the setting mode, push and hold the warning systems switch for more than 4 seconds when the warning systems ON indicator is off. When the mode is changed, a chime sounds and the LDW indicator light (orange) flashes.

Temporary disabled status at high temperature

If the vehicle is parked in direct sunlight under high temperature conditions (over approximately 104°F (40°C) and then started, the LDW system may be deactivated automatically. The warning systems ON indicator on the switch will flash.

When the interior temperature is reduced, the LDW system will resume operating automatically and the warning systems

ON indicator will stop flashing.

LANE DEPARTURE PREVENTION (LDP) SYSTEM

Precautions on LDP system

WARNING

- **The LDP system will not steer the vehicle or prevent loss of control. It is the driver's responsibility to stay alert, drive safely, keep the vehicle in the traveling lane, and be in control of vehicle at all times.**
- **The LDP system is primarily intended for use on well-developed freeways or highways. It may not detect the lane markers in certain roads, weather or driving conditions.**
- **Using the LDP system under some conditions of road, lane marker or weather, or when you change lanes without using the lane change signal could lead to an unexpected system operation. In such conditions, you need to correct the vehicle's direction with your steering operation to avoid accidents.**
- **When the LDP system is operating, avoid excessive or sudden steering maneuvers. Otherwise, you could lose control of the vehicle.**
- **The LDP system will not operate at speeds below approximately 45 MPH (70 km/h) or if it cannot detect lane markers.**
- **Do not use the LDP system under the following conditions as it may not function properly:**
  - **— During bad weather (rain, fog, snow, wind, etc.).**
  - **— When driving on slippery roads, such as on ice or snow, etc.**
  - **— When driving on winding or uneven roads.**
  - **— When there is a lane closure due to road repairs.**
  - **— When driving in a makeshift or temporary lane.**
  - **— When driving on roads where the lane width is too narrow.**
  - **— When driving without normal tire conditions (for example, tire wear, low tire pressure, installation of spare tire, tire chains, non-standard wheels).**
  - **— When the vehicle is equipped with nonoriginal brake parts or suspension parts.**
  - **— When you are towing a trailer or other vehicle.**
- **If the LDP system malfunctions, it will cancel automatically. The LDW indicator light (orange) on the instrument panel will illuminate.**
- **If the LDW indicator light (orange) illuminates, pull off the road to a safe location and stop the vehicle. Place the shift lever in the P (Park) position, turn the engine off and restart the engine. If the LDW indicator light (orange) continues to illuminate, have the LDP system checked by an INFINITI retailer.**
- **Excessive noise will interfere with the warning chime sound, and the chime may not be heard.**

The functions of the LDP system (warning and system application of the brakes) may or may not operate properly under the following conditions:

- On roads where there are multiple parallel lane markers; lane markers that are faded or not painted clearly; yellow painted lane markers; non-standard lane markers; or lane markers covered with water, dirt, snow, etc.
- On roads where discontinued lane markers are still detectable.
- On roads where there are sharp curves.
- On roads where there are sharply contrasting objects, such as shadows, snow, water, wheel ruts, seams or lines remaining after road repairs. (The LDP system could detect these items as lane markers.)
- On roads where the traveling lane merges or separates.
- When the vehicle's traveling direction does not align with the lane marker.
- When traveling close to the vehicle in front of you, which obstructs the lane camera unit detection range.
- When rain, snow or dirt adheres to the windshield in front of the lane camera unit.
- When the headlights are not bright due to dirt on the lens or if the aiming is not adjusted properly.
- When strong light enters the lane camera unit. (For example, the light directly shines on the front of the vehicle at sunrise or sunset.)
- When a sudden change in brightness occurs. (For example, when the vehicle enters or exits a tunnel or under a bridge.)

While the LDP system is operating, you may hear a sound of brake operation. This is normal and indicates that the LDP system is operating properly.

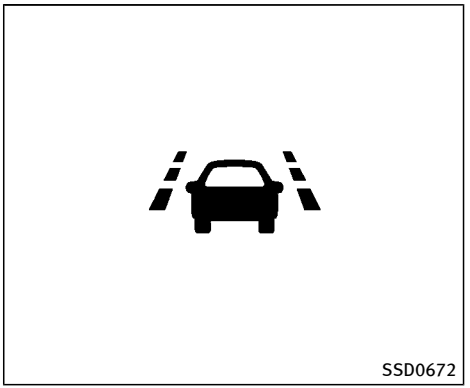

LDW indicator light (green/orange)

LDP system operation

The LDP system provides a lane departure warning and can automatically apply the brakes when the vehicle is driven at speeds of approximately 45 MPH (70 km/h) and above. When the vehicle approaches either the left or the right side of the traveling lane, a warning chime will sound and the LDW indicator light (orange) on the instrument panel will blink to alert the driver. Then, the LDP system will automatically apply the brakes for a short period of time to help assist the driver to return the vehicle to the center of the

traveling lane.

The warning and assist functions will stop when the vehicle returns to a position inside of the lane marker.

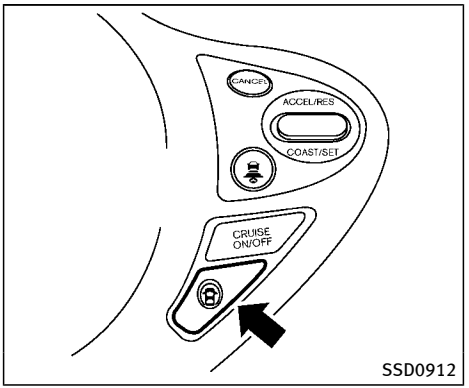

Dynamic driver assistance switch

To turn on the LDP system, push the dynamic driver assistance switch on the steering wheel after starting the engine. The LDW indicator light (green) on the instrument panel will illuminate. Push the dynamic driver assistance switch again to turn off the LDP system. The LDW indicator light will turn off.

The dynamic driver assistance switch is used as both the LDP and DCA system. When the dynamic driver assistance switch is pushed, the DCA system will also turn on or off simultaneously. The LDP system can be individually set to on or off on the display. If the system is set to off, the system will not turn on even if the dynamic driver assistance switch is pushed to on. To set the system to on or off on the display, see “How to enable/disable the LDP system” (P.5-28).

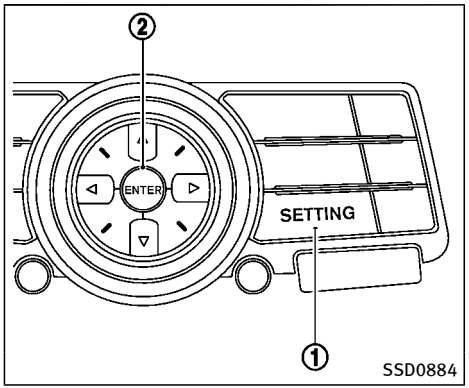

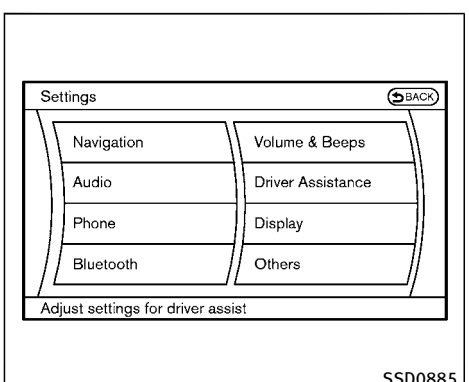

How to enable/disable the LDP system

1. Push the SETTING ① button and highlight the “Driver Assistance” key on the display using the INFINITI controller. Then push the ENTER ② button.
2. Highlight the “Dynamic Assistance settings” key, and push the ENTER ② button.

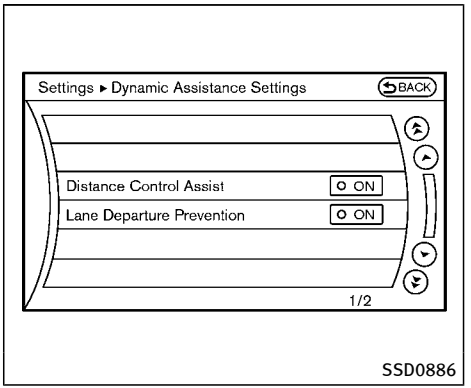

3. To set the LDP system to on or off, highlight the “Lane Departure Prevention” key, select ON or OFF and push the ENTER ② button.

If both the LDP and DCA systems are set to OFF on the display, when the dynamic driver assistance switch is pushed, the LDW indicator light and the Distance Control Assist (DCA) system switch indicator light will blink for approximately 2 seconds. See “Distance Control Assist (DCA) system” (P.5-55).

Automatic deactivation

Condition A:

The warning and assist functions of the LDP system are not designed to work under the following conditions:

- When you operate the lane change signal and change the traveling lanes in the direction of the signal. (The LDP system will be deactivated for approximately 2 seconds after the lane change signal is turned off.)
- When the vehicle speed lowers to less than approximately 45 MPH (70 km/h).

After the above conditions have finished and the necessary operating conditions are satisfied, the warning and assist functions will resume.

Condition B:

The assist function of the LDP system is not designed to work under the following conditions (warning is still functional):

- When the brake pedal is depressed.
- When the steering wheel is turned as far as necessary for the vehicle to change lanes.
- When the accelerator pedal is applied during LDP system operation.
- When the Intelligent Cruise Control (ICC) approach warning occurs.
- When the hazard warning flashers are operated.
- When driving on a curve at high speed.

After the above conditions have finished and the necessary operating conditions are satisfied, the LDP system application of the brakes will resume.

Condition C:

Under the following conditions, a beep will sound and the LDP system will be canceled automatically. The LDW indicator light will blink in green, and the LDP system cannot be activated:

- When the VDC system (except TCS function) or ABS operates.
- When the VDC system is turned off.
- When the SNOW mode switch is turned on.

Action to take:

When the above conditions no longer exist, turn off the LDP system. Push the dynamic driver assistance switch again to turn the LDP system back on.

Temporary disabled status at high temperature:

If the vehicle is parked in direct sunlight under high temperature conditions (over approximately 104°F (40°C)) and then the LDP system is turned on, the LDP system may be deactivated automatically. The LDW indicator light (green) will blink.

When the interior temperature is reduced, the system will resume operating automatically and the LDW indicator light will stop blinking.

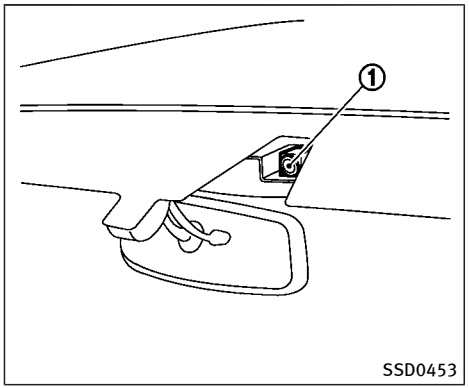

LANE CAMERA UNIT MAINTENANCE

The lane camera unit ① for the LDW/LDP system is located above the inside mirror. To keep the proper operation of the LDW/LDP systems and prevent a system malfunction, be sure to observe the following:

- Always keep the windshield clean.
- Do not attach a sticker (including transparent material) or install an accessory near the camera unit.
- Do not place reflective materials, such as white paper or a mirror, on the instrument panel. The reflection of sunlight may adversely affect the camera unit's capability of detecting the lane markers.
- Do not strike or damage the areas around the camera unit. Do not touch the camera lens or remove the screw located on the camera unit. If the camera unit is damaged due to an accident, contact an INFINITI retailer.

PRECAUTIONS ON CRUISE CONTROL

- If the cruise control system malfunctions, it will cancel automatically. The SET indicator on the vehicle information display will then blink to warn the driver.
- If the engine coolant temperature becomes excessively high, the cruise control system will be canceled automatically.
- If the SET indicator blinks, turn the cruise control main switch off and have the system checked by your INFINITI retailer.
- The SET indicator may sometimes blink when the cruise control main switch is turned ON while pushing the ACCELERATE/RESUME, COAST/SET or CANCEL switch. To properly set the cruise control system, perform the steps below in the order indicated.

WARNING

Do not use the cruise control when driving under the following conditions:

- **when it is not possible to keep the vehicle at a set speed**

- **in heavy traffic or in traffic that varies in speed**
- **on winding or hilly roads**
- **on slippery roads (rain, snow, ice, etc.)**
- **in very windy areas**

Doing so could cause a loss of vehicle control and result in an accident.

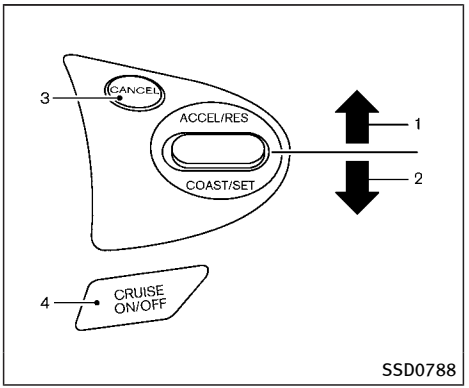

1. ACCELERATE/RESUME switch
2. COAST/SET switch
3. CANCEL switch
4. MAIN (ON·OFF) switch

CRUISE CONTROL OPERATIONS

The cruise control allows driving at a speed between 25 to 89 MPH (40 to 144 km/h) without keeping your foot on the accelerator pedal.

To turn on the cruise control, push the MAIN switch on. The CRUISE indicator will come on.

To set cruising speed, accelerate your vehicle to the desired speed, push the COAST/SET switch and release it. (The CRUISE SET indicator will come on in the instrument panel.) Take your foot off the accelerator pedal. Your vehicle will maintain the set speed.

- **To pass another vehicle,** depress the accelerator pedal. When you release the pedal, the vehicle will return to the previously set speed.
- The vehicle may not maintain the set speed on winding or hilly roads. If this happens, drive without the cruise control.

To cancel the preset speed, follow any of these methods:

1. Push the CANCEL button. The SET indicator will go out.
2. Tap the brake pedal. The SET indicator will go out.
3. Move the shift lever to the N (Neutral) position. The SET indicator will go out.
4. Turn the MAIN switch off. Both the CRUISE indicator and SET indicator will go out.

- If you depress the brake pedal while pushing the ACCELERATE/RESUME or COAST/SET switch and reset at the cruising speed, the cruise control will

disengage. Turn the MAIN switch off once and then turn it on again.

- The cruise control will automatically cancel if the vehicle slows more than 8 MPH (13 km/h) below the set speed.
- If you move the shift lever to the N (Neutral) position, the cruise control will be canceled.

To reset at a faster cruising speed, use one of the following methods:

- Depress the accelerator pedal. When the vehicle attains the desired speed, push and release the COAST/SET switch.
- Push and hold the ACCELERATE/RESUME switch. When the vehicle attains the speed you desire, release the switch.
- Push, then quickly release the ACCELERATE/RESUME switch. Each time you do this, the set speed will increase by about 1 MPH (1.6 km/h).

To reset at a slower cruising speed, use one of the following methods:

- Lightly tap the brake pedal. When the vehicle attains the desired speed, push the COAST/SET switch and release it.
- Push and hold the COAST/SET switch. Release the switch when the vehicle slows down to the desired speed.
- Push, then quickly release the COAST/SET switch. Each time you do this, the set speed will decrease by about 1 MPH (1.6 km/h).

To resume the preset speed, push and release the ACCELERATE/RESUME switch. The vehicle will resume the last set cruising speed when the vehicle speed is over 25 MPH (40 km/h).

INTELLIGENT CRUISE CONTROL (ICC) SYSTEM (FULL SPEED RANGE) (if so equipped)

The Intelligent Cruise Control (ICC) system maintains a selected distance from the vehicle in front of you within the speed range of 0 to 90 MPH (0 to 144 km/h) up to the set speed. The set speed can be selected by the driver between 20 to 90 MPH (32 to 144 km/h).

The vehicle travels at a set speed when the road ahead is clear.

The ICC system can be set to one of two cruise control modes.

- Vehicle-to-vehicle distance control mode:

  For maintaining a selected distance between your vehicle and the vehicle in front of you up to the preset speed.
- Conventional (fixed speed) cruise control mode:

  For cruising at a preset speed.

WARNING

- **Always drive carefully and attentively when using either cruise control mode. Read and understand the Owner's Manual thoroughly before using the cruise control. To avoid serious injury or death, do not rely on the system to prevent**

accidents or to control the vehicle's speed in emergency situations. Do not use cruise control except in appropriate road and traffic conditions.

- In the conventional (fixed speed) cruise control mode, a warning chime will not sound to warn you if you are too close to the vehicle ahead. Pay special attention to the distance between your vehicle and the vehicle ahead of you or a collision could occur.

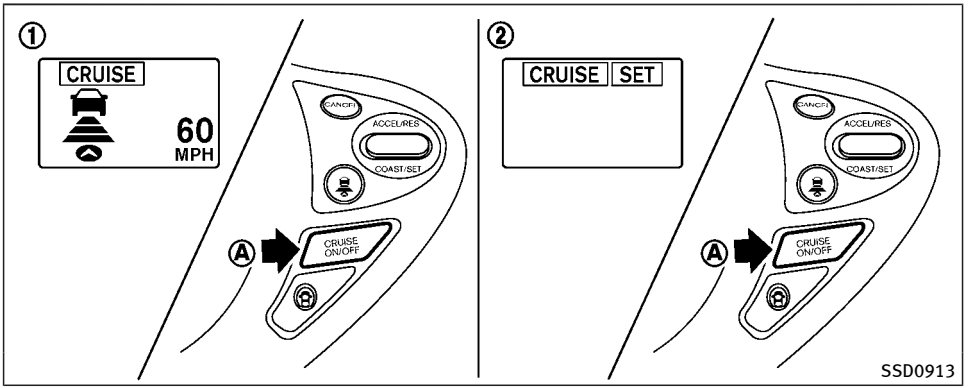

1. Vehicle-to-vehicle distance control mode
2. Conventional (fixed speed) cruise control mode

Push the MAIN switch Ⓐ to choose the cruise control mode between the vehicle-to-vehicle distance control mode ① and the conventional (fixed speed) cruise control mode ②.

To choose the vehicle-to-vehicle distance control mode ①, quickly push and release the MAIN switch Ⓐ. To choose the conventional (fixed speed) cruise control mode ②, push and hold the MAIN switch Ⓐ for longer than approximately 1.5 seconds.

Once a control mode is activated, it cannot be changed to the other cruise control mode. To change the mode, push the MAIN switch once to turn the system off. Then push the MAIN switch again to turn the system back on and select the desired cruise control mode.

Always confirm the setting in the Intelligent Cruise Control system display.

For the vehicle-to-vehicle distance control mode, see the following description. For "Conventional (fixed speed) cruise control mode" (P.5-51).

SELECTING THE VEHICLE-TO-VEHICLE DISTANCE CONTROL MODE

To choose the vehicle-to-vehicle distance control mode ①, quickly push and release the MAIN switch Ⓐ.

VEHICLE-TO-VEHICLE DISTANCE CONTROL MODE

In the vehicle-to-vehicle distance control mode, the Intelligent Cruise Control (ICC) system automatically maintains a selected distance from the vehicle traveling in front of you according to that vehicle's speed (up to the set speed), or at the set speed when the road ahead is clear.

With ICC, the driver can maintain the same speed as other vehicles without the constant need to adjust the set speed as you would with a normal cruise control system.

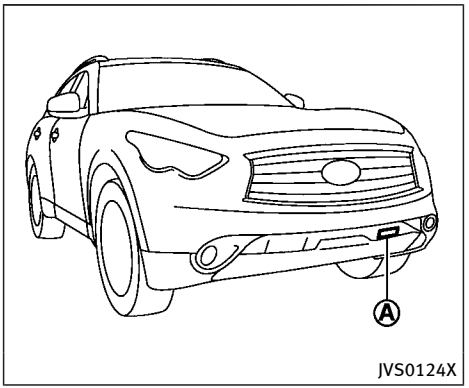

PRECAUTIONS ON VEHICLE-TO-VEHICLE DISTANCE CONTROL MODE

The system is intended to enhance the operation of the vehicle when following a vehicle traveling in the same lane and direction.

If the distance sensor Ⓐ detects a slower moving vehicle ahead, the system will reduce the vehicle speed so that your vehicle follows the vehicle in front at the selected distance.

The system automatically controls the throttle and applies the brakes (up to 25% of vehicle braking power) if necessary.

The detection range of the sensor is approximately 390 ft (120 m) ahead.

WARNING

- **This system is only an aid to assist the driver and is not a collision warning or avoidance device. It is the driver's responsibility to stay alert, drive safely and be in control of the vehicle at all times.**
- **The system is primarily intended for use on straight, dry, open roads with light traffic. It is not advisable to use the system in city traffic or congested areas.**
- **This system will not adapt automatically to road conditions. This system should be used in evenly flowing traffic. Do not use the system on roads with sharp curves, or on icy roads, in heavy rain or in fog.**

The distance sensor will not detect the following objects:

- Stationary and slow moving vehicles
- Pedestrians or objects in the roadway

- Oncoming vehicles in the same lane
- Motorcycles traveling offset in the travel lane

WARNING

- **As there is a performance limit to the distance control function, never rely solely on the Intelligent Cruise Control system. This system does not correct careless, inattentive or absent-minded driving, or overcome poor visibility in rain, fog, or other bad weather. Decelerate the vehicle speed by depressing the brake pedal, depending on the distance to the vehicle ahead and the surrounding circumstances in order to maintain a safe distance between vehicles.**
- **If the vehicle ahead comes to a stop, the vehicle decelerates to a standstill within the limitations of the system. The system will cancel once it judges that the vehicle has come to a standstill and sound a warning chime. To prevent the vehicle from moving, the driver must depress the brake pedal.**
- **The system may not detect the vehicle in front of you in certain road or weather conditions. To avoid accidents, never use the Intelligent Cruise Control system under the following conditions:**
  - **On roads where the traffic is heavy or there are sharp curves**
  - **On slippery road surfaces such as on ice or snow, etc.**
  - **During bad weather (rain, fog, snow, etc.)**

    When the windshield wiper is operated at the low speed (LO) or high speed (HI) position, the Intelligent Cruise Control system is automatically canceled.
  - **When strong light (for example, at sunrise or sunset) is directly shining on the front of the vehicle**
  - **When rain, snow or dirt adhere to the system sensor**
  - **On steep downhill roads (the vehicle may go beyond the set vehicle speed and frequent braking may result in overheating the brakes)**
  - **On repeated uphill and downhill roads**
  - **When traffic conditions make it difficult to keep a proper distance between vehicles because of frequent acceleration or deceleration**
- **Do not use the Intelligent Cruise Control system if you are towing a trailer. The system may not detect a vehicle ahead.**
- **In some road or traffic conditions, a vehicle or object can unexpectedly come into the sensor detection zone and cause automatic braking. You may need to control the distance from other vehicles using the accelerator pedal. Always stay alert and avoid using the ICC system when it is not recommended in this section.**

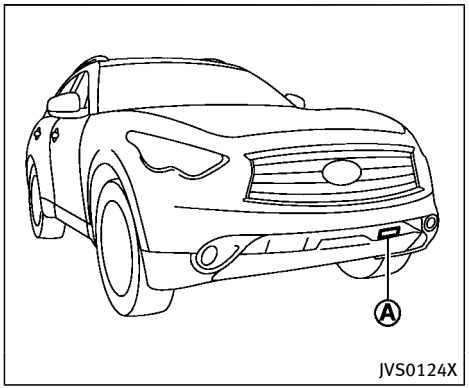

VEHICLE-TO-VEHICLE DISTANCE CONTROL MODE OPERATION

Always pay attention to the operation of the vehicle and be ready to manually control the proper following distance. The vehicle-to-vehicle distance control mode of the Intelligent Cruise Control (ICC) system may not be able to maintain the selected distance between vehicles (following distance) or selected vehicle speed under some circumstances.

The vehicle-to-vehicle distance control mode uses a sensor Ⓐ located on the front of the vehicle to detect vehicles traveling ahead. The sensor generally detects the signals returned from the reflectors on a vehicle ahead. Therefore, if the sensor cannot detect the reflector on the vehicle ahead, the ICC system may not maintain the selected distance.

The following are some conditions in which the sensor cannot detect the signals:

- When the reflector of the vehicle ahead is positioned high on the vehicle (trailer, etc.)
- When the reflector on the vehicle ahead is missing, damaged or covered
- When the reflector of the vehicle ahead is covered with dirt, snow and road spray
- When the snow or road spray from traveling vehicles reduces the sensor's visibility
- When dense exhaust or other smoke (black smoke) from vehicles reduces the sensor's visibility
- When excessively heavy baggage is loaded in the rear seat or the luggage room of your vehicle

The ICC system is designed to automatically check the sensor's operation within the limitation of the system. When the sensor is covered with dirt or is obstructed, the system will automatically be canceled. If the sensor is covered with ice, a transparent or translucent vinyl bag, etc., the ICC system may not detect them. In these instances, the vehicle-to-vehicle distance control mode may not cancel and may not be able to maintain the selected following distance from the vehicle ahead. Be sure to check and clean the sensor regularly.

The vehicle-to-vehicle distance control mode is designed to maintain a selected distance and reduce the speed to match the slower vehicle ahead. The system will decelerate the vehicle as necessary and if the vehicle ahead comes to a stop, the vehicle decelerates to a standstill. However, the ICC system can only apply up to 25% of the vehicles total braking power. This system should only be used when traffic conditions allow vehicle speeds to remain fairly constant or when vehicle speeds change gradually. If a vehicle moves into the traveling lane ahead or if a vehicle traveling ahead rapidly decelerates, the distance between vehicles may become closer because the ICC system cannot decelerate the vehicle quickly en-

ough. If this occurs, the ICC system will sound a warning chime and blink the system display to notify the driver to take necessary action.

The system will cancel and a warning chime will sound if the speed is below approximately 15 MPH (24 km/h) and a vehicle is not detected ahead. The system will also disengage when the vehicle goes above the maximum set speed.

See “Approach warning” (P.5-47).

The following items are controlled in the vehicle-to-vehicle distance control mode:

- When there are no vehicles traveling ahead, the vehicle-to-vehicle distance control mode maintains the speed set by the driver. The set speed range is between approximately 20 and 90 MPH (32 and 144 km/h).
- When there is a vehicle traveling ahead, the vehicle-to-vehicle distance control mode adjusts the speed to maintain the distance, selected by driver, from the vehicle ahead. The adjusting speed range is up to the set speed. If the vehicle ahead comes to a stop, the vehicle decelerates to a standstill within the limitations of the system. The system will cancel once it judges a standstill with a warning chime.
- When the vehicle traveling ahead has moved out from its lane of travel, the vehicle-to-vehicle distance control mode accelerates and maintains vehicle speed up to the set speed.

The ICC system does not control vehicle speed or warn you when you approach stationary and slow moving vehicles. You must pay attention to vehicle operation to maintain proper distance from vehicles ahead when approaching toll gates or traffic congestion.

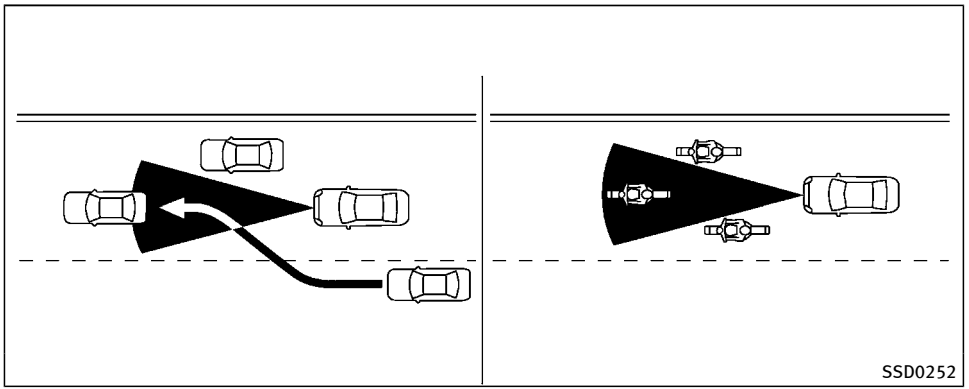

The detection zone of the ICC sensor is limited. A vehicle ahead must be in the detection zone for the vehicle-to-vehicle distance detection mode to maintain the selected distance from the vehicle ahead.

A vehicle ahead may move outside of the detection zone due to its position within the same lane of travel. Motorcycles may not be detected in the same lane ahead if they are traveling offset from the centerline of the lane. A vehicle that is entering the lane ahead may not be detected until the vehicle has completely moved into the lane. **If this occurs, the ICC system may warn you by blinking the system indicator and sounding the chime. The driver may have to manually control the proper distance away from vehicle traveling ahead.**

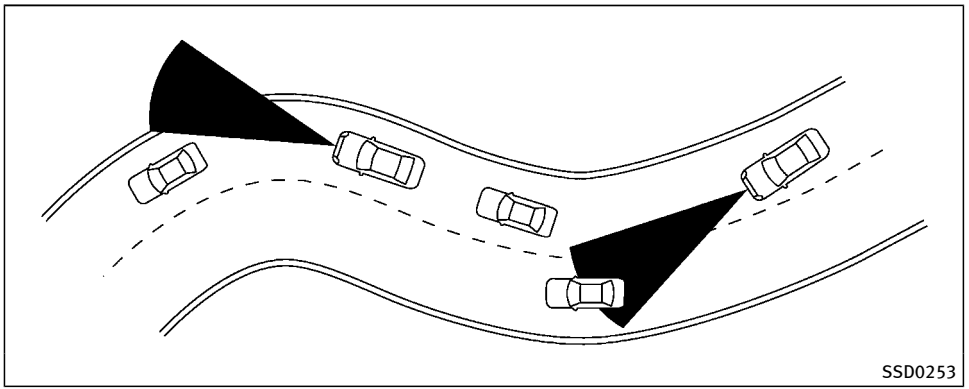

When driving on some roads, such as winding, hilly, curved, narrow roads, or roads which are under construction, the ICC sensor may detect vehicles in a different lane, or may temporarily not detect a vehicle traveling ahead. This may cause the ICC system to decelerate or accelerate the vehicle.

The detection of vehicles may also be affected by vehicle operation (steering maneuver or traveling position in the lane, etc.) or vehicle condition. **If this occurs, the ICC system may warn you by blinking the system indicator and sounding the chime unexpectedly. You will have to manually control the proper distance away from the vehicle traveling ahead.**

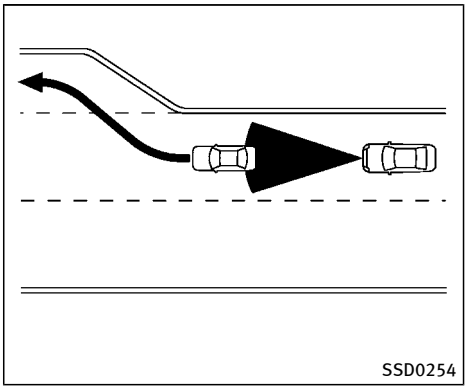

When driving on the freeway at a set speed and approaching a slower traveling vehicle ahead, the ICC will adjust the speed to maintain the distance, selected by the driver, from the vehicle ahead. If the vehicle ahead changes lanes or exits the freeway, the ICC system will accelerate and maintain the speed up to the set speed. Pay attention to the driving operation to maintain control of the vehicle as it accelerates to the set speed.

The vehicle may not maintain the set speed on winding or hilly roads. If this occurs, you will have to manually control the vehicle speed.

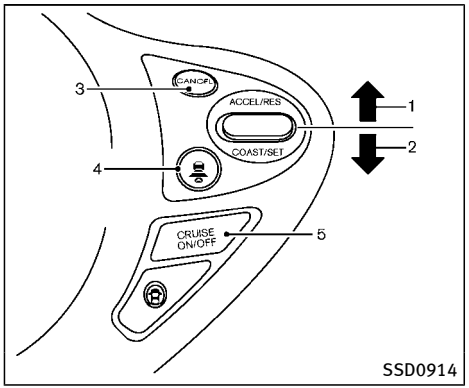

Intelligent cruise control switch

The system is operated by a MAIN switch and four control switches, all mounted on the steering wheel.

1. ACCELERATE/RESUME switch:

   Resumes set speed or increases speed incrementally.

2. COAST/SET switch:

   Sets desired cruise speed, reduces speed incrementally.

3. CANCEL switch:

   Deactivates the system without erasing the set speed.

4. DISTANCE switch:

   Changes the vehicle's following distance:
   - Long
   - Middle
   - Short

5. MAIN (ON·OFF) switch:

   Master switch to activate the system

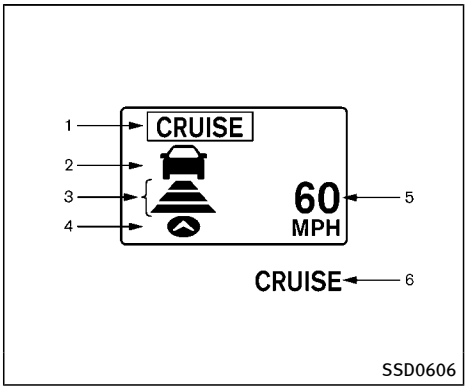

Intelligent cruise control system display and indicators

The display is located between the speedometer and tachometer.

1. MAIN switch indicator:

   Indicates that the MAIN switch is ON.

2. Vehicle ahead detection indicator:

   Indicates whether it detects a vehicle in front of you.

3. Set distance indicator:

   Displays the selected distance between vehicles set with the DISTANCE switch.

4. Indicates your vehicle
5. Set vehicle speed indicator:

   Indicates the set vehicle speed.

   For Canadian models, the speed is displayed in km/h.
6. Intelligent Cruise Control system warning light (orange):

   The light comes on if there is a malfunction in the ICC system.

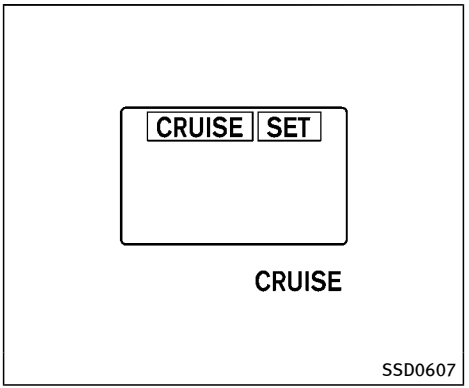

When the ignition switch is pushed to the ON position, the indicators come on as illustrated to check for a burned-out bulb, and it turns off when the engine is started.

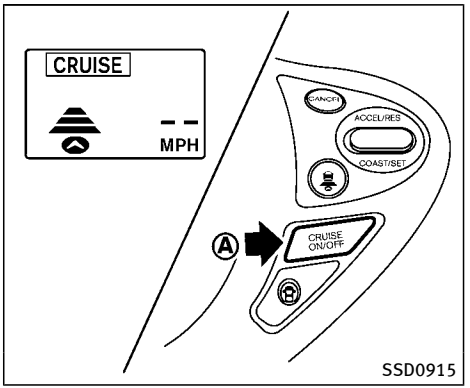

Operating vehicle-to-vehicle distance control mode

To turn on the cruise control, quickly push and release the MAIN switch Ⓐ on. The cruise indicator light, set distance indicator and set vehicle speed indicator come on and in a standby state for setting.

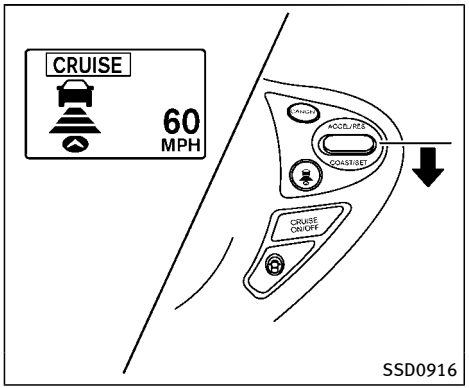

To set cruising speed, accelerate your vehicle to the desired speed, push the COAST/SET switch and release it. (Vehicle ahead detection indicator, set distance indicator and set vehicle speed indicator come on.) Take your foot off the accelerator pedal. Your vehicle will maintain the set speed.

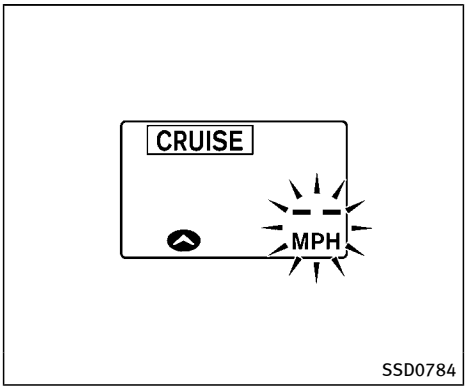

When the COAST/SET switch is pushed under the following conditions, the system cannot be set and the ICC indicators will blink for approximately 2 seconds:

- When traveling below 20 MPH (32 km/h) and the vehicle ahead is not detected
- When the shift lever is not in the D, DS or Manual mode
- When the windshield wipers are operating at low (LO) or high speed (HI). If the vehicle is equipped with a rain-sensing auto wiper, the system may cancel when the wipers are operating at the intermittent (INT) speed.
- When the parking brake is applied
- When the brakes are operated by the driver

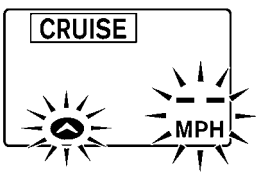

SSD0614

When the COAST/SET switch is pushed under the following conditions, the system cannot be set.

A warning chime will sound and the ICC indicators will blink.

- When the SNOW mode switch is ON (To use the ICC system, turn off the SNOW mode switch, push the MAIN switch to turn off the ICC and reset the ICC switch by pressing the MAIN switch again.)

  For details about the SNOW mode switch, see “Snow mode switch” (P.2-48).
- When the VDC system is off (To use the ICC system, turn on the VDC system. Push the MAIN switch to turn off the ICC system and reset the ICC switch by pushing the MAIN switch again.)

  For details about the VDC system, see “Vehicle Dynamic Control (VDC) system” (P.5-84).
- When ABS or VDC (including the traction control system) is operating
- When driving into a strong light (for example, sunlight)
- When a wheel is slipping (To use the ICC system, make sure the wheels are no longer slipping. Push the MAIN switch to turn off the ICC, and reset the ICC system by pushing the MAIN switch again.)

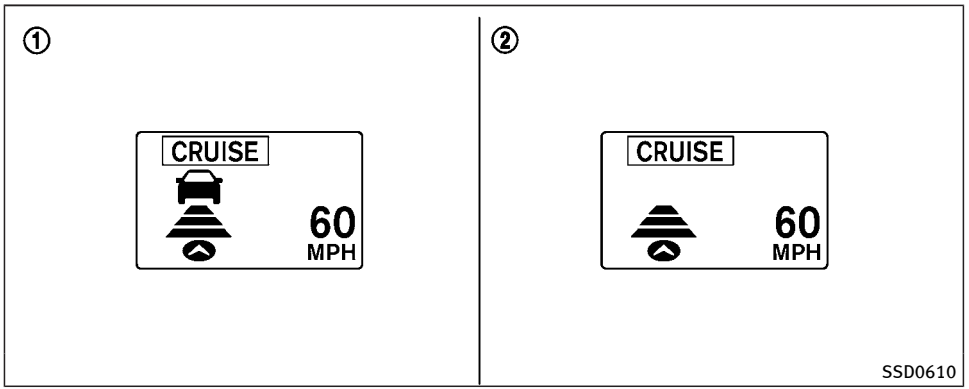

1. System set display with vehicle ahead
2. System set display without vehicle ahead

System operation

WARNING

Normally when controlling the distance to a vehicle ahead, this system automatically accelerates or decelerates your vehicle according to the speed of the vehicle ahead. Depress the accelerator to properly accelerate your vehicle when acceleration is required for a lane change. Depress the brake pedal when deceleration is required to maintain a safe distance to the vehicle ahead due to its sudden braking or if a vehicle cuts in. Always stay alert when using the ICC system.

The driver sets the desired vehicle speed based on the road conditions. The ICC system maintains the set vehicle speed, similar to standard cruise control, as long as no vehicle is detected in the lane ahead.

The ICC system displays the set speed.

Vehicle detected ahead:

When a vehicle is detected in the lane ahead, the ICC system decelerates the vehicle by controlling the throttle and applying the brakes to match the speed of a slower vehicle ahead. The system then controls the vehicle speed based on the speed of the vehicle ahead to maintain the driver selected distance.

The stoplights of the vehicle come on and the brake pedal depresses when braking is performed by the ICC system.

When the brake operates, a noise may be heard. This is not a malfunction.

When a vehicle ahead is detected, the vehicle ahead detection indicator comes on. The ICC system will also display the set speed and selected distance.

Vehicle ahead not detected:

When a vehicle is no longer detected ahead, the ICC system gradually accelerates your vehicle to resume the previously set vehicle speed. The ICC system then maintains the set speed.

When a vehicle is no longer detected the vehicle ahead detection indicator turns off.

If a vehicle ahead appears during acceleration to the set vehicle speed or any time

the ICC system is in operation, the system controls the distance to that vehicle.

When a vehicle is no longer detected under approximately 15 MPH (24 km/h), the system will be canceled.

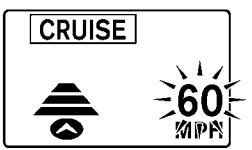

SSD0611

When passing another vehicle, the set speed indicator will flash when the vehicle speed exceeds the set speed. The vehicle detect indicator will turn off when the area ahead of the vehicle is open. When the pedal is released, the vehicle will return to the previously set speed.

Even though your vehicle speed is set in the ICC system, you can depress the accelerator pedal when it is necessary to accelerate your vehicle rapidly.

How to change the set vehicle speed

To cancel the preset speed, use any of these methods:

- Push the CANCEL switch. The set vehicle speed indicator will go out.
- Tap the brake pedal. The set vehicle speed indicator will go out.
- Turn the MAIN switch off. The ICC indicators will go out.

To reset at a faster cruising speed, use one of the following methods:

- Depress the accelerator pedal. When the vehicle attains the desired speed, push and release the COAST/SET switch.
- Push and hold the ACCELERATE/RESUME switch. The set vehicle speed will increase by approximately 5 MPH (5 km/h for Canada).
- Push, then quickly release the ACCELERATE/RESUME switch. Each time you do this, the set speed will increase by approximately 1 MPH (1 km/h for Canada).

To reset at a slower cruising speed, use one of the following methods:

- Lightly tap the brake pedal. When the vehicle attains the desired speed, push the COAST/SET switch and release it.
- Push and hold the COAST/SET switch. The set vehicle speed will decrease by approximately 5 MPH (5 km/h for Canada).
- Push, then quickly release the COAST/SET switch. Each time you do this, the set speed will decrease by approximately 1 MPH (1 km/h for Canada).

To resume the preset speed, push and release the ACCELERATE/RESUME switch. The vehicle will resume the last set cruising speed when the vehicle speed is over 20 MPH (32 km/h).

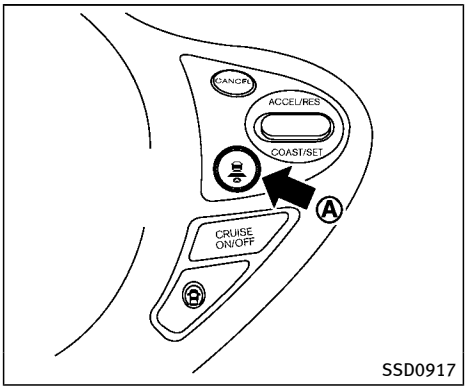

How to change the set distance to the vehicle ahead

The distance to the vehicle ahead can be selected at any time depending on the traffic conditions.

Each time the DISTANCE switch Ⓐ is pushed, the set distance will change to long, middle, short and back to long again in that sequence.

Distance	Display	Approximate distance at 60 MPH (100 km/h) [ft (m)]
Long	CRUISE 60 MPH	200 (60)
Middle	CRUISE 60 MPH	150 (45)
Short	CRUISE 60 MPH	100 (30)

SSD0613C

- The distance to the vehicle ahead will change according to the vehicle speed. The higher the vehicle speed, the longer the distance.
- If the engine is stopped, the set distance becomes “long”. (Each time the engine is started, the initial setting becomes “long”.)

Approach warning

If your vehicle comes closer to the vehicle ahead due to rapid deceleration of that vehicle or if another vehicle cuts in, the system warns the driver with the chime and ICC system display. Decelerate by depressing the brake pedal to maintain a safe vehicle distance if:

- The chime sounds.
- The vehicle ahead detection and set distance indicator blink.

The warning chime may not sound in some cases when there is a short distance between vehicles. Some examples are:

- When the vehicles are traveling at the same speed and the distance between vehicles is not changing
- When the vehicle ahead is traveling faster and the distance between vehicles is increasing
- When a vehicle cuts in near your vehicle

The warning chime will not sound when:

- the vehicle approaches other vehicles that are parked or moving slowly.
- the accelerator pedal is depressed, overriding the system.

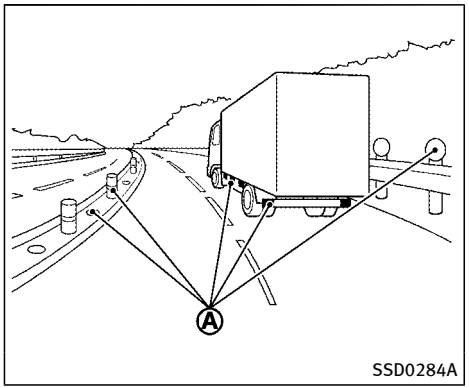

NOTE:

The approach warning chime may sound and the system display may blink when the ICC sensor detects some reflectors Ⓐ which are fitted on vehicles in other lanes or on the side of the road. This may cause the ICC system to decelerate or accelerate the vehicle. The ICC sensor may detect these reflectors when the vehicle is driven on winding roads, hilly roads or when entering or exiting a curve. The ICC sensor may also detect reflectors on narrow roads or in road construction zones. In these cases you will have to manually control the proper distance ahead of your vehicle.

Also, the sensor sensitivity can be affected by vehicle operation (steering maneuver or driving position in the lane) or traffic or vehicle condition (for example, if a vehicle is being driven with some damage).

Automatic cancellation

A chime sounds under the following conditions and the control is automatically canceled.

- When the vehicle ahead is not detected and your vehicle is traveling below the speed of 15 MPH (24 km/h)
- When the system judges the vehicle is at standstill
- When the shift lever is not in the D, DS or Manual mode
- When the windshield wipers are operating at low (LO) or high speed (HI). If the vehicle is equipped with a rain sensing auto-wiper, the system may cancel when the wipers are set to intermittent (INT).
- When the parking brake is applied
- When the SNOW mode switch is turned ON
- When the VDC system is turned off
- When ABS or VDC (including the traction control system) operates
- When driving into a strong light (for example, sunlight)
- When distance measurement becomes impaired due to adhesion of dirt or obstruction to the sensor
- When a wheel slips

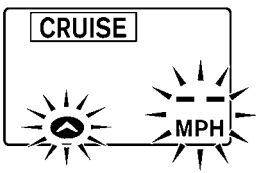

SSD0614

Warning light and display

Condition A:

Under the following conditions, the Intelligent Cruise Control system is automatically canceled. The chime will sound and the system will not be able to be set.

- When the VDC system is turned off
- When the VDC or ABS (including the traction control system) operates
- When a tire slips
- When the SNOW mode switch is turned ON
- When driving into a strong light (for example, sunlight)

Action to take:

When the conditions listed above are no longer present, turn the system off using the Intelligent Cruise Control MAIN Switch. Turn the ICC system back on to use the system.

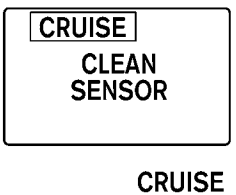

SSD0615

Condition B:

When the sensor window is dirty, making it impossible to detect a vehicle ahead, the ICC system is automatically canceled.

The chime sounds and the system warning light (orange) will come on and the “CLEAN SENSOR” indicator will appear.

Action to take:

If the warning light comes on, park the vehicle in a safe place, turn the engine off. Clean the sensor window with a soft cloth and then perform the settings again.

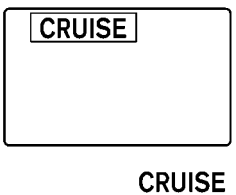

SSD0621

Condition C:

When the ICC system is not operating properly, the chime sounds and the system warning light (orange) will come on.

Action to take:

If the warning light comes on, park the vehicle in a safe place. Turn the engine off, restart the engine, resume driving and set the ICC system again.

If it is not possible to set the system or the indicator stays on, it may indicate that the system is malfunctioning. Although the vehicle is still driveable under normal conditions, have the vehicle checked at an INFINITI retailer.

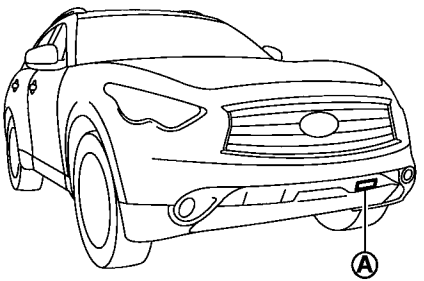

JVS0124X

Sensor maintenance

The sensor for the ICC system Ⓐ is located below the front bumper.

To keep the ICC system operating properly, be sure to observe the following:

- Always keep the sensor clean. Wipe with a soft cloth carefully so as not to damage the sensor.
- Do not strike or damage the areas around the sensor. Do not touch or remove the screw located on the sensor. Doing so could cause failure or malfunction. If the sensor is damaged due to an accident, contact an

INFINITI retailer.

- Do not attach a sticker (including transparent material) or install an accessory near the sensor. This could cause failure or malfunction.

CONVENTIONAL (fixed speed) CRUISE CONTROL MODE

This mode allows driving at a speed between 25 to 90 MPH (40 to 144 km/h) without keeping your foot on the accelerator pedal.

WARNING

- **In the conventional (fixed speed) cruise control mode, a warning chime does not sound to warn you if you are too close to the vehicle ahead, as neither the presence of the vehicle ahead nor the vehicle-to-vehicle distance is detected.**
- **Pay special attention to the distance between your vehicle and the vehicle ahead of you or a collision could occur.**
- **Always confirm the setting in the Intelligent Cruise Control system display.**
- **Do not use the conventional (fixed speed) cruise control mode when driving under the following conditions:**
  - **— when it is not possible to keep the vehicle at a set speed**
  - **— in heavy traffic or in traffic that varies in speed**
  - **— on winding or hilly roads**
  - **— on slippery roads (rain, snow, ice, etc.)**
  - **— in very windy areas**
- **Doing so could cause a loss of vehicle control and result in an accident.**

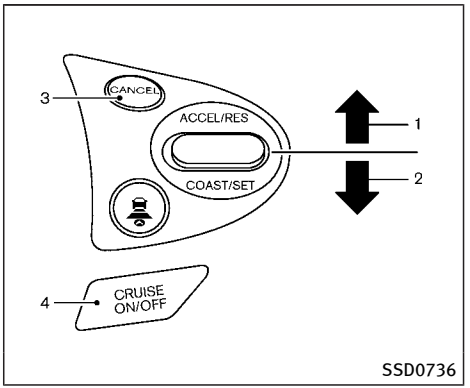

Conventional (fixed speed) cruise control switch

1. ACCELERATE/RESUME switch:

   Resumes set speed or increases speed incrementally.
2. COAST/SET switch:

   Sets the desired cruise speed, reduces speed incrementally.
3. CANCEL switch:

   Deactivates the system without erasing the set speed.
4. MAIN (ON·OFF) switch:

   Master switch to activate the system.

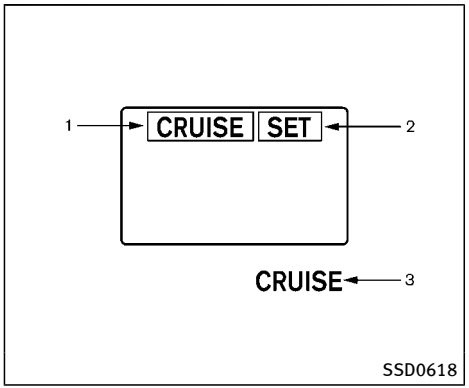

Conventional (fixed speed) cruise control mode display and indicators

The display is located between the speedometer and tachometer.

1. MAIN switch indicator:

   Indicates that the MAIN switch is ON.

2. Cruise set switch indicator:

   Displays while the vehicle speed is controlled by the conventional (fixed speed) cruise control mode of the ICC system.

3. Cruise system warning light:

   Comes on if there is a malfunction in the cruise control system.

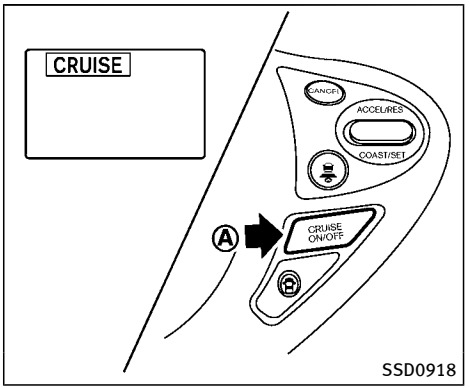

Operating conventional (fixed speed) cruise control mode

To turn on the conventional (fixed speed) cruise control mode, push and hold the MAIN switch Ⓐ for longer than about 1.5 seconds.

When pushing the MAIN switch on, the Intelligent Cruise Control system display and the CRUISE indicator are displayed on the vehicle information display. After you hold the MAIN switch on for longer than about 1.5 seconds, the Intelligent Cruise Control system display goes out. The CRUISE indicator stays lit. You can now

set your desired cruising speed. Pushing the MAIN switch again will turn the system completely off.

When the ignition switch is pushed to the OFF position, the system is also automatically turned off. To use the Intelligent Cruise Control again, quickly push and release the MAIN switch (vehicle-to-vehicle distance control mode) or push and hold it (conventional cruise control mode) again to turn it on.

When the Distance Control Assist (DCA) system is on, the conventional (fixed speed) cruise control mode cannot be turned on even though the MAIN switch is pushed and held.

To turn on the conventional (fixed speed) cruise control mode, turn off the DCA system. See “Distance Control Assist (DCA) system” (P.5-55).

CAUTION

To avoid accidentally engaging cruise control, make sure to turn the ON/OFF switch off when not using the Intelligent Cruise Control.

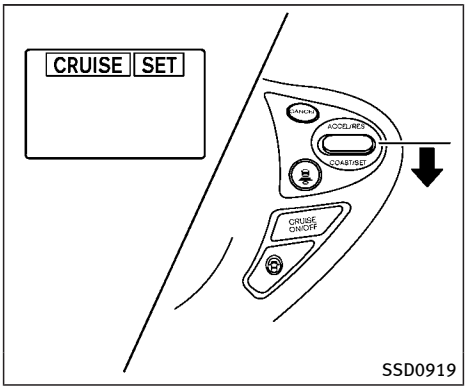

To set cruising speed, accelerate your vehicle to the desired speed, push the COAST/SET switch and release it. (The SET indicator will come on in the display.) Take your foot off the accelerator pedal. Your vehicle will maintain the set speed.

- **To pass another vehicle,** depress the accelerator pedal. When you release the pedal, the vehicle will return to the previously set speed.
- The vehicle may not maintain the set speed when going up or down steep hills. If this happens, manually maintain vehicle speed.

To cancel the preset speed, use any of the following methods:

1. Push the CANCEL button. The SET indicator will go out.
2. Tap the brake pedal. The SET indicator will go out.
3. Turn the MAIN switch off. Both the CRUISE indicator and SET indicator will go out.

To reset at a faster cruising speed, use one of the following three methods:

1. Depress the accelerator pedal. When the vehicle attains the desired speed, push and release the COAST/SET switch.
2. Push and hold the ACCELERATE/RESUME set switch. When the vehicle attains the speed you desire, release the switch.
3. Push, then quickly release the ACCELERATE/RESUME switch. Each time you do this, the set speed will increase by about 1 MPH (1.6 km/h).

To reset at a slower cruising speed, use one of the following three methods:

1. Lightly tap the brake pedal. When the vehicle attains the desired speed, push the COAST/SET switch and release it.

2. Push and hold the COAST/SET switch. Release the switch when the vehicle slows down to the desired speed.
3. Push, then quickly release the COAST/SET switch. Each time you do this, the set speed will decrease by about 1 MPH (1.6 km/h).

To resume the preset speed, push and release the ACCELERATE/RESUME switch. The vehicle will resume the last set cruising speed when the vehicle speed is over 25 MPH (40 km/h).

Automatic cancellation

Under the following condition, a chime will sound and the system control is automatically canceled.

- When the vehicle slows down more than 8 MPH (13 km/h) below the set speed
- When the vehicle speed falls below approximately 20 MPH (32 km/h)
- When the shift lever is not in the D, DS or Manual mode
- When the parking brake is applied
- When the VDC (including the traction control system) operates
- When a wheel slips

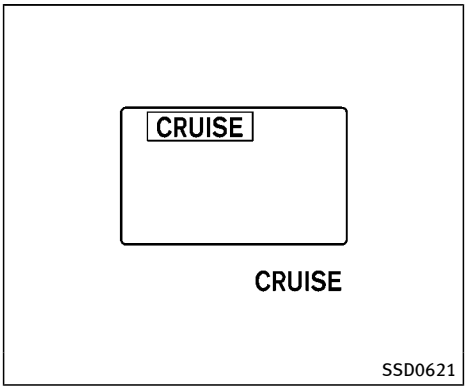

Warning light

When the system is not operating properly, the chime sounds and the system warning light (orange) will come on.

Action to take:

If the warning light comes on, park the vehicle in a safe place. Turn the engine off, restart the engine, resume driving and then perform the setting again.

If it is not possible to set or the indicator stays on, it may indicate that the system is malfunctioning. Although the vehicle is still driveable under normal conditions, have the vehicle checked at an INFINITI retailer.

PREVIEW FUNCTION (for Intelligent Cruise Control system equipped models)

The ICC system with the preview function identifies the need to apply emergency braking by sensing the vehicle ahead in the same lane and the distance to the vehicle ahead and relative speed from it, it applies the brake pre-pressure before the driver depresses the brake pedal and helps improve brake response by reducing pedal free play.

For more details, see “Brake assist” (P.5-80).

DISTANCE CONTROL ASSIST (DCA) SYSTEM (if so equipped)

The Distance Control Assist (DCA) system brakes and moves the accelerator pedal upward according to the distance from and the relative speed of the vehicle ahead to help assist the driver to maintain a following distance.

WARNING

- **Always drive carefully and attentively when using the Distance Control Assist system. Read and understand the Owner's Manual thoroughly before using the DCA system. To avoid serious injury or death, do not rely on the system to prevent accidents or to control the vehicle's speed in emergency situations. Do not use the Distance Control Assist system except in appropriate road and traffic conditions.**
- **If the vehicle ahead comes to a stop, the vehicle decelerates to a standstill within the limitations of the system. The system will cancel once it judges that the vehicle has come to a standstill with a warning chime. To prevent the vehicle from moving, the driver must depress the brake pedal.**
- **The DCA system will not apply brake control while the driver's foot is on the accelerator pedal.**

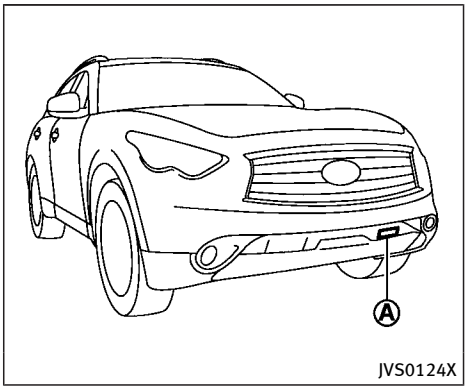

PRECAUTIONS ON DISTANCE CONTROL ASSIST SYSTEM

The system is intended to assist the driver to keep a following distance from the vehicle ahead traveling in the same lane and direction.

If the distance sensor Ⓐ detects a slower moving vehicle ahead, the system will reduce the vehicle speed to help assist the driver to maintain a following distance.

The system automatically controls the throttle and applies the brakes (up to 25% of vehicle braking power) if necessary.

The detection range of the sensor is approximately 390 ft (120 m) ahead.

WARNING

- **This system is only an aid to assist the driver and is not a collision warning or avoidance device. It is the driver's responsibility to stay alert, drive safely and be in control of the vehicle at all times.**
- **This system will not adapt automatically to road conditions. Do not use the system on roads with sharp curves, or on icy roads, in heavy rain or in fog.**

The distance sensor will not detect the following objects:

- Stationary and slow moving vehicles
- Pedestrians or objects in the roadway
- Oncoming vehicles in the same lane
- Motorcycles traveling offset in the travel lane

WARNING

- **As there is a performance limit to the distance control function, never rely solely on the Distance Control Assist system. This system does not correct careless, inattentive or absent-minded driving, or overcome poor visibility in rain, fog, or other bad weather. Decelerate the vehicle speed by depressing the brake pedal, depending on the distance to the vehicle ahead and the surrounding circumstances in order to maintain a safe distance between vehicles.**
- **The system may not detect the vehicle in front of you in certain road or weather conditions. To avoid accidents, never use the Distance Control Assist system under the following conditions:**
  - **— On roads with sharp curves**
  - **— On slippery road surfaces such as on ice or snow, etc.**
  - **— During bad weather (rain, fog, snow, etc.)**
  - **— When strong light (for example, at sunrise or sunset) is directly shining on the front of the vehicle**
  - **— When rain, snow or dirt adhere to the system sensor**
  - **— On steep downhill roads (frequent braking may result in overheating the brakes)**
  - **— On repeated uphill and downhill roads**
- **Do not use the Distance Control Assist system if you are towing a trailer. The system may not detect a vehicle ahead.**
- **In some road or traffic conditions, a vehicle or object can unexpectedly come into the sensor detection zone and cause automatic braking. You may need to control the distance from other vehicles using the accelerator pedal. Always stay alert and avoid using the DCA system when it is not recommended in this section.**

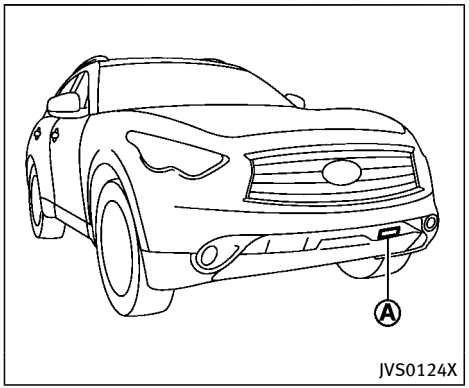

DISTANCE CONTROL ASSIST OPERATION

Always pay attention to the operation of the vehicle and be ready to manually decelerate to maintain the proper following distance. The Distance Control Assist (DCA) system may not be able to decelerate the vehicle under some circumstances.

The DCA system uses a sensor Ⓐ located on the front of the vehicle to detect vehicles traveling ahead. The sensor generally detects the signals returned from the reflectors on a vehicle ahead. Therefore, if the sensor cannot detect the reflector on the vehicle ahead, the DCA system may not operate.

The following are some conditions in which the sensor cannot detect the signals:

- When the reflector of the vehicle ahead is positioned high on the vehicle (trailer, etc.)
- When the reflector on the vehicle ahead is missing, damaged or covered
- When the reflector of the vehicle ahead is covered with dirt, snow and road spray
- When the snow or road spray from traveling vehicles reduces the sensor's visibility
- When dense exhaust or other smoke (black smoke) from vehicles reduces the sensor's visibility
- When excessively heavy baggage is loaded in the rear seat or the luggage room of your vehicle

The DCA system is designed to automatically check the sensor's operation. When the sensor is covered with dirt or is obstructed, the system will automatically be canceled. If the sensor is covered with ice, a transparent or translucent vinyl bag, etc., the DCA system may not detect them. In these instances, the Distance Control Assist (DCA) system may not be able to decelerate the vehicle properly. Be sure to check and clean the sensor regularly.

The DCA system is designed to help assist the driver to maintain a following distance from the vehicle ahead. The system will decelerate as necessary and if the vehicle ahead comes to a stop, the vehicle decelerates to a standstill. However, the DCA system can only apply up to 25% of the vehicles total braking power. If a vehicle moves into the traveling lane ahead or if a vehicle traveling ahead rapidly decelerates, the distance between vehicles may become closer because the DCA system cannot decelerate the vehicle quickly enough. If this occurs, the DCA system will sound a warning chime and blink the system display to notify the driver to take necessary action.

See "Approach warning" (P.5-47).

This system only brakes and moves the accelerator pedal upward to help assist the driver to maintain a following distance from the vehicle ahead. Acceleration should be operated by the driver.

The DCA system does not control vehicle speed or warn you when you approach

stationary and slow moving vehicles. You must pay attention to vehicle operation to maintain proper distance from vehicles ahead.

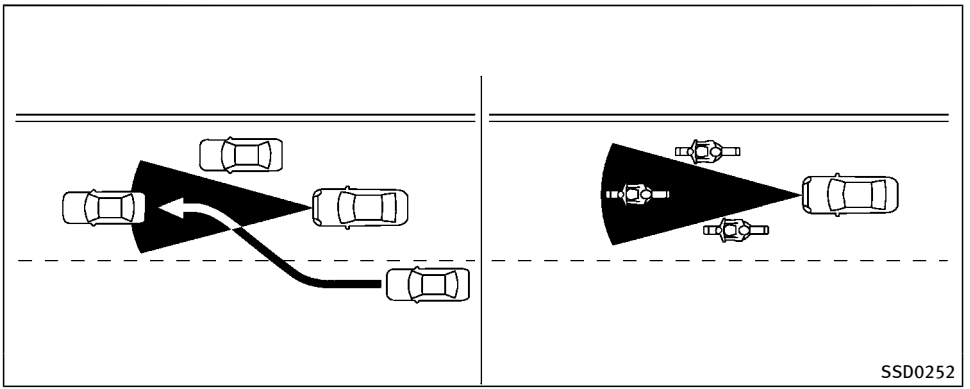

The detection zone of the sensor is limited. A vehicle ahead must be in the detection zone for the system to operate.

A vehicle ahead may move outside of the detection zone due to its position within the same lane of travel. Motorcycles may not be detected in the same lane ahead if they are traveling offset from the centerline of the lane. A vehicle that is entering the lane ahead may not be detected until the vehicle has completely moved into the lane. **If this occurs, the system may warn you by blinking the system indicator and sounding the chime. The driver may have to manually control the proper distance away from vehicle traveling ahead.**

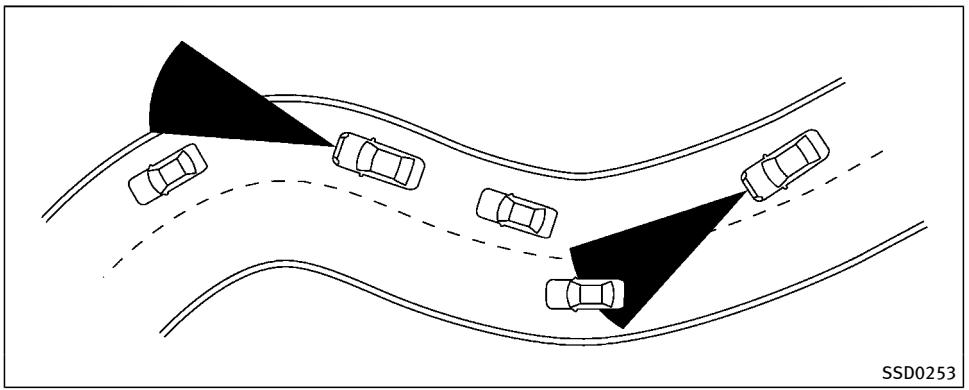

When driving on some roads, such as winding, hilly, curved, narrow roads, or roads which are under construction, the sensor may detect vehicles in a different lane, or may temporarily not detect a vehicle traveling ahead. This may cause the system to work inappropriately.

The detection of vehicles may also be affected by vehicle operation (steering maneuver or traveling position in the lane, etc.) or vehicle condition. **If this occurs, the system may warn you by blinking the system indicator and sounding the chime unexpectedly. You will have to manually control the proper distance away from the vehicle traveling ahead.**

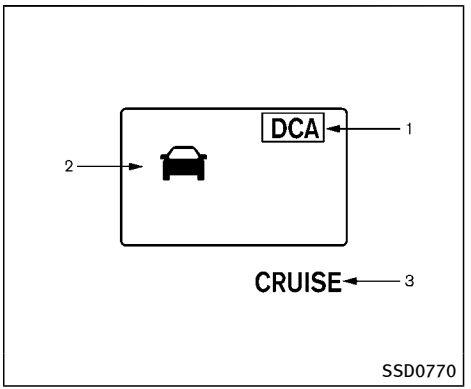

Distance Control Assist system display and indicators

The display is located between the speedometer and tachometer.

1. Distance Control Assist (DCA) system switch indicator:

   Indicates that the dynamic driver assistance switch is ON.

2. Vehicle ahead detection indicator:

   Indicates whether it detects a vehicle in front of you.

3. Distance Control Assist system warning light (orange):

The light comes on if there is a malfunction in the DCA system.

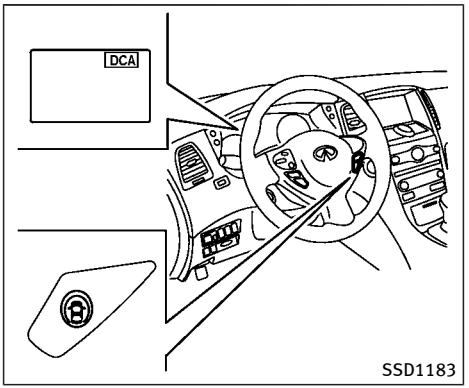

Operating Distance Control Assist (DCA) system

To turn on the DCA system, push the dynamic driver assistance switch on the steering wheel after starting the engine. The Distance Control Assist (DCA) system switch indicator light in the vehicle information display will illuminate. Push the dynamic driver assistance switch again to turn off the DCA system. The Distance Control Assist (DCA) system switch indicator light will turn off.

The system will start to operate after the vehicle speed becomes above approximately 3 MPH (5 km/h).

WARNING

When the DCA system is not necessary, be sure to turn off the dynamic driver assistance switch. Using the system when it is not necessary may result in an accident.

The dynamic driver assistance switch is used for both the LDP and DCA system. When the dynamic driver assistance switch is pushed, the LDP system will also turn on or off simultaneously. The DCA system can be individually set to on or off on the display. If the system is set to off, the system will not turn on even if the dynamic driver assistance switch is pushed to on. To set the system to on or off on the display, see “Setting DCA system to ON/OFF” (P.5-61).

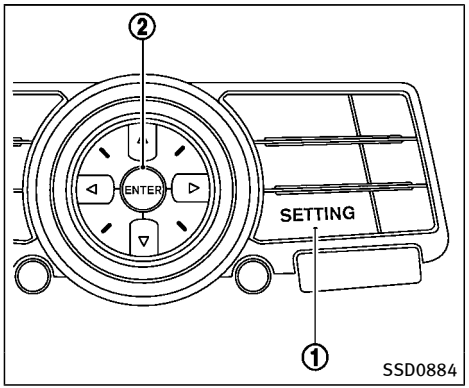

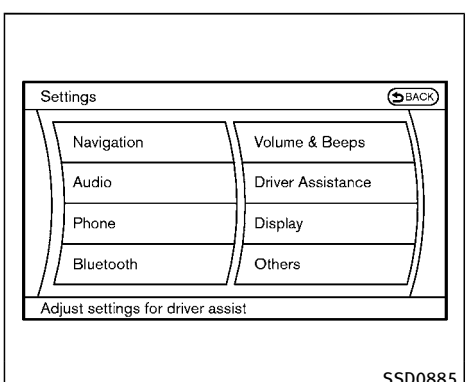

Setting DCA system to ON/OFF:

1. Push the SETTING (1) button and highlight the “Driver Assistance” key on the display using the INFINITI controller. Then push the ENTER (2) button.
2. Highlight the “Dynamic Assistance settings” key, and push the ENTER (2) button.

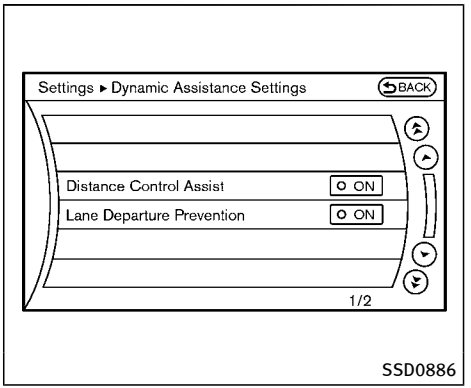

3. To set the DCA system to on or off, highlight the “Distance Control Assist” key, select ON or OFF and push the ENTER (2) button.

If both the LDP and DCA systems are set to OFF on the display, when the dynamic driver assistance switch is pushed, the LDW indicator light and the Distance Control Assist (DCA) system switch indicator light will blink for approximately 2 seconds. See “Lane Departure Warning (LDW) system/Lane Departure Prevention (LDP) system” (P.5-21).

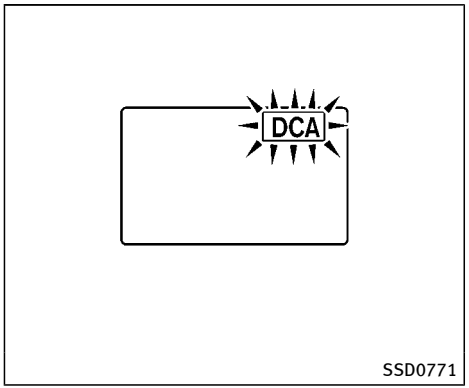

Under the following conditions, the Distance Control Assist system will not operate and the Distance Control Assist (DCA) system switch indicator light will blink:

- When the SNOW mode switch is ON (To use the DCA system, turn off the SNOW mode switch, then turn on the dynamic driver assistance switch.)

  For details about the SNOW mode switch, see “Snow mode switch” (P.2-48).
- When the VDC system is off (To use the DCA system, turn on the VDC, then push the dynamic driver assistance switch.)

  For details about the VDC system, see “Vehicle Dynamic Control (VDC) system” (P.5-84).
- When ABS or VDC (including the traction control system) is operating
- When driving into a strong light (for example, sunlight)

When the Conventional (fixed speed) cruise control mode is operating, the DCA system will not operate. (To use the DCA system, turn the Conventional (fixed speed) cruise control mode off, then push the dynamic driver assistance switch.)

For details about the Conventional (fixed speed) cruise control mode, see “Intelligent Cruise Control (ICC) system (FULL SPEED RANGE)” (P.5-32).

When the engine is turned off, the system is automatically turned off.

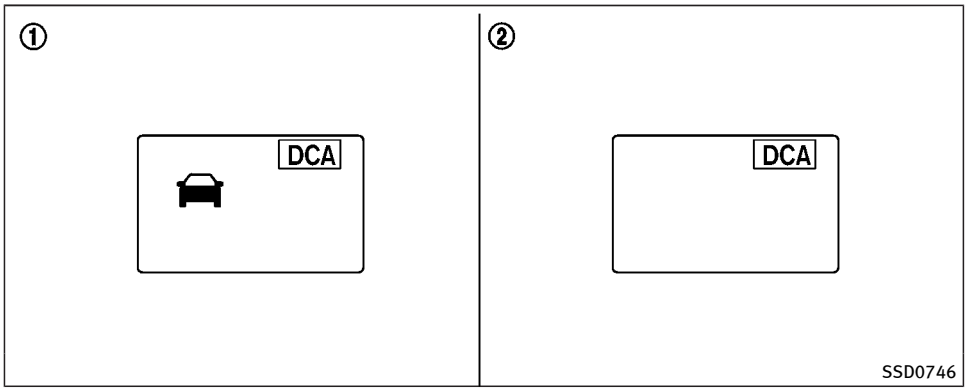

1. System set display with vehicle ahead
2. System set display without vehicle ahead

System operation

WARNING

The Distance Control Assist system automatically decelerates your vehicle to help assist the driver to maintain a following distance from the vehicle ahead. Manually brake when deceleration is required to maintain a safe distance upon sudden braking by the vehicle ahead or when a vehicle suddenly appears in front of you. Always stay alert when using the DCA system.

The Distance Control Assist (DCA) system helps assist the driver to keep a following distance to the vehicle ahead by braking and moving the accelerator pedal upward in the normal driving condition.

When a vehicle is detected ahead:

The vehicle ahead detection indicator comes on.

When vehicle approaches a vehicle ahead:

- If the driver's foot is not on the accelerator pedal, the system activates the brakes to decelerate smoothly as necessary. If the vehicle ahead comes to a stop, the vehicle decelerates to a standstill within the limitations of the system.
- If the driver's foot is on the accelerator pedal, the system moves the accelerator pedal upward to assist the driver to release the accelerator pedal.

When brake operation by driver is required:

The system alerts the driver by a warning chime and blinking the vehicle ahead detection indicator. If the driver's foot is on the accelerator pedal after the warning, the system moves the accelerator pedal upward to assist the driver to switch to the brake pedal.

The stoplights of the vehicle come on and the brake pedal depresses when braking is performed by the DCA system.

When the brake operates, a noise may be heard. This is not a malfunction.

WARNING

- **When the vehicle ahead detection indicator light is not illuminated, system will not control or warn the driver.**
- **Never place your foot under the brake pedal. Your foot may be caught when the system controls the brake.**
- **Depending on the position of the accelerator pedal, the system may not be able to assist the driver to release the accelerator pedal appropriately.**
- **If the vehicle ahead comes to a standstill, the vehicle decelerates to a standstill within the limitations of the system. The system will release brake control with a warning chime once it judges the vehicle is at a standstill. To prevent the vehicle from moving, the driver must depress the brake pedal. (The system will resume control automatically once the system reaches 3 MPH (5 km/h).)**

Overriding the system:

The following driver's operation overrides the system operation.

- When the driver depresses the accelerator pedal even further while the system is moving the accelerator pedal upward, the DCA system control of the accelerator pedal is canceled.
- When the driver's foot is on the accelerator pedal, the brake control by the system is not operated.
- When the driver's foot is on the brake pedal, neither the brake control nor the alert by the system operates.
- When the Intelligent Cruise Control system is set, the DCA system will be cancelled.

Approach warning

If your vehicle comes closer to the vehicle ahead due to rapid deceleration of that vehicle or if another vehicle cuts in, the system warns the driver with the chime and DCA system display. Decelerate by depressing the brake pedal to maintain a safe vehicle distance if:

- The chime sounds.
- The vehicle ahead detection indicator blinks.

The warning chime may not sound in some cases when there is a short distance between vehicles. Some examples are:

- When the vehicles are traveling at the same speed and the distance between vehicles is not changing
- When the vehicle ahead is traveling faster and the distance between vehicles is increasing
- When a vehicle cuts in near your vehicle

The warning chime will not sound when your vehicle approaches vehicles that are parked or moving slowly.

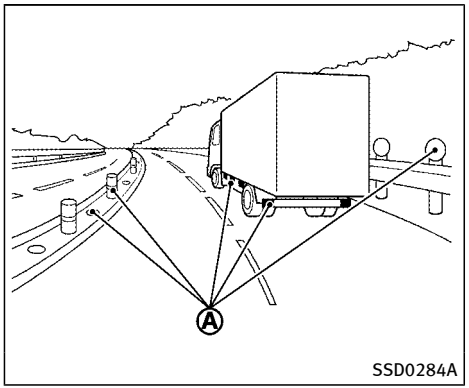

SSD0284A

NOTE:

The approach warning chime may sound and the system display may blink when the sensor detects some reflectors Ⓐ which are fitted on vehicles in other lanes or on the side of the road. This may cause the DCA system to operate inappropriately. The sensor may detect these reflectors when the vehicle is driven on winding roads, hilly roads or when entering or exiting a curve. The sensor may also detect reflectors on narrow roads or in road construction zones. In these cases you will have to manually control the proper distance ahead of your vehicle.

Also, the sensor sensitivity can be affected by vehicle operation (steering maneuver or driving position in the lane) or traffic or vehicle condition (for example, if a vehicle is being driven with some damage).

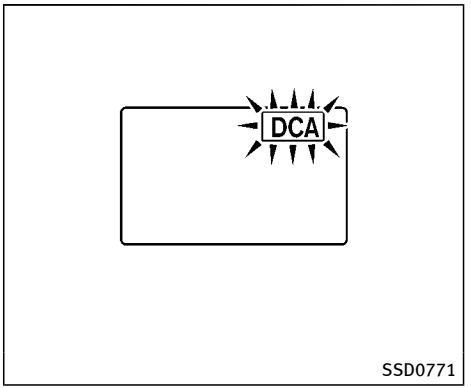

SSD0771

Automatic cancellation

Condition A:

Under the following conditions, the Distance Control Assist system is automatically canceled. The chime will sound and the Distance Control Assist (DCA) system switch indicator light will blink. The system will not be able to be set.

- When the VDC system is turned off
- When the VDC or ABS (including the traction control system) operates
- When the SNOW mode switch is turned ON

- When driving into a strong light (for example, sunlight)

Action to take:

When the conditions listed above are no longer present, turn the system off with the dynamic driver assistance switch. Turn the DCA system back on to use the system.

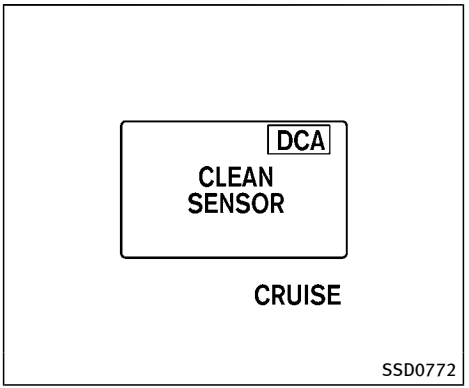

Condition B:

When the sensor window is dirty, making it impossible to detect a vehicle ahead, the DCA system is automatically canceled.

The chime sounds and the system warning light (orange) will come on and the “CLEAN SENSOR” indicator will appear.

Action to take:

If the warning light comes on, park the vehicle in a safe place, turn the engine off. Clean the sensor window with a soft cloth and then perform the settings again.

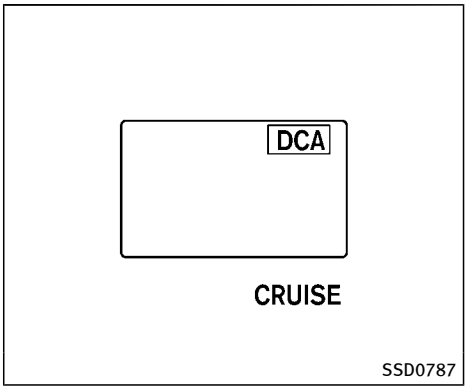

Condition C:

When the DCA system is not operating properly, the chime sounds and the system warning light (“CRUISE” orange) will come on.

Action to take:

If the warning light comes on, park the vehicle in a safe place. Turn the engine off, restart the engine, and turn on the DCA system again.

If it is not possible to set the system or the indicator stays on, it may indicate that the system is malfunctioning. Although the vehicle is still driveable under normal

conditions, have the vehicle checked at an INFINITI retailer.

Sensor maintenance

How to handle the sensor:

The sensor for the DCA system is common with Intelligent Cruise Control and is located below the front bumper.

To handle the sensor, see “Intelligent Cruise Control (ICC) system (FULL SPEED RANGE)” (P.5-32).

FORWARD COLLISION WARNING (FCW) SYSTEM (if so equipped)

The Forward Collision Warning (FCW) system will warn the driver by a warning light and chime when your vehicle is getting close to the vehicle ahead in the traveling lane.

The FCW system will function when your vehicle is driven at speeds of approximately 10 MPH (15 km/h) and above.

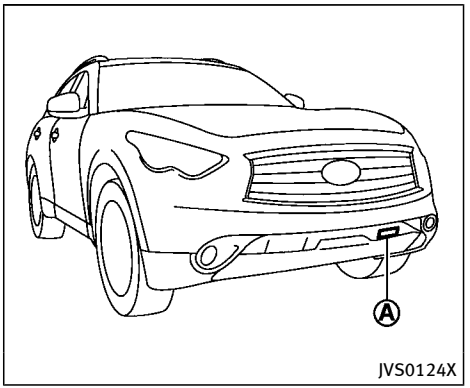

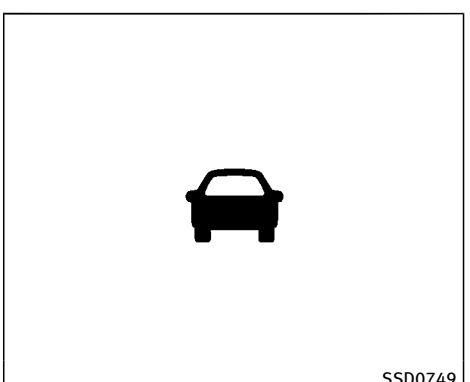

Vehicle ahead detection light

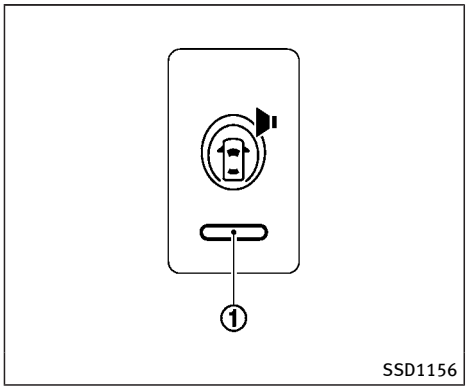

Warning systems switch

The FCW system uses the distance sensor Ⓐ located below the front bumper to measure the distance to the vehicle ahead. When the system judges that your vehicle is getting close to the vehicle ahead in the travel lane, the vehicle ahead detection indicator light on the instrument panel blinks and a warning chime sounds.

The FCW system will be turned on/off by pushing the warning systems switch. The warning systems ON indicator light ① on the switch will illuminate when the system turns on.

PRECAUTIONS ON FCW SYSTEM

WARNING

- **The FCW system is intended to warn you before a collision but will not avoid a collision. It is the driver's responsibility to stay alert, drive safely and be in control of the vehicle at all times.**
- **As there is a performance limit, the system may not provide a warning in certain conditions.**
- **The system will not detect the following objects:**
  - **Pedestrians, animals or obstacles in the roadway**
  - **Oncoming vehicles in the same lane**
- **The system will not detect another vehicle under the following conditions:**
  - **When the sensor gets dirty and it is impossible to detect the distance from the vehicle ahead.**
  - **When driving into a strong light (for example, sunlight)**
- **The sensor generally detects the signals returned from the reflectors on a vehicle ahead. Therefore, the system may not function properly under the following conditions:**
  - **When the reflectors of the vehicle ahead are positioned high or close to each other (including a small vehicle such as motorcycles).**
  - **When the sensor gets dirty or it is impossible to detect the distance from the vehicle ahead.**
  - **When the reflectors on the vehicle ahead are missing, damaged or covered.**
  - **When the reflectors of the vehicle ahead are covered with dirt, snow or road spray.**
  - **When visibility is low (such as rain, fog, snow, etc.).**
  - **When snow or road spray from traveling vehicles is splashed.**
  - **When dense exhaust or other smoke (black smoke) from vehicles reduces the visibility of the sensor.**
  - **When excessively heavy baggage is loaded in the rear seat or the luggage room of your vehicle.**

— When abruptly accelerating or decelerating.

— On a steep downhill slope or on roads with sharp curves.

— When there is a highly reflective object near the vehicle ahead (for example, being very close to another vehicle, signboard, etc.)

— When you are towing a trailer.

- Depending on certain road conditions (curved or beginning of a curve), vehicle conditions (steering position or vehicle position), or the preceding vehicle's conditions (position in lane, etc.), the system may not function properly. The system may detect highly reflective objects such as reflectors, signs, white markers, and other stationary objects on the road or near the traveling lane and provide unnecessary warning.
- The system may not function in offset conditions.
- The system may not function when the distance to the vehicle ahead is extremely close.
- The system is designed to automatically check the sensor's functionality. If the sensor is covered with ice, a transparent or translucent plastic bag, etc., the system may not detect them. In these instances the system may not be able to warn the driver properly. Be sure to check and clean the sensor regularly.
- Excessive noise will interfere with the warning chime sound, and the chime may not be heard.
- A sudden appearance of a vehicle in front (for example, it abruptly cuts in) may not be detected and the system may not warn the driver soon enough.
- The system will be cancelled automatically with a beep sound and the IBA OFF indicator light will illuminate under the following conditions:

  — When the sensor window is dirty

  — When the system malfunctions

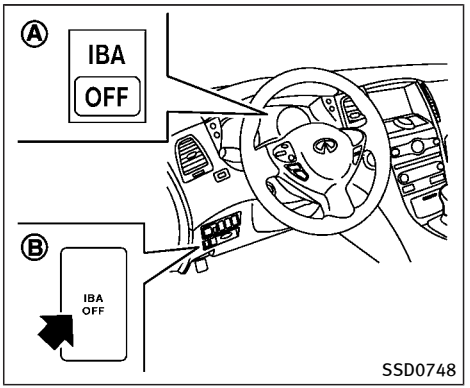

If the IBA OFF indicator light Ⓐ illuminates with a beep sound, pull off the road to a safe location, stop the vehicle and turn the engine off. Check to see if the sensor window is dirty. If the sensor window is dirty, clean it with a soft cloth and restart the engine. If the sensor window is not dirty, restart the engine. If the IBA OFF indicator light continues to illuminate even if the IBA system is turned on with the IBA OFF switch Ⓑ, have the system checked by an INFINITI retailer.

To turn on the IBA system, see "Intelligent Brake Assist (IBA) system" (P.5-70).

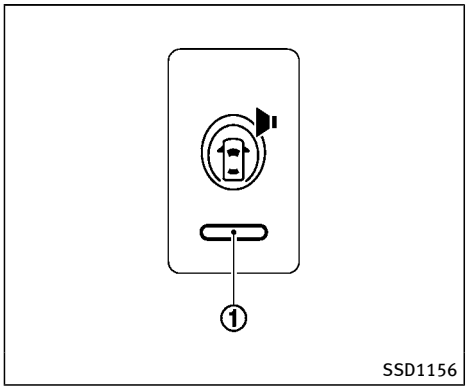

Warning systems switch

FCW system operation

The FCW system will function at speeds of approximately 10 MPH (15 km/h) and above, when the system turns on.

The FCW system has an automatic setting mode and a manual setting mode to turn the system on. The setting mode can be changed. In the automatic setting mode, the FCW system is automatically turned on when the ignition switch is pushed to the ON position. When the FCW system is on, the warning systems ON indicator light ① on the warning systems switch illuminates. To cancel the FCW system, push the warning systems switch. The warning systems ON indicator light will turn off. To turn on the system, push the warning systems switch again.

When the warning systems switch is pushed, the LDW system will also turn on or off simultaneously. See “Lane Departure Warning (LDW) system/Lane Departure Prevention (LDP) system” (P.5-21).

In the manual setting mode, you need to push the warning systems switch to turn on the system after the ignition switch is pushed to the ON position.

The setting mode can be changed using the warning systems switch. To change the setting mode, push and hold the warning systems switch for more than 4 seconds when the warning systems ON indicator is off. When the mode is changed, a chime sounds and the LDW indicator light (orange) flashes.

For the sensor maintenance, see “Intelligent Cruise Control (ICC) system (FULL SPEED RANGE)” (P.5-32).

INTELLIGENT BRAKE ASSIST (IBA) SYSTEM (if so equipped)

The Intelligent Brake Assist (IBA) system warns the driver by a warning light and chime when there is a risk of a collision with the vehicle ahead in the traveling lane and the driver must take avoidance action immediately. The system helps reduce the rear-end collision speed by applying the brakes when the system judges that the collision cannot be prevented.

The IBA system will function when your vehicle is driven at speeds of approximately 10 MPH (15 km/h) and above, and when your vehicle is driven at speeds approximately 10 MPH (15 km/h) faster than the vehicle ahead.

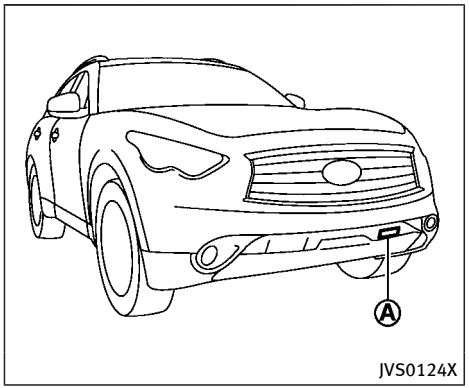

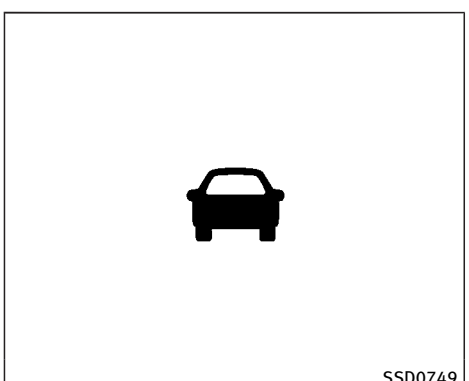

Vehicle ahead detection indicator light

The IBA system uses a distance sensor Ⓐ located below the front bumper to measure the distance to the vehicle ahead. When the system judges that your vehicle is getting close to the vehicle ahead in the traveling lane, the vehicle ahead detection indicator light on the instrument panel blinks and a warning chime sounds.

The IBA system will be turned on/off by pushing the IBA OFF switch. The IBA OFF indicator light display will illuminate when the system is turned off.

PRECAUTIONS ON IBA SYSTEM

WARNING

- **The IBA system is not a collision avoidance system. It is the driver's responsibility to stay alert, drive safely and be in control of the vehicle at all times.**
- **As there is a performance limit, the system may not provide a warning or braking in certain conditions.**
- **The system will not detect the following objects:**
  - **— Pedestrians, animals or obstacles in the roadway**
  - **— Oncoming vehicles in the same lane**
- **The system will not detect another vehicle under the following conditions:**
  - **— When the sensor gets dirty and it is impossible to detect the distance from the vehicle ahead.**
  - **— When driving into a strong light (for example, sunlight)**
- **The sensor generally detects the signals returned from the reflectors on a vehicle ahead. Therefore, the system may not function properly under the following conditions:**
  - **— When the reflectors of the vehicle ahead are positioned high or close to each other (including a small vehicle such as motorcycles).**
  - **— When the sensor gets dirty and it is impossible to detect the distance from the vehicle ahead.**
  - **— When the reflectors on the vehicle ahead are missing, damaged or covered.**
  - **— When the reflectors of the vehicle ahead are covered with dirt, snow or**

road spray.

— When visibility is low (such as rain, fog, snow, etc.).

— When snow or road spray from traveling vehicles is splashed.

— When dense exhaust or other smoke (black smoke) from vehicles reduces the visibility of the sensor.

— When excessively heavy baggage is loaded in the rear seat or the luggage room of your vehicle.

— When abruptly accelerating or decelerating.

— On a steep downhill slope or on roads with sharp curves.

— When there is a highly reflective object near the vehicle ahead (for example, being very close to another vehicle, signboard, etc.)

— When you are towing a trailer.

- Depending on certain road conditions (curved or beginning of a curve), vehicle conditions (steering position or vehicle position), or the preceding vehicle's conditions (position in lane, etc.), the system may not function properly. The system may detect highly reflective objects such as reflectors, signs, white markers, and other stationary objects on the road or near the traveling lane and provide unnecessary warning.
- The system may not function in offset conditions.
- The system may not function when the distance to the vehicle ahead is extremely close.

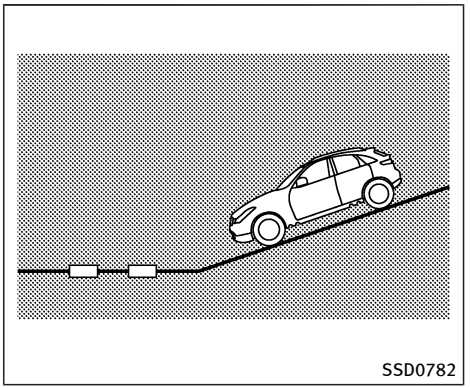

Reflectors on the road

WARNING

- The system may detect highly reflective objects such as reflectors, signs, white markers and other stationary objects on the road or near the traveling lane.

  In extreme conditions, detection of these objects may cause the system to function.
- The system is designed to automatically check the sensor's functionality. If the sensor is covered with ice, a transparent or translucent plastic bag, etc., the

system may not detect them. In these instances the system may not be able to warn the driver properly. Be sure to check and clean the sensor regularly.

- **Excessive noise will interfere with the warning chime sound, and the chime may not be heard.**
- **Never place your foot under the brake pedal when the IBA system turns on. Your foot may be caught when the system controls the brake.**
- **A sudden appearance of a vehicle in front (for example, it abruptly cuts in) may not be detected and the system may not warn the driver soon enough.**
- **The system will be cancelled automatically with a beep sound and the IBA warning light will illuminate under the following conditions:**
  - **— When the sensor window is dirty**
  - **— When the system malfunctions**

If the IBA OFF indicator light illuminates with a beep sound, pull off the road to a safe location, stop the vehicle and turn the engine off. Check to see if the sensor window is dirty. If the sensor window is dirty, clean it with a soft cloth and restart the engine. If the sensor window is not dirty, restart the engine. If the IBA OFF indicator light continues to illuminate even if the IBA system is turned on, have the system checked by an INFINITI retailer.

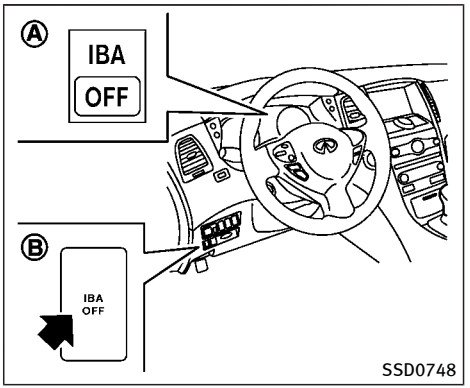

IBA system operation

The IBA system will function when your vehicle is driven at speeds of approximately 10 MPH (15 km/h) or above, and when the vehicle's speed is approximately 10 MPH (15 km/h) faster than that of the vehicle ahead.

To turn the system off/on, push and hold the IBA OFF switch Ⓑ for more than 1 second after starting the engine. When the IBA OFF indicator light Ⓐ on the instrument panel turns off and the IBA OFF switch is pushed, the system will turn off and the IBA OFF indicator light will illuminate. When the IBA OFF switch is pushed again,

the system will turn on and the IBA OFF indicator light will turn off.

The IBA system will remain in the last ON or OFF state it was left in until it is manually changed by pressing the IBA OFF switch.

Illumination of the IBA OFF indicator light without the warning chime sound is an indication that the IBA system is temporarily unavailable. It will occur under the following conditions:

- When driving into a strong light (for example, sunlight)

The IBA OFF indicator light will turn off when the system returns to its normal operating conditions.

For the sensor maintenance, see “Intelligent Cruise Control (ICC) system (FULL SPEED RANGE)” (P.5-32).

BREAK-IN SCHEDULE

CAUTION

During the first 1,200 miles (2,000 km), follow these recommendations to obtain maximum engine performance and ensure the future reliability and economy of your new vehicle.

Failure to follow these recommendations may result in shortened engine life and reduced engine performance.

- Avoid driving for long periods at constant speed, either fast or slow. Do not run the engine over 4,000 rpm.
- Do not accelerate at full throttle in any gear.
- Avoid quick starts.
- Avoid hard braking as much as possible.
- Do not tow a trailer for the first 500 miles (805 km).

FUEL EFFICIENT DRIVING TIPS

Follow these easy-to-use Fuel Efficient Driving Tips to help you achieve the most fuel economy from your vehicle.

1. Use smooth accelerator and brake pedal application.
   - Avoid rapid starts and stops.
   - Use smooth, gentle accelerator and brake application whenever possible.
   - Maintain constant speed while commuting and coast whenever possible.
2. Maintain constant speed.
   - Look ahead to try and anticipate and minimize stops.
   - Synchronizing your speed with traffic lights allows you to reduce your number of stops.
   - Maintaining a steady speed can minimize red light stops and improve fuel efficiency.
3. Use air conditioning (A/C) at higher vehicle speeds.
   - Below 40 MPH (64 km/h), it is more efficient to open windows to cool the vehicle due to reduced engine load.
   - Above 40 MPH (64 km/h), it is more efficient to use A/C to cool the vehicle due to increased aerody-

namic drag.

- Recirculating the cool air in the cabin when the A/C is on reduces cooling load.

4. Drive at economical speeds and distances.
   - Observing the speed limit and not exceeding 60 MPH (97 km/h) (where legally allowed) can improve fuel efficiency due to reduced aerodynamic drag.
   - Maintaining a safe following distance behind other vehicles reduces unnecessary braking.
   - Safely monitoring traffic to anticipate changes in speed permits reduced braking and smooth acceleration changes.
   - Select a gear range suitable to road conditions.
5. Use cruise control.
   - Using cruise control during highway driving helps maintain a steady speed.
   - Cruise control is particularly effective in providing fuel savings when driving on flat terrains.
6. Plan for the shortest route.
   - Utilize a map or navigation system to determine the best route to save time.
7. Avoid idling.
   - Shutting off your engine when safe for stops exceeding 30-60 seconds saves fuel and reduces emissions.
8. Buy an automated pass for toll roads.
   - Automated passes permit drivers to use special lanes to maintain cruising speed through the toll and avoid stopping and starting.
9. Winter warm up.
   - Limit idling time to minimize impact to fuel economy.
   - Vehicles typically need no more than 30 seconds of idling at start-up to effectively circulate the engine oil before driving.
   - Your vehicle will reach its ideal operating temperature more quickly while driving versus idling.
10. Keeping your vehicle cool.
    - Park your vehicle in a covered parking area or in the shade whenever possible.
    - When entering a hot vehicle, opening the windows will help to reduce the inside temperature faster, resulting in reduced demand on your A/C system.

INCREASING FUEL ECONOMY

- Keep your engine tuned up.
- Follow the recommended scheduled maintenance.
- Keep the tires inflated to the correct pressure. Low tire pressure increases tire wear and lowers fuel economy.
- Keep the wheels in correct alignment. Improper alignment increases tire wear and lowers fuel economy.
- Use the recommended viscosity engine oil. (See “Engine oil and oil filter recommendation” (P.9-6).)

ALL-WHEEL DRIVE (AWD) (if so equipped)

Warning light	Comes on or blinks when
AWD Comes on	There is a malfunction in the all wheel drive system.
AWD Blinks rapidly	The power-train oil temperature rises abnormally.
AWD Blinks slowly	The difference in wheel rotation is large.

SSD0336

The AWD warning light is located in the meter.

The AWD warning light comes on when the ignition switch is pushed to the ON position. It turns off soon after the engine is started.

If any malfunction occurs in the AWD system while the engine is running, the warning light will come on.

The warning light may blink rapidly (about twice per second) while trying to free a stuck vehicle due to high power train oil temperature. The driving mode may change to two-wheel drive. If the warning light blinks rapidly during operation, stop the vehicle with the engine idling in a safe place immediately. Then if the light goes off after a while, you can continue driving.

A large difference between the diameters of front and rear wheels will make the warning light blink slowly (about once per two seconds). Pull off the road in a safe area, and idle the engine. Check that all tire sizes are the same, tire pressure is correct and tires are not worn.

If the warning light is blinking after the above operation, have your vehicle checked by an INFINITI retailer as soon as possible.

WARNING

- **For AWD equipped vehicles, do not attempt to raise two wheels off the ground and shift the transmission to**

any drive or reverse position with the engine running. Doing so may result in drivetrain damage or unexpected vehicle movement which could result in serious vehicle damage or personal injury.

- Do not attempt to test an AWD equipped vehicle on a 2-wheel dynamometer (such as the dynamometers used by some states for emissions testing) or similar equipment even if the other two wheels are raised off the ground. Make sure you inform the test facility personnel that your vehicle is equipped with AWD before it is placed on a dynamometer. Using the wrong test equipment may result in drivetrain damage or unexpected vehicle movement which could result in serious vehicle damage or personal injury.

CAUTION

- Do not operate the engine on a free roller when any of the wheels are raised.
- If the warning light comes on while driving there may be a malfunction in the AWD system. Reduce the vehicle speed and have your vehicle checked by an INFINITI retailer as soon as possible.
- If the warning light remains on after the above operation, have your vehicle checked by an INFINITI retailer as soon as possible.
- The power train may be damaged if you continue driving with the warning light blinking.

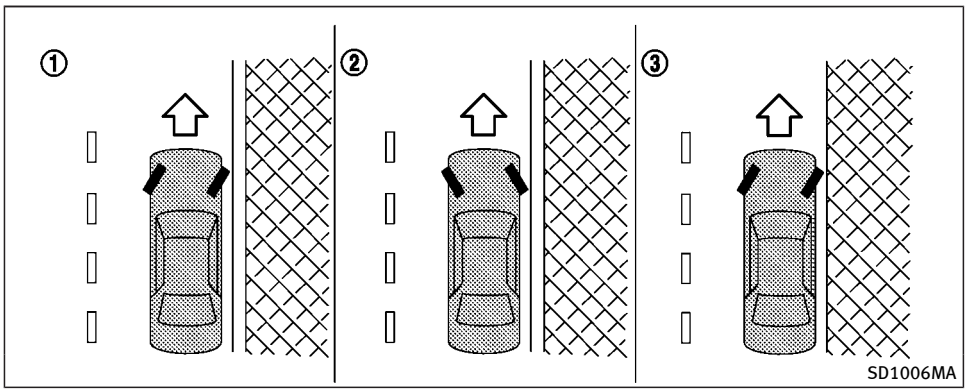

WARNING

- **Do not stop or park the vehicle over flammable materials such as dry grass, waste paper or rags. They may ignite and cause a fire.**
- **Never leave the engine running while the vehicle is unattended.**
- **Do not leave children unattended inside the vehicle. They could unknowingly activate switches or controls. Unattended children could become involved in serious accidents.**

- **Safe parking procedures require that both the parking brake be applied and the transmission be placed in the P (Park) position. Failure to do so could cause the vehicle to move unexpectedly or roll away and result in an accident.**
- **Make sure the automatic transmission shift lever has been pushed as far forward as it can go and cannot be moved without depressing the foot brake pedal.**

1. Firmly apply the parking brake.
2. Move the shift lever to the P (Park) position.
3. To help prevent the vehicle from rolling into the street when parked on a sloping drive way, it is a good practice to turn the wheels as illustrated.
   - HEADED DOWNHILL WITH CURB: ①
     Turn the wheels into the curb and move the vehicle forward until the curb side wheel gently touches the curb.
   - HEADED UPHILL WITH CURB: ②
     Turn the wheels away from the curb and move the vehicle back until the curb side wheel gently touches the curb.
   - HEADED UPHILL OR DOWNHILL, NO CURB: ③
     Turn the wheels toward the side of the road so the vehicle will move away from the center of the road if it moves.
4. Push the ignition switch to the OFF position.

POWER STEERING

WARNING

If the engine is not running or is turned off while driving, the power assist for the steering will not work. Steering will be harder to operate.

The power assisted steering uses a hydraulic pump, driven by the engine, to assist steering.

If the engine stops or the drive belt breaks, you will still have control of the vehicle. However, much greater steering effort is needed, especially in sharp turns and at low speeds.

BRAKE SYSTEM

BRAKING PRECAUTIONS

The brake system has two separate hydraulic circuits. If one circuit malfunctions, you will still have braking at two wheels.

You may feel a small click and hear a sound when the brake pedal is fully depressed slowly. This is not a malfunction and indicates that the brake assist mechanism is operating properly.

Vacuum assisted brakes

The brake booster aids braking by using engine vacuum. If the engine stops, you can stop the vehicle by depressing the brake pedal. However, greater foot pressure on the brake pedal will be required to stop the vehicle and the stopping distance will be longer.

When the brake pedal is depressed slowly and firmly, you may hear a clicking noise and feel a slight pulsation. This is normal and indicates that the Brake Assist System is operating.

Wet brakes

When the vehicle is washed or driven through water, the brakes may get wet. As a result, your braking distance will be longer and the vehicle may pull to one side during braking.

To dry brakes, drive the vehicle at a safe speed while lightly tapping the brake pedal to heat-up the brakes. Do this until the brakes return to normal. Avoid driving the vehicle at high speeds until the brakes function correctly.

PARKING BRAKE BREAK-IN

Break in the parking brake shoes whenever the stopping effect of the parking brake is weakened or whenever the parking brake shoes and/or drums/rotors are replaced, in order to assure the best braking performance.

This procedure is described in the vehicle service manual and can be performed by an INFINITI retailer.

Using the brakes

Avoid resting your foot on the brake pedal while driving. This will cause overheating of the brakes, wearing out the brake and pads faster and reduce gas mileage.

To help save the brakes and to prevent the brakes from overheating, reduce speed and downshift to a lower gear before going down a slope or long grade. Overheated brakes may reduce braking performance

and could result in loss of vehicle control.

WARNING

- **While driving on a slippery surface, be careful when braking, accelerating or downshifting. Abrupt braking or accelerating could cause the wheels to skid and result in an accident.**
- **If the engine is not running or is turned off while driving, the power assist for the brakes will not work. Braking will be harder.**

BRAKE ASSIST

When the force applied to the brake pedal exceeds a certain level, the Brake Assist is activated generating greater braking force than a conventional brake booster even with light pedal force.

WARNING

The Brake Assist is only an aid to assist braking operation and is not a collision warning or avoidance device. It is the driver's responsibility to stay alert, drive safely and be in control of the vehicle at all times.

PREVIEW FUNCTION (Intelligent Cruise Control system equipped models)

When the Preview Function identifies the need to apply emergency braking by sensing a vehicle ahead in the same lane and the distance and relative speed from it, it applies the brake pre-pressure before the driver depresses the brake pedal and helps improve brake response by reducing pedal free play.

- This system will not operate when the vehicle is moving at approximately 20 MPH (32 km/h) or less.
- The pre-pressure function ceases when the following conditions are met:
  1) When the driver depresses the accelerator pedal or the brake pedal.
  2) If the driver does not operate the accelerator or brake pedal within approximately 1 second.

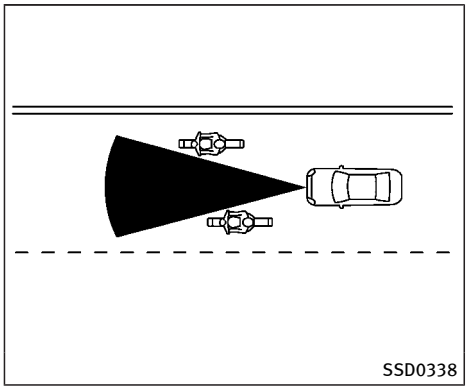

- The sensor will not detect:
  1) Pedestrians or objects in the roadway
  2) Oncoming vehicles in the same lane
  3) Motorcycles traveling offset in the travel lane as illustrated

WARNING

- **This system is only an aid to assist braking operation and is not a collision warning or avoidance device. It is the driver's responsibility to stay alert, drive safely and be in control of the vehicle at all times.**
- **As there is a performance limit to the Preview Function, never rely solely on this system. This system does not correct careless inattentive or absent-minded driving, or overcome poor visibility in rain, fog, or other bad weather. Reduce vehicle speed by depressing the brake pedal, in order to maintain a safe distance between vehicles.**
- **The system may not detect the vehicle in front of you in certain road or weather conditions. The Preview Function may not operate properly under the following conditions. The vehicle is still driveable under normal conditions and the Brake Assist will operate.**
  - **When rain, snow or dirt adhere to the system sensor**
  - **When strong light (for example, at sunrise or sunset) is directly shining on the front of the vehicle**
  - **Winding or hilly roads may cause the sensor to temporarily not detect a vehicle in the same lane or may detect objects or vehicles in other lanes.**
  - **Vehicle position in the lane may cause the sensor to temporarily not detect a vehicle in the same lane or may detect objects or vehicles in other lanes.**

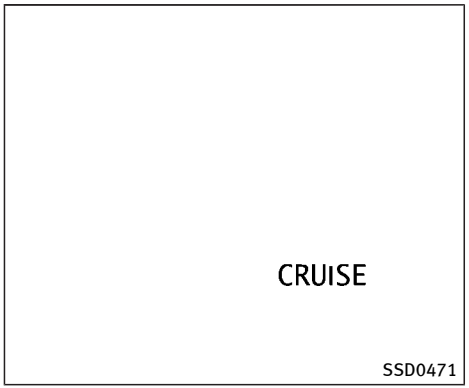

Warning light and display

When the Preview Function is not operating properly, the chime sounds and the system warning light (orange) will come on.

Action to take:

If the warning light comes on, park the vehicle in a safe place. Turn the engine off, restart the engine and resume driving.

If the indicator stays on, it may indicate that the Preview Function is malfunctioning (the brake is operative). Although the Vehicle is still driveable under normal conditions, have the vehicle checked at an INFINITI retailer.

How to handle the sensor

The sensor for the Preview Function is common with Intelligent Cruise Control and is located below the front bumper.

To keep the Preview Function operating properly, be sure to observe the following:

- Always keep the sensor clean. Wipe with a soft cloth carefully so as not to damage the sensor.
- Do not strike or damage the areas around the sensor. Do not touch or remove the screw located on the sensor. Doing so could cause failure or malfunction. If the sensor is damaged due to an accident, contact an INFINITI retailer.
- Do not attach a sticker (including transparent material) or install an accessory near the sensor. This could cause failure or malfunction.

ANTI-LOCK BRAKING SYSTEM (ABS)

WARNING

- **The Anti-lock Braking System (ABS) is a sophisticated device, but it cannot prevent accidents resulting from careless or dangerous driving techniques. It can help maintain vehicle control during braking on slippery surfaces. Remember that stopping distances on slippery surfaces will be longer than on normal surfaces even with ABS. Stopping distances may also be longer on rough, gravel or snow covered roads, or if you are using tire chains. Always maintain a safe distance from the vehicle in front of you. Ultimately, the driver is responsible for safety.**
- **Tire type and condition may also affect braking effectiveness.**
  - **When replacing tires, install the specified size of tires on all four wheels.**
  - **When installing a spare tire, make sure that it is the proper size and type as specified on the Tire and Loading Information label. See “Tire**

and Loading Information label" (P.9-13) of this manual.

— For detailed information, see "Wheels and tires" (P.8-29) of this manual.

The Anti-lock Braking System (ABS) controls the brakes so the wheels do not lock during hard braking or when braking on slippery surfaces. The system detects the rotation speed at each wheel and varies the brake fluid pressure to prevent each wheel from locking and sliding. By preventing each wheel from locking, the system helps the driver maintain steering control and helps to minimize swerving and spinning on slippery surfaces.

Using the system

Depress the brake pedal and hold it down. Depress the brake pedal with firm steady pressure, but do not pump the brakes. The ABS will operate to prevent the wheels from locking up. Steer the vehicle to avoid obstacles.

WARNING

Do not pump the brake pedal. Doing so may result in increased stopping distances.

Self-test feature

The ABS includes electronic sensors, electric pumps, hydraulic solenoids and a computer. The computer has a built-in diagnostic feature that tests the system each time you start the engine and move the vehicle at a low speed in forward or reverse. When the self-test occurs, you may hear a "clunk" noise and/or feel a pulsation in the brake pedal. This is normal and does not indicate a malfunction. If the computer senses a malfunction, it switches the ABS off and illuminates the ABS warning light on the instrument panel. The brake system then operates normally, but without anti-lock assistance.

If the ABS warning light illuminates during the self-test or while driving, have the vehicle checked by an INFINITI retailer.

Normal operation

The ABS operates at speeds above 3 to 6 MPH (5 to 10 km/h). The speed varies according to road conditions.

When the ABS senses that one or more wheels are close to locking up, the actuator rapidly applies and releases hydraulic pressure. This action is similar to pumping the brakes very quickly. You may feel a pulsation in the brake pedal and hear a noise from under the hood or feel a vibration from the actuator when it is operating. This is normal and indicates that the ABS is operating properly. However, the pulsation may indicate that road conditions are hazardous and extra care is required while driving.

VEHICLE DYNAMIC CONTROL (VDC) SYSTEM

The Vehicle Dynamic Control (VDC) system uses various sensors to monitor driver inputs and vehicle motion. Under certain driving conditions, the VDC system helps to perform the following functions.

- Controls brake pressure to reduce tire slip on one slipping drive wheel so power is transferred to a non slipping drive wheel on the same axle.
- Controls brake pressure and engine output to reduce drive wheel slip based on vehicle speed (traction control function).
- Controls brake pressure at individual wheels and engine output to help the driver maintain control of the vehicle in the following conditions:
  - — understeer (vehicle tends to not follow the steered path despite increased steering input)
  - — oversteer (vehicle tends to spin due to certain road or driving conditions).

The VDC system can help the driver to maintain control of the vehicle, but it cannot prevent loss of vehicle control in all driving situations.

When the VDC system operates, the VDC warning light in the instrument panel flashes so note the following:

- The road may be slippery or the system may determine some action is required to keep the vehicle on the steered path.
- You may feel a pulsation in the brake pedal and hear a noise or vibration from under the hood. This is normal and indicates that the VDC system is working properly.
- Adjust your speed and driving to the road conditions.

See “Vehicle Dynamic Control (VDC) warning light” (P.2-19) and “Vehicle Dynamic Control (VDC) off indicator light” (P.2-21).

If a malfunction occurs in the system, the VDC warning light illuminates in the instrument panel. The VDC system automatically turns off.

The VDC OFF switch is used to turn off the VDC system. The VDC off indicator illuminates to indicate the VDC system is off. When the VDC switch is used to turn off the system, the VDC system still operates to prevent one drive wheel from slipping by transferring power to a non slipping drive wheel. The VDC warning light flashes if this occurs. All other VDC functions are off, and the VDC warning light will not flash. The VDC system is automatically reset to on when the ignition switch is placed in the off position then back to the on position.

See “Vehicle Dynamic Control (VDC) warning light” (P.2-19) and “Vehicle Dynamic Control (VDC) off indicator light” (P.2-21)

The computer has a built-in diagnostic feature that tests the system each time you start the engine and move the vehicle forward or in reverse at a slow speed. When the self-test occurs, you may hear a “clunk” noise and/or feel a pulsation in the brake pedal. This is normal and is not an indication of a malfunction.

WARNING

- **The VDC system is designed to help the driver maintain stability but does not prevent accidents due to abrupt steering operation at high speeds or by careless or dangerous driving techniques. Reduce vehicle speed and be especially careful when driving and cornering on slippery surfaces and always drive carefully.**
- **Do not modify the vehicle’s suspension. If suspension parts such as shock absorbers, struts, springs, stabilizer**

bars, bushings and wheels are not INFINITI recommended for your vehicle or are extremely deteriorated, the VDC system may not operate properly. This could adversely affect vehicle handling performance, and the VDC warning light may illuminate.

- **If brake related parts such as brake pads, rotors and calipers are not INFINITI recommended or are extremely deteriorated, the VDC system may not operate properly and the VDC warning light may illuminate.**
- **If engine control related parts are not INFINITI recommended or are extremely deteriorated, the VDC warning light may illuminate.**
- **When driving on extremely inclined surfaces such as higher banked corners, the VDC system may not operate properly and the VDC warning light may illuminate. Do not drive on these types of roads.**
- **When driving on an unstable surface such as a turntable, ferry, elevator or ramp, the VDC warning light may illuminate. This is not a malfunction. Restart the engine after driving onto a stable surface.**
- **If wheels or tires other than the INFINITI recommended ones are used, the VDC system may not operate properly and the VDC warning light may illuminate.**
- **The VDC system is not a substitute for winter tires or tire chains on a snow covered road.**

FREEING A FROZEN DOOR LOCK

To prevent a door lock from freezing, apply deicer through the key hole. If the lock becomes frozen, heat the key before inserting it into the key hole or use the Intelligent Key system.

ANTIFREEZE

In the winter when it is anticipated that the outside temperature will drop below 32°F (0°C), check antifreeze to assure proper winter protection. For additional information, see “Engine cooling system” (P.8-7).

BATTERY

If the battery is not fully charged during extremely cold weather conditions, the battery fluid may freeze and damage the battery. To maintain maximum efficiency, the battery should be checked regularly. For additional information, see “Battery” (P.8-15).

DRAINING OF COOLANT WATER

If the vehicle is to be left outside without antifreeze, drain the cooling system, including the engine block. Refill before operating the vehicle. For details, see “Engine cooling system” (P.8-7).

TIRE EQUIPMENT

SUMMER tires have a tread designed to provide superior performance on dry pavement. However, the performance of these tires will be substantially reduced in snowy and icy conditions. If you operate your vehicle on snowy or icy roads, INFINITI recommends the use of MUD & SNOW or ALL SEASON tires on all four wheels. Consult an INFINITI retailer for the tire type, size, speed rating and availability information.

For additional traction on icy roads, studded tires may be used. However, some U.S. states and Canadian provinces prohibit their use. Check local, state and provincial laws before installing studded tires.

Skid and traction capabilities of studded snow tires, on wet or dry surfaces, may be poorer than that of non-studded snow tires.

Tire chains may be used. For details, see “Tire chains” (P.8-36) of this manual.

For all-wheel drive

If you install snow tires, they must also be the same size, brand, construction and tread pattern on all four wheels.

SPECIAL WINTER EQUIPMENT

It is recommended that the following items be carried in the vehicle during winter:

- A scraper and stiff-bristled brush to remove ice and snow from the windows and wiper blades.
- A sturdy, flat board to be placed under the jack to give it firm support.
- A shovel to dig the vehicle out of snowdrifts.
- Extra window washer fluid to refill the reservoir tank.

DRIVING ON SNOW OR ICE

WARNING

- **Wet ice (32°F, 0°C and freezing rain), very cold snow or ice can be slick and very hard to drive on. The vehicle will have much less traction or “grip” under these conditions. Try to avoid driving on wet ice until the road is salted or sanded.**
- **Whatever the condition, drive with caution. Accelerate and slow down with care. If accelerating or downshifting too fast, the drive wheels will lose even more traction.**
- **Allow more stopping distance under these conditions. Braking should be started sooner than on dry pavement.**
- **Allow greater following distances on slippery roads.**
- **Watch for slippery spots (glare ice). These may appear on an otherwise clear road in shaded areas. If a patch of ice is seen ahead, brake before reaching it. Try not to brake while on the ice, and avoid any sudden steering maneuvers.**
- **Do not use the cruise control on slippery roads.**
- **Snow can trap dangerous exhaust gases under your vehicle. Keep snow clear of the exhaust pipe and from around your vehicle.**

ENGINE BLOCK HEATER (if so equipped)

Engine block heaters are used to assist with cold temperature starting.

The engine block heater should be used when the outside temperature is 20°F (–7°C) or lower.

To use the engine block heater

1. Turn the engine off.
2. Open the hood and unwrap the engine block heater cord.
3. Plug the engine block heater cord into a grounded 3-wire, 3-pronged extension cord.
4. Plug the extension cord into a Ground Fault Interrupt (GFI) protected, grounded 110-volt AC (VAC) outlet.
5. The engine block heater must be plugged in for at least 2 - 4 hours, depending on outside temperatures, to properly warm the engine coolant. Use an appropriate timer to turn the engine block heater on.
6. Before starting the engine, unplug and properly store the cord to keep it away from moving parts.

WARNING

- **Do not use your engine block heater with an ungrounded electrical system or a 2-pronged adapter. You can be seriously injured by an electrical shock if you use an ungrounded connection.**
- **Disconnect and properly store the engine block heater cord before starting the engine. Damage to the cord could result in an electrical shock and can cause serious injury.**
- **Use a heavy-duty 3-wire, 3-pronged extension cord rated for at least 10A. Plug the extension cord into a Ground Fault Interrupt (GFI) protected, grounded 110-VAC outlet. Failure to use the proper extension cord or a grounded outlet can result in a fire or electrical shock and cause serious personal injury.**

MEMO

6 In case of emergency

Hazard warning flasher switch 6-2
Roadside assistance program 6-2
Emergency engine shut off 6-3
Flat tire 6-3
Tire Pressure Monitoring System (TPMS) 6-3
Changing a flat tire 6-4
Jump starting 6-9
Push starting 6-11
If your vehicle overheats 6-11
Towing your vehicle 6-12
Towing recommended by INFINITI 6-13
Vehicle recovery (freeing a stuck vehicle) 6-15

HAZARD WARNING FLASHER SWITCH

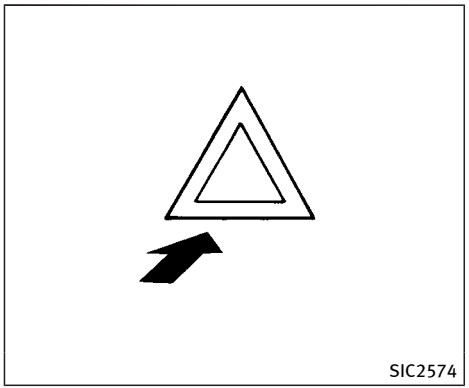

Push the switch on to warn other drivers when you must stop or park under emergency conditions. All turn signal lights will flash.

WARNING

- **If stopping for an emergency, be sure to move the vehicle well off the road.**
- **Do not use the hazard warning flashers while moving on the highway unless unusual circumstances force you to drive so slowly that your vehicle might become a hazard to other traffic.**
- **Turn signals do not work when the hazard warning flasher lights are on.**

The flasher can be actuated with the ignition switch in any position.

Some state laws may prohibit the use of the hazard warning flasher switch while driving.

ROADSIDE ASSISTANCE PROGRAM

In the event of a roadside emergency, Roadside Assistance Service is available to you. Please refer to your Warranty Information Booklet (U.S.) or Warranty & Roadside Assistance Information Booklet (Canada) for details.

EMERGENCY ENGINE SHUT OFF

To shut off the engine in an emergency situation while driving perform the following procedure:

- Rapidly push the push-button ignition switch 3 consecutive times in less than 1.5 seconds, or
- Push and hold the push-button ignition switch for more than 2 seconds.

FLAT TIRE

TIRE PRESSURE MONITORING SYSTEM (TPMS)

This vehicle is equipped with the Tire Pressure Monitoring System (TPMS). It monitors tire pressure of all tires except the spare. When the low tire pressure warning light is lit and the CHECK TIRE PRESSURE warning appears on the vehicle information display, one or more of your tires is significantly under-inflated. If the vehicle is being driven with low tire pressure, the TPMS will activate and warn you of it by the low tire pressure warning light. This system will activate only when the vehicle is driven at speeds above 16 MPH (25 km/h). For more details, see “Warning/indicator lights and audible reminders” (P.2-13), “Tire Pressure information” (P.4-11) and “Tire Pressure Monitoring System (TPMS)” (P.5-4).

WARNING

- **If the low tire pressure warning light illuminates or LOW PRESSURE information is displayed on the monitor screen while driving, avoid sudden steering maneuvers or abrupt braking, reduce vehicle speed, pull off the road to a safe location and stop the vehicle as soon as possible. Driving with under-inflated tires may permanently damage the tires and increase the likelihood of tire failure. Serious vehicle damage could occur and may lead to an accident and could result in serious personal injury. Check the tire pressure for all four tires. Adjust the tire pressure to the recommended COLD tire pressure shown on the Tire and Loading Information label to turn the low tire pressure warning light OFF. If the light still illuminates while driving after adjusting the tire pressure, a tire may be flat. If you have a flat tire, replace it with a spare tire as soon as possible.**
- **When a spare tire is mounted or a wheel is replaced, the TPMS will not function and the low tire pressure warning light will flash for approximately 1 minute. The light will remain on after 1 minute. Contact your INFINITI retailer as soon as possible for tire replacement and/or system resetting.**
- **Replacing tires with those not originally specified by INFINITI could affect the proper operation of the TPMS.**
- **Do not inject any tire liquid or aerosol tire sealant into the tires, as this may**

cause a malfunction of the tire pressure sensors.

CHANGING A FLAT TIRE

If you have a flat tire, follow the instructions below.

Stopping the vehicle

1. Safely move the vehicle off the road and away from traffic.
2. Turn on the hazard warning flashers.
3. Park on a level surface and apply the parking brake. Move the shift lever to the P (Park) position.
4. Turn off the engine.
5. Raise the hood to warn other traffic, and to signal professional road assistance personnel that you need assistance.
6. Have all passengers get out of the vehicle and stand in a safe place, away from traffic and clear of the vehicle.

WARNING

- **Make sure the parking brake is securely applied and the automatic transmission is in the P (Park) position.**
- **Never change tires when the vehicle is on a slope, ice or slippery areas. This is hazardous.**
- **Never change tires if oncoming traffic is close to your vehicle. Wait for professional road assistance.**

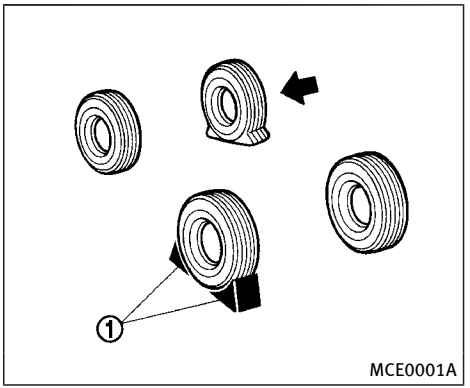

Blocking wheels

Place suitable blocks ① at both the front and back of the wheel diagonally opposite the flat tire to prevent the vehicle from moving when it is jacked up.

WARNING

Be sure to block the wheel as the vehicle may move and result in personal injury.

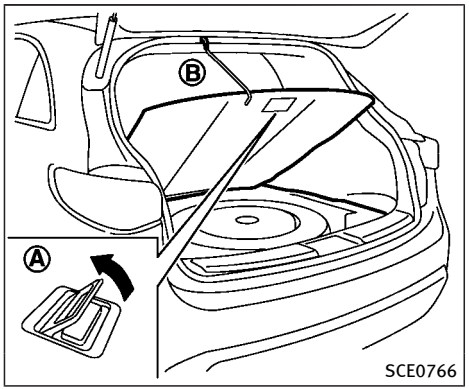

Getting the spare tire and tools

1. Remove the cargo cover (if so equipped).

   See “Cargo cover” (P.2-56).

2. Raise the luggage room floor cover using the handle Ⓐ, then hang it on the edge of the luggage room opening using the hook Ⓑ.

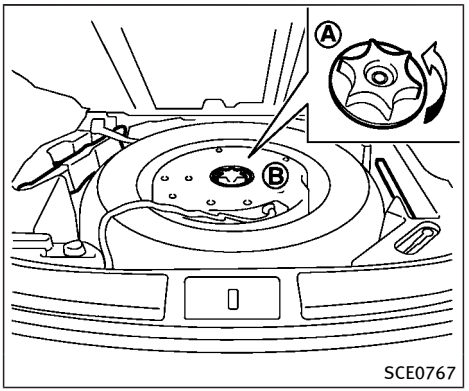

Remove jacking tools and the spare tire located under the luggage room.

Turn the retainer counterclockwise Ⓐ, remove the subwoofer Ⓑ (if so equipped) and place it on the side of the luggage room (with the flat surface facing down), then remove the spare tire. Be careful not to let the subwoofer fall down.

Jacking up the vehicle and removing the damaged tire

WARNING

- **Never get under the vehicle while it is supported only by the jack. If it is necessary to work under the vehicle, support it with safety stands.**
- **Use only the jack provided with your vehicle to lift the vehicle. Do not use the jack provided with your vehicle on other vehicles. The jack is designed for lifting only your vehicle during a tire change.**
- **Use the correct jack-up points. Never use any other part of the vehicle for jack support.**
- **Never jack up the vehicle more than necessary.**
- **Never use blocks on or under the jack.**
- **Do not start or run the engine while vehicle is on the jack, as it may cause the vehicle to move. This is especially true for vehicles with limited slip differentials.**
- **Do not allow passengers to stay in the vehicle while it is on the jack.**

Carefully read the caution label attached to the jack body and the following instructions.

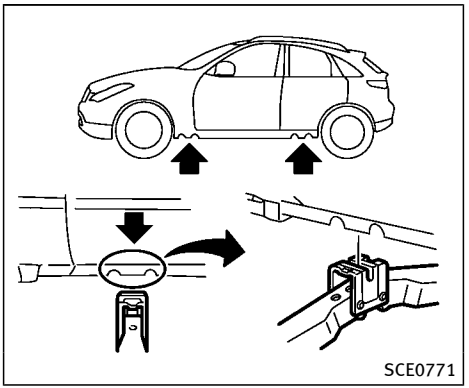

Jack-up point

1. Place the jack directly under the jack-up point as illustrated so the top of the jack contacts the vehicle at the jack-up point. Align the jack head between the two notches in the front or the rear as shown. Also fit the groove of the jack head between the notches as shown.

   The jack should be used on level firm ground.

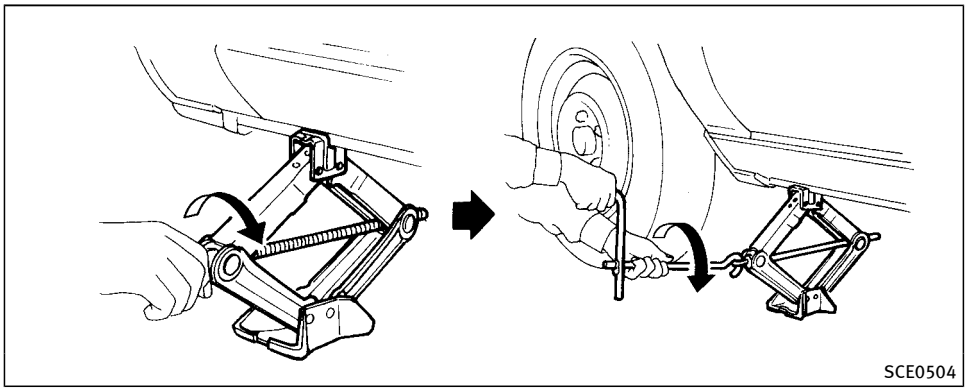

2. Loosen each wheel nut one or two turns by turning counterclockwise with the wheel nut wrench. **Do not remove the wheel nuts until the tire is off the ground.**
3. Carefully raise the vehicle until the tire clears the ground. To lift the vehicle, securely hold the jack lever and rod with both hands as shown above. Remove the wheel nuts, and then remove the tire.

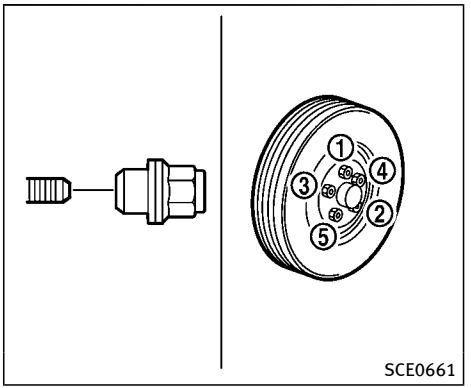

Installing the spare tire

The T-type spare tire is designed for emergency use. (See specific instructions under the heading "Wheels and tires" (P.8-29).)

1. Clean any mud or dirt from the surface between the wheel and hub.
2. Carefully put the spare tire on and tighten the wheel nuts finger tight.
3. With the wheel nut wrench, tighten wheel nuts alternately and evenly in the sequence as illustrated (①, ②, ③, ④, ⑤) until they are tight.

4. Lower the vehicle slowly until the tire touches the ground. Then, with the wheel nut wrench, tighten the wheel nuts securely in the sequence as illustrated. Lower the vehicle completely.

WARNING

- **Incorrect wheel nuts or improperly tightened wheel nuts can cause the wheel to become loose or come off. This could cause an accident.**
- **Do not use oil or grease on the wheel studs or nuts. This could cause the nuts to become loose.**
- **Retighten the wheel nuts when the vehicle has been driven for 600 miles (1,000 km) (also in cases of a flat tire, etc.).**

- **As soon as possible, tighten the wheel nuts to the specified torque with a torque wrench.**

  Wheel nut tightening torque:
  80 ft-lb (108 N·m)

  The wheel nuts must be kept tightened to specification at all times. It is recommended that wheel nuts be tightened to specifications at each lubrication interval.
- **Adjust tire pressure to the COLD pressure.**

  COLD pressure:

  After the vehicle has been parked for three hours or more or driven less than 1 mile (1.6 km).

  COLD tire pressures are shown on the Tire and Loading Information label affixed to the driver side center pillar.

After adjusting tire pressure to the COLD tire pressure, the display of the tire pressure information may show higher pressure than the COLD tire pressure after the vehicle has been driven more than 1 mile (1.6 km). This is because the tire pressurizes as the tire temperature rises. This does not indicate a system malfunction.

Stowing the damaged tire and tools

1. Securely store the damaged tire, jack and tools in the storage area.
2. Close the luggage floor cover.
3. Close the lift gate.

WARNING

- **Always make sure that the spare tire and jacking equipment are properly secured after use. Such items can become dangerous projectiles in an accident or sudden stop.**
- **The T-type spare tire and small size spare tire are designed for emergency use. See specific instructions under the heading "Wheels and tires" (P.8-29).**

JUMP STARTING

To start your engine with a booster battery, the instructions and precautions below must be followed.

WARNING

- **If done incorrectly, jump starting can lead to a battery explosion, resulting in severe injury or death. It could also damage your vehicle.**
- **Explosive hydrogen gas is always present in the vicinity of the battery. Keep all sparks and flames away from the battery.**
- **Do not allow battery fluid to come into contact with eyes, skin, clothing or painted surfaces. Battery fluid is a corrosive sulphuric acid solution which can cause severe burns. If the fluid should come into contact with anything, immediately flush the contacted area with water.**
- **Keep the battery out of the reach of children.**
- **The booster battery must be rated at 12 volts. Use of an improperly rated battery can damage your vehicle.**
- **Whenever working on or near a battery, always wear suitable eye protectors (for example, goggles or industrial safety spectacles) and remove rings, metal bands, or any other jewelry. Do not lean over the battery when jump starting.**
- **Do not attempt to jump start a frozen battery. It could explode and cause serious injury.**
- **Your vehicle has an automatic engine cooling fan. It could come on at any time. Keep hands and other objects away from it.**

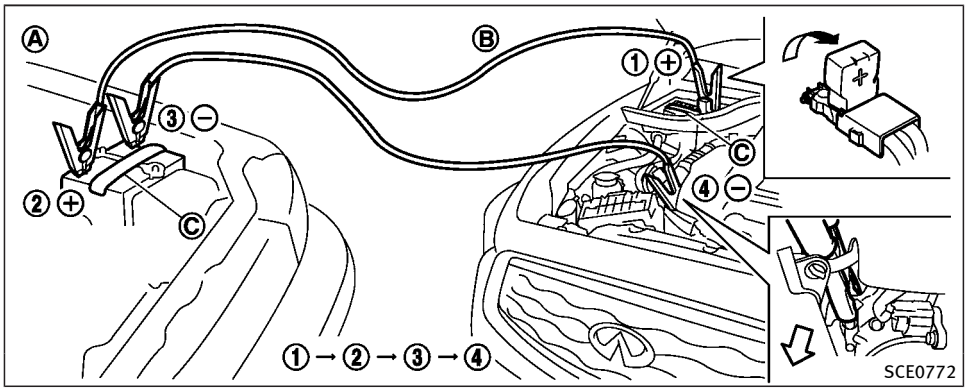

WARNING

Always follow the instructions below. Failure to do so could result in damage to the charging system and cause personal injury.

1. Remove the engine compartment cover, if necessary. See “Engine compartment check locations” (P.8-7).
2. If the booster battery is in another vehicle Ⓐ, position the two vehicles (Ⓐ and Ⓑ) to bring their batteries into close proximity to each other.

   Do not allow the two vehicles to touch.
3. Apply parking brake. Move the shift lever to the P (Park) position. Switch off all unnecessary electrical systems (light, heater, air conditioner, etc.).
4. Remove vent caps on the battery (if so equipped). Cover the battery with a firmly wrung out moist cloth Ⓒ to reduce explosion hazard.
5. Connect jumper cables in the sequence as illustrated (① → ② → ③ → ④).

CAUTION

- **Always connect positive (+) to positive (+) and negative (–) to body ground (as illustrated) — not to the battery.**
- **Make sure the jumper cables do not touch moving parts in the engine compartment and that clamps do not contact any other metal.**

6. Start the engine of the booster vehicle Ⓐ and let it run for a few minutes.
7. Keep the engine speed of the booster vehicle Ⓐ at about 2,000 rpm, and start the engine of the vehicle being jump started Ⓑ.

CAUTION

Do not keep the starter motor engaged for more than 10 seconds. If the starter motor does not start by pushing the ignition switch, push the ignition switch to the “OFF” position before trying again.

8. After starting your engine, carefully disconnect the negative cable and then

the positive cable (④ → ③ → ② → ①).

9. Replace the vent caps (if so equipped). Be sure to dispose of the cloth used to cover the vent holes as it may be contaminated with corrosive acid.
10. Put the battery cover on.

PUSH STARTING

Do not attempt to start the engine by pushing.

CAUTION

- **Automatic transmission models cannot be push-started or tow-started. Attempting to do so may cause transmission damage.**
- **Three way catalyst equipped models should not be started by pushing since the three way catalyst may be damaged.**
- **Never try to start the vehicle by towing it; when the engine starts, the forward surge could cause the vehicle to collide with the tow vehicle.**

IF YOUR VEHICLE OVERHEATS

CAUTION

- **Do not continue to drive if your vehicle overheats. Doing so could cause engine damage or a vehicle fire.**
- **To avoid the danger of being scalded, never remove the radiator cap while the engine is still hot. When the radiator cap is removed, pressurized hot water will spurt out, possibly causing serious injury.**
- **Do not open the hood if steam is coming out.**

If your vehicle is overheating (indicated by an extremely high temperature gauge reading), or if you feel a lack of engine power, detect abnormal noise, etc., take the following steps:

1. Move the vehicle safely off the road, apply the parking brake and move the shift lever to the P (Park) position.

   Do not stop the engine.
2. Turn off the climate control. Open all the windows, move the heater or air conditioner temperature control to maximum hot and fan control to high

speed.

3. If engine overheating is caused by climbing a long hill on a hot day, run the engine at a fast idle (approximately 1,500 rpm) until the temperature gauge indication returns to normal.
4. Get out of the vehicle. Look and listen for steam or coolant escaping from the radiator before opening the hood. (If steam or coolant is escaping, turn off the engine.) Do not open the hood further until no steam or coolant can be seen.
5. Open the engine hood.

WARNING

If steam or water is coming from the engine, stand clear to prevent getting burned.

6. Visually check drive belts for damage or looseness. Also check if the cooling fan is running. The radiator hoses and radiator should not leak water. If coolant is leaking or the cooling fan does not run, stop the engine.

WARNING

Be careful not to allow your hands, hair, jewelry or clothing to come into contact with, or get caught in, engine belts or the engine cooling fan. The engine cooling fan can start at any time.

7. After the engine cools down, check the coolant level in the reservoir tank with the engine running. Add coolant to the reservoir tank if necessary. Have your vehicle repaired at the nearest INFINITI retailer.

TOWING YOUR VEHICLE

When towing your vehicle, all State (Provincial in Canada) and local regulations for towing must be followed. Incorrect towing equipment could damage your vehicle. Towing instructions are available from an INFINITI retailer. Local service operators are familiar with the applicable laws and procedures for towing. To assure proper towing and to prevent accidental damage to your vehicle, INFINITI recommends that you have a service operator tow your vehicle. It is advisable to have the service operator carefully read the following precautions.

WARNING

- **Never ride in a vehicle that is being towed.**
- **Never get under your vehicle after it has been lifted by a tow truck.**

CAUTION

- **When towing, make sure that the transmission, axles, steering system and powertrain are in working condition. If any unit is damaged, dollies must be**

used.

- **Always attach safety chains before towing.**

For information about towing your vehicle behind a recreational vehicle (RV), see “Flat towing” (P.9-27) of this manual.

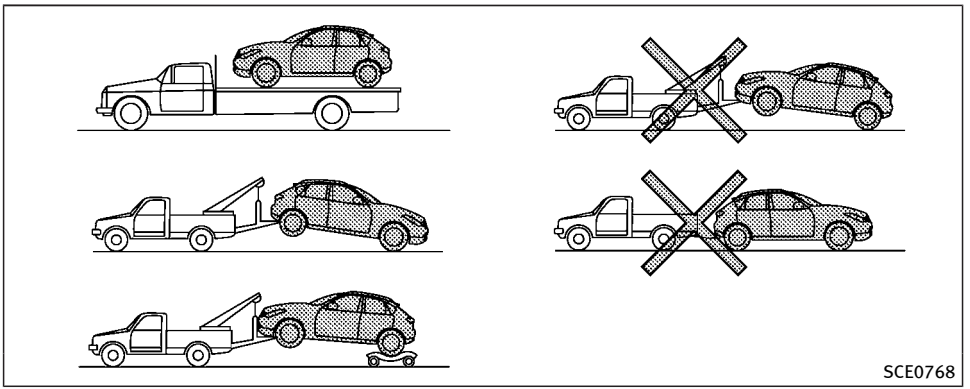

Two-wheel drive models

TOWING RECOMMENDED BY INFINITI

Two-Wheel Drive (2WD) models

INFINITI recommends that your vehicle be towed with the driving (rear) wheels off the ground or place the vehicle on a flat bed truck as illustrated.

CAUTION

- **Never tow automatic transmission models with the rear wheels on the ground or four wheels on the ground (forward or backward), as this may cause serious and expensive damage to the transmission. If it is necessary to tow the vehicle with the front wheels raised, always use towing dollies under the rear wheels.**
- **When towing rear wheel drive models with the front wheels on the ground or on towing dollies: Push the ignition switch to the ACC or ON position, and secure the steering wheel in a straight-ahead position with a rope or similar device.**

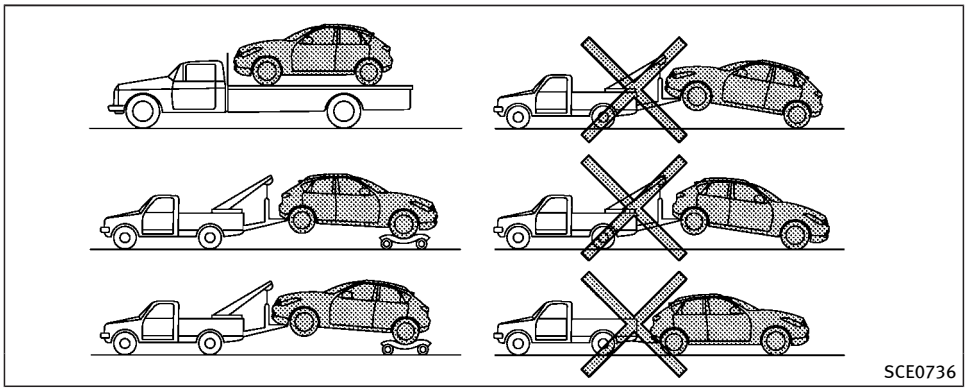

All-wheel drive models

All-Wheel Drive (AWD) models

INFINITI recommends that towing dollies be used when towing your vehicle or the vehicle be placed on a flat bed truck as illustrated.

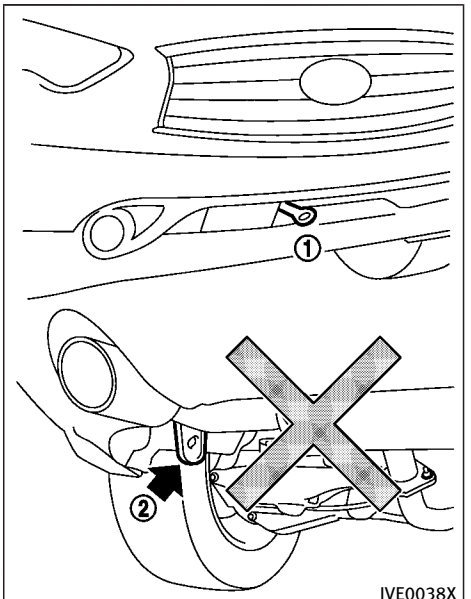

CAUTION

Never tow AWD models with any of the wheels on the ground as this may cause serious and expensive damage to the powertrain.

VEHICLE RECOVERY (freeing a stuck vehicle)

WARNING

- **Stand clear of a stuck vehicle.**
- **Do not spin your tires at high speed. This could cause them to explode and result in serious injury. Parts of your vehicle could also overheat and be damaged.**

Pulling a stuck vehicle

If your vehicle is stuck in sand, snow, mud, etc., use a tow strap or other device designed specifically for vehicle recovery. Always follow the manufacturer's instructions for the recovery device.

Securely install the vehicle recovery hook ① stored with jacking tools as illustrated. Attach the tow strap to the recovery hook. Make sure that the hook is properly secured in the original place after use.

Do not use the tie down hooks ② for towing or vehicle recovery.

CAUTION

- **Tow chains or cables must be attached only to the vehicle recovery hooks or main structural members of the vehicle. Otherwise, the vehicle body will be damaged.**
- **Do not use the vehicle tie downs to free a vehicle stuck in sand, snow, mud, etc.**
- **Never tow a vehicle using the vehicle tie downs or recovery hooks.**
- **Always pull the cable straight out from the front of the vehicle. Never pull on the vehicle at an angle.**
- **Pulling devices should be routed so they do not touch any part of the suspension, steering, brake or cooling systems.**
- **Pulling devices such as ropes or canvas straps are not recommended for use in vehicle towing or recovery.**

Rocking a stuck vehicle

If your vehicle is stuck in sand, snow, mud, etc., use the following procedure:

1. Turn off the Vehicle Dynamic Control (VDC) system.
2. Make sure the area in front and behind the vehicle is clear of obstructions.
3. Turn the steering wheel right and left to clear an area around the front tires.
4. Slowly rock the vehicle forward and backward.
   - Shift back and forth between R (reverse) and D (drive).
   - Apply the accelerator as little as possible to maintain the rocking motion.
   - Release the accelerator pedal before shifting between R and D.
   - Do not spin the tires above 35 MPH (55 km/h).
5. If the vehicle cannot be freed after a few tries, contact a professional towing service to remove the vehicle.

MEMO

7 Appearance and care

Cleaning exterior 7-2
Washing 7-2
Waxing 7-2
Removing spots 7-3
Underbody 7-3
Glass 7-3
Wheels 7-3
Chrome parts 7-4
Tire dressing 7-4
Cleaning interior 7-4
Air fresheners 7-5
Floor mats 7-5
Seat belts 7-6
Corrosion protection 7-7
Most common factors contributing to vehicle corrosion 7-7
Environmental factors influence the rate of corrosion 7-7
To protect your vehicle from corrosion 7-7

CLEANING EXTERIOR

In order to maintain the appearance of your vehicle, it is important to take proper care of it.

To protect the paint surface, wash your vehicle as soon as you can:

- after a rainfall to prevent possible damage from acid rain
- after driving on coastal roads
- when contaminants such as soot, bird droppings, tree sap, metal particles or bugs get on the paint surface
- when dust or mud builds up on the surface

Whenever possible, store or park your vehicle inside a garage or in a covered area.

When it is necessary to park outside, park in a shady area or protect the vehicle with a body cover.

Be careful not to scratch the paint surface when putting on or removing the body cover.

WASHING

Wash dirt off the vehicle with a wet sponge and plenty of water. Clean the vehicle thoroughly using a mild soap, a special vehicle soap or general purpose dishwashing liquid mixed with clean, lukewarm (never hot) water.

CAUTION

- **Do not use car washes that use acid in the detergent. Some car washes, especially brushless ones, use some acid for cleaning. The acid may react with some plastic vehicle components, causing them to crack. This could affect their appearance, and also could cause them not to function properly. Always check with your car wash to confirm that acid is not used.**
- **Do not wash the vehicle with strong household soap, strong chemical detergents, gasoline or solvents.**
- **Do not wash the vehicle in direct sunlight or while the vehicle body is hot, as the surface may become water-spotted.**
- **Avoid using tight-napped or rough cloths, such as washing mitts. Care must be taken when removing caked-on dirt or other foreign substances so the paint surface is not scratched or damaged.**

Rinse the vehicle again with plenty of clean water.

Inside flanges, seams and folds on the doors, hatches and hood are particularly vulnerable to the effects of road salt. Therefore, these areas must be regularly cleaned. Make sure that the drain holes in the lower edge of the door are open. Spray water under the body and in the wheel wells to loosen the dirt and wash away road salt.

Avoid leaving water spots on the paint surface by using a damp chamois to dry the vehicle.

WAXING

Regular waxing protects the paint surface and helps retain new vehicle appearance. Polishing is recommended to remove built-up wax residue and to avoid a weathered appearance before reapplying wax.

An INFINITI retailer can assist you in choosing the proper product.

- Wax your vehicle only after a thorough

washing. Follow the instructions supplied with the wax.

- Do not use a wax containing any abrasives, cutting compounds or cleaners that may damage the vehicle finish.

Machine compound or aggressive polishing on a base coat/clear coat paint finish may dull the finish or leave swirl marks.

REMOVING SPOTS

Remove tar and oil spots, industrial dust, insects, and tree sap as quickly as possible from the paint surface to avoid lasting damage or staining. Special cleaning products are available at an INFINITI retailer or any automotive accessory stores.

UNDERBODY

In areas where road salt is used in winter, the underbody must be cleaned regularly. This will prevent dirt and salt from building up and causing the acceleration of corrosion on the underbody and suspension. Before the winter period and again in the spring, the underseal must be checked and, if necessary, re-treated.

GLASS

Use glass cleaner to remove smoke and dust film from the glass surfaces. It is normal for glass to become coated with a film after the vehicle is parked in the hot sun. Glass cleaner and a soft cloth will easily remove this film.

CAUTION

When cleaning the inside of the windows, do not use sharp-edged tools, abrasive cleaners or chlorine-based disinfectant cleaners. They could damage the electrical conductors, radio antenna elements or rear window defroster elements.

WHEELS

Wash the wheels when washing the vehicle to maintain their appearance.

- Clean the inner side of the wheels when the wheel is changed or the underside of the vehicle is washed.
- Inspect wheel rims regularly for dents or corrosion. Such damage may cause loss of pressure or poor seal at the tire bead.
- INFINITI recommends that the road wheels be waxed to protect against road salt in areas where it is used during winter.

CAUTION

Do not use abrasive cleaners when washing the wheels.

Aluminum alloy wheels

Wash regularly with a sponge dampened in a mild soap solution, especially during winter months in areas where road salt is used. Salt could discolor the wheels if not removed.

CAUTION

Follow the directions below to avoid staining or discoloring the wheels:

- **Do not use a cleaner that uses strong acid or alkali contents to clean the wheels.**
- **Do not apply wheel cleaners to the wheels when they are hot. The wheel temperature should be the same as**

ambient temperature.

- **Rinse the wheel to completely remove the cleaner within 15 minutes after the cleaner is applied.**

CHROME PARTS

Clean chrome parts regularly with a non-abrasive chrome polish to maintain the finish.

TIRE DRESSING

INFINITI does not recommend the use of tire dressings. Tire manufacturers apply a coating to the tires to help reduce discoloration of the rubber. If a tire dressing is applied to the tires, it may react with the coating and form a compound. This compound may come off the tire while driving and stain the vehicle paint.

If you choose to use a tire dressing, take the following precautions:

- Use a water-based tire dressing. The coating on the tire dissolves more easily with an oil-based tire dressing.
- Apply a light coat of tire dressing to help prevent it from entering the tire tread/grooves (where it would be difficult to remove).
- Wipe off excess tire dressing using a dry towel. Make sure the tire dressing is completely removed from the tire tread/grooves.
- Allow the tire dressing to dry as recommended by tire dressing manufacturer.

CLEANING INTERIOR

Occasionally remove loose dust from the interior trim, plastic parts and seats using a vacuum cleaner or soft bristled brush. Wipe the vinyl and leather surfaces with a clean, soft cloth dampened in mild soap solution, then wipe clean with a dry soft cloth.

Regular care and cleaning is required in order to maintain the appearance of the leather.

Before using any fabric protector, read the manufacturer's recommendations. Some fabric protectors contain chemicals that may stain or bleach the seat material.

Use a cloth dampened only with water, to clean the meter and gauge lens.

WARNING

Do not use water or acidic cleaners (hot steam cleaners) on the seat. This can damage the seat or occupant classification sensors. This can also affect the operation of the air bag system and result in serious personal injury.

CAUTION

- **Never use benzine, thinner, or any similar material.**
- **For cleaning, use a soft cloth, dampened with water. Never use a rough cloth, alcohol, benzine, thinner or any kind of solvent or paper towel with a chemical cleaning agent. They will scratch or cause discoloration to the lens.**
- **Do not spray any liquid such as water on the meter lens. Spraying liquid may cause the system to malfunction.**
- **Small dirt particles can be abrasive and damaging to the leather surfaces and should be removed promptly. Do not use saddle soap, car waxes, polishes, oils, cleaning fluids, solvents, detergents or ammonia-based cleaners as they may damage the leather's natural finish.**
- **Only use fabric protectors approved by INFINITI.**
- **Do not use glass or plastic cleaner on meter or gauge lens covers. It may damage the lens cover.**

AIR FRESHENERS

Most air fresheners use a solvent that could affect the vehicle interior. If you use an air freshener, take the following precautions:

- Hanging-type air fresheners can cause permanent discoloration when they contact vehicle interior surfaces. Place the air freshener in a location that allows it to hang free and not contact an interior surface.
- Liquid-type air fresheners typically clip on the ventilators. These products can cause immediate damage and discoloration when spilled on interior surfaces.

Carefully read and follow the manufacturer's instructions before using air fresheners.

FLOOR MATS

WARNING

To avoid potential pedal interference that may result in a collision or injury:

- **NEVER place a floor mat on top of another floor mat in the driver front position.**
- **Use only genuine NISSAN floor mats specifically designed for use in your vehicle model. See your INFINITI retailer for more information.**
- **Properly position the mats in the floorwell using the floor mat positioning aid. See "Floor mat positioning aid" (P.7-6).**

The use of genuine NISSAN floor mats can extend the life of your vehicle carpet and make it easier to clean the interior. Mats should be maintained with regular cleaning and replaced if they become excessively worn.

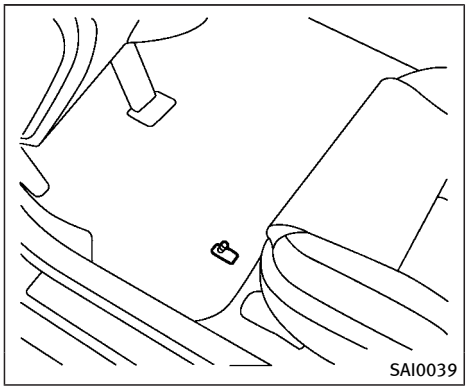

Floor mat positioning aid

This model includes front floor mat brackets to act as floor mat positioning aid. NISSAN floor mats have been specially designed for your vehicle model. The front floor mats have grommet holes in them. To install, simply position the mat by placing the floor mat bracket through the floor mat grommet hole while centering the mat in the floorwell.

Periodically check to make certain that the mats are properly positioned.

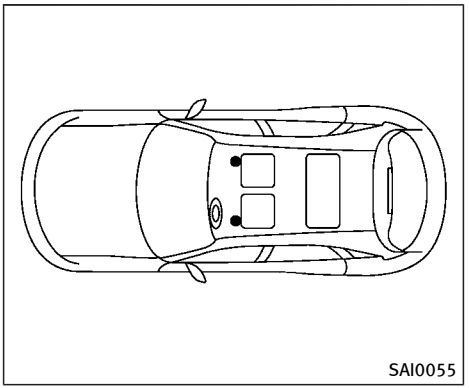

Bracket positions

The illustration shows the location of the floor mat brackets.

SEAT BELTS

The seat belts can be cleaned by wiping them with a sponge dampened in a mild soap solution. Allow the belts to dry completely before using them.

See “Seat belts” (P.1-12).

WARNING

Do not allow wet seat belts to roll up in the retractor. NEVER use bleach, dye, or chemical solvents to clean the seat belts, since these materials may severely weaken the seat belt webbing.

MOST COMMON FACTORS CONTRIBUTING TO VEHICLE CORROSION

- The accumulation of moisture-retaining dirt and debris in body panel sections, cavities, and other areas.
- Damage to paint and other protective coatings caused by gravel and stone chips or minor traffic accidents.

ENVIRONMENTAL FACTORS INFLUENCE THE RATE OF CORROSION

Moisture

Accumulation of sand, dirt and water on the vehicle body underside can accelerate corrosion. Wet floor coverings will not dry completely inside the vehicle, and should be removed for drying to avoid floor panel corrosion.

Relative humidity

Corrosion will be accelerated in areas of high relative humidity, especially those areas where the temperatures stay above freezing where atmospheric pollution exists, or where road salt is used.

Temperature

A temperature increase will accelerate the rate of corrosion to those parts which are not well ventilated.

Air pollution

Industrial pollution, the presence of salt in the air in coastal areas, or heavy road salt use will accelerate the corrosion process. Road salt will also accelerate the disintegration of paint surfaces.

TO PROTECT YOUR VEHICLE FROM CORROSION

- Wash and wax your vehicle often to keep the vehicle clean.
- Always check for minor damage to the paint and repair it as soon as possible.
- Keep drain holes at the bottom of the doors open to avoid water accumulation.
- Check the underbody for accumulation of sand, dirt or salt. If present, wash with water as soon as possible.

CAUTION

- **NEVER remove dirt, sand or other debris from the passenger compartment by washing it out with a hose. Remove dirt with a vacuum cleaner.**
- **Never allow water or other liquids to come in contact with electronic components inside the vehicle as this may damage them.**

Chemicals used for road surface deicing are extremely corrosive. They accelerate corrosion and deterioration of underbody components such as the exhaust system, fuel and brake lines, brake cables, floor pan and fenders.

In winter, the underbody must be cleaned periodically.

For additional protection against rust and corrosion, which may be required in some areas, consult an INFINITI retailer.

MEMO

8 Maintenance and do-it-yourself

Maintenance requirement 8-2
Scheduled maintenance 8-2
General maintenance 8-2
Where to go for service 8-2
General maintenance 8-2
Explanation of maintenance items 8-2
Maintenance precautions 8-5
Engine compartment check locations 8-7
VQ37VHR engine 8-7
Engine cooling system 8-7
Checking engine coolant level 8-8
Changing engine coolant 8-9
Engine oil 8-9
Checking engine oil level 8-9
Changing engine oil and filter 8-10
Automatic transmission fluid 8-12
Power steering fluid 8-12
Brake fluid 8-13
Brake fluid 8-13
Window washer fluid 8-14
Battery 8-15
Jump starting 8-16
Variable voltage control system 8-16
Drive Belts 8-17
Spark plugs 8-17
Replacing spark plugs 8-18
Air cleaner 8-18
Windshield wiper blades 8-19
Cleaning 8-19
Replacing 8-20
Rear window wiper blades 8-21
Brakes 8-21
Self-adjusting brakes 8-21
Brake pad wear warning 8-21
Fuses 8-22
Engine compartment 8-22
Passenger compartment 8-23
Intelligent Key battery replacement 8-24
Lights 8-26
Headlights 8-27
Exterior and interior lights 8-27
Wheels and tires 8-29
Tire pressure 8-29
Tire labeling 8-33
Types of tires 8-35
Tire chains 8-36
Changing wheels and tires 8-36

MAINTENANCE REQUIREMENT

Some day-to-day and regular maintenance is essential to maintain your vehicle's good mechanical condition, as well as its emission and engine performance.

It is the owner's responsibility to make sure that the scheduled maintenance, as well as general maintenance, is performed.

As the vehicle owner, you are the only one who can ensure that your vehicle receives the proper maintenance care. You are a vital link in the maintenance chain.

SCHEDULED MAINTENANCE

For your convenience, both required and optional scheduled maintenance items are described and listed in your "INFINITI Service and Maintenance Guide". You must refer to that guide to ensure that necessary maintenance is performed on your vehicle at regular intervals.

GENERAL MAINTENANCE

General maintenance includes those items which should be checked during normal day-to-day operation. They are essential for proper vehicle operation. It is your responsibility to perform these procedures regularly as prescribed.

Performing general maintenance checks requires minimal mechanical skill and only a few general automotive tools.

These checks or inspections can be done by yourself, a qualified technician or, if you prefer, an INFINITI retailer.

WHERE TO GO FOR SERVICE

If maintenance service is required or your vehicle appears to malfunction, have the systems checked and serviced by an INFINITI retailer.

INFINITI technicians are well-trained specialists and are kept up to date with the latest service information through technical bulletins, service tips, and in-retailership information systems. They are completely qualified to work on INFINITI vehicles **before** work begins.

You can be confident that an INFINITI retailer's service department performs the best job to meet the maintenance requirements on your vehicle.

GENERAL MAINTENANCE

During the normal day-to-day operation of the vehicle, general maintenance should be performed regularly as prescribed in this section. If you detect any unusual sounds, vibrations or smell, be sure to check for the cause or have an INFINITI retailer do it promptly. In addition, you should notify an INFINITI retailer if you think that repairs are required.

When performing any checks or maintenance work, see "Maintenance precautions" (P.8-5).

EXPLANATION OF MAINTENANCE ITEMS

Additional information on the following items with "*" is found later in this section.

Outside the vehicle

The maintenance items listed here should be performed from time to time, unless otherwise specified.

Doors and engine hood: Check that all doors and the engine hood, operate properly. Also ensure that all latches lock securely. Lubricate hinges, latches, latch pins, rollers and links if necessary. Make sure that the secondary latch keeps the hood from opening when the primary latch

is released.

When driving in areas using road salt or other corrosive materials, check lubrication frequently.

Lights*: Clean the headlights on a regular basis. Make sure that the headlights, stop lights, tail lights, turn signal lights, and other lights are all operating properly and installed securely. Also check headlight aim.

Road wheel nuts (lug nuts)*: When checking the tires, make sure no wheel nuts are missing, and check for any loose wheel nuts. Tighten if necessary.

Tire rotation*: Tires should be rotated every 5,000 miles (8,000 km).

Tires*: Check the pressure with a gauge often and always prior to long distance trips. If necessary, adjust the pressure in all tires, including the spare, to the pressure specified. Check carefully for damage, cuts or excessive wear.

Tire Pressure Monitoring System (TPMS) transmitter components: Replace the TPMS transmitter grommet seal, valve core and cap when the tires are replaced due to wear or age.

Tire, wheel alignment and balance: If the vehicle should pull to either side while driving on a straight and level road, or if you detect uneven or abnormal tire wear, there may be a need for wheel alignment.

If the steering wheel or seat vibrates at normal highway speeds, wheel balancing may be needed.

For additional information regarding tires, refer to “Important Tire Safety Information” (US) or “Tire Safety Information” (Canada) in the INFINITI Warranty Information Booklet.

Windshield: Clean the windshield on a regular basis. Check the windshield at least every six months for cracks or other damage. Have a damaged windshield repaired by a qualified repair facility.

Windshield wiper blades*: Check for cracks or wear if they do not wipe properly.

Inside the vehicle

The maintenance items listed here should be checked on a regular basis, such as when performing periodic maintenance, cleaning the vehicle, etc.

Accelerator pedal: Check the pedal for smooth operation and make sure the pedal does not catch or require uneven effort. Keep the floor mat away from the pedal.

Automatic transmission P (Park) mechanism: On a fairly steep hill, check that your vehicle is held securely with the shift lever in the P (Park) position without applying any brakes.

Brake pedal: Check the pedal for smooth operation. If the brake pedal suddenly goes down further than normal, the pedal feels spongy or the vehicle seems to take longer to stop, see an INFINITI retailer immediately. Keep the floor mat away from the pedal.

Brakes: Check that the brakes do not pull the vehicle to one side when applied.

Parking brake: Check the parking brake operation regularly. The vehicle should be securely held on a fairly steep hill with only the parking brake applied. If the parking brake needs adjusted, see an INFINITI retailer.

Seat belts: Check that all parts of the seat belt system (for example, buckles, anchors, adjuster and retractors) operate properly and smoothly, and are installed securely. Check the belt webbing for cuts, fraying, wear or damage.

Seats: Check seat position controls such as

seat adjusters, seatback recliner, etc. to ensure they operate smoothly and that all latches lock securely in every position. Check that the head restraints move up and down smoothly and that the locks (if so equipped) hold securely in all latched positions.

Steering wheel: Check for changes in the steering conditions, such as excessive free play, hard steering or strange noises.

Warning lights and chimes: Make sure that all warning lights and chimes are operating properly.

Windshield defroster: Check that the air comes out of the defroster outlets properly and in sufficient quantity when operating the heater or air conditioner.

Windshield wiper and washer*: Check that the wipers and washer operate properly and that the wipers do not streak.

Under the hood and vehicle

The maintenance items listed here should be checked periodically (for example, each time you check the engine oil or refuel).

Battery*: Check the fluid level in each cell. It should be between the MAX and MIN lines. Vehicles operated in high temperatures or under severe condition require frequent checks of the battery fluid level.

NOTE:

Care should be taken to avoid situations that can lead to potential battery discharge and potential no-start conditions such as:

1. **Installation or extended use of electronic accessories that consume battery power when the engine is not running (Phone chargers, GPS, DVD players, etc.)**
2. **Vehicle is not driven regularly and/or only driven short distances.**

In these cases, the battery may need to be charged to maintain battery health.

Brake fluid level*: Make sure that the brake fluid level is between the MAX and MIN lines on the reservoir.

Engine coolant level*: Check the coolant level when the engine is cold.

Engine drive belts*: Make sure that no belt is frayed, worn, cracked or oily.

Engine oil level*: Check the level after parking the vehicle on a level spot and turning off the engine. Wait more than 15 minutes for the oil to drain back into the oil pan.

Exhaust system: Make sure there are no loose supports, cracks or holes. If the sound of the exhaust seems unusual or there is a smell of exhaust fumes, immediately have the exhaust system inspected by an INFINITI retailer. (See “Precautions when starting and driving” (P.5-3) section for exhaust gas (carbon monoxide).)

Fluid leaks: Check under the vehicle for fuel, oil, water or other fluid leaks after the vehicle has been parked for a while. Water dripping from the air conditioner after use is normal. If you should notice any leaks or if gasoline fumes are evident, check for the cause and have it corrected immediately.

Power steering fluid level* and lines: Check the level when the fluid is cold, with the engine off. Check the lines for proper attachment, leaks, cracks, etc.

Radiator and hoses: Check the front of the radiator and clean off any dirt, insects, leaves, etc., that may have accumulated. Make sure the hoses have no cracks, deformation, rot or loose connections.

Underbody: The underbody is frequently exposed to corrosive substances such as those used on icy roads or to control dust.

It is very important to remove these substances, otherwise rust will form on the floor pan, frame, fuel lines and around the exhaust system. At the end of winter, the underbody should be thoroughly flushed with plain water, being careful to clean those areas where mud and dirt may accumulate. For additional information, see “Cleaning exterior” (P.7-2).

Windshield washer fluid*: Check that there is adequate fluid in the reservoir.

MAINTENANCE PRECAUTIONS

When performing any inspection or maintenance work on your vehicle, always take care to prevent serious accidental injury to yourself or damage to the vehicle. The following are general precautions which should be closely observed.

WARNING

- **Park the vehicle on a level surface, apply the parking brake securely and block the wheels to prevent the vehicle from moving. Move the shift lever to P (Park).**
- **Be sure the ignition switch is in the OFF or LOCK position when performing any parts replacement or repairs.**
- **Never connect or disconnect the battery or any transistorized component while the ignition switch is in the ON position.**
- **Never leave the engine or automatic transmission related component harnesses disconnected while the ignition switch is in the ON position.**
- **If you must work with the engine running, keep your hands, clothing, hair and tools away from moving fans, belts and any other moving parts.**
- **It is advisable to secure or remove any loose clothing and remove any jewelry, such as rings, watches, etc. before working on your vehicle.**
- **Always wear eye protection whenever you work on your vehicle.**
- **If you must run the engine in an enclosed space such as a garage, be sure there is proper ventilation for exhaust gases to escape.**
- **Never get under the vehicle while it is supported only by a jack. If it is necessary to work under the vehicle, support it with safety stands.**
- **Keep smoking materials, flame and sparks away from fuel tank and the battery.**
- **Your vehicle is equipped with an automatic engine cooling fan. It may come on at any time without warning, even if the ignition key is in the OFF position and the engine is not running. To avoid injury, always disconnect the negative battery cable before working near the fan.**
- **On gasoline engine models, the fuel filter or fuel lines should be serviced by an INFINITI retailer because the fuel lines**

are under high pressure even when the engine is off.

CAUTION

- **Do not work under the hood while the engine is hot. Turn the engine off and wait until it cools down.**
- **Avoid direct contact with used engine oil and coolant. Improperly disposed engine oil, coolant, and/or other vehicle fluids can damage the environment. Always conform to local regulations for disposal of vehicle fluid.**

This “8. Maintenance and do-it-yourself” section gives instructions regarding only those items which are relatively easy for an owner to perform.

A genuine INFINITI Service Manual is also available. (See “Owner’s Manual/Service Manual order information” (P.9-32).)

You should be aware that incomplete or improper servicing may result in operating difficulties or excessive emissions, and could affect your warranty coverage. **If in doubt about any servicing, we recommend that it be done by an INFINITI retailer.**

ENGINE COMPARTMENT CHECK LOCATIONS

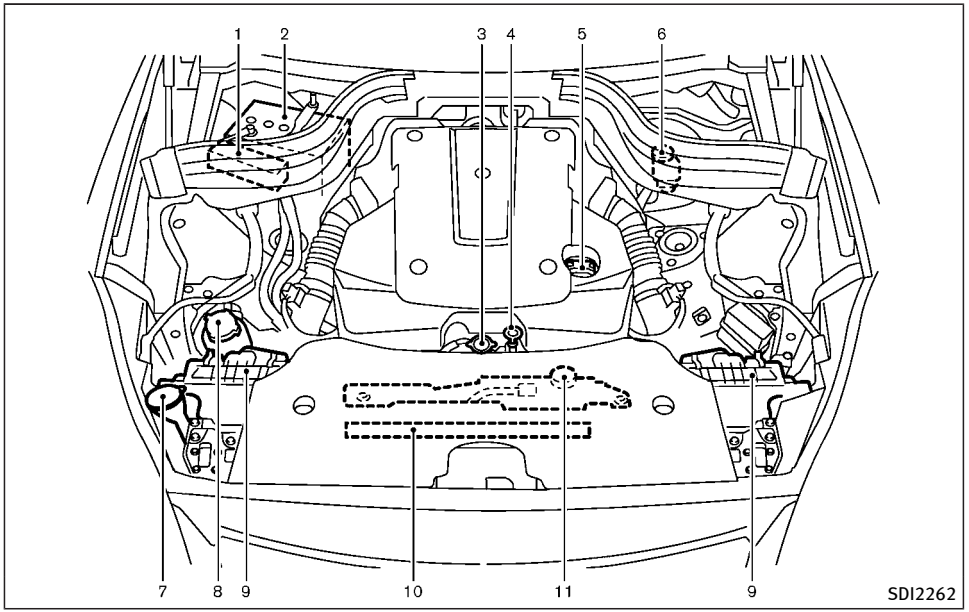

VQ37VHR ENGINE

1. Fuse/fusible link holder
2. Battery
3. Radiator filler cap
4. Engine oil dipstick
5. Engine oil filler cap
6. Brake fluid reservoir
7. Window washer fluid reservoir
8. Power steering fluid reservoir
9. Air cleaner
10. Drive belts
11. Coolant reservoir

ENGINE COOLING SYSTEM

The engine cooling system is filled at the factory with a pre-diluted mixture of 50% Genuine NISSAN Long Life Antifreeze/Coolant (blue) and 50% water to provide year-round anti-freeze and coolant protection. The antifreeze solution contains rust and corrosion inhibitors. Additional engine cooling system additives are not necessary.

WARNING

- **Never remove the radiator or coolant reservoir cap when the engine is hot. Wait until the engine and radiator cool down. Serious burns could be caused by high pressure fluid escaping from the radiator. See precautions in "If your vehicle overheats" (P.6-11) of this manual.**
- **The radiator is equipped with a pressure type radiator cap. To prevent engine damage, use only a genuine NISSAN radiator cap.**

CAUTION

- **Never use any cooling system additives such as radiator sealer. Additives may clog the cooling system and cause damage to the engine, transmission and/or cooling system.**
- **When adding or replacing coolant, be sure to use only Genuine NISSAN Long Life Antifreeze/Coolant (blue) or equivalent. Genuine NISSAN Long Life Antifreeze/Coolant (blue) is pre-diluted to provide antifreeze protection to –34°F (–37°C). If additional freeze protection is needed due to weather where you operate your vehicle, add Genuine NISSAN Long Life Antifreeze/Coolant (blue) concentrate following the directions on the container. If an equivalent coolant other than Genuine NISSAN Long Life Antifreeze/Coolant (blue) is used, follow the coolant manufacturer's instructions to maintain minimum antifreeze protection to –34°F (–37°C). The use of other types of coolant solutions other than Genuine NISSAN Long Life Antifreeze/Coolant (blue) or equivalent may damage the engine cooling system.**
- **The life expectancy of the factory-fill coolant is 105,000 miles (168,000 km) or 7 years. Mixing any other type of coolant other than Genuine NISSAN Long Life Antifreeze/Coolant (blue), including Genuine NISSAN Long Life Antifreeze/Coolant (green), or the use of non-distilled water will reduce the life expectancy of the factory-fill coolant. Refer to the INFINITI Service and Maintenance Guide for more details.**

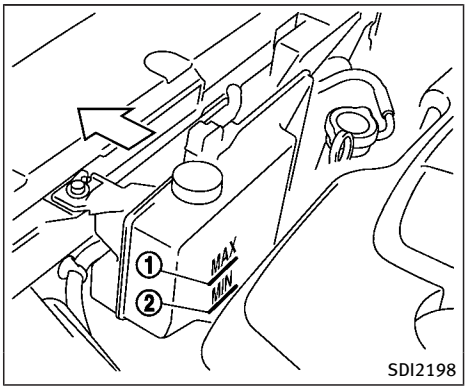

CHECKING ENGINE COOLANT LEVEL

Check the coolant level **in the reservoir tank when the engine is cold.** If the coolant level is below MIN ②, open the reservoir tank cap and add coolant up to the MAX ① level. If the reservoir tank is empty, check the coolant level in the radiator **when the engine is cold.** If there is insufficient coolant in the radiator, fill the radiator with coolant up to the filler opening and also add it to the reservoir tank up to the MAX level ①.

Tighten the cap securely after adding engine coolant.

If the cooling system requires coolant frequently, have it checked by an INFINITI retailer.

CHANGING ENGINE COOLANT

Major cooling system repairs should be performed by an INFINITI retailer. The service procedures can be found in the appropriate INFINITI Service Manual.

Improper servicing can result in reduced heater performance and engine overheating.

WARNING

- **To avoid the danger of being scalded, never change the coolant when the engine is hot.**
- **Never remove the radiator cap when the engine is hot. Serious burns could be caused by high pressure fluid escaping from the radiator.**
- **Avoid direct skin contact with used coolant. If skin contact is made, wash thoroughly with soap or hand cleaner as soon as possible.**
- **Keep coolant out of the reach of children and pets.**

Engine coolant must be disposed of properly. Check your local regulations.

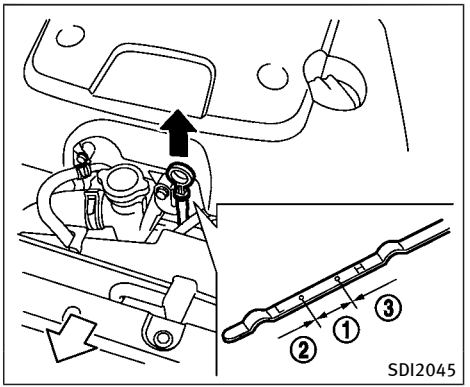

CHECKING ENGINE OIL LEVEL

1. Park the vehicle on a level surface and apply the parking brake.
2. Run the engine until it reaches operating temperature.
3. Turn off the engine. **Wait more than 15 minutes for the oil to drain back into the oil pan.**
4. Remove the dipstick and wipe it clean. Reinsert it all the way.
5. Remove the dipstick again and check the oil level. It should be within the range ①. If the oil level is below ②, remove the oil filler cap and pour

recommended oil through the opening. **Do not overfill ③.**

6. Recheck oil level with the dipstick.

It is normal to add some oil between oil maintenance intervals or during the break-in period, depending on the severity of operating conditions.

CAUTION

Oil level should be checked regularly. Operating the engine with an insufficient amount of oil can damage the engine, and such damage is not covered by warranty.

CHANGING ENGINE OIL AND FILTER

Vehicle set-up

1. Park the vehicle on a level surface and apply the parking brake.
2. Run the engine until it reaches operating temperature.
3. Turn the engine off and wait more than 15 minutes.
4. Raise and support the vehicle using a suitable floor jack and safety jack stands.
   - Place the safety jack stands under the vehicle jack-up points.
   - A suitable adapter should be attached to the jack stand saddle.
5. Remove the plastic engine undercover.
   a. Remove the small plastic clip at the center point of the undercover.
   b. Then remove the other bolts that hold the undercover in place.

CAUTION

Make sure the correct lifting and support points are used to avoid vehicle damage.

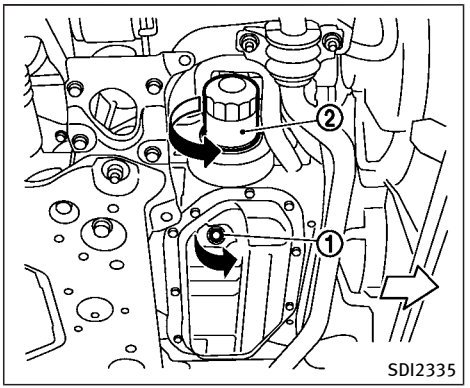

2WD models

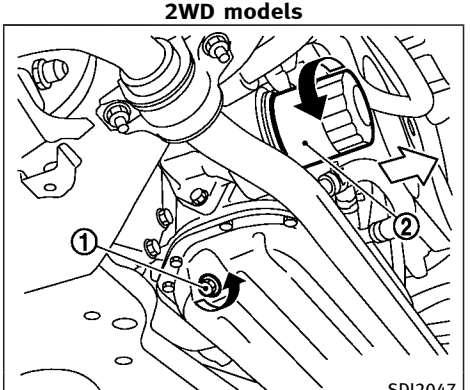

AWD models

Engine oil and filter

1. Place a large drain pan under the drain plug.
2. Remove the oil filler cap.
3. Remove the drain plug ① with a wrench and completely drain the oil.

CAUTION

Be careful not to burn yourself, as the engine oil is hot.

- **Waste oil must be disposed of properly.**
- **Check your local regulations.**

4. (Perform steps 4 to 7 only when the engine oil filter change is needed.)

   Loosen the oil filter ② with an oil filter wrench. Remove the oil filter by turning it by hand.
5. Wipe the engine oil filter mounting surface with a clean rag.

CAUTION

Be sure to remove any old rubber gasket remaining on the mounting surface of the engine. Failure to do so could lead to engine damage.

6. Coat the gasket on the new filter with clean engine oil.
7. Screw in the oil filter clockwise until a slight resistance is felt, then tighten additionally more than 2/3 turn.

   Oil filter tightening torque:
   11 to 15 ft-lb
   (14.7 to 20.5 N·m)
8. Clean and re-install the drain plug with a new washer. Securely tighten the drain plug with a wrench.

   Drain plug tightening torque:
   22 to 29 ft-lb
   (29 to 39 N·m)

   Do not use excessive force.
9. Refill engine with recommended oil and install the oil filler cap securely.

CAUTION

The dipstick must be inserted in place to prevent oil spillage from the dipstick hole while filling the engine with oil.

   See “Capacities and recommended fluids/lubricants” (P.9-2) for drain and refill capacity. The drain and refill capacity depends on the oil temperature and drain time. Use these specifications for reference only. Always use the dipstick to determine the proper amount of oil in the engine.
10. Start the engine and check for leakage around the drain plug and the oil filter. Correct as required.
11. Turn the engine off and wait more than 15 minutes. Check the oil level with the dipstick. Add engine oil if necessary.

After the operation

1. Install the engine undercover into position as the following steps.
   a. Pull the center of the small plastic clip out.
   b. Hold the engine undercover into position.
   c. Insert the clip through the undercover into the hole in the frame, then push the center of the clip in to lock the clip in place.
   d. Install the other bolts that hold the undercover in place. Be careful not

to strip the bolts or over-tighten them.

2. Lower the vehicle carefully to the ground.
3. Dispose of waste oil and filter properly.

WARNING

- **Prolonged and repeated contact with used engine oil may cause skin cancer.**
- **Try to avoid direct skin contact with used oil. If skin contact is made, wash thoroughly with soap or hand cleaner as soon as possible.**
- **Keep used engine oil out of reach of children.**

AUTOMATIC TRANSMISSION FLUID

Contact an INFINITI retailer if replacement is required.

CAUTION

- **Use only Genuine NISSAN Matic S ATF. Do not mix with other fluids.**
- **Using automatic transmission fluid other than Genuine NISSAN Matic S ATF will cause deterioration in driveability and automatic transmission durability, and may damage the automatic transmission, which is not covered by the INFINITI new vehicle limited warranty.**

POWER STEERING FLUID

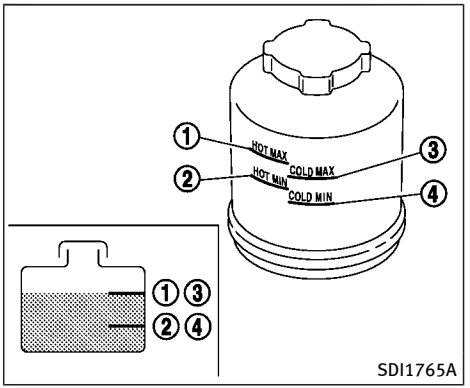

Check the fluid level in the reservoir.

The fluid level should be checked using the HOT range (①: HOT MAX., ②: HOT MIN.) at fluid temperatures of 122 to 176°F (50 to 80°C) or using the COLD range (③: COLD MAX., ④: COLD MIN.) at fluid temperatures of 32 to 86°F (0 to 30°C).

If the fluid is below the MIN line, add Genuine NISSAN PSF or equivalent. Remove the cap and fill through the opening.

BRAKE FLUID

CAUTION

- **Do not overfill.**
- **Use Genuine NISSAN PSF or equivalent.**

For further brake fluid specification information, see “Capacities and recommended fluids/lubricants” (P.9-2) of this manual.

WARNING

- **Use only new fluid from a sealed container. Old, inferior or contaminated fluid may damage the brake system. The use of improper fluids can damage the brake system and affect the vehicle’s stopping ability.**
- **Be sure to clean the filler cap before removing.**
- **Brake fluid is poisonous and should be stored carefully in marked containers out of the reach of children.**

CAUTION

Do not spill the fluid on painted surfaces. This will damage the paint. If fluid is spilled, wash the surface with water.

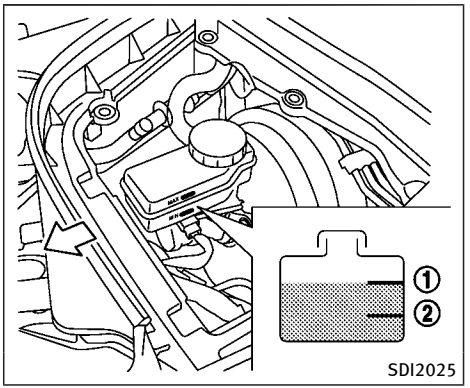

BRAKE FLUID

Check the fluid level in the reservoir. If the fluid is below the MIN line ② or the brake warning light comes on, add Genuine NISSAN Super Heavy Duty Brake Fluid or equivalent **DOT 3** fluid up to the MAX line ①. If fluid must be added frequently, the system should be checked by an INFINITI retailer.

WINDOW WASHER FLUID

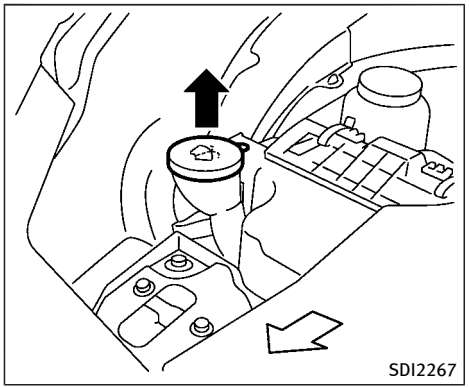

WARNING

Antifreeze is poisonous and should be stored carefully in marked containers out of the reach of children.

Fill the window washer fluid reservoir periodically. Add window washer fluid when the low washer fluid warning on the vehicle information display comes on.

To fill the window washer fluid reservoir, lift the cap off the reservoir tank and pour the window washer fluid into the tank opening.

Add a washer solvent to the washer for better cleaning. In the winter season, add a windshield washer antifreeze. Follow the manufacturer's instructions for the mixture ratio.

Refill the reservoir more frequently when driving conditions require an increased amount of window washer fluid.

Recommended fluid is Genuine NISSAN Windshield Washer Concentrate Cleaner & Antifreeze or equivalent.

CAUTION

- **Do not substitute engine anti-freeze coolant for window washer solution. This may result in damage to the paint.**
- **Do not fill the window washer reservoir tank with washer fluid concentrates at full strength. Some methyl alcohol based washer fluid concentrates may permanently stain the grille if spilled while filling the window washer reservoir tank.**
- **Pre-mix washer fluid concentrates with water to the manufacturer's recommended levels before pouring the fluid into the window washer reservoir tank.**

Do not use the window washer reservoir tank to mix the washer fluid concentrate and water.

BATTERY

- Keep the battery surface clean and dry. Clean the battery with a solution of baking soda and water.
- Make certain the terminal connections are clean and securely tightened.
- If the vehicle is not to be used for 30 days or longer, disconnect the negative (–) battery terminal cable to prevent discharging it.

NOTE:

Care should be taken to avoid situations that can lead to potential battery discharge and potential no-start conditions such as:

1. **Installation or extended use of electronic accessories that consume battery power when the engine is not running (Phone chargers, GPS, DVD players, etc.)**
2. **Vehicle is not driven regularly and/or only driven short distances.**

In these cases, the battery may need to be charged to maintain battery health.

WARNING

- **Do not expose the battery to flames or electrical sparks. Hydrogen gas generated by the battery is explosive. Do not allow battery fluid to contact your skin, eyes, fabrics, or painted surfaces. After touching a battery or battery cap, do not touch or rub your eyes. Thoroughly wash your hands. If the acid contacts your eyes, skin or clothing, immediately flush with water for at least 15 minutes and seek medical attention.**
- **Do not operate the vehicle if the fluid in the battery is low. Low battery fluid can cause a higher load on the battery which can generate heat, reduce battery life, and in some cases lead to an explosion.**
- **When working on or near a battery, always wear suitable eye protection and remove all jewelry.**
- **Battery posts, terminals and related accessories contain lead and lead compounds. Wash hands after handling.**
- **Keep the battery out of the reach of children.**

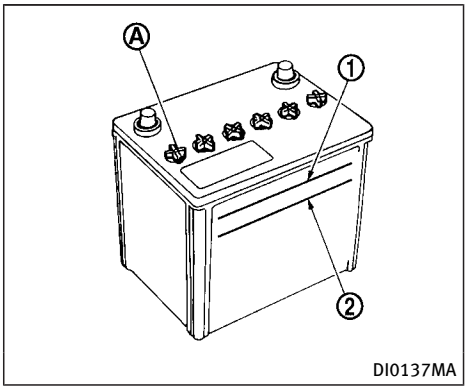

Check the fluid level in each cell (Remove the battery cover if it is necessary). It should be between the UPPER LEVEL ① and LOWER LEVEL ② lines.

If it is necessary to add fluid, add only distilled water to bring the level to the indicator in each filler opening. **Do not overfill.**

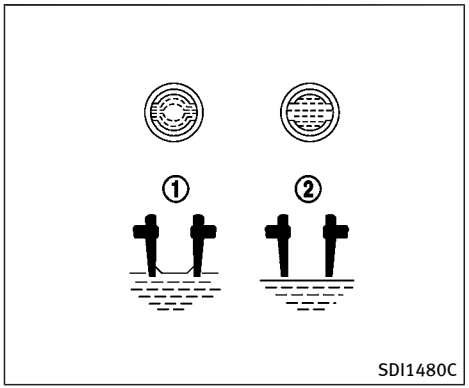

1. Remove the cell plugs Ⓐ.
2. Add distilled water up to the UPPER LEVEL ① line.

   If the side of the battery is not clear, check the distilled water level by looking directly above the cell; the condition ① indicates OK and the conditions ② needs more to be added.
3. Tighten cell plugs Ⓐ.

Vehicles operated in high temperatures or under severe conditions require frequent checks of the battery fluid level.

JUMP STARTING

If jump starting is necessary, see “Jump starting” (P.6-9). If the engine does not start by jump starting, the battery may have to be replaced. Contact an INFINITI retailer.

CAUTION

- **Do not ground accessories directly to the battery terminal. Doing so will bypass the variable voltage control system and the vehicle battery may not charge completely.**
- **Use electrical accessories with the engine running to avoid discharging the vehicle battery.**

The variable voltage control system measures the amount of electrical discharge from the battery and controls voltage generated by the generator.

DRIVE BELTS

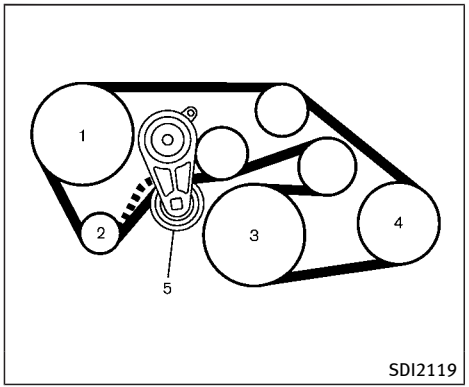

1. Power steering fluid pump
2. Alternator
3. Crankshaft pulley
4. Air conditioner compressor
5. Drive belt auto-tensioner

WARNING

Be sure the ignition switch is in the OFF or LOCK position before servicing drive belts. The engine could rotate unexpectedly.

1. Visually inspect each belt for signs of unusual wear, cuts, fraying or looseness. If the belt is in poor condition or loose, have it replaced or adjusted by an INFINITI retailer.
2. Have the belts checked regularly for condition and tension in accordance with the maintenance schedule in your "INFINITI Service and Maintenance Guide".

SPARK PLUGS

WARNING

Be sure the engine and the ignition switch are off and that the parking brake is engaged securely.

CAUTION

Be sure to use the correct socket to remove the spark plugs. An incorrect socket can damage the spark plugs.

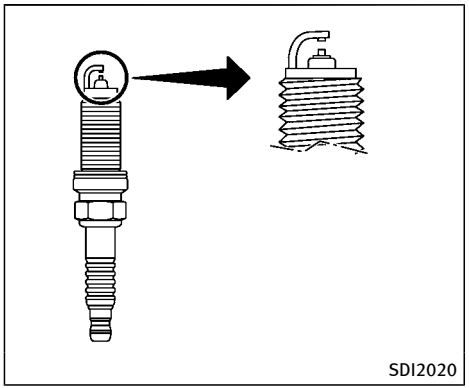

REPLACING SPARK PLUGS

If replacement is required, see an INFINITI retailer for servicing.

Iridium-tipped spark plugs

It is not necessary to replace the iridium-tipped spark plugs as frequently as the conventional type spark plugs since they will last much longer. Follow the maintenance schedule in “INFINITI Service and Maintenance Guide”, but do not reuse them by cleaning or regapping.

Always replace spark plugs with recommended or equivalent ones.

AIR CLEANER

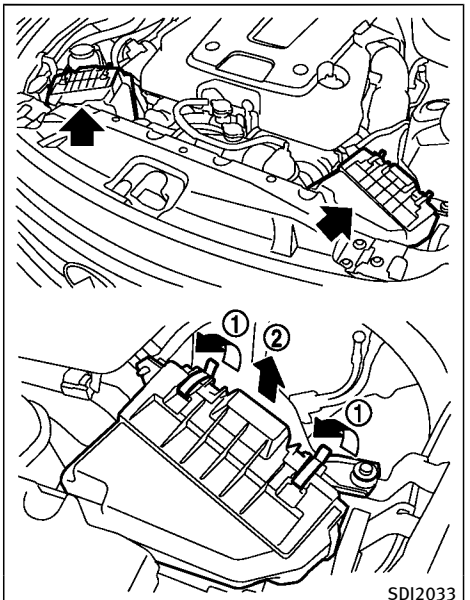

Remove the retainers ① as illustrated and pull out the filter element ②.

The filter element should not be cleaned and reused. Replace it according to the maintenance intervals. See “INFINITI Service and Maintenance Guide” for maintenance intervals. When replacing the filter,

wipe the inside of the air cleaner housing and the cover with a damp cloth.

WARNING

- **Operating the engine with the air cleaner removed can cause you or others to be burned. The air cleaner not only cleans the air, it stops flame if the engine backfires. If it isn't there, and the engine backfires, you could be burned. Do not drive with the air cleaner removed, and be careful when working on the engine with the air cleaner removed.**
- **Never pour fuel into the throttle body or attempt to start the engine with the air cleaner removed. Doing so could result in serious injury.**

CLEANING

If your windshield is not clear after using the windshield washer or if a wiper blade chatters when running, wax or other material may be on the blade or windshield.

Clean the outside of the windshield with a washer solution or a mild detergent. Your windshield is clean if beads do not form when rinsing with clear water.

Clean each blade by wiping it with a cloth soaked in a washer solution or a mild detergent. Then rinse the blade with clear water. If your windshield is still not clear after cleaning the blades and using the wiper, replace the blades.

Worn windshield wiper blades can damage the windshield and impair driver vision.

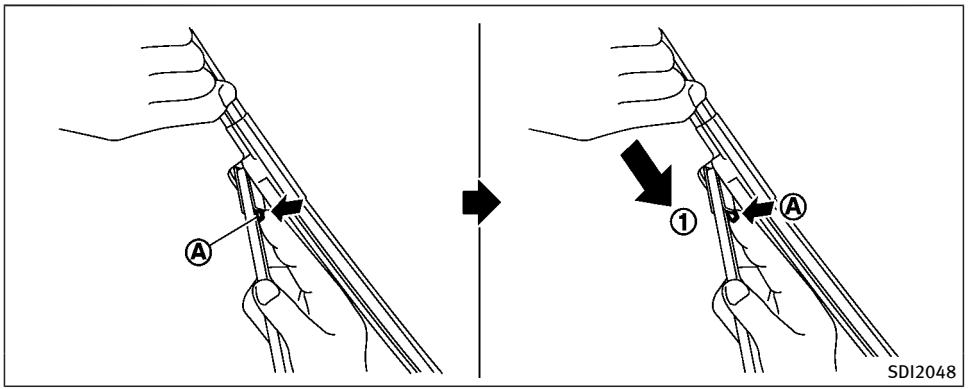

REPLACING

Replace the wiper blades if they are worn.

1. Pull the wiper arm.
2. Push the release tab Ⓐ, and then move the wiper blade down the wiper arm ① while pushing the release tab to remove.
3. Insert the new wiper blade onto the wiper arm until a click sounds.
4. Rotate the wiper blade so the dimple is in the groove.

CAUTION

- **After wiper blade replacement, return the wiper arm to its original position;**

  otherwise it may be damaged when the hood is opened.
- **Make sure the wiper blades contact the glass; otherwise the arm may be damaged from wind pressure.**

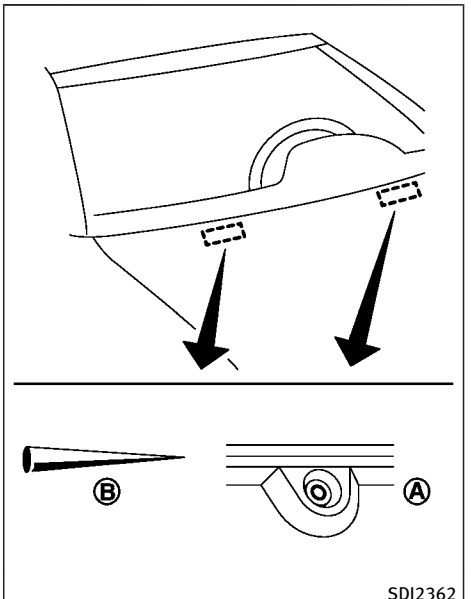

Be careful not to clog the washer nozzle Ⓐ. This may cause improper windshield washer operation. If the nozzle is clogged, remove any objects with a needle or small pin Ⓑ. Be careful not to damage the nozzle.

REAR WINDOW WIPER BLADES

Contact an INFINITI retailer if checking or replacement is required.

BRAKES

If the brakes do not operate properly, have the brakes checked by an INFINITI retailer.

SELF-ADJUSTING BRAKES

Your vehicle is equipped with self-adjusting brakes.

The disc-type brakes self-adjust every time the brake pedal is applied.

WARNING

See an INFINITI retailer for a brake system check if the brake pedal height does not return to normal.

BRAKE PAD WEAR WARNING

The disc brake pads have audible wear warnings. When a brake pad requires replacement, it will make a high pitched scraping sound when the vehicle is in motion. This scraping sound will first occur only when the brake pedal is depressed. After more wear of the brake pad, the sound will always be heard even if the brake pedal is not depressed. Have the brakes checked as soon as possible if the wear warning sound is heard.

Under some driving or climate conditions, occasional brake squeak, squeal or other noise may be heard. Occasional brake noise during light to moderate stops is normal and does not affect the function or performance of the brake system.

Proper brake inspection intervals should be followed. For additional information, see the maintenance log section of your “INFINITI Service and Maintenance Guide” for maintenance intervals.

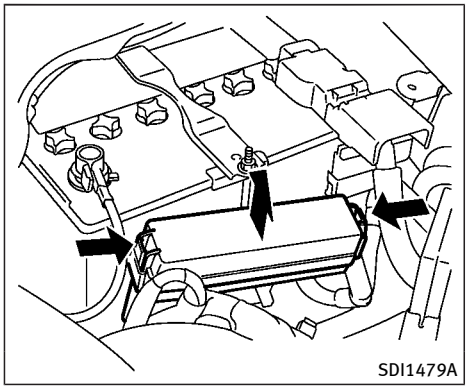

ENGINE COMPARTMENT

CAUTION

Never use a fuse of a higher or lower amperage rating than that specified on the fuse box cover. This could damage the electrical system or cause a fire.

If any electrical equipment does not operate, check for an open fuse.

1. Be sure the ignition switch is pushed to the OFF or LOCK position and the headlight switch is turned to OFF.
2. Open the engine hood and remove the cover on the battery.
3. Remove the fuse/fusible link holder cover.
4. Remove the fuse with the fuse puller.

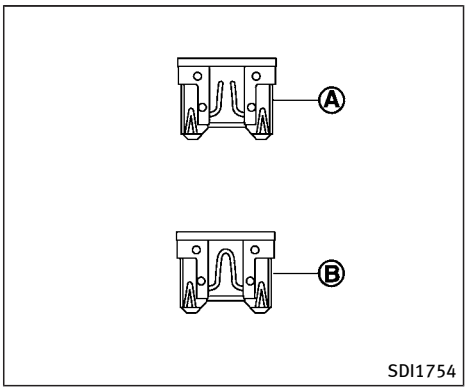

5. If the fuse is open Ⓐ, replace it with a new fuse Ⓑ. Spare fuses are stored in the passenger compartment fuse box.
6. If a new fuse also opens, have the electrical system checked and repaired by an INFINITI retailer.

Fusible links

If any electrical equipment does not operate and fuses are in good condition, check the fusible links. If any of these fusible links are melted, replace only with genuine INFINITI parts.

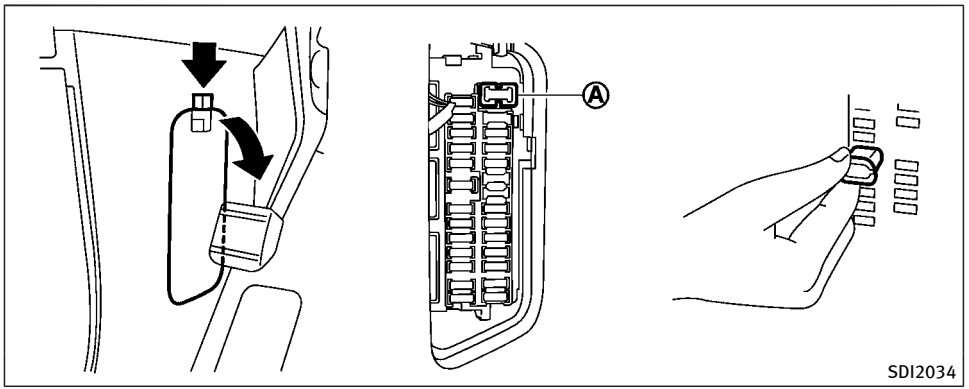

PASSENGER COMPARTMENT

CAUTION

Never use a fuse of a higher or lower amperage rating than that specified on the fuse box cover. This could damage the electrical system or cause a fire.

If any electrical equipment does not operate, check for an open fuse.

1. Be sure the ignition switch is pushed to the OFF or LOCK position and the headlight switch is turned to OFF.
2. Open the fuse box lid.
3. Remove the fuse with the fuse puller Ⓐ.
4. If the fuse is open, replace it with a new fuse.
5. If a new fuse also opens, have the electrical system checked and repaired by an INFINITI retailer. Spare fuses are stored in the fuse box.

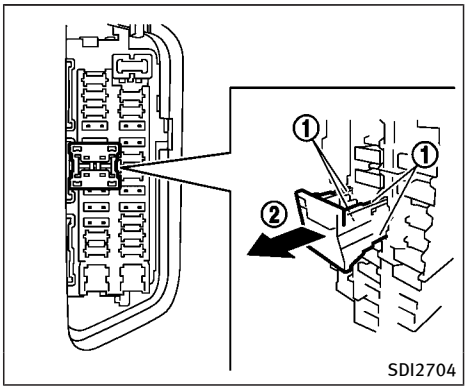

Extended storage fuse switch (if so equipped)

To reduce battery drain, the extended storage fuse switch comes from the factory switched off. Prior to delivery of your vehicle, the switch is pushed in (switched on) and should always remain on.

If any electrical equipment does not operate, remove the extended storage fuse switch and check for an open fuse.

NOTE:

If the extended storage fuse switch malfunctions, or if the fuse is open, it is not necessary to replace the switch. In this

case, remove the extended storage fuse switch and replace it with a new fuse of the same rating.

How to remove the extended storage fuse switch:

1. To remove the extended storage fuse switch, be sure the ignition switch is in the OFF or LOCK position.
2. Be sure the headlight switch is in the OFF position.
3. Remove the fuse box cover.
4. Pinch the locking tabs ① found on each side of the storage fuse switch.
5. Pull the storage fuse switch straight out from the fuse box ②.

CAUTION

Be careful not to allow children to swallow the battery and removed parts.

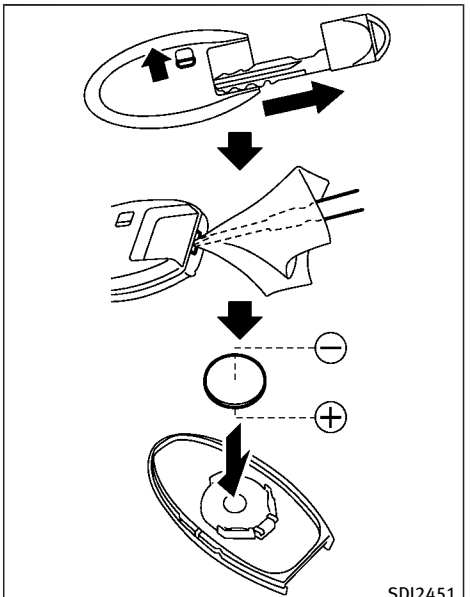

Replace the battery as follows:

1. Release the lock knob at the back of the Intelligent Key and remove the mechanical key.
2. Insert a flat-blade screwdriver Ⓐ wrapped with a cloth into the slit Ⓑ of the corner and twist it to separate the

upper part from the lower part.

3. Replace the battery with a new one.

   Recommended battery: CR2032 or equivalent.

   - Do not touch the internal circuit and electric terminals as it could cause a malfunction.
   - Hold the battery by the edges. Holding the battery across the contact points will seriously deplete the storage capacity.
   - Make sure that the + side faces the bottom of the case.

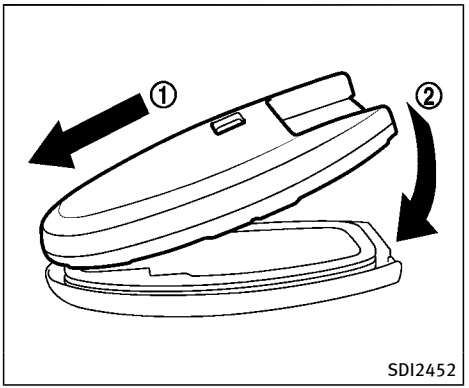

4. Align the tips of the upper and lower parts, and then push them together until it is securely closed.
5. Push the buttons two or three times to check its operation.

See an INFINITI retailer if you need any assistance for replacement.

FCC Notice:

For USA:

This device complies with Part 15 of the FCC Rules. Operation is subject to the following two conditions: (1) This device may not cause harmful interference, and (2) this device must accept any interference received, including interference that may cause undesired operation.

NOTE:

Changes or modifications not expressly approved by the party responsible for compliance could void the user's authority to operate the equipment.

For Canada:

This device complies with Industry Canada licence-exempt RSS standard(s). Operation is subject to the following two conditions: (1) this device may not cause interference, and (2) this device must accept any interference, including interference that may cause undesired operation of the device.

LIGHTS

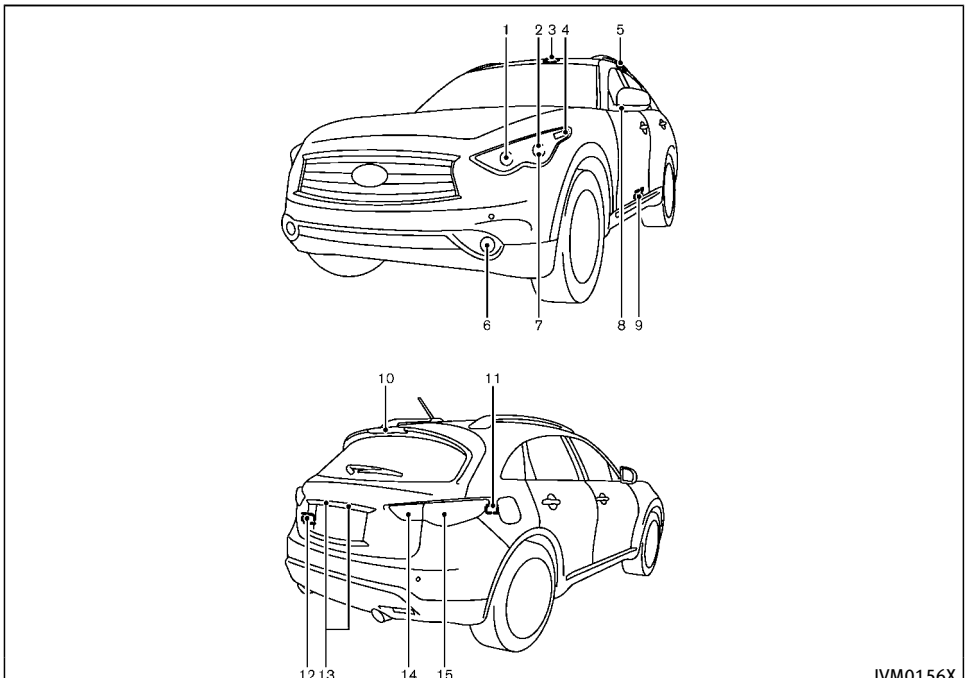

1. Headlight (high-beam, low-beam)
2. Front turn signal light
3. Map light
4. Front side marker light
5. Rear personal light
6. Fog light
7. Parking light
8. Puddle light
9. Step light
10. High-mounted stop light
11. Cargo light (sidewall)
12. Cargo light (lift gate)
13. License plate light
14. Back-up light
15. Rear combination light (tail/stop/turn signal/side marker light)

HEADLIGHTS

Replacing

Fog may temporarily form inside the lens of the exterior lights in the rain or in a car wash. A temperature difference between the inside and the outside of the lens causes the fog. This is not a malfunction. If large drops of water collect inside the lens, contact an INFINITI retailer.

Xenon headlight bulb:

If replacement is required, see an INFINITI retailer.

WARNING

HIGH VOLTAGE

When xenon headlights are on, they produce a high voltage. To prevent an electric shock, never attempt to modify or disassemble. Always have your xenon headlights replaced at an INFINITI retailer. For additional information, see "Headlight and turn signal switch" (P.2-38).

EXTERIOR AND INTERIOR LIGHTS

Item	Wattage (W)	Bulb No.
Headlight*		
High/Low beams (Xenon)	35	D2S
Front turn signal light*	21	WY21W
Fog light*	35	H8
Parking light*	5	W5W
Front side marker light*	5	W5W
Rear combination light*		
back-up	21	W21W
stop/tail	LED	—
side marker	5	W5W
turn signal*	21	W21W
License plate light*	5	W5W
Puddle light*	LED	—
Map light	8	—
Rear personal light	8	—
Cargo light	8	—
Vanity mirror light	1.4	—
Step light*	5	—
High-mounted stop light*	LED	—

*: See an INFINITI retailer for replacement.

NOTE: Always check with the Parts Department at an INFINITI retailer for the latest information about parts.

Replacement procedures

All other lights are either type A, B, C, D, E or F. When replacing a bulb, first remove the lens and/or cover.

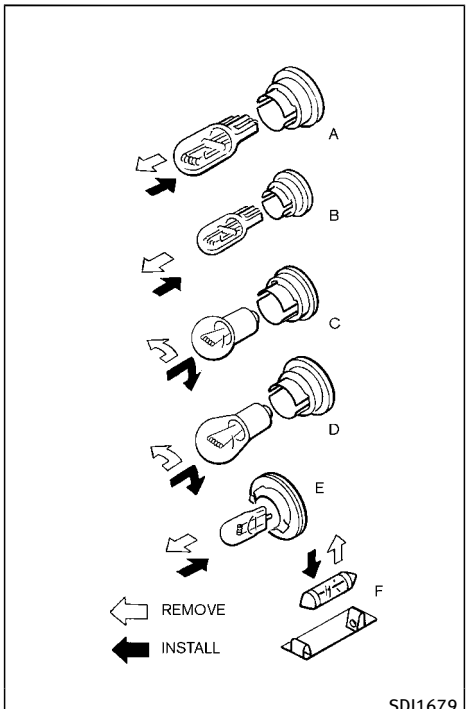

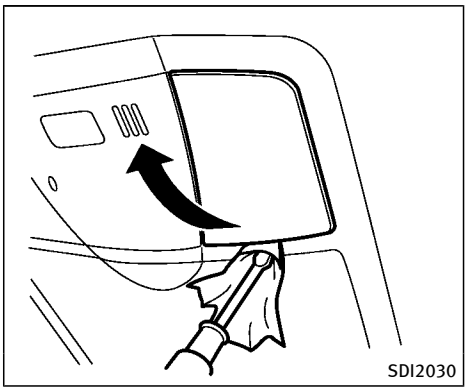

Map light

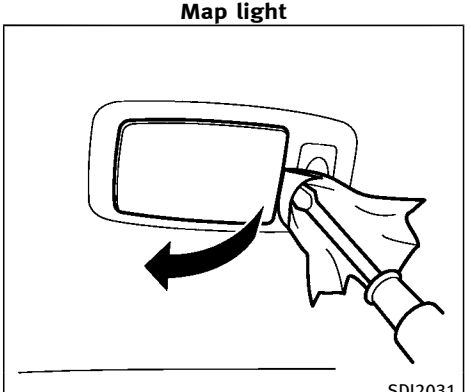

Rear personal light

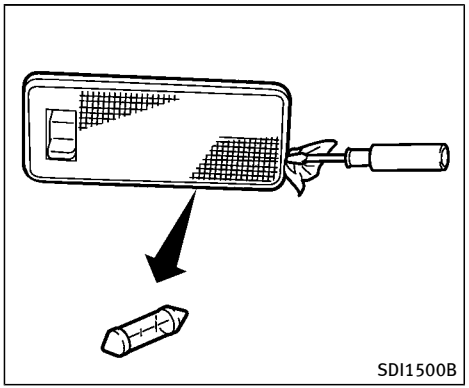

Cargo light

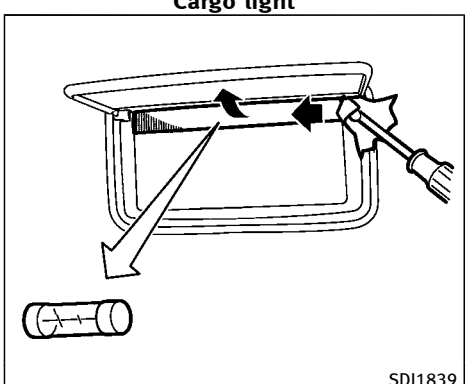

Vanity mirror light

If you have a flat tire, see “Flat tire” (P.6-3).

TIRE PRESSURE

Tire Pressure Monitoring System (TPMS)

This vehicle is equipped with the Tire Pressure Monitoring System (TPMS). It monitors tire pressure of all tires except the spare. When the low tire pressure warning light is lit and the CHECK TIRE PRESSURE warning appears on the vehicle information display, one or more of your tires is significantly under-inflated.

The TPMS will activate only when the vehicle is driven at speeds above 16 MPH (25 km/h). Also, this system may not detect a sudden drop in tire pressure (for example a flat tire while driving).

For more details, see “Low tire pressure warning light” (P.2-16), “Tire Pressure Monitoring System (TPMS)” (P.5-4) and “Tire Pressure Monitoring System (TPMS)” (P.6-3).

Tire inflation pressure

Check the pressure of the tires (including the spare) often and always prior to long distance trips. The recommended tire pressure specifications are shown on the Tire and Loading Information label under the “Cold Tire Pressure” heading. The Tire and Loading Information label is affixed to the driver side center pillar. Tire pressures should be checked regularly because:

- Most tires naturally lose air over time.
- Tires can lose air suddenly when driven over potholes or other objects or if the vehicle strikes a curb while parking.

The tire pressures should be checked when the tires are cold. The tires are considered COLD after the vehicle has been parked for 3 or more hours, or driven less than 1 mile (1.6 km) at moderate speeds.

Incorrect tire pressure, including under inflation, may adversely affect tire life and vehicle handling.

WARNING

- **Improperly inflated tires can fail suddenly and cause an accident.**
- **The Gross Vehicle Weight rating (GVWR) is located on the F.M.V.S.S./C.M.V.S.S. certification label. The vehicle weight capacity is indicated on the Tire and Loading Information label. Do not load your vehicle beyond this capacity. Overloading your vehicle may result in reduced tire life, unsafe operating conditions due to premature tire failure, or unfavorable handling characteristics and could also lead to a serious accident. Loading beyond the specified capacity may also result in failure of other vehicle components.**
- **Before taking a long trip, or whenever you heavily load your vehicle, use a tire pressure gauge to ensure that the tire pressures are at the specified level.**
- **For additional information regarding tires, refer to "Important Tire Safety Information" (US) or "Tire Safety Information" (Canada) in the Warranty Information Booklet.**

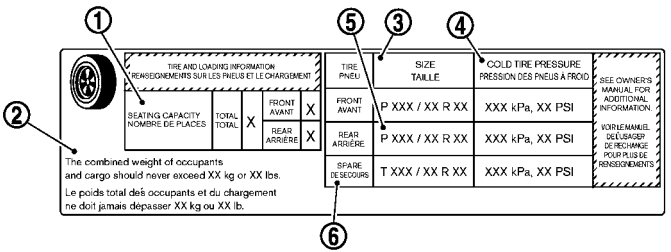

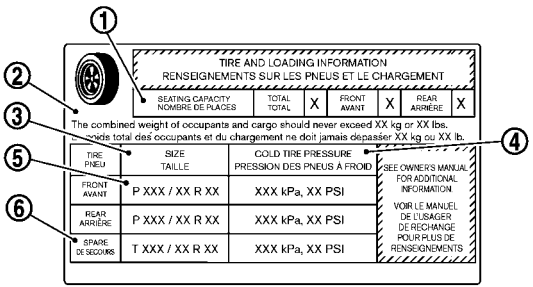

SDI2703

Tire and Loading Information label

① Seating capacity: The maximum number of occupants that can be seated in the vehicle.

② Vehicle load limit: See “Vehicle loading information” (P.9-15).

③ Original size: The size of the tires originally installed on the vehicle at the factory.

④ Cold tire pressure: Inflate the tires to this pressure when the tires are cold. Tires are considered COLD after the vehicle has been parked for 3 or more hours, or driven less than 1 mile (1.6 km) at moderate speeds. The recommended cold tire inflation is set by the manufacturer to provide the best balance of tire wear, vehicle handling, drive-ability, tire noise, etc., up to the vehicle’s GVWR.

⑤ Tire size — see “Tire labeling” (P.8-33).

⑥ Spare tire size or compact spare tire size (if so equipped)

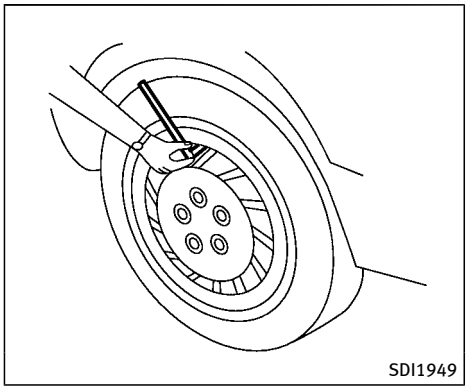

Checking the tire pressure

1. Remove the valve stem cap from the tire.
2. Press the pressure gauge squarely onto the valve stem. Do not press too hard or force the valve stem sideways, or air will escape. If the hissing sound of air escaping from the tire is heard while checking the pressure, reposition the gauge to eliminate this leakage.
3. Remove the gauge.
4. Read the tire pressure on the gauge stem and compare it to the specification shown on the Tire and Loading Information label.
5. Add air to the tire as needed. If too much air is added, press the core of the valve stem briefly with the tip of the gauge stem to release pressure. Recheck the pressure and add or release air as needed.
6. Install the valve stem cap.
7. Check the pressure of all other tires, including the spare.

	SIZE	COLD TIRE INFLATION PRESSURE
FRONT ORIGINAL TIRE	P265/60R18 109V	230 kPa, 33 PSI
	P265/50R20 106V	230 kPa, 33 PSI
	P265/45R21 104V	230 kPa, 33 PSI
REAR ORIGINAL TIRE	P265/60R18 109V	230 kPa, 33 PSI
	P265/50R20 106V	230 kPa, 33 PSI
	P265/45R21 104V	230 kPa, 33 PSI
SPARE TIRE	T175/90D18 110M	420 kPa, 60 PSI

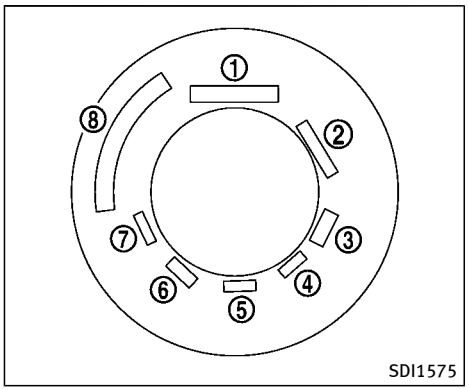

Example

TIRE LABELING

Federal law requires tire manufacturers to place standardized information on the sidewall of all tires. This information identifies and describes the fundamental characteristics of the tire and also provides the tire identification number (TIN) for safety standard certification. The TIN can be used to identify the tire in case of a recall.

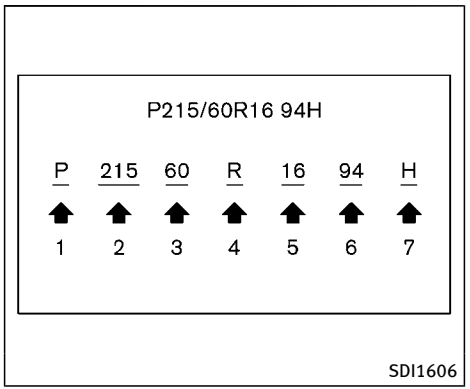

Example

① Tire size (example: P215/60R16 94H)

1. P: The "P" indicates the tire is designed for passenger vehicles. (Not all tires have this information.)
2. Three-digit number (215): This number gives the width in millimeters of the tire from sidewall edge to sidewall edge.
3. Two-digit number (60): This number, known as the aspect ratio, gives the tire's ratio of height to width.
4. R: The "R" stands for radial.
5. Two-digit number (16): This number is the wheel or rim diameter in inches.
6. Two- or three-digit number (94): This number is the tire's load index. It is a measurement of how much weight each tire can support. You may not find this information on all tires because it is not required by law.
7. H: Tire speed rating. You should not drive the vehicle faster than the tire speed rating.

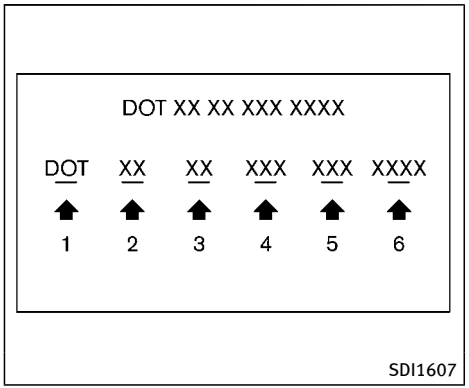

Example

② TIN (Tire Identification Number) for a new tire (example: DOT XX XX XXX XXXX)

1. DOT: Abbreviation for the “Department of Transportation”. The symbol can be placed above, below or to the left or right of the Tire Identification Number.
2. Two-digit code: Manufacturer’s identification mark
3. Two-digit code: Tire size
4. Three-digit code: Tire type code (Optional)
5. Three-digit code: Date of Manufacture
6. Four numbers represent the week and year the tire was built. For example, the numbers 3103 means the 31st week of 2003. If these numbers are missing, then look on the other sidewall of the tire.

③ Tire ply composition and material
The number of layers or plies of rubber-coated fabric in the tire.
Tire manufacturers also must indicate the materials in the tire, which include steel, nylon, polyester, and others.

④ Maximum permissible inflation pressure
This number is the greatest amount of air pressure that should be put in the tire. Do not exceed the maximum permissible inflation pressure.

⑤ Maximum load rating
This number indicates the maximum load in kilograms and pounds that can be carried by the tire. When replacing the tires on the vehicle, always use a tire that has the same load rating as the factory installed tire.

⑥ Term of “tubeless” or “tube type”
Indicates whether the tire requires an inner tube (“tube type”) or not (“tubeless”).

⑦ The word “radial”
The word “radial” is shown, if the tire has radial structure.

⑧ Manufacturer or brand name
Manufacturer or brand name is shown.

Other tire-related terminology:

In addition to the many terms that are defined throughout this section, Intended Outboard Sidewall is (1) the sidewall that contains a whitewall,

bears white lettering or bears manufacturer, brand and/or model name molding that is higher or deeper than the same molding on the other sidewall of the tire, or (2) the outward facing sidewall of an asymmetrical tire that has a particular side that must always face outward when mounted on a vehicle.

TYPES OF TIRES

WARNING

- **When changing or replacing tires, be sure all four tires are of the same type (Example: Summer, All Season or Snow) and construction. An INFINITI retailer may be able to help you with information about tire type, size, speed rating and availability.**
- **Replacement tires may have a lower speed rating than the factory equipped tires, and may not match the potential maximum vehicle speed. Never exceed the maximum speed rating of the tire.**
- **Replacing tires with those not originally specified by INFINITI could affect the proper operation of the TPMS.**
- **For additional information regarding tires, refer to "Important Tire Safety Information" (US) or "Tire Safety Information" (Canada) in the Warranty Information Booklet.**

All season tires

INFINITI specifies all season tires on some models to provide good performance all year, including snowy and icy road conditions. All Season tires are identified by ALL SEASON and/or M&S (Mud and Snow) on the tire sidewall. Snow tires have better snow traction than All Season tires and may be more appropriate in some areas.

Summer tires

INFINITI specifies summer tires on some models to provide superior performance on dry roads. Summer tire performance is substantially reduced in snow and ice. Summer tires do not have the tire traction rating M&S on the tire sidewall.

If you plan to operate your vehicle in snowy or icy conditions, INFINITI recommends the use of SNOW tires or ALL SEASON tires on all four wheels.

Snow tires

If snow tires are needed, it is necessary to select tires equivalent in size and load rating to the original equipment tires. If you do not, it can adversely affect the safety and handling of your vehicle.

Generally, snow tires will have lower speed ratings than factory equipped tires and may not match the potential maximum vehicle speed. Never exceed the maximum speed rating of the tire.

If you install snow tires, they must be the same size, brand, construction and tread pattern on all four wheels.

For additional traction on icy roads, studded tires may be used. However, some U.S. states and Canadian provinces prohibit their use. Check local, state and provincial laws before installing studded tires. Skid and traction capabilities of studded snow tires, on wet or dry surfaces, may be poorer than that of non-studded snow tires.

TIRE CHAINS

Use of tire chains may be prohibited according to location. Check the local laws before installing tire chains. When installing tire chains, make sure they are the proper size for the tires on your vehicle and are installed according to the chain manufacturer's suggestions. **Use only SAE Class S chains.** Class "S" chains are used on vehicles with restricted tire to vehicle clearance. Vehicles that can use Class "S" chains are designed to meet the SAE standard minimum clearances between the tire and the closest vehicle suspension or body component required to accommodate the use of a winter traction device (tire chains or cables). The minimum clearances are determined using the factory equipped tire size. Other types may damage your vehicle. Use chain tensioners when recommended by the tire chain manufacturer to ensure a tight fit. Loose end links of the tire chain must be secured or removed to prevent the possibility of whipping action damage to the fenders or underbody. If possible, avoid fully loading your vehicle when using tire chains. In addition, drive at a reduced speed. Otherwise, your vehicle may be damaged and/or vehicle handling and performance may be adversely affected.

Tire chains must be installed only on the rear wheels and not on the front wheels.

Never install tire chains on a TEMPORARY USE ONLY spare tire.

Do not use tire chains on dry roads. Driving with tire chains in such conditions can cause damage to the various mechanisms of the vehicle due to some overstress.

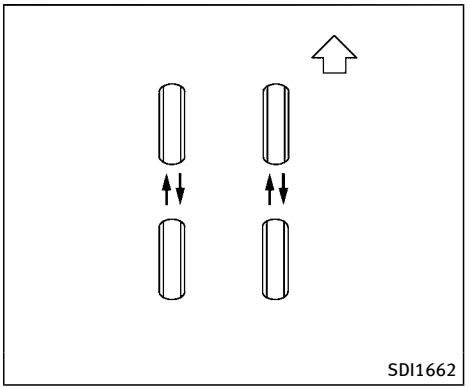

CHANGING WHEELS AND TIRES

Tire rotation

INFINITI recommends rotating the tires every 5,000 miles (8,000 km). (See "Flat tire" (P.6-3) for tire replacing procedures.)

As soon as possible, tighten the wheel nuts to the specified torque with a torque wrench.

Wheel nut tightening torque:
80 ft-lb (108 N·m)

The wheel nuts must be kept tightened to the specification at all times. It is recommended that wheel nuts be tightened to the specification at each tire rotation interval.

WARNING

- **After rotating the tires, check and adjust the tire pressure.**
- **Retighten the wheel nuts when the vehicle has been driven for 600 miles (1,000 km) (also in cases of a flat tire, etc.).**
- **Do not include the T-type spare tire or any other small size spare tire in the tire rotation.**
- **For additional information regarding tires, refer to "Important Tire Safety Information" (US) or "Tire Safety Information" (Canada) in the Warranty Information Booklet.**

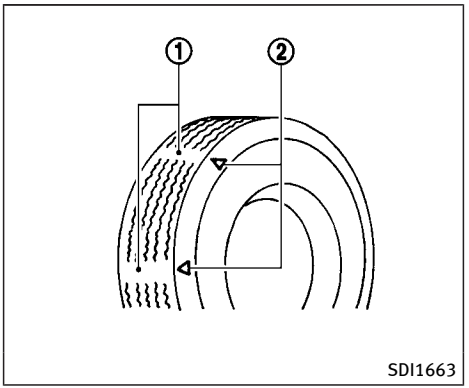

Tire wear and damage
1. Wear indicator
2. Wear indicator location mark

WARNING

- **Tires should be periodically inspected for wear, cracking, bulging or objects caught in the tread. If excessive wear, cracks, bulging or deep cuts are found, the tire(s) should be replaced.**
- **The original tires have built-in tread wear indicators. When wear indicators are visible, the tire(s) should be replaced.**
- **Tires degrade with age and use. Have tires, including the spare, over 6 years old checked by a qualified technician, because some tire damage may not be obvious. Replace the tires as necessary to prevent tire failure and possible personal injury.**
- **Improper service of the spare tire may result in serious personal injury. If it is necessary to repair the spare tire, contact an INFINITI retailer.**
- **For additional information regarding tires, refer to "Important Tire Safety Information" (US) or "Tire Safety Information" (Canada) in the Warranty Information Booklet.**

Replacing wheels and tires

When replacing a tire, use the same size, tread design, speed rating and load carrying capacity as originally equipped. (See "Specifications" (P.9-8) for recommended types and sizes of tires and wheels.)

WARNING

- **The use of tires other than those recommended or the mixed use of tires of different brands, construction (bias, bias-belted or radial), or tread patterns can adversely affect the ride, braking, handling, ground clearance, body-to-tire clearance, tire chain clearance, speedometer calibration, headlight aim and bumper height. Some of these effects may lead to accidents and could result in serious personal injury.**
- **For Two-Wheel Drive (2WD) models, if your vehicle was originally equipped with 4 tires that were the same size and you are only replacing 2 of the 4 tires, install the new tires on the rear axle. Placing new tires on the front axle may cause loss of vehicle control in some driving conditions and cause an accident and personal injury.**
- **If the wheels are changed for any reason, always replace with wheels which have the same off-set dimension. Wheels of a different off-set could cause premature tire wear, degrade vehicle handling characteristics and/or interference with the brake discs/drums. Such interference can lead to decreased braking efficiency and/or early brake pad/shoe wear. See "Wheels and tires" (P.9-9) of this manual for wheel off-set dimensions.**
- **When a spare tire is mounted or a wheel is replaced, the TPMS will not function and the low tire pressure warning light will flash for approximately 1 minute. The light will remain on after 1 minute. Contact your INFINITI retailer as soon as possible for tire replacement and/or system resetting.**
- **Replacing tires with those not originally specified by INFINITI could affect the proper operation of the TPMS.**
- **Do not install a damaged or deformed wheel or tire even if it has been repaired. Such wheels or tires could have structural damage and could fail without warning.**
- **The use of retread tire is not recommended.**
- **For additional information regarding tires, refer to "Important Tire Safety Information" (US) or "Tire Safety Information" (Canada) in the Warranty Information Booklet.**

All-Wheel Drive (AWD) models

CAUTION

- **Always use tires of the same type, size, brand, construction (bias, bias-belted or radial), and tread pattern on all four wheels. Failure to do so may result in a circumference difference between tires on the front and rear axles which will cause excessive tire wear and may damage the transmission, transfer case and differential gears.**
- **ONLY use spare tires specified for the AWD model.**

If excessive tire wear is found, it is recommended that all four tires be re-

placed with tires of the same size, brand, construction and tread pattern. The tire pressure and wheel alignment should also be checked and corrected as necessary. Contact an INFINITI retailer.

Wheel balance

Unbalanced wheels may affect vehicle handling and tire life. Even with regular use, wheels can get out of balance. Therefore, they should be balanced as required.

Wheel balance service should be performed with the wheels off the vehicle. Spin balancing the wheels on the vehicle could lead to mechanical damage.

For additional information regarding tires, refer to "Important Tire Safety Information" (US) or "Tire Safety Information" (Canada) in the INFINITI Warranty Information Booklet.

Care of wheels

See "Cleaning exterior" (P.7-2) for details about care of the wheels.

Spare tire (TEMPORARY USE ONLY (T-type) spare tire)

When a spare tire is mounted (TEMPORARY USE ONLY or conventional), the TPMS will not function.

Observe the following precautions if the T-type spare tire must be used, otherwise your vehicle could be damaged or involved in an accident.

WARNING

- **The T-type spare tire should be used for emergency use. It should be replaced with the standard tire at the first opportunity to avoid possible tire or differential damage.**
- **Drive carefully while the TEMPORARY USE ONLY spare tire is installed. Avoid sharp turns and abrupt braking while driving.**
- **Periodically check spare tire inflation pressure. Always keep the pressure of the TEMPORARY USE ONLY spare tire at 60 psi (420 kPa, 4.2 bar). Always keep the pressure of the full size spare tire (if so equipped) at the recommended pressure for standard tires, as indicated on the Tire and Loading Information label. For Tire and Loading Information label location, see "Tire and Loading Information label" in the index of this manual.**
- **With the TEMPORARY USE ONLY spare tire installed do not drive your vehicle at speeds faster than 50 MPH (80 km/h).**
- **When driving on roads covered with snow or ice, the TEMPORARY USE ONLY spare tire should be used on the front wheels and original tire used on the rear wheels (drive wheels). Use tire chains only on the two rear original tires.**
- **Tire tread of the TEMPORARY USE ONLY spare tire will wear at a faster rate than the standard tire. Replace the spare tire as soon as the tread wear indicators appear.**
- **Do not use the spare tire on other vehicles.**
- **Do not use more than one spare tire at the same time.**
- **Do not tow a trailer when the TEMPORARY USE ONLY spare tire is installed.**

CAUTION

- **Do not use tire chains on a TEMPORARY USE ONLY spare tire. Tire chains will not fit properly and may cause damage to the vehicle.**

- **Because the TEMPORARY USE ONLY spare tire is smaller than the original tire, ground clearance is reduced. To avoid damage to the vehicle, do not drive over obstacles. Also do not drive the vehicle through an automatic car wash since it may get caught.**

9 Technical and consumer information

Capacities and recommended fluids/lubricants.... 9-2
Fuel information.... 9-4
Engine oil and oil filter recommendation.... 9-6
Air conditioning system refrigerant and lubricant recommendations.... 9-7
Specifications.... 9-8
Engine.... 9-8
Wheels and tires.... 9-9
Dimensions.... 9-10
When traveling or registering your vehicle in another country.... 9-11
Vehicle identification.... 9-11
Vehicle Identification Number (VIN) plate.... 9-11
Vehicle identification number (chassis number).... 9-11
Engine serial number.... 9-12
F.M.V.S.S./C.M.V.S.S. certification label.... 9-12
Emission control information label.... 9-12
Tire and Loading Information label.... 9-13
Air conditioner specification label.... 9-13
Installing front license plate.... 9-14
Vehicle loading information.... 9-15
Terms.... 9-15
Vehicle load capacity.... 9-17
Securing the load.... 9-18
Loading tips.... 9-18
Measurement of weights.... 9-19
Towing a trailer.... 9-19
Maximum load limits.... 9-19
Maximum Gross Vehicle Weight (GVW)/ Maximum Gross Axle Weight (GAW).... 9-21
Towing load/specification.... 9-23
Towing safety.... 9-23
Flat towing.... 9-27
Uniform tire quality grading.... 9-28
Treadwear.... 9-28
Traction AA, A, B and C.... 9-28
Temperature A, B and C.... 9-28
Emission control system warranty.... 9-29
Reporting safety defects.... 9-30
Readiness for Inspection/Maintenance (I/M) test.... 9-31
Event Data Recorders (EDR).... 9-31
Owner's Manual/Service Manual order information.... 9-32

CAPACITIES AND RECOMMENDED FLUIDS/ LUBRICANTS

The following are approximate capacities. The actual refill capacities may be a little different. When refilling, follow the procedure instructed in the "8. Maintenance and do-it-yourself" section to determine the proper refill capacity.

				Capacity (Approximate)			Recommended specifications
				US measure	Imp measure	Liter	
Fuel				23-3/4 gal	19-3/4 gal	90	See "Fuel information" (P.9-4).
Engine oil							For additional information, see "Engine oil" (P.8-9) for changing engine oil. ● Genuine NISSAN engine oil or equivalent ● **INFINITI recommends Genuine NISSAN Ester Engine Oil available at INFINITI retailers.** ● Engine oil with API Certification Mark ● Viscosity SAE 5W-30 ● For additional information, see "Engine oil and oil filter recommendation" (P.9-6).
	Drain and refill	With oil filter change	VQ37VHR	5-1/8 qt	4-3/8 qt	4.9	
		Without oil filter change	VQ37VHR	4-7/8 qt	4 qt	4.6	
Cooling system							Pre-diluted Genuine NISSAN Long Life Antifreeze/Coolant (blue) or equivalent
		With reservoir	VQ37VHR	10 qt	8-3/8 qt	9.5	
			VQ37VHR (models with towing package for Canada)	10-5/8 qt	8-3/4 qt	10	
		Reservoir	VQ37VHR	7/8 qt	3/4 qt	0.8	
Automatic transmission fluid				—	—	—	● Genuine NISSAN Matic S ATF ● **Using automatic transmission fluid other than Genuine NISSAN Matic S ATF will cause deterioration in driveability and automatic transmission durability, and may damage the automatic transmission, which is not covered by the INFINITI new vehicle limited warranty.**
Front differential gear oil				—	—	—	● Genuine NISSAN Differential Oil Hypoid Super GL-5 80W-90 or API GL-5 Viscosity SAE 80W-90 ● For hot climates, viscosity SAE 90 is suitable for ambient temperatures above 32°F (0°C).
Rear differential gear oil			VQ37VHR without towing package	—	—	—	● Genuine NISSAN Differential Oil Hypoid Super GL-5 80W-90 or API GL-5, Viscosity SAE 80W-90 ● For hot climates, viscosity SAE 90 is suitable for ambient temperatures above 32°F (0°C).
			VQ37VHR with towing package	—	—	—	● API GL-5 synthetic gear oil, Viscosity SAE 75W-90 ● See an INFINITI retailer for service for synthetic oil.

	Capacity (Approximate)			Recommended specifications
	US measure	Imp measure	Liter	
Transfer fluid	—	—	—	• Genuine NISSAN Matic J ATF • Using transfer fluid other than Genuine NISSAN Matic J ATF will cause deterioration in driveability and transfer durability, and may damage the transfer, which is not covered by the INFINITI new vehicle limited warranty.
Power steering fluid (PSF)	Refill to the proper oil level according to the instructions in the “8. Maintenance and do-it-yourself” section.			• Genuine NISSAN PSF or equivalent • DEXRON™VI type ATF may also be used.
Brake fluid				Genuine NISSAN Super Heavy Duty Brake Fluid* or equivalent DOT 3 *: Available in mainland U.S.A. through an INFINITI retailer.
Multi-purpose grease	—	—	—	NLGI No. 2 (Lithium soap base)
Air conditioning system refrigerant	—	—	—	• HFC-134a (R-134a) • For additional information, see “Vehicle identification” (P.9-11) for air conditioner specification label.
Air conditioning system lubricants	—	—	—	• NISSAN A/C System Oil • Type S or exact equivalent
Window washer fluid	—	—	—	Genuine NISSAN Windshield Washer Concentrate Cleaner & Antifreeze or equivalent

FUEL INFORMATION

Use unleaded premium gasoline with an octane rating of at least 91 AKI (Anti-Knock Index) number (Research octane number 96).

If unleaded premium gasoline is not available, unleaded regular gasoline with an octane rating of at least 87 AKI number (Research octane number 91) may be temporarily used, but only under the following precautions:

- Have the fuel tank filled only partially with unleaded regular gasoline, and fill up with unleaded premium gasoline as soon as possible.
- Avoid full throttle driving and abrupt acceleration.

Use unleaded premium gasoline for maximum vehicle performance.

CAUTION

- **Using a fuel other than that specified could adversely affect the emission control system, and may also affect warranty coverage.**
- **Under no circumstances should a leaded gasoline be used, because this will damage the three-way catalyst.**
- **Do not use E-15 or E-85 fuel in your vehicle. Your vehicle is not designed to run on E-15 or E-85 fuel. Using E-15 or E-85 fuel in a vehicle not specifically designed for E-15 or E-85 fuel can adversely affect the emission control devices and systems of the vehicle. Damage caused by such fuel is not covered by the INFINITI new vehicle limited warranty.**
- **U.S. government regulations require ethanol dispensing pumps to be identified by a small, square, orange and black label with the common abbreviation or the appropriate percentage for that region.**

Gasoline specifications

INFINITI recommends using gasoline that meets the World-Wide Fuel Charter (WWFC) specifications where it is available. Many of the automobile manufacturers developed this specification to improve emission system and vehicle performance. Ask your service station manager if the gasoline meets the World-Wide Fuel Charter (WWFC) specifications.

Reformulated gasoline

Some fuel suppliers are now producing reformulated gasolines. These gasolines are specially designed to reduce vehicle emissions. INFINITI supports efforts towards cleaner air and suggests that you use reformulated gasoline when available.

Gasoline containing oxygenates

Some fuel suppliers sell gasoline containing oxygenates such as ethanol, MTBE and methanol with or without advertising their presence. INFINITI does not recommend the use of fuels of which the oxygenate content and the fuel compatibility for your INFINITI cannot be readily determined. If in doubt, ask your service station manager.

If you use oxygenate-blend gasoline, please take the following precautions as the usage of such fuels may cause vehicle performance problems and/or fuel system damage.

- **The fuel should be unleaded and have an octane rating no lower than that recommended for unleaded gasoline.**
- **If an oxygenate-blend, excepting a methanol blend, is used, it should contain no more than 10% oxygenate. (MTBE may, however, be added up to**

15%.)

- **E-15 fuel contains more than 10% oxygenate. E-15 fuel will adversely affect the emission control devices and systems of the vehicle and should not be used. Damage caused by such fuel is not covered by the INFINITI new vehicle limited warranty.**
- **If a methanol blend is used, it should contain no more than 5% methanol (methyl alcohol, wood alcohol). It should also contain a suitable amount of appropriate cosolvents and corrosion inhibitors. If not properly formulated with appropriate cosolvents and corrosion inhibitors, such methanol blends may cause fuel system damage and/or vehicle performance problems. At this time, sufficient data is not available to ensure that all methanol blends are suitable for use in INFINITI vehicles.**

If any undesirable driveability problems such as engine stalling or hard hot starting are experienced after using oxygenate-blend fuels, immediately change to a non-oxygenate fuel or a fuel with a low blend of MTBE.

Take care not to spill gasoline during refueling. Gasoline containing oxygenates can cause paint damage.

E-15 fuel

E-15 fuel is a mixture of approximately 15% fuel ethanol and 85% unleaded gasoline. E-15 can only be used in vehicles designed to run on E-15 fuel. Do not use E-15 in your vehicle. U.S. government regulations require fuel ethanol dispensing pumps to be identified with small, square, orange and black label with the common abbreviation or the appropriate percentage for that region.

E-85 fuel

E-85 fuel is a mixture of approximately 85% fuel ethanol and 15% unleaded gasoline. E-85 can only be used in a Flexible Fuel Vehicle (FFV). Do not use E-85 fuel in your vehicle. U.S. government regulations require fuel ethanol dispensing pumps to be identified by a small, square, orange and black label with the common abbreviation or the appropriate percentage for that region.

Aftermarket fuel additives

INFINITI does not recommend the use of any aftermarket fuel additives (Example: fuel injector cleaner, octane booster, intake valve deposit removers, etc.) which are sold commercially. Many of these additives intended for gum, varnish or deposit removal may contain active solvent or similar ingredients that can be harmful to the fuel system and engine.

Octane rating tips

Using unleaded gasoline with an octane rating lower than recommended above can cause persistent, heavy spark knock. (Spark knock is a metallic rapping noise.) If severe, this can lead to engine damage. If you detect a persistent heavy spark knock even when using gasoline of the stated octane rating, or if you hear steady spark knock while holding a steady speed on level roads, have an INFINITI retailer correct the condition. Failure to correct the condition is misuse of the vehicle, for which INFINITI is not responsible.

Incorrect ignition timing will result in knocking, after-run or overheating. This in turn may cause excessive fuel consumption or damage to the engine. If any of the

above symptoms are encountered, have your vehicle checked at an INFINITI retailer or other competent service facility.

However, now and then you may notice light spark knock for a short time while accelerating or driving up hills. This is no cause for concern, because you get the greatest fuel benefit when there is light spark knock for a short time under heavy engine load.

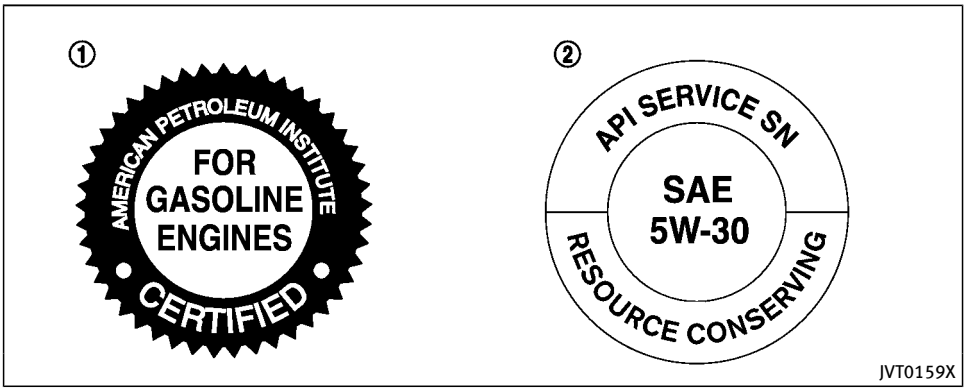

1. API certification mark
2. API service symbol

ENGINE OIL AND OIL FILTER RECOMMENDATION

Selecting the correct oil

It is essential to choose the correct grade, quality, and viscosity engine oil to ensure satisfactory engine life and performance, see “Capacities and recommended fluids/lubricants” (P.9-2). INFINITI recommends the use of an energy conserving oil in order to improve fuel economy.

Select only engine oils that meet the American Petroleum Institute (API) certification or International Lubricant Standardization and Approval Committee (ILSAC) certification and SAE viscosity standard. These oils have the API certification mark on the front of the container. Oils which do not have the specified quality label should not be used as they could cause engine damage.

Oil additives

INFINITI does not recommend the use of oil additives. The use of an oil additive is not necessary when the proper oil type is used and maintenance intervals are followed.

Oil which may contain foreign matter or has been previously used should not be used.

Oil viscosity

The engine oil viscosity or thickness changes with temperature. Because of this, it is important that the engine oil viscosity be selected based on the temperatures at which the vehicle will be operated before the next oil change. Choosing an oil viscosity other than that recommended could cause serious engine damage.

Selecting the correct oil filter

Your new vehicle is equipped with a high-quality genuine NISSAN oil filter. When replacing, use the genuine oil filter or its equivalent for the reason described in change intervals.

Change intervals

The oil and oil filter change intervals for your engine are based on the use of the specified quality oils and filters. Oil and filter other than the specified quality, or oil and filter change intervals longer than recommended could reduce engine life. Damage to engines caused by improper maintenance or use of incorrect oil and filter quality and/or viscosity is not covered by the new INFINITI vehicle limited warranties.

Your engine was filled with a high quality engine oil when it was built. You do not have to change the oil before the first recommended change interval. Oil and filter change intervals depend upon how you use your vehicle. Operation under the following conditions may require more frequent oil and filter changes.

- repeated short distance driving at cold outside temperatures,
- driving in dusty conditions,
- extensive idling,
- towing a trailer,
- stop and go “rush hour” traffic,

Refer to the “INFINITI Service and Maintenance Guide” for the maintenance schedule.

AIR CONDITIONING SYSTEM REFRIGERANT AND LUBRICANT RECOMMENDATIONS

The air conditioning system in your INFINITI vehicle must be charged with the refrigerant HFC-134a (R-134a) and the lubricant, NISSAN A/C system oil Type S or the exact equivalents.

CAUTION

The use of any other refrigerant or lubricant will cause severe damage to the air conditioning system and will require the replacement of all air conditioner system components.

The refrigerant HFC-134a (R-134a) in your INFINITI vehicle will not harm the earth’s ozone layer. Although this refrigerant does not affect the earth’s atmosphere, certain governmental regulations require the recovery and recycling of any refrigerant during automotive air conditioning system service. Your INFINITI retailer has the trained technicians and equipment needed to recover and recycle your air conditioning system refrigerant.

Contact an INFINITI retailer when servicing your air conditioning system.

SPECIFICATIONS

ENGINE

Model		VQ37VHR
Type		Gasoline, 4-cycle
Cylinder arrangement		6-cylinder, V-slanted at 60°
Bore × Stroke	in (mm)	3.760 × 3.385 (95.5 × 86.0)
Displacement	cu in (cm^3)	225.54 (3,696)
Firing order		1-2-3-4-5-6
Idle speed	rpm	See the emission control information label on the underside of the hood.
Ignition timing (B.T.D.C.)	degree/rpm	
Spark plug	Standard	FXE24HR-11
Spark plug gap (Normal)	in (mm)	0.043 (1.1)
Camshaft operation		Timing chain

This spark ignition system complies with the Canadian standard ICES-002.

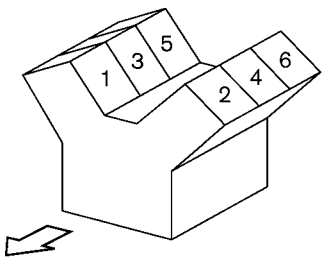

STI0425

WHEELS AND TIRES

Road wheel

Type	Size	Offset in (mm)
Conventional	18 × 8J	1.97 (50)
	20 × 8J	
	21 × 9-1/2J	
Spare	18 × 4-1/2T	1.18 (30)

Tire

Type	Size	Pressure PSI (kPa) [Cold]
Conventional	P265/60R18	33 (230)
	P265/50R20	
	P265/45R21	
Spare (T-type)	T175/90D18	60 (420)

DIMENSIONS

Overall length (With front license plate)	in (mm)	191.3 (4,860)
Overall width	in (mm)	75.9 (1,925)
Overall height	in (mm)	65.0 (1,650)*1 66.1 (1,680)*2
Front tread	in (mm)	64.4 (1,635)
Rear tread	in (mm)	64.6 (1,640)
Wheelbase	in (mm)	113.6 (2,885)

*1: Model without roof rack
*2: Model with roof rack

WHEN TRAVELING OR REGISTERING YOUR VEHICLE IN ANOTHER COUNTRY

If you plan to travel in another country, you should first find out if the fuel available is suitable for your vehicle's engine.

Using fuel with too low an octane rating may cause engine damage. All gasoline vehicles must be operated with unleaded gasoline. Therefore, avoid taking your vehicle to areas where appropriate fuel is not available.

When transferring the registration of your vehicle to another country, state, province or district, it may be necessary to modify the vehicle to meet local laws and regulations.

The laws and regulations for motor vehicle emission control and safety standards vary according to the country, state, province or district; therefore, vehicle specifications may differ.

When any vehicle is to be taken into another country, state, province or district and registered, its modifications, transportation, and registration are the responsibility of the user. INFINITI is not responsible for any inconvenience that may result.

VEHICLE IDENTIFICATION

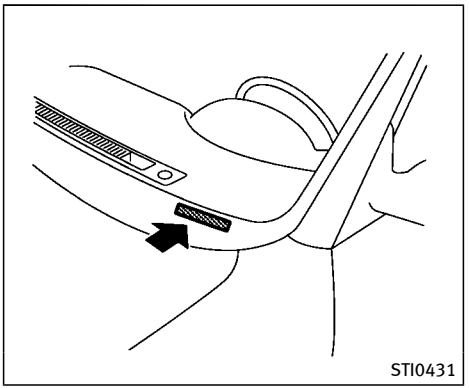

VEHICLE IDENTIFICATION NUMBER (VIN) PLATE

The vehicle identification number plate is attached as shown. This number is the identification for your vehicle and is used in the vehicle registration.

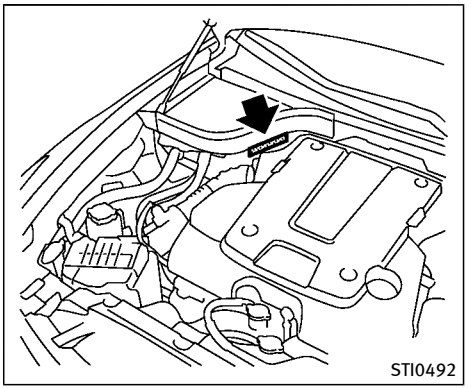

VEHICLE IDENTIFICATION NUMBER (chassis number)

The number is stamped as shown in the engine compartment.

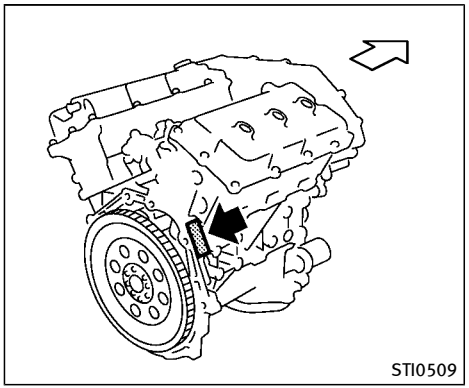

ENGINE SERIAL NUMBER

The number is stamped on the engine as shown.

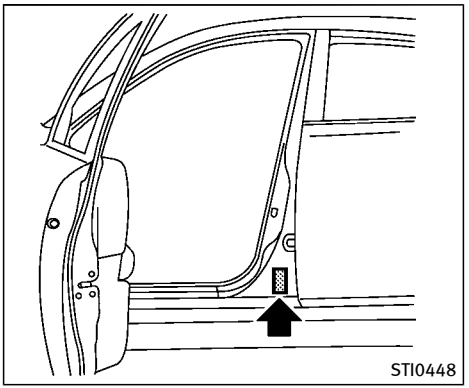

F.M.V.S.S./C.M.V.S.S. CERTIFICATION LABEL

The Federal/Canadian Motor Vehicle Safety Standards (F.M.V.S.S./C.M.V.S.S.) certification label is affixed as shown. This label contains valuable vehicle information, such as: Gross Vehicle Weight Ratings (GVWR), Gross Axle Weight Rating (GAWR), month and year of manufacture, Vehicle Identification Number (VIN), etc. Review it carefully.

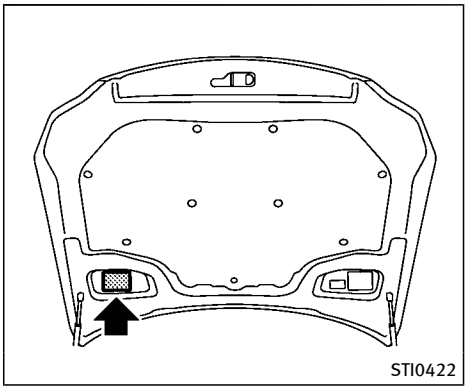

EMISSION CONTROL INFORMATION LABEL

The emission control information label is attached as shown.

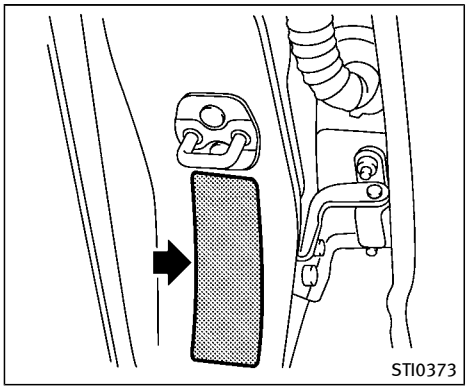

TIRE AND LOADING INFORMATION LABEL

The cold tire pressure is shown on the Tire and Loading Information label affixed to the pillar as illustrated.

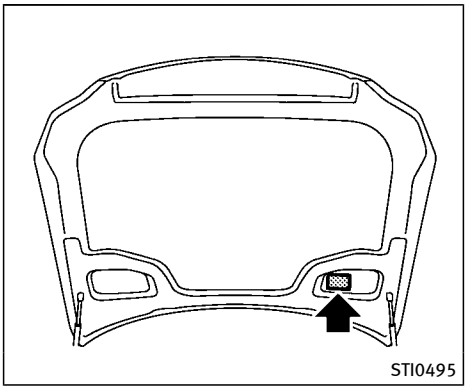

AIR CONDITIONER SPECIFICATION LABEL

The air conditioner specification label is attached as shown.

INSTALLING FRONT LICENSE PLATE

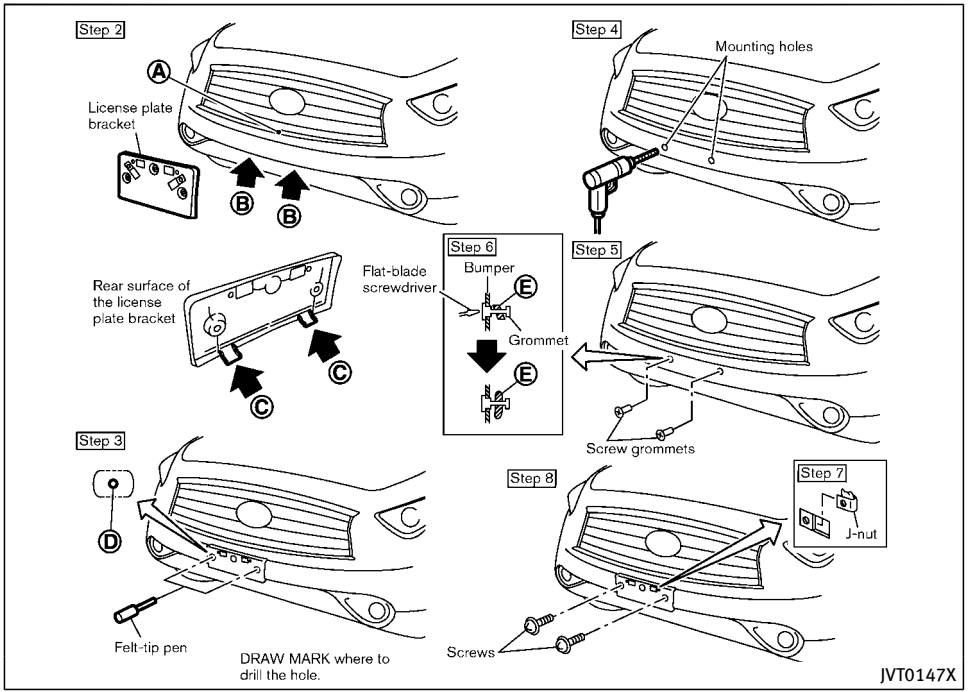

Use the following steps to mount the license plate.

Before mounting the license plate, confirm that the following parts are enclosed in the plastic bag.

Only use the recommended mounting position, otherwise Intelligent Cruise Control (ICC) sensor obstruction (if so equipped) may result.

- License plate bracket
- J-nut × 2
- Screw × 2
- Screw grommet × 2

1. Park the vehicle on flat, level ground.
2. Locate the center position indicator Ⓐ on the lower part of the grille. Line up the marks under the top of the front bumper Ⓑ with the tabs Ⓒ on the license plate bracket. Hold the license plate bracket in place.
3. Mark the center of the hole Ⓓ with a felt-tip pen.
4. Carefully drill two pilot holes using a 0.39 in (10 mm) drill bit at the marked locations. **(Be sure that the drill only goes through the bumper fascia.)**

5. Insert grommets into the hole on the fascia.
6. Insert a flat-blade screwdriver into the grommet hole to add 90° turn onto the part Ⓔ.
7. Insert a J-nut into the license plate bracket before placing the license plate bracket on the fascia.
8. Install the license plate bracket with screws.
9. Install the license plate with bolts that are no longer than 0.55 in (14 mm).

WARNING

- **It is extremely dangerous to ride in a cargo area inside the vehicle. In a collision, people riding in these areas are more likely to be seriously injured or killed.**
- **Do not allow people to ride in any area of vehicle that is not equipped with seats and seat belts.**
- **Be sure everyone in your vehicle is in a seat and using a seat belt properly.**

TERMS

It is important to familiarize yourself with the following terms before loading your vehicle:

- Curb Weight (actual weight of your vehicle) - vehicle weight including: standard and optional equipment, fluids, emergency tools, and spare tire assembly. This weight **does not** include passengers and cargo.
- GVW (Gross Vehicle Weight) - curb weight plus the combined weight of passengers and cargo.
- GVWR (Gross Vehicle Weight Rating) - maximum total combined weight of the unloaded vehicle, passengers, luggage, hitch, trailer tongue load and any other optional equipment. This information is located on the F.M.V.S.S./C.M.V.S.S. label.
- GAWR (Gross Axle Weight Rating) - maximum weight (load) limit specified for the front or rear axle. This information is located on the F.M.V.S.S./C.M.V.S.S. label.
- GCWR (Gross Combined Weight Rating) - The maximum total weight rating of the vehicle, passengers, cargo, and trailer.
- Vehicle Capacity Weight, Load limit, Total load capacity - maximum total weight limit specified

of the load (passengers and cargo) for the vehicle. This is the maximum combined weight of occupants and cargo that can be loaded into the vehicle. If the vehicle is used to tow a trailer, the trailer tongue weight must be included as part of the cargo load. This information is located on the Tire and Loading Information label.

- Cargo capacity - permissible weight of cargo, the weight of total occupants weight subtracted from the load limit.

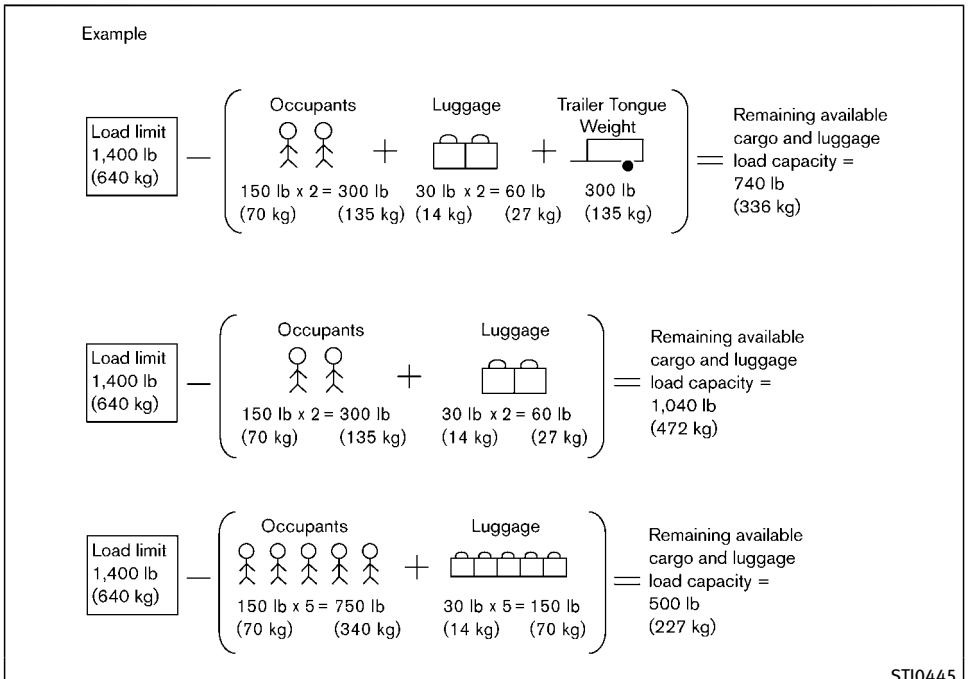

VEHICLE LOAD CAPACITY

Do not exceed the load limit of your vehicle shown as “The combined weight of occupants and cargo” on the Tire and Loading Information label. Do not exceed the number of occupants shown as “Seating Capacity” on the Tire and Loading Information label.

To get “the combined weight of occupants and cargo”, add the weight of all occupants, then add the total luggage weight. Examples are shown in the illustration.

Steps for determining correct load limit

1. Locate the statement “The combined weight of occupants and cargo should never exceed XXX kg or XXX lbs” on your vehicle’s placard.
2. Determine the combined weight of the driver and passengers that will be riding in your vehicle.
3. Subtract the combined weight of the driver and passengers from XXX kg or XXX lbs.
4. The resulting figure equals the available amount of cargo and luggage load capacity. For example, if the XXX amount equals 1400 lbs. and there will be five 150 lb. passengers in your vehicle, the amount of available cargo and luggage load capacity is 650 lbs. (1400 – 750 (5 x 150) = 650 lbs) or (640 – 340 (5 x 70) = 300 kg.)
5. Determine the combined weight of luggage and cargo being loaded on the vehicle. That weight may not safely exceed the available cargo and luggage load capacity calculated in Step 4.
6. If your vehicle will be towing a trailer, load from your trailer will be transferred to your vehicle. Consult this manual to determine how this reduces the available cargo and luggage load capacity of your vehicle.

Before driving a loaded vehicle, confirm that you do not exceed the Gross Vehicle Weight Rating (GVWR) or the Gross Axle Weight Rating (GAWR) for your vehicle. (See “Measurement of weights” (P.9-19).)

Also check tires for proper inflation pressures. See the Tire and Loading Information label.

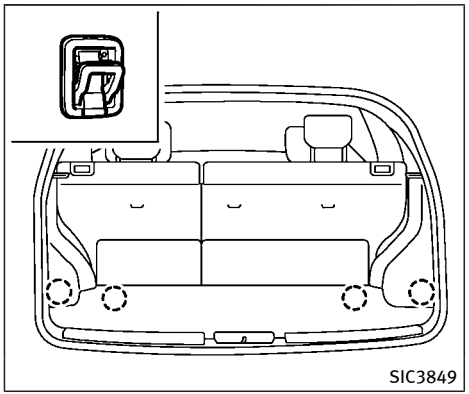

SECURING THE LOAD

There are tie down hooks located in the cargo area as shown. The tie down hooks can be used to secure cargo with ropes or other types of straps.

Do not apply a total load of more than 22 lb. (98 N) to a single hook when securing cargo.

WARNING

- **Properly secure all cargo with ropes or straps to help prevent it from sliding or shifting. Do not place cargo higher than the seatbacks. In a sudden stop or collision, unsecured cargo could cause personal injury.**
- **The child restraint top tether strap may be damaged by contact with items in the cargo area. Secure any items in the cargo area. Your child could be seriously injured or killed in a collision if the top tether strap is damaged.**
- **Do not load your vehicle any heavier than the GVWR or the maximum front and rear GAWRs. If you do, parts of your vehicle can break, tire damage could occur, or it can change the way your vehicle handles. This could result in loss of control and cause personal injury.**

LOADING TIPS

- The GVW must not exceed GVWR or GAWR as specified on the F.M.V.S.S./C.M.V.S.S. certification label.
- Do not load the front and rear axle to the GAWR. Doing so will exceed the GVWR.

WARNING

- **Properly secure all cargo to help prevent it from sliding or shifting. Do not place cargo higher than the seatbacks. In a sudden stop or collision, unsecured cargo could cause personal injury.**
- **Do not load your vehicle any heavier than the GVWR or the maximum front and rear GAWRs. If you do, parts of your vehicle can break, tire damage could occur, or it can change the way your vehicle handles. This could result in loss of control and cause personal injury.**
- **Overloading could not only shorten the life of your vehicle and the tires, but also could lead to hazardous vehicle handling and long braking distance. This may cause a premature tire malfunction, which could result in a serious accident**

and personal injury. Failures caused by overloading are not covered by the vehicle's warranty.

MEASUREMENT OF WEIGHTS

Secure loose items to prevent weight shifts that could affect the balance of your vehicle. When the vehicle is loaded, drive to a scale and weigh the front and the rear wheels separately to determine axle loads. Individual axle loads should not exceed either of the gross axle weight ratings (GAWR). The total of the axle loads should not exceed the gross vehicle weight rating (GVWR). These ratings are given on the vehicle certification label. If weight ratings are exceeded, move or remove items to bring all weights below the ratings.

WARNING

Overloading or improper loading of a trailer and its cargo can adversely affect vehicle handling, braking and performance and may lead to accidents.

CAUTION

- **Do not tow a trailer or haul a heavy load for the first 500 miles (800 km). Your engine, axle or other parts could be damaged.**
- **For the first 500 miles (800 km) that you tow a trailer, do not drive over 50 MPH (80 km/h) and do not make starts at full throttle. This helps the engine and other parts of your vehicle wear in at the heavier loads.**

Your new vehicle was designed to be used primarily to carry passengers and cargo. Remember that towing a trailer places additional loads on your vehicle's engine, drivetrain, steering, braking and other systems.

An INFINITI Towing Guide (U.S. only) is available on the website at www.InfinitiUSA.com. This guide includes information on trailer towing capability and the special equipment required for proper towing.

MAXIMUM LOAD LIMITS

Maximum trailer loads

Never allow the total trailer load to exceed the value specified in the "Towing Load/Specification" chart. The total trailer load equals trailer weight plus its cargo weight.

- **When towing a trailer load of 1,000 lbs (454 kg) or more, trailers with a brake system MUST be used.**

The maximum GCWR (Gross Combined Weight Rating) should not exceed the value specified in the following "Towing Load/Specification" chart.

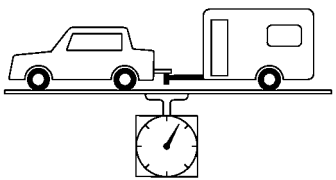

STI0541

The GCWR equals the combined weight of the towing vehicle (including passengers and cargo) plus the total trailer load. Towing loads greater than these or using improper towing equipment could adversely affect vehicle handling, braking and performance.

The ability of your vehicle to tow a trailer is not only related to the maximum trailer loads, but also the places you plan to tow. Tow weights appropriate for level highway driving may have to be reduced on very steep grades or for low traction situations (for example, on slippery boat ramps).

Temperature conditions can also affect towing. For example, towing a heavy trailer in high outside temperatures on graded roads can affect engine performance and cause overheating. The transmission high fluid temperature protection mode, which helps reduce the chance of transmission damage, could activate and automatically decrease engine power. Vehicle speed may decrease under high load. Plan your trip carefully to account for trailer and vehicle load, weather and road conditions.

WARNING

Overheating can result in reduced engine power and vehicle speed. The reduced speed may be lower than other traffic, which could increase the chance of a collision. Be especially careful when driving. If the vehicle cannot maintain a safe driving speed, pull to the side of the road in a safe area. Allow the engine to cool and return to normal operation. See "If your vehicle overheats" (P.6-11) of this manual.

CAUTION

Vehicle damage resulting from improper towing procedures are not covered by INFINITI warranties.

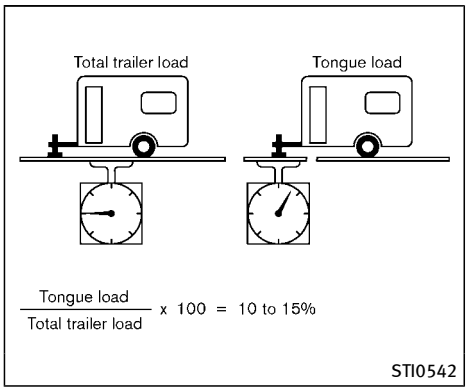

Tongue load

When using a weight carrying or a weight distributing hitch, keep the tongue load between 10 to 15% of the total trailer load within the maximum tongue load limits shown in the following “Towing Load/ Specification” chart. If the tongue load becomes excessive, rearrange cargo to allow for proper tongue load.

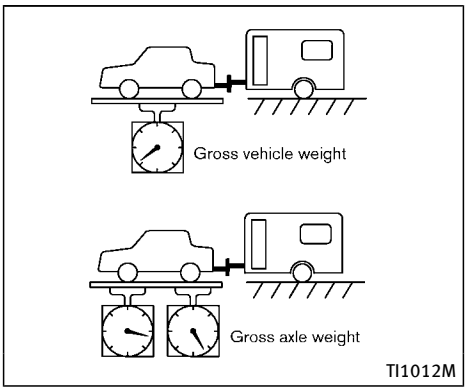

MAXIMUM GROSS VEHICLE WEIGHT (GVW)/MAXIMUM GROSS AXLE WEIGHT (GAW)

The GVW of the towing vehicle must not exceed the Gross Vehicle Weight Rating (GVWR) shown on the F.M.V.S.S./C.M.V.S.S. certification label. The GVW equals the combined weight of the unloaded vehicle, passengers, luggage, hitch, trailer tongue load and any other optional equipment. In addition, front or rear GAW must not exceed the Gross Axle Weight Rating (GAWR) shown on the F.M.V.S.S./C.M.V.S. S. certification label.

Towing capacities are calculated assuming a base vehicle with driver and any options required to achieve the rating. Additional passengers, cargo and/or optional equipment, such as the trailer hitch, will add weight to the vehicle and reduce your vehicle’s maximum towing capacity and trailer tongue load.

The vehicle and trailer need to be weighed to confirm the vehicle is within the GVWR, Front GAWR, Rear GAWR, Gross Combined Weight Rating (GCWR) and Towing capacity.

All vehicle and trailer weights can be measured using platform type scales commonly found at truck stops, highway weigh stations, building supply centers or salvage yards.

To determine the available payload capacity for tongue load, use the following procedure.

1. Locate the GVWR on the F.M.V.S.S./C.M. V.S.S. certification label.
2. Weigh your vehicle on the scale with all of the passengers and cargo that are normally in the vehicle when towing a trailer.
3. Subtract the actual vehicle weight from the GVWR. The remaining amount is the

available maximum tongue load.

To determine the available towing capacity, use the following procedure.

1. Find the GCWR for your vehicle on the "Towing Load/Specification" chart found later in this section.
2. Subtract the actual vehicle weight from the GCWR. The remaining amount is the available maximum towing capacity.

To determine the Gross Trailer Weight, weigh your trailer on a scale with all equipment and cargo, that are normally in the trailer when it is towed. Make sure the Gross trailer weight is not more than the Gross Trailer Weight Rating shown on the trailer and is not more than the calculated available maximum towing capacity.

Also weigh the front and rear axles on the scale to make sure the Front Gross Axle Weight and Rear Gross Axle Weight are not more than Front Gross Axle Weight and Rear Gross Axle Weight on the F.M.V.S.S./C.M.V.S.S. certification label. The cargo in the trailer and vehicle may need to be moved or removed to meet the specified ratings.

Example:

- Gross Vehicle Weight (GVW) as weighed on a scale - including passengers, cargo and hitch - 5,073 lb. (2,301 kg).
- Gross Vehicle Weight Rating (GVWR) from F.M.V.S.S./C.M.V.S.S. certification label - 5,301 lb. (2,404 kg).
- Gross Combined Weight Rating (GCWR) from "Towing Load/Specification" chart - 7,355 lb. (3,336 kg).
- Maximum Trailer towing capacity from "Towing Load/Specification" chart - 2,000 lb. (907 kg).

5,301 lb. (2,404 kg)	GVWR
– 5,073 lb. (2,301 kg)	GVW
= 228 lb. (103 kg)	Available for tongue weight
7,355 lb. (3,336 kg)	GCWR
– 5,073 lb. (2,301 kg)	GVW
= 2,282 lb. (1,035 kg)	Capacity available for towing
228 lb. (103 kg) /	Available tongue weight
2,282 lb. (1,035 kg)	Available capacity
	= 10 % tongue weight

The available towing capacity may be less than the maximum towing capacity due to the passenger and cargo load in the vehicle.

Remember to keep trailer tongue weight between 10 to 15% of the trailer weight. If the tongue load becomes excessive, re-arrange the cargo to obtain the proper tongue load. Do not exceed the 10 to 15% tongue weight specification even if the calculated available tongue weight is greater than 15%. If the calculated tongue weight is less than 10%, reduce the total trailer weight to match the available tongue weight.

Always verify that available capacities are within the required ratings.

TOWING LOAD/SPECIFICATION

TOWING LOAD/SPECIFICATION CHART Unit: lb (kg)		
	Two-Wheel Drive (2WD) model	All-Wheel Drive (AWD) model
MAXIMUM TRAILER WEIGHT*1	–	2,000 (907)*3 3,500 (1,588)*4
MAXIMUM TONGUE LOAD	–	200 (91)*3 350 (159)*4
GROSS COMBINED WEIGHT RATING	–	7,355 (3,336)*3 8,825 (4,003)*4
RECOMMENDED EQUIPMENT*2	Sway Control Device (SCD)	

1: All towing above 1,000 lb (454 kg) requires the use of trailer brakes. INFINITI recommends the use of a tandem axle trailer whenever towing above 3,000 lb (1,361 kg).

2: A sway control device is recommended for all towing above 2,000 lb (907 kg). Sway control devices are not offered by INFINITI. See a professional trailer/hitch outlet for a properly designed sway control device for your trailer.

3: For USA

4: For Canada

TOWING SAFETY

Trailer hitch

Choose a proper hitch for your vehicle and trailer. A genuine INFINITI trailer hitch is available from an INFINITI retailer. Make sure the trailer hitch is securely attached to the vehicle to help avoid personal injury or property damage due to sway caused by crosswinds, rough road surfaces or passing trucks.

WARNING

Trailer hitch components have specific weight ratings. Your vehicle may be capable of towing a trailer heavier than the weight rating of the hitch components. Never exceed the weight rating of the hitch components. Doing so can cause serious personal injury or property damage.

Hitch ball

Choose a hitch ball of the proper size and weight rating for your trailer:

- The required hitch ball size is stamped on most trailer couplers. Most hitch balls also have the size printed on top

of the ball.

- Choose the proper class hitch ball based on the trailer weight.
- The diameter of the threaded shank of the hitch ball must be matched to the ball mount hole diameter. The hitch ball shank should be no more than 1/16◊ smaller than the hole in the ball mount.
- The threaded shank of the hitch ball must be long enough to be properly secured to the ball mount. There should be at least 2 threads showing beyond the lock washer and nut.

Sway control device

Sudden maneuvers, wind gusts and buffeting caused by other vehicles can affect trailer handling. Sway control devices may be used to help control these affects. If you choose to use one, contact a reputable trailer hitch supplier to make sure the sway control device will work with the vehicle, hitch, trailer and the trailer's brake system. Follow the instructions provided by the manufacturer for installing and using the sway control device.

Class I hitch

Class I trailer hitch equipment (receiver, ball mount and hitch ball) can be used to tow trailers of a maximum weight of 2,000 lb (907 kg).

Class II hitch

Class II trailer hitch equipment (receiver, ball mount and hitch ball) can be used to tow trailers of a maximum weight of 3,500 lb (1,588 kg).

CAUTION

- **Special hitches which include frame reinforcements are required for towing above 2,000 lb (907 kg). Suitable genuine INFINITI hitches for pickup trucks and sport utility vehicles are available at an INFINITI retailer.**
- **The hitch should not be attached to or affect the operation of the impact-absorbing bumper.**
- **Do not use axle-mounted hitches.**
- **Do not modify the vehicle exhaust system, brake system, etc. to install a trailer hitch.**
- **To reduce the possibility of additional damage if your vehicle is struck from the rear, where practical, remove the hitch and/or receiver when not in use. After the hitch is removed, seal the bolt holes to prevent exhaust fumes, water or dust from entering the passenger compartment.**
- **Regularly check that all trailer hitch mounting bolts are securely mounted.**

Tire pressures

- When towing a trailer, inflate the vehicle tires to the recommended cold tire pressure indicated on the Tire and Loading Information label.
- Trailer tire condition, size, load rating and proper inflation pressure should be in accordance with the trailer and tire manufacturers' specifications.

Safety chains

Always use a suitable chain between your vehicle and the trailer. The safety chains should be crossed and should be attached

to the hitch, not to the vehicle bumper or axle. The safety chains can be attached to the bumper if the hitch ball is mounted to the bumper. Be sure to leave enough slack in the chains to permit turning corners.

Trailer lights

CAUTION

When splicing into the vehicle electrical system, a commercially available power-type module/converter must be used to provide power for all trailer lighting. This unit uses the vehicle battery as a direct power source for all trailer lights while using the vehicle tail light, stoplight and turn signal circuits as a signal source. The module/converter must draw no more than 15 milliamps from the stop and tail lamp circuits. Using a module/converter that exceeds these power requirements may damage the vehicle's electrical system. See a reputable trailer retailer to obtain the proper equipment and to have it installed.

Trailer lights should comply with federal and/or local regulations. For assistance in hooking up trailer lights, contact an INFINITI retailer or reputable trailer retailer.

Trailer brakes

If your trailer is equipped with a braking system, make sure it conforms to federal and/or local regulations and that it is properly installed.

WARNING

Never connect a trailer brake system directly to the vehicle brake system.

Pre-towing tips

- Be certain your vehicle maintains a level position when a loaded or unloaded trailer is hitched. Do not drive the vehicle if it has an abnormal nose-up or nose-down condition; check for improper tongue load, overload, worn suspension or other possible causes of either condition.
- Always secure items in the trailer to prevent load shift while driving.
- Keep the cargo load as low as possible in the trailer to keep the trailer center of gravity low.
- Load the trailer so approximately 60% of the trailer load is in the front half and 40% is in the back half. Also make sure the load is balanced side to side.
- Check your hitch, trailer tire pressure, vehicle tire pressure, trailer light operation, and trailer wheel lug nuts every time you attach a trailer to the vehicle.
- Be certain your rearview mirrors conform to all federal, state or local regulations. If not, install any mirrors required for towing before driving the vehicle.
- Determine the overall height of the vehicle and trailer so the required clearance is known.

Trailer towing tips

In order to gain skill and an understanding of the vehicle's behavior, you should practice turning, stopping and backing up in an area which is free from traffic. Steering stability, and braking performance will be somewhat different than under normal driving conditions.

- Always secure items in the trailer to prevent load shift while driving.
- Lock the trailer hitch coupler with a pin or lock to prevent the coupler from

inadvertently becoming unlatched.

- Avoid abrupt starts, acceleration or stops.
- Avoid sharp turns or lane changes.
- Always drive your vehicle at a moderate speed. Some states or provinces have specific speed limits for vehicles that are towing trailers. Obey the local speed limits.
- When backing up, hold the bottom of the steering wheel with one hand. Move your hand in the direction in which you want the trailer to go. Make small corrections and back up slowly. If possible, have someone guide you when you are backing up.

Always block the wheels on both vehicle and trailer when parking. Parking on a slope is not recommended; however, if you must do so:

CAUTION

If you move the shift lever to the P (Park) position before blocking the wheels and applying the parking brake, transmission damage could occur.

1. Apply and hold the brake pedal.
2. Have someone place blocks on the downhill side of the vehicle and trailer wheels.
3. After the wheel blocks are in place, slowly release the brake pedal until the blocks absorb the vehicle load.
4. Apply the parking brake.
5. Shift the transmission into P (Park).
6. Turn off the engine.

To drive away:

1. Apply and hold the brake pedal.
2. Start the engine.
3. Shift the transmission into gear.
4. Release the parking brake.
5. Drive slowly until the vehicle and trailer are clear from the blocks.
6. Apply and hold the brake pedal.
7. Have someone retrieve and store the blocks.

- When going down a hill, shift into a lower gear and use the engine braking effect. When going up a long grade, downshift the transmission to a lower gear and reduce speed to reduce chances of engine overloading and/or overheating.
- If the engine coolant rises to an extremely high temperature when the air conditioning system is on, turn off the air conditioner. Coolant heat can be additionally vented by opening the windows, switching the fan control to high and setting the temperature control to the HOT position.
- Trailer towing requires more fuel than normal circumstances.
- Avoid towing a trailer for the first 500 miles (800 km).
- Have your vehicle serviced more often than at intervals specified in the recommended maintenance schedule in the INFINITI Service and Maintenance Guide.
- When making a turn, your trailer wheels will be closer to the inside of the turn than your vehicle wheels. To compensate for this, make a larger than normal turning radius during the turn.
- Crosswinds and rough roads will adversely affect vehicle/trailer handling, possibly causing vehicle sway. When being passed by larger vehicles, be prepared for possible changes in crosswinds that could affect vehicle hand-

ling. If swaying does occur, firmly grip the steering wheel, steer straight ahead, and immediately (but gradually) reduce vehicle speed. This combination will help stabilize the vehicle. Never increase speed.

Do the following if the trailer begins to sway:

1. Take your foot off the accelerator pedal to allow the vehicle to coast and steer as straight ahead as the road conditions allow. This combination will help stabilize the vehicle.
   - Do not correct trailer sway by steering or applying the brakes.
2. When the trailer sway stops, gently apply the brakes and pull to the side of the road in a safe area.
3. Try to rearrange the trailer load so it is balanced as described earlier in this section.

- Be careful when passing other vehicles. Passing while towing a trailer requires considerably more distance than normal passing. Remember the length of the trailer must also pass the other vehicle before you can safely change lanes.
- Down shift the transmission to a lower gear for engine braking when driving down steep or long hills. This will help slow the vehicle without applying the brakes.
- Avoid holding the brake pedal down too long or too frequently. This could cause the brakes to overheat, resulting in reduced braking efficiency.
- Increase your following distance to allow for greater stopping distances while towing a trailer. Anticipate stops and brake gradually.
- Do not use cruise control while towing a trailer.
- Some states or provinces have specific regulations and speed limits for vehicles that are towing trailers. Obey the local speed limits.
- Check your hitch, trailer wiring harness connections, and trailer wheel lug nuts after 50 miles (80 km) of travel and at every break.
- When stopped in traffic for long periods of time in hot weather, put the vehicle in the P (Park) position.
- When launching a boat, don't allow the water level to go over the exhaust tail pipe or rear bumper.
- Make sure you disconnect the trailer lights before backing the trailer into the water or the trailer lights may burn out.

When towing a trailer, the transmission fluid should be changed more frequently. For additional information, see the "8. Maintenance and do-it-yourself" section earlier in this manual.

FLAT TOWING

Towing your vehicle with all four wheels on the ground is sometimes called flat towing. This method is sometimes used when towing a vehicle behind a recreational vehicle, such as a motor home.

CAUTION

- **Failure to follow these guidelines can result in severe transmission damage.**
- **Whenever flat towing your vehicle, always tow forward, never backward.**
- **DO NOT tow any automatic transmission vehicle with all four wheels on the ground (flat towing). Doing so WILL DAMAGE internal transmission parts due to lack of transmission lubrication.**

- **DO NOT tow an All-Wheel Drive (AWD) vehicle with any of the wheels on the ground. Doing so may cause serious and expensive damage to the powertrain.**
- **For emergency towing procedures refer to "Towing recommended by INFINITI" (P.6-13) of this manual.**

Automatic transmission

All-Wheel Drive (AWD) models:

Do not tow an AWD vehicle with any of the wheels on the ground.

Two-Wheel Drive (2WD) models:

To tow a vehicle equipped with an automatic transmission, an appropriate vehicle dolly **MUST** be placed under the towed vehicle's drive wheels. **Always** follow the dolly manufacturer's recommendations when using their product.

UNIFORM TIRE QUALITY GRADING

DOT (Department Of Transportation) Quality Grades: All passenger car tires must conform to federal safety requirements in addition to these grades.

Quality grades can be found where applicable on the tire sidewall between tread shoulder and maximum section width. For example:

Treadwear 200 Traction AA Temperature A

TREADWEAR

The treadwear grade is a comparative rating based on the wear rate of the tire when tested under controlled conditions on a specified government test course. For example, a tire graded 150 would wear one and one-half (1 1/2) times as well on the government course as a tire graded 100. The relative performance of tires depends upon actual conditions of their use, however, and may depart significantly from the norm due to variations in driving habits, service practices and differences in road characteristics and climate.

TRACTION AA, A, B AND C

The traction grades, from highest to lowest, are AA, A, B and C. Those grades represent the tire's ability to stop on wet pavement as measured under controlled conditions on specified government test surfaces of asphalt and concrete. A tire marked C may have poor traction performance.

WARNING

The traction grade assigned to this tire is based on straight-ahead braking traction tests, and does not include acceleration, cornering, hydroplaning, or peak traction characteristics.

TEMPERATURE A, B AND C

The temperature grades A (the highest), B, and C, representing the tire's resistance to the generation of heat and its ability to dissipate heat when tested under controlled conditions on a specified indoor laboratory test wheel. Sustained high temperature can cause the material of the tire to degenerate and reduce tire life, and excessive temperature can lead to sudden

tire failure. The grade C corresponds to a level of performance which all passenger car tires must meet under the Federal Motor Vehicle Safety Standard No. 109. Grades B and A represent higher levels of performance on the laboratory test wheel than the minimum required by law.

WARNING

The temperature grade for this tire is established for a tire that is properly inflated and not overloaded. Excessive speed, under-inflation, or excessive loading, either separately or in combination, can cause heat build-up and possible tire failure.

EMISSION CONTROL SYSTEM WARRANTY

Your INFINITI is covered by the following emission warranties.

For USA:

- Emission Defects Warranty
- Emissions Performance Warranty

Details of these warranties may be found with other vehicle warranties in your Warranty Information Booklet that comes with your INFINITI. If you did not receive a Warranty Information Booklet, or it has become lost, you may obtain a replacement by writing to:

- INFINITI Division
  Nissan North America, Inc.
  Consumer Affairs Department
  P.O. Box 685003
  Franklin, TN 37068-5003

For Canada:

Emission Control System Warranty

Details of these warranties may be found with other vehicle warranties in your Warranty and Roadside Assistance Information that comes with your INFINITI. If you did not receive a Warranty and Roadside Assistance Information, or it has become lost, you may obtain a replacement by writing to:

- Nissan Canada Inc.
  5290 Orbitor Drive
  Mississauga, Ontario,
  L4W 4Z5

For USA

If you believe that your vehicle has a defect which could cause a crash or could cause injury or death, you should immediately inform the National Highway Traffic Safety Administration (NHTSA) in addition to notifying INFINITI.

If NHTSA receives similar complaints, it may open an investigation, and if it finds that a safety defect exists in a group of vehicles, it may order a recall and remedy campaign. However, NHTSA cannot become involved in individual problems between you, your retailer, or INFINITI.

To contact NHTSA, you may call the Vehicle Safety Hotline toll-free at 1-888- 327-4236 (TTY: 1-800-424-9153); go to http://www.safercar.gov; or write to: Administrator, NHTSA, 400 Seventh Street, SW., Washington, D.C. 20590. You can also obtain other information about motor vehicle safety from http://www.safercar.gov.

You may notify INFINITI by contacting our Consumer Affairs Department, toll-free, at 1-800-662-6200.

For Canada

If you believe that your vehicle has a defect which could cause a crash or could cause injury or death, you should immediately inform Transport Canada in addition to notifying INFINITI.

If Transport Canada receives complaints, it may open an investigation, and if it finds that a safety defect exists in a group of vehicles, it may request that INFINITI conduct a recall campaign. However, Transport Canada cannot become involved in individual problems between you, your retailer, or INFINITI.

You may contact Transport Canada's Defect Investigations and Recalls Division toll free at 1-800-333-0510. You may also report safety defects online at:

https://wwwapps.tc.gc.ca/Saf-Sec-Sur/7/ PCDB-BDPP/Index.aspx.

Additional information concerning motor vehicle safety may be obtained from Transport Canada's Road Safety Information Centre at 1-800-333-0371 or online at www.tc.gc.ca/roadsafety (English speakers) or www.tc.gc.ca/securiteroutiere (French speakers).

To notify INFINITI of any safety concerns please contact our Consumer Information Centre toll free at 1-800-361-4792.

READINESS FOR INSPECTION/ MAINTENANCE (I/M) TEST

WARNING

A vehicle equipped with All-Wheel Drive (AWD) should never be tested using a two wheel dynamometer (such as the dynamometers used by some states for emissions testing), or similar equipment. Make sure you inform test facility personnel that your vehicle is equipped with AWD before it is placed on a dynamometer. Using the wrong test equipment may result in transmission damage or unexpected vehicle movement which could result in serious vehicle damage or personal injury.

Due to legal requirements in some states/ areas or provinces, your vehicle may be required to be in what is called the "ready condition" for an Inspection/Maintenance (I/M) test of the emission control system.

The vehicle is set to the "ready condition" when it is driven through certain driving patterns. Usually, the "ready condition" can be obtained by ordinary usage of the vehicle.

If a powertrain system component is repaired or the battery is disconnected, the vehicle may be reset to a "not ready condition". Before taking the I/M test, check the vehicle's inspection/maintenance test readiness condition. Place the ignition switch in the ON position without starting the engine. If the Malfunction Indicator Light (MIL) comes on steady for 20 seconds and then blinks for 10 seconds, the I/M test condition is "not ready". If the MIL does not blink after 20 seconds, the I/M test condition is "ready".

Contact an INFINITI retailer to set the "ready condition" or to prepare the vehicle for testing.

EVENT DATA RECORDERS (EDR)

This vehicle is equipped with an Event Data Recorder (EDR). The main purpose of an EDR is to record, in certain crash or near crash-like situations, such as an air bag deployment or hitting a road obstacle, data that will assist in understanding how a vehicle's systems performed. The EDR is designed to record data related to vehicle dynamics and safety systems for a short period of time, typically 30 seconds or less. The EDR in this vehicle is designed to record such data as:

- How various systems in your vehicle were operating;
- Whether or not the driver and passenger safety belts were buckled/fastened;
- How far (if at all) the driver was depressing the accelerator and/or brake pedal; and,
- How fast the vehicle was traveling.
- Sounds are not recorded.

These data can help provide a better understanding of the circumstances in which crashes and injuries occur.

NOTE: EDR data are recorded by your vehicle only if a nontrivial crash situation occurs; no data are recorded by the EDR under normal driving conditions and no personal data (e.g. name, gender, age and

crash location) are recorded. However, other parties, such as law enforcement, could combine the EDR data with the type of personally identifying data routinely acquired during a crash investigation.

To read data recorded by an EDR, special equipment is required and access to the vehicle or the EDR is needed. In addition to the vehicle manufacturer and INFINITI retailer, other parties, such as law enforcement, that have the special equipment, can read the information if they have access to the vehicle or the EDR. EDR data will only be accessed with the consent of the vehicle owner or lessee or as otherwise required or permitted by law.

OWNER'S MANUAL/SERVICE MANUAL ORDER INFORMATION

Genuine INFINITI Service Manual for this model year and prior can be purchased. A genuine INFINITI Service Manual is the best source of service and repair information for your vehicle. This manual is the same one used by the factory-trained technicians working at INFINITI retailerships. Genuine INFINITI Owner's Manual can also be purchased.

For USA:

For current pricing and availability of genuine **INFINITI Service Manuals**, contact:

1-800-450-9491
www.infiniti-techinfo.com

For current pricing and availability of genuine **INFINITI Owner's Manuals**, contact:

1-800-247-5321

For Canada:

To purchase a copy of a genuine INFINITI Service Manual or Owner's Manual for this model year and prior, contact an INFINITI retailer. For the phone number and location of an INFINITI retailer in your area call the INFINITI Satisfaction Center at 1-800-361-4792 and a bilingual INFINITI representative will assist you.

MEMO

MEMO

10 Index

A

ABS (Anti-lock Braking System) 5-82
Adaptive front lighting system (AFS) 2-42
Adaptive shift control (ASC) 5-19
Advanced air bag system 1-47
Aiming control, Adaptive front lighting system (AFS) 2-42
Air bag system
  Advanced air bag system 1-47
  Front passenger air bag and status light 1-49
  Front-seat mounted side-impact supplemental air bag system 1-52
  Roof-mounted curtain side-impact and rollover supplemental air bag system 1-52
Air bag warning labels 1-55
Air bag warning light 1-55, 2-18
Air cleaner housing filter 8-18
Air conditioner
  Air conditioner service 4-51
  Air conditioner specification label 9-13
  Air conditioning system refrigerant and lubricant recommendations 4-51, 9-7
  Automatic climate control 4-48, 4-49
  In-cabin microfilter 4-51
Alarm, How to stop alarm (see vehicle security system) 2-33
Alcohol, drugs and driving 5-8
All-wheel drive (AWD) 5-76
All-wheel drive (AWD) warning light 2-13
Antenna 4-88
Anti-lock Braking System (ABS) 5-82
Anti-lock braking system (ABS) warning light 2-14
Appearance care
  Exterior appearance care 7-2
  Interior appearance care 7-4
Armrest 1-7
Around View Monitor (AVM) 4-31
Audible reminders 2-21
Audio operation precautions 4-52
Audio system 4-52
  Steering wheel audio controls 4-87
Auto closure 3-23
Autolight system 2-39
Automatic
  Automatic transmission fluid (ATF) 8-12
  Climate control 4-48, 4-49
  Door locks 3-5
  Drive positioner 3-32
  Driving with automatic transmission 5-15
  Moonroof 2-62
  Seat positioner 3-32
Average fuel consumption and speed 2-29
Avoiding collision and rollover 5-6

B

Back door (See lift gate) 3-18
Battery 8-15
  Battery saver system 2-41
  Intelligent Key 8-24
  Variable voltage control system 8-16
Before starting the engine 5-14
Belts (See drive belts) 8-17
Bluetooth® hands-free phone system (models with navigation system) 4-90
Bluetooth® hands-free phone system (models without navigation system) 4-100
Bluetooth streaming audio 4-64, 4-79, 4-88
Booster seats 1-39
Brake
  Anti-lock Braking System (ABS) 5-82
  Brake fluid 8-13
  Brake system 5-79
  Parking brake operation 5-20
  Warning light 2-14
Break-in schedule 5-74
Brightness control
  Display ON/OFF button 4-9
  Instrument panel 2-43
Bulb check/instrument panel 2-13
Bulb replacement 8-26

C

Cabin air filter 4-51
Capacities and recommended fluids/lubricants 9-2
Car phone or CB radio 4-89
Cargo (See vehicle loading information) 2-55
Cargo cover 2-56
Cargo light 2-66

Cargo net 2-55
Catalytic converter, Three way catalyst 5-3
CD/CF/USB memory care and cleaning 4-86
Center multi-function control panel 4-3
Child restraints 1-22
Booster seats 1-39
LATCH system 1-24
Precautions on child restraints 1-22
Child safety 1-20
Child safety rear door lock 3-6
Chimes
Audible reminders 2-21
Seat belt warning light and chime 2-18
Circuit breaker, Fusible link 8-22
Cleaning exterior and interior 7-2, 7-4
Climate control
Automatic climate control 4-48, 4-49
Clock 2-49
Coat hooks 2-54
Cockpit 2-3
Cold weather driving 5-85
Compact Disc (CD) player (See audio system) 4-69
Compact spare tire 8-39
Compass 2-10
Console box 2-53
Controller, Center multi-function control panel 4-5
Controls
Control panel button 4-3
INFINITI Controller 4-5
Coolant
Capacities and
recommended fluids/lubricants 9-2
Changing engine coolant 8-9
Checking engine coolant level 8-8
Corrosion protection 7-7
Cover, Cargo cover 2-56
Cruise control 5-30
Fixed speed cruise control (on ICC system) ... 5-51
Cup holders 2-51
Current fuel consumption 2-29

D

Daytime running light system 2-42
Defroster switch, Rear window and outside
mirror defroster switch 2-38
Dimensions 9-10
Distance Control Assist (DCA) system 5-55
Distance Control Assist (DCA) system
warning light 2-15
Distance to empty 2-29
Door/lift gate open warning 2-26
Drive belts 8-17
Drive positioner 3-32
Driving
All-wheel drive (AWD) 5-76
Cold weather driving 5-85
Driving with automatic transmission 5-15
On-pavement and off-road driving 5-7
Precautions when starting and driving 5-3
Safety precautions 5-9
DS (Drive Sport) mode 5-17
DVD player operation 4-70

E

Economy, Fuel 5-76
Elapsed time 2-29
Elapsed time and trip odometer 2-29
Emission control information label 9-12
Emission control system warranty 9-29
Engine
Before starting the engine 5-14
Break-in schedule 5-74
Capacities and
recommended fluids/lubricants 9-2
Changing engine coolant 8-9
Changing engine oil and filter 8-10
Checking engine coolant level 8-8
Checking engine oil level 8-9
Coolant temperature gauge 2-8
Emergency engine shut off 5-13
Engine block heater 5-86
Engine compartment check locations 8-7
Engine cooling system 8-7
Engine oil 8-9
Engine oil and oil filter recommendation 9-6
Engine oil replacement indicator 2-27
Engine oil viscosity 9-7
Engine serial number 9-12
Engine specifications 9-8
Engine start operation indicator 2-25
If your vehicle overheats 6-11

Starting the engine 5-14
Entry/exit function, Automatic
drive positioner 3-32
Event Data Recorders (EDR) 9-31
Exhaust gas (carbon monoxide) 5-3

F

F.M.V.S.S./C.M.V.S.S. certification label 9-12
Filter
Air cleaner housing filter 8-18
Changing engine oil and filter 8-10
Flashers (See hazard warning flasher switch) 6-2
Flat tire 6-3
Flat towing 9-27
Floor mat cleaning 7-5
Fluid
Automatic transmission fluid (ATF) 8-12
Brake fluid 8-13
Capacities and
recommended fluids/lubricants 9-2
Engine coolant 8-7
Engine oil 8-9
Power steering fluid 8-12
Window washer fluid 8-14
FM-AM-SAT radio with Compact Disc
(CD) player 4-66
Fog light switch 2-44
Forward Collision Warning (FCW) system 5-67
Front passenger air bag and status light 1-49
Front power seat adjustment 1-4
Front seat, Front seat adjustment 1-4
Front-seat active head restraint 1-11
Fuel
Capacities and
recommended fluids/lubricants 9-2
Fuel economy 5-76
Fuel economy information (display) 4-11
Fuel information 9-4
Fuel octane rating 9-4
Fuel-filler cap 3-24
Fuel-filler door 3-24
Gauge 2-9
LOOSE FUEL CAP warning 3-26
Fuel Efficient Driving Tips 5-74
Fuses 8-22
Fusible links 8-22

G

Garage door opener, HomeLink®
Universal Transceiver 2-66
Gas cap 3-24
Gauge
Engine coolant temperature gauge 2-8
Fuel gauge 2-9
Odometer 2-7
Speedometer 2-7
Tachometer 2-8
Trip computer 2-29
General maintenance 8-2
Glove box 2-53

H

Hands-free phone system, Bluetooth®
(models with navigation system) 4-90
Hands-free phone system, Bluetooth®
(models without navigation system) 4-100
Hazard warning flasher switch 6-2
Head restraints/headrests 1-8
Headlight aiming control 2-41
Headlights
Aiming control (See adaptive front lighting
system (AFS)) 2-42
Bulb replacement 8-27
Headlight switch 2-39
Xenon headlights 2-38
Heater
Automatic climate control 4-48, 4-49
Engine block heater 5-86
HomeLink® Universal Transceiver 2-66
Hood release 3-18
Hook
Coat hooks 2-54
Luggage hook 2-55
Horn 2-44

I

Ignition switch (Push-button) 5-11
Immobilizer system 2-33
In-cabin microfilter 4-51
Indicator
Lights 2-19

Vehicle information display 2-22
INFINITI Vehicle Immobilizer System 2-33
INFINITI voice recognition system 4-115
INFO button 4-9
Inside mirror 3-29
Inspection/maintenance (I/M) test 9-31
Instrument brightness control 2-43
Instrument panel 2-5
Intelligent Brake Assist (IBA) off indicator light ... 2-20
Intelligent Brake Assist (IBA) system 5-70
Intelligent Cruise Control (ICC) system (Full Speed Range) 5-32
Intelligent Cruise Control (ICC) system warning light 2-16
Intelligent cruise control (ICC) system, Preview function 5-54
Intelligent Key 3-2
Intelligent Key battery discharge indicator 2-25
Intelligent Key insertion indicator 2-25
Intelligent Key removal indicator 2-25
Intelligent Key system 3-6
Battery replacement 8-24
Intelligent Key warning light 2-16
Key operating range 3-8
Key operation 3-9
Warning signals 3-12
Interior light control switch 2-64
Interior light replacement 8-27
Interior lights 2-64
iPod® player operation 4-83
ISOFIX child restraint 1-24

J

Jump starting 6-9

K

Keyless entry (See remote keyless entry system) 3-14
Keys 3-2
For Intelligent Key system 3-6

L

Labels
Air bag warning labels 1-55
Air conditioner specification label 9-13
Emission control information label 9-12
Engine serial number 9-12
F.M.V.S.S./C.M.V.S.S. certification label 9-12
Tire and Loading information label 8-31, 9-13
Vehicle identification number (VIN) 9-11
Lane Departure Prevention (LDP) system 5-25
Lane Departure Warning (LDW) indicator (green) light 2-20
Lane Departure Warning (LDW) indicator (orange) light 2-16
Lane departure warning (LDW) system 5-22
Lane Departure Warning (LDW) system/Lane Departure Prevention (LDP) system 5-21
Lane departure warning chime 2-22
LATCH system 1-24
License plate, Installing front license plate 9-14
Lift gate 3-18
Light
Air bag warning light 1-55
Bulb replacement 8-26
Cargo light 2-66
Fog light switch 2-44
Headlight switch 2-39
Headlights bulb replacement 8-27
Indicator lights 2-19
Interior light control switch 2-64
Interior lights 2-64
Map lights 2-64
Personal lights 2-64
Replacement 8-26
Vanity mirror lights 2-65
Warning/indicator lights and audible reminders 2-13
Xenon headlights 2-38
Lights, Exterior and interior light replacement ... 8-27
Loading information (See vehicle loading information) 9-15
Lock
Automatic door locks 3-5
Door locks 3-4
Lift gate lock 3-18
Power door lock 3-4
Locking with mechanical key 3-4
Low fuel warning 2-26
Low tire pressure warning light 2-16

Low tire pressure warning system
(See tire pressure monitoring system (TPMS)) 5-4
Low washer fluid warning 2-26
Luggage hooks 2-55

M

Maintenance
Battery..... 8-15
General maintenance 8-2
Indicators for maintenance 2-27
Inside the vehicle 8-3
Maintenance precautions 8-5
Maintenance requirements..... 8-2
Outside the vehicle..... 8-2
Seat belt maintenance 1-19
Malfunction indicator light (MIL) 2-20
Map lights 2-64
Master warning light..... 2-18
Mechanical key (Intelligent Key system) 3-3
Memory storage, Automatic drive positioner 3-34
Meter, Trip computer..... 2-29
Meters and gauges 2-6
Instrument brightness control 2-43
Mirror
Inside mirror..... 3-29
Outside mirrors..... 3-30
Vanity mirror..... 3-32
Monitor, RearView Monitor..... 4-24
Moonroof..... 2-61

N

Net, Cargo net 2-55
New vehicle break-in..... 5-74
No key warning..... 2-25

O

Odometer 2-7
Off-road recovery 5-7
Oil
Capacities and
recommended fluids/lubricants..... 9-2
Changing engine oil and filter 8-10
Checking engine oil level 8-9
Engine oil 8-9
Engine oil viscosity 9-7
Oil filter replacement indicator..... 2-27
Operation, Indicators for operation 2-25
Outside air temperature 2-30
Outside mirrors..... 3-30
Overheat, If your vehicle overheats 6-11
Owner's Manual/Service Manual
order information..... 9-32

P

Panic alarm 3-16
Parking
Brake break-in 5-79
Parking brake operation..... 5-20
Parking brake release warning 2-25
Parking on hills 5-78
Personal lights..... 2-64
Phone
Bluetooth® hands-free phone system
(models with navigation system)..... 4-90
Bluetooth® hands-free phone system
(models without navigation system)..... 4-100
Car phone or CB radio 4-89
Power
Front seat adjustment 1-4
Power door lock..... 3-4
Power outlet 2-50
Power steering fluid..... 8-12
Power steering system 5-79
Power windows..... 2-59
Precautions
Audio operation 4-52
Braking precautions..... 5-79
Child restraints 1-22
Cruise control 5-30
Driving safety..... 5-9
Lane departure warning (LDW) system 5-22
Maintenance..... 8-5
On-pavement and off-road driving..... 5-7
Seat belt usage 1-12
Supplemental restraint system..... 1-42
When starting and driving..... 5-3
Pre-crash seat belts with comfort function 1-15
Preview function 5-80
Preview function (for Intelligent cruise
control system)..... 5-54

Preview Function warning light 2-18
Push starting 6-11
“PUSH” warning 2-25
Push-button ignition switch 5-11, 5-12

R

Radio 4-52
Car phone or CB radio 4-89
FM-AM-SAT radio with Compact Disc (CD) player 4-66
Rain-sensing auto wiper system 2-36
Rapid air pressure loss 5-8
Readiness for inspection/maintenance (I/M) test 9-31
Rear center seat belt 1-19
Rear door lock, Child safety rear door lock 3-6
Rear seats 1-6
Rear window and outside mirror defroster switch 2-38
Rear window wiper blades 8-21
RearView Monitor 4-24
Recorders, Event data 9-31
Registering your vehicle in another country 9-11
Remote keyless entry system 3-14
Reporting safety defects 9-30
Roadside assistance program 6-2
Rollover 5-6
Roof
Moonroof 2-62
Roof rack 2-58

S

Safety
Child seat belts 1-20
Towing safety 9-23
Satellite radio operation 4-67
Seat adjustment
Front power seat adjustment 1-4
Front seats 1-4
Seat belt(s)
Child safety 1-20
Infants 1-20
Injured persons 1-15
Larger children 1-21
Precautions on seat belt usage 1-12
Pre-crash seat belts with comfort function 1-15
Pregnant women 1-15
Rear center seat belt 1-19
Seat belt cleaning 7-6
Seat belt extenders 1-19
Seat belt maintenance 1-19
Seat belt warning light and chime 2-18
Seat belts 1-12
Seat belts with pretensioners 1-54
Shoulder belt height adjustment 1-18
Small children 1-21
Three-point type 1-15
Seat synchronization function 3-33
Seat(s)
Climate controlled seats 2-46
Driver-side memory 3-32
Heated seats 2-45
Seats 1-3
Security system (INFINITI Vehicle Immobilizer System), Engine start 2-33
Security system, Vehicle security system 2-32
Servicing climate control 4-51
SETTING button 4-15
Shift lever
Shift lock release 5-19
Shift lock release
Transmission 5-19
SHIFT “P” warning 2-25
Shifting, Automatic transmission 5-15
Shoulder belt height adjustment, For front seats 1-18
Snow mode switch 2-48
Spare tire 9-9
Spark plugs 8-17
Speedometer 2-7
Starting
Before starting the engine 5-14
Jump starting 6-9
Precautions when starting and driving 5-3
Push starting 6-11
Starting the engine 5-14
STATUS button 4-9
Status light, Front passenger air bag 1-49
Steering
Power steering fluid 8-12
Power steering system 5-79

Steering-wheel-mounted controls for audio 4-87
Tilt/telescopic steering 3-27
Storage 2-51
Sun visors 3-28
Sunglasses holder 2-52
Supplemental air bag warning labels 1-55
Supplemental air bag warning light 1-55, 2-18
Supplemental restraint system 1-42
Precautions on supplemental restraint system 1-42
Switch
Autolight switch 2-39
Fog light switch 2-44
Hazard warning flasher switch 6-2
Headlight switch 2-39
Ignition switch 5-15
Intelligent Brake Assist (IBA) OFF switch 2-48
Power door lock switch 3-5
Rear window and outside mirror defroster switch 2-38
Snow mode switch 2-48
Turn signal switch 2-44
Vehicle dynamic control (VDC) off switch 2-49
Warning systems switch 2-47

T

Tachometer 2-8
Temperature gauge, Engine coolant temperature gauge 2-8
Theft (INFINITI Vehicle Immobilizer System), Engine start 2-33
Thigh extension 1-6
Three-way catalyst 5-3
Tilt/telescopic steering 3-27
Tire
Pressure, Low tire pressure warning light ... 2-16
Tire replacement indicator 2-27
Tires
Flat tire 6-3
Low tire pressure warning system 5-4
Spare tire 8-39
Tire and Loading information label 8-31, 9-13
Tire chains 8-36
Tire dressing 7-4
Tire pressure 8-29
Tire pressure information (display) 4-11
Tire pressure monitoring system (TPMS) 5-4, 6-3
Tire rotation 8-36
Types of tires 8-35
Uniform tire quality grading 9-28
Wheel/tire size 9-9
Wheels and tires 8-29
Tonneau cover (see cargo cover) 2-56
Touch screen system 4-6
Towing
Flat towing 9-27
Tow truck towing 6-12
Towing a trailer 9-19
Towing safety 9-23
TPMS, Tire pressure monitoring system 5-4
TPMS, Tire pressure warning system 6-3
Trailer towing 9-19
Transceiver, HomeLink® Universal Transceiver ... 2-66
Transmission
Automatic transmission fluid (ATF) 8-12
Driving with automatic transmission 5-15
Transmission shift lever lock release 5-19
Transmitter (See remote keyless entry system) ... 3-14
Traveling or registering your vehicle in another country 9-11
Trip computer 2-29
Trip odometer 2-29
Turn signal switch 2-44

U

Underbody cleaning 7-3
Uniform tire quality grading 9-28
USB (Universal Serial Bus) Connection Port 4-74

V

Vanity mirror 3-32
Vanity mirror lights 2-65
Variable voltage control system 8-16
Vehicle
Dimensions 9-10
Identification number (VIN) 9-11
Loading information 9-15
Recovery (freeing a stuck vehicle) 6-15
Security system 2-32

Vehicle dynamic control (VDC) off switch 2-49
Vehicle dynamic control (VDC) system 5-84
Vehicle information and settings (display) 4-9
Vehicle Dynamic Control (VDC) warning light 2-19
Vehicle information display 2-22
Ventilators 4-47
Voice command (Bluetooth® Hands-Free Phone System) 4-106
Voice command (INFINITI voice recognition system) 4-121, 4-129
Voice recognition system 4-115
Voice recognition, Alternate command mode ... 4-127
Voice recognition, Standard mode 4-115

W

Warning
Hazard warning flasher switch 6-2
Lane departure warning (LDW) system 5-22
Lights 2-13
Tire pressure monitoring system (TPMS) 5-4, 6-3
Vehicle information display 2-22
Warning/indicator lights and audible reminders 2-13
Warning labels, Air bag warning labels 1-55
Warning light
Air bag warning light 1-55, 2-18
All-wheel drive (AWD) warning light 2-13
Anti-lock braking system (ABS) warning light 2-14
Brake warning light 2-14
Intelligent Key warning light 2-16
Lane Departure Warning (LDW) indicator light 2-16
Low tire pressure warning light 2-16
Seat belt warning light and chime 2-18
Warranty, Emission control system warranty 9-29
Washer switch, Windshield wiper and washer switch 2-34
Washing 7-2
Waxing 7-2
Welcome light 2-63
Wheel/tire size 9-9
Wheels and tires 8-29
Care of wheels 7-3
Cleaning aluminum alloy wheels 7-3
Window washer fluid 8-14
Window(s)
Cleaning 7-3
Power windows 2-59
Windshield wiper and washer switch 2-34
Wiper
Rain-sensing auto wiper system 2-36
Windshield wiper and washer switch 2-34
Wiper blades 8-19

X

Xenon headlights 2-38

MEMO

FUEL INFORMATION:

Use unleaded premium gasoline with an octane rating of at least 91 AKI (Anti-Knock Index) number (Research octane number 96).

If unleaded premium gasoline is not available, unleaded regular gasoline with an octane rating of at least 87 AKI number (Research octane number 91) may be temporarily used, but only under the following precautions:

- Have the fuel tank filled only partially with unleaded regular gasoline, and fill up with unleaded premium gasoline as soon as possible.
- Avoid full throttle driving and abrupt acceleration.

Use unleaded premium gasoline for maximum vehicle performance.

CAUTION

- **Using a fuel other than that specified could adversely affect the emission control system, and may also affect warranty coverage.**
- **Under no circumstances should a leaded gasoline be used, because this will damage the three-way catalyst.**
- **Do not use E-15 or E-85 fuel in your vehicle. Your vehicle is not designed to run on E-15 or E-85 fuel. Using E-15 or E-85 fuel in a vehicle not specifically designed for E-15 or E-85 fuel can adversely affect the emission control devices and systems of the vehicle. Damage caused by such fuel is not covered by the INFINITI new vehicle limited warranty.**
- **U.S. government regulations require ethanol dispensing pumps to be identified by a small, square, orange and black label with the common abbreviation or the appropriate percentage for that region.**

ENGINE OIL RECOMMENDATION:

Genuine NISSAN engine oil or equivalent.

- Engine oil with API Certification Mark
- Viscosity SAE 5W-30

See “Capacities and recommended fluids/lubricants” (P.9-2) for engine oil and oil filter recommendation.

COLD TIRE PRESSURES:

The label is typically located on the driver side center pillar or on the driver’s door. For additional information, see “Wheels and tires” (P.8-29).

NEW VEHICLE BREAK-IN PROCEDURES RECOMMENDATION:

During the first 1,200 miles (2,000 km) of vehicle use, follow the recommendations outlined in the “Break-in schedule” (P.5-74) of this Owner’s Manual. Follow these recommendations for the future reliability and economy of your new vehicle.

Printing: April 2014 / OM15E0 0S51U0 / Printed in U.S.A.

INFINITI®