Technical training.
Product information.

G30 Driver Assistance Systems

cardiagn.com

Edited for the U.S. market by:
BMW Group University
Technical Training
ST1604 11/1/2016

BMW Service

General information

Symbols used

The following symbol is used in this document to facilitate better comprehension or to draw attention to very important information:

⚠

Contains important safety information and information that needs to be observed strictly in order to guarantee the smooth operation of the system.

Information status and national-market versions

BMW Group vehicles meet the requirements of the highest safety and quality standards. Changes in requirements for environmental protection, customer benefits and design render necessary continuous development of systems and components. Consequently, there may be discrepancies between the contents of this document and the vehicles available in the training course.

This document basically relates to the European version of left hand drive vehicles. Some operating elements or components are arranged differently in right-hand drive vehicles than shown in the graphics in this document. Further differences may arise as the result of the equipment specification in specific markets or countries.

Additional sources of information

Further information on the individual topics can be found in the following:

- Owner's Handbook
- Integrated Service Technical Application.

Contact: conceptinfo@bmw.de

©2016 BMW AG, Munich

Reprints of this publication or its parts require the written approval of BMW AG, Munich.

The information contained in this document forms an integral part of the BMW Group Technical Qualification and is intended for the trainer and participants in the seminar. Refer to the latest relevant information systems of the BMW Group for any changes/additions to the technical data.

Information status: **November 2016**
Technical training.

cardiagn.com

G30 Driver Assistance Systems

Contents

1. Introduction **1**
1.1. Further information 2

2. G30 Bus Overview **3**

3. KAFAS **6**
3.1. Functional limitations 8

4. Optional Equipment System **10**

5. Overview of Sensors **11**

6. Intelligent Safety **13**
6.1. Overview of the configuration menu 15

7. Collision Warning **18**
7.1. Warning and braking function 19
7.1.1. Displays 19
7.2. Operation 20
7.3. Limits of the system 21

8. Lane Departure Warning **22**
8.1. Active steering intervention 24
8.2. Deactivation criteria 25
8.3. Limits of the system 25

9. Blind Spot Detection **26**
9.1. Active steering intervention 28
9.2. Limits of the system 29

10. Side Collision Avoidance **30**
10.1. Limits of the system 33

11. Intersection Warning **34**
11.1. Functional principle 34
11.1.1. Warning 35
11.2. Limits of the system 37

12. Road Sign Recognition **38**
12.1. Operation 38
12.2. Limits of the system 39

13. Proactive Driving Assistant **40**

cardiagn.com

G30 Driver Assistance Systems

Contents

13.1. Operation ... 41
13.2. Limits of the system ... 41

14. Fatigue and Focus Alert ... 42
14.1. Operation ... 42
14.2. Limits of the system ... 43

15. Night Vision ... 44
15.1. Operation ... 47
15.2. Limits of the system ... 48

16. Cameras ... 49
16.1. Surround View ... 49
16.1.1. Automatic camera angle ... 50
16.1.2. Side view ... 50
16.1.3. Front camera ... 50
16.1.4. Panorama View ... 50
16.1.5. Rear view camera ... 54
16.1.6. Moving camera angle ... 54
16.2. Overview of exterior camera operating menu ... 56
16.3. Assistant function ... 57
16.3.1. Car wash view ... 58
16.3.2. Side protection ... 59
16.3.3. Door opening angle ... 60
16.4. Remote 3D View ... 60
16.4.1. Functional principle ... 61
16.5. System components ... 63
16.5.1. Front camera ... 63
16.5.2. Top view camera ... 64
16.5.3. Rear view camera ... 65
16.5.4. TRSVC control unit ... 67

17. Park Distance Control ... 68
17.1. System components ... 68
17.2. Auto PDC ... 69
17.3. Active Park Distance Control ... 70
17.4. Side protection ... 70
17.4.1. Functional principle ... 71
17.5. Operation ... 72
17.6. Deactivation criteria ... 72
17.7. Limits of the system ... 73

cardiagn.com

G30 Driver Assistance Systems

Contents

18. Cross Traffic Alert 74
18.1. Functional principle 74
18.2. Cross Traffic Alert Rear 75
18.3. Cross Traffic Alert Front 75
18.4. Displays 76
18.5. Operation 78
18.6. Limits of the system 79

19. Parking Maneuvering Assistant 80
19.1. Parallel parking/perpendicular parking 80
19.1.1. Curbside parking 80
19.1.2. Perpendicular parking 81
19.2. System components 81
19.3. System wiring diagram 83
19.4. Control unit 86
19.5. Functional principle 86
19.5.1. Personal responsibility 87
19.6. Functional prerequisites 87
19.6.1. Measuring parking spaces 88
19.7. Operation 89
19.7.1. Park procedure 90
19.7.2. Deactivation criteria 90
19.8. Limits of the system 91

20. Remote Control Parking 92
20.1. Operation 93
20.1.1. Cut-off events 95
20.2. Requirements on the parking space 96
20.3. System overview 97
20.4. Limits of the system 98

21. Cruise Control 99
21.1. Introduction 99
21.2. Cruise control with braking function 99
21.2.1. Operation 99
21.3. Active Cruise Control with Stop&Go function 100
21.3.1. Operation 107

22. Speed Limit Warning 111
22.1. Operation 111

cardiagn.com

G30 Driver Assistance Systems

Contents

23. Lateral Guidance Assistants **112**
23.1. Launch timeline 112

24. Lane Keeping & Traffic Jam Assistants **114**
24.1. Functional principle 114
24.1.1. Hands-off-Detection 116
24.1.2. Functional prerequisites 116
24.1.3. Lane change 117
24.1.4. Function logic 117
24.1.5. Steering interventions 118
24.1.6. Operation 119
24.1.7. Deactivation criteria 121
24.1.8. Limits of the system 121

25. Active Lane Keeping Assistant **122**
25.1. Side Collision Avoidance 122
25.1.1. Reduced Side Collision Avoidance 122
25.2. Lane Departure Warning 123
25.3. Blind Spot Detection 124

26. Evasion Aid **125**
26.1. Functional principle 125
26.2. System overview 128
26.3. Operation 130
26.4. Functional prerequisites 130
26.5. Limits of the system 131

cardiagn.com

G30 Driver Assistance Systems

1. Introduction

The most versatile range of Driver Assistance Systems ever for a BMW model was launched with the introduction of the G12.

Numerous innovative systems have been introduced and have opened the way for highly automated driving. It is planned that the technical prerequisites will have been laid for an “Autobahn pilot” by 2020 so that we will be able to offer highly automated driving for the first time.

At present, however, the appropriate legal foundations have not been laid for autonomous driving.

Drivers are still expected to drive with both hands on the steering wheel, although systems are already in place to drive the vehicle autonomously in certain situations.

The already comprehensive range of Driver Assistance Systems has been expanded again in the G30 to include revolutionary new systems. Systems such as Intersection Warning are in use. Evasion Aid is presented for the first time with the launch of the G30. For even greater convenience, the restart time on the Active Cruise Control Stop&Go function has been increased, and the detection of more information and the incorporation of further sensors has made more driver-like driving characteristics possible.

A further feature among the camera systems is the Remote 3D View function which makes it possible to transmit an image of the parked vehicle to mobile devices.

The interplay between the varied and intelligent Driver Assistance Systems supports the driver in every respect; from making driving more comfortable to providing the reassuring feeling of safety on all roads.

The Driver Assistance Systems help to make the driver's life easier by:

- Providing the driver with information
- Prompting the driver with suggestions
- Automatically intervening in the driving process

This reference manual contains an overview of all the Driver Assistance Systems used in the G30:

- Camera-based collision warning
- Frontal Collision Warning with City Collision Mitigation
- Daytime Pedestrian Protection
- Lane Departure Warning
- Blind Spot Detection
- Side Collision Avoidance
- Intersection Warning
- Road Sign Recognition
- Proactive Driving Assistant
- Fatigue and Focus Alert
- Night vision
- Camera systems
- Park Distance Control

cardiagn.com

G30 Driver Assistance Systems

1. Introduction

- Cross Traffic Alert
- Parking Maneuvering Assistant
- Remote Control Parking
- Speed control
- Speed limit warning
- Traffic Jam Assistant
- Active Lane Keeping Assistant with Side Collision Avoidance
- Evasion Aid

Identifying road users driving ahead as well as detecting objects and lane edges are among the most important prerequisites for the Driver Assistance Systems. This applies not only for the far range but also the close range.

The optional functions available for the G30 are implemented either as camera-based systems with a shared camera and integrated control unit, or using sensors such as ultrasonic or radar sensors. Evaluation signals provided by various control units (for example, from the Advanced Crash Safety Module (ACSM)) are also taken into consideration.

1.1. Further information

The Driver Assistance Systems in the new BMW 5 Series builds on those of the BMW 7 Series G12. Accompanying information for the topics listed below may be found in the “G12 Driver Assistance Systems” reference manual.

Topic	reference manual
Proactive Driving Assistant	G12 Driver Assistance Systems (section 12)
Auto PDC	G12 Driver Assistance Systems (section 16.2)
Active Park Distance Control	G12 Driver Assistance Systems (section 16.3)
Remote Control Parking	G12 Driver Assistance Systems (section 17)
Parking Maneuvering Assistant	G12 Driver Assistance Systems (section 19)
Hands-off-Detection	G12 Driver Assistance Systems (section 23.1.1)

For more information on the operating concept of the Driver Assistance Systems, please refer to the Owner's Handbook.

cardiagn.com

G30 Driver Assistance Systems

2. G30 Bus Overview

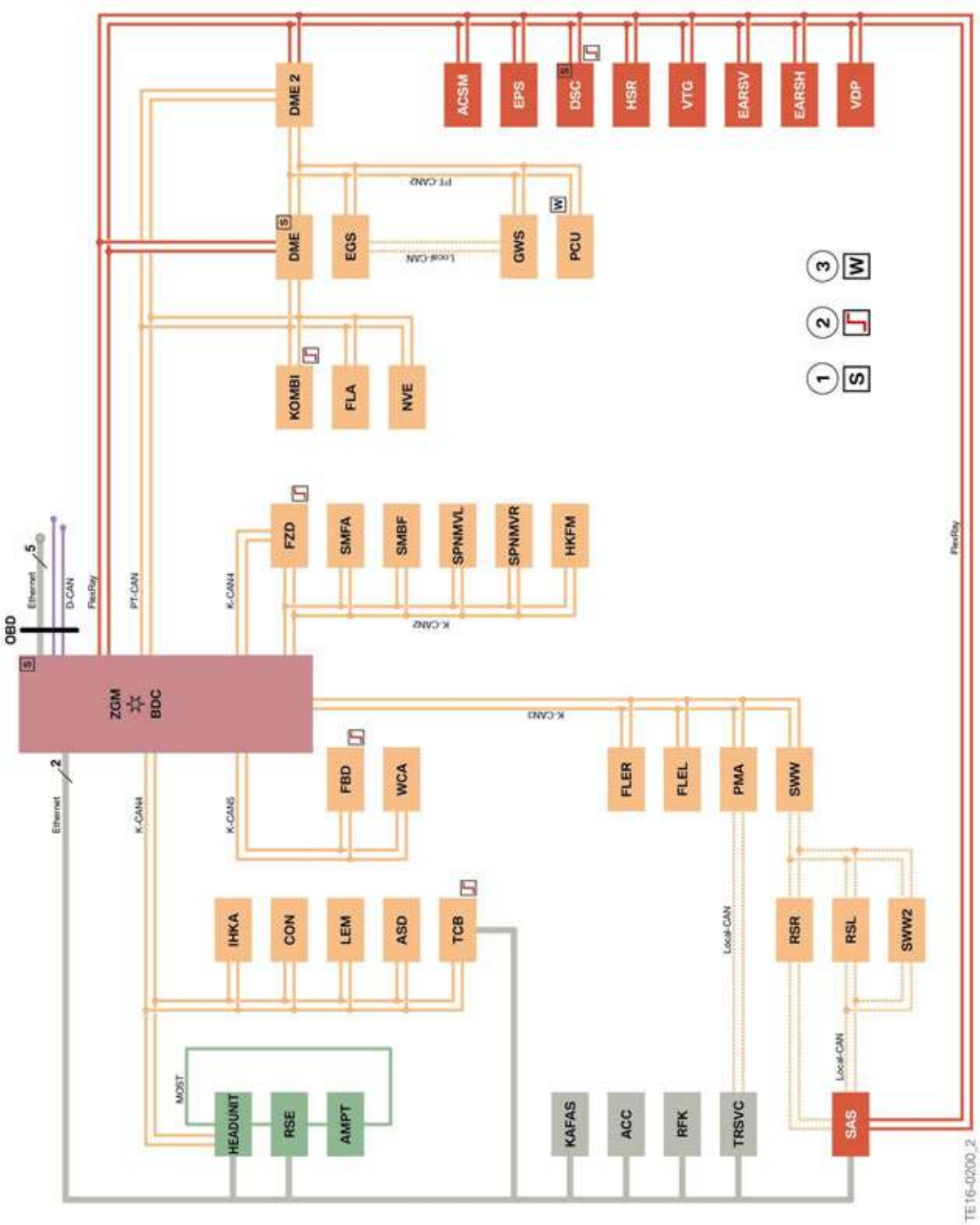

G30 Bus overview

cardiagn.com

G30 Driver Assistance Systems

2. G30 Bus Overview

Index	Explanation
ACC	Active Cruise Control
ACSM	Advanced Crash Safety Module
AMPT	Top HiFi amplifier
ASD	Active Sound Design
BDC	Body Domain Controller
CON	Controller
DME	Digital Motor Electronics
DME2	Digital Engine Electronics 2
DSC	Dynamic Stability Control
EARSH	Electric active roll stabilization rear
EARSV	Electric active roll stabilization front
EGS	Electronic transmission control
EPS	Electromechanical Power Steering
FLA	High-beam assistant
FLER	Frontal Light Electronics Right
FLEL	Frontal Light Electronics Left
FZD	Roof function center
GWS	Gear selector
HEADUNIT	Head unit
HKFM	Tailgate function module
HSR	Rear axle slip angle control
IHKA	Integrated automatic heating / air conditioning
KAFAS	Camera-based driver support systems
KOMBI	Instrument panel
LEM	Light effect manager
NVE	Night Vision Electronics
PCU	Power Control Unit
PMA	Parking Maneuvering Assistant
RFK	Rear view camera
RSE	Rear Seat Entertainment
RSL	Radar sensor, left (also known as Short Range Radar (SRR) in Technical Systems)
RSR	Radar sensor, right (also known as Short Range Radar (SRR) in Technical Systems)
SAS	Optional Equipment System
SMBF	Seat module, passenger

cardiagn.com

G30 Driver Assistance Systems

2. G30 Bus Overview

Index	Explanation
SMBFH	Seat module, passenger, rear
SMFA	Seat module, driver
SMFAH	Seat module, driver, rear
SPNMHL	Seat pneumatics module back left
SPNMHR	Seat pneumatics module back right
SPNMVL	Seat pneumatics module front left
SPNMVR	Seat pneumatics module front right
SWW	Blind Spot Detection (primary) (also known as Short Range Radar (SRR) in Technical Systems)
SWW2	Blind Spot Detection (secondary) (also known as Short Range Radar (SRR) in Technical Systems)
TCB	Telematic Communication Box
TRSVC	Top Rear Side View Camera
VDP	Vertical Dynamic Platform
VTG	Transfer box
WCA	Wireless charging station
ZGM	Central gateway module
1	Start-up node control units for starting and synchronizing the FlexRay bus system
2	Control units with wake-up authorisation
3	Control units also connected at terminal 15WUP

cardiagn.com

G30 Driver Assistance Systems

3. KAFAS

Since the requirements on the KAFAS camera have further increased in the new BMW 5 Series, the KAFAS stereo camera, familiar from the G12, is also used on the G30.

KAFAS stereo camera

The KAFAS stereo camera is calibrated within a distance of approximately 1.25 mi (2 km) during driving.

The KAFAS stereo camera is the key element of the following systems:

- Frontal Collision Warning with City Collision Mitigation
- Daytime Pedestrian Protection
- Lane Departure Warning
- Road Sign Recognition

The KAFAS stereo camera plays a supporting role in the following systems:

- Active Cruise Control With Stop&Go Function
- Traffic Jam Assistant
- Active Lane Keeping Assistant with Side Collision Avoidance
- Intersection Warning

The KAFAS stereo camera installed in the mirror base of the interior mirror on the windscreen monitors the area in front of the vehicle.

cardiagn.com

G30 Driver Assistance Systems
3. KAFAS

G30 KAFAS stereo camera

Index	Explanation
1	KAFAS stereo camera
2	Rain-light-solar-condensation sensor
3	Photosensor for electrochromic interior mirror

The KAFAS stereo camera has a detection range of up to approximately 130 ft (40 m) ahead of the vehicle and up to approximately 16 ft (5 m) in front of the vehicle on the right and left. The overall detection range of the KAFAS stereo camera is approximately 1600 ft (500 m).

The tasks of the KAFAS stereo camera are:

- Person recognition
- Road Sign Recognition
- Lane detection

cardiagn.com

G30 Driver Assistance Systems
3. KAFAS

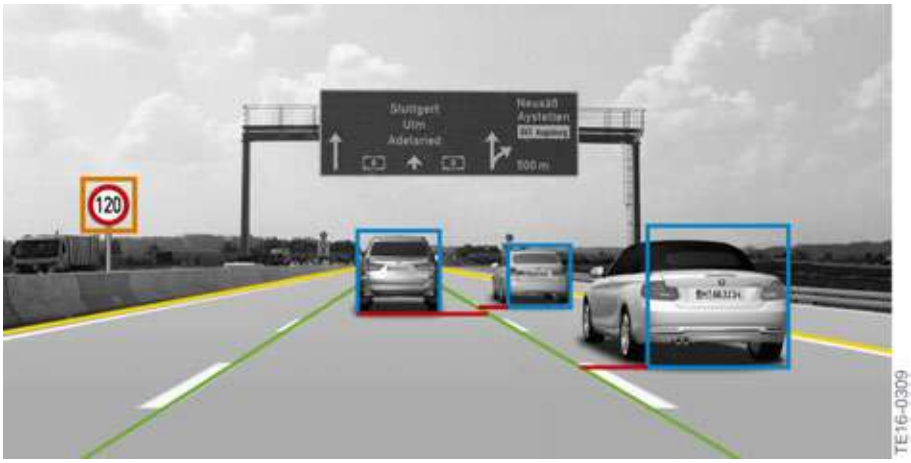

KAFAS stereo camera detection range

3.1. Functional limitations

The function of the KAFAS stereo camera and thus the function of the corresponding Driver Assistance Systems may be impaired due to the physical limits of the optical systems, for example in the following situations:

- Heavy fog, rain, spray or snow.
- Strong light in the camera lens.
- If the field of view of the KAFAS stereo camera or the windscreen is dirty.
- On tight bends.
- If boundary lines are missing, worn, poorly visible, converging or diverging, or not clearly recognizable, as may be the case when road construction is being performed.
- If boundary lines are covered by snow, ice, dirt or water.
- If boundary lines are covered by objects.
- If driving at close proximity to a vehicle driving ahead.
- If the windscreen in front of the interior mirror is misted over, soiled or covered by stickers, e.g. parking permits, etc.
- Up to 10 seconds after driving readiness is activated via the start/stop button.
- During the calibration process for the KAFAS stereo camera immediately after vehicle delivery or a camera change.

cardiagn.com

G30 Driver Assistance Systems

3. KAFAS

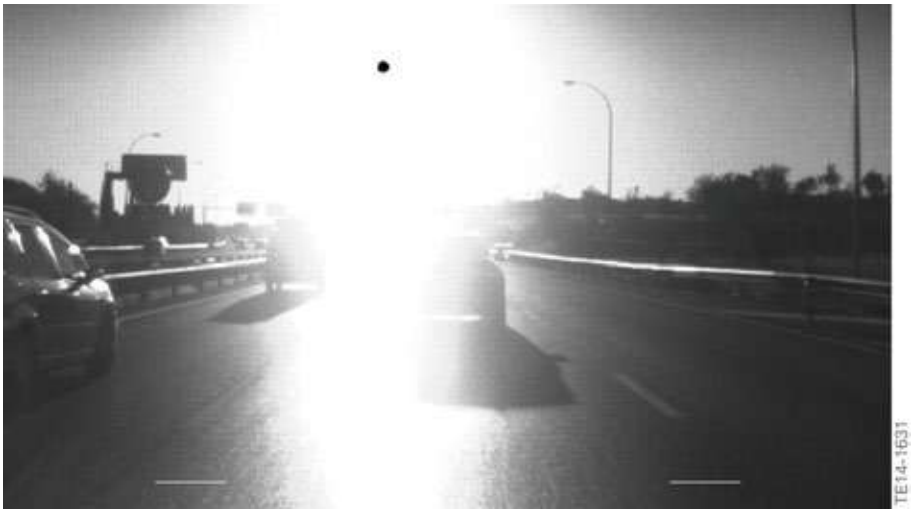

Example of limits of the KAFAS stereo camera

Due to functional limitations and system restrictions it may transpire that warnings and alerts are not issued, are issued too late or are unwarranted. Therefore, be attentive in order to be able to actively intervene at any time. Otherwise, there is a risk of an accident.

cardiagn.com

G30 Driver Assistance Systems

4. Optional Equipment System

The G30 also features the Optional Equipment System (SAS) control unit which is already familiar and which provides a host of Driver Assistance System functions.

Possible functions:

- Frontal Collision Warning with City Collision Mitigation
- Daytime Pedestrian Protection
- Dynamic Brake Control
- Distance information
- Cruise control with braking function
- Active Cruise Control with Stop&Go function
- Traffic Jam Assistant
- Active Lane Keeping Assistant with Side Collision Avoidance
- Evasion Aid
- Speed Limit Information
- Blind Spot Detection
- Lane Departure Warning
- Cross Traffic Alert
- Intersection Warning
- Parking Maneuvering Assistant
- Remote Control Parking
- Proactive Driving Assistant

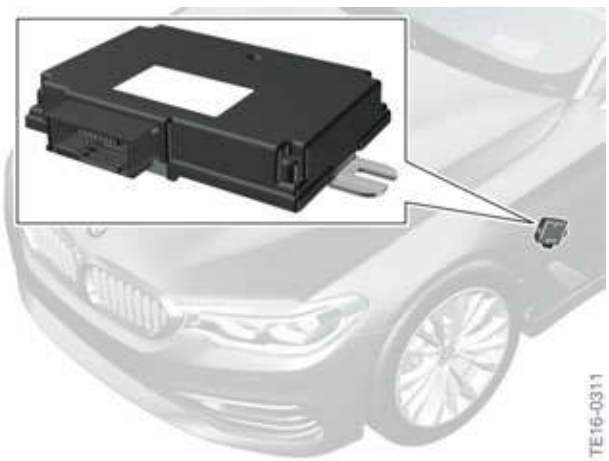

G30 Control unit for Optional Equipment System (SAS)

cardiagn.com

G30 Driver Assistance Systems

5. Overview of Sensors

The graphic below provides an overview of the main sensors used in the G30 for the Driver Assistance Systems and shows their installation locations.

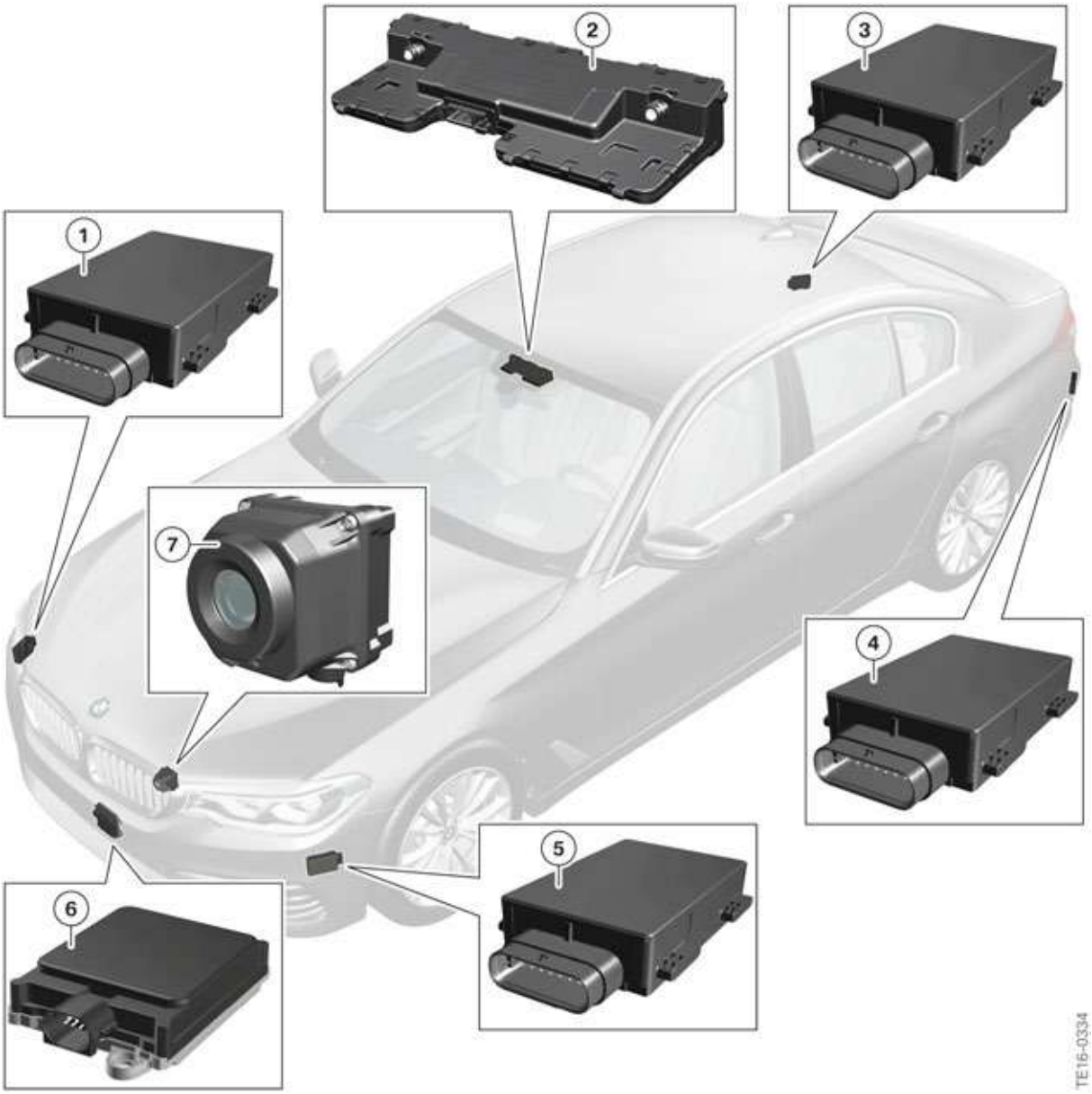

G30 Overview of sensors

cardiagn.com

G30 Driver Assistance Systems

5. Overview of Sensors

Index	Explanation
1	Control unit for radar sensor, right (RSR) (also known as Short Range Radar (SRR) in Technical Systems)
2	KAFAS stereo camera
3	Blind Spot Detection (primary) (also known as Short Range Radar (SRR) in Technical Systems)
4	Blind Spot Detection (secondary) (also known as Short Range Radar (SRR) in Technical Systems)
5	Control unit for radar sensor, left (RSL) (also known as Short Range Radar (SRR) in Technical Systems)
6	Active Cruise Control (ACC) (also known as Full Range Radar Sensor (FRR) in Technical Systems)
7	Night Vision camera

cardiagn.com

G30 Driver Assistance Systems

6. Intelligent Safety

Due to the ever increasing amount of traffic on our roads, Driver Assistance Systems in vehicles continue to gain in importance. The systems have different functions: some gather information to help the driver in the decision-making process, while others take on the driver's roles in monotonous traffic situations or intervene to make corrections.

The Driver Assistance Systems support the driver on highways, single-lane roads and in urban environments. Systems such as the Daytime Pedestrian Protection provide support in urban traffic, for instance. Night Vision can assist the driver when driving on single-lane roads with adjacent woodland (deer crossings, etc.). The Lane Departure Warning and Blind Spot Detection as well as the Side Collision Avoidance provide even more safety in traffic. Accidents can be avoided through automatic brake interventions, active steering interventions or a combination of both.

Once more, new Driver Assistance Systems are being presented with the launch of a new BMW 5 Series. The Intelligent Safety menu has been adapted to the new systems accordingly.

Depending on the vehicle equipment, the driver has a multitude of individual configurations available in the Intelligent Safety menu. For some systems, no configuration options are provided by the operating concept. Thus, for example, Evasion Aid can only be deactivated by switching off all Intelligent Safety systems (ALL OFF).

Depending on the vehicle equipment, Intelligent Safety consists of one or several systems, which can help to avoid a potential collision. The following systems are offered in the G30:

- Daytime Pedestrian Protection
- Night Vision with person and animal recognition
- Lane Departure Warning
- Blind Spot Detection
- Side Collision Avoidance
- Evasion Aid
- Frontal Collision Warning with City Collision Mitigation

The Intelligent Safety button, already familiar from other BMW models, enables the Driver Assistance Systems to be operated centrally. This means the systems can be switched on or off using a button and the submenu can be called up to personalize the settings.

cardiagn.com

G30 Driver Assistance Systems

6. Intelligent Safety

G30 Intelligent Safety button

Index	Explanation
1	Intelligent Safety button

Press button

- The "Intelligent Safety" menu is displayed on the Central Information Display (CID).
  Settings can be made using the controller. The individual settings are stored for the respective ID transmitter used.

Press and release button

- When all Intelligent Safety systems are switched on:
  Intelligent Safety systems are switched off individually depending on the individual setting.
- When all Intelligent Safety systems are not switched on:
  All Intelligent Safety systems are switched on.

Press button for an extended period

- All Intelligent Safety systems are switched off.

cardiagn.com

G30 Driver Assistance Systems

6. Intelligent Safety

G30 Status indicator light (Intelligent Safety button)

Index	Explanation
A	All Intelligent Safety systems are switched on
B	Some Intelligent Safety systems are switched off or sub-function settings have been changed
C	All Intelligent Safety systems are switched off

The Intelligent Safety systems are automatically active after each engine start via the START-STOP button.

6.1. Overview of the configuration menu

The system is operated by pressing the Intelligent Safety button and using a menu to configure the Intelligent Safety systems on the Central Information Display (CID).

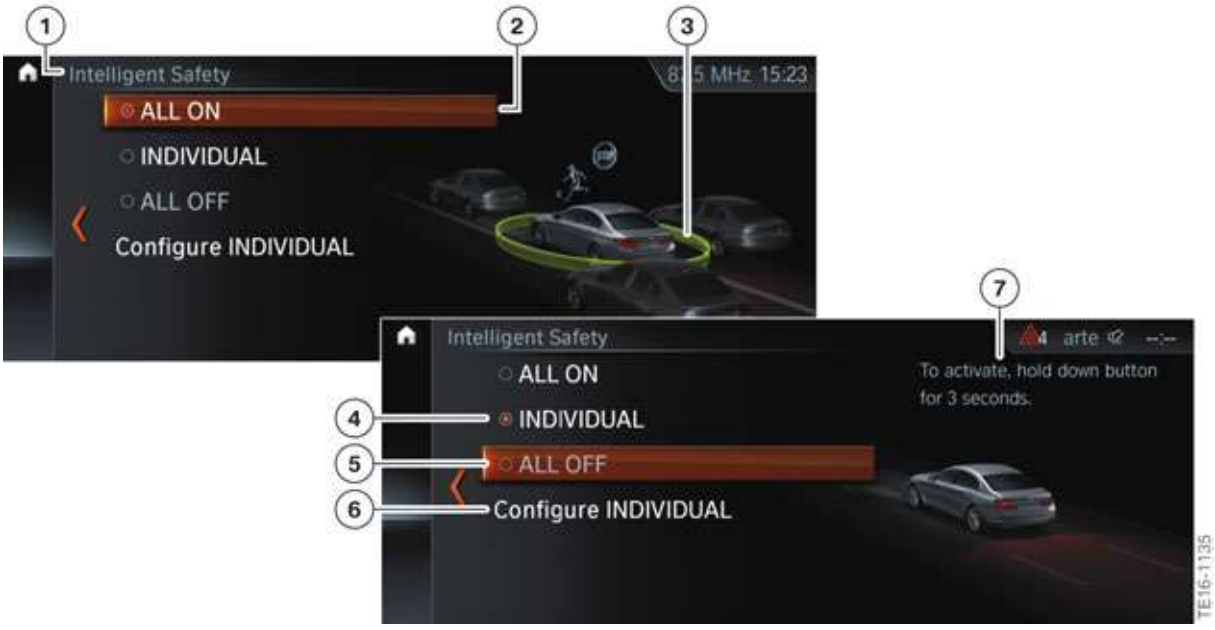

G30 Intelligent Safety overview configuration menu

cardiagn.com

G30 Driver Assistance Systems

6. Intelligent Safety

Index	Explanation
1	"Intelligent Safety" configuration menu
2	"ALL ON" selection
3	Note for the driver: the colored circle shows the driver the activation status of the Intelligent Safety systems. The color of the circle always matches the color of the Intelligent Safety button indicator light.
4	"INDIVIDUAL" selection
5	"ALL OFF" selection
6	"Configure INDIVIDUAL"
7	Note for the driver: In this example the information is being provided that the driver must hold the controller down for three seconds after selecting the ALL OFF menu item to deactivate the Intelligent Safety systems.

"ALL ON"

- All Intelligent Safety systems are switched on. The basic settings are activated for the subfunctions, for example the warning time setting. The Intelligent Safety button lights up green.

"INDIVIDUAL"

- The Intelligent Safety systems are switched on in accordance with the individual settings. Depending on the vehicle equipment, the Intelligent Safety systems can be configured individually. The individual settings are activated and stored for the respective ID transmitter used.

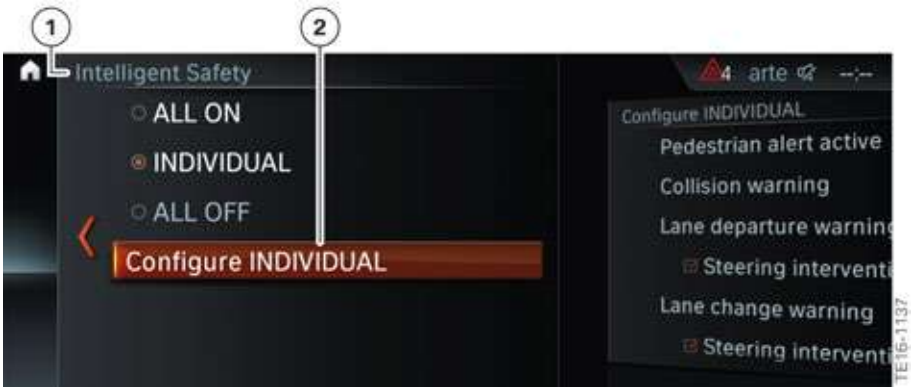

G30 Intelligent Safety ("Configure INDIVIDUAL" selection)

Index	Explanation
1	"Intelligent Safety" configuration menu
2	"Configure INDIVIDUAL"

cardiagn.com

G30 Driver Assistance Systems

6. Intelligent Safety

G30 Intelligent Safety "INDIVIDUAL" configuration menu (settings options)

Index	Explanation
1	"Configure INDIVIDUAL"
2	"Pedestrian alert active"
3	"Collision warning" (selected setting: Medium)
4	"Lane Departure Warning" (selected setting: Always)
5	"Steering intervention"
6	"Blind Spot Detection" (selected setting: Medium)
7	"Steering intervention"
8	"Side Collision Avoidance"
9	“Give way warning” (not for US) (setting selected: Early)

As soon as a setting is changed in the menu, all the settings the driver has previously configured are activated. The Intelligent Safety button lights up orange.

"ALL OFF"

- All Intelligent Safety systems are switched off. The Intelligent Safety button does not light up.

cardiagn.com

G30 Driver Assistance Systems

7. Collision Warning

The camera-based collision warning is part of the Active Driving Assistant optional equipment (OE 5AS) in the G30 and is implemented using the KAFAS stereo camera.

The collision warning in the new BMW 5 Series contains the familiar Frontal Collision Warning with City Collision Mitigation and Daytime Pedestrian Protection functions.

In vehicles with the Active Driving Assistant Plus optional equipment (OE 5AT), the cruise control radar sensor is also used to control the collision warning.

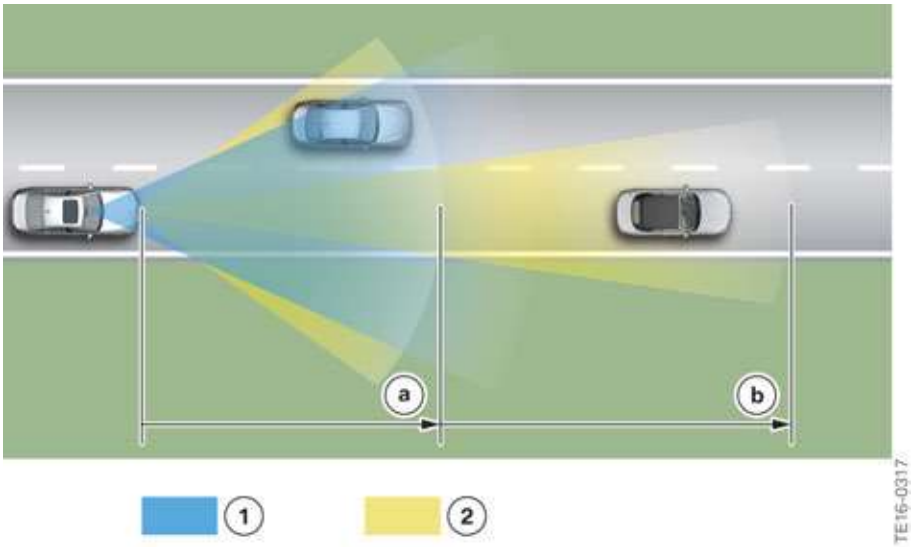

G30 Fusion of the KAFAS stereo camera/ACC radar sensor (diagram of the monitoring ranges)

Index	Explanation
a	Close range
b	Long distance
1	KAFAS stereo camera detection range
2	Detection range of the radar sensor

Vehicles with the Active Driving Assistant Plus optional equipment (OE 5AT) have the Active Cruise Control with Stop&Go function integrated as standard.

The system warns the driver in situations where a collision is imminent. The early warning, a visual signal, is issued first to draw the driver's attention to the situation. If the situation becomes more critical, an acute early warning in the form of a visual and acoustic signal is issued. The nature of the warning is such that the driver can still prevent a collision providing he acts quickly.

The collision warning is dependent on the vehicle's own driving speed. The distance measured for the collision warning is significantly lower than the legally required minimum distance. It is therefore the responsibility of the driver to adhere to the legal minimum distance.

cardiagn.com

G30 Driver Assistance Systems

7. Collision Warning

7.1. Warning and braking function

7.1.1. Displays

Symbols	Explanation
	Early warning: • Vehicle symbol lights up red • Increase distance and brake if necessary
	Acute warning: • Vehicle symbol flashes red and a signal sounds • Request for intervention by braking and evasive action, if required
	Acute warning: • Person symbol flashes red and a signal sounds • Request for intervention by braking and evasive action, if required

The acute warning does not relieve the driver of his responsibility to adapt the speed and driving style to the traffic conditions.

Additional information regarding the collision warning may be found in the “G12 Driver Assistance Systems” reference manual (sections 7.1 and 7.2).

cardiagn.com

7.2. Operation

The collision warning and pedestrian warning are switched on and off using the Intelligent Safety button.

G30 Intelligent Safety button

Index	Explanation
1	Intelligent Safety button

The point at which the early collision warning is issued can be configured in the "Intelligent Safety systems" menu on the Central Information Display (CID).

The acute warning cannot be deactivated separately. The timing of the acute warning also cannot be adjusted. If the acute warning is not to be issued, the "collision warning" front protective function must be deactivated. The collision warning can be switched off by holding down the Intelligent Safety button.

It is also not possible to configure or deactivate the pedestrian warning separately. The "collision warning" front protective function must be also deactivated by holding down the Intelligent Safety button in order to deactivate the pedestrian warning function.

cardiagn.com

7.3. Limits of the system

The collision warning has a limited capacity for detection.

As a result, incorrect or delayed warnings may occur. It is possible the following vehicles are not detected:

- A slow vehicle when driving off at high speed.
- Vehicles that suddenly swerve or decelerate rapidly.
- Vehicles with an unusual rear view or with insufficiently visible rear lights.
- Partially concealed vehicles.
- Two-wheeled vehicles travelling ahead.

Functional limitations

The function of the KAFAS stereo camera and thus the function of the corresponding Driver Assistance Systems may be impaired in the following situations, for example:

- Heavy fog, rain, spray or snow.
- Insufficient light.
- Strong light in the camera lens.
- If the field of view of the KAFAS stereo camera or the windscreen is dirty.
- On sharp bends.
- With pedestrians up to approximately 2.5 ft (80 cm) in height.
- Up to 10 seconds after engine start via the START-STOP button.
- During the calibration process for the KAFAS stereo camera immediately after vehicle delivery or a camera change.

Due to functional limitations and system restrictions it may transpire that warnings and alerts are not issued, are issued too late or are unwarranted. Therefore, be attentive in order to be able to actively intervene at any time. Otherwise, there is a risk of an accident.

cardiagn.com

G30 Driver Assistance Systems

8. Lane Departure Warning

The Lane Departure Warning is an element of the Active Driving Assistant, optional equipment (OE 5AS) and the Active Driving Assistant Plus, optional equipment (OE 5AT).

The Lane Departure Warning detects lane markings from a speed of approximately 43 mph (70 km/h) and warns the driver against unintentionally leaving the lane.

The information required about usable roadway and lane markings is provided by the KAFAS stereo camera. Based on the calculated positions, lane edges and curves in relation to the relative position of the driver's vehicle, a corresponding warning is issued.

If the driver crosses the lane marking unintentionally (without using the turn indicator) or leaves the road boundary, he is warned abruptly by the steering wheel vibrating gently and has the opportunity to react accordingly. The vibration in the steering wheel can be compared to the vibration effect when driving over a profiled road marking.

In the settings menu the driver can set the desired strength of the abrupt warnings on the steering wheel via the iDrive.

G30 Steering wheel vibration settings menu on CID

Index	Explanation
1	Steering wheel vibration menu
2	Additional note for the driver
3	"Strong"
4	"Medium"
5	"Light"

If the driver uses the turn indicator when moving across to another lane, the Lane Departure Warning recognizes that this is an intentional lane change and a warning is not issued.

cardiagn.com

G30 Driver Assistance Systems

8. Lane Departure Warning

The Lane Departure Warning can be configured individually in the Intelligent Safety system submenu.

G30 Intelligent Safety view on the CID (Lane Departure Warning)

Index	Explanation
1	"Configure INDIVIDUAL" menu
2	"Lane Departure Warning" (selected setting: Always)
3	"Lane Departure Warning" (settings options: Always, Reduced, Off)

The individual settings applied by the driver are saved for the driver profile currently in use.

Displays in the Instrument Cluster (KOMBI)

Symbol	Explanation
	At least one lane boundary has been detected and warnings can be issued.

cardiagn.com

G30 Driver Assistance Systems

8. Lane Departure Warning

8.1. Active steering intervention

In vehicles with the Side Collision Avoidance (included in Active Driving Assistant Plus, optional equipment OE 5AT), the driver is assisted by another measure known as "active steering intervention".

If the driver does not react to the warning issued by the Lane Departure Warning system and crosses the lane marking, he is assisted to stay in lane by a brief active steering intervention.

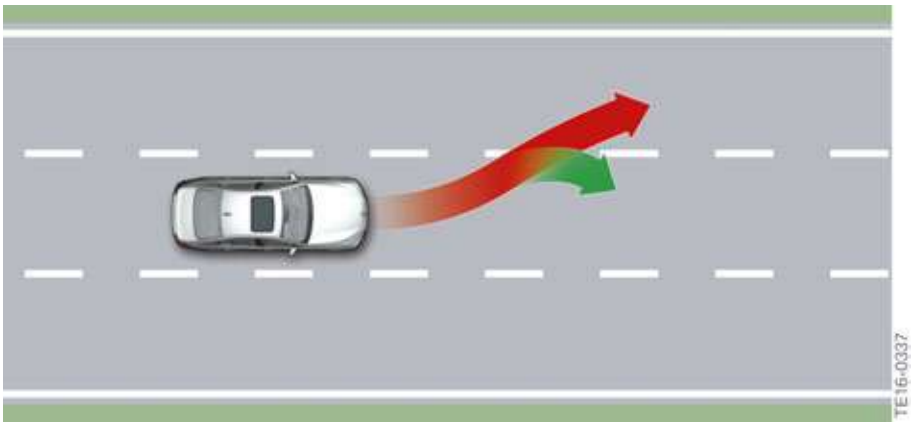

G30 Lane Departure Warning (active steering intervention)

The active steering intervention can be felt on the steering wheel, but can be overridden by the driver at any time. If the driver does override the intervention, the active steering intervention is cancelled.

The "steering intervention" for the Lane Departure Warning can be switched on and off via the iDrive menu in vehicles with the Side Collision Avoidance by making the following selection via the controller:

- "My Vehicle"
- "Vehicle settings"
- "Intelligent Safety"
- "Steering intervention"

The configuration menu can be accessed quickly by pressing the Intelligent Safety button.

G30 Intelligent Safety view on the CID (Lane Departure Warning with active steering intervention)

cardiagn.com

Index	Explanation
1	"Configure INDIVIDUAL" menu
2	"Steering intervention" (switching the steering intervention for Lane Departure Warning on and off)

Steering interventions are not initiated when the trailer socket is in use, such as when a trailer is being towed or a bicycle carrier is mounted.

8.2. Deactivation criteria

The Lane Departure Warning is available at a speed range from 43 – 130 mph (70 km/h – 210 km/h).

A warning is not issued in the following situations:

- Use of the turn indicator
- In construction zones
- Lane is narrower than 8½ ft (2.60 m)

The warning is cancelled in the following situations:

- Automatically after approximately 3 seconds
- As soon as the driver moves back into his own lane
- The turn indicator is used
- When sharp braking or steering maneuvers are made and when the Dynamic Stability Control (DSC) intervenes

8.3. Limits of the system

The function of the system may not be available or may only be available to a limited extent in the following situations:

- Heavy fog, rain or snow.
- At sharp bends or on narrow roadways.
- If boundary lines are covered by snow, ice, dirt or water.
- If boundary lines are covered by objects.
- If boundary lines are missing, worn, poorly visible, converging or diverging, or not clearly recognizable, such as when driving through construction zones.

⚠

The system does not replace the personal assessment of the road and the traffic situation. The Lane Departure Warning is only intended to assist the driver. When active Lane Departure Warnings are issued, the steering wheel should not be moved through any unnecessarily heavy-handed actions.

cardiagn.com

G30 Driver Assistance Systems

9. Blind Spot Detection

The Blind Spot Detection system can detect traffic situations that could pose a risk if the driver changes lane. These traffic situations include vehicles approaching quickly from behind or vehicles in the driver's blind spot. The system operates within a speed range between 12 – 130 mph (20 – 210 km/h).

The Blind Spot Detection function may also be known as “Lane change warning” in technical systems.

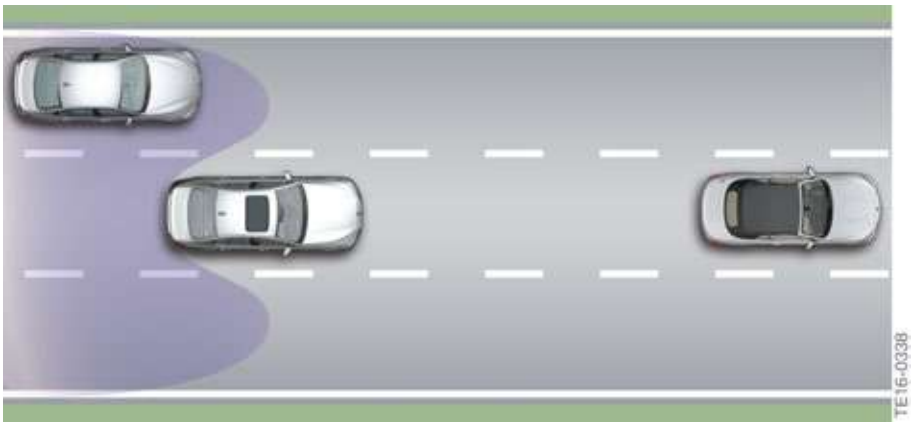

G30 Vehicle detection using radar sensors (Blind Spot Detection)

The control units (radar sensors) for the Blind Spot Detection (SWW) are located under the rear bumper.

G30 Blind Spot Detection (SWW) (radar sensors)

The control unit for the Blind Spot Detection (primary) (SWW) is installed on the right and the control unit for the Blind Spot Detection (secondary) (SWW2) is installed on the left.

When a vehicle is detected and the system is activated, the driver is informed of the situation by an unobtrusive indicator in the exterior mirror. By having this information before making a lane change maneuver, the driver can confidently prepare for the lane change and avoid critical situations from the outset.

cardiagn.com

G30 Driver Assistance Systems

9. Blind Spot Detection

The Blind Spot Detection indicators are located in the exterior mirror glass.

G30 Signal unit (LED) in mirror glass

The driver must steer the vehicle back into his own lane to avoid a potential collision.

The Blind Spot Detection can be configured individually in the Intelligent Safety system submenu.

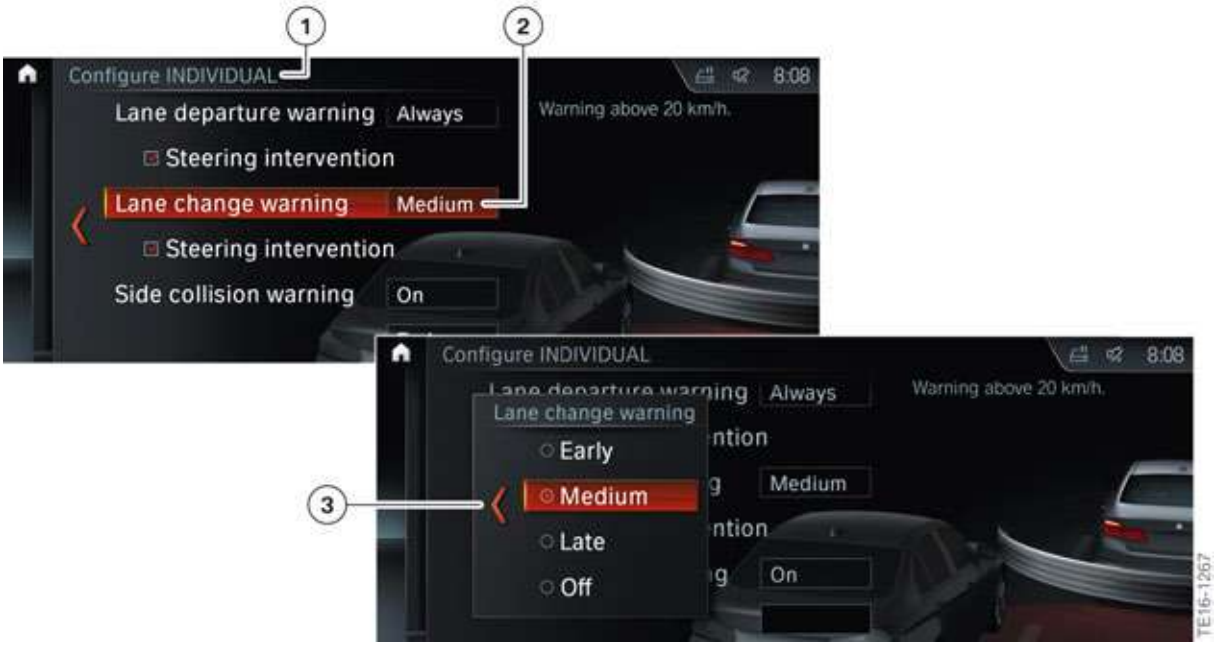

G30 Intelligent Safety view on the CID (Blind Spot Detection)

cardiagn.com

9. Blind Spot Detection

Index	Explanation
1	"Configure INDIVIDUAL" menu
2	"Blind Spot Detection" (selected setting: Medium)
3	"Blind Spot Detection" (settings options: Early, Medium, Late, Off)

9.1. Active steering intervention

Depending on the setting in the "Intelligent Safety" menu, a brief active steering intervention is initiated by the system that assists in moving the vehicle back into the original lane for vehicles with the Side Collision Avoidance function, which is included in the Active Driving Assistant Plus optional equipment (OE 5AT).

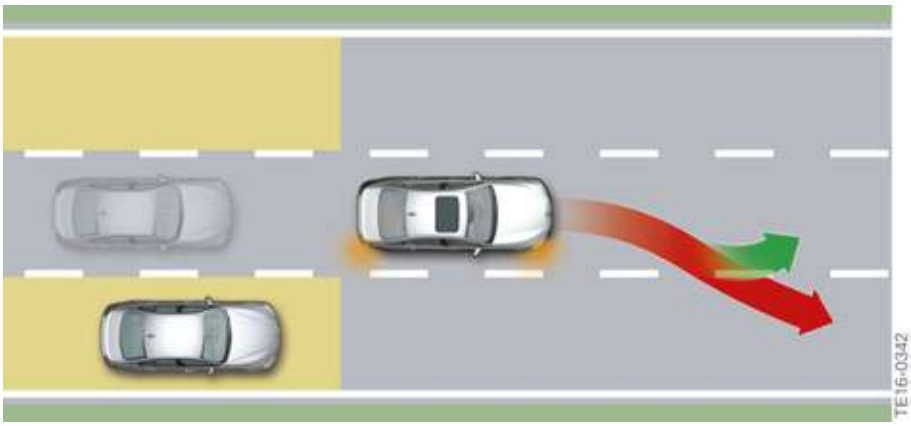

G30 Blind Spot Detection (active steering intervention)

The corresponding Blind Spot Detection indicator flashes in the exterior mirror at the same time.

The steering intervention is initiated within a speed range of between 43 and 130 mph (70 km/h and 210 km/h).

The active steering intervention can be felt on the steering wheel, but can be overridden by the driver at any time. If the driver does override the intervention, the active steering intervention is cancelled.

The "steering intervention" for the Blind Spot Detection can be switched on and off via the iDrive menu in vehicles with the Side Collision Avoidance by making the following selection via the controller:

- "My Vehicle"
- "Vehicle settings"
- "Intelligent Safety"
- "Steering intervention"

cardiagn.com

The configuration menu can be accessed quickly by pressing the Intelligent Safety button.

G30 Intelligent Safety view on the CID (Blind Spot Detection with active steering intervention)

Index	Explanation
1	"Configure INDIVIDUAL" menu
2	"Steering intervention" (switching the steering intervention for Blind Spot Detection on and off)

9.2. Limits of the system

The function of the system may not be available or may only be available to a limited extent in the following situations:

- Heavy fog, rain or snow.
- At sharp bends or on narrow roadways.
- If the bumper is dirty, iced up or stickers are placed over it.
- If the speed of the approaching vehicle is much higher than the driver's speed.

cardiagn.com

G30 Driver Assistance Systems

10. Side Collision Avoidance

The Side Collision Avoidance is part of the Active Lane Keeping Assistant with Side Collision Avoidance. The Active Lane Keeping Assistant with Side Collision Avoidance is part of the scope of supply of the Active Driving Assistant Plus, optional equipment (OE 5AT). The Side Collision Avoidance is not available separately.

The Side Collision Avoidance assists the driver in avoiding a potential side collision.

Four radar sensors monitor the area next to the vehicle and function regardless of the lighting conditions and largely irrespective of the weather conditions.

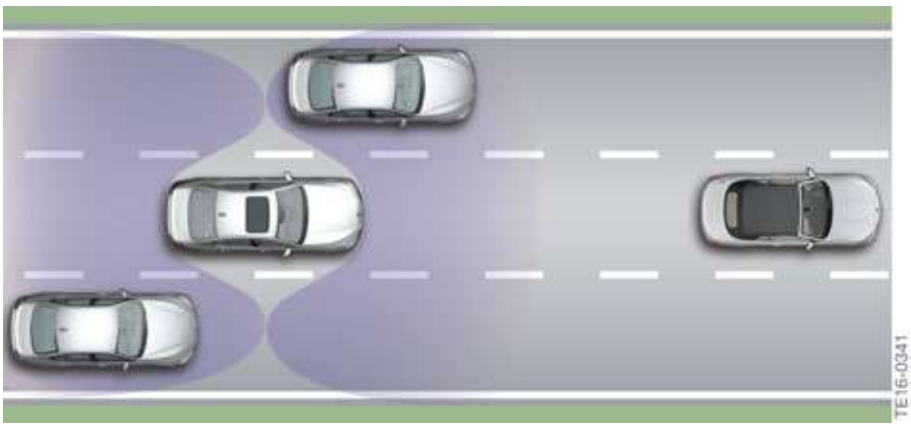

G30 Vehicle detection using radar sensors (Side Collision Avoidance)

If there is a risk of a collision, the corresponding indicator flashes (depending on which side the risk relates to, left or right) in the exterior mirror with high intensity and the steering wheel starts to vibrate.

G30 Signal unit (LED) in mirror glass

cardiagn.com

An active steering intervention is then initiated, which assists the driver in moving his vehicle back to a safe area within his own lane.

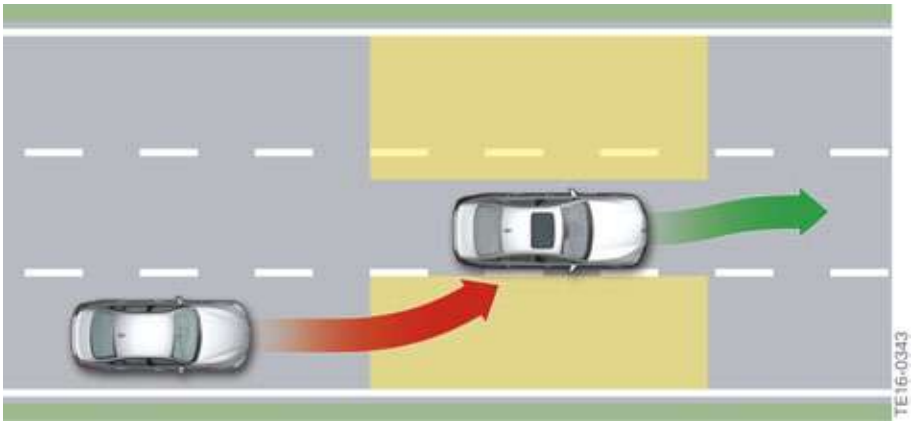

G30 Side Collision Avoidance with active steering intervention in the event of a potential side collision

The steering intervention is initiated within a speed range of between 43 and 130 mph (70 km/h and 210 km/h).

The active steering intervention can be felt on the steering wheel, but can be manually overridden by the driver at any time.

Radar sensors

The rear radar sensors are Blind Spot Detection (SWW) sensors.

G30 Blind Spot Detection (SWW) (radar sensors)

cardiagn.com

G30 Driver Assistance Systems

10. Side Collision Avoidance

Two additional radar sensors are used for the front Side Collision Avoidance.

G30 Side Collision Avoidance (radar sensors)

Functional prerequisites

A prerequisite for the activation of the Side Collision Avoidance with steering intervention is that the lane markings must be detected by the KAFAS stereo camera.

If the lane markings are not detected or if the driver is driving within the speed range of 18 to 43 mph (30 to 70 km/h), only the reduced Side Collision Avoidance is active. The warning functions in the form of the flashing indicator in the exterior mirror and the vibration of the steering wheel continue to be implemented.

With the reduced Side Collision Avoidance there is no active lateral guidance of the vehicle. In this case the driver is only warned by a single steering wheel pulse on the opposite side of the wheel to the danger.

The Side Collision Avoidance can be switched on and off via the iDrive menu by making the following selection via the controller:

- "My Vehicle"
- "Vehicle settings"
- "Intelligent Safety"
- "Side Collision Avoidance"

The configuration menu can be accessed quickly by pressing the Intelligent Safety button.

cardiagn.com

G30 Driver Assistance Systems

10. Side Collision Avoidance

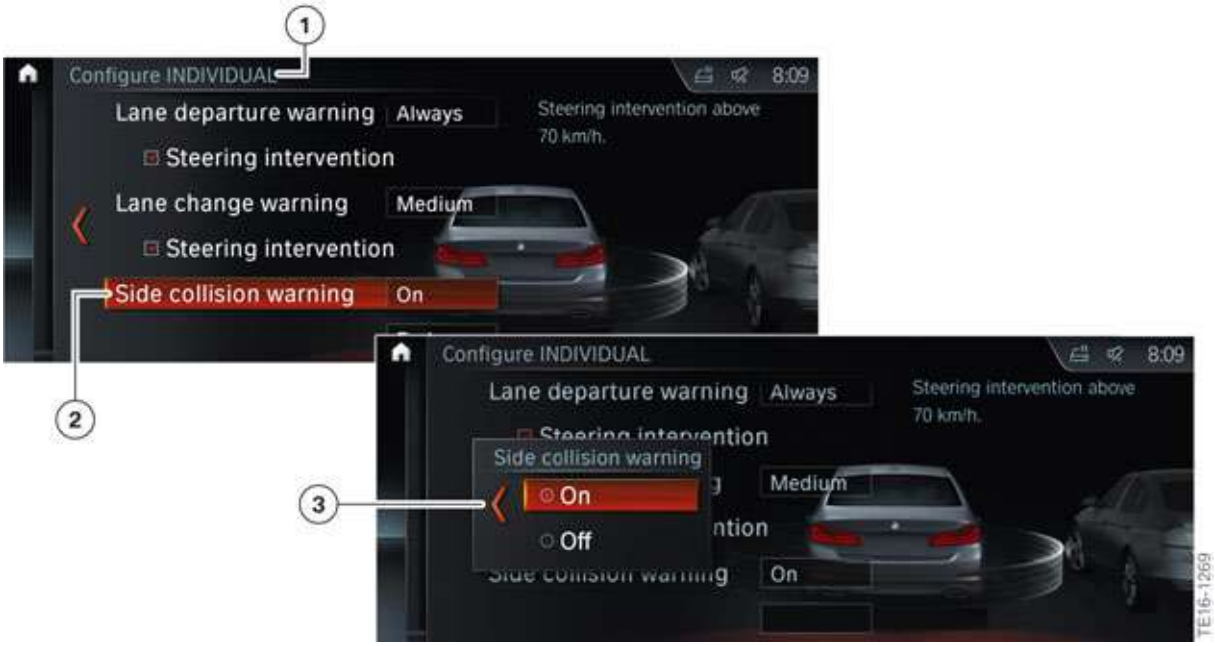

G30 Intelligent Safety view on the CID (Side Collision Avoidance)

Index	Explanation
1	"Configure INDIVIDUAL" menu
2	"Side Collision Avoidance"
3	"Side Collision Avoidance" (switching the side collision warning with steering intervention on and off)

It is not possible to switch off the steering intervention for the Side Collision Avoidance separately.

The Side Collision Avoidance automatically activates itself again after the vehicle moves off if the function was switched on at the time of the last engine shutdown.

10.1. Limits of the system

The function of the system may not be available or may only be available to a limited extent in the following situations.

- Heavy fog, rain or snow.
- At sharp bends or on narrow roadways.
- If the bumper is dirty, iced up or stickers are placed over it.
- If driving at close proximity to a vehicle driving ahead.
- If the speed of the approaching vehicle is much higher than the driver's speed.

cardiagn.com

G30 Driver Assistance Systems

11. Intersection Warning

Intersections are some of the most likely points for accidents in urban traffic. Statistics tell us that approximately one accident in three, with injury to persons, occurs at an intersection. Accidents here can largely be attributed to distraction or poor estimation by the drivers.

The Intersection Warning is installed for the first time in the G30 and can make a major contribution to safety.

The driver is warned both visually and audibly in the event of a risk of a collision with crossing traffic. This can significantly reduce the likelihood of an accident or even the severity of an accident at intersections.

Intersection Warning is an integral part of the Active Driving Assistant Plus, optional equipment (OE 5AT).

11.1. Functional principle

Intersection Warning is able to detect an impending collision with crossing traffic in good time and so such collisions can possibly be prevented by this.

The KAFAS stereo camera and the front radar sensor (ACC radar sensor) monitor the traffic conditions. The information obtained from these sources forms the basis for the system. The sensors detect the distance from other traffic and its speed and direction of movement. The speed of the car is also determined.

G30 Intersection Warning

cardiagn.com

11.1.1. Warning

A warning is issued if a risk of a collision (approximately 1 second before the collision) with crossing traffic is detected and its avoidance by the driver or the crossing traffic is only now possible through an uncomfortable maneuver.

The warning is, however, only issued if the crossing traffic is travelling more slowly than the vehicle.

So if the crossing vehicle is travelling faster than the car, **no** warning would be issued, as the crossing vehicle would be outside the detection range of the sensor system until shortly before the collision.

Warning range

The graphic below shows the danger area which is decisive for the Intersection Warning:

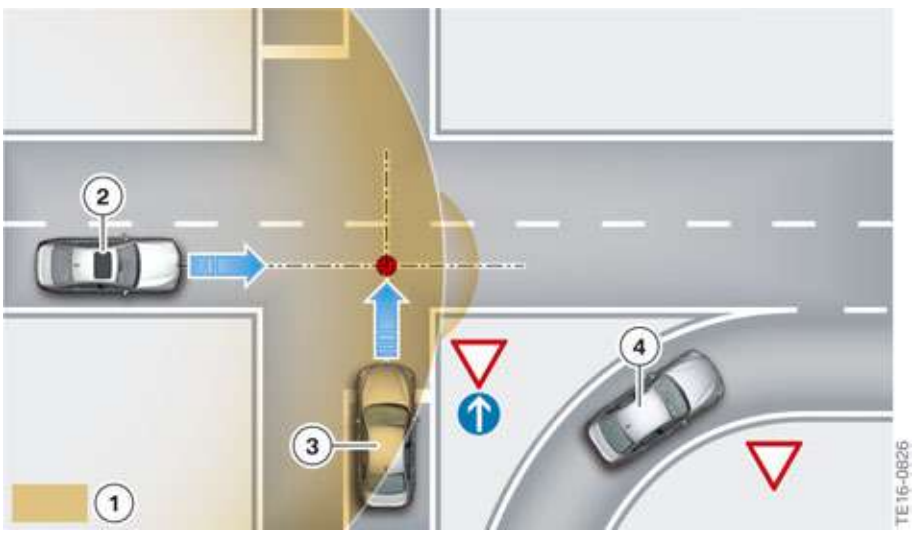

G30 Intersection Warning: Danger area

Index	Explanation
1	Danger area
2	Own vehicle
3	Vehicle located in the danger area
4	Vehicle outside the danger area

If the detection system identifies a hazardous situation, it prompts the driver into emergency braking by a visual and an audible warning.

At the same time, the brake system is prefilled. However, there is no automatically triggered brake intervention by the system. It is rather that the driver is prompted to act quickly and to apply the brakes himself. There may be automatic brake-servo assistance during the emergency braking, as necessary. The brake pressure is regulated as needed for effective panic braking.

cardiagn.com

G30 Driver Assistance Systems

11. Intersection Warning

Displays

The visual warning is given by the following warning symbols:

Symbol	Explanation
	Intersection Warning symbol (warning of vehicle approaching from the left)
	Intersection Warning symbol (warning of vehicle approaching from the right)

The visual warning appears in the KOMBI instrument cluster or Head-Up Display if the vehicle is fitted with the Head-Up Display (OE 610).

G30 Intersection Warning: Warning symbol

The Intersection Warning is active in the speed range from approximately 9 mph (15 km/h) to approximately 40 mph (65 km/h).

The Intersection Warning is also switched off by selecting ALL OFF. There is no separate deactivation or configuration option in the iDrive menu for the Intersection Warning.

The Intersection Warning system does not relieve the driver of personal responsibility for correctly judging the visibility and traffic situation. The driver's driving style should be adapted to the traffic conditions. The driver should check the traffic conditions, and react accordingly if required.

cardiagn.com

11.2. Limits of the system

The function of the Intersection Warning may be restricted because of system limits or unfavorable conditions in the following situations, for example:

- If there are other objects in the field of view of the sensors that are concealing the cross traffic.
- Heavy fog, rain or snow.
- If the front bumper is dirty or iced up.
- If stickers have been attached near the radar sensors on the bumper.
- If the speed of the approaching vehicle is very high.
- If crossing objects are moving very slowly.
- If it is almost impossible to detect the crossing traffic because of the way the road runs or topographical conditions, for example in tight bends, building complexes in the way etc.

⚠

The system does not replace the personal assessment of the road and the traffic situation.
The Intersection Warning is only intended to assist the driver. There can be functional limitations because of system restrictions or unfavorable topographical conditions.

cardiagn.com

G30 Driver Assistance Systems

12. Road Sign Recognition

The Speed Limit Information function is known from the G12. Current top speed limitations are detected by the Road Sign Recognition system and displayed in the instrument cluster or the Head-Up Display in the form of speed limit symbols.

Top speed limitation symbol shown in the instrument cluster

Index	Explanation
1	Road Sign Recognition (example: a detected top speed limitation is displayed)

Road Sign Recognition (Speed Limit Information) is part of the Active Driving Assistant, optional equipment (OE 5AS), in the G30.

The system does not relieve the driver of personal responsibility for correctly judging the visibility and traffic situation. The driver is solely responsible for the vehicle and the speed at which it is driven.

12.1. Operation

The road sign detection can be switched on and off via the iDrive menu by making the following selection via the controller:

- "My Vehicle"
- "iDrive settings"
- "Displays"
- "Instrument panel"
- Apply desired settings

cardiagn.com

12.2. Limits of the system

Road signs for top speed limitations that do not comply with the legal standard, particularly those without circular frames, are not always detected. The same also applies for road signs which are fully or partially covered by labels, dirt or vegetation. Long distances to the road sign, high driving speeds and poor weather conditions, particularly at night, make it more difficult for the system to recognize road signs reliably. To ensure the current top speed limitations are displayed as accurately as possible, the data of the navigation road map should be up-to-date.

The functionality of the Road Sign Recognition may be impaired in the following situations and this may lead to incorrect information being displayed:

- Heavy fog, rain or snow.
- If signs are covered by objects.
- If driving at close proximity to a vehicle driving ahead.
- Strong light in the camera lens.
- If the windscreen in front of the interior mirror is misted over, soiled or covered by stickers, etc.
- As a result of incorrect detection by the camera.
- If the top speed limitations stored in the navigation system are incorrect.
- In areas not covered by the navigation system.
- In the event of deviations from the navigation, e.g. due to modified road layouts.
- When overtaking buses or trucks with speed limit stickers.
- If road signs do not correspond to the standard.
- When calibrating the camera immediately after vehicle delivery.

⚠

The system does not replace the personal assessment of the traffic situation. Due to system restrictions and functional limitations, it may transpire that warnings and alerts are not issued, are issued too late or are unwarranted. The Road Sign Recognition supports the driver and does not replace the human eye.

cardiagn.com

G30 Driver Assistance Systems

13. Proactive Driving Assistant

The Proactive Driving Assistant indicates to the driver the ideal time to lift off the accelerator pedal for a reduction in consumption.

Relevant sections of road are:

- Intersections
- Bends
- Crossroads
- Roundabouts
- Entrances to towns
- Top speed limitations
- Highway exits

Operation of the Proactive Driving Assistant in the G30 requires the Active Driving Assistant Plus, optional equipment (OE 5AT).

G30 Proactive Driving Assistant displays in the instrument cluster

An indicator in the instrument cluster or Head-Up Display (only with optional equipment OE 610) alerts the driver that he is on a section of road relevant for the Proactive Driving Assistant and gives him the option to react accordingly.

cardiagn.com

G30 Driver Assistance Systems

13. Proactive Driving Assistant

13.1. Operation

To use the proactive driving assistant, ECO PRO mode or ECO PRO+ mode must be activated via the driving experience switch.

G30 Switch block with driving experience switch

The proactive driving assistant can be switched on and off in the ECO PRO configuration menu.

The reliability of the system depends on having the most current and accurate navigation data.

13.2. Limits of the system

The proactive driving assistant **is not** available in the following situations:

- Speeds below 31 mph (50 km/h)
- Temporary and variable top speed limitation, such as on building sites
- Quality of navigation data insufficient
- Cruise control active

Additional information may be found in the “G12 Driver Assistance Systems” reference manual (section 12).

cardiagn.com

G30 Driver Assistance Systems

14. Fatigue and Focus Alert

The Fatigue and Focus Alert helps to avoid accidents caused by tiredness on long, monotonous journeys. It is part of the Active Protection equipment (OE 5AL) included in the basic equipment.

A change in the driver's driving behavior is perceived by the Fatigue and Focus Alert. In the event of increasing inattentiveness or if the driver is tired, the Fatigue and Focus Alert shows a display recommending that the driver take a break as a Check Control message in the Central Information Display (CID).

The Fatigue and Focus Alert is automatically active after each engine start from a speed of roughly 43 mph (70 km/h).

14.1. Operation

The Fatigue and Focus Alert can be switched on and off via the iDrive menu. The driver can also set the level of sensitivity in this menu by making the following selection via the controller:

- "My Vehicle"
- "Vehicle settings"
- "Fatigue and Focus Alert"
- Select desired settings

G30 Fatigue and Focus Alert display on the CID

Index	Explanation
1	"Fatigue and Focus Alert" menu
2	Additional note for the driver
3	"Sensitive"
4	Standard
5	Off

cardiagn.com

The settings for the Fatigue and Focus Alert has the following differences:

Selected setting	Explanation
Sensitive	The break recommendation is issued earlier (significantly more sensitive or, in other words, earlier output compared to the "Standard" setting).
Standard	The break recommendation is issued with a defined value (in the same way as for BMW models up to now).
Off	A break recommendation is not issued.

14.2. Limits of the system

The functionality may be impaired in the following situations and no warning or an incorrect warning may be issued:

- If the clock is set incorrectly.
- If the speed is predominantly below approximately 43 mph (70 km/h).
- If the driver adopts a sporty driving style, for example rapid acceleration or fast cornering.
- In active driving situations, for example frequent lane changes.
- Poor road condition.
- Strong crosswind.

⚠

The system does not relieve the driver of personal responsibility for correctly judging his physical condition. Increasing inattentiveness or fatigue may not be detected at all or in time.

cardiagn.com

G30 Driver Assistance Systems

15. Night Vision

In the G30, the Night Vision system is available in the form of BMW Night Vision with person and animal detection, optional equipment (OE 6UK).

Night Vision detects people and animals in optimum conditions at night up to a distance of approximately 330 ft (100 m) away and therefore assists the driver, especially on dark and difficult stretches of road, such as when driving on single-lane roads with adjacent woods.

In potentially dangerous situations, the system warns the driver of people and animals on the road.

The Night Vision camera integrated in the BMW radiator grille records the area in front of the vehicle and sends the data to the Night Vision Electronics (NVE).

G30 Night Vision camera

The image data is analyzed by the Night Vision Electronics control unit and the corresponding image information is sent to the head unit via the Color Video Blanking Signal.

G30 Night Vision Electronics (NVE) control unit

cardiagn.com

G30 Driver Assistance Systems

15. Night Vision

Hot objects with outlines that resemble people or animals are detected by the system and can be displayed on the Central Information Display if necessary.

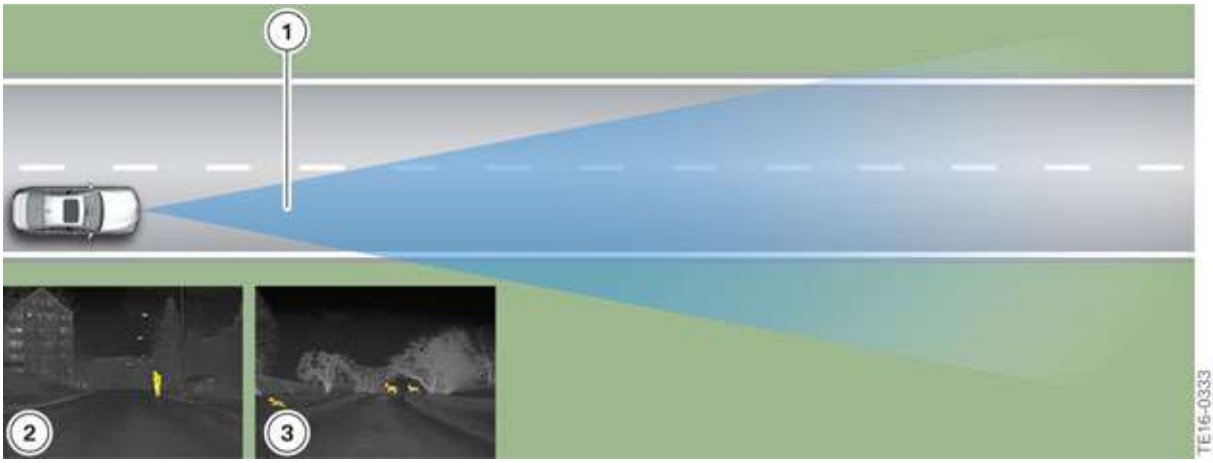

G30 Night Vision detection range

Index	Explanation
1	Night Vision camera detection range
2	Night Vision camera image showing detected person (display on the Central Information Display)
3	Night Vision camera image showing detected animals (display on the Central Information Display)

Object detection range

- Person recognition: up to approximately 330 ft (100 m)
- Recognition of large animals: up to approximately 500 ft (150 m)
- Recognition of medium-sized animals: up to approximately 230 ft (70 m)

Warning levels

Night Vision detects people and determines their position and distance from the vehicle. Taking into account the driving speed and steering angle, the system calculates whether there is a potential risk and displays a warning sign (early warning) in the instrument cluster and in the Head-Up Display, if present.

In critical situations a warning signal also sounds (acute warning). The warning threshold values are also dependent on whether the person or the animal is moving or standing still.

cardiagn.com

G30 Driver Assistance Systems

15. Night Vision

The table below shows an overview of the symbols with their meanings:

Symbols	Explanation
	Early warning (person on the roadway)
	Early warning (person crossing the roadway)
	Acute warning when a person is detected
	Early warning when an animal is detected
	Acute warning when an animal is detected

cardiagn.com

G30 Driver Assistance Systems

15. Night Vision

15.1. Operation

Night Vision is automatically switched on every time the vehicle drives off when it is dark. The warning functions are therefore issued irrespective of the view on the Central Information Display. The driver can switch the Night Vision camera display on the Central Information Display on and off by pressing the Night Vision button in the light operating unit.

It is also possible to set the brightness and contrast of the Night Vision display via the iDrive.

G30 Button for thermal imaging camera/Night Vision

Index	Explanation
1	Night Vision button

cardiagn.com

15.2. Limits of the system

The functionality may be impaired in the following situations and no warning or an incorrect warning may be issued:

- On steep summits or dips and tight bends.
- If the camera is dirty or the protective screen is damaged.
- Heavy fog, rain or snow.
- If the outside temperatures are very high.

The person and animal recognition may also be impaired or may not issue the usual warnings. This can occur in the following cases:

- If the person or animal is fully or partially hidden, particularly the head.
- If the person is not in an upright position, e.g. if they are lying down.
- If a bike has non-conventional wheels, e.g. recumbent bicycle.
- If the system has been affected mechanically, e.g. after an accident.

In certain cases small animals may be entirely visible on the Central Information Display, but may not be identified by the object detection. As a consequence, a warning is also not issued.

⚠

The system does not relieve the driver of personal responsibility for correctly judging the visibility and traffic situation. The driver is solely responsible for the vehicle and the speed at which it is driven.

cardiagn.com

G30 Driver Assistance Systems

16. Cameras

The camera systems provide support for parking, maneuvering and for complex exits and intersections.

The range of camera systems offered has changed completely with the G30. With the exception of the rear view camera, the systems are no longer available as individual items of optional equipment.

The new range strategy now looks like this:

- The rear view camera is available separately as the rear view camera, optional equipment (OE 3AG).
- Surround View is offered in conjunction with the Parking Assistant Plus, optional equipment (OE 5DN). The Surround View function with Top View, Panorama View and 3D View provides 360° visibility around the vehicle.
- The Remote 3D view (Remote 360°) is presented for the first time in conjunction with the Parking Assistant Plus, optional equipment (OE 5DN). This function allows the customer to display images of his parked vehicle on a mobile device (such as a smartphone).

16.1. Surround View

Surround View shows the vehicle surroundings and displays them in TOP View and 3D View on the Central Information Display.

The system comprises the front camera, the two cameras integrated in the exterior mirrors, the rear view camera (RFK) and the Top Rear Side View Camera (TRSVC) control unit. The TRSVC may be referred to as ICAM2 in technical systems.

The images from the four cameras are combined into a panoramic view around the vehicle from different angles using 3D computer graphics.

The driver can choose from preset views or can freely select the view (for example, car wash entrances).

In addition, assistance functions such as guidance lines can be shown on the Central Information Display.

The following camera angles can be displayed:

- Automatic camera angle
- Side view
- Front camera
- Panorama view
- Rear view camera
- Moving camera angle

cardiagn.com

16. Cameras

16.1.1. Automatic camera angle

The system automatically shows the most appropriate camera angle depending on the driving situation, thus providing the driver with optimum assistance when parking and maneuvering. The automatic camera angle shows a steering-dependent view and takes into account the respective direction of travel and the distance information from the Park Distance Control (PDC).

As soon as obstacles are detected, the view changes to a fixed display of the area in front of or behind the vehicle, or changes to the corresponding side view if required.

16.1.2. Side view

This view helps the driver to position the vehicle next to the curb or other obstacles at the side of the vehicle by displaying the side surroundings. The side view is from the rear to the front and automatically focuses on potential obstacles if there is a collision risk.

Both the left and right sides of the vehicle are recorded.

16.1.3. Front camera

The front camera supports the driver when parking and maneuvering. The area in front of the vehicle is recorded by the front camera and shown on the Central Information Display. The front camera view cannot be selected separately. The driver must select the "Auto" camera angle to view it or if desired, switch on the "Panorama View" function.

16.1.4. Panorama View

Panorama View enables the driver to see the cross traffic at blind exits and intersections before proceeding and provides the driver with optimum assistance in this situation. Road users that are hidden by obstacles to the side of the vehicle are sometimes only seen by the driver very late or not at all. To improve the view, the front and rear view cameras record the lateral roadway area. Depending on which drive position is engaged, the front or rear view camera can be activated.

cardiagn.com

G30 Panorama View on the CID

Yellow lines in the screen display mark the front and rear ends of the vehicle. The camera image is badly distorted in some areas and is therefore not suitable for estimating distances.

The function can be activated using the Panorama View button. Press the button again to deactivate the function. The Panorama View function is automatically deactivated at speeds above approximately 9 mph (15 km/h).

Panorama View (GPS-based)

GPS-supported, automatic activation of the Panorama View function has been implemented in the G30.

G30 Automatic switch on at a set activation point

Positions at which the Panorama View should switch itself on automatically can be saved as activation points provided that a GPS signal is received. A maximum of ten activation points can be saved for the front camera.

cardiagn.com

To save the activation points, the driver must proceed as follows:

- Stop after reaching the place where the Panorama View should switch itself on automatically.
- Press the Panorama View button and then tilt the controller to the left.
- Then select "Add activation point" (the current position is displayed) and confirm by selecting "Add activation point."

G30 Setting activation points

Index	Explanation
1	"Add activation point"

If possible, the activation points are saved with the town/city and street or with the GPS coordinates. The direction of travel is also saved in conjunction with the activation point.

The driver can display the saved activation points on the Central Information Display.

cardiagn.com

G30 Displaying activation points

Index	Explanation
1	"Show activation points"

The use of activation points can be switched on and off via iDrive.

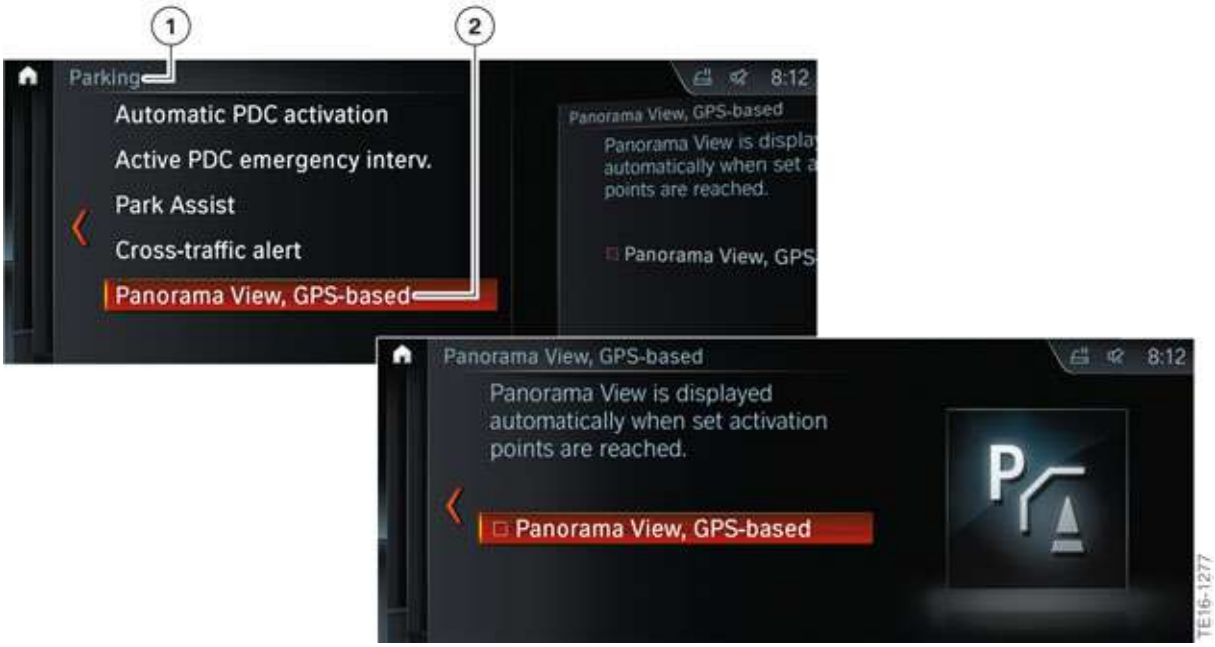

G30 Panorama View activation menu on the CID

Index	Explanation
1	"Parking" menu
2	"Panorama View, GPS-based"

cardiagn.com

16.1.5. Rear view camera

The rear view camera supports the driver when parking and maneuvering. The area behind the vehicle is recorded by the rear view camera and shown on the Central Information Display.

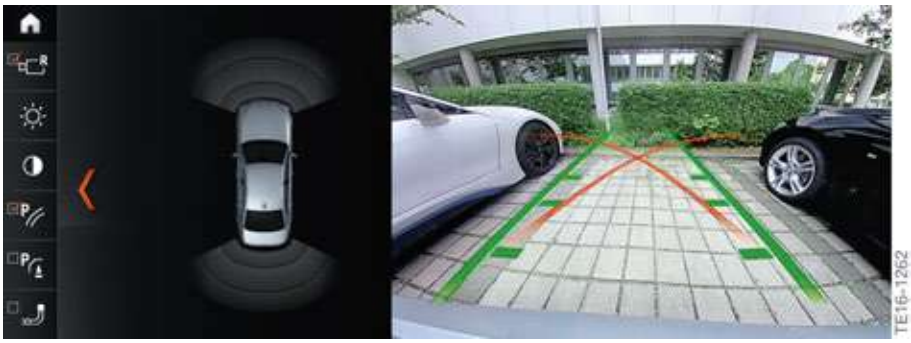

G30 Rear view camera image in the CID

16.1.6. Moving camera angle

When the moving camera angle is selected, a circular trajectory is shown around the vehicle on the Central Information Display. Predetermined angles can be selected on the circular trajectory by turning the controller or using the touch function.

In vehicles with the Gesture Control, optional equipment (OE 6U8), the moving camera angle can also be controlled in this way.

The current angle is identified by a camera symbol. Depending on the view, the surroundings of the vehicle or a partial area of the surroundings are shown on the Central Information Display.

cardiagn.com

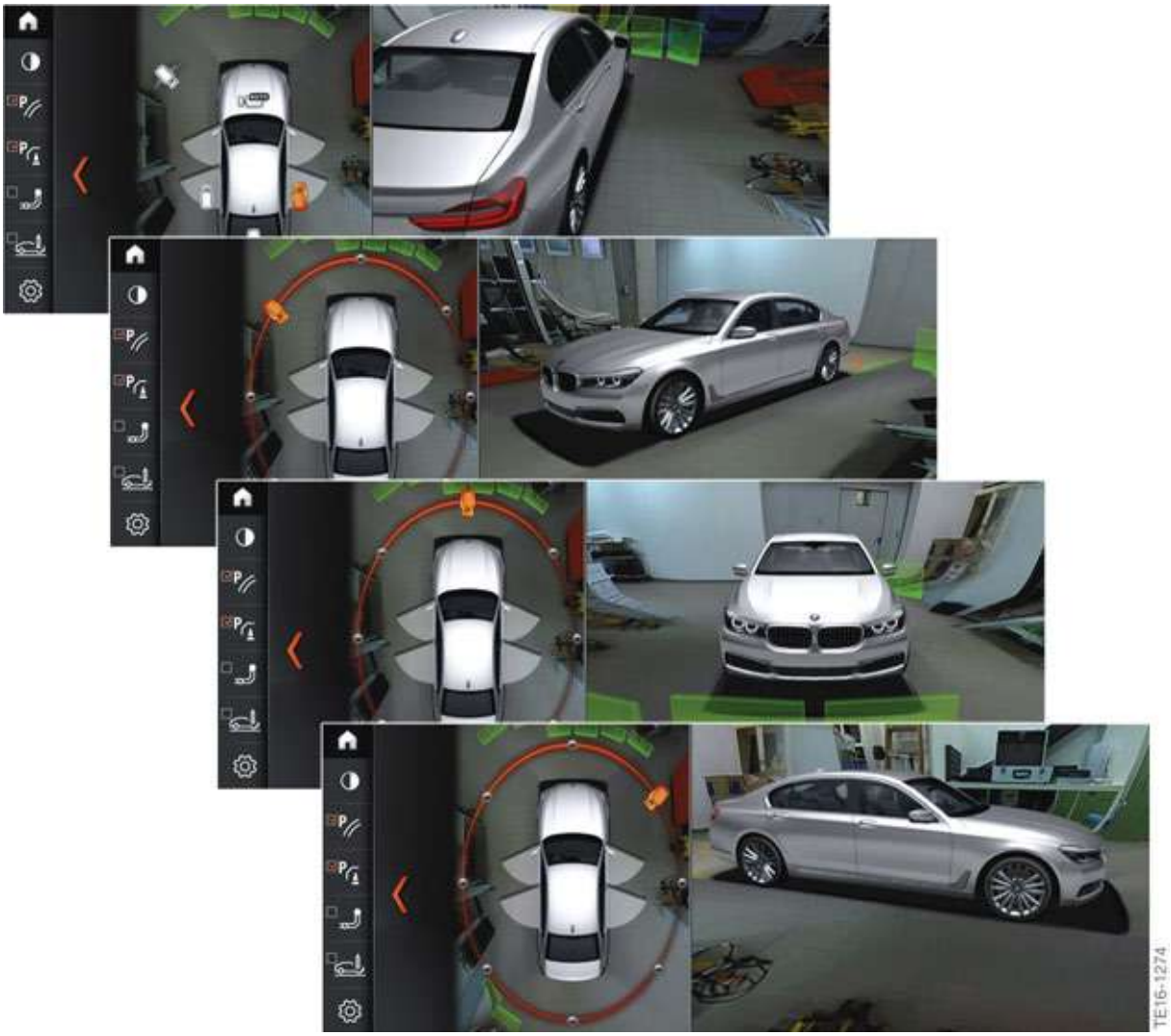

G30 Exterior camera view (moving camera angle) on the CID

To leave this view, tilt the controller to the side, press it or touch the highlighted camera symbol via the touch screen.

If Gesture Control is being used, the gesture symbol is shown on the right half of the Central Information Display screen.

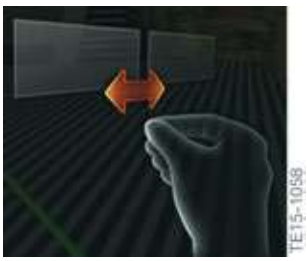

Rotating the camera view using Gesture Control

cardiagn.com

16.2. Overview of exterior camera operating menu

Once the camera systems have been activated successfully, the driver has the option of selecting the appropriate view or camera via iDrive.

G30 Switch block with Panorama View button

Index	Explanation
1	Parking assistance button
2	Panorama View button

The camera systems can be activated (depending on the vehicle equipment) as follows:

- Manually by pressing the parking assistance button or the camera button (Panorama View).
- By engaging drive position "R".
- By engaging reverse gear (on vehicles with a manual gearbox).
- Automatically via the "Auto PDC" function.
- Automatically via the GPS-supported automatic activation of the Panorama View function, provided that activation points have been saved.

cardiagn.com

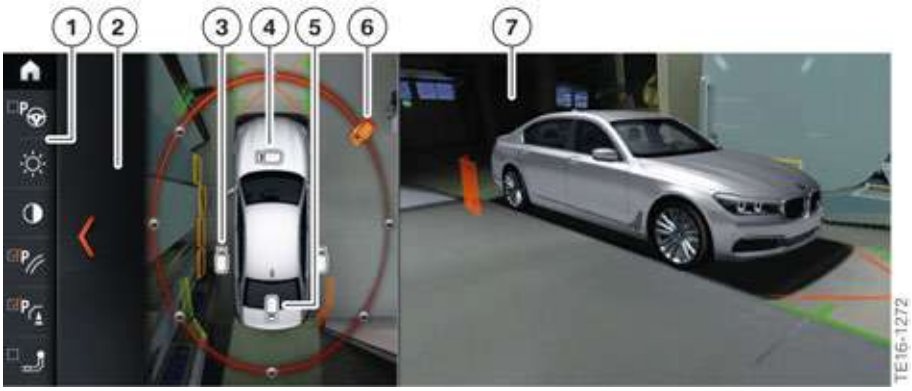

G30 Exterior cameras view (camera angles) on the CID

Index	Explanation
1	Toolbar
2	Selection window
3	Side view
4	Automatic camera angle
5	Rear view camera
6	Moving camera angle
7	Camera image

Other settings and options can be found in the toolbar, depending on the vehicle equipment. Thus, for example, the driver can switch the parking assistance lines, the obstacle marking etc. on and off, or also make adjustments to the image brightness and contrast. The driver can also activate or deactivate the assistance functions here such as the car wash view, for instance.

16.3. Assistant function

The following assistance functions are available:

- Car wash view
- Side protection
- Door opening angle

cardiagn.com

16.3.1. Car wash view

The car wash view assists the driver when entering a car wash. When the car wash view is selected, immediately before entering the car wash, a bird's eye view is displayed on the Central Information Display. To enable the driver to align the vehicle more easily, the vehicle's tire tracks are shown on the display.

The car wash view can be activated via the iDrive in the toolbar under the "Car wash" menu item.

G30 PDC car wash view on the CID

Index	Explanation
1	"Car wash"

cardiagn.com

16.3.2. Side protection

The side protection warns against obstacles at the side of the vehicle and thus supports the driver when parking and maneuvering.

To protect the sides of the vehicle from collisions with obstacles, additional obstacle markings are shown to the side of the vehicle on the Central Information Display, if necessary.

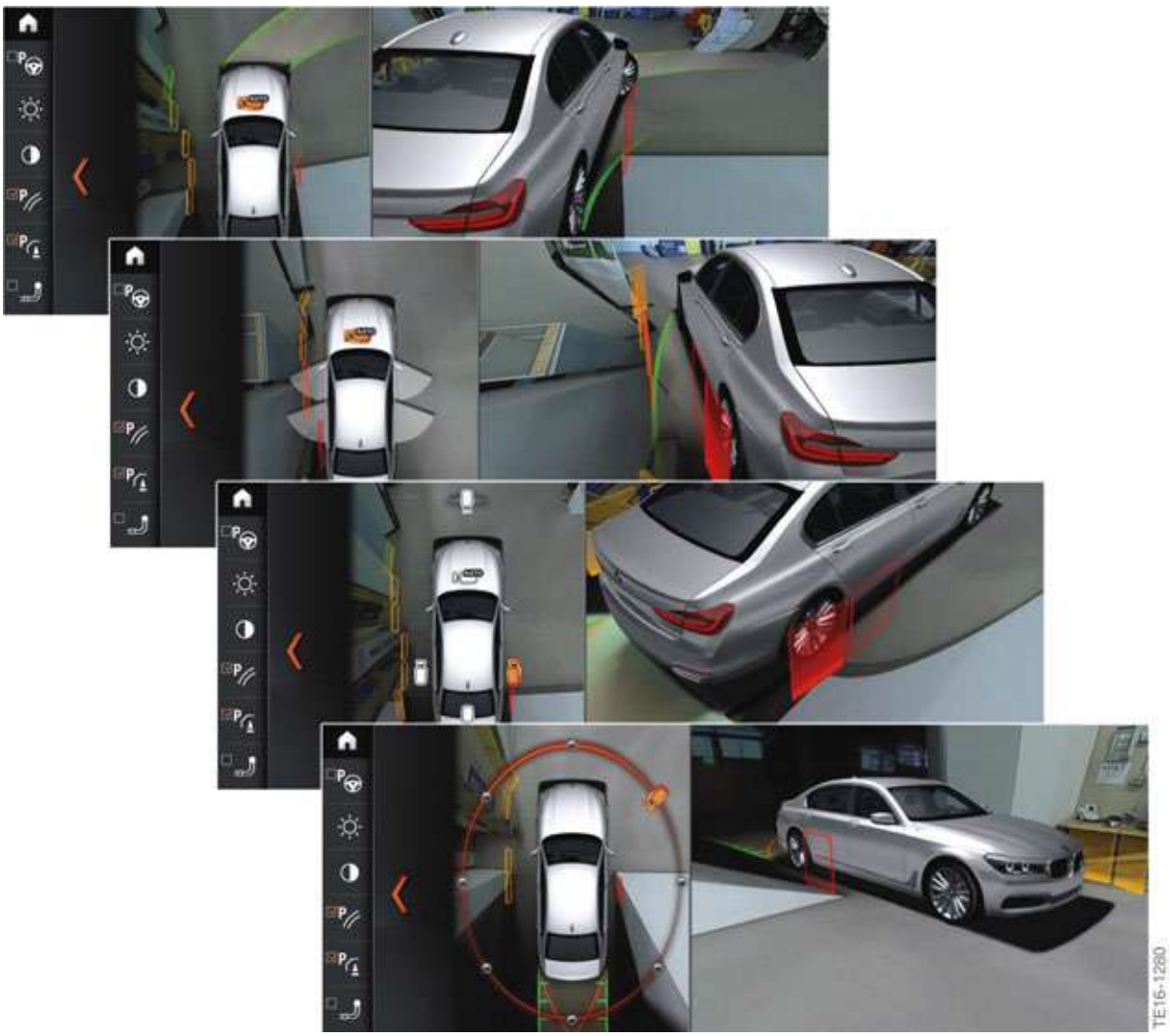

G30 Side protection view (additional obstacle markings)

More information on the operation of the side protection function can be found in section 17.4.

cardiagn.com

16.3.3. Door opening angle

When the vehicle is stopped and the selector lever position "P" is engaged, the maximum opening angle of the doors is displayed on the Central Information Display.

If there is an obstacle near the door and it is detected by the side protection, this is marked on the Central Information Display. The obstacle marking display only points out objects in the area of the door. It is not possible for a view from the camera systems to be displayed, as the door area is simulated. Therefore, the driver is only informed that there is an object at the side of the vehicle; it is not certain that the door will definitely collide with the identified object. The driver must judge this for himself.

G30 Door opening angle view on the CID

The "Parking assistance lines" and "Obstacle marking" features already used in other BMW models can also be activated and deactivated via the iDrive in the toolbar under the relevant menu items.

The camera systems do not relieve the driver of personal responsibility for correctly judging the traffic situation. There is still a risk of an accident. The driver's driving style should be adapted to the traffic conditions. The driver should check the traffic conditions and the vehicle's surroundings by looking around and react accordingly if required.

16.4. Remote 3D View

The Remote 3D View (Remote 360°) is provided for the first time on the G30. This function allows the customer to display images of his parked vehicle on a mobile device (such as a smartphone).

The user can send a remote request to the parked vehicle through his device. The vehicle takes images of its surroundings and sends these to the device where an app generates a 3D view. The view can be adjusted by gesture, as in the vehicle.

The customer thus has the capability of viewing his vehicle's surroundings at any time.

Examples:

- What does it look like around my vehicle?
- Who or what is near my vehicle?

Remote 3D View is part of the Parking Assistant Plus optional equipment (OE 5DN).

cardiagn.com

16.4.1. Functional principle

Surround View is a prerequisite for Remote 3D View (Remote 360°) as it includes the Top View 3D function. This means that the already familiar cameras are used.

The function is sold via the Remote Services standard equipment (6AP).

The Remote Services, standard equipment (OE 6AP), contains a number of functions that are active for the lifetime of the vehicle. Remote 3D View is, however, an exception. The function is active for 2 years following activation. The service expires after 2 years. In this event, the customer is notified by text and email 2 weeks before expiry of the Remote 3D View service.

When the service has expired, the customer has the option of activating or purchasing the function for a further two years through the ConnectedDrive Shop. Availability of the function can be extended as many times as desired via the ConnectedDrive Shop.

Application:

The customer should like to have an image of the area around his parked vehicle.

G30 Remote 3D View

1 He sends a request to the BMW back end via the BMW Connected App (Remote 3D View) on his smartphone.

2 Following verification of the data, the BMW back end passes the request on to the appropriate vehicle. The vehicle then takes four separate Surround View images using the external cameras. These are then sent in the Top Rear Side View Camera control unit to the Telematic Communication Box (TCB) and temporarily buffered.

cardiagn.com

G30 Remote 3D View: Surround view images

3 The images are then sent by the vehicle through the Telematic Communication Box (TCB) to the BMW back end.

4 The BMW back end sends the image data and a matching encryption code to the customer's smartphone. Once the data has been sent to the smartphone, it is deleted from the BMW back end. The image data received is merged to form a 360° all-round view in the smartphone.

G30 Remote 3D View: view in the smartphone

The 3D optical display appears once the smartphone has received all four images.

cardiagn.com

Availability

The system includes a function detecting any border crossing or the country in which the vehicle is located in order to allow a country-specific release and configuration of the Remote 3D View function while at the same time taking account of local laws which might possibly prohibit the use of this function. The function may be automatically deactivated, as appropriate.

The driver also has the possibility of activating or deactivating the function itself via the iDrive (if the function is supported in the country in which the vehicle is located).

The new status is sent to the BMW back end after every change to the setting (to Remote 3D View deactivated, for example). The BMW back end stores the status permanently and releases or inhibits the function calls as appropriate on the basis of this.

16.5. System components

16.5.1. Front camera

The front camera is installed in the center between the two front ornamental grilles on the G30.

G30 Front camera

cardiagn.com

16.5.2. Top view camera

The two are installed in the exterior mirrors on the G30.

G30 Exterior mirror camera, left

Index	Explanation
1	Exterior mirror camera

cardiagn.com

16.5.3. Rear view camera

The rear view camera supports the driver when parking and maneuvering. The area behind the vehicle is shown on the Central Information Display. Guidance lines integrated in the image provide the driver with additional assistance with distances, the turning circle and obstacle markings, if required.

The rear view camera is located in the trunk lid handle strip.

G30 Rear view camera

The camera has been revised and the video signals are now transmitted via Ethernet in the stand-alone variant too. The control unit remains integrated in the rear view camera (RFK), in this version.

System wiring diagram

The system wiring diagram below shows the scope of the rear view camera (RFK) optional equipment (OE 3AG).

cardiagn.com

G30 Driver Assistance Systems

16. Cameras

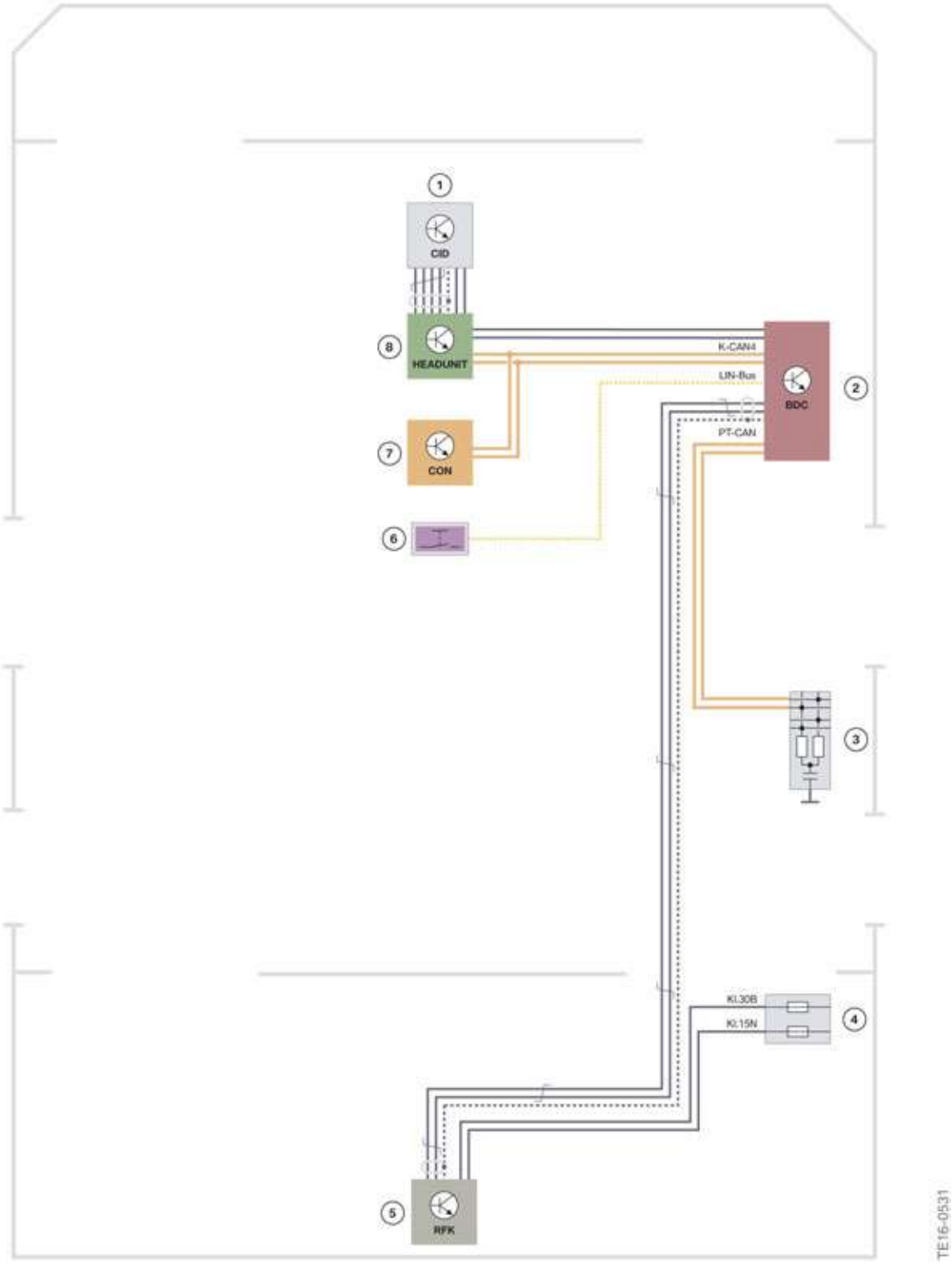

G30 Rear view camera RFK (OE 3AG) system wiring diagram

cardiagn.com

Index	Explanation
1	Central Information Display (CID)
2	Body Domain Controller (BDC)
3	CAN terminator
4	Fuses in the power distribution box, rear right
5	Rear view camera (RFK)
6	Button for camera activation
7	Controller (CON)
8	Head unit

16.5.4. TRSVC control unit

The exterior cameras record the area around the vehicle from various angles and send this information to the TRSVC control unit via Ethernet. The video signals are transmitted from the TRSVC control unit to the head unit via an Ethernet line. The head unit transmits the signals to the Central Information Display via an Automotive Pixel Link line.

The installation location of the TRSVC control unit is in the footwell on the driver's side.

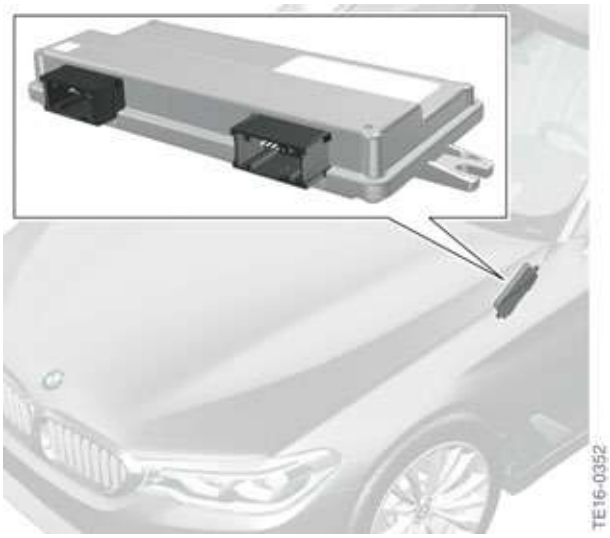

G30 TRSVC control unit

cardiagn.com

G30 Driver Assistance Systems

17. Park Distance Control

The Park Distance Control (PDC), optional equipment (OE 508), assists the driver when maneuvering in and out of a parking space. The current distance from an obstruction is indicated by acoustic signals and on a visual display.

G30 Park Distance Control PDC view in the CID

The distance from an obstruction is measured by four ultrasonic sensors in the rear bumper panel and four additional ultrasonic sensors in the front bumper panel.

17.1. System components

G30 Park Distance Control system components

cardiagn.com

Index	Explanation
1	Ultrasonic sensors for Park Distance Control, front
2	Central Information Display (CID)
3	Operating unit
4	Control unit for Parking Maneuvering Assistant (PMA)
5	Ultrasonic sensors, Park Distance Control, rear
6	Head Unit High

Vehicles that do not have the Parking Maneuvering Assistant but do have the Park Distance Control have a separate control unit, which is recognized as the PMA control unit by diagnosis and is also referred to by this name in the bus diagram. In other words, there is no longer a difference in the naming of the PDC and PMA control unit (there are however differences in the hardware design between the control units and the software is adapted to the equipment specification).

G30 Control unit for Parking Maneuvering Assistant (PMA)

17.2. Auto PDC

On the G30, Auto PDC is activated automatically if the vehicle is approaching an object at a speed below approximately 3 mph (5 km/h) and the object is located in a collision-critical area. The Auto PDC function is available for both the front and rear of the vehicle.

The automatic switch-on function when obstacles are detected can be switched on and off via iDrive.

Further information about Auto PDC may be found in the “G12 Driver Assistance Systems” reference manual (section 16.2).

cardiagn.com

17.3. Active Park Distance Control

In G30 vehicles with the Parking Assistant, optional equipment (OE 5DM), or Parking Assistant Plus, (OE 5DN) optional equipment, the Park Distance Control function has been extended to include the Active Park Distance Control function. This automatically brakes the vehicle to a stop when it is travelling at walking speed (< approximately 4 mph (6 km/h)) if an object is detected behind the vehicle.

The Active Park Distance Control function can be switched on and off via iDrive.

⚠

The system does not relieve the driver of personal responsibility for correctly judging the traffic situation. The driver should check the traffic conditions and the vehicle's surroundings by looking around and react accordingly if required.

Further information about the Active Park Distance Control function may be found in the “G12 Driver Assistance Systems” reference manual (section 16.3).

17.4. Side protection

The side protection warns against obstacles at the side of the vehicle and thus supports the driver when parking and maneuvering.

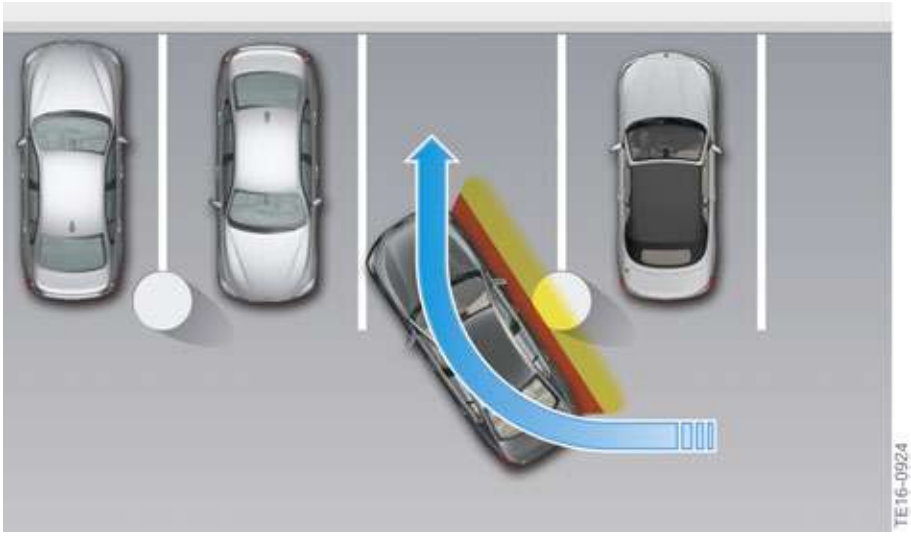

G30 Side protection

Vehicles with the Parking Assistant, optional equipment (OE 5DM), have side protection.

Obstacles detected by the four side ultrasonic sensors integrated in the bumpers can be displayed by the Park Distance Control system.

cardiagn.com

Display in the Central Information Display (CID)	Meaning
Colored markings	Warning of detected obstacles
Grey markings	The area next to the vehicle has not yet been recorded
No markings	No obstacles have been detected

17.4.1. Functional principle

Four side ultrasonic sensors, two integrated in the front bumper and two integrated in the rear bumper, measure the distance to an obstruction. Obstructions detected by the sensors are tracked along the side of the vehicle as it moves. They are shown on the Central Information Display and, in situations where a collision is imminent, an acoustic warning also sounds.

G30 Side protection view on the CID

Obstructions approaching the stationary vehicle are not taken into account, as in this case the system cannot evaluate the situation unequivocally. The prerequisite for identifying obstructions is that the (driver's) vehicle is moving.

The distance markings shown on the Central Information Display are displayed for approximately 13 seconds once the vehicle has stopped. The markings are only shown again once the vehicle starts moving.

cardiagn.com

17.5. Operation

The Park Distance Control system is enabled in the following situations:

- If drive position R reverse gear is engaged when driving readiness is switched on.
- If the parking assistance button in the switch block next to the controller is pressed when driving readiness is switched on.
- Auto PDC is activated and all conditions for automatic activation are met.

G30 switch block with parking assistance button

Index	Explanation
1	Parking assistance button

Further information about the operating concept for Auto PDC, the Active Park Distance Control function and acoustic signal output may be found in the “G12 Driver Assistance Systems” reference manual (section 16.5.1-16.5.3).

17.6. Deactivation criteria

Similar to other BMW models, the deactivation is distance/speed-based. The switch-off is effected after a journey of approximately 164 ft (50 m) or at a speed over 6 mph (10 km/h).

If a fault develops, a Check Control message "PDC has malfunctioned. Have system checked." is displayed in the Central Information Display (CID). In addition, the detection range of the sensors is shown shaded in the Central Information Display (CID).

cardiagn.com

17.7. Limits of the system

Due to the physical limits during the ultrasonic measurement, obstructions may not be detected by the Park Distance Control system. Several examples of this are shown below:

- If the objects are thin or wedge-shaped.
- When the objects are low.
- When objects that, due to their shape, have corners and sharp edges.
- With snow.
- If the objects have a porous surface.

A warning may also be displayed although there is no obstruction in the detection range. This may be the case in the following situations:

- When it is raining heavily.
- If the sensors are heavily soiled or iced over.
- If the sensors are covered with snow.
- If the street surface is rough.
- If there are bumps, e.g. speed bumps.
- In large right-angled buildings with smooth walls, e.g. underground car parks.
- Due to heavy exhaust gas fumes.
- Due to other ultrasound sources.

To ensure the ultrasonic sensors remain fully operational, they must be kept clean and free of ice. When cleaning the sensors using a high pressure cleaner, avoid direct and sustained contact with a high-pressure water jet. Furthermore, when using high pressure cleaners, a distance of at least 1 ft (30 cm) from the sensors must be maintained.

⚠

The Park Distance Control cannot replace the driver's personal judgement of the traffic situation. Also check the traffic situation around the vehicle by looking around, otherwise there may be a risk of an accident as a result of road users or objects which lie outside the detection range of the Park Distance Control. Loud sound sources outside and inside the vehicle could drown out the PDC signal.

cardiagn.com

G30 Driver Assistance Systems

18. Cross Traffic Alert

The Cross Traffic Alert was used for the first time in the G12. This warning assists the driver when maneuvering out of a parking space and in other everyday situations where it is difficult to see the traffic, such as at blind entrances and exits.

Depending on the vehicle equipment, the Cross Traffic Alert is available in the G30 for rear or also for the front.

The system can detect objects that are approaching the vehicle from the side, either from the front or rear (depending on the vehicle equipment). The driver is made aware or, if necessary, warned of cross traffic by the Cross Traffic Alert when maneuvering out of a parking space or entering the cross traffic.

18.1. Functional principle

If a moving object is detected, which based on the current speed would be in the area in front of or behind the vehicle in approximately the next two seconds, a visual and acoustic warning is issued.

When a Cross Traffic Alert Rear is issued, the LED in the mirror glass is also switched on. The Blind Spot Detection signal unit is used as an indicator. The indicator is switched on in either the left or right mirror depending on the direction from which the object is approaching the vehicle.

The Cross Traffic Alert works up to a speed of approximately 4 mph (7 km/h). Another prerequisite of the function is that the side radar sensors are able to detect the road or approaching object. The radar sensors can detect objects up to a maximum of 262 ft (80 m) away from the vehicle.

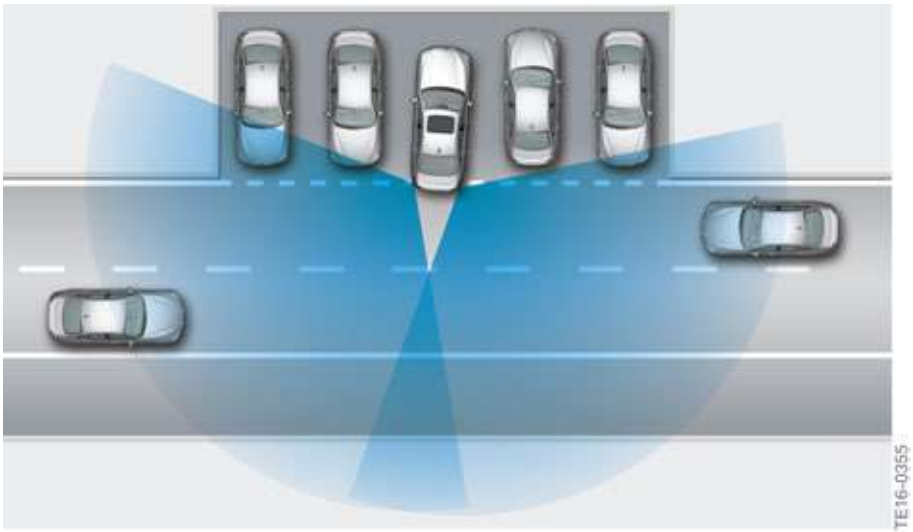

G30 Cross Traffic Alert Rear: maneuvering out of a parking space

cardiagn.com

18.2. Cross Traffic Alert Rear

The Cross Traffic Alert Rear assists the driver when reversing out of a parking space and warns of potential collisions with cross traffic in traffic situations where it is difficult to see obstructions.

The Cross Traffic Alert Rear is included in the Active Driving Assistant, optional equipment (OE 5AS), scope of supply.

The warning is displayed in the Park Distance Control image on the Central Information Display.

In conjunction with the rear view camera, optional equipment (OE 3AG), the Cross Traffic Alert Rear will be extended to include an additional display on the Central Information Display. The warning will be shown in the form of a red bar in the camera's video screen.

The Cross Traffic Alert Rear is enabled if the driver engages the "R" drive position or the Park Distance Control is active.

In vehicles with the Parking Assistant Plus, optional equipment (OE 5DN), the Cross Traffic Alert Rear is also enabled if Panorama View has been activated.

The Cross Traffic Alert Rear is available at speeds up to approximately 4 mph (7 km/h).

18.3. Cross Traffic Alert Front

The Cross Traffic Alert Front assists the driver when entering the cross traffic from exits and blind intersections.

The Cross Traffic Alert Front is included in the Active Driving Assistant Plus, optional equipment (OE 5AT), scope of supply. If the Cross Traffic Alert for the front of the vehicle is installed, the rear version is activated automatically.

The warning is displayed in the Park Distance Control image on the Central Information Display.

The Cross Traffic Alert Front is enabled if the Park Distance Control is active and the speed of the vehicle does not exceed approximately 4 mph (7 km/h).

In vehicles with the Parking Assistant Plus, optional equipment (OE 5DN), the Cross Traffic Alert Front is also enabled if Panorama View has been activated.

Like the Cross Traffic Alert Rear, the Cross Traffic Alert Front function is available at speeds up to approximately 4 mph (7 km/h).

cardiagn.com

18.4. Displays

Various representations in the CID are possible depending on the vehicle equipment.

The respective peripheral region in the PDC view flashes red if vehicles are detected by the sensors.

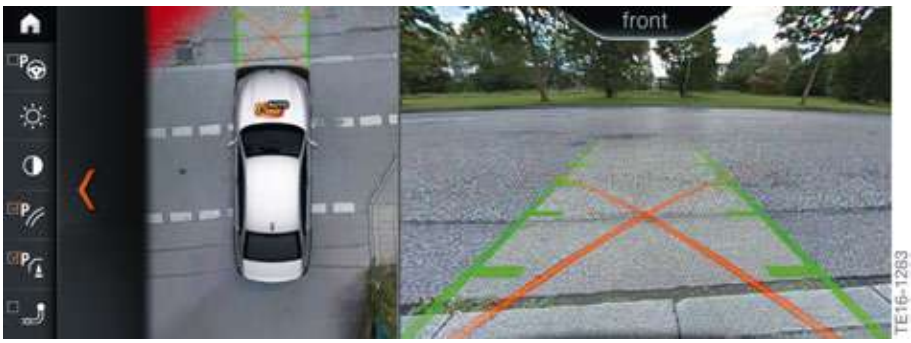

G30 Cross Traffic Alert in the PDC view

In vehicles with the Parking Assistant Plus, optional equipment (OE 5DN), the warning is shown on the Central Information Display in the PDC view image and in the front camera and rear view camera video images in the form of a red bar.

If Panorama View is activated, the Cross Traffic Alert is shown in the form of a red bar on the Central Information Display.

G30 Panorama View (Cross Traffic Alert Front)

cardiagn.com

G30 Driver Assistance Systems

18. Cross Traffic Alert

G30 Panorama View (Cross Traffic Alert Rear)

The Cross Traffic Alert is available to the driver for both the front and rear views.

cardiagn.com

18.5. Operation

Cross Traffic Alert can be switched on and off via the iDrive menu by making the following selection via the controller:

- "My Vehicle"
- "Vehicle settings"
- "Parking"
- "Cross traffic alert"

G30 Cross Traffic Alert activation on the CID

Index	Explanation
1	"Vehicle settings"
2	"Parking"
3	"Cross traffic alert" (switching the Cross Traffic Alert on and off)

If the Cross Traffic Alert has been activated in the iDrive menu, the function is switched on automatically as soon as the Park Distance Control or Panorama View is active.

The Cross Traffic Alert is deactivated automatically in the following situations:

- If the driver's vehicle is travelling at a speed higher than walking speed (threshold value approximately 4 mph (7 km/h)).
- If the Traffic Jam Assistant is active.
- If the driver is currently parking using the Parking Maneuvering Assistant.

cardiagn.com

18.6. Limits of the system

The function may be restricted in the following situations:

- If there are other objects in the field of view of the sensors that are concealing the cross traffic.
- Heavy fog, rain or snow.
- If the bumper is dirty or iced over.
- If stickers have been attached near the radar sensors on the bumper.
- If the speed of the approaching vehicle is very high.
- If crossing objects are moving very slowly.
- On sharp bends.

If a trailer socket is being used, for example to operate a trailer or bicycle carrier, the Cross Traffic Alert is not available for the area behind the vehicle.

cardiagn.com

G30 Driver Assistance Systems

19. Parking Maneuvering Assistant

The Parking Maneuvering Assistant (PMA) supports the driver in many ways. The assistant measures the size of a gap between cars and decides, based on the result, whether the gap is large enough to accommodate the vehicle. It also relieves the driver of the task of maneuvering into the space.

The Parking Maneuvering Assistant (OE 5DP) is no longer available as an individual item of optional equipment.

The Parking Maneuvering Assistant is included in the Parking Assistant, optional equipment (OE 5DM), in the G30.

Parking Assistant (OE 5DM) is available only in conjunction with the automatically dipping exterior mirror, optional equipment (OE 4T8).

19.1. Parallel parking/perpendicular parking

The Parking Maneuvering Assistant function facilitates maneuvering into parking spaces that are parallel (parallel parking) and perpendicular (bay parking) to the roadway.

19.1.1. Curbside parking

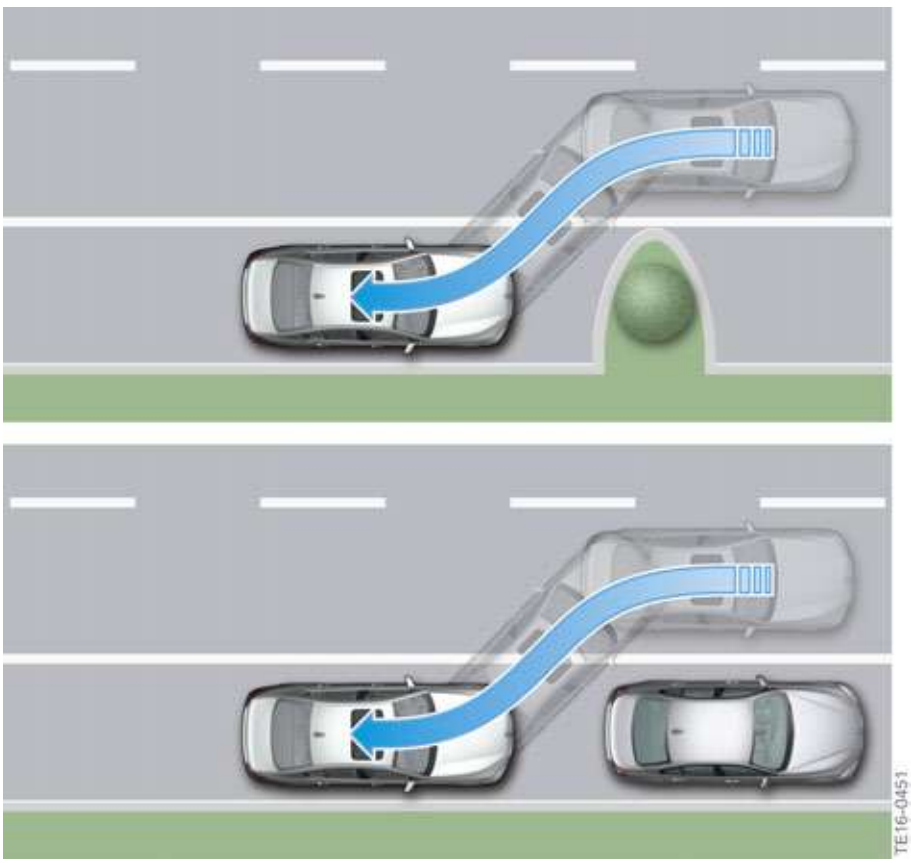

G30 Principle of curbside parking

cardiagn.com

19.1.2. Perpendicular parking

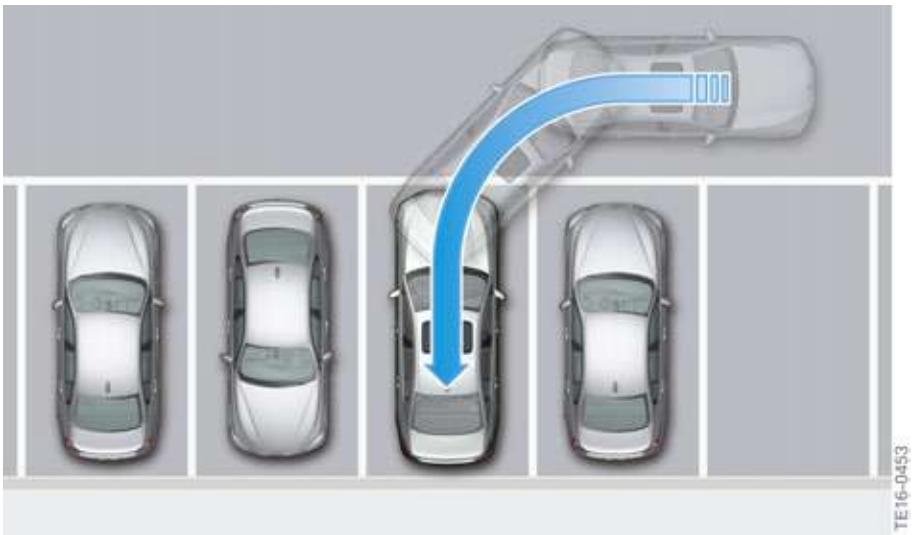

G30 Principle of perpendicular parking

19.2. System components

Below is an overview of important sensors and operating elements:

- The parking assistance button is the central control panel for the Parking Maneuvering Assistant function (position 8).
- Two additional ultrasonic sensors in the front bumper measure parking spaces while driving (position 1).
- The distance from an obstruction is measured by four ultrasonic sensors in the rear bumper panel and four additional ultrasonic sensors in the front bumper panel (positions 11 and 19).
- Two additional ultrasonic sensors are installed in the rear bumper to precisely detect the size of a transverse parking space during the parking maneuver. The additional ultrasonic sensors measure the distance to detected objects.

cardiagn.com

G30 Driver Assistance Systems

19. Parking Maneuvering Assistant

G30 Parking Maneuvering Assistant system components

Index	Explanation
1	Ultrasonic sensors of Parking Maneuvering Assistant (PMA)
2	Digital Motor Electronics (DME)
3	Body Domain Controller (BDC)
4	Central Information Display (CID)
5	Head Unit High
6	Advanced Crash Safety Module (ACSM)
7	Controller (CON)

cardiagn.com

Index	Explanation
8	Parking assistance button
9	Ultrasonic sensors, Park Distance Control, rear side
10	Control unit for Parking Maneuvering Assistant (PMA)
11	Ultrasonic sensors, Park Distance Control, rear
12	Steering column switch cluster (SZL)
13	Instrument panel (KOMBI)
14	Control unit for Optional Equipment System (SAS)
15	Dynamic Stability Control (DSC)
16	Digital Engine Electronics 2 (DME2)
17	Electronic Power Steering (EPS)
18	Electronic transmission control (EGS)
19	Ultrasonic sensors for Park Distance Control, front

19.3. System wiring diagram

The system wiring diagram on the next page shows an overview of the system components used when parking and maneuvering the vehicle. Depending on the vehicle equipment, partial scopes may also be installed.

cardiagn.com

G30 Driver Assistance Systems

19. Parking Maneuvering Assistant

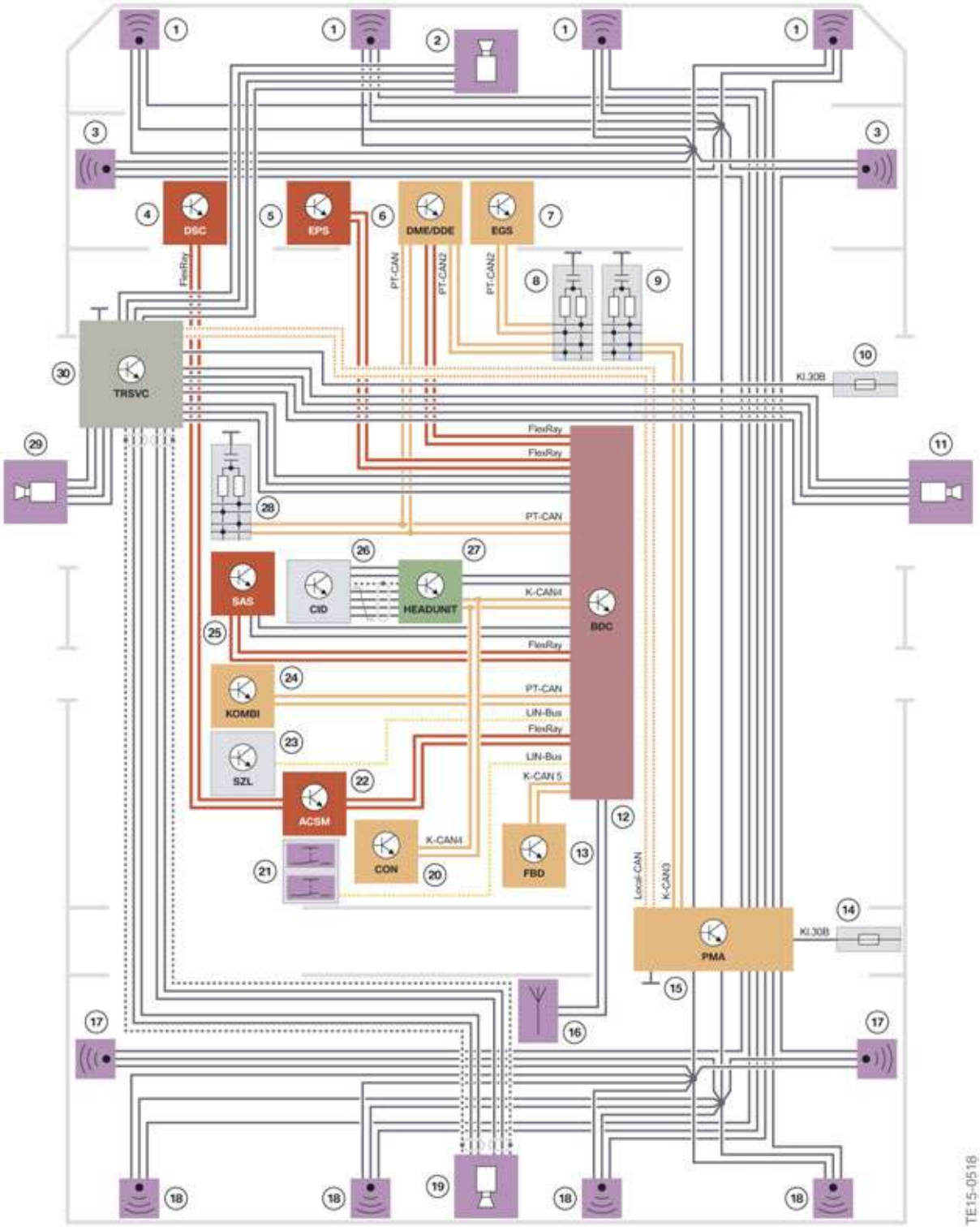

G30 Parking and maneuvering system wiring diagram

cardiagn.com

G30 Driver Assistance Systems

19. Parking Maneuvering Assistant

Index	Explanation
1	Ultrasonic sensors for Park Distance Control, front
2	Front camera
3	Ultrasonic sensors for Parking Maneuvering Assistant (PMA)
4	Dynamic Stability Control (DSC)
5	Electronic Power Steering (EPS)
6	Digital Motor Electronics (DME)
7	Electronic transmission control (EGS)
8	CAN terminator
9	CAN terminator
10	Fuse for front right power distribution box
11	Right side view camera
12	Body Domain Controller (BDC)
13	Remote control receiver (FBD)
14	Fuse for rear right power distribution box
15	Control unit for Parking Maneuvering Assistant (PMA)
16	Remote Control Parking aerial
17	Ultrasonic sensors, Park Distance Control, rear side
18	Ultrasonic sensors, Park Distance Control, rear
19	Rear view camera (RFK)
20	Controller (CON)
21	Parking assistance button and button for camera activation
22	Advanced Crash Safety Module (ACSM)
23	Steering column switch cluster (SZL)
24	Instrument panel (KOMBI)
25	Control unit for Optional Equipment System (SAS)
26	Central Information Display (CID)
27	Head Unit High
28	CAN terminator
29	Left side view camera
30	Top Rear Side View Camera (TRSVC) control unit

cardiagn.com

19.4. Control unit

In vehicles with the Parking Maneuvering Assistant, both the Park Distance Control and Parking Maneuvering Assistant functions are provided by the PMA control unit.

G30 Control unit for Parking Maneuvering Assistant (PMA)

19.5. Functional principle

The system measures potential parking spaces when driving past at a speed below approximately 22 mph (35 km/h) even without the system having been activated.

The parking spaces are measured by two additional ultrasonic sensors, which are integrated into the front wheel arch. Two additional ultrasonic sensors are installed in the rear bumper in the G30 to precisely detect the size of a perpendicular parking space during the parking maneuver. The additional ultrasonic sensors measure the distance to detected objects.

The four sensors are connected to the Parking Maneuvering Assistant (PMA) control unit, which also incorporates the Park Distance Control function. The function of the four ultrasonic sensors is similar to that of the Park Distance Control (PDC). Ultrasonic pulses are sent and echo impulses are received.

If a parking space of a sufficient length and width is found and the system is activated, the driver is shown the space on the Central Information Display.

When searching for a parking space and when parking, all relevant information is presented to the driver in an integrated display; from the parking space itself to the status of the parking assistant and corresponding handling instructions to distances from other objects.

The driver is still responsible for monitoring the vehicle environment and can intervene in the automatic parking maneuver at any time if required due to the vehicle environment.

The Parking Maneuvering Assistant (PMA) takes over complete control of the vehicle including steering, braking and gear selection.

cardiagn.com

19.5.1. Personal responsibility

- Directly monitor gaps and the parking procedure and intervene if necessary, as otherwise there is a risk of accidents.
- If a parking space that has already been measured changes, the system does not take this into account.
- The system does not take loads that project above the vehicle into account during parking.
- The Parking Maneuvering Assistant (PMA) may steer the vehicle over or up onto curbs. You should therefore use the facility for active intervention at any time with caution as you may otherwise damage wheels and tires or the vehicle itself.

⚠

The Parking Maneuvering Assistant (PMA) does not relieve the driver of personal responsibility during parking. Therefore, be attentive in order to be able to actively intervene at any time. Otherwise, there is a risk of an accident.

19.6. Functional prerequisites

To use the Parking Maneuvering Assistant function, the following basic prerequisites must be met:

- The doors must be closed
- The trunk lid must be closed
- The driver's seat belt must be fastened
- The parking brake must be released

cardiagn.com

19.6.1. Measuring parking spaces

Parking spaces are measured while driving. The following parameters apply:

- Driving forwards straight-ahead up to approximately 22 mph (35 km/h)
- Maximum distance to the row of parked vehicles: 5 ft (1.5 m)

Detecting the curb

If a curb is detected within the range of the ultrasonic sensor while the system is searching for a parking space, the parking space is, for the most part, a space that is parallel to the road.

In the case of parking spaces that are perpendicular to the roadway, the curb is usually outside the detection range of the ultrasonic sensors (range approximately 14 ft (4.2 m)).

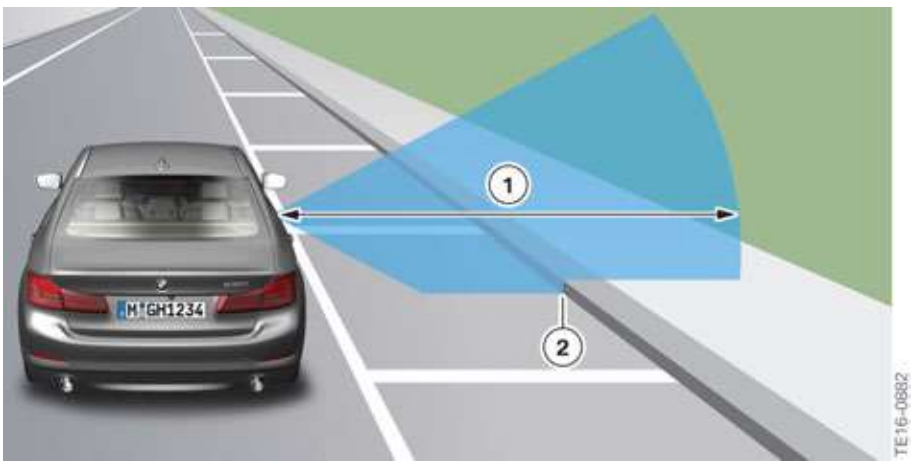

G30 Curb detection via the ultrasonic sensors

Index	Explanation
1	Range approximately 4.2 m; opening angle of ultrasonic sensors vertical ± 30°
2	Curb detection

Additional information on parking spaces suitable for the Parking Maneuvering Assistant may be found in the “G12 Driver Assistance Systems” reference manual (section 19.5.2-19.5.4).

cardiagn.com

19.7. Operation

There are two ways to activate the Parking Maneuvering Assistant function:

- Activation via parking assistance button
- Activation by "Engaging reverse gear" followed by "iDrive controller operation"

Activation via parking assistance button

When the PMA is activated via the parking assistance button in the center console, the parking assistance menu in the Central Information Display (CID) is displayed. As soon as a parking space is found, the driver receives handling instructions that guide him though the parking procedure with the support of the system.

G30 Switch block with parking assistance button

Index	Explanation
1	Parking assistance button

Activation by "Engaging reverse gear" followed by "iDrive controller operation"

When reverse gear is engaged, the Parking Maneuvering Assistant menu is displayed on the Central Information Display accompanied by the status of the parking space search. The Parking Maneuvering Assistant (PMA) is, however, not yet activated. This is indicated to the driver by the Parking Maneuvering Assistant symbol in the toolbar of the Central Information Display. In order to park supported by the system, the parking operation must be activated via the controller by selecting the corresponding symbol in the symbol bar at the Central Information Display (CID).

cardiagn.com

19.7.1. Park procedure

As soon as a parking space is found, the driver is instructed to stop the vehicle and confirm the parking space by using the turn indicator corresponding to the parking direction. During the entire parking procedure, the driver receives further instructions that guide him though the entire parking procedure with the support of the system.

The driver is prompted to take his hands from the steering wheel during automatic parking and hold down the parking assistance button until the parking procedure is complete.

19.7.2. Deactivation criteria

Manual deactivation criteria

The Parking Maneuvering Assistant (PMA) can be deactivated at any time, if necessary, by the driver via the controller by selecting the corresponding symbol in the symbol bar on the Central Information Display (CID). Another way to deactivate the Parking Maneuvering Assistant (PMA) is to release the parking assistance button in the switch block next to the iDrive controller.

If a fault develops, a Check Control message "The PDC has malfunctioned. Have system checked." is displayed in the Central Information Display (CID).

Automatic deactivation criteria

The Parking Maneuvering Assistant (PMA) is switched off automatically when the following events occur:

- The parking assistance button is released.
- The driver holds on to the steering wheel or steers himself.
- A gear is selected that does not correspond to the instruction on the control display.
- When accelerating.
- The parking brake is secured.
- The turn indicator opposite the required parking side is switched on.
- At speeds above approximately 6 mph (10 km/h).
- Possibly if the roadway is covered with snow or is slippery.
- The trunk lid is open.
- Possibly if the objects are difficult to overcome, e.g. curbs.
- If obstructions suddenly appear.
- A maximum number of parking maneuvers or the parking duration has been exceeded.

cardiagn.com

19.8. Limits of the system

The detection of objects can test the ultrasonic measurement system to its limits. Several examples of this are shown below:

- With trailer towbars and couplings.
- If the objects are thin or wedge-shaped.
- If the objects are projecting and elevated, e.g. wall projections or loads.
- If the objects have corners and sharp edges.
- If the objects have fine surfaces or structures, e.g. fences.

Low objects that are already displayed, e.g. curbs, may fall within the blind spot of the sensors before or after a continuous alarm sounds. It would not be possible to detect objects that are higher up and projecting, e.g. wall projections. Parking spaces may be detected although these are not suitable.

There may be other functional limitations in the following situations, for example:

- If the sensors are soiled or iced up.
- Heavy fog, rain or snow.
- On uneven surfaces, e.g. gravel roads.
- On slippery surfaces.
- On steep inclines or downhill gradients.
- If leaves have gathered or snow has piled up in the parking space.

To ensure the ultrasonic sensors remain fully operational, they must be kept clean and free of ice. When cleaning the sensors using a high pressure cleaner, avoid direct and sustained contact with a high-pressure water jet. Furthermore, when using high pressure cleaners, a distance of at least 1 ft (30 cm) from the sensors must be maintained.

⚠

The Parking Maneuvering Assistant (PMA) cannot replace the driver's personal judgement of the traffic situation. Also check the traffic situation around the vehicle by looking around, otherwise there may be a risk of an accident as a result of road users or objects which lie outside the detection range of the Park Distance Control. Loud sound sources outside and inside the vehicle may mask the acoustic signals of the Parking Maneuvering Assistant (PMA) or the Park Distance Control (PDC).

cardiagn.com

G30 Driver Assistance Systems

20. Remote Control Parking

The Remote Control Parking assistant became available for the first time in the G12. This assistance system enables the vehicle to be maneuvered in and out of a parking space remotely using the BMW display key. The system assists the driver to park in tight parking bays or enclosed spaces (such as garages or in multi-story car parks), where it is difficult for the driver to get in and out of the vehicle.

G30 Remote Control Parking

Automatic parking in and reversing out of bay parking spaces is possible by activating the "remote-controlled parking" function on the display key.

The Remote Control Parking, optional equipment (OE 5DV), is only available for certain models and national-market versions. In addition, the assistance system can only be ordered in conjunction with the following equipment:

- Steptronic sport transmission (OE 2TB)
- Comfort Access (OE 322)
- BMW display key (OE 3DS)
- Parking Assistant Plus (OE 5DN)
- Professional navigation system (OE 609)

The entire parking procedure is monitored by the Park Distance Control and Parking Maneuvering Assistant ultrasonic sensors and the Surround View cameras within their system limits. The driver is outside the vehicle while it is being parked. He must, however, check the situation around the vehicle by looking around and can cancel the parking procedure at any time using the BMW display key. If the driver leaves the operating range, the vehicle stops automatically.

cardiagn.com

G30 Driver Assistance Systems

20. Remote Control Parking

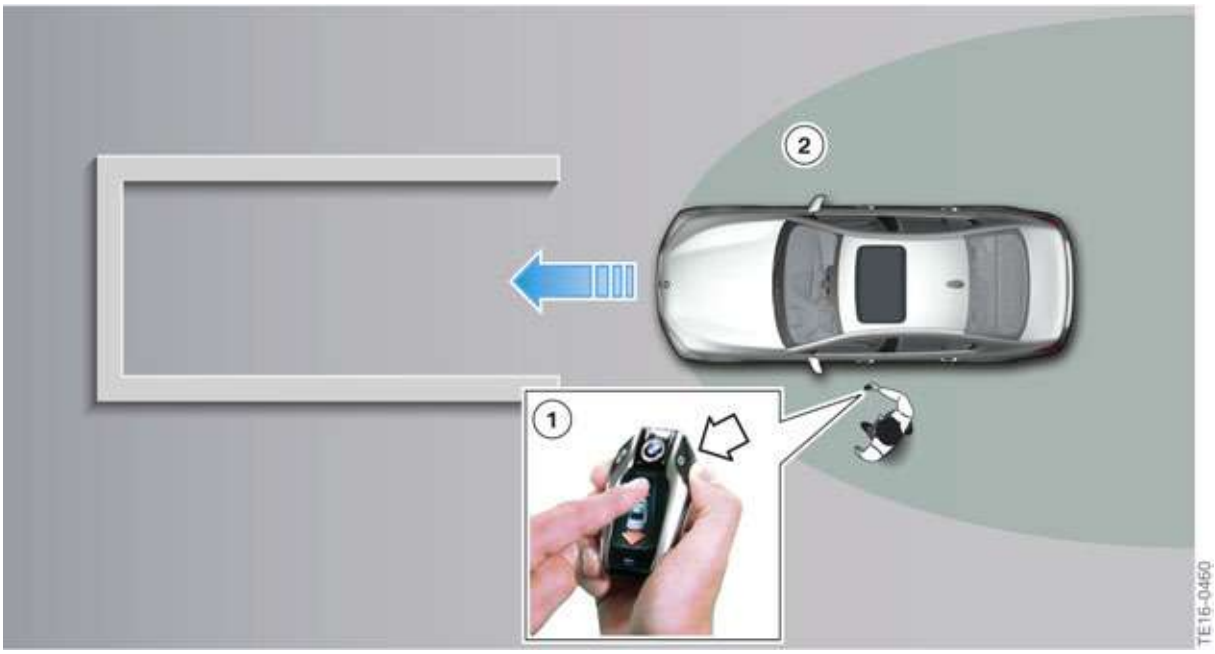

G30 Remote Control Parking

Index	Explanation
1	BMW display key
2	Operating area for remote controlled parking

20.1. Operation

The touch screen display and Remote Control Parking button on the BMW display key are used to operate the Remote Control Parking function. This makes the function intuitive to use and provides the driver with messages on the action required to operate the function and system limits.

The remote-controlled parking button must be pressed and held throughout the entire parking procedure, otherwise parking will not start or the vehicle will initiate emergency braking if the button is released (electromechanical parking brake subsequently applied). If the data transfer between the vehicle and BMW display key is interrupted, the vehicle is also decelerated to a standstill, as the data can only be transmitted in the vicinity of the vehicle.

If objects are detected, the system brakes the vehicle to a stop and prevents it from rolling away (activates the service brake and engages selector position "P"). A corresponding notification is shown to the driver in the BMW display key.

⚠

The braking process because of a detected obstacle is initiated only if this obstacle is permanently detected by the ultrasonic sensors. Objects that are, for example, too flat or are outside the detection range of the ultrasonic sensors cannot be detected. If the driver is not paying attention, there is a risk of an accident or danger of damage.

cardiagn.com

The function can continue within 30 seconds if the detected object has been removed. If this time period expires, Remote Control Parking switches off the engine and applies the electric parking brake. The parking procedure can be continued by activating the system again.

The driver must meet the following basic prerequisites before the Remote Control Parking function can be used:

- Position the vehicle facing forwards and as centrally and straight as possible in front of the parking space (maximum 3° turn angle and 4 in (10 cm) offset to the center of the parking space are compensated for by small steering adjustments).
- The vehicle should be no more than approximately 6½ ft (2 m) away from the parking space.
- Apply the electromechanical parking brake to secure the vehicle against rolling away.
- Switch off driving readiness with the start/stop button.

The graphic below shows an overview of activation of the Remote Control Parking function and its operating logic.

Activation: Remote Control Parking

Index	Explanation
1	Activate the display by pressing the button on the side of the key and then unlock it by swiping your finger upwards on the display.
2	Establish a connection to the vehicle. To do so, either change to the Remote Control Parking menu and then hold down the Remote Control Parking button, or hold down the Remote Control Parking button immediately after unlocking the display.
3	Start the engine using the BMW display key.
4	Specify the direction of travel of the vehicle by pressing the corresponding arrow symbol on the button. The vehicle will move all the time the arrow symbol is touched. If the direction arrow is released, the vehicle brakes to a stop by means of a gentle brake intervention.

The maximum distance the vehicle will travel corresponds to 1½ times the vehicle length.

cardiagn.com

20. Remote Control Parking

The BMW display key can likewise show the driver a variety of targeted instructions and fault messages, giving him direct feedback and information on operating the Remote Control Parking function.

The system does not relieve the driver of personal responsibility for correctly judging the traffic and parking situation. Due to the limits of the system, it cannot automatically react adequately in all situations. There is a risk of an accident or danger of material damage. The driver should check the traffic conditions and parking situation, and react accordingly if required.

Unauthorized persons, e.g. children, can set the vehicle in motion using the BMW display key, without anyone being in the vehicle. There is still a risk of an accident. Protect the BMW display key from unauthorized use.

20.1.1. Cut-off events

Cut-off events include:

- Opening the doors, hood or trunk lid.
- Pressing the brake or accelerator pedal (carried out by a person inside the vehicle).
- Steering interventions.
- Operating the electric parking brake or gear selector switch (carried out by a person inside the vehicle).
- Exceeding the maximum movement range.
- Selecting another function using the BMW display key.
- System fault.
- Failure or contamination of the ultrasonic sensors.
- State of charge of the BMW display key battery too low (remote-controlled parking not possible below approximately 50% absolute state of charge).
- Releasing the Remote Control Parking button.
- Background noise.
- BMW display key outside the operating range.
- Maximum speed exceeded.
- Exceeding the 5% maximum incline or downhill gradient.

cardiagn.com

20.2. Requirements on the parking space

The following graphic illustrates which conditions or prerequisites the parking space must meet to be able to use the Remote Control Parking function.

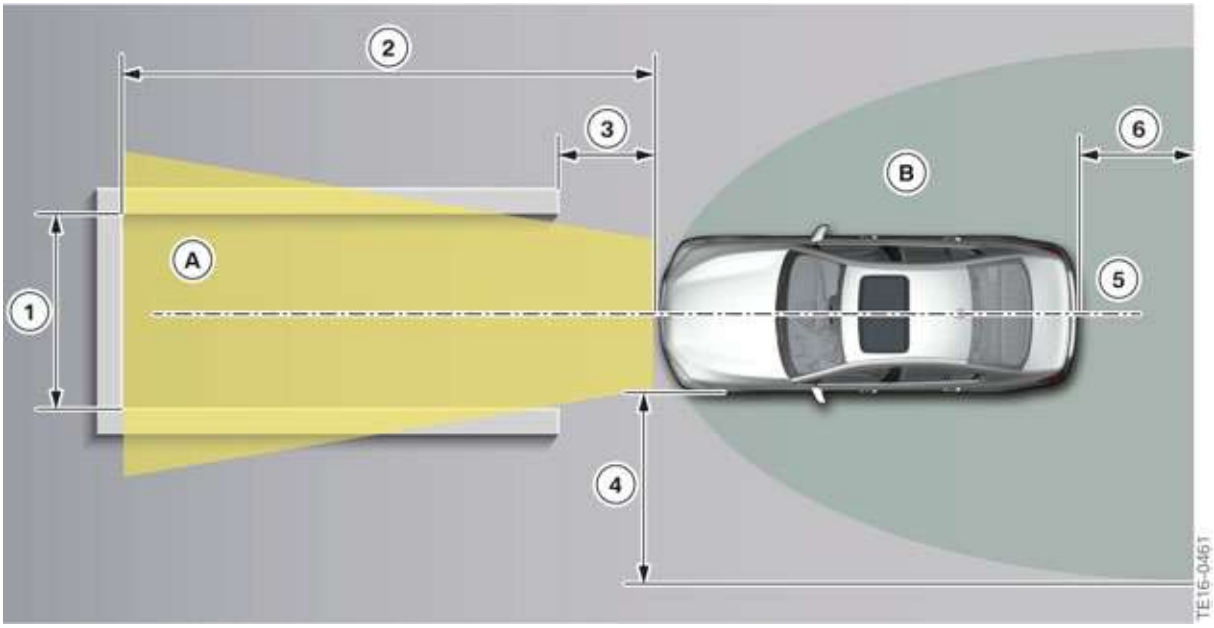

G30 Prerequisites for Remote Control Parking

Index	Explanation
A	Potential parking area
B	Operating range
1	Minimum parking space width 8.8 ft (2.7 m)
2	Maximum movement range 29.5 ft (9 m)
3	Distance to parking space, maximum 6.5 ft (2 m)
4	Maximum distance of driver from side of vehicle 5 ft (1.5 m)
5	Maximum 3° turn angle and 4 in (10 cm) offset to the center of the parking space are compensated for by small steering adjustments
6	Maximum distance of driver from rear of vehicle approximately 10 ft (3 m)

The Remote Control Parking assistance system can be used on gradients of no more than 5%. Use of the assistance system in two-level garages is **not** intended.

cardiagn.com

20.3. System overview

The Top Rear Side View Camera (TRSVC) and Optional Equipment System (SAS) control units are the central system components of the Remote Control Parking function. The Park Distance Control (PDC) and Parking Maneuvering Assistant (PMA) ultrasonic sensors, and the Surround View cameras record the area around the vehicle. The Comfort Access aerials and Remote Control Parking aerial are used to detect the location of the driver and BMW display key.

The following graphic shows the components required for Remote Control Parking in addition to those that make up the Parking Maneuvering Assistant function.

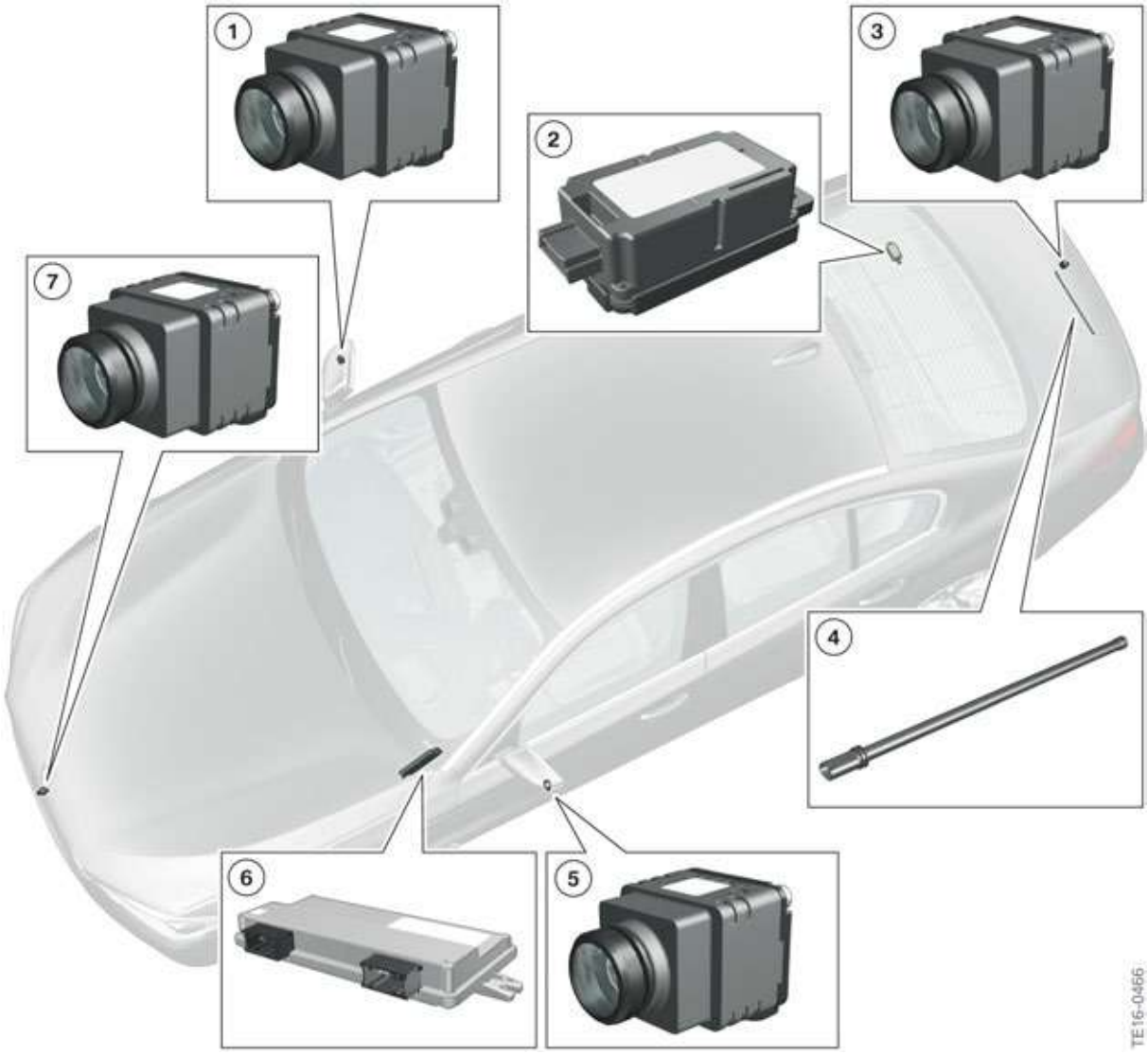

G30 Remote Control Parking system components

cardiagn.com

Index	Explanation
1	Right side view camera
2	Remote control receiver (FBD)
3	Rear view camera (RFK)
4	Remote Control Parking aerial
5	Left side view camera
6	Top Rear Side View Camera (TRSVC) control unit
7	Front camera

20.4. Limits of the system

Remote Control Parking cannot be used when trailer towing.

The function may be restricted in the following situations:

- On uneven surfaces, e.g. gravel roads.
- On slippery surfaces.
- On steep inclines or downhill gradients.
- If leaves have gathered or snow has piled up in the parking space.
- If the emergency spare wheel is fitted.
- If a parking space that has already been measured changes.
- If there are ditches or chasms, e.g. harbor edges.

Due to the technical system limits of the ultrasonic measurement, the system may react incorrectly or not at all.

Limits of the ultrasonic measurement

- If there are small children or animals.
- If the sensors are dirty, iced up, damaged or incorrectly adjusted.
- If trailer towbars and couplings are used to connect other vehicles.
- If the objects are projecting and elevated, e.g. wall projections or loads.

Further information about Remote Control Parking may be found in the “G12 Driver Assistance Systems” reference manual (section 17).

cardiagn.com

G30 Driver Assistance Systems

21. Cruise Control

21.1. Introduction

Two cruise control functions can be used in the G30. The cruise control with braking function, Dynamic Cruise Control (DCC), is part of the standard equipment.

ACC Stop&Go can be obtained if the customer opts for the Active Driving Assistant Plus, optional equipment (OE 5AT), as it is contained in this equipment package.

The cruise control systems support the driver with adapting the speed, distance and driving style to the traffic conditions, but do not relieve him of his responsibility. The driver must actively intervene, e.g. by braking, steering or taking evasive action, as otherwise there is a risk of an accident.

21.2. Cruise control with braking function

The cruise control with braking function is included as part of the G30's standard equipment. The system is also known as "Dynamic Cruise Control" (DCC). Dynamic Cruise Control (DCC) supports the driver on roads with less traffic by keeping the speed constant irrespective of rolling resistances (incline, downhill driving and vehicle load). In spite of the support, the driver remains responsible for control of the vehicle. It is possible to override the DCC function at any time by braking or accelerating the vehicle.

21.2.1. Operation

The driver has the option of adjusting the set speed in small or large increments, which is then set and maintained by the system by controlling the drive and brakes. It can be changed using the left-hand switch block on the multifunction steering wheel (MFL). The speed is increased or reduced by 1 mph by tapping the rocker switch. Each time the rocker button is pressed beyond the pressure point, the speed increases or reduces by 5 mph. The DCC steadily maintains a selected speed from approximately 20 mph (30 km/h).

The set speed is indicated in the instrument cluster in the familiar way; by a mark that moves round the speed reading. Notes are added to the displays in the instrument cluster, if necessary.

If the vehicle's own deceleration is not sufficient to maintain the preset speed, the brake is activated accordingly.

If ECO PRO or SPORT mode is activated, cruise control is also set to a fuel-efficient or sporty driving style. Due to the fuel-efficient driving style in ECO PRO driving mode, in some situations the vehicle's speed may exceed or drop below the set speed, for example on downhill gradients or inclines.

cardiagn.com

G30 Buttons of the Dynamic Cruise Control (DCC)

Index	Explanation
1	Button for activating or deactivating the Dynamic Cruise Control (DCC)
2	Rocker switch for changing the set speed
3	“SET” button for setting the speed of cruise control
4	Button for calling up a saved set speed/temporarily switching off the cruise control

The system is interrupted automatically in the following situations:

- If the brakes are used.
- If the selector lever position is moved out of position "D".
- If the Dynamic Traction Control (DTC) is activated or the Dynamic Stability Control (DSC) is deactivated.
- If the Dynamic Stability Control (DSC) is performing an adjustment.

21.3. Active Cruise Control with Stop&Go function

The Active Cruise Control with Stop&Go function (ACC Stop&Go) is offered as a function of the Active Driving Assistant Plus, optional equipment (OE 5AT), for the G30.

ACC Stop&Go adjusts a driver-specified set speed and, if required by the traffic situation, also automatically adjusts the preselected following distance to the vehicle driving ahead (detected vehicles include passenger cars, trucks and motorbikes). The application range of ACC Stop&Go ranges from higher speeds down to a standstill. The distance and the speed are automatically adjusted in this range.

cardiagn.com

G30 Driver Assistance Systems

21. Cruise Control

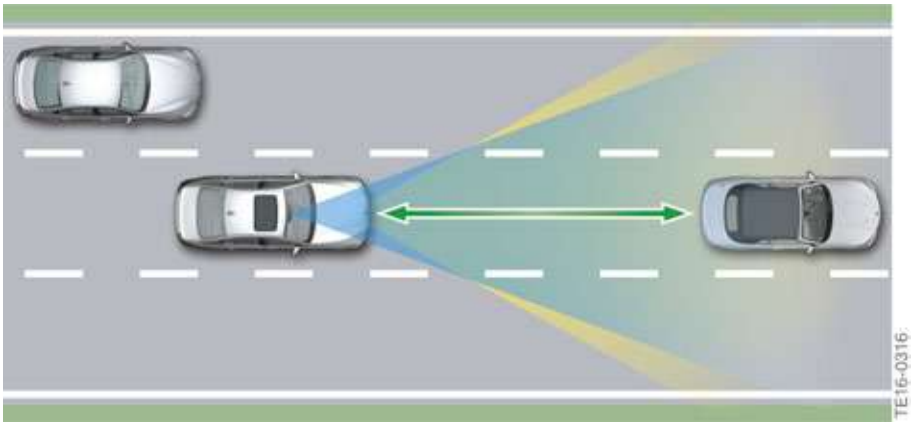

G30 Active Cruise Control (ACC) Stop&Go

Depending on the stationary time, driving off from a standstill is performed automatically or in response to a prompt by the driver. ACC Stop&Go not only detects vehicles that are slowly coming to a stop, but also stationary vehicles.

Due to improved monitoring in front of the vehicle, the system is capable of reacting more quickly to vehicles swinging in and out and turning off.

The extended application range has been achieved by the incorporation of the KAFAS stereo camera. Image data is evaluated by the ACC Stop&Go system. The KAFAS control unit clearly detects vehicles when their rear ends are recorded by the camera. In addition, the KAFAS control unit ensures that the driving lane information, vehicle positions and movements are determined.

cardiagn.com

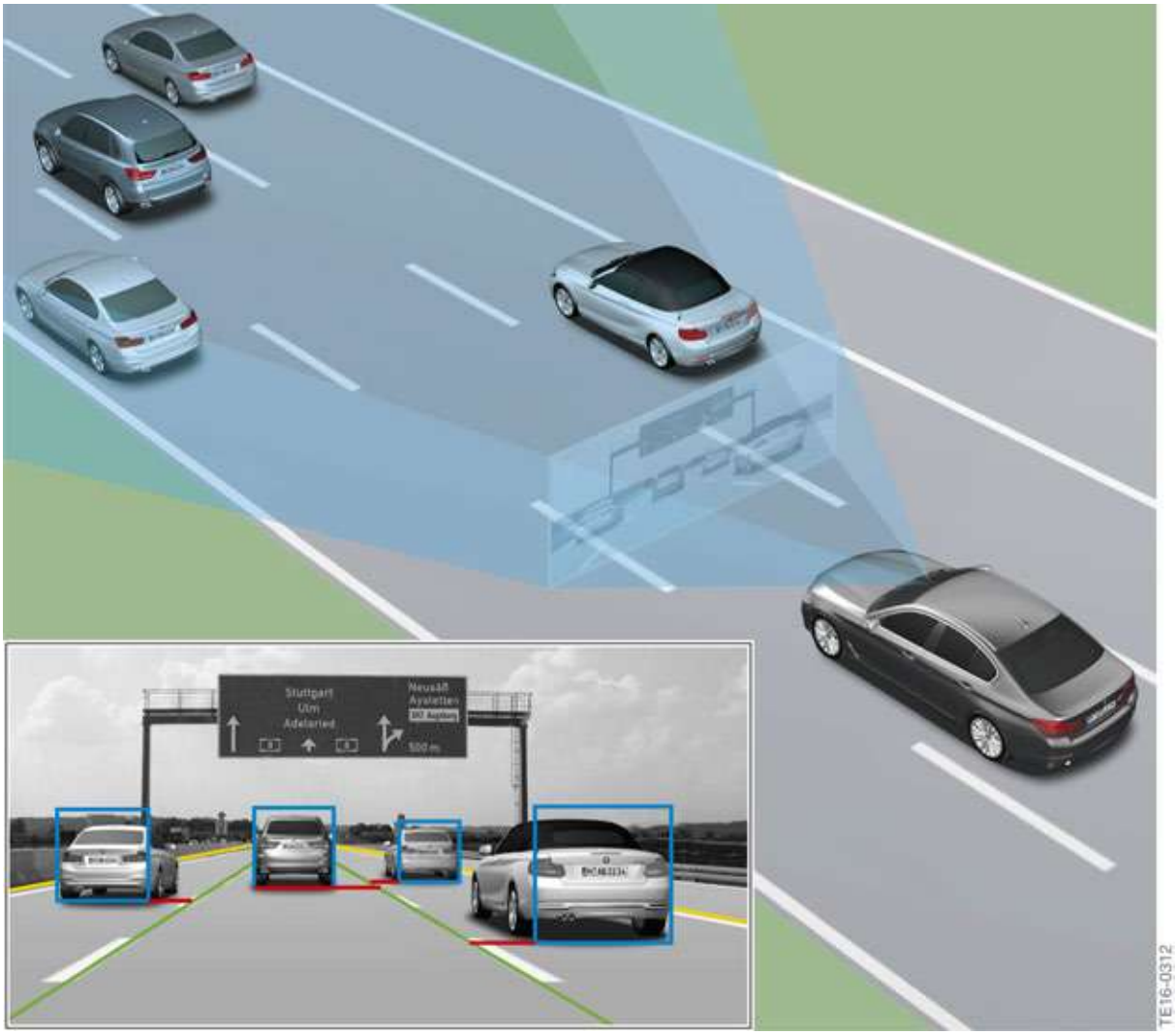

Object detection provided by a combination of radar sensor and KAFAS stereo camera.

In addition to image data, radar data is also gathered and evaluated by the radar sensors. This fusion of image and radar data makes possible the clear identification of lane markings and the distinction between stationary vehicles and other fixed objects.

cardiagn.com

G30 Driver Assistance Systems

21. Cruise Control

G30 Radar sensor/KAFAS stereo camera fusion: Radar sensor object detection

A 77 GHz radar sensor emits bundled electromagnetic waves. The echoes reflected by objects are received and evaluated by the radar sensor. This enables information about objects located in front of the radar sensor to be obtained. This information includes size, distance and the deduced speed. The system's radar sensor can identify vehicles ahead up to a distance of 650 ft (200 m), to a large extent irrespective of weather conditions.

cardiagn.com

The sensor is located behind the air inlet grille on the front bumper.

G30 Installation location of front radar sensor for ACC Stop&Go

Index	Explanation
1	Removable grille
2	Sensor for ACC Stop&Go

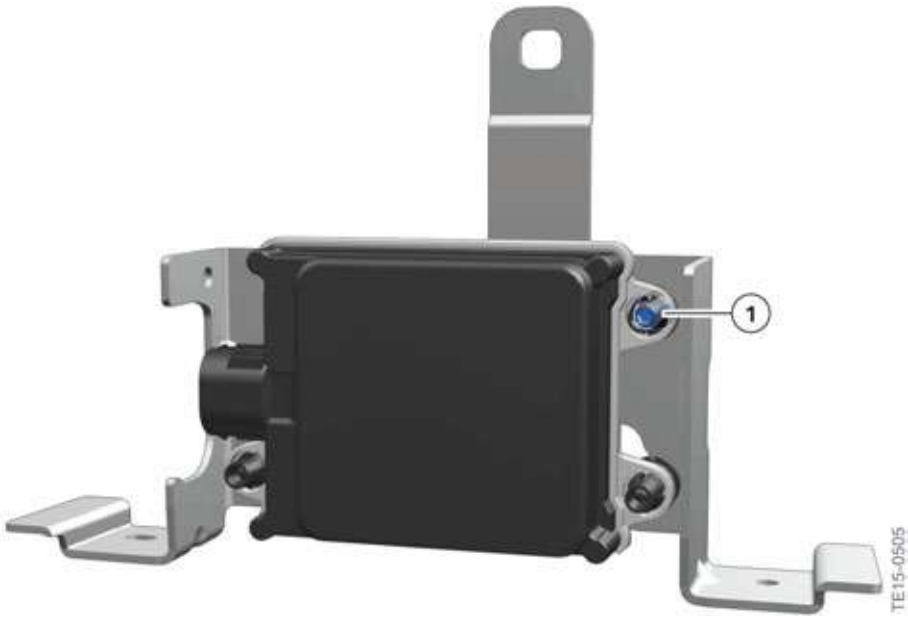

G30 Front radar sensor for ACC Stop&Go

Index	Explanation
1	Adjustment feature

cardiagn.com

21. Cruise Control

Thanks to the radar sensor's improved detection capability and alignment with the image data from the KAFAS stereo camera, vehicles in neighboring lanes are also detected. If these vehicles are driving in their own lane, then ACC Stop&Go adapts the speed to the vehicle pulling in or vehicle ahead. As a result, a time lag selected by the driver is constantly maintained.

ACC Stop&Go adjusts the speed if there is no vehicle driving directly ahead and automatically switches to distance control if the sensor system detects a slower vehicle in its lane. The system's Stop&Go function brings the vehicle to a complete standstill if necessary.

Detecting the vehicle in front of the vehicle in front

Additionally detecting the vehicle in front of the vehicle in front is likewise new on the G30.

This is analyzed using the sensors already fitted. Object detection is based on a fusion of the front radar sensor and the KAFAS stereo camera. Both sensors are, in principle, capable of detecting a vehicle two positions ahead.

In most cases, the vehicle in front of the vehicle in front is, however, concealed by the vehicle in front, which is why the camera can generally not detect it. The front radar, however, consistently provides good detection quality here by “looking under” the vehicle in front.

The advantages of this are as follows:

- Improved "driver-like" speed governing behavior
- Smoother following driving (“ACC cruising”)
- Enhanced dynamics for traffic light-controlled journeys
- Driver-like behavior when approaching distant objects

Evaluation of ultrasound data

Since both the front radar sensor and the KAFAS stereo camera are only of limited use for close-range monitoring, the ultrasonic data for the ACC Stop&Go system is evaluated for the first time on the G30. The data is provided by the front ultrasonic sensors already described. These are needed to monitor the close range in front of the vehicle for freedom from obstacles.

Coupling to the navigation system

Improved cornering behavior is made possible by coupling ACC Stop&Go to the navigation system. This contributes to a further improvement of driver-like behavior. This also takes into consideration the intention to turn off the road and intersections, among other aspects.

Restart time

The restart time after automatic braking to a stop by ACC Stop&Go previously of approximately 3 seconds has been raised to **approximately 30 seconds** on the G30.

The prerequisite for extended restarting is that the vehicle is located on a highway or a divided highway outside the town.

cardiagn.com

21. Cruise Control

If the vehicle in front starts driving again after being stopped (for more than approximately 3 seconds or longer than approximately 30 seconds on highways and divided highways), a note is shown to the driver. To drive off again the driver must confirm this note by pressing the RES/CNCL button or the accelerator pedal.

Additional convenience is provided by the extended restart time without driver intervention.

ACC Stop&Go does not only support the driver in flowing traffic, but also in traffic jam situations, both on multiple-lane highways and ordinary roads and on urban arterial and ring roads.

The adjustment range for the set speed is limited to a maximum of 130 mph (210 km/h).

If ECO PRO or SPORT mode is activated, the Active Cruise Control with Stop&Go function is also set to a fuel-efficient or sporty driving style. Due to the fuel-efficient driving style in ECO PRO driving mode, in some situations the vehicle's speed may exceed or drop below the set speed, for example on downhill gradients or inclines.

cardiagn.com

21.3.1. Operation

Activation and deactivation

The activation and deactivation of the ACC Stop&Go and the Dynamic Cruise Control are almost the same. ACC Stop&Go can either be activated while driving or at a standstill. For safety reasons, when the vehicle is at a standstill the function can only be put in Standby mode or deactivated while the foot brake is applied.

If the function is active, it can be interrupted by pressing the RES/CNCL button. The distance and speed will no longer be maintained and the set speed is greyed out in the instrument cluster.

The driver can select a desired distance in four stages using the left-hand multifunction button on the multifunction steering wheel (MFL). The following distance most recently selected is saved depending on the key being used.

- The following graphic shows the button assignment for the Driver Assistance Systems on the multifunction steering wheel (MFL) in vehicles **with** the Active Driving Assistant Plus optional equipment (OE 5AT):

G30 Buttons for ACC Stop&Go with Active Driving Assistant Plus optional equipment (OE 5AT)

Index	Explanation
1	Button for activating or deactivating the Active Lane Keeping Assistant and Traffic Jam Assistant
2	Button for activating or deactivating ACC Stop&Go
3	Rocker switch for changing the set speed
4	“SET” button for setting the speed of cruise control
5	Button for adjusting the distance of the driver's vehicle to the vehicle driving ahead
6	Button for calling up a saved set speed/temporarily switching off the cruise control

cardiagn.com

21. Cruise Control

The following conditions must also be satisfied for activation:

- Seat belt fastened and doors closed
- Drive position "D" engaged and brake pressed
- Engine running
- Parking brake not activated
- Camera and radar sensor operational
- No system faults detected

The system is interrupted automatically in the following situations:

- If the brakes are used.
- If the selector lever position is moved out of position "D".
- If the Dynamic Traction Control (DTC) is activated or the Dynamic Stability Control (DSC) is deactivated.
- If the Dynamic Stability Control (DSC) is performing an adjustment.
- If the seat belt is unfastened and the driver's door is opened in a stationary vehicle.
- If the system has not detected an object for a long time, e.g. on rarely frequented sections of road with no distinct edge.
- If the detection range of the radar is impaired, e.g. due to contamination or heavy precipitation.
- Following a longer immobilization period, if the vehicle has been decelerated to a standstill by ACC Stop&Go.

The set speed is indicated in the instrument cluster in the familiar way; by a mark that moves round the speed reading. If ACC Stop&Go is activated, this mark is green, whereas in "Standby" mode it is grey and the last set speed is displayed. After the ACC Stop&Go function is activated or after the driver has adjusted the set speed, the current digital value is displayed. If the distance is changed, a symbol appears briefly as an acknowledgement. The symbol screen masks are for example the set speed and the distance bar. With each subsequent operation the display is shown for another three seconds.

The distances set by the driver, as well as the distances to any vehicles driving ahead, that must be maintained to ensure a safe distance are displayed between the two round instruments (speed reading and engine speed display). The distance setting is stored for the ID transmitter currently being used. As with DCC, the symbol screen masks are complemented, if necessary, with notes in the instrument cluster for ACC Stop&Go.

With active control the displays are also shown in the Head-Up Display (optional equipment OE 610).

If the system can no longer adjust a safe distance, for example due to very high differential speeds, then the driver is prompted to take over the vehicle handling by a flashing red vehicle symbol and an acoustic signal.

cardiagn.com

G30 Driver Assistance Systems

21. Cruise Control

Displays

Displays in the instrument cluster when ACC Stop&Go is activated

Symbols	Explanation
	Display lights up black/grey, no vehicle symbol shown: System has been interrupted.
	Distance control briefly paused, as the accelerator pedal is depressed.
	Vehicle symbol and distance bars flash red and a signal sounds: Request for intervention by braking and, if required, evasive action.
	Distance control (ranging) active: ACC Stop&Go adjusts to the set distance (distance 1). The speedometer mark for the Active Cruise Control with Stop&Go function also lights up green in the speed reading.

cardiagn.com

Symbols	Explanation
	Distance control (ranging) active: ACC Stop&Go adjusts to the set distance (distance 2). The speedometer mark for the Active Cruise Control with Stop&Go function also lights up green in the speed reading.
	Distance control (ranging) active: ACC Stop&Go adjusts to the set distance (distance 3). The speedometer mark for the Active Cruise Control with Stop&Go function also lights up green in the speed reading. Distance 3 is approximately half the value of the speed indicator in metres and is pre-set automatically when the system is first switched on.
	Distance control (ranging) active: ACC Stop&Go adjusts to the set distance (distance 4). The speedometer mark for the Active Cruise Control with Stop&Go function also lights up green in the speed reading.

cardiagn.com

G30 Driver Assistance Systems

22. Speed Limit Warning

The driver has the option of setting a speed at which a warning is issued when the system is activated and the preset speed is exceeded.

22.1. Operation

The speed limit warning can be switched on and off in the iDrive menu, as well as the speed setting at which the warning should be issued, by making the following selection via the controller:

- "My Vehicle"
- "Vehicle settings"
- "Speed warning"
- "Warning at:"
- Turn controller until the desired speed is displayed
- Press controller
- Speed limit warning is saved

G30 Speed limit warning display on the CID

cardiagn.com

G30 Driver Assistance Systems

23. Lateral Guidance Assistants

The Active Lane Keeping Assistant with Side Collision Avoidance were introduced for the first time in the G12.

Further innovative systems are introduced with the launch of the G30. The driver of a new BMW 5 Series now also has Evasion Aid at his disposal.

23.1. Launch timeline

The graphic below shows when the lateral guidance systems were introduced:

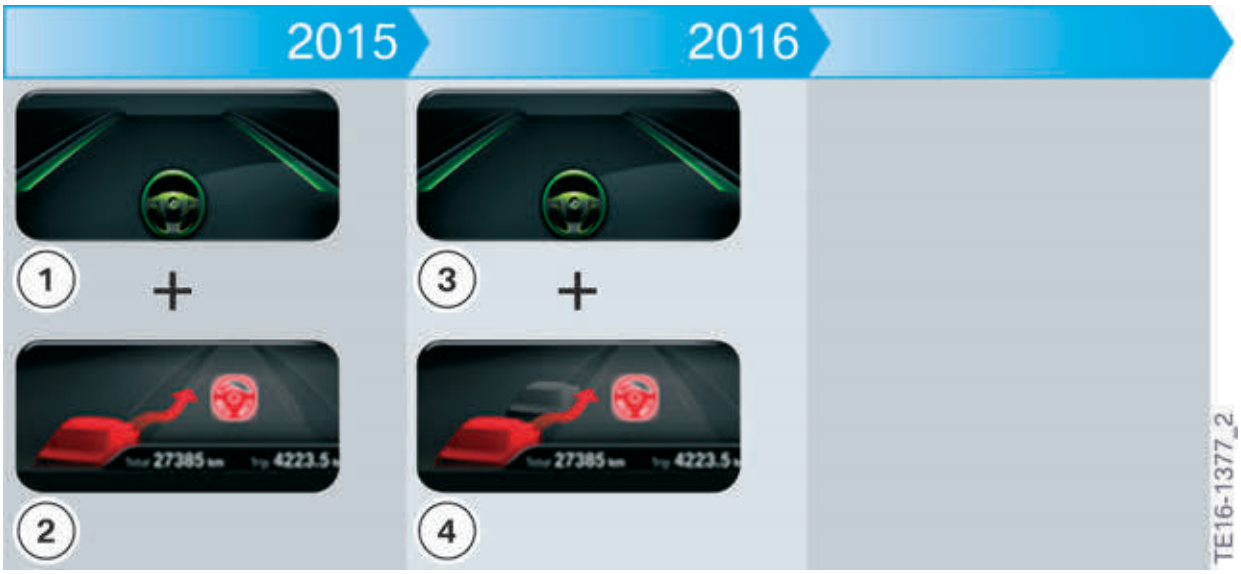

Overview of lateral guidance assistance

cardiagn.com

G30 Driver Assistance Systems

23. Lateral Guidance Assistants

Index	System	Functional characteristics of the systems
1	Second generation Traffic Jam Assistant (from 2015 with launch of G12)	• 0 – 43 mph (0 – 70 km/h) • Traffic jam following distance control with lane center guidance • No road-type restrictions
1	Active Lane Keeping Assistant (from 2015 with launch of G12)	• 43 – 130 mph (70 – 210 km/h) • Lane center guidance • No road-type restrictions
2	Active Lane Keeping Assistant with Side Collision Avoidance (from 2015 with launch of G12)	• 18 – 43 mph (30 – 70 km/h) (warning in form of single steering wheel pulse) • 43 – 130 mph (70– 210 km/h) (corrective steering interventions) • Active steering interventions in situations where a collision is imminent • No road-type restrictions
3	Second generation Traffic Jam Assistant	• 0 – 43 mph (0 – 70 km/h) • Traffic jam following distance control with lane center guidance • No road-type restrictions
3	Active Lane Keeping Assistant	• 43 – 130 mph (70 – 210 km/h) • Lane center guidance • No road-type restrictions
4	Active Lane Keeping Assistant with Side Collision Avoidance	• 18 – 43 mph (30 – 70 km/h) (warning in form of single steering wheel pulse) • 43 – 130 mph (70– 210 km/h) (corrective steering interventions) • Active steering interventions in situations where a collision is imminent • No road-type restrictions
4	Evasion Aid (from 2016 with the launch of the G30)	• 25 – 100 mph (40 – 160 km/h) • Supporting steering intervention after warning from the collision warning system and previously initiated avoidance maneuver

cardiagn.com

G30 Driver Assistance Systems

24. Lane Keeping & Traffic Jam Assistants

What drivers wish for most while driving is relief from monotonous situations such as sitting in a jam or slow moving traffic. In addition to Active Cruise Control with Stop&Go function, drivers are now also supported by Active Lane Keeping Assistant. The Active Lane Keeping Assistant was first introduced in the G12.

The Active Lane Keeping Assistant and Traffic Jam Assistant are part of the Active Driving Assistant Plus, optional equipment (OE 5AT).

The system assists the driver in keeping the vehicle in lane by initiating corrective steering interventions if required.

G30 Active steering intervention

24.1. Functional principle

Depending on the speed, the system is guided by the lane edges or vehicles driving ahead.
The position of the lane edges and the vehicle driving ahead is determined with the help of five radar sensors and the KAFAS stereo camera.

cardiagn.com

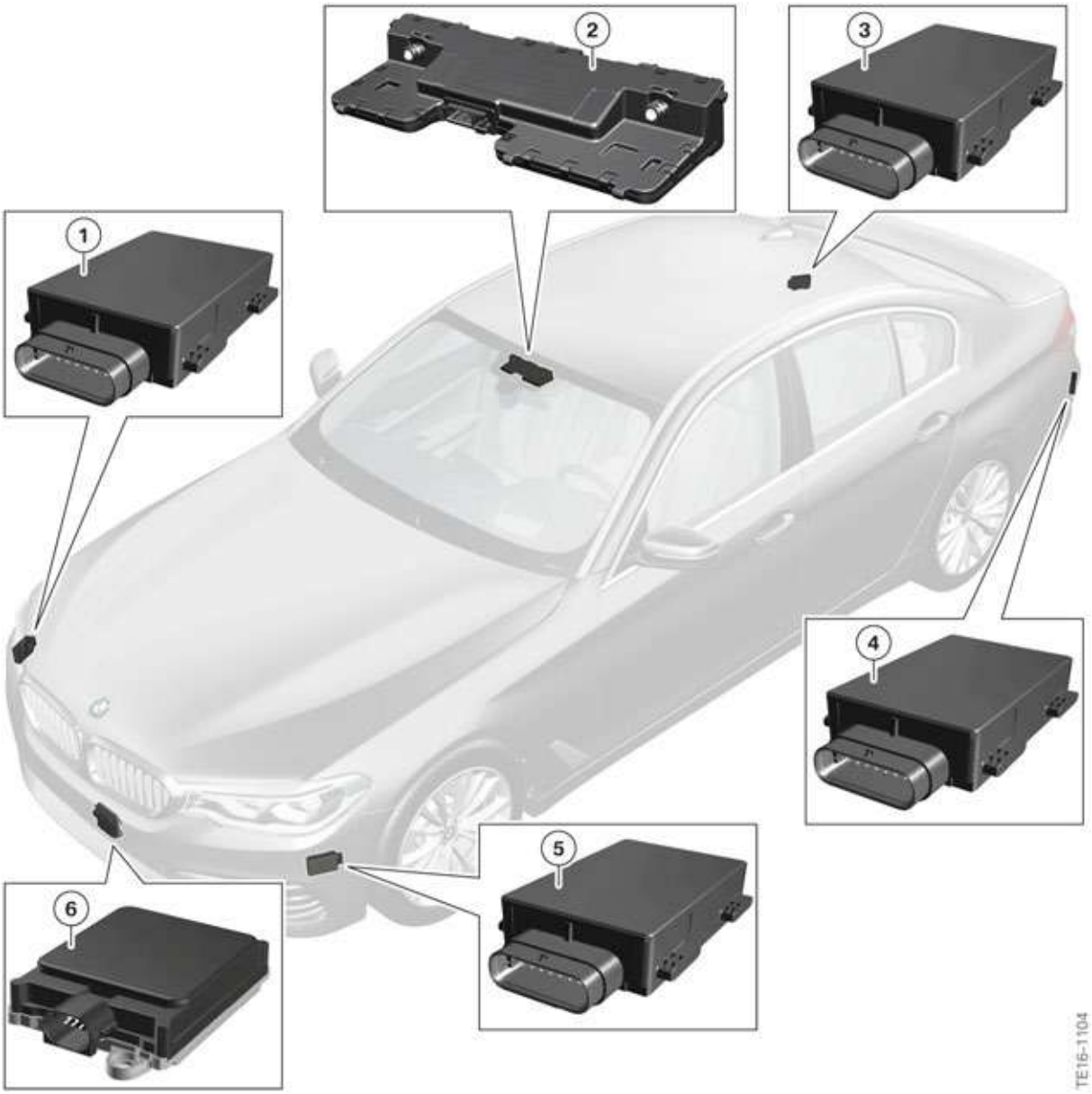

G30 Installation locations of radar sensors and KAFAS stereo camera

Index	Explanation
1	Control unit for radar sensor, right (RSR)
2	KAFAS stereo camera
3	Blind Spot Detection (primary)
4	Blind Spot Detection (secondary)
5	Control unit for radar sensor, left (RSL)
6	Active Cruise Control (ACC)

cardiagn.com

24. Lane Keeping & Traffic Jam Assistants

The system has two subfunctions: the Traffic Jam Assistant (second generation) and the Active Lane Keeping Assistant.

The Traffic Jam Assistant is available for speeds up to approximately 43 mph (70 km/h), the Active Lane Keeping Assistant from approximately 43 mph (70 km/h) to approximately 130 mph (210 km/h).

The table below shows an overview of the differences between the two subfunctions:

Traffic Jam Assistant	Active Lane Keeping Assistant
Speed range 0 – 43 mph (0 – 70 km/h)	Speed range from 43 – 130 mph (70 – 210 km/h)
Corrective steering interventions in the direction of the vehicle driving ahead	Corrective steering interventions in the direction of the center of the lane
Detected lane markings taken into consideration	Gaps in lane markings can be bridged for a limited time by aligning with vehicle ahead

If the Traffic Jam and Active Lane Keeping Assistants are activated, the Side Collision Avoidance is also interlinked.

24.1.1. Hands-off-Detection

To ensure the driver is alert and able to react, he is urged to always have both hands on the steering wheel when the Active Lane Keeping Assistant and Traffic Jam Assistant are activated (established in the German road traffic regulations). If the driver takes both hands off the steering wheel rim, control is stopped after a few seconds during active control and the driver is requested to take over steering.

Additional information about Hands-off-Detection may be found in the “G12 Driver Assistance Systems” reference manual (section 23.1.1).

24.1.2. Functional prerequisites

The following prerequisites must be met in order for the Active Lane Keeping Assistant and Traffic Jam Assistant to be used:

- Speed must be below 130 mph (210 km/h).
- Above 43 mph (70 km/h): both lane edges must be detected.
- Below 43 mph (70 km/h): both lane edges or a vehicle driving ahead must be detected.
- The lane width must be sufficient.
- The vehicle should be positioned as centrally as possible in the lane.
- There must be a sufficient curve radius.
- At least one hand must be on the steering wheel rim.
- The turn indicator must not be activated.
- The camera calibration process must be completed immediately after vehicle delivery.

The active lateral control function with data evaluation of the KAFAS stereo camera is implemented with the assistance of the lane markings identified on the left and right.

cardiagn.com

In order for the system to be activated, two lane boundary lines must be detected. Below a speed of approximately 43 mph (70 km/h) a vehicle driving ahead in the same lane is sufficient to activate the system.

The system is put in Standby mode if the marginal conditions are not satisfied (e.g. hands not on steering wheel, lane too narrow or dazzling of KAFAS stereo camera). Once all marginal conditions have been met, the system is re-enabled automatically.

To activate the system, the speed of the vehicle is another input quantity that is evaluated. The system uses these values to decide which function will be enabled. As mentioned above, the threshold values are set as follows:

- The Traffic Jam Assistant can be enabled within a speed range of 0 to approximately 43 mph (70 km/h).
- The Active Lane Keeping Assistant can be enabled within a speed range from approximately 43 to approximately 130 mph (70 to approximately 210 km/h).

24.1.3. Lane change

For a lane change to be as comfortable as possible, the Active Lane Keeping Assistant and Traffic Jam Assistant are put silently into Standby mode when the turn indicator is activated and reactivates itself automatically once the turn indicator is back in its initial position and a lane change has occurred.

24.1.4. Function logic

The main function logic of the lateral guidance is implemented in the Optional Equipment System (SAS) control unit.

The majority of the data for the function is provided by the KAFAS stereo camera, where algorithms for the lane and object detection run.

Vehicle dynamics data, such as the driving speed, wheel speeds, yaw rate, steering angle, lateral acceleration, longitudinal acceleration, etc., is provided by the rest of the vehicle network via a FlexRay or CAN connection.

A target trajectory (also known as a path curve) is calculated in the Optional Equipment System (SAS) control unit. This is used to determine whether a steering correction is required.

cardiagn.com

24.1.5. Steering interventions

If the current course of the vehicle deviates too much from the target trajectory (path curve), a steering correction is initiated.

The steering intervention is a corrective measure. This means the driver is not relieved of his duty to steer the vehicle. As the corrective steering interventions are limited to approximately 1.5 m/s² based on the lateral acceleration, the system cannot navigate curves above the respective speed-dependent curve radius without the driver's assistance. The driver must therefore steer the vehicle at the same time in order to stay on the roadway.

The target trajectory and required steering corrections are calculated based on the driving speed as follows:

Speed range 0 to 43 mph (0 to 70 km/h):

- The position and previous movements of the vehicle driving ahead are given priority when determining the appropriate steering corrections.
- Detected lane markings are taken into account to avoid unwanted steering corrections that would result in leaving the lane.
- Corrective steering interventions in the direction of the center of the lane are initiated if the vehicle detects there is not a vehicle driving ahead.

Speed range 43 to 80 mph (70 km/h to 130 km/h):

- Corrective steering interventions in the direction of the center of the lane are initiated.
- It is possible to bridge the gap for a limited time where lane markings are not detected by estimating the course of the lane based on the vehicle driving ahead.

Speed range 80 to 130 mph (130 km/h to 210 km/h):

- Corrective steering interventions in the direction of the center of the lane are initiated.
- For safety reasons above a driving speed of approximately 80 mph (130 km/h) the course of the lane is **not** estimated using the vehicle driving ahead.

The vehicle driving ahead is given priority as the "correction target" at speeds up to approximately 43 mph (70 km/h) due to the limited detection of lane markings.

In traffic jams or slow-moving traffic following distances are often extremely small (< 30 ft (< 10 m)) due to tailgating and lanes ahead are often partially covered due to staggered driving.

This means the KAFAS stereo camera is unable to correctly interpret the lane markings in some cases.

When classifying the object driving ahead, vehicles such as motorbikes are not used as the "correction target".

cardiagn.com

Steering momentum

The driving dynamics function software in the Dynamic Stability Control (DSC) control unit calculates a target steering torque based on the curve nominal value. The target steering torque is then converted to an engine torque by the Electronic Power Steering (EPS), which finally results in a steering wheel movement at the wheels.

The maximum steering torque has been set in such a way that it can always be overruled by the driver and therefore steering past the maximum steering torque is possible.

24.1.6. Operation

The system is switched on via the Traffic Jam Assistant button on the multifunction steering wheel (MFL).

G30 buttons for ACC Stop&Go with Active Driving Assistant Plus optional equipment (OE 5AT)

Index	Explanation
1	Button for activating or deactivating the Active Lane Keeping Assistant and Traffic Jam Assistant
2	Button for activating or deactivating ACC Stop&Go
3	Rocker switch for changing the set speed
4	“SET” button for setting the speed of cruise control
5	Button for adjusting the distance of the driver's vehicle to the vehicle driving ahead
6	Button for calling up a saved set speed/temporarily switching off the cruise control

cardiagn.com

Displays

Symbols	Explanation
TE15-0986	Grey steering wheel symbol: • The system has been interrupted and will not make any further steering wheel movements. The system is in Standby mode. • Once the system conditions are met, the system reactivates itself automatically.
TE15-0982	Green steering wheel symbol and lane edges: • The system assists in keeping the vehicle in the lane.
TE15-0983	Green steering wheel symbol, grey lane edges: • No lane edges detected. The vehicle follows the vehicle driving ahead.
TE15-0984	Yellow steering wheel symbol: • Request for driver to place hands back on the steering wheel (grasp steering wheel). System continues to be active.
TE15-0985	Red steering wheel symbol and acoustic signal sounds: • The system has been interrupted. It will not make any further steering wheel movements.

Configuration options

The driver can change the system settings in the Intelligent Safety configuration menu.

cardiagn.com

24.1.7. Deactivation criteria

The Active Lane Keeping Assistant and Traffic Jam Assistant is deactivated automatically in the following situations:

- If the vehicle departs from the detected lane or the lane width does not meet the requirements.
- If the lane edges of the current lane are not detected by the KAFAS stereo camera.
- If no vehicle driving ahead is detected.
- The vehicle is travelling at a speed greater than 130 mph (210 km/h).
- If the Hands-off-Detection cannot detect the hands (at least one hand) on the steering wheel rim. The system is switched off once a defined time threshold (several seconds) has elapsed.
- Due to the radius of the bend in the road, the inner lane edge is no longer detected due to the camera aperture angle.
- Pedestrian protection assumes the operating condition "Fault exists".
- If the turn indicator is on.
- The driver intervenes actively in the steering.
- If over a certain time period no lane edges are detected and there is not a vehicle driving ahead.
- If the driver manually deactivates the DSC (DSC off).
- If there is an intervention from the preventative pedestrian protection.
- After Dynamic Brake Control braking (brake assistant).

24.1.8. Limits of the system

When driving in narrow lanes, e.g. when driving through construction zones or when emergency lanes are formed, the system cannot be activated or used meaningfully.

⚠

Due to the limited detection capacity of the KAFAS stereo camera, the driver must remain alert and observant in order to be able to actively intervene at any time so as to avoid the risk of an accident. The system does not relieve the driver of personal responsibility for correctly judging the traffic situation. The driver is solely responsible for the vehicle.

cardiagn.com

G30 Driver Assistance Systems

25. Active Lane Keeping Assistant

The Active Lane Keeping Assistant with Side Collision Avoidance is part of the Active Driving Assistant Plus, optional equipment (OE 5AT).

By making corrective steering interventions, the system, already familiar from the G12 helps the driver to keep the vehicle in lane at speeds from approximately 43 mph (70 km/h) to approximately 130 mph (210 km/h) and to actively avoid potential side collisions. The system endeavors to orient the vehicle in its lane according to the situation and within the framework of the system limits.

The system consists of the following four subfunctions:

- Side Collision Avoidance
- Reduced Side Collision Avoidance
- Lane Departure Warning
- Blind Spot Detection

25.1. Side Collision Avoidance

The table below shows an overview of the functional characteristics of the "Side Collision Avoidance" subfunction:

Speed range	Warning functions	Corrective steering intervention
43 – 130 mph (70 – 210 km/h)	• Issued if the vehicle detects that it is getting critically close to another vehicle to the side • Haptic warning in the form of vibration in the steering wheel using an unbalanced actuator • Visual warning in exterior mirror in the form of the corresponding warning light	• Corrective steering intervention in the direction of the available space on the roadway Requirements: • Detected lanes • Sufficient available space on the roadway 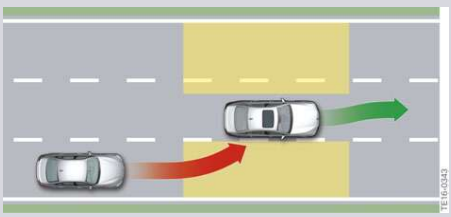

25.1.1. Reduced Side Collision Avoidance

The Reduced Side Collision Avoidance comes into play if it is not possible to adequately monitor the available space on the roadway or there is no available space on the roadway.

The Reduced Side Collision Avoidance is interlinked with the Active Lane Keeping Assistant and Traffic Jam Assistant functions.

cardiagn.com

The table below shows an overview of the functional characteristics of the "Reduced Side Collision Avoidance" subfunction:

Speed range	Warning functions	Corrective steering intervention
18 – 130 mph (30 – 210 km/h)	• Issued if the vehicle detects that it is getting critically close to another vehicle to the side • Haptic warning in the form of vibration in the steering wheel using an unbalanced actuator • Visual warning in exterior mirror in the form of the corresponding warning light • 18 – 46 mph (30 – 75 km/h) additional warning in form of single steering wheel pulse	• A corrective steering intervention is **not** initiated; instead only a single steering wheel pulse warning is issued in the opposite direction to the detected object the vehicle could collide with.

25.2. Lane Departure Warning

The table below shows an overview of the functional characteristics of the "Lane Departure Warning" subfunction:

Speed range	Warning functions	Corrective steering intervention
43 – 130 mph (70 – 210 km/h)	• Triggered if a lane departure is detected by the Lane Departure Warning function. The associated haptic warning in the form of a vibration in the steering wheel using an unbalanced actuator is issued and visual warning in the exterior mirror in the form of the corresponding warning light.	• Corrective steering intervention in the direction of the original lane if vehicle moves towards neighboring lane Requirements: • Detected lanes 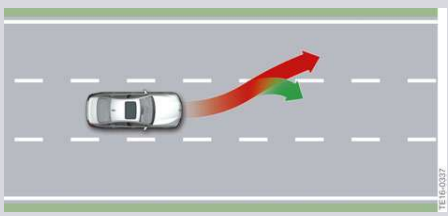

cardiagn.com

25.3. Blind Spot Detection

The table below shows an overview of the functional characteristics of the "Blind Spot Detection" subfunction:

Speed range	Warning functions	Corrective steering intervention
43 – 130 mph (70 – 210 km/h)	• Triggered if a lane change that could result in a collision is detected by the Blind Spot Detection function. The associated haptic warning in the form of a vibration in the steering wheel using an unbalanced actuator is issued and visual warning in the exterior mirror in the form of the corresponding warning light.	• Corrective steering intervention in the direction of the available space on the roadway when lane change intention is made and neighboring lane is obstructed Prerequisites: • Detected lanes • Sufficient available space on the roadway

Further information can be found in the system descriptions of the respective subfunctions (see section 8–10).

⚠

The Active Lane Keeping Assistant with Side Collision Avoidance does not relieve the driver of his overall responsibility for driving the vehicle. Due to the system limits be attentive in order to be able to actively intervene at any time. Otherwise, there is a risk of an accident.

cardiagn.com

G30 Driver Assistance Systems

26. Evasion Aid

Often a collision with another vehicle (at the end of a traffic jam for example) or obstacle can only be prevented by an avoidance maneuver. Since the driver's response time plays a decisive role in an avoidance maneuver just as in a braking maneuver, Evasion Aid is able to make a considerable contribution to avoiding an impending collision.

Evasion Aid supports the driver in such critical driving situations with a focused steering intervention if the driver needs to avoid an obstacle. The system also help keep the vehicle stable during and after the avoidance maneuver.

This is achieved by an interaction between the Dynamic Stability Control (DSC), the Electronic Power Steering (EPS) and the analysis of data from the assistance sensors.

G30 Evasion Aid: interaction of Dynamic Stability Control(DSC) and Electronic Power Steering (EPS)

Evasion Aid is a function of the Active Driving Assistant Plus, optional equipment (OE 5AT), and is fitted in the G30 for the first time.

26.1. Functional principle

An emergency avoidance maneuver takes place when a suddenly occurring obstacle is detected in front of the vehicle and the driver has to avoid this obstacle quickly and without “significant” braking.

Evasion Aid supports the driver in avoidance maneuvers in emergency situations and calculates an optimum “escape track” past the obstacle.

The “escape track” is calculated within the physical limits of the particular vehicle. The calculated “escape track” is designed to minimize transverse dynamics.

cardiagn.com

G30 Driver Assistance Systems

26. Evasion Aid

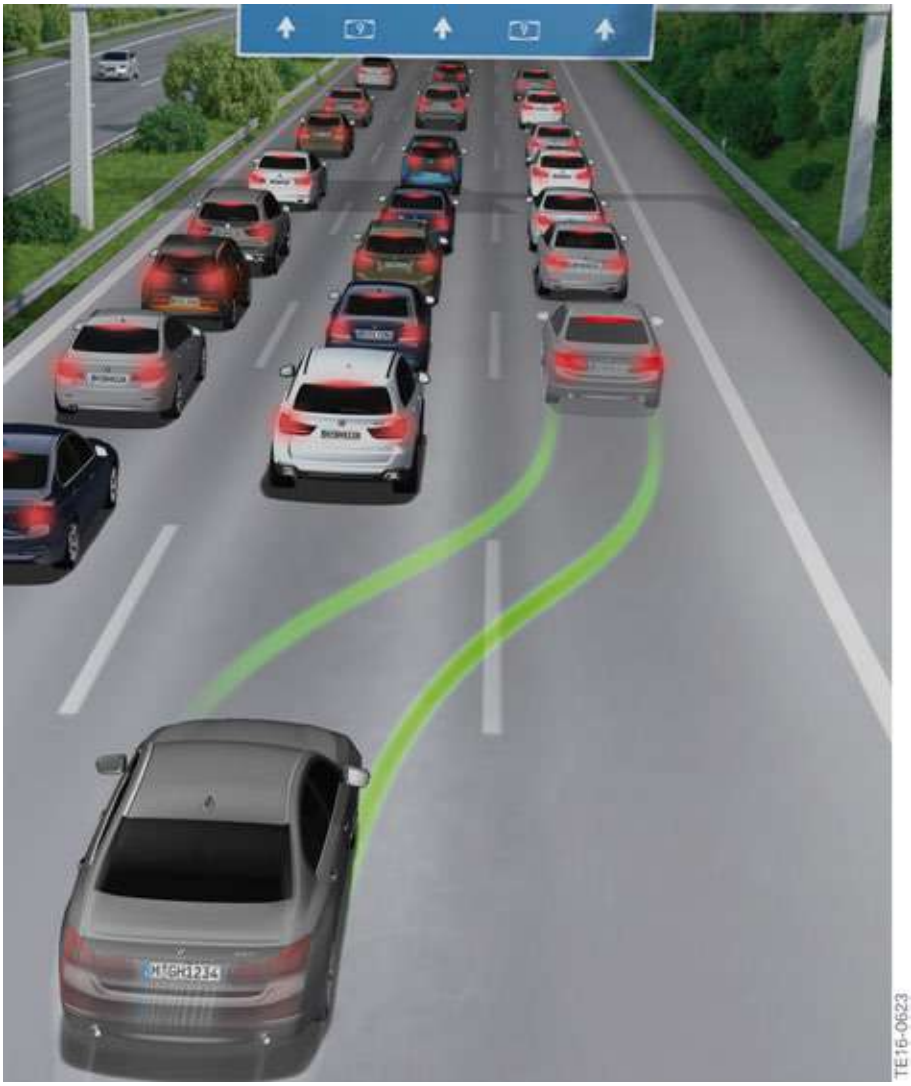

G30 Evasion Aid

The vehicle is preconditioned before an anticipated avoidance maneuver.

Here all functions that contribute to stabilize the vehicle are adapted in their configuration for the maximum support of the driver. This can reduce the risk of unstable vehicle behavior or overloading the driver in an acute avoidance maneuver.

Evasion Aid checks the current vehicle inclination and the driver's steering wheel actions and compares the information with the computed “escape track”. Should the system detect discrepancies, an appropriate steering intervention is applied to steer the vehicle to the previously estimated “escape track”.

The design objective for the system was that the driver's selected steering is not bypassed, but instead the feel of the steering wheel use is modified. The driver is supported by an additional support torque in the Electronic Power Steering (EPS) for the avoidance maneuver.

If a collision-threatening situation is detected and an acute warning has been issued, Evasion Aid evaluates the traffic situation.

cardiagn.com

26. Evasion Aid

The possible free space for an avoidance maneuver is analyzed on the basis of this critical situation. Radar sensors and the KAFAS stereo camera monitor the vehicle's surroundings. The system can intervene to provide support if an avoidance opportunity next to the vehicle in front is available and if no collision object has been detected to the side of the own vehicle.

The system assists the driver in the speed range from 25 – 100 mph (40 to 160 km/h).

The driver initiates the avoidance maneuver by turning the steering wheel rapidly, at the same time determining the avoiding direction. Any brake intervention initiated by the acute warning is aborted or suppressed as appropriate. The Electronic Power Steering (EPS) implements a supporting steering intervention.

The vehicle is made “more agile” by the system as it steers around the obstacle and then stabilized again when it reaches the escape lane.

Rapid and effective avoidance is possible thanks to the vehicle's improved response to steering commands, without endangering the general driving stability.

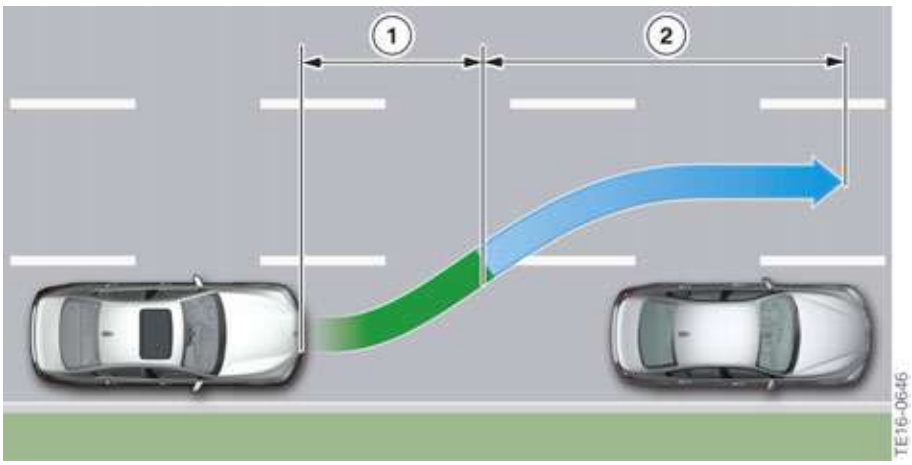

G30 Evasion Aid: make agile/stabilize

Index	Explanation
1	Make agile
2	Stabilize

The hard shoulder may be used as the escape lane, in addition to a normal lane.

The supporting steering intervention by the system is not performed until after the driver has actively initiated the avoidance maneuver. An avoidance maneuver by Evasion Aid alone is thus **not** performed. The driver must likewise determine the direction of the avoidance.

cardiagn.com

26.2. System overview

Below we describe which main components or sensors are relevant to Evasion Aid.

- Object or obstacles are detected by means of the KAFAS stereo camera and the ACC Stop&Go front radar sensor.
- The four side radar sensors monitor the area around the vehicle. The data from the KAFAS stereo camera is also analyzed and in this way a possible free space for an avoidance maneuver can be identified.
- A target trajectory (also known as a path curve), that is the “escape track” itself, is calculated in the Optional Equipment System (SAS) control unit.
- The driving dynamics function software in the Dynamic Stability Control (DSC) control unit calculates a target steering torque based on the “escape track”.
- The target steering torque is converted to an engine torque by the Electronic Power Steering (EPS), which finally results in a supporting steering intervention, if necessary.
  The maximum steering torque has been set in such a way that it can always be overruled by the driver and therefore steering past the maximum steering torque is possible.

cardiagn.com

G30 Driver Assistance Systems

26. Evasion Aid

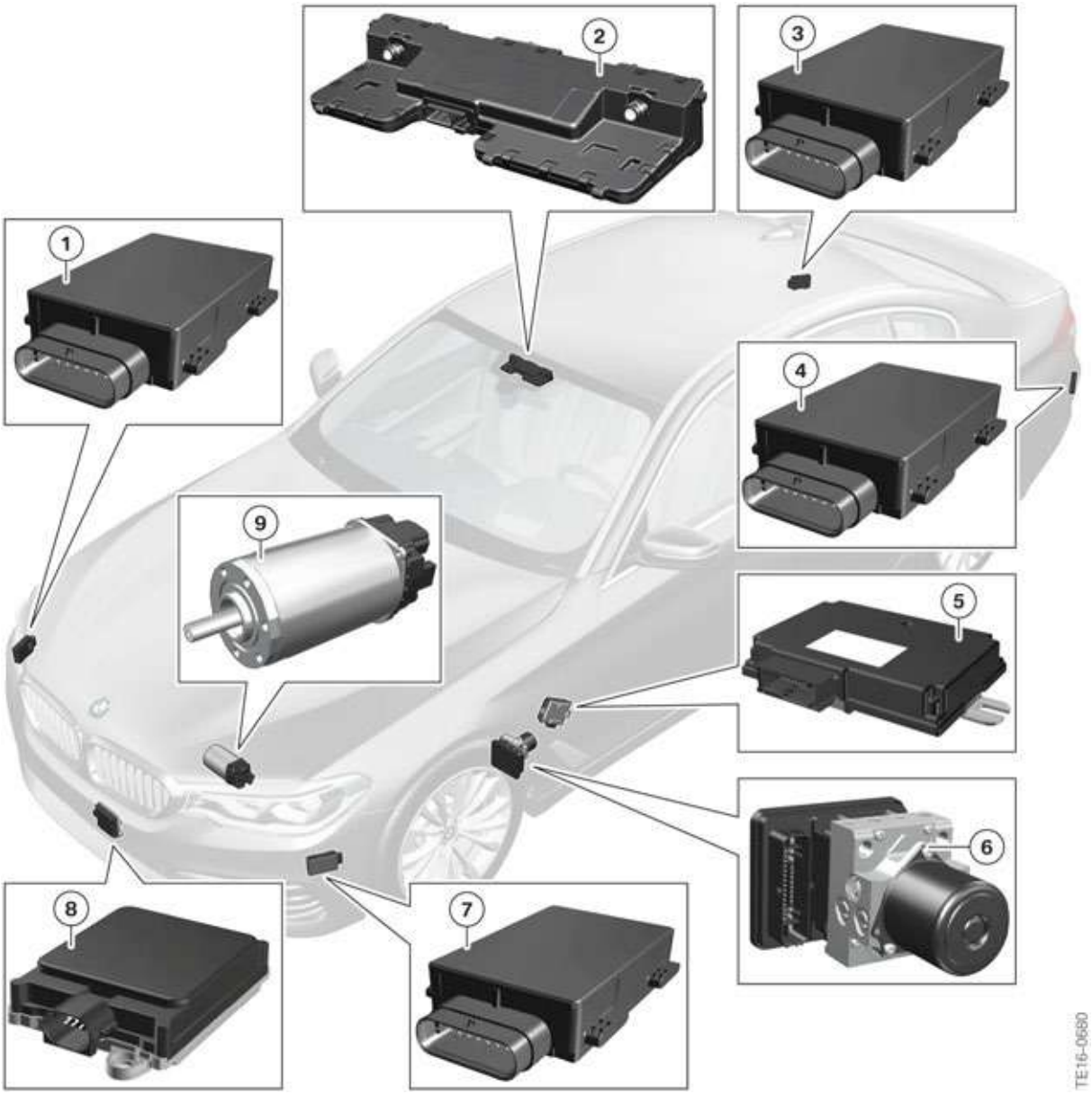

G30 Evasion Aid system overview

Index	Explanation
1	Control unit for radar sensor, right (RSR)
2	KAFAS stereo camera
3	Blind Spot Detection, right (primary)
4	Blind Spot Detection, left (secondary)
5	Optional Equipment System (SAS)

cardiagn.com

Index	Explanation
6	Dynamic Stability Control (DSC)
7	Control unit for radar sensor, left (RSL)
8	Active Cruise Control (ACC)
9	Electronic Power Steering (electromechanical power steering) (EPS)

26.3. Operation

A special precondition such as the individual configuration capability for the system or deactivation of this function only is not possible.

Evasion Aid can only be deactivated by switching off all Intelligent Safety systems (ALL OFF).

⚠

The system does not relieve the driver of personal responsibility for correctly judging the traffic situation. The driver is solely responsible for the vehicle.

26.4. Functional prerequisites

Evasion Aid is not linked to a particular road type.

The following parameters are the prerequisites for the availability of Evasion Aid:

- The vehicle's speed must not be below approximately 25 mph (40 km/h) and be no higher than approximately 100 (160 km/h).
- The system must have identified a free space for an avoidance maneuver.

Evasion Aid is generally **not** available in the following cases:

- The vehicle's speed is below approximately 25 mph (40 km/h) or higher than approximately 100 mph (160 km/h).
- During a dynamic overtaking maneuver initiated by the driver.
- If the Dynamic Stability Control has been switched off by the driver, or there is a fault in the DSC.
- When all Intelligent Safety systems are switched off.
- In the event of systemic limitations of the radar sensors or the KAFAS stereo camera.

cardiagn.com

26.5. Limits of the system

The collision warning has a limited capacity for detection. As a result, incorrect or delayed warnings may occur and consequently Evasion Aid is limited in its operation. It is also possible that the following vehicles are not detected:

- A slow vehicle when driving off at high speed.
- Vehicles that suddenly swerve or decelerate rapidly.
- Vehicles with an unusual rear view or with insufficiently visible rear lights.
- Partially concealed vehicles.
- Two-wheeled vehicles travelling ahead.

The function of the KAFAS stereo camera and the radar sensors, and thus the function of Evasion Aid may be impaired in the following situations:

- Heavy fog, rain, spray or snow.
- Insufficient light.
- Strong light in the camera lens.
- If the field of view of the KAFAS stereo camera or the windscreen is dirty.
- On sharp bends.
- Up to 10 seconds after engine start via the START-STOP button.
- On restriction or deactivation of the driving dynamics systems, for example DSC OFF.
- During the calibration process for the KAFAS stereo camera immediately after vehicle delivery or a camera change.

⚠

Evasion Aid does not release the driver from his comprehensive responsibility as the driver. There can be functional limitations because of system restrictions.

cardiagn.com

cardiagn.com

Bayerische Motorenwerke Aktiengesellschaft
Händlerqualifizierung und Training
Röntgenstraße 7
85716 Unterschleißheim, Germany