2007 Pontiac Solstice Owner Manual

Seats and Restraint Systems 7
- Front Seats 8
- Safety Belts 12
- Child Restraints 27
- Airbag System 42
- Restraint System Check 56

Features and Controls 59
- Keys 60
- Doors and Locks 65
- Windows 70
- Theft-Deterrent Systems 72
- Starting and Operating Your Vehicle 76
- Mirrors 93
- OnStar® System 94
- Storage Areas 98
- Convertible Top 99

Instrument Panel 105
- Instrument Panel Overview 108
- Climate Controls 122
- Warning Lights, Gages, and Indicators 127
- Driver Information Center (DIC) 145
- Audio System(s) 157

Driving Your Vehicle 189
- Your Driving, the Road, and Your Vehicle 190
- Towing 231

Downloaded from www.Manualslib.com manuals search engine

Service and Appearance Care 233
Service 235
Fuel 237
Checking Things Under the Hood 242
Rear Axle 279
Bulb Replacement 280
Windshield Wiper Blade Replacement 283
Tires 284
Appearance Care 314
Vehicle Identification 325
Electrical System 326
Capacities and Specifications 332

Maintenance Schedule 333
Maintenance Schedule 334

Customer Assistance Information 361
Customer Assistance and Information 362
Reporting Safety Defects 379

Index 383

Downloaded from www.Manualslib.com manuals search engine

GENERAL MOTORS, GM, the GM Emblem, PONTIAC, the PONTIAC Emblem, and the name SOLSTICE are registered trademarks of General Motors Corporation.

This manual includes the latest information at the time it was printed. We reserve the right to make changes after that time without further notice. For vehicles first sold in Canada, substitute the name “General Motors of Canada Limited” for Pontiac Division whenever it appears in this manual.

This manual describes features that may be available in this model, but your vehicle may not have all of them. For example, more than one entertainment system may be offered or your vehicle may have been ordered without a front passenger or rear seats.

Keep this manual in the vehicle, so it will be there if it is needed while you are on the road. If the vehicle is sold, leave this manual in the vehicle.

Canadian Owners

A French language copy of this manual can be obtained from your dealer or from:

Helm, Incorporated
P.O. Box 07130
Detroit, MI 48207

Litho in U.S.A.
Part No. 15859544 A First Printing

©2006 General Motors Corporation. All Rights Reserved.

Downloaded from www.Manualslib.com manuals search engine

How to Use This Manual

Many people read the owner manual from beginning to end when they first receive their new vehicle. If this is done, it can help you learn about the features and controls for the vehicle. Pictures and words work together in the owner manual to explain things.

Index

A good place to quickly locate information about the vehicle is the Index in the back of the manual. It is an alphabetical list of what is in the manual and the page number where it can be found.

Safety Warnings and Symbols

There are a number of safety cautions in this book. We use a box and the word CAUTION to tell about things that could hurt you if you were to ignore the warning.

⚠ CAUTION:

These mean there is something that could hurt you or other people.

In the caution area, we tell you what the hazard is. Then we tell you what to do to help avoid or reduce the hazard. Please read these cautions. If you do not, you or others could be hurt.

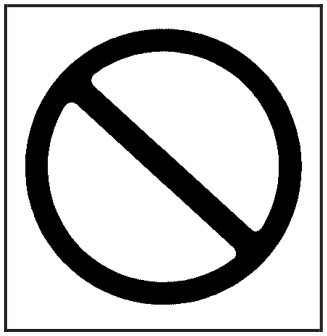

You will also find a circle with a slash through it in this book. This safety symbol means “Do Not,” “Do Not do this” or “Do Not let this happen.”

Downloaded from www.Manualslib.com manuals search engine

Vehicle Damage Warnings

Also, in this manual you will find these notices:

Notice: **These mean there is something that could damage your vehicle.**

A notice tells about something that can damage the vehicle. Many times, this damage would not be covered by your vehicle's warranty, and it could be costly. But the notice will tell what to do to help avoid the damage.

When you read other manuals, you might see CAUTION and NOTICE warnings in different colors or in different words.

There are also warning labels on the vehicle. They use the same words, CAUTION or NOTICE.

Vehicle Symbols

The vehicle has components and labels that use symbols instead of text. Symbols are shown along with the text describing the operation or information relating to a specific component, control, message, gage, or indicator.

If you need help figuring out a specific name of a component, gage, or indicator, reference the following topics:

- Seats and Restraint Systems in Section 1
- Features and Controls in Section 2
- Instrument Panel Overview in Section 3
- Climate Controls in Section 3
- Warning Lights, Gages, and Indicators in Section 3
- Audio System(s) in Section 3
- Engine Compartment Overview in Section 5

Downloaded from www.Manualslib.com manuals search engine

These are some examples of symbols that may be found on the vehicle:

CAUTION POSSIBLE INJURY	LATCH BOTH LAP AND SHOULDER BELTS TO PROTECT OCCUPANT DO NOT TWIST SAFETY BELT WHEN ATTACHING		MASTER LIGHTING SWITCH	ENGINE COOLANT TEMP	TIRE PRESSURE
PROTECT EYES BY SHIELDING	FASTEN SEAT BELTS	AIRBAG	TURN SIGNALS	BATTERY CHARGING SYSTEM	FUSE BOX ACCESS
CAUSTIC BATTERY ACID COULD CAUSE BURNS	MOVE SEAT FULLY REARWARD SECURE CHILD SEAT	DO NOT INSTALL A REAR-FACING CHILD RESTRAINT IN THIS SEATING POSITION	PARKING LAMPS	BRAKE	ENGINE COOLANT FAN
AVOID SPARKS OR FLAMES	PULL BELT OUT COMPLETELY THEN SECURE CHILD SEAT	DO NOT INSTALL A FORWARD-FACING CHILD RESTRAINT IN THIS SEATING POSITION	HAZARD WARNING FLASHER	COOLANT	FUEL
SPARK OR FLAME COULD EXPLODE BATTERY	POWER WINDOW	DOOR LOCK UNLOCK	DAYTIME RUNNING LAMPS	ENGINE OIL PRESSURE	OWNER MANUAL
			FOG LAMPS	ANTI-LOCK BRAKE SYSTEM	SERVICE MANUAL

Downloaded from www.Manualslib.com manuals search engine

Section 1 Seats and Restraint Systems

Front Seats 8
Manual Seats 8
Reclining Seatbacks 9
Seatback Latches 11
Power Lift Seat 12
Safety Belts 12
Safety Belts: They Are for Everyone 12
Questions and Answers About Safety Belts 17
How to Wear Safety Belts Properly 18
Driver Position 18
Safety Belt Use During Pregnancy 25
Passenger Position 26
Safety Belt Pretensioners 26
Safety Belt Extender 26
Child Restraints 27
Older Children 27
Infants and Young Children 30
Child Restraint Systems 33
Lower Anchors and Tethers for Children (LATCH) 37
Securing a Child Restraint in the Passenger Seat Position 38
Airbag System 42
Where Are the Airbags? 45
When Should an Airbag Inflate? 47
What Makes an Airbag Inflate? 48
How Does an Airbag Restrain? 48
What Will You See After an Airbag Inflates? 48
Passenger Sensing System 50
Servicing Your Airbag-Equipped Vehicle 54
Adding Equipment to Your Airbag-Equipped Vehicle 55
Restraint System Check 56
Checking the Restraint Systems 56
Replacing Restraint System Parts After a Crash 57

Downloaded from www.Manualslib.com manuals search engine

Front Seats

Manual Seats

⚠ CAUTION:

You can lose control of the vehicle if you try to adjust a manual driver's seat while the vehicle is moving. The sudden movement could startle and confuse you, or make you push a pedal when you do not want to. Adjust the driver's seat only when the vehicle is not moving.

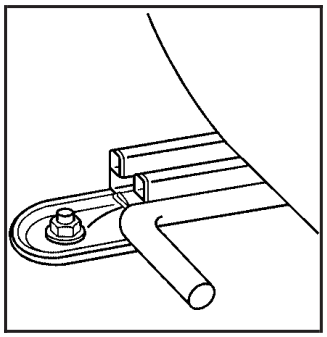

Lift the lever located under the front of the seat to unlock it.

Slide the seat to where you want it and release the lever. Try to move the seat with your body to be sure the seat is locked in place.

Make sure nothing is in front of or under the seat to prevent it from releasing or re-locking after adjustment.

Downloaded from www.Manualslib.com manuals search engine

Reclining Seatbacks

⚠ CAUTION:

You can lose control of the vehicle if you try to adjust a manual driver's seat while the vehicle is moving. The sudden movement could startle and confuse you, or make you push a pedal when you do not want to. Adjust the driver's seat only when the vehicle is not moving.

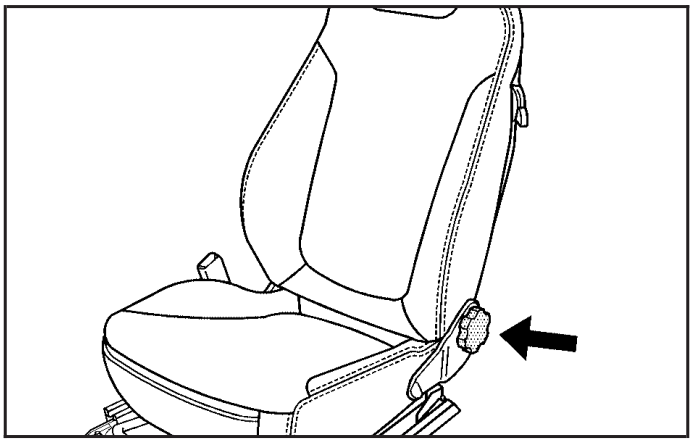

To adjust the seatback, turn the knob on the outboard side of the seatback until the seatback is in the desired position.

Downloaded from www.Manualslib.com manuals search engine

⚠ CAUTION:

Sitting in a reclined position when your vehicle is in motion can be dangerous. Even if you buckle up, your safety belts cannot do their job when you are reclined like this.

The shoulder belt cannot do its job. In a crash, you could go into it, receiving neck or other injuries.

The lap belt cannot do its job either. In a crash the belt could go up over your abdomen. The belt forces would be there, not at your pelvic bones. This could cause serious internal injuries.

For proper protection when the vehicle is in motion, have the seatback upright. Then sit well back in the seat and wear your safety belt properly.

Do not have a seatback reclined if your vehicle is moving.

Downloaded from www.Manualslib.com manuals search engine

Seatback Latches

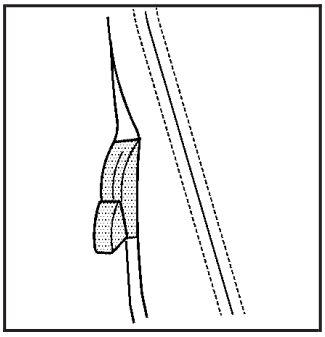

The seats have a latch located on the outboard side near the top of the seatback that enables the front seatback(s) to fold forward.

This allows access to the map pocket on the rear of the seatback.

To fold the seatback forward, lift the latch and push the seatback forward.

⚠ CAUTION:

If the seatback is not locked, it could move forward in a sudden stop or crash. That could cause injury to the person sitting there. Always push and pull on the seatback to be sure it is locked.

Downloaded from www.Manualslib.com manuals search engine

Power Lift Seat

Your vehicle may have this feature.

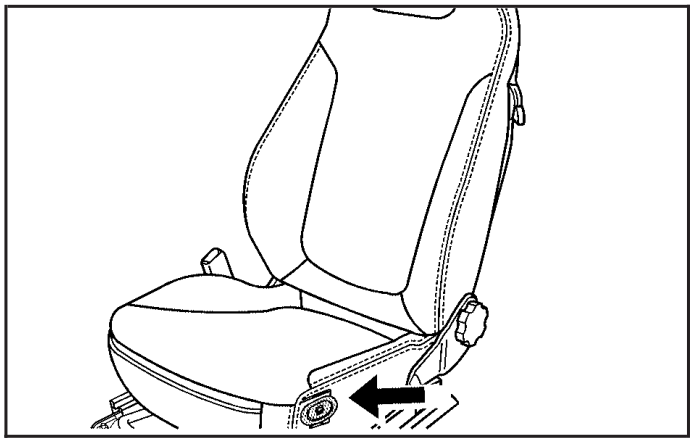

The switch is located on the outboard side of the driver's seat. To use the adjuster, first move the seat forward or rearward to where you want it. See *Manual Seats on page 8*. To raise the seat hold the switch up. To lower the seat hold the switch down.

Safety Belts

Safety Belts: They Are for Everyone

This part of the manual tells you how to use safety belts properly. It also tells you some things you should not do with safety belts.

⚠ CAUTION:

Do not let anyone ride where he or she can not wear a safety belt properly. If you are in a crash and you are not wearing a safety belt, your injuries can be much worse. You can hit things inside the vehicle or be ejected from it. You can be seriously injured or killed. In the same crash, you might not be if you are buckled up. Always fasten your safety belt, and check that your passenger's belt is fastened properly too.

Downloaded from www.Manualslib.com manuals search engine

⚠ CAUTION:

It is extremely dangerous to ride in a cargo area, inside or outside of a vehicle. In a collision, people riding in these areas are more likely to be seriously injured or killed. Do not allow people to ride in any area of your vehicle that is not equipped with seats and safety belts. Be sure everyone in your vehicle is in a seat and using a safety belt properly.

Your vehicle has indicators to remind you and your passenger to buckle your safety belts. See *Safety Belt Reminder Light on page 130* and *Passenger Safety Belt Reminder Light on page 130*.

In most states and in all Canadian provinces, the law says to wear safety belts. Here is why: *They work*.

You never know if you will be in a crash. If you do have a crash, you do not know if it will be a bad one.

A few crashes are mild, and some crashes can be so serious that even buckled up, a person would not survive. But most crashes are in between. In many of them, people who buckle up can survive and sometimes walk away. Without belts they could have been badly hurt or killed.

After more than 40 years of safety belts in vehicles, the facts are clear. In most crashes buckling up does matter... a lot!

Downloaded from www.Manualslib.com manuals search engine

Why Safety Belts Work

When you ride in or on anything, you go as fast as it goes.

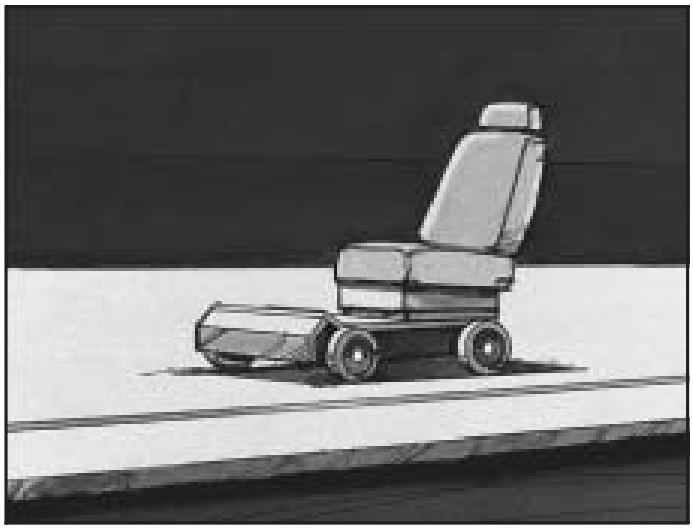

Take the simplest vehicle. Suppose it is just a seat on wheels.

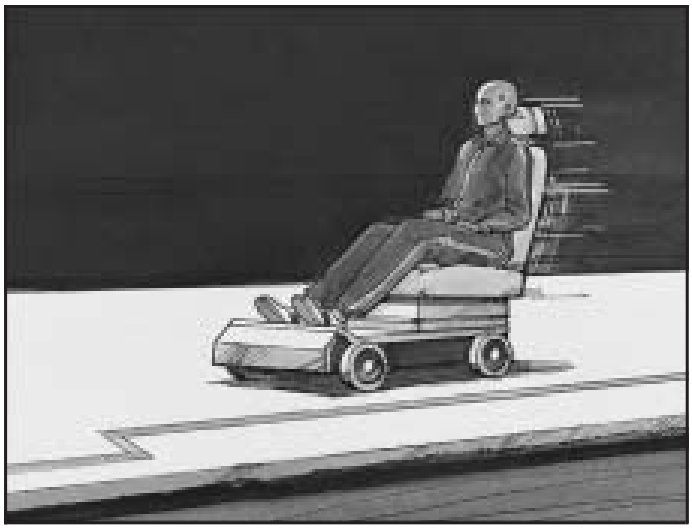

Put someone on it.

Downloaded from www.Manualslib.com manuals search engine

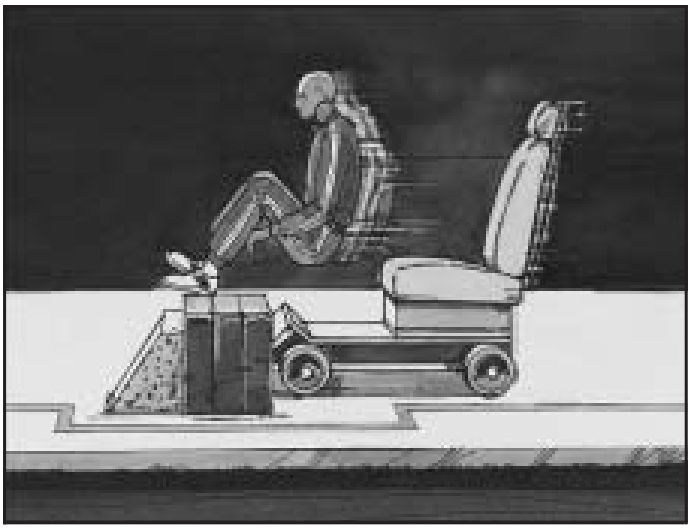

Get it up to speed. Then stop the vehicle. The rider does not stop.

The person keeps going until stopped by something. In a real vehicle, it could be the windshield...

Downloaded from www.Manualslib.com manuals search engine

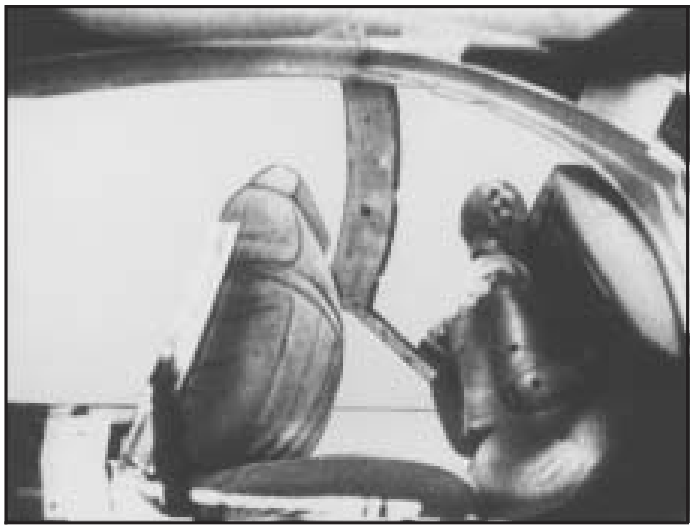

or the instrument panel...

or the safety belts!

With safety belts, you slow down as the vehicle does. You get more time to stop. You stop over more distance, and your strongest bones take the forces. That is why safety belts make such good sense.

Downloaded from www.Manualslib.com manuals search engine

Questions and Answers About Safety Belts

Q: Will I be trapped in the vehicle after an accident if I am wearing a safety belt?

A: You *could* be — whether you are wearing a safety belt or not. But you can unbuckle a safety belt, even if you are upside down. And your chance of being conscious during and after an accident, so you *can* unbuckle and get out, is *much* greater if you are belted.

Q: If my vehicle has airbags, why should I have to wear safety belts?

A: Airbags are supplemental systems only; so they work *with* safety belts — not instead of them. Every airbag system ever offered for sale has required the use of safety belts. Even if you are in a vehicle that has airbags, you still have to buckle up to get the most protection. That is true not only in frontal collisions, but especially in side and other collisions.

Q: If I am a good driver, and I never drive far from home, why should I wear safety belts?

A: You may be an excellent driver, but if you are in an accident — even one that is not your fault — you and your passenger can be hurt. Being a good driver does not protect you from things beyond your control, such as bad drivers.

Most accidents occur within 25 miles (40 km) of home. And the greatest number of serious injuries and deaths occur at speeds of less than 40 mph (65 km/h).

Safety belts are for everyone.

Downloaded from www.Manualslib.com manuals search engine

How to Wear Safety Belts Properly

This part is only for people of adult size.

Be aware that there are special things to know about safety belts and children. And there are different rules for smaller children and babies. If a child will be riding in your vehicle, see *Older Children on page 27* or *Infants and Young Children on page 30*. Follow those rules for everyone's protection.

First, you will want to know which restraint systems your vehicle has.

We will start with the driver position.

Driver Position

Lap-Shoulder Belt

The driver has a lap-shoulder belt. Here is how to wear it properly.

1. Close and lock the door.
2. Adjust the seat so you can sit up straight. To see how, see "Seats" in the Index.

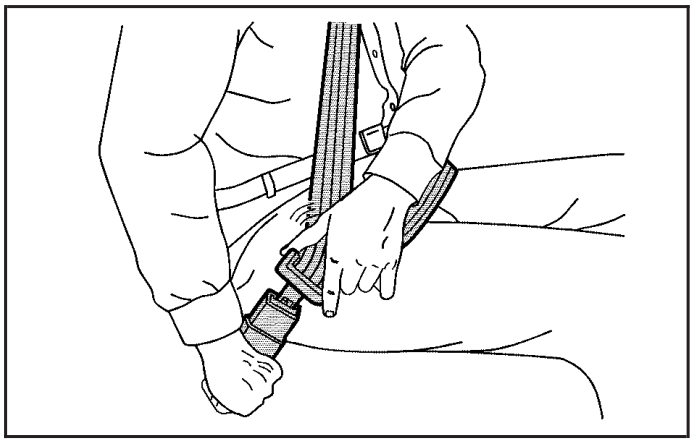

3. Pick up the latch plate and pull the belt across you. Do not let it get twisted.

   The lap-shoulder belt may lock if you pull the belt across you very quickly. If this happens, let the belt go back slightly to unlock it. Then pull the belt across you more slowly.
4. Push the latch plate into the buckle until it clicks.

   Pull up on the latch plate to make sure it is secure.

Downloaded from www.Manualslib.com manuals search engine

If the belt is not long enough, see *Safety Belt Extender on page 26*.

Make sure the release button on the buckle is positioned so you would be able to unbuckle the safety belt quickly if you ever had to.

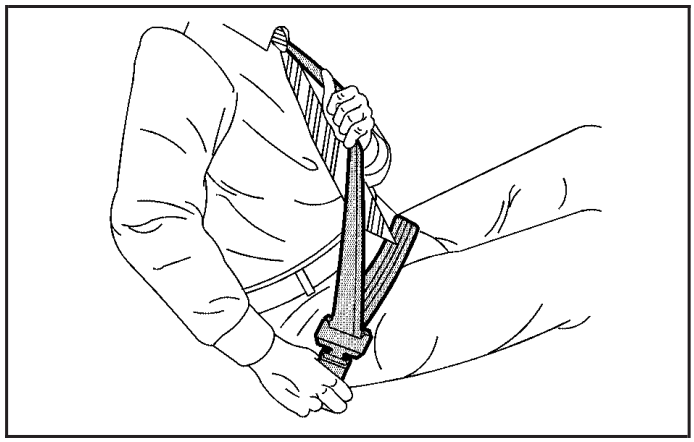

5. To make the lap part tight, pull up on the shoulder belt.

   It may be necessary to pull stitching on the safety belt through the latch plate to fully tighten the lap belt on smaller occupants.

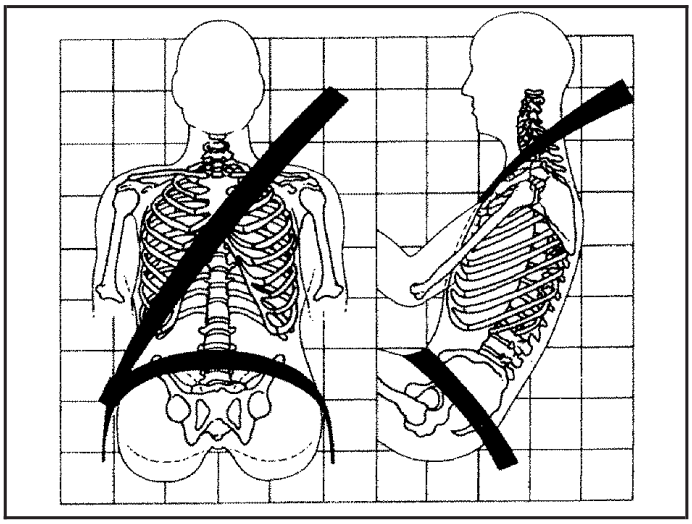

The lap part of the belt should be worn low and snug on the hips, just touching the thighs. In a crash, this applies force to the strong pelvic bones. And you would be less likely to slide under the lap belt. If you slid under it, the belt would apply force at your abdomen. This could cause serious or even fatal injuries. The shoulder belt should go over the shoulder and across the chest. These parts of the body are best able to take belt restraining forces.

The safety belt locks if there is a sudden stop or crash.

Downloaded from www.Manualslib.com manuals search engine

Q: What is wrong with this?

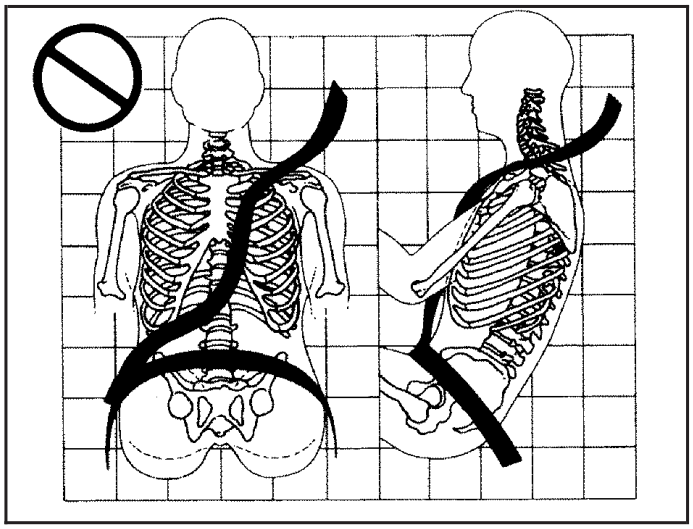

A: The shoulder belt is too loose. It will not give nearly as much protection this way.

⚠ CAUTION:

You can be seriously hurt if your shoulder belt is too loose. In a crash, you would move forward too much, which could increase injury. The shoulder belt should fit against your body.

Downloaded from www.Manualslib.com manuals search engine

Q: What is wrong with this?

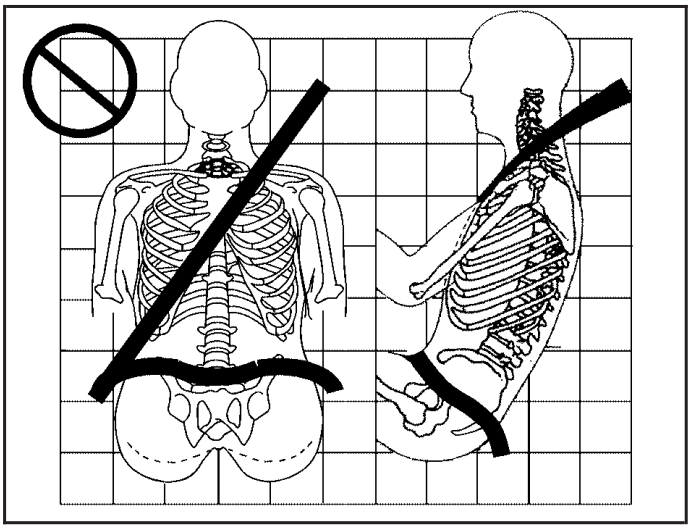

A: The lap belt is too loose. It will not give nearly as much protection this way.

⚠ CAUTION:

You can be seriously hurt if your lap belt is too loose. In a crash, you could slide under the lap belt and apply force at your abdomen. This could cause serious or even fatal injuries. The lap belt should be worn low and snug on the hips, just touching the thighs.

Downloaded from www.Manualslib.com manuals search engine

Q: What is wrong with this?

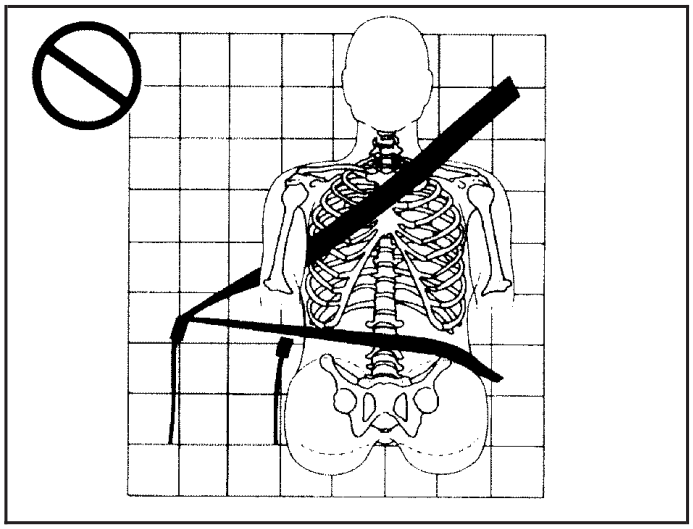

A: The belt is buckled in the wrong place.

⚠ CAUTION:

You can be seriously injured if your belt is buckled in the wrong place like this. In a crash, the belt would go up over your abdomen. The belt forces would be there, not at the pelvic bones. This could cause serious internal injuries. Always buckle your belt into the buckle nearest you.

Downloaded from www.Manualslib.com manuals search engine

Q: What is wrong with this?

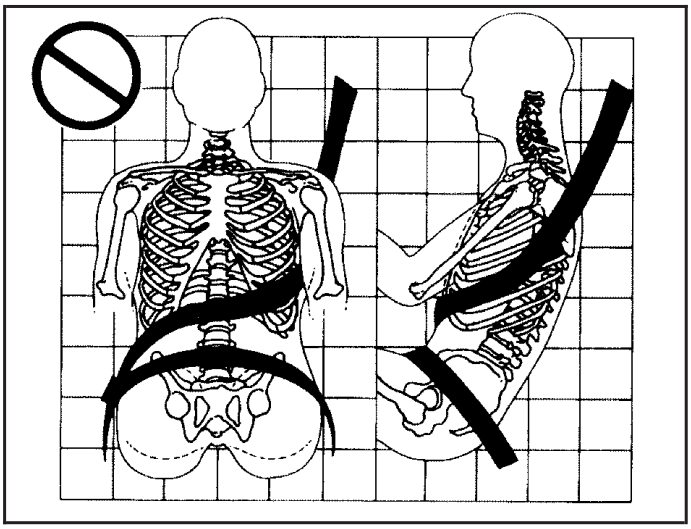

A: The shoulder belt is worn under the arm.
It should be worn over the shoulder at all times.

⚠ CAUTION:

You can be seriously injured if you wear the shoulder belt under your arm. In a crash, your body would move too far forward, which would increase the chance of head and neck injury. Also, the belt would apply too much force to the ribs, which are not as strong as shoulder bones. You could also severely injure internal organs like your liver or spleen.

Downloaded from www.Manualslib.com manuals search engine

Q: What is wrong with this?

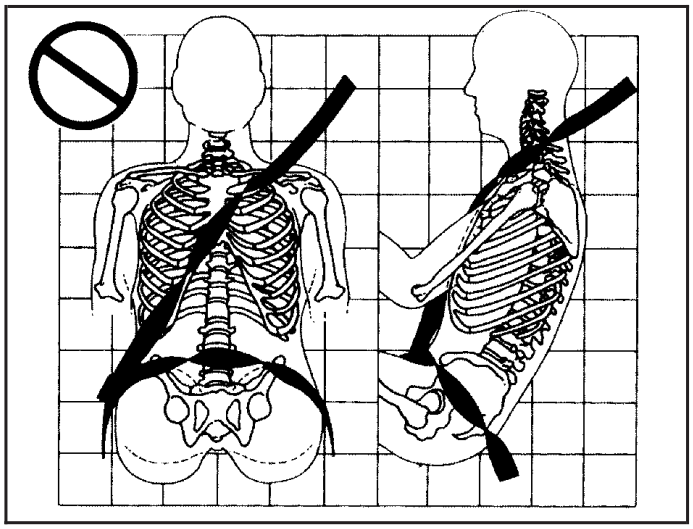

A: The belt is twisted across the body.

⚠ CAUTION:

You can be seriously injured by a twisted belt. In a crash, you would not have the full width of the belt to spread impact forces. If a belt is twisted, make it straight so it can work properly, or ask your dealer to fix it.

Downloaded from www.Manualslib.com manuals search engine

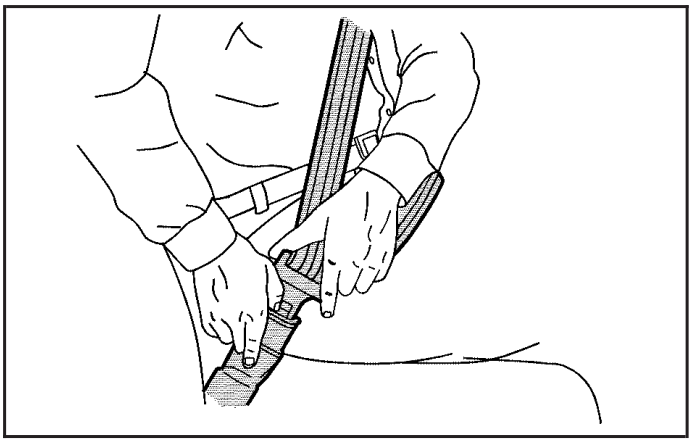

To unlatch the belt, push the button on the buckle. The belt should go back out of the way.

Before you close the door, be sure the belt is out of the way. If you slam the door on it, you can damage both the belt and your vehicle.

Safety Belt Use During Pregnancy

Safety belts work for everyone, including pregnant women. Like all occupants, they are more likely to be seriously injured if they do not wear safety belts.

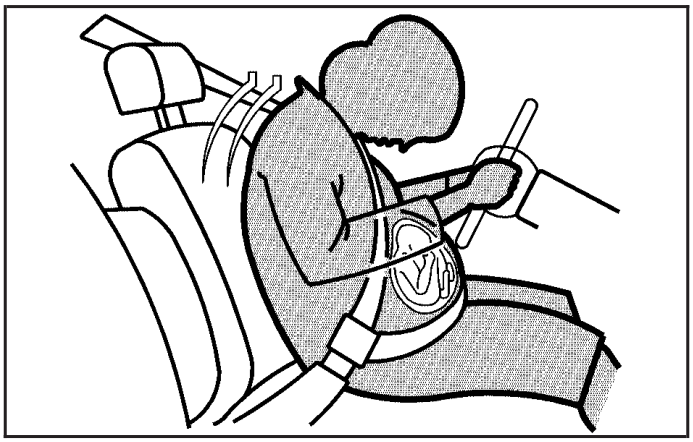

A pregnant woman should wear a lap-shoulder belt, and the lap portion should be worn as low as possible, below the rounding, throughout the pregnancy.

The best way to protect the fetus is to protect the mother. When a safety belt is worn properly, it is more likely that the fetus will not be hurt in a crash. For pregnant women, as for anyone, the key to making safety belts effective is wearing them properly.

Downloaded from www.Manualslib.com manuals search engine

Passenger Position

To learn how to wear the passenger's safety belt properly, see *Driver Position on page 18*.

The passenger's safety belt works the same way as the driver's safety belt — except for one thing. If you ever pull the shoulder portion of the belt out all the way, you will engage the child restraint locking feature. If this happens, just let the belt go back all the way and start again.

Safety Belt Pretensioners

Your vehicle has safety belt pretensioners for the driver and right front passenger. Although you cannot see them, they are part of the safety belt assembly. They help tighten the safety belts during the early stages of a moderate to severe frontal or near frontal crash if the threshold conditions for pretensioner activation are met.

Pretensioners work only once. If they activate in a crash, you will need to get new ones, and probably other new parts for your safety belt system. See *Replacing Restraint System Parts After a Crash on page 57*.

Safety Belt Extender

If the vehicle's safety belt will fasten around you, you should use it.

But if a safety belt is not long enough, your dealer will order you an extender. When you go in to order it, take the heaviest coat you will wear, so the extender will be long enough for you. To help avoid personal injury, do not let someone else use it, and use it only for the seat it is made to fit. The extender has been designed for adults. Never use it for securing child seats. To wear it, just attach it to the regular safety belt. For more information see the instruction sheet that comes with the extender.

Downloaded from www.Manualslib.com manuals search engine

Child Restraints

Older Children

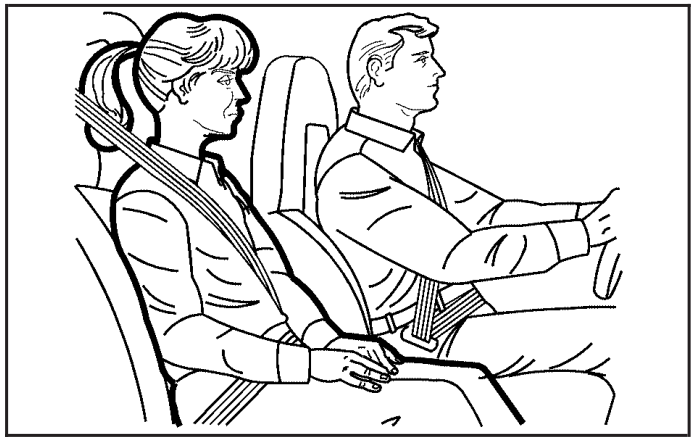

Older children who have outgrown booster seats should wear the vehicle's safety belts.

Q: What is the proper way to wear safety belts?

A: If possible, an older child should wear a lap-shoulder belt and get the additional restraint a shoulder belt can provide. The shoulder belt should not cross the face or neck. The lap belt should fit snugly below the hips, just touching the top of the thighs. It should never be worn over the abdomen, which could cause severe or even fatal internal injuries in a crash.

According to accident statistics, children are safer when properly restrained in the rear seating positions than in the front seating positions.

In a crash, children who are not buckled up can strike other people who are buckled up, or can be thrown out of the vehicle. Older children need to use safety belts properly.

Downloaded from www.Manualslib.com manuals search engine

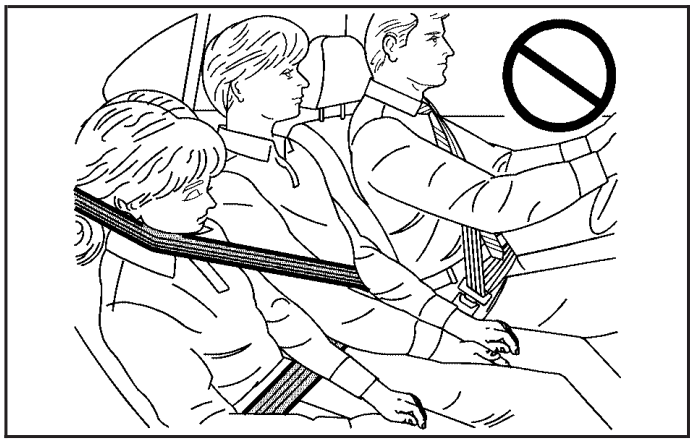

⚠ CAUTION:

Never do this.

Here two children are wearing the same belt. The belt can not properly spread the impact forces. In a crash, the two children can be crushed together and seriously injured. A belt must be used by only one person at a time.

Q: What if a child is wearing a lap-shoulder belt, but the child is so small that the shoulder belt is very close to the child's face or neck?

A: Move the child toward the center of the vehicle, but be sure that the shoulder belt still is on the child's shoulder, so that in a crash the child's upper body would have the restraint that belts provide.

Downloaded from www.Manualslib.com manuals search engine

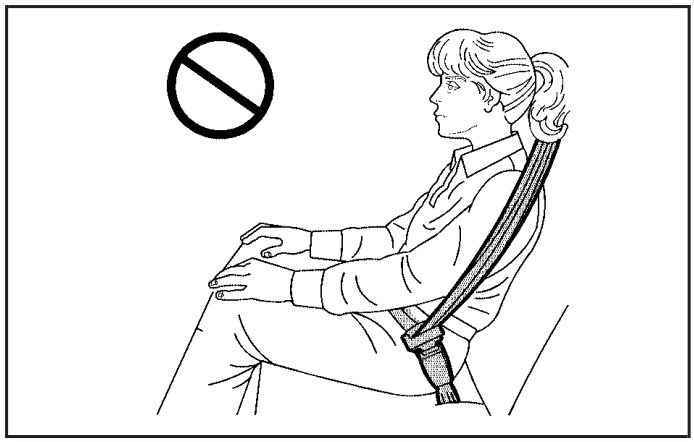

⚠ CAUTION:

Never do this.

Here a child is sitting in a seat that has a lap-shoulder belt, but the shoulder part is behind the child. If the child wears the belt in this way, in a crash the child might slide under the belt. The belt's force would then be applied right on the child's abdomen. That could cause serious or fatal injuries.

The lap portion of the belt should be worn low and snug on the hips, just touching the child's thighs. This applies belt force to the child's pelvic bones in a crash.

Downloaded from www.Manualslib.com manuals search engine

Infants and Young Children

Everyone in a vehicle needs protection! This includes infants and all other children. Neither the distance traveled nor the age and size of the traveler changes the need, for everyone, to use safety restraints. In fact, the law in every state in the United States and in every Canadian province says children up to some age must be restrained while in a vehicle.

⚠ CAUTION:

Children can be seriously injured or strangled if a shoulder belt is wrapped around their neck and the safety belt continues to tighten. Never leave children unattended in a vehicle and never allow children to play with the safety belts.

Every time infants and young children ride in vehicles, they should have the protection provided by appropriate restraints. Young children should not use the vehicle's adult safety belts alone, unless there is no other choice. Instead, they need to use a child restraint.

⚠ CAUTION:

People should never hold a baby in their arms while riding in a vehicle. A baby does not weigh much — until a crash. During a crash a baby will become so heavy it is not possible to hold it. For example, in a crash at only 25 mph (40 km/h), a 12 lb (5.5 kg) baby will suddenly become a 240 lb (110 kg) force on a person's arms. A baby should be secured in an appropriate restraint.

Downloaded from www.Manualslib.com manuals search engine

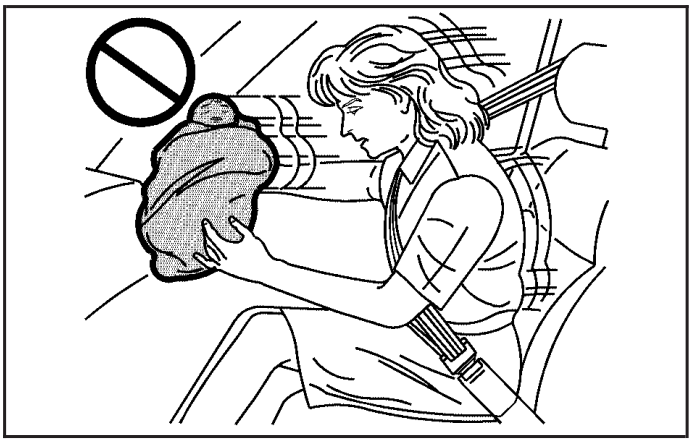

⚠ CAUTION:

Children who are up against, or very close to, any airbag when it inflates can be seriously injured or killed. Airbags plus lap-shoulder belts offer protection for adults and older children, but not for young children and infants. Neither the vehicle's safety belt system nor its airbag system is designed for them. Young children and infants need the protection that a child restraint system can provide.

Downloaded from www.Manualslib.com manuals search engine

Q: What are the different types of add-on child restraints?

A: Add-on child restraints, which are purchased by the vehicle's owner, are available in four basic types. Selection of a particular restraint should take into consideration not only the child's weight, height, and age but also whether or not the restraint will be compatible with the motor vehicle in which it will be used.

For most basic types of child restraints, there are many different models available. When purchasing a child restraint, be sure it is designed to be used in a motor vehicle. If it is, the restraint will have a label saying that it meets federal motor vehicle safety standards.

The restraint manufacturer's instructions that come with the restraint state the weight and height limitations for a particular child restraint. In addition, there are many kinds of restraints available for children with special needs.

⚠ CAUTION:

Newborn infants need complete support, including support for the head and neck. This is necessary because a newborn infant's neck is weak and its head weighs so much compared with the rest of its body. In a crash, an infant in a rear-facing seat settles into the restraint, so the crash forces can be distributed across the strongest part of an infant's body, the back and shoulders. Infants always should be secured in appropriate infant restraints.

Downloaded from www.Manualslib.com manuals search engine

⚠ CAUTION:

The body structure of a young child is quite unlike that of an adult or older child, for whom the safety belts are designed. A young child's hip bones are still so small that the vehicle's regular safety belt may not remain low on the hip bones, as it should. Instead, it may settle up around the child's abdomen. In a crash, the belt would apply force on a body area that is unprotected by any bony structure. This alone could cause serious or fatal injuries. Young children always should be secured in appropriate child restraints.

Child Restraint Systems

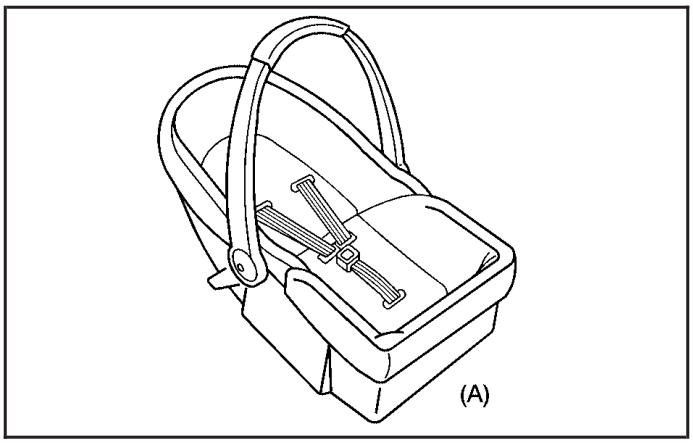

An infant car bed (A), a special bed made for use in a motor vehicle, is an infant restraint system designed to restrain or position a child on a continuous flat surface. Make sure that the infant's head rests toward the center of the vehicle.

Downloaded from www.Manualslib.com manuals search engine

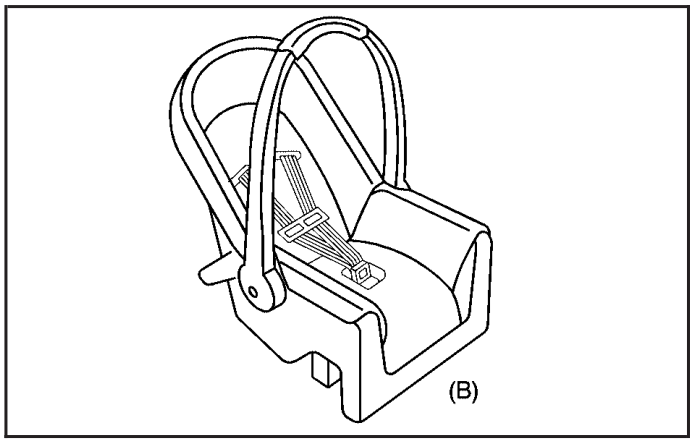

A rear-facing infant seat (B) provides restraint with the seating surface against the back of the infant. The harness system holds the infant in place and, in a crash, acts to keep the infant positioned in the restraint.

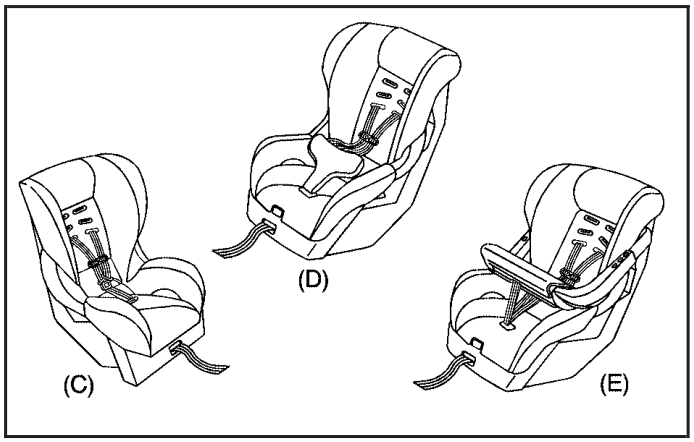

A forward-facing child seat (C-E) provides restraint for the child's body with the harness and also sometimes with surfaces such as T-shaped or shelf-like shields.

Downloaded from www.Manualslib.com manuals search engine

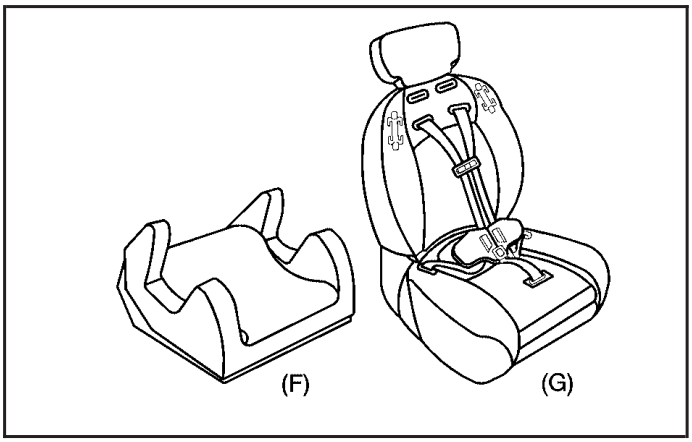

A booster seat (F-G) is a child restraint designed to improve the fit of the vehicle's safety belt system. Some booster seats have a shoulder belt positioner, and some high-back booster seats have a five-point harness. A booster seat can also help a child to see out the window.

Q: How Should I Use a Child Restraint?

A: A child restraint system is any device designed for use in a motor vehicle to restrain, seat, or position children. A built-in child restraint system is a permanent part of the motor vehicle. An add-on child restraint system is a portable one, which is purchased by the vehicle's owner. To help reduce injuries, an add-on child restraint must be secured in the vehicle. With built-in or add-on child restraints, the child has to be secured within the child restraint.

When choosing an add-on child restraint, be sure the child restraint is designed to be used in a vehicle. If it is, it will have a label saying that it meets federal motor vehicle safety standards. Then follow the instructions for the restraint. You may find these instructions on the restraint itself or in a booklet, or both.

Downloaded from www.Manualslib.com manuals search engine

Securing an Add-on Child Restraint in the Vehicle

⚠ CAUTION:

A child can be seriously injured or killed in a crash if the child restraint is not properly secured in the vehicle. Make sure the child restraint is properly installed in the vehicle using the vehicle's safety belt, following the instructions that came with that restraint, and also the instructions in this manual.

To help reduce the chance of injury, the child restraint must be secured in the vehicle. Child restraint systems must be secured in vehicle seats by lap belts or the lap belt portion of a lap-shoulder belt. A child can be endangered in a crash if the child restraint is not properly secured in the vehicle.

When securing an add-on child restraint, refer to the instructions that come with the restraint which may be on the restraint itself or in a booklet, or both, and to this manual. The child restraint instructions are important, so if they are not available, obtain a replacement copy from the manufacturer.

Keep in mind that an unsecured child restraint can move around in a collision or sudden stop and injure people in the vehicle. Be sure to properly secure any child restraint in your vehicle — even when no child is in it.

Securing the Child Within the Child Restraint

There are several systems for securing the child within the child restraint. One system, the three-point harness, has straps that come down over each of the infant's shoulders and buckle together at the crotch. The five-point harness system has two shoulder straps, two hip straps, and a crotch strap. A shield may take the place of hip straps.

Downloaded from www.Manualslib.com manuals search engine

A T-shaped shield has shoulder straps that are attached to a flat pad which rests low against the child's body. A shelf- or armrest-type shield has straps that are attached to a wide, shelf-like shield that swings up or to the side.

⚠ CAUTION:

A child can be seriously injured or killed in a crash if the child is not properly secured in the child restraint. Make sure the child is properly secured, following the instructions that came with that restraint.

Because there are different systems, it is important to refer to the instructions that come with the restraint. A child can be endangered in a crash if the child is not properly secured in the child restraint.

Lower Anchors and Tethers for Children (LATCH)

Some child restraints have a LATCH system. As part of the LATCH system, your child restraint may have lower attachments and/or a top tether. The LATCH system can help hold the child restraint in place during driving or in a crash. Some vehicles have lower and/or top tether anchors designed to secure a child restraint with lower attachments and/or a top tether.

Some child restraints with a top tether are designed to be used whether the top tether is anchored or not. Other child restraints require that the top tether be anchored. A national or local law may require that the top tether be anchored.

In Canada, the law requires that forward-facing child restraints have a top tether, and that the tether be attached.

Downloaded from www.Manualslib.com manuals search engine

Your vehicle does not have lower anchors or top tether anchors to secure a child restraint with the LATCH system. If a national or local law requires that your top tether be anchored, do not use a child restraint in this vehicle because a top tether cannot be properly anchored. You must use the safety belts to secure your child restraint in this vehicle, unless a national or local law requires that the top tether be anchored. Refer to your child restraint instructions and instructions in this manual for securing a child restraint using the vehicle's safety belts.

Securing a Child Restraint in the Passenger Seat Position

Your vehicle has a passenger's airbag. A rear seat is a safer place to secure a forward-facing child restraint.

In addition, your vehicle has the passenger sensing system. The passenger sensing system is designed to turn off the passenger's frontal airbag when an infant in a rear-facing infant seat or a small child in a forward-facing child restraint or booster seat is detected. See *Passenger Sensing System on page 50* and *Passenger Airbag Status Indicator on page 132* for more information on this including important safety information.

Downloaded from www.Manualslib.com manuals search engine

⚠ CAUTION:

A child in a rear-facing child restraint can be seriously injured or killed if the right front passenger's airbag inflates. This is because the back of the rear facing child restraint would be very close to the inflating airbag. Be sure the airbag is off before using a rear-facing child restraint in the passenger's position.

Even though the passenger sensing system is designed to turn off the passenger's frontal airbag if the system detects a rear-facing child restraint, no system is fail-safe, and no one can guarantee that an airbag will not deploy under some unusual circumstance, even though it is turned off.

CAUTION: (Continued)

CAUTION: (Continued)

We recommend that rear-facing child restraints be transported in vehicles with a rear seat that will accommodate a rear-facing child restraint, whenever possible.

There is no top strap anchor in your vehicle. Do not secure a child seat in your vehicle if a national or local law requires that the top strap be anchored, or if the instructions that come with the child restraint say that the top strap must be anchored. See *Lower Anchors and Tethers for Children (LATCH) on page 37* for more information.

If you need to secure a forward-facing child restraint in the passenger's position, move the seat as far back as it will go before securing the forward-facing child restraint. See *Manual Seats on page 8*.

Downloaded from www.Manualslib.com manuals search engine

You will be using the lap-shoulder belt to secure the child restraint in this position. Be sure to follow the instructions that came with the child restraint. Secure the child in the child restraint when and as the instructions say.

1. Your vehicle has a passenger's frontal airbag. See *Passenger Sensing System on page 50*. We recommend that rear-facing child restraints not be transported in your vehicle, even if the airbag is off. If your child restraint is forward-facing, move the seat as far back as it will go before securing the child restraint in this seat. See *Manual Seats on page 8*.

   When the passenger sensing system has turned off the passenger's frontal airbag, the off indicator in the passenger airbag status indicator should light and stay lit when the vehicle is started. See *Passenger Airbag Status Indicator on page 132*.

2. Put the child restraint on the seat.
3. Pick up the latch plate, and run the lap and shoulder portions of the vehicle's safety belt through or around the restraint. The child restraint instructions will show you how.

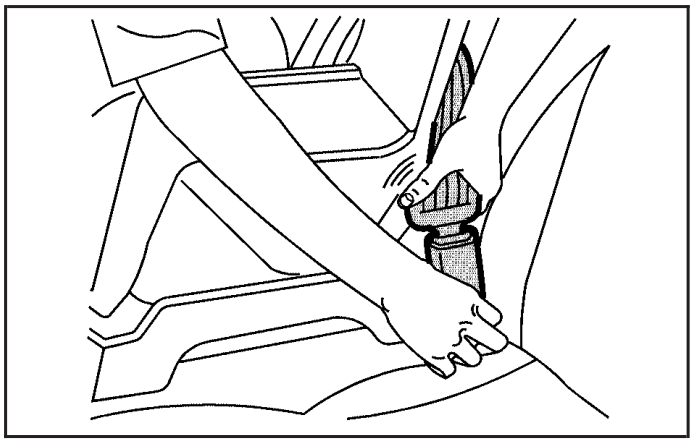

4. Buckle the belt. Make sure the release button is positioned so you would be able to unbuckle the safety belt quickly if you ever had to.

Downloaded from www.Manualslib.com manuals search engine

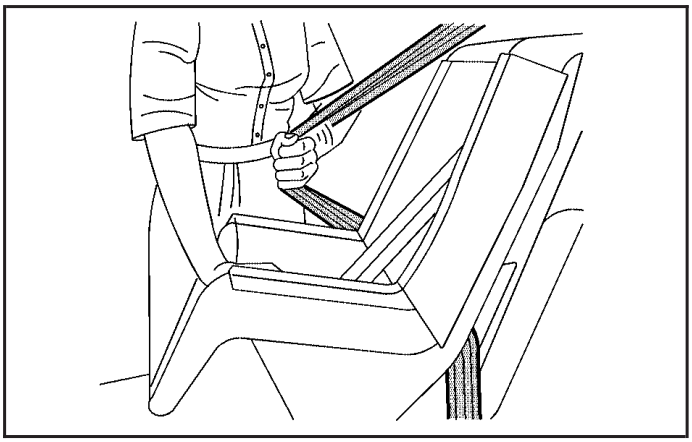

5. Pull the rest of the shoulder belt all the way out of the retractor to set the lock.

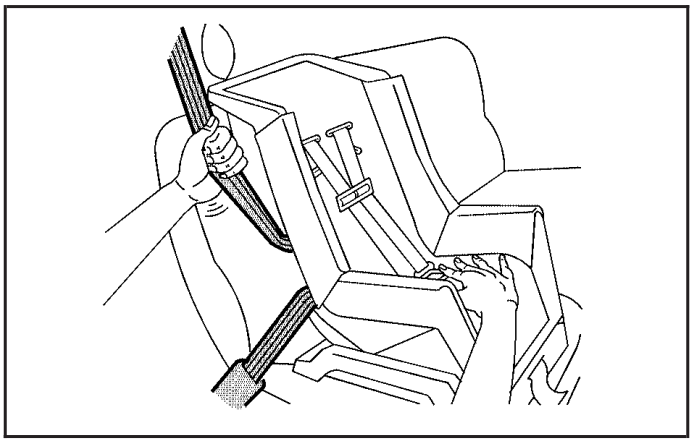

6. To tighten the belt, push down on the child restraint, pull the shoulder portion of the belt to tighten the lap portion of the belt, and feed the shoulder belt back into the retractor. If you are using a forward-facing child restraint, you may find it helpful to use your knee to push down on the child restraint as you tighten the belt. You should not be able to pull more of the belt from the retractor once the lock has been set.

Downloaded from www.Manualslib.com manuals search engine

7. Push and pull the child restraint in different directions to be sure it is secure.
8. If the airbag is off, the off indicator on the instrument panel will be lit and stay lit when the vehicle is started.

If a child restraint has been installed and the on indicator is lit, turn the vehicle off. Remove the child restraint from the vehicle and reinstall the child restraint.

If, after reinstalling the child restraint and restarting the vehicle, the on indicator is still lit, check to make sure that the vehicle's seatback is not pressing the child restraint into the seat cushion. If this happens, slightly recline the vehicle's seatback and adjust the seat cushion if possible.

A thick layer of additional material such as a blanket, or aftermarket equipment such as seat covers, seat heaters and seat massagers, located between the seat cushion and the child restraint or small occupant, can affect how the passenger sensing system operates.

Remove any additional material from the seat cushion before reinstalling or securing the child restraint and before a small occupant, including a small adult, sits in the passenger position.

If the on indicator is still lit, do not install a child restraint in this vehicle and check with your dealer.

To remove the child restraint, just unbuckle the vehicle's safety belt and let it go back all the way. The safety belt will move freely again and be ready to work for an adult or larger child passenger.

Airbag System

Your vehicle has an airbag for the driver and an airbag for the right front passenger.

Airbags are designed to supplement the protection provided by safety belts. Even though today's airbags are also designed to help reduce the risk of injury from the force of an inflating bag, all airbags must inflate very quickly to do their job.

Downloaded from www.Manualslib.com manuals search engine

Here are the most important things to know about the airbag system:

⚠ CAUTION:

You can be severely injured or killed in a crash if you are not wearing your safety belt — even if you have airbags. Wearing your safety belt during a crash helps reduce your chance of hitting things inside the vehicle or being ejected from it. Airbags are "supplemental restraints" to the safety belts. All airbags are designed to work with safety belts, but do not replace them.

⚠ CAUTION:

Airbags are designed to deploy in moderate to severe frontal and near frontal crashes. They are not designed to inflate in rollover, rear crashes, or in many side crashes. And, for some unrestrained occupants, airbags may provide less protection in frontal crashes than more forceful airbags have provided in the past. Everyone in your vehicle should wear a safety belt properly — whether or not there is an airbag for that person.

Downloaded from www.Manualslib.com manuals search engine

⚠ CAUTION:

Airbags inflate with great force, faster than the blink of an eye. If you are too close to an inflating airbag, as you would be if you were leaning forward, it could seriously injure you. Safety belts help keep you in position before and during a crash. Always wear your safety belt, even with airbags. The driver should sit as far back as possible while still maintaining control of the vehicle.

⚠ CAUTION:

Anyone who is up against, or very close to, any airbag when it inflates can be seriously injured or killed. Airbags plus lap-shoulder belts offer the best protection for adults, but not for young children and infants. Neither the vehicle's safety belt system nor its airbag system is designed for them. Young children and infants need the protection that a child restraint system can provide. Always secure children properly in your vehicle. To read how, see *Older Children on page 27* and *Infants and Young Children on page 30*.

Downloaded from www.Manualslib.com manuals search engine

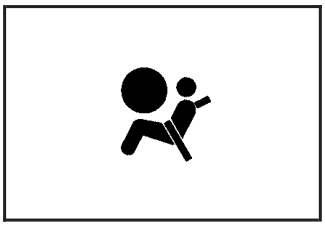

There is an airbag readiness light on the instrument panel cluster, which shows the airbag symbol.

The system checks the airbag electrical system for malfunctions. The light tells you if there is an electrical problem. See *Airbag Readiness Light on page 131* for more information.

Where Are the Airbags?

The driver's airbag is in the middle of the steering wheel.

Downloaded from www.Manualslib.com manuals search engine

The right front passenger's airbag is in the instrument panel on the passenger's side.

⚠ CAUTION:

If something is between an occupant and an airbag, the bag might not inflate properly or it might force the object into that person causing severe injury or even death. The path of an inflating airbag must be kept clear. Do not put anything between an occupant and an airbag, and do not attach or put anything on the steering wheel hub or on or near any other airbag covering.

Downloaded from www.Manualslib.com manuals search engine

When Should an Airbag Inflate?

Airbags are designed to inflate in moderate to severe frontal or near-frontal crashes. But they are designed to inflate only if the impact exceeds a predetermined deployment threshold. Deployment thresholds take into account a variety of desired deployment and non-deployment events and are used to predict how severe a crash is likely to be in time for the airbags to inflate and help restrain the occupants. Whether your frontal airbags will or should deploy is not based on how fast your vehicle is traveling. It depends largely on what you hit, the direction of the impact, and how quickly your vehicle slows down.

In addition, your vehicle has “dual stage” frontal airbags, which adjust the restraint according to crash severity. Your vehicle has electronic frontal sensors, which help the sensing system distinguish between a moderate frontal impact and a more severe frontal impact. For moderate frontal impacts, these airbags inflate at a level less than full deployment. For more severe frontal impacts, full deployment occurs.

If the front of your vehicle goes straight into a wall that does not move or deform, the threshold level for the reduced deployment is about 12 to 16 mph (19 to 26 km/h), and the threshold level for a full deployment is about 18 to 22 mph (28.9 to 35.4 km/h). The threshold level can vary, however, with specific vehicle design, so that it can be somewhat above or below this range.

Frontal airbags may inflate at different crash speeds. For example:

- If the vehicle hits a stationary object, the airbags could inflate at a different crash speed than if the vehicle hits a moving object.
- If the vehicle hits an object that deforms, the airbags could inflate at a different crash speed than if the vehicle hits an object that does not deform.
- If the vehicle hits a narrow object (like a pole), the airbags could inflate at a different crash speed than if the vehicle hits a wide object (like a wall).
- If the vehicle goes into an object at an angle, the airbags could inflate at a different crash speed than if the vehicle goes straight into the object.

Downloaded from www.Manualslib.com manuals search engine

Frontal airbags are not intended to inflate during vehicle rollovers, rear impacts, or in many side impacts.

In any particular crash, no one can say whether an airbag should have inflated simply because of the damage to a vehicle or because of what the repair costs were. Inflation is determined by what the vehicle hits, the angle of the impact, and how quickly the vehicle slows down.

What Makes an Airbag Inflate?

In an impact of sufficient severity, the airbag sensing system detects that the vehicle is in a crash. The sensing system triggers a release of gas from the inflator, which inflates the airbag. The inflator, airbag, and related hardware are all part of the airbag modules inside the steering wheel and in the instrument panel in front of the right front passenger.

How Does an Airbag Restrain?

In moderate to severe frontal or near-frontal collisions, even belted occupants can contact the steering wheel or the instrument panel. The airbag supplements the protection provided by safety belts. Airbags distribute the force of the impact more evenly over the occupant's upper body, stopping the occupant more gradually. But airbags would not help you in many types of collisions, including rollovers, rear impacts, and many side impacts, primarily because an occupant's motion is not toward those airbags.

Airbags should never be regarded as anything more than a supplement to safety belts, and then only in moderate to severe frontal or near-frontal collisions.

What Will You See After an Airbag Inflates?

After an airbag inflates, it quickly deflates, so quickly that some people may not even realize the airbag inflated. Some components of the airbag module — the steering wheel hub for the driver's airbag or the instrument panel for the right front passenger's bag — may be hot for a short time.

Downloaded from www.Manualslib.com manuals search engine

The parts of the airbag that come into contact with you may be warm, but not too hot to touch. There may be some smoke and dust coming from the vents in the deflated airbags. Airbag inflation does not prevent the driver from seeing out of the windshield or being able to steer the vehicle, nor does it prevent people from leaving the vehicle.

⚠ CAUTION:

When an airbag inflates, there may be dust in the air. This dust could cause breathing problems for people with a history of asthma or other breathing trouble. To avoid this, everyone in the vehicle should get out as soon as it is safe to do so. If you have breathing problems but cannot get out of the vehicle after an airbag inflates, then get fresh air by opening a window or a door. If you experience breathing problems following an airbag deployment, you should seek medical attention.

Your vehicle has a feature that may automatically unlock the doors, turn the interior lamps on, and turn the hazard warning flashers on when the airbags inflate. You can lock the doors again, turn the interior lamps off, and turn the hazard warning flashers off by using the controls for those features.

In many crashes severe enough to inflate an airbag, windshields are broken by vehicle deformation. Additional windshield breakage may also occur from the right front passenger airbag.

- Airbags are designed to inflate only once. After they inflate, you will need some new parts for the airbag system. If you do not get them, the airbag system will not be there to help protect you in another crash. A new system will include airbag modules and possibly other parts. The service manual for your vehicle covers the need to replace other parts.
- Your vehicle has a crash sensing and diagnostic module which records information after a crash. See *Vehicle Data Collection and Event Data Recorders on page 373*.
- Let only qualified technicians work on the airbag system. Improper service can mean that an airbag system will not work properly. See your dealer for service.

Downloaded from www.Manualslib.com manuals search engine

Passenger Sensing System

Your vehicle has a passenger sensing system. The passenger airbag status indicator will be visible when you turn your ignition key to RUN or START.

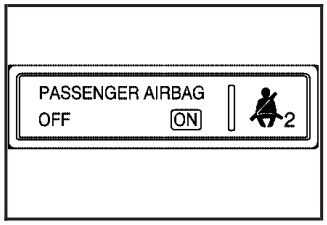

United States

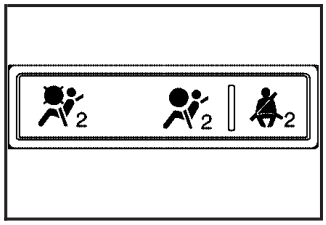

Canada

The words ON and OFF or the symbol for on and off, will be visible on the instrument panel during the system check. When the system check is complete, either the word ON or the word OFF, or the symbol for on or the symbol for off will be visible. See *Passenger Airbag Status Indicator on page 132*.

The passenger sensing system will turn off the passenger's frontal airbag under certain conditions. The driver's airbag is not part of the passenger sensing system.

The passenger sensing system works with sensors that are part of the passenger's seat. The sensors are designed to detect the presence of a properly-seated occupant and determine if the passenger's frontal airbag should be enabled (may inflate) or not.

Accident statistics show that children are safer if they are restrained in the rear rather than the front seat. We recommend that rear-facing child restraints not be transported in your vehicle, even if the airbag is off.

Never put a child in a rear-facing child restraint in the right front passenger seat unless the passenger airbag status indicator shows off and the airbag is off. Here is why:

Downloaded from www.Manualslib.com manuals search engine

⚠ CAUTION:

A child in a rear-facing child restraint can be seriously injured or killed if the right front passenger's airbag inflates. This is because the back of the rear-facing child restraint would be very close to the inflating airbag. Be sure the airbag is off before using a rear-facing child restraint in the right front seat position.

Even though the passenger sensing system is designed to turn off the passenger's frontal airbag if the system detects a rear-facing child restraint, no system is fail-safe, and no one can guarantee that an airbag will not deploy under some unusual circumstance, even though it is turned off. We recommend that rear-facing child restraints be transported in vehicles with a rear seat that will accommodate a rear-facing child restraint, whenever possible.

CAUTION: (Continued)

CAUTION: (Continued)

If you need to secure a forward-facing child restraint in the right front seat, always move the front passenger seat as far back as it will go. It is better to secure the child restraint in a rear seat.

The passenger sensing system is designed to turn off the passenger's frontal airbag if:

- The passenger seat is unoccupied.
- The system determines that an infant is present in a rear-facing infant seat.
- The system determines that a small child is present in a forward-facing child restraint.
- The system determines that a small child is present in a booster seat.
- A passenger takes his/her weight off of the seat for a period of time.
- The passenger seat is occupied by a smaller person, such as a child who has outgrown child restraints.
- Or, if there is a critical problem with the airbag system or the passenger sensing system.

Downloaded from www.Manualslib.com manuals search engine

When the passenger sensing system has turned off the passenger's frontal airbag, the off indicator in the instrument panel will light and stay lit to remind you that the airbag is off. See *Passenger Airbag Status Indicator on page 132*.

If a child restraint has been installed and the on indicator is lit, turn the vehicle off. Remove the child restraint from the vehicle and reinstall the child restraint following the child restraint manufacturer's directions and refer to *Securing a Child Restraint in the Passenger Seat Position on page 38*.

If, after reinstalling the child restraint and restarting the vehicle, the on indicator is still lit, check to make sure that the vehicle's seatback is not pressing the child restraint into the seat cushion. If this happens, slightly recline the vehicle's seatback and adjust the seat cushion if possible.

If the on indicator is still lit, do not install a child restraint in this vehicle and check with your dealer.

The passenger sensing system is designed to enable (may inflate) the passenger's frontal airbag anytime the system senses that a person of adult size is sitting properly in the passenger's seat.

When the passenger sensing system has allowed the airbag to be enabled, the on indicator will light and stay lit to remind you that the airbag is active.

For some children who have outgrown child restraints and for very small adults, the passenger sensing system may or may not turn off the passenger's frontal airbag, depending upon the person's seating posture and body build. Everyone in your vehicle who has outgrown child restraints should wear a safety belt properly — whether or not there is an airbag for that person.

If a person of adult-size is sitting in the passenger's seat, but the off indicator is lit, it could be because that person is not sitting properly in the seat. If this happens, turn the vehicle off and ask the person to place the seatback in the fully upright position, then sit upright in the seat, centered on the seat cushion, with the person's legs comfortably extended. Restart the vehicle and have the person remain in this position for about two minutes. This will allow the system to detect that person and then enable the passenger's airbag.

Downloaded from www.Manualslib.com manuals search engine

⚠ CAUTION:

If the airbag readiness light in the instrument panel cluster ever comes on and stays on, it means that something may be wrong with the airbag system.

CAUTION: (Continued)

CAUTION: (Continued)

If this ever happens, have the vehicle serviced promptly, because an adult-size person sitting in the right front passenger's seat may not have the protection of the frontal airbag. See *Airbag Readiness Light on page 131* for more on this, including important safety information.

A thick layer of additional material such as a blanket, or aftermarket equipment such as seat covers, seat heaters, and seat massagers can affect how well the passenger sensing system operates. Remove any additional material from the seat cushion before reinstalling or securing the child restraint and before a small occupant, including a small adult, sits in the passenger position. You may want to consider not using seat covers or other aftermarket equipment if your vehicle has the passenger sensing system. See *Adding Equipment to Your Airbag-Equipped Vehicle on page 55* for more information about modifications that can affect how the system operates.

Downloaded from www.Manualslib.com manuals search engine

Servicing Your Airbag-Equipped Vehicle

Airbags affect how your vehicle should be serviced. There are parts of the airbag system in several places around your vehicle. You do not want the system to inflate while someone is working on your vehicle. Your dealer and the service manual have information about servicing your vehicle and the airbag system. To purchase a service manual, see *Service Publications Ordering Information on page 380*.

⚠ CAUTION:

For up to 10 seconds, after the ignition is turned off and the battery is disconnected, an airbag can still inflate during improper service. You can be injured if you are close to an airbag when it inflates. Avoid yellow connectors. They are probably part of the airbag system. Be sure to follow proper service procedures, and make sure the person performing work for you is qualified to do so.

The airbag system does not need regular maintenance.

Downloaded from www.Manualslib.com manuals search engine

Adding Equipment to Your Airbag-Equipped Vehicle

Q: Is there anything I might add to the front of the vehicle that could keep the airbags from working properly?

A: Yes. If you add things that change your vehicle's frame, bumper system, height, front end or side sheet metal, they may keep the airbag system from working properly. Also, the airbag system may not work properly if you relocate any of the airbag sensors. If you have any questions about this, you should contact Customer Assistance before you modify your vehicle. The phone numbers and addresses for Customer Assistance are in Step Two of the *Customer Satisfaction Procedure on page 362*.

Q: Because I have a disability, I have to get my vehicle modified. How can I find out whether this will affect my airbag system?

A: Changing or moving any parts of the front seats, safety belts, the airbag sensing and diagnostic module, steering wheel, the instrument panel, or airbag wiring can affect the operation of the airbag system. If you have questions, call Customer Assistance. The phone numbers and addresses for Customer Assistance are in Step Two of the Customer Satisfaction Procedure in this manual. See *Customer Satisfaction Procedure on page 362*.

Downloaded from www.Manualslib.com manuals search engine

Restraint System Check

Checking the Restraint Systems

Now and then, make sure the safety belt reminder light and all your belts, buckles, latch plates, retractors and anchorages are working properly. Look for any other loose or damaged safety belt system parts. If you see anything that might keep a safety belt system from doing its job, have it repaired. See *Care of Safety Belts on page 317* for more information.

Torn or frayed safety belts may not protect you in a crash. They can rip apart under impact forces. If a belt is torn or frayed, get a new one right away.

Also look for any opened or broken airbag covers, and have them repaired or replaced. The airbag system does not need regular maintenance.

Notice: **If you damage the covering for the driver's or the right front passenger's airbag, the airbag may not work properly. You may have to replace the airbag module in the steering wheel or both the airbag module and the instrument panel for the right front passenger's airbag. Do not open or break the airbag coverings.**

Downloaded from www.Manualslib.com manuals search engine

Replacing Restraint System Parts After a Crash

⚠ CAUTION:

A crash can damage the restraint systems in your vehicle. A damaged restraint system may not properly protect the person using it, resulting in serious injury or even death in a crash. To help make sure your restraint systems are working properly after a crash, have them inspected and any necessary replacements made as soon as possible.

If you have had a crash, do you need new belts?

After a very minor collision, nothing may be necessary. But if the belts were stretched, as they would be if worn during a more severe crash, then you need new parts.

If belts are cut or damaged, replace them. Collision damage also may mean you will need to have safety belt or seat parts repaired or replaced. New parts and repairs may be necessary even if the belt was not being used at the time of the collision.

If an airbag inflates, you will need to replace airbag system parts. See the part on the airbag system earlier in this section.

If the frontal airbags inflate, you will also need to replace the driver's and passenger's safety belt retractor assembly. Be sure to do so. Then the new retractor assembly will be there to help protect you in a collision.

After a crash you may need to replace the driver and front passenger's safety belt retractor assemblies, even if the frontal airbags have not deployed. The driver and front passenger's safety belt retractor assemblies contain the safety belt pretensioners. Have your safety belt pretensioners checked if your vehicle has been in a collision, or if your airbag readiness light stays on after you start your vehicle or while you are driving. See *Airbag Readiness Light on page 131*.

Downloaded from www.Manualslib.com manuals search engine

NOTES

Downloaded from www.Manualslib.com manuals search engine

Section 2 Features and Controls

Keys 60
Remote Keyless Entry (RKE) System 61
Remote Keyless Entry (RKE) System Operation 62
Doors and Locks 65
Manual Door Locks 65
Power Door Locks 66
Delayed Locking 66
Automatic Door Lock 67
Automatic Door Unlock 67
Trunk 68
Windows 70
Manual Windows 71
Power Windows 71
Sun Visors 71
Theft-Deterrent Systems 72
Content Theft-Deterrent 72
PASS-Key® III+ 74
PASS-Key® III+ Operation 74
Starting and Operating Your Vehicle 76
New Vehicle Break-In 76
Ignition Positions 77
Retained Accessory Power (RAP) 80
Starting the Engine 80
Automatic Transmission Operation 82
Manual Transmission Operation 85
Parking Brake 86
Shifting Into Park (P) (Automatic Transmission) 87
Shifting Out of Park (P) 89
Parking Your Vehicle (Manual Transmission) 89
Parking Over Things That Burn 90
Engine Exhaust 91
Running the Engine While Parked 92
Mirrors 93
Manual Rearview Mirror 93
Manual Rearview Mirror with OnStar® 93
Outside Manual Mirror 93
Outside Power Mirrors 94
OnStar® System 94
Storage Areas 98
Glove Box 98
Cupholder(s) 98
Center Console Storage Area 99
Convertible Top 99

Downloaded from www.Manualslib.com manuals search engine

Keys

⚠ CAUTION:

Leaving children in a vehicle with the ignition key is dangerous for many reasons. They could operate the power windows or other controls or even make the vehicle move. The children or others could be badly injured or even killed. Do not leave the keys in a vehicle with children.

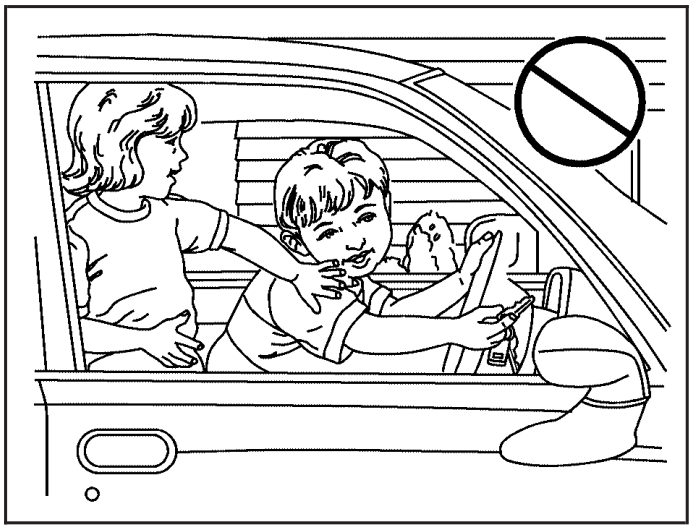

Downloaded from www.Manualslib.com manuals search engine

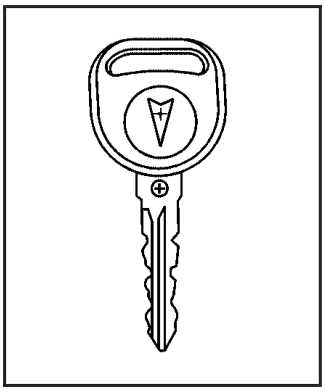

One key works all of the lock cylinders on the vehicle.

Your vehicle has an Immobilizer Vehicle Theft-Deterrent System. The key has a transponder in the key head that matches a decoder in the vehicle's steering column. If a replacement key or any additional key is needed, you must purchase it from your dealer. The key will have a ⊕ stamped on it. Keep the bar code tag that came with the original keys. Give this tag to your dealer if you need a new key made.

Notice: **If you ever lock your keys in your vehicle, you may have to damage the vehicle to get in. Be sure you have spare keys.**

In an emergency, contact Roadside Assistance. See *Roadside Assistance Program on page 368*.

Remote Keyless Entry (RKE) System

Your Remote Keyless Entry (RKE) system operates on a radio frequency subject to Federal Communications Commission (FCC) Rules and with Industry Canada.

This device complies with Part 15 of the FCC Rules. Operation is subject to the following two conditions:

1. This device may not cause interference.
2. This device must accept any interference received, including interference that may cause undesired operation of the device.

This device complies with RSS-210 of Industry Canada. Operation is subject to the following two conditions:

1. This device may not cause interference.
2. This device must accept any interference received, including interference that may cause undesired operation of the device.

Changes or modifications to this system by other than an authorized service facility could void authorization to use this equipment.

Downloaded from www.Manualslib.com manuals search engine

At times you may notice a decrease in operating range. This is normal for any RKE system. If the transmitter does not work or if you have to stand closer to your vehicle for the transmitter to work, try this:

- Check the distance. You may be too far from your vehicle. You may need to stand closer during rainy or snowy weather.
- Check the location. Other vehicles or objects may be blocking the signal. Take a few steps to the left or right, hold the transmitter higher, and try again.
- Check to determine if battery replacement is necessary. See “Battery Replacement” under *Remote Keyless Entry (RKE) System Operation on page 62*.
- If you are still having trouble, see your dealer or a qualified technician for service.

Remote Keyless Entry (RKE) System Operation

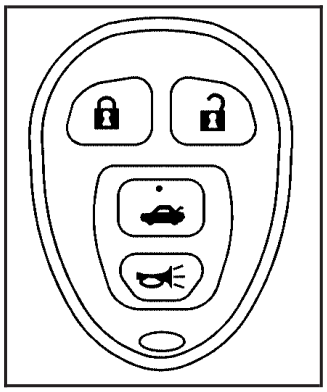

The vehicle’s doors can be locked and unlocked, and the trunk can be unlatched from about 3 feet (1 m) up to 60 feet (18 m) away with the Remote Keyless Entry (RKE) transmitter.

(Lock): Press the lock button to lock all the doors. If enabled through the Driver Information Center (DIC), the parking lamps may flash once and the horn may chirp to indicate locking has occurred. See “LOCK HORN” under *DIC Vehicle Personalization on page 152*.

Downloaded from www.Manualslib.com manuals search engine

(Unlock): Press the unlock button one time to unlock the driver's door. Press the unlock button again within five seconds to unlock the other doors. The interior lamps will come on and stay on for 20 seconds or until the ignition is turned on. If enabled through the DIC, the parking lamps will flash once to indicate unlocking has occurred. See "UNLOCK HORN" under *DIC Vehicle Personalization on page 152*.

(Trunk Release): Press and hold this button for approximately one second to release the trunk lid. The trunk release will only work if the ignition is off or the vehicle speed is less than 2 mph (3 km/h).

(Vehicle Locator/Panic Alarm): Press and release this button to help locate your vehicle. The horn will sound three times and the hazard lamps will flash three times. Press and hold the button for three seconds to sound the panic alarm. The horn will sound and the hazard lamps will flash for 30 seconds. The ignition must be off for the vehicle locator/remote alarm to work. Press the vehicle locator/panic alarm button again or turn the ignition to ACC or RUN to turn off the alarm.

The vehicle may have Remote Lock/Unlock Confirmation. This feature provides feedback that a command has been received by the vehicle. The parking lamps will flash and the horn may sound briefly. See "LOCK HORN" and "UNLOCK HORN" under *DIC Vehicle Personalization on page 152* for programming information.

Matching Transmitter(s) to Your Vehicle

Each remote keyless entry transmitter is uniquely coded to prevent another transmitter from unlocking the vehicle. If a transmitter is lost or stolen, a replacement can be purchased through your dealer. Remember to bring any additional transmitters so they can also be re-coded to match the new transmitter. Once your dealer has coded the new transmitter, the lost transmitter cannot unlock the vehicle. The vehicle can have a maximum of four transmitters coded to it.

Downloaded from www.Manualslib.com manuals search engine

Battery Replacement

Under normal use, the battery in the remote keyless entry transmitter should last about four years.

If the battery is weak the transmitter will not work within its normal range. It is probably time to change the battery if you have to be very close to the vehicle before the transmitter works.

Notice: **When replacing the battery, use care not to touch any of the circuitry. Static from your body transferred to these surfaces may damage the transmitter.**

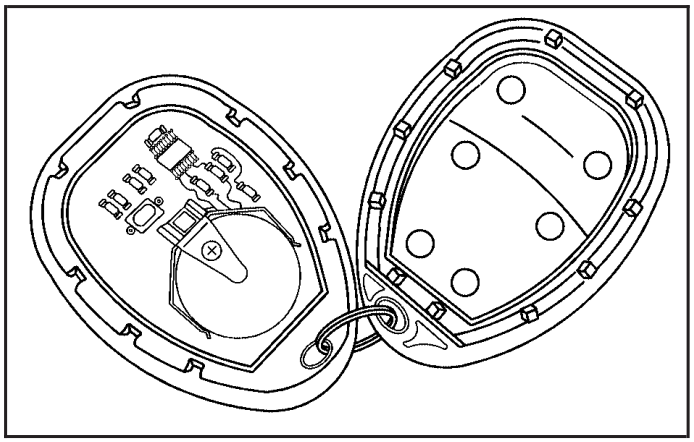

To replace the battery do the following:

1. Insert a flat object with a thin edge into the notch, located below the trunk release button, and pry the front and back apart.
2. Remove the old battery, but do not use a metal object to do this.
3. Slide the new battery into the transmitter with the positive side of the battery facing up. Use a type CR2032 battery, or equivalent type.
4. Snap the front and the back of the transmitter together.
5. Test the operation of the transmitter with the vehicle.

Downloaded from www.Manualslib.com manuals search engine

Doors and Locks

Manual Door Locks

⚠ CAUTION:

Unlocked doors can be dangerous.

- **Passengers, especially children, can easily open the doors and fall out of a moving vehicle. When a door is locked, the handle will not open it. You increase the chance of being thrown out of the vehicle in a crash if the doors are not locked. So, wear safety belts properly and lock the doors whenever you drive.**

CAUTION: (Continued)

CAUTION: (Continued)

- **Young children who get into unlocked vehicles may be unable to get out. A child can be overcome by extreme heat and can suffer permanent injuries or even death from heat stroke. Always lock your vehicle whenever you leave it.**
- **Outsiders can easily enter through an unlocked door when you slow down or stop your vehicle. Locking your doors can help prevent this from happening.**

There are a couple of ways to lock and unlock your vehicle manually.

Downloaded from www.Manualslib.com manuals search engine

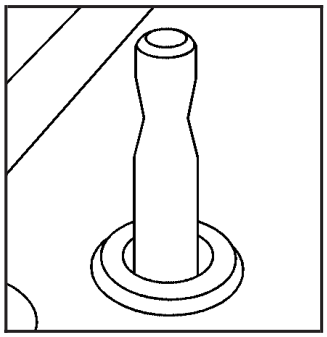

From inside the vehicle, use the manual door lock knob. Pull up or down on the knob to unlock or lock the door.

To lock either door from the outside, turn the key toward the rear of the vehicle. To unlock the door, turn the key toward the front of the vehicle.

Power Door Locks

You can use the Remote Keyless Entry (RKE) transmitter to lock and unlock the doors from inside or outside the vehicle. See *Remote Keyless Entry (RKE) System Operation on page 62* for more information.

The power door lock switches are located on the driver's and passenger's door.

Press the top of the switch to unlock all doors. Press the bottom of the switch to lock all doors.

Delayed Locking

If your vehicle has power door locks, it will have the delayed locking feature. This feature delays the actual locking of the doors when the Remote Keyless Entry (RKE) transmitter is used to lock the vehicle.

If any door is open when locking the vehicle using the RKE transmitter, three chimes will sound signaling that the delayed locking feature is active. Five seconds after the last door is closed, both doors will lock and the parking lamps will flash. To cancel the delay and lock the doors immediately, press the lock button on the RKE a second time.

If the key is in the ignition, this feature will not lock the doors.

Your vehicle is programmed from the factory with this feature turned off. To turn the feature on, you must go through the Driver Information Center (DIC), if the vehicle has one. See *DIC Vehicle Personalization on page 152*.

Downloaded from www.Manualslib.com manuals search engine

Automatic Door Lock

If your vehicle has power door locks, the doors will automatically lock when the shift lever is moved out of PARK (P) for a vehicle with an automatic transmission. For a vehicle with a manual transmission, the speed must be greater than 5 mph (8 km/h).

The automatic door locking feature cannot be disabled.

Automatic Door Unlock

If your vehicle has an automatic transmission and power door locks, the doors with automatically unlock when the shift lever is moved into PARK (P).

If your vehicle has a manual transmission and power door locks, the doors will automatically unlock when the key is removed from the ignition.

The automatic unlock feature can be disabled or programmed in different ways if the vehicle has an automatic transmission and a Driver Information Center (DIC). See *DIC Vehicle Personalization on page 152* for more information.

Downloaded from www.Manualslib.com manuals search engine

Trunk

To release the trunk lid from the outside, use the Remote Keyless Entry (RKE) transmitter, if the vehicle has one. If your vehicle does not have an RKE transmitter, see “Remote Trunk Release” following.

⚠ CAUTION:

It can be dangerous to drive with the trunk lid open because carbon monoxide (CO) gas can come into your vehicle. You cannot see or smell CO. It can cause unconsciousness and even death.

CAUTION: (Continued)

CAUTION: (Continued)

If you must drive with the trunk lid open or if electrical wiring or other cable connections must pass through the seal between the body and the trunk lid:

- **Make sure all other windows are shut.**
- **Turn the fan on your heating or cooling system to its highest speed and select the control setting that will force outside air into your vehicle. See Climate Control System.**
- **If you have air outlets on or under the instrument panel, open them all the way.**

See *Engine Exhaust on page 91*.

Downloaded from www.Manualslib.com manuals search engine

Remote Trunk Release

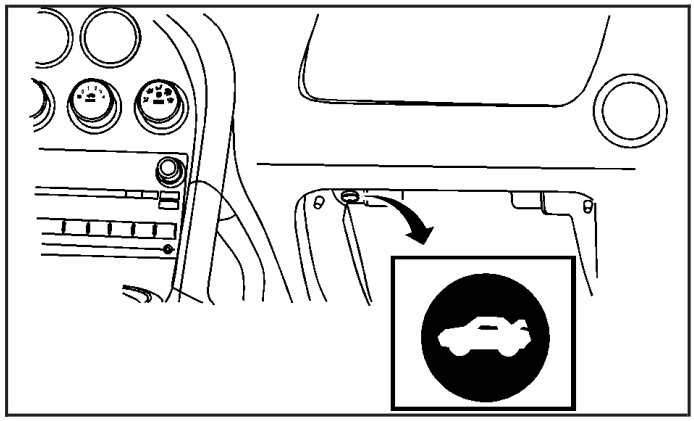

To open the trunk from inside the vehicle, press the remote trunk release button located in the glovebox.

The remote trunk release will only work when either the ignition is off or in ACC, the parking brake is engaged, or the vehicle speed is less than 2 mph (3 km/h).

Emergency Trunk Release Handle

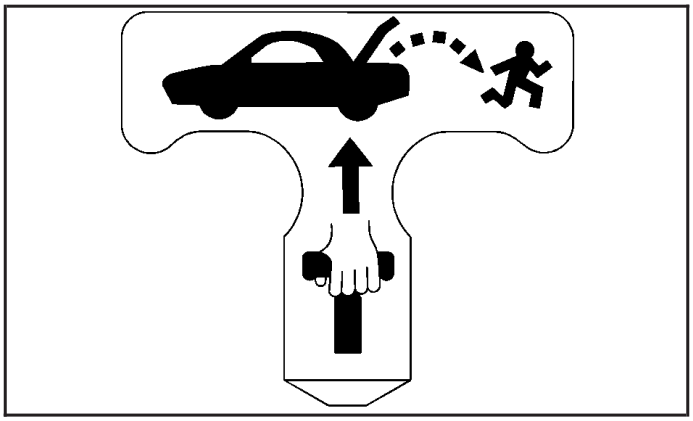

Notice: **Do not use the emergency trunk release handle as a tie-down or anchor point when securing items in the trunk as it could damage the handle. The emergency trunk release handle is only intended to aid a person trapped in a latched trunk, enabling them to open the trunk from the inside.**

There is a glow-in-the-dark emergency trunk release handle located inside the trunk on the driver's side. This handle will glow following exposure to light. If someone is locked in the trunk, they can pull the release handle and push the trunk lid open from the inside to open the trunk.

Downloaded from www.Manualslib.com manuals search engine

Windows

⚠ CAUTION:

Leaving children, helpless adults, or pets in a vehicle with the windows closed is dangerous. They can be overcome by the extreme heat and suffer permanent injuries or even death from heat stroke. Never leave a child, a helpless adult, or a pet alone in a vehicle, especially with the windows closed in warm or hot weather.

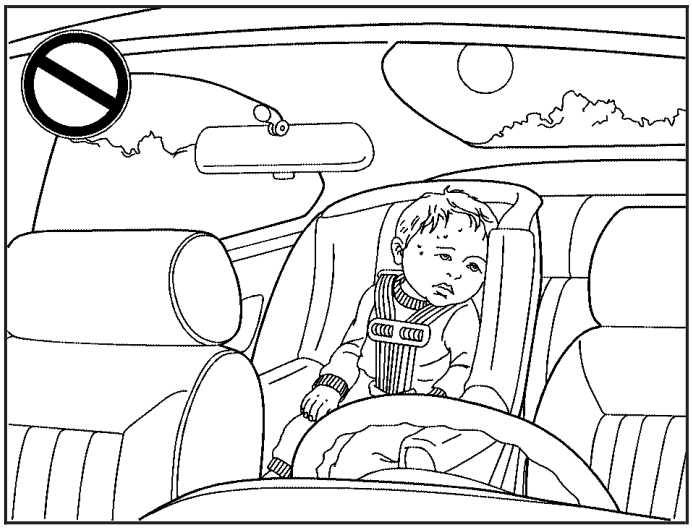

Downloaded from www.Manualslib.com manuals search engine

Manual Windows

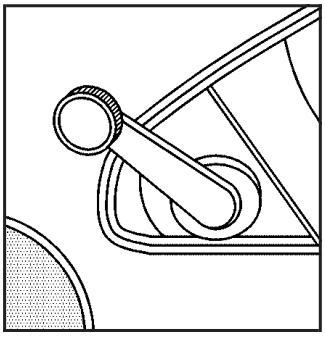

If your vehicle has manual windows, use the window crank to open and close each window.

Power Windows

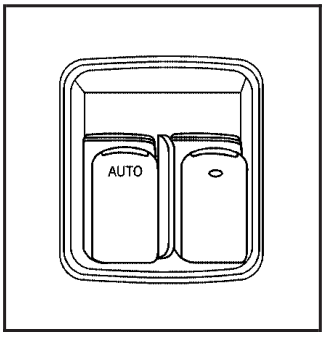

If your vehicle has power windows, the switches on the driver's door armrest control both windows.

In addition, the passenger's door has a window switch that controls that window. Press the front of the switch to open the window. Pull the switch up to close it.

Express-Down Window

The driver's window has an express-down feature which allows the window to be lowered fully without pressing and holding the switch. Press the front of the switch to the first position, and the window will open a small amount. Press the switch down fully and the window will go all the way down.

To stop the window while it is lowering, pull the front of the switch up.

Sun Visors

To use the sun visor(s), pull the edge of the visor nearest to the windshield toward you.

Visor Vanity Mirror

Your vehicle may have a driver's side vanity mirror. Swing down the sun visor and slide the cover to expose the mirror.

Downloaded from www.Manualslib.com manuals search engine

Theft-Deterrent Systems

Vehicle theft is big business, especially in some cities. Although your vehicle has a number of theft-deterrent features, we know that nothing we put on it can make it impossible to steal.

Content Theft-Deterrent

Your vehicle may have a content theft-deterrent alarm system.

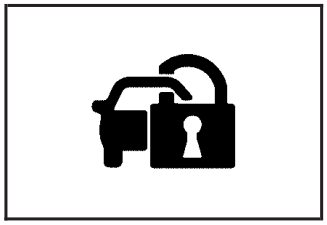

The security light, located on the instrument panel cluster, will turn on to indicate that arming has been initiated.

Once the system is armed, the security light will flash once every three seconds.

If the security light is flashing twice per second, this means that a door is open.

Arming the System

While the ignition is off, press the remote keyless entry transmitter lock button, to arm the system.

The system will arm after either of these things occur:

- Thirty seconds after all the doors are closed.
- Sixty seconds with any door open.

If you press the lock button on the transmitter a second time while all the doors are closed, the system will arm immediately. The system arms in 60 seconds if a door is open, or after the open door is closed.

If you do not want to arm the system, lock the car with the manual door lock knobs.

Downloaded from www.Manualslib.com manuals search engine

Disarming the System

You can disarm the system by doing any one of the following:

- Press the unlock button on the remote keyless entry transmitter.
- Turn the ignition on.

If the system is armed and the trunk is opened using the trunk release button on the transmitter, the system will temporarily disarm itself and re-arm when the trunk has been closed. This allows you to exit the vehicle, lock the doors using the transmitter, or open the trunk using the transmitter without having to disarm and re-arm the system.

Once the system is disarmed, the security light will stop flashing.

How the System Alarm is Activated

If the system is armed, it can be activated by:

- Opening the driver's door or trunk. This causes a ten second pre-alarm chirping noise followed by the horn sounding and lights flashing for 30 seconds.
- Opening a passenger's door. This immediately causes a full alarm of the horn sounding and lights flashing for 30 seconds.

After the 30 second alarm ends, the system will re-arm itself.

How to Turn Off the System Alarm

To turn off the system alarm, do one of the following:

- Press the lock button on the remote keyless entry transmitter. The system will then re-arm itself.
- Press the unlock button on the remote keyless entry transmitter. This will also disarm the system.
- Insert the key in the ignition and turn it on. This will also disarm the system.

Downloaded from www.Manualslib.com manuals search engine

How to Detect a Tamper Condition

If you hear three chirps when you press the unlock, lock, or trunk release buttons on the remote keyless transmitter, it means that the content theft security system alarm was activated previously.

PASS-Key® III+

The PASS-Key® III+ system operates on a radio frequency subject to Federal Communications Commission (FCC) Rules and with Industry Canada.

This device complies with Part 15 of the FCC Rules. Operation is subject to the following two conditions:

1. This device may not cause harmful interference.
2. This device must accept any interference received, including interference that may cause undesired operation.

This device complies with RSS-210 of Industry Canada. Operation is subject to the following two conditions:

1. This device may not cause interference.
2. This device must accept any interference received, including interference that may cause undesired operation of the device.

Changes or modifications to this system by other than an authorized service facility could void authorization to use this equipment.

PASS-Key® III+ uses a radio frequency transponder in the key that matches a decoder in your vehicle.

PASS-Key® III+ Operation

Your vehicle is equipped with PASS-Key® III+ (Personalized Automotive Security System) theft-deterrent system. PASS-Key® III+ is a passive theft-deterrent system. This means you do not have to do anything special to arm or disarm the system. It works when you insert or remove the key from the ignition.

Downloaded from www.Manualslib.com manuals search engine

When the PASS-Key® III+ system senses that someone is using the wrong key, it prevents the vehicle from starting. Anyone using a trial-and-error method to start the vehicle will be discouraged because of the high number of electrical key codes.

When trying to start the vehicle if the engine does not start and the security light on the instrument panel cluster comes on, the key may have a damaged transponder. Turn the ignition off and try again.

If the engine still does not start, and the key appears to be not damaged, try another ignition key. At this time, you may also want to check the fuse, see *Fuses and Circuit Breakers on page 326*. If the engine still does not start with the other key, your vehicle needs service. If your vehicle does start, the first key may be faulty. See your dealer who can service the PASS-Key® III+ to have a new key made. In an emergency, contact Roadside Assistance. See *Roadside Assistance Program on page 368*.

It may be possible for the PASS-Key® III+ decoder to “learn” the transponder value of a new or replacement key. Up to 10 keys may be programmed for the vehicle. The following procedure is for programming additional keys only. If your vehicle was first sold in Canada, or if all the currently programmed keys are lost or do not operate, you must see your dealer or a locksmith who can service PASS-Key® III+ to have keys made and programmed to the system.

See your dealer or a locksmith who can service PASS-Key® III+ to get a new key blank that is cut exactly as the ignition key that operates the system.

To program the new key do the following:

1. Verify that the new key has a ⊕ stamped on it.
2. Insert the already programmed key in the ignition and start the engine. If the engine will not start, see your dealer for service.
3. After the engine has started, turn the key to LOCK, and remove the key.

Downloaded from www.Manualslib.com manuals search engine

4. Insert the key to be programmed and turn it to the RUN position within five seconds of the original key being turned to the LOCK position.
5. The security light will turn off once the key has been programmed.
6. Repeat Steps 1 through 5 if additional keys are to be programmed.

If you are ever driving and the security light comes on and stays on, you may be able to restart your engine if you turn it off. Your PASS-Key® III+ system, however, is not working properly and must be serviced by your dealer. Your vehicle is not protected by the PASS-Key® III+ system at this time.

If you lose or damage your PASS-Key® III+ key, see your dealer or a locksmith who can service PASS-Key® III+ to have a new key made.

Starting and Operating Your Vehicle

New Vehicle Break-In

Notice: **Your vehicle does not need an elaborate break-in. But it will perform better in the long run if you follow these guidelines for the first 500 miles (805 km):**

- **Do not drive at any one constant speed, fast or slow.**
- **Do not exceed 70 mph (113 km/h).**
- **Do not make full-throttle starts; also refrain from using the full throttle while driving. Avoid downshifting to brake, or slow, the vehicle.**

If these break-in procedures are not followed, the vehicle's engine, axle, or other parts could be damaged.

Avoid making hard stops for the first 200 miles (322 km) or so. During this time your new brake linings are not yet broken in. Hard stops with new linings can mean premature wear and earlier replacement. Follow this breaking-in guideline every time you get new brake linings.

Following break-in, engine speed and load can be gradually increased.

Downloaded from www.Manualslib.com manuals search engine

Ignition Positions

With the key in the ignition switch, you can turn it to four different positions.

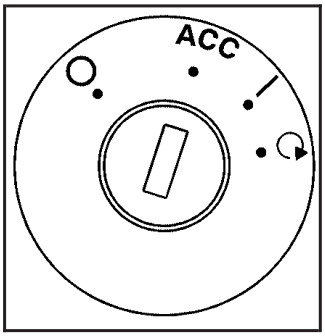

Notice: **Using a tool to force the key from the ignition switch could cause damage or break the key. Use the correct key and turn the key only with your hand. Make sure the key is all the way in. If it is, turn the steering wheel left and right while you turn the key hard. If none of this works, then your vehicle needs service.**

○ **(LOCK):** This position locks your steering column. It is a theft-deterrent feature. You will only be able to remove your key when the ignition is turned to LOCK.

If you have an automatic transmission, the ignition switch cannot be turned to LOCK unless the shift lever is in PARK (P).

If you have a manual transmission, the ignition switch can be turned to LOCK in any shift lever position.

⚠ CAUTION:

If you have a manual transmission removing the key from the ignition switch will lock the steering column and result in a loss of ability to steer the vehicle. This could cause a collision. If you need to turn the engine off while the vehicle is moving, turn the key to ACC.

ACC (ACCESSORY): This position operates some of your electrical accessories. It unlocks the steering wheel and ignition.

Downloaded from www.Manualslib.com manuals search engine

(RUN): This is the position the switch returns to after you start your engine and release the switch. The switch stays in RUN when the engine is running. But even when the ignition is not running, you can use RUN to operate your electrical accessories and to display some warning and indicator lights.

The battery could be drained if you leave the key in the ACC or RUN position with the engine off. You may not be able to start your vehicle if the battery is allowed to drain for an extended period of time.

(START): This position starts the engine. When the engine starts, release the key. The ignition switch will return to RUN for normal driving.

A warning tone will sound if you open the driver's door while in LOCK or ACC, when the key has not been removed from the ignition.

Key In the Ignition

Never leave your vehicle with the keys inside, as it is an easy target for joy riders or thieves. If you leave the key in the ignition and park your vehicle, a chime will sound when you open the driver's door. Always remember to remove the key from the ignition and take it with you. This will lock the ignition and transmission. Also, always remember to lock the doors.

The battery could be drained if you leave the key in the ignition while your vehicle is parked. You may not be able to start your vehicle after it has been parked for an extended period of time.

Downloaded from www.Manualslib.com manuals search engine

Shift Lock Release

For vehicles with an automatic transmission, the following procedure allows the ignition to be turned to LOCK, and for the removal of the ignition key, in case of a dead battery or low voltage battery.

1. Make sure the shift lever is in PARK (P).

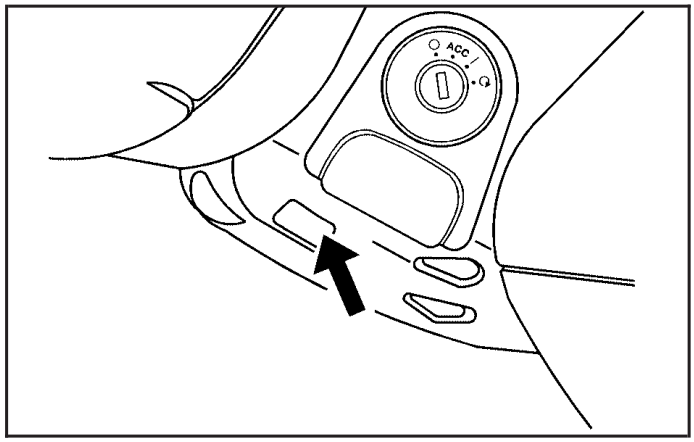

2. Using a tool, pry off the cover to the lock release access hole, located at the bottom of the steering column.

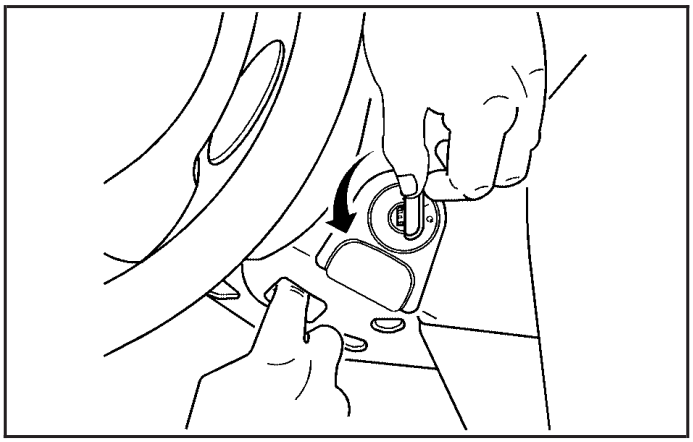

3. Place your finger into the access hole and locate the plunger.
4. Press and hold the plunger toward the driver's door while turning the ignition key to LOCK.
5. Remove the key.

Have your vehicle serviced at your dealer as soon as possible.

Downloaded from www.Manualslib.com manuals search engine

Retained Accessory Power (RAP)

Your vehicle has a Retained Accessory Power (RAP) feature which will allow the radio and power windows to continue to work up to 10 minutes after the ignition is turned off.

Your vehicle's radio will work when the ignition key is in RUN or ACC. Once the key is turned off, the radio and power windows will continue to work for up to 10 minutes or until any door is opened.

Starting the Engine

Place the transmission in the proper gear.

Automatic Transmission

Move your shift lever to PARK (P) or NEUTRAL (N). Your engine will not start in any other position -- this is a safety feature. To restart when you are already moving, use NEUTRAL (N) only.

Notice: **Do not try to shift to PARK (P) if your vehicle is moving. If you do, you could damage the transmission. Shift to PARK (P) only when your vehicle is stopped.**

Manual Transmission

The shift lever should be in the neutral position and the parking brake engaged. Hold the clutch pedal to the floor and start the engine. Your vehicle will not start if the clutch pedal is not all the way down. That is a safety feature.

Starting Procedure

1. With your foot off the accelerator pedal, turn the ignition key to START. When the engine starts, let go of the key. The idle speed will go down as your engine gets warm. Do not race the engine immediately after starting it. Operate the engine and transmission gently to allow the oil to warm up and lubricate all moving parts.

Downloaded from www.Manualslib.com manuals search engine

Your vehicle has a Computer-Controlled Cranking System. This feature assists in starting the engine and protects components. If the ignition key is turned to the START position, and then released when the engine begins cranking, the engine will continue cranking for a few seconds or until the vehicle starts. If the engine does not start and the key is held in START for many seconds, cranking will be stopped after 15 seconds to prevent cranking motor damage. To prevent gear damage, this system also prevents cranking if the engine is already running. Engine cranking can be stopped by turning the ignition switch to ACC or LOCK.

Notice: **Cranking the engine for long periods of time, by returning the key to the START position immediately after cranking has ended, can overheat and damage the cranking motor, and drain the battery. Wait at least 15 seconds between each try, to allow the cranking motor to cool down.**

2. If the engine does not start after 5-10 seconds, especially in very cold weather (below 0°F or –18°C), it could be flooded with too much gasoline. Try pushing the accelerator pedal all the way to the floor and holding it there as you hold the key in START for up to a maximum of 15 seconds. Wait at least 15 seconds between each try, to allow the cranking motor to cool down. When the engine starts, let go of the key and accelerator. If the vehicle starts briefly but then stops again, do the same thing. This clears the extra gasoline from the engine. Do not race the engine immediately after starting it. Operate the engine and transmission gently until the oil warms up and lubricates all moving parts.

Notice: **Your engine is designed to work with the electronics in your vehicle. If you add electrical parts or accessories, you could change the way the engine operates. Before adding electrical equipment, check with your dealer. If you do not, your engine might not perform properly. Any resulting damage would not be covered by your vehicle's warranty.**

Downloaded from www.Manualslib.com manuals search engine

Automatic Transmission Operation

If your vehicle has an automatic transmission, the shift lever is located on the center console between the front seats.

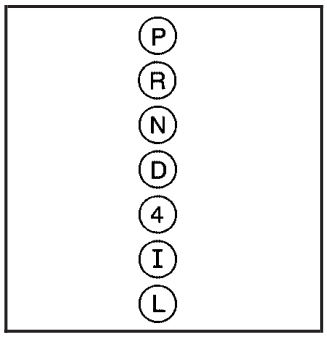

There are several different positions for the shift lever.

PARK (P): This position locks the rear wheels. It is the best position to use when you start the engine because your vehicle cannot move easily.

⚠ CAUTION:

It can be dangerous to get out of your vehicle if the shift lever is not fully in PARK (P) with the parking brake firmly set. Your vehicle can roll. If you have left the engine running, the vehicle can move suddenly. You or others could be injured. To be sure your vehicle will not move, even when you are on fairly level ground, use the steps that follow.

Make sure the shift lever is fully in PARK (P) before starting the engine. Your vehicle has an automatic transmission shift lock control system. You must fully apply your regular brakes first and then press the shift lever button before you can shift from PARK (P) when the ignition key is in RUN. If you cannot shift out of PARK (P), ease pressure on the shift lever and push the shift lever all the way into PARK (P) as you maintain brake application. Then press the shift lever button and move the shift lever into another gear. See *Shifting Out of Park (P) on page 89*.

Downloaded from www.Manualslib.com manuals search engine

Notice: **Shifting to REVERSE (R) while your vehicle is moving forward could damage the transmission. The repairs would not be covered by your warranty. Shift to REVERSE (R) only after your vehicle is stopped.**

REVERSE (R): Use this gear to back up.

At low vehicle speeds, you can also use REVERSE (R) to rock your vehicle back and forth to get out of snow, ice, or sand without damaging your transmission. See *If Your Vehicle is Stuck in Sand, Mud, Ice, or Snow on page 224* for additional information.

NEUTRAL (N): In this position, the engine does not connect with the wheels. To restart when you are already moving, use NEUTRAL (N) only. You can also use NEUTRAL (N) when your vehicle is being towed.

⚠ CAUTION:

Shifting into a drive gear while your engine is running at high speed is dangerous. Unless your foot is firmly on the brake pedal, your vehicle could move very rapidly. You could lose control and hit people or objects. Do not shift into a drive gear while your engine is running at high speed.

Notice: **Shifting out of PARK (P) or NEUTRAL (N) with the engine running at high speed may damage the transmission. The repairs would not be covered by your warranty. Be sure the engine is not running at high speed when shifting your vehicle.**

Downloaded from www.Manualslib.com manuals search engine

DRIVE (D): This position is for normal driving. It provides better fuel economy for your vehicle. If you need more power for passing, and you are:

- Going less than 35 mph (55 km/h), push the accelerator pedal about halfway down.
- Going about 35 mph (55 km/h) or more, push the accelerator all the way down.
  The transmission will shift down to a lower gear and have more power.

Downshifting the transmission in slippery road conditions could result in skidding, see "Skidding" under *Loss of Control on page 208*.

Notice: **If your vehicle seems to start up rather slowly or not shift gears when you go faster, and you continue to drive your vehicle that way, you could damage the transmission. Have your vehicle serviced right away. You can drive in LOW (L) when you are driving less than 35 mph (55 km/h) and DRIVE (D) for higher speeds until then.**

FOURTH (4): This position is also used for normal driving. However, it reduces vehicle speed more than DRIVE (D) without using your brakes. You might choose FOURTH (4) instead of DRIVE (D) when driving on hilly, winding roads and when going down a steep hill.

INTERMEDIATE (I): This position is also used for normal driving. However, it reduces the vehicle's speed without using your brakes, for slight downgrades where the vehicle would otherwise accelerate due to steepness of grade. If constant upshifting or downshifting occurs while driving on steep hills, this position can be used to prevent repetitive types of shifts. You might choose INTERMEDIATE (I) instead of DRIVE (D) when driving on hilly and winding roads.

LOW (L): This position reduces vehicle speed more than INTERMEDIATE (I) without using your brakes. You can use it on very steep hills, or in deep snow or mud. If the shift lever is put in LOW (L), the transmission will not shift into low gear until the vehicle is going slowly enough.

Notice: **Spinning the tires or holding the vehicle in one place on a hill using only the accelerator pedal may damage the transmission. If you are stuck, do not spin the tires. When stopping on a hill, use the brakes to hold the vehicle in place.**

Downloaded from www.Manualslib.com manuals search engine

Manual Transmission Operation

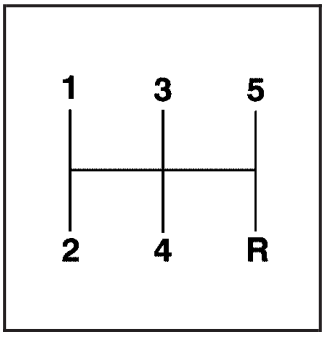

This is the shift pattern for a manual transmission.

Here is how to operate your manual transmission:

FIRST (1): Press the clutch pedal and shift into FIRST (1). Then, slowly let up on the clutch pedal as you press the accelerator pedal.

You can shift into FIRST (1) when you are going less than 20 mph (32 km/h). If you have come to a complete stop and it is hard to shift into FIRST (1), put the shift lever in NEUTRAL and let up on the clutch pedal. Press the clutch pedal back down. Then shift into FIRST (1).

SECOND (2): Press the clutch pedal as you let up on the accelerator pedal and shift into SECOND (2). Then, slowly let up on the clutch pedal as you press the accelerator pedal.

THIRD (3), FOURTH (4) and FIFTH (5): Shift into THIRD (3), FOURTH (4) and FIFTH (5) the same way you do for SECOND (2).

To stop, let up on the accelerator pedal and press the brake pedal. Just before the vehicle stops, press the clutch pedal and the brake pedal, and shift to NEUTRAL.

NEUTRAL: Use this position when you start or idle your engine.

Downloaded from www.Manualslib.com manuals search engine

REVERSE (R): To back up, press the clutch pedal. After the vehicle stops, shift into REVERSE (R). Slowly let up on the clutch pedal as you press the accelerator pedal. If it is hard to shift, let the shift lever return to NEUTRAL and release the clutch pedal. Then press the clutch pedal again and shift into REVERSE (R). Do not attempt to shift into the fifth gear position prior to shifting into REVERSE (R). Your transmission has a lock out feature which prevents a fifth gear to reverse gear shift.

Notice: **Shifting to REVERSE (R) while your vehicle is moving forward could damage the transmission. The repairs would not be covered by your warranty. Shift to REVERSE (R) only after your vehicle is stopped.**

Also, use FIRST (1) or REVERSE (R), along with the parking brake, for parking your vehicle.

Parking Brake

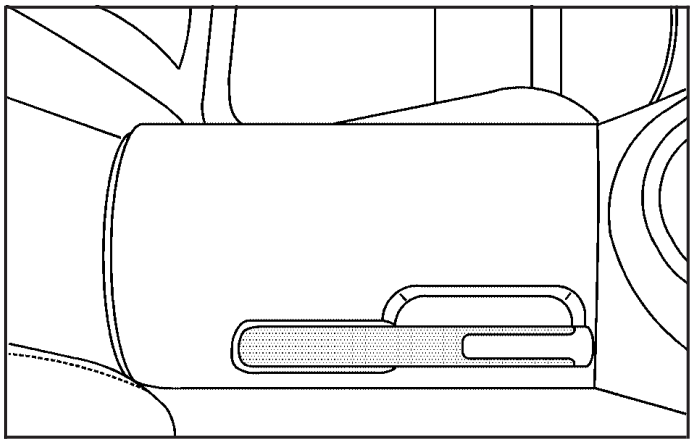

The parking brake lever is located between the front seats.

To set the parking brake, hold the brake pedal down and pull up on the parking brake lever. If the ignition is on, the brake system warning light will come on. See *Brake System Warning Light on page 134*.

Downloaded from www.Manualslib.com manuals search engine

To release the parking brake, hold the brake pedal down. Pull the parking brake lever up until you can press the release button. Hold the release button in as you move the brake lever all the way down.

If you forget to release your parking brake, a chime will sound and a warning message will be displayed in the Driver Information Center (DIC) when the vehicle is moving faster than 5 mph (8 kph). See *DIC Warnings and Messages on page 148*.

Notice: **Driving with the parking brake on can overheat the brake system and cause premature wear or damage to brake system parts. Verify that the parking brake is fully released and the brake warning light is off before driving.**

Shifting Into Park (P) (Automatic Transmission)

⚠ CAUTION:

It can be dangerous to get out of your vehicle if the shift lever is not fully in PARK (P) with the parking brake firmly set. Your vehicle can roll. If you have left the engine running, the vehicle can move suddenly. You or others could be injured. To be sure your vehicle will not move, even when you are on fairly level ground, use the steps that follow.

1. Hold the brake pedal down and set the parking brake.
2. Move the shift lever into PARK (P) by holding the button on the shift lever and pushing the lever all the way toward the front of the vehicle.
3. Turn the ignition key to LOCK.
4. Remove the key and take it with you. If you can leave your vehicle with the ignition key in your hand, your vehicle is in PARK (P).

Downloaded from www.Manualslib.com manuals search engine

Leaving Your Vehicle With the Engine Running

⚠ CAUTION:

It can be dangerous to leave your vehicle with the engine running. Your vehicle could move suddenly if the shift lever is not fully in PARK (P) with the parking brake firmly set. And, if you leave the vehicle with the engine running, it could overheat and even catch fire. You or others could be injured. Do not leave your vehicle with the engine running.

If you have to leave your vehicle with the engine running, be sure your vehicle is in PARK (P) and your parking brake is firmly set before you leave it. After you have moved the shift lever into PARK (P), hold the regular brake pedal down. If the vehicle has an automatic transmission, see if you can move the shift lever away from PARK (P) without first pushing the shift lock release button. If you can, it means that the shift lever was not fully locked into PARK (P).

Torque Lock

If you are parking on a hill and you do not shift your transmission into PARK (P) properly, the weight of the vehicle may put too much force on the parking pawl in the transmission. You may find it difficult to pull the shift lever out of PARK (P). This is called “torque lock.” To prevent torque lock, set the parking brake and then shift into PARK (P) properly before you leave the driver’s seat. To find out how, see *Shifting Into Park (P) (Automatic Transmission) on page 87*.

When you are ready to drive, move the shift lever out of PARK (P) *before* you release the parking brake.

If torque lock does occur, you may need to have another vehicle push yours a little uphill to take some of the pressure from the parking pawl in the transmission, so you can pull the shift lever out of PARK (P).

Downloaded from www.Manualslib.com manuals search engine

Shifting Out of Park (P)

Your vehicle has an automatic transmission shift lock control system.

To shift out of PARK (P):

1. Apply the regular brake pedal.
2. Then press the shift lever button.
3. Move the shift lever to the desired gear.

If you are still unable to shift out of PARK (P):

1. Fully release the shift lever button.
2. While holding down the brake pedal, press the shift lever button again.
3. Move the shift lever to the desired gear.

If you still cannot move the shift lever from PARK (P), consult your dealer.

Parking Your Vehicle (Manual Transmission)

Before leaving your manual transmission vehicle, fully press the clutch pedal in, move the shift lever in either FIRST (1) gear or REVERSE (R), and firmly apply the parking brake. See *Manual Transmission Operation on page 85*.

Downloaded from www.Manualslib.com manuals search engine

Parking Over Things That Burn

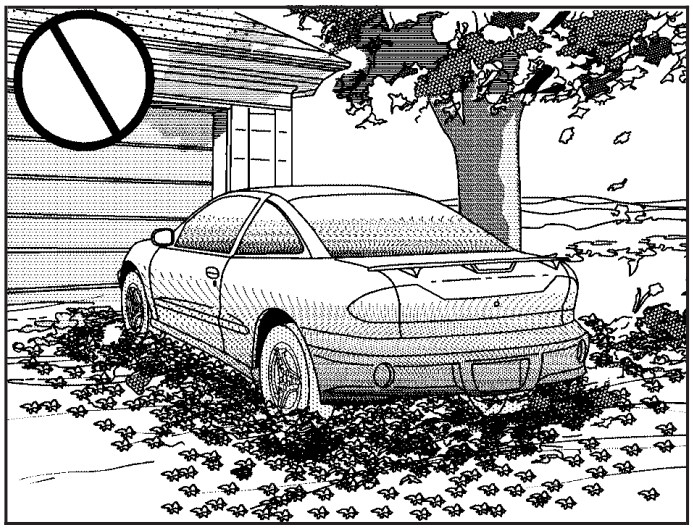

⚠ CAUTION:

Things that can burn could touch hot exhaust parts under your vehicle and ignite. Do not park over papers, leaves, dry grass, or other things that can burn.

Downloaded from www.Manualslib.com manuals search engine

Engine Exhaust

⚠ CAUTION:

Engine exhaust can kill. It contains the gas carbon monoxide (CO), which you cannot see or smell. It can cause unconsciousness and death.

You might have exhaust coming in if:

- **Your exhaust system sounds strange or different.**
- **Your vehicle gets rusty underneath.**
- **Your vehicle was damaged in a collision.**

CAUTION: (Continued)

CAUTION: (Continued)

- **Your vehicle was damaged when driving over high points on the road or over road debris.**
- **Repairs were not done correctly.**
- **Your vehicle or exhaust system has been modified improperly.**

If you ever suspect exhaust is coming into your vehicle:

- **Drive it only with all the windows down to blow out any CO; and**
- **Have your vehicle fixed immediately.**

Downloaded from www.Manualslib.com manuals search engine

Running the Engine While Parked

It is better not to park with the engine running. But if you ever have to, here are some things to know.

⚠ CAUTION:

Idling the engine with the climate control system off could allow dangerous exhaust into your vehicle. See the earlier caution under *Engine Exhaust on page 91*.

Also, idling in a closed-in place can let deadly carbon monoxide (CO) into your vehicle even if the climate control fan is at the highest setting. One place this can happen is a garage. Exhaust — with CO — can come in easily. NEVER park in a garage with the engine running.

Another closed-in place can be a blizzard. See *Winter Driving on page 220*.

⚠ CAUTION:

It can be dangerous to get out of your vehicle if the automatic transmission shift lever is not fully in PARK (P) with the parking brake firmly set. Your vehicle can roll. Do not leave your vehicle when the engine is running unless you have to. If you have left the engine running, the vehicle can move suddenly. You or others could be injured. To be sure your vehicle will not move, even when it is on fairly level ground, always set the parking brake and move the automatic transmission shift lever to PARK (P), or the manual transmission shift lever to NEUTRAL.

Follow the proper steps to be sure your vehicle will not move. See *Shifting Into Park (P) (Automatic Transmission) on page 87* and *Parking Your Vehicle (Manual Transmission) on page 89*.

Downloaded from www.Manualslib.com manuals search engine

Mirrors

Manual Rearview Mirror

When you are sitting in a comfortable driving position, adjust the mirror so you can see clearly behind your vehicle. Grip the mirror in the center to move it up or down and side to side. The day/night adjustment allows you to adjust the mirror to avoid glare from the lamps behind you. Move the lever to the right for nighttime use and to the left for daytime use.

Manual Rearview Mirror with OnStar®

If the vehicle has this mirror, while sitting in a comfortable driving position, adjust the mirror so you can see clearly behind the vehicle. Grip the mirror in the center and move it up and down or side to side. The day/night control, located at the bottom of the mirror, allows adjustment to lessen glare from the lamps behind you. Move the lever right for nighttime use; move the lever left for daytime use.

There are three OnStar® buttons located at the bottom of the mirror face. For more information about OnStar® and the services it provides, see *OnStar® System on page 94*.

Outside Manual Mirror

Adjust the outside rearview mirror so you can see a little of the side of your vehicle, and the area beside your vehicle from a comfortable driving position. Some mirrors can be folded in to enter narrow passageways.

Downloaded from www.Manualslib.com manuals search engine

Outside Power Mirrors

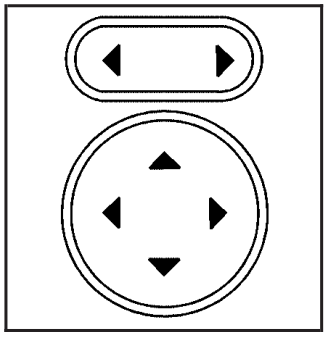

The controls for the outside power mirrors are located on the driver's door.

Move the selector switch located next to the four-way control pad to the left or right to choose either the driver's side or passenger's side mirror. To adjust a mirror, use the arrows located on the four-way control pad to move the mirror in the desired direction. Adjust each outside mirror so that a little of the vehicle and the area behind it can be seen while sitting in a comfortable driving position.

Both mirrors can be manually folded by pulling them toward the vehicle. This feature may be useful when going through a car wash or a confined space. Push the mirrors away from the vehicle to the normal position before driving.

OnStar® System

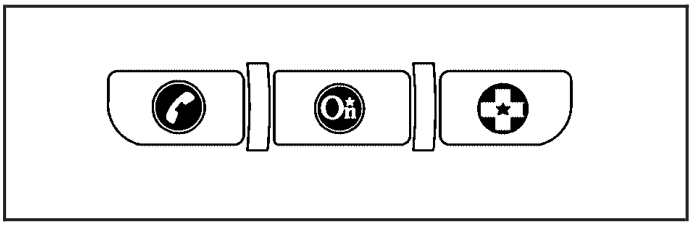

OnStar® uses several innovative technologies and live advisors to provide you with a wide range of safety, security, information, and convenience services. If your airbags deploy, the system is designed to make an automatic call to OnStar® Emergency advisors who can request emergency services be sent to your location. If you lock your keys in the vehicle, call OnStar® at 1-888-4-ONSTAR and they can send a signal to unlock your doors. If you need roadside assistance, press the OnStar® button and they can contact Roadside Service for you.

Downloaded from www.Manualslib.com manuals search engine

OnStar® service is provided to you subject to the OnStar® Terms and Conditions. You may cancel your OnStar® service at any time by contacting OnStar® as provided below. A complete OnStar® Owners Guide and the OnStar® Terms and Conditions are included in the vehicle's OnStar® Subscriber glove box literature. For more information, visit onstar.com or onstar.ca, contact OnStar® at 1–888–4–ONSTAR (1–888–466–7827) or TTY 1–877–248–2080, or press the OnStar® button to speak with an OnStar® advisor 24 hours a day, 7 days a week.

Not all OnStar® features are available on all vehicles. To check if your vehicle is equipped to provide the services described below, or for a full description of OnStar® services and system limitations, see the OnStar® Owner's Guide in your glove box or visit onstar.com.

OnStar® Services

For new vehicles with OnStar®, the Safe & Sound Plan, or the Directions & Connections® Plan is included for one year from the date of purchase. You can extend this plan beyond the first year, or upgrade to the Directions & Connections® Plan. For more information, press the OnStar® button to speak with an advisor. Some OnStar® services (such as Remote Door Unlock or Stolen Vehicle Location Assistance) may not be available until you register with OnStar®.

Downloaded from www.Manualslib.com manuals search engine

Available Services with Safe & Sound® Plan

- Automatic Notification of Airbag Deployment
- Advanced Automatic Crash Notification (AACN) (If equipped)
- Link to Emergency Services
- Roadside Assistance
- Stolen Vehicle Location Assistance
- AccidentAssist
- Remote Door Unlock/Vehicle Alert
- OnStar® Vehicle Diagnostics
- GM® Goodwrench® On Demand Diagnostics
- OnStar® Hands-Free Calling with 30 complimentary minutes
- OnStar® Virtual Advisor (U.S. Only)

Available Services included with Directions & Connections® Plan

- All Safe and Sound Plan Services
- Driving Directions - Advisor delivered or OnStar® Turn-by-Turn Navigation (If equipped)
- RideAssist
- Information and Convenience Services

OnStar® Hands-Free Calling

OnStar® Hands-Free Calling allows eligible OnStar® subscribers to make and receive calls using voice commands. Hands-Free Calling is fully integrated into the vehicle, and can be used with OnStar® Pre-Paid Minute Packages. Hands-Free Calling may also be linked to a Verizon Wireless service plan in the U.S. or a Bell Mobility service plan in Canada, depending on eligibility. To find out more, refer to the OnStar® Owners Guide in the vehicle's glove box, visit www.onstar.com or www.onstar.ca, or speak with an OnStar® advisor by pressing the OnStar® button or calling 1-888-4-ONSTAR (1-888-466-7827).

OnStar® Virtual Advisor

OnStar® Virtual Advisor is a feature of OnStar® Hands-Free Calling that uses your minutes to access location-based weather, local traffic reports, and stock quotes. By pressing the phone button and giving a few simple voice commands, you can browse through the various topics. See the OnStar® Owners Guide for more information (Only available in the continental U.S.).

Downloaded from www.Manualslib.com manuals search engine

OnStar® Steering Wheel Controls

Your vehicle may have a Talk/Mute button that can be used to interact with OnStar® Hands-Free Calling. See *Audio Steering Wheel Controls on page 185* for more information.

On some vehicles, you may have to hold the button for a few seconds and give the command "ONSTAR" in order to activate the OnStar® Hands-Free Calling feature.

On some vehicles, the mute button can be used to dial numbers into voicemail systems, or to dial phone extensions. See the OnStar® Owner's Guide for more information.

How OnStar® Service Works

In order to provide you with OnStar® services, your vehicle's OnStar® system has the capability of recording and transmitting vehicle information. This information is automatically sent to an OnStar® Call Center at the time of an OnStar® button press, Emergency button press or if your airbags or AACN system deploys. The vehicle information usually includes your GPS location and, in the event of a crash, additional information regarding the accident that your vehicle has been involved in (e.g. the direction from which your vehicle was hit).

When you use the Virtual Advisor feature of OnStar® Hands-Free Calling, your vehicle also sends OnStar® your GPS location so that we can provide you with location-based services.

OnStar® service cannot work unless your vehicle is in a place where OnStar® has an agreement with a wireless service provider for service in that area. OnStar® service also cannot work unless you are in a place where the wireless service provider OnStar® has hired for that area has coverage, network capacity and reception when the service is needed, and technology that is compatible with the OnStar® service. Not all services are available everywhere, particularly in remote or enclosed areas, or at all times.

OnStar® service that involves location information about your vehicle cannot work unless GPS satellite signals are unobstructed and available in that place as well.

Downloaded from www.Manualslib.com manuals search engine

Your vehicle must have a working electrical system (including adequate battery power) for the OnStar® equipment to operate. There are other problems OnStar® cannot control that may prevent OnStar® from providing OnStar® service to you at any particular time or place. Some examples are damage to important parts of your vehicle in an accident, hills, tall buildings, tunnels, weather or wireless phone network congestion.

Your Responsibility

You may need to increase the volume of your radio to hear the OnStar® advisor. If the light next to the OnStar® buttons is red, this means that your system is not functioning properly and should be checked by a dealer. If the light appears clear (no light is appearing), your OnStar® subscription has expired. You can always press the OnStar® button to confirm that your OnStar® equipment is active.

Storage Areas

Glove Box

To open the glove box, lift up on the lever. Use the key to lock and unlock.

Cupholder(s)

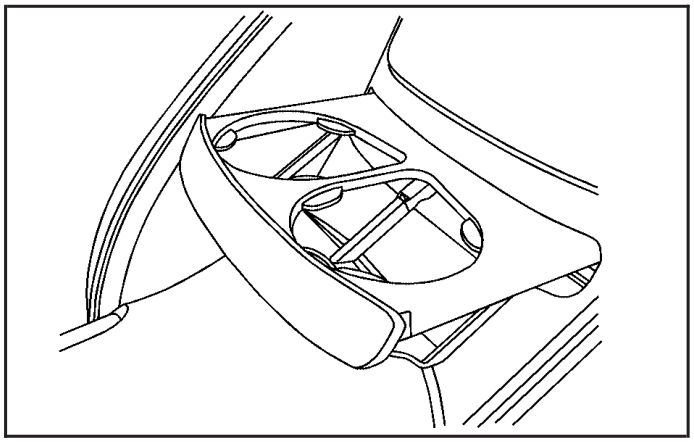

There are two cupholders located in the center console, press and release to extend forward.

Downloaded from www.Manualslib.com manuals search engine

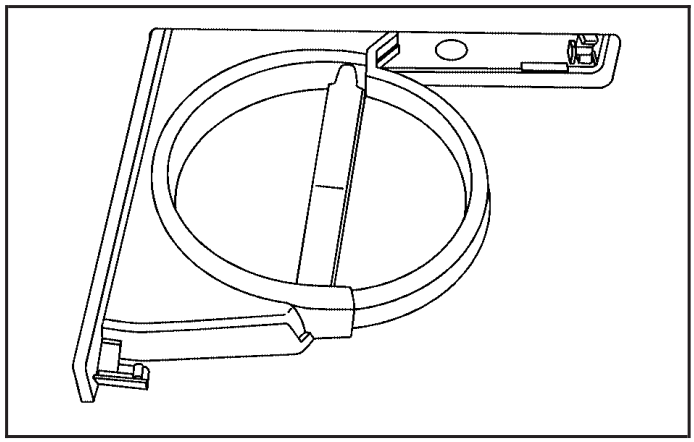

Your vehicle has a cupholder on the passenger side of the center console. To access it, press and release the forward section of the cupholder.

Center Console Storage Area

There is also an upright center console storage area between the seatbacks. To open the storage area, press and release the button near the top so it extends out. Then, turn the button in either direction to unlatch the lid and pull the console lid down. Press the release button back in after you close the lid.

Convertible Top

For care and cleaning of the convertible top, see *Convertible Top on page 320* under “Service and Appearance Care”. High pressure car washes may cause water to enter the vehicle.

The following procedures explain the proper operation of the manual convertible top.

Downloaded from www.Manualslib.com manuals search engine

The parts of the manual convertible top that are used when lowering and raising it are:

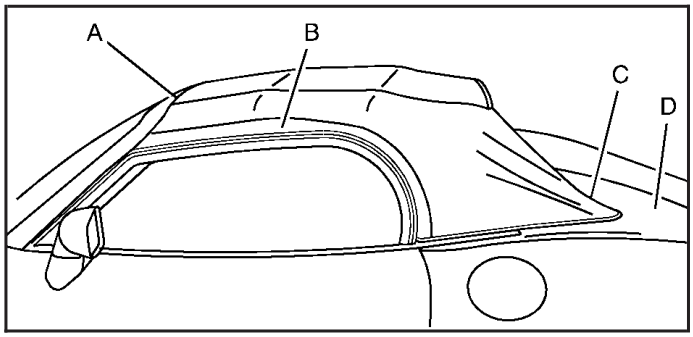

A. Front Edge
B. Side Edge
C. Rear Buttresses
D. Trunk

Notice: **Leaving the convertible top down and exposing the interior of your vehicle to outdoor conditions may cause damage. Always close the convertible top if leaving your vehicle outdoors.**

Notice: **Lowering the convertible top when there are objects in the storage area could damage it or break the glass rear window. Always verify that no objects are in the storage area before lowering the convertible top.**

Notice: **Lowering the top if it is damp, wet, or dirty can cause stains, mildew, and damage to the inside of your vehicle. Dry off the top before lowering it.**

Notice: **If you lower the top on your vehicle in cold weather (0°F/-18°C or lower), you may damage top components. Do not lower the top in cold weather.**

Notice: **If you raise or lower the convertible top while the vehicle is in motion, you could damage the top or the top mechanism. The repairs would not be covered by your warranty. Always put an automatic transmission in PARK (P) or a manual transmission in FIRST (1) or REVERSE (R), turn the ignition off and engage the parking brake before raising or lowering the convertible top.**

Downloaded from www.Manualslib.com manuals search engine

⚠ CAUTION:

Moving parts of the convertible top can be dangerous. People can be injured by the convertible top and its mechanism. Keep people away from your vehicle when you are lowering or raising the top.

Lowering the Manual Convertible Top

1. Park on a level surface and set the parking brake. Shift an automatic transmission into PARK (P). Shift a manual transmission into FIRST (1) or REVERSE (R).
2. Make sure the ignition is turned off.
3. Push the trunk release button located in the glove box, or on the remote keyless entry, if equipped.
4. Lift the trunk.

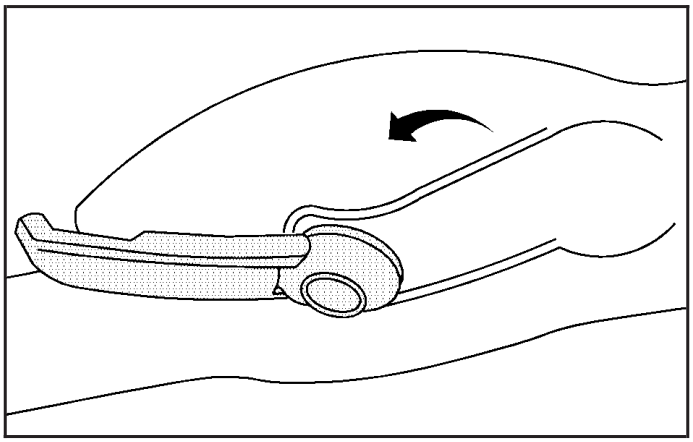

5. The convertible top front latch, located above the inside rearview mirror, must be unlatched. Pull the latch down and turn it counterclockwise to unlatch it.

   Leave the latch open and turned to prevent damage.

Downloaded from www.Manualslib.com manuals search engine

6. Pull rearward on the side edge (B) of the convertible top and pull it off of the windshield frame.
7. Push the convertible top down into the trunk (D).

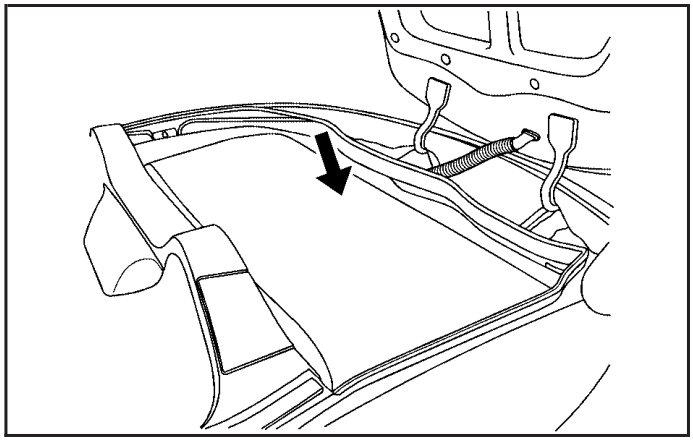

8. After the top is stored, apply one even push, as shown, on the convertible top to ensure that the top is fully retracted and securely stored.
9. Close the trunk (D) by pressing down on it with a swift, firm motion.

Do not operate rear defogger when convertible top is down.

A clear Mylar® protective film has been installed at the factory on the trunk lid surface under the convertible top buttresses. This film is designed to help prevent paint damage to the trunk lid. Do not remove this protective film. It is intended to remain permanently affixed to the trunk lid surface.

Raising the Manual Convertible Top

1. Park on a level surface, set the parking brake firmly and shift an automatic transmission into PARK (P). Shift a manual transmission into FIRST (1) or REVERSE (R).
2. Make sure the ignition is turned off, and lower the windows.
3. Push the trunk release button located in the glove box, or on the remote keyless entry, if equipped.
4. Lift the trunk.

Downloaded from www.Manualslib.com manuals search engine

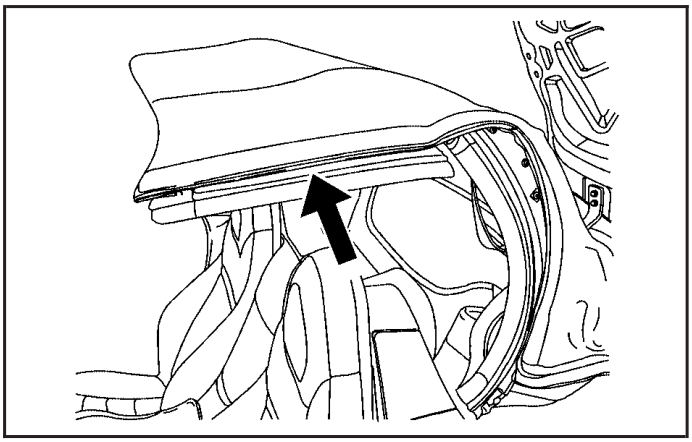

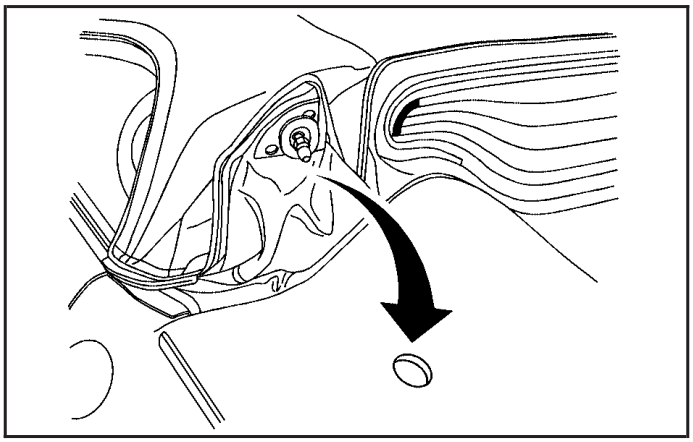

5. Pull the convertible top forward by firmly gripping the side edge (B) and applying a brisk upward and forward motion to get the top in the full-up position.
6. Pull the front edge (A) of the convertible top forward from the outside of the vehicle, or push the front edge (A) of the convertible top forward from the inside of the vehicle.
7. Turn the top front latch handle clockwise to latch the convertible top.
8. Close the trunk (D) by pushing it down with a swift, firm motion.
9. At the rear edge of the convertible top, press down on the two buttresses (C) to latch them into the top of the trunk.

A clear Mylar® protective film has been installed at the factory on the trunk lid surface under the convertible top buttresses. This film is designed to help prevent paint damage to the trunk lid. Do not remove this protective film. It is intended to remain permanently affixed to the trunk lid surface.

Downloaded from www.Manualslib.com manuals search engine

NOTES

Downloaded from www.Manualslib.com manuals search engine

Section 3 Instrument Panel

Instrument Panel Overview 108
Hazard Warning Flashers 110
Other Warning Devices 110
Horn 110
Tilt Wheel 111
Turn Signal/Multifunction Lever 111
Turn and Lane-Change Signals 112
Headlamp High/Low-Beam Changer 112
Flash-to-Pass 113
Windshield Wipers 113
Windshield Washer 114
Cruise Control 115
Headlamps 118
Headlamps on Reminder 119
Daytime Running Lamps (DRL) 119
Fog Lamps 120
Instrument Panel Brightness 120
Entry/Exit Lighting 120
Mirror Reading Lamps 120
Battery Run-Down Protection 121
Accessory Power Outlet(s) 121
Ashtray(s) and Cigarette Lighter 122

Climate Controls 122
Climate Control System 122
Outlet Adjustment 126

Warning Lights, Gages, and Indicators 127
Instrument Panel Cluster 128
Speedometer and Odometer 129
Tachometer 129
Safety Belt Reminder Light 130
Passenger Safety Belt Reminder Light 130
Airbag Readiness Light 131
Passenger Airbag Status Indicator 132
Charging System Light 134
Brake System Warning Light 134
Anti-Lock Brake System Warning Light 135
Electronic Stability Control (ESC)/ Traction Control System (TCS) Indicator/Warning Light (2.0L Engine Only) 136
Engine Coolant Temperature Warning Light 137
Low Coolant Warning Light 138
Malfunction Indicator Lamp 138

Downloaded from www.Manualslib.com manuals search engine

Section 3 Instrument Panel

Oil Pressure Light 142
Security Light 143
Reduced Engine Power Light
(2.4L Engine Only) 143
Highbeam On Light 143
Trunk Ajar Light 144
Service Vehicle Soon Light
(2.4L Engine Only) 144
Fuel Gage 144
Low Fuel Warning Light 145

Driver Information Center (DIC) 145
DIC Operation and Displays 146
DIC Warnings and Messages 148
DIC Vehicle Personalization 152

Audio System(s) 157
Setting the Time (Without Date Display) 158
Setting the Time (With Date Display) 159
Radio with CD (Base) 161
Radio with CD (MP3) 166
Using an MP3 176
XM Radio Messages 183
Theft-Deterrent Feature 185
Audio Steering Wheel Controls 185
Radio Reception 186
Care of Your CDs 187
Care of the CD Player 187
Fixed Mast Antenna 187
XM™ Satellite Radio Antenna System 187

Downloaded from www.Manualslib.com manuals search engine

✍ NOTES

Downloaded from www.Manualslib.com manuals search engine

Instrument Panel Overview

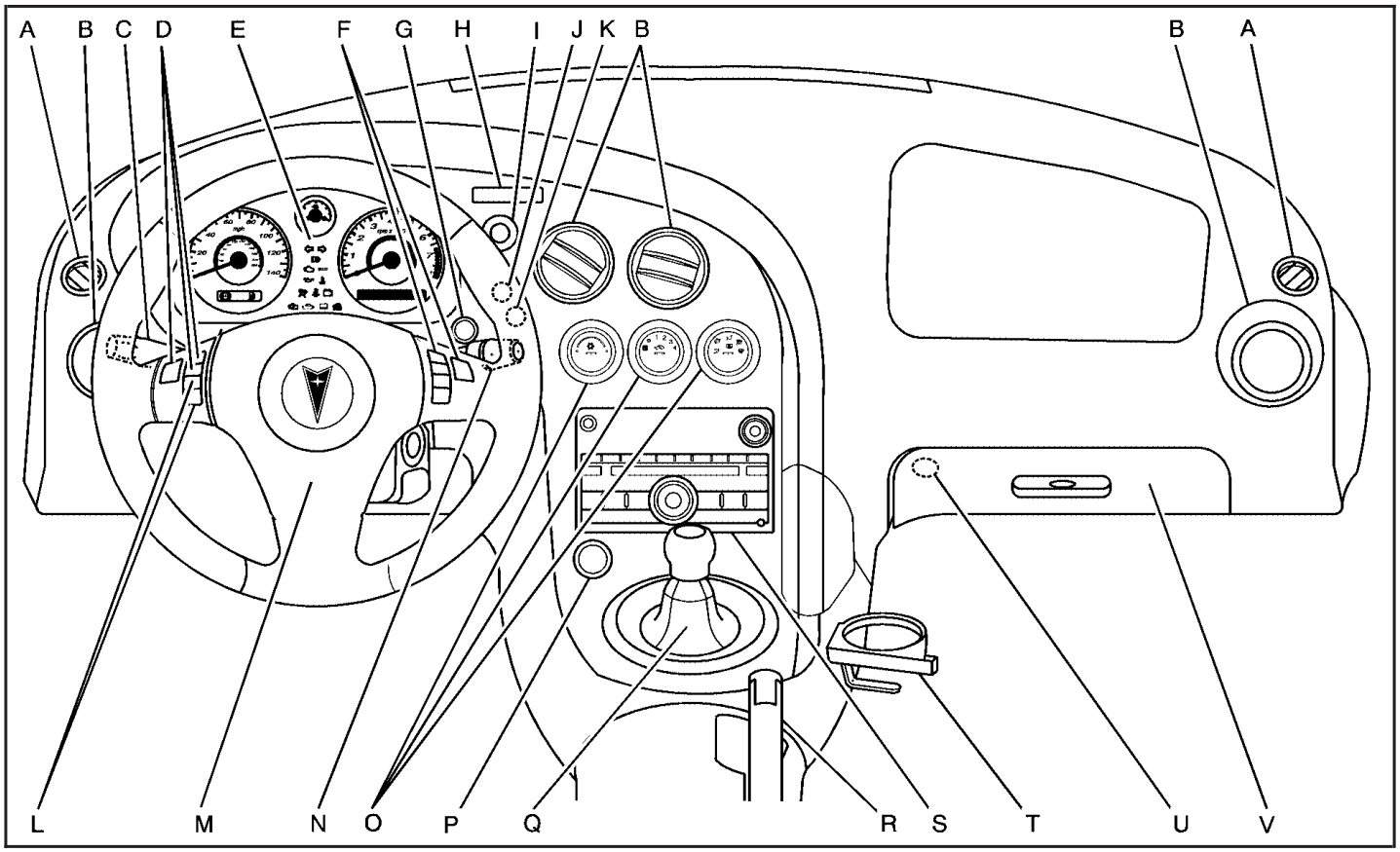

Downloaded from www.Manualslib.com manuals search engine

The main components of your instrument panel are the following:

A. Side Window Outlets. See *Climate Control System on page 122*.
B. Air Outlets. See *Outlet Adjustment on page 126*.
C. Turn Signal/Multifunction Lever. See *Turn Signal/Multifunction Lever on page 111*.
D. Cruise Control Buttons (If Equipped). See *Cruise Control on page 115*.
E. Instrument Panel Cluster. See *Instrument Panel Cluster on page 128*.
F. Audio Steering Wheel Controls (If Equipped). See *Audio Steering Wheel Controls on page 185*.
G. Instrument Panel Brightness Control. See *Instrument Panel Brightness on page 120*.
H. Passenger Air Bag Status Indicator. See *Passenger Airbag Status Indicator on page 132*.
I. Hazard Warning Flashers Button. See *Hazard Warning Flashers on page 110*.
J. Fog Lamp Button (If Equipped). See *Fog Lamps on page 120*.
K. Electronic Stability Control (ESC)/Traction Control System (TCS) Button (If Equipped). See *Electronic Stability Control on page 200* or *Traction Control System (TCS) on page 198*.
L. Driver Information Center (DIC) Controls (If Equipped). See *Driver Information Center (DIC) on page 145*.
M. Horn. See *Horn on page 110*.
N. Windshield Wiper/Washer Controls. See *Windshield Wipers on page 113* and *Windshield Washer on page 114*.
O. Climate Controls. See *Climate Control System on page 122*.
P. Cigarette Lighter (If Equipped). Accessory Power Outlet (If Equipped). See *Ashtray(s) and Cigarette Lighter on page 122* and *Accessory Power Outlet(s) on page 121*.
Q. Shift Lever. See *Manual Transmission Operation on page 85*. See *Automatic Transmission Operation on page 82* (if equipped with automatic transmission).
R. Parking Brake Lever. See *Parking Brake on page 86*.
S. Audio System. See *Audio System(s) on page 157*.
T. Cupholder. See *Cupholder(s) on page 98*.
U. Trunk Release. See *Trunk on page 68*.
V. Glove Box. See *Glove Box on page 98*.

Downloaded from www.Manualslib.com manuals search engine

Hazard Warning Flashers

Your hazard warning flashers let you warn others. They also let police know you have a problem. Your front and rear turn signal lamps will flash on and off.

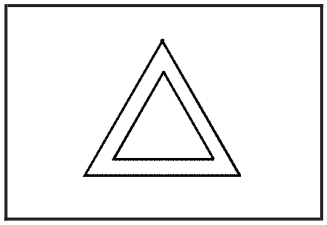

The hazard warning flasher button is located in the center of the instrument panel.

Your hazard warning flashers work no matter what position your key is in, and even if the key is not in the ignition switch.

Press the button to make the front and rear turn signal lamps flash on and off. Press the button again to turn the flashers off.

When the hazard warning flashers are on, your turn signals will not work.

Other Warning Devices

If you carry reflective triangles, you can set them up at the side of the road about 300 feet (100 m) behind your vehicle.

Horn

To sound the horn, press the center pad on the steering wheel.

Downloaded from www.Manualslib.com manuals search engine

Tilt Wheel

A tilt wheel allows you to adjust the steering wheel before you drive. You can raise the steering wheel to the highest level to give your legs more room when you enter and exit the vehicle.

The lever that allows you to tilt the steering wheel is located on the left side of the steering column.

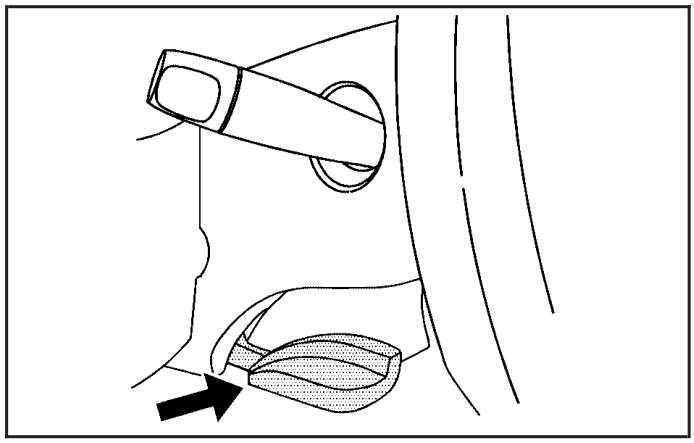

To tilt the wheel, pull down the lever. Then move the wheel to a comfortable position, pull up the lever to lock the wheel in place.

Turn Signal/Multifunction Lever

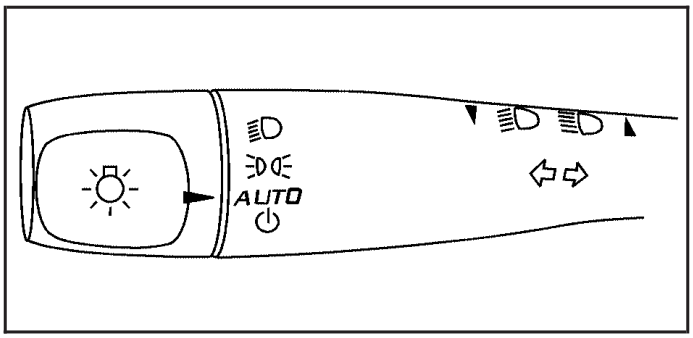

The lever on the left side of the steering column includes the following:

- Turn and Lane-Change Signals. See *Turn and Lane-Change Signals on page 112*.
- Headlamp High/Low-Beam Changer. See *Headlamp High/Low-Beam Changer on page 112*.
- Flash-to-Pass. See *Flash-to-Pass on page 113*.
- Exterior Lamp Control. See *Headlamps on page 118*.

Downloaded from www.Manualslib.com manuals search engine

Turn and Lane-Change Signals

The turn signal has two upward (for right) and two downward (for left) positions. These positions allow you to signal a turn or a lane change.

To signal a turn, move the lever all the way up or down. When the turn is finished, the lever will return automatically.

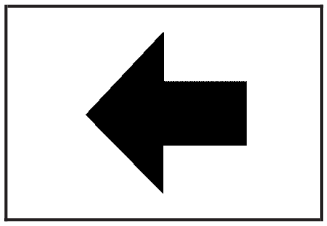

An arrow on the instrument panel cluster will flash in the direction of the turn or lane change.

To signal a lane change, raise or lower the lever until the arrow starts to flash. Hold it there until you complete your lane change. The lever will return by itself when you release it.

As you signal a turn or a lane change, if the arrows flash rapidly, a signal bulb may be burned out and other drivers will not see your turn signal. If a bulb is burned out, replace it to help avoid an accident.

If the arrows do not go on at all when you signal a turn, check the fuse. See *Fuses and Circuit Breakers on page 326*.

Headlamp High/Low-Beam Changer

To change the headlamps from low beam to high beam, push the turn signal lever away from you.

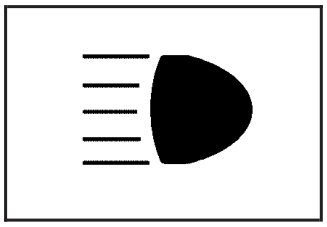

When the high beams are on, this light on the instrument panel cluster will also be on.

To change the headlamps from high beam to low beam, pull the turn signal lever toward you.

Downloaded from www.Manualslib.com manuals search engine

Flash-to-Pass

This feature lets you use your high-beam headlamps to signal a driver in front of you that you want to pass.

To use it, pull the turn signal/multifunction lever toward you until the high-beam headlamps come on, then release the lever to turn them off.

Windshield Wipers

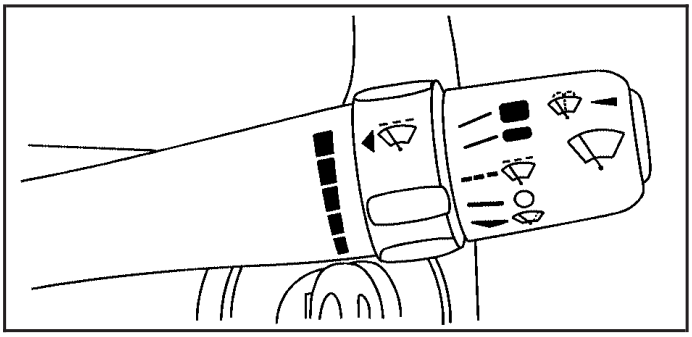

Use this lever, located on the right side of the steering wheel, to operate the windshield wipers.

(Off): Move the lever to this position to turn off the windshield wipers.

(Intermittent; Speed Sensitive Wipers): Move the lever to this position for intermittent or speed sensitive operation. When you select this position, the delay will vary depending on the vehicles speed, as well as the manually selected delay.

(Delay): When the lever is in the intermittent position, turn the intermittent adjust band with this symbol on it up or down to set for a shorter or longer delay between wipes. To the left of the adjust band are bars, increasing in size from bottom to top, that indicate the frequency of the wipes. Smaller bars mean the wipers movement is less frequent. Larger bars mean the movement is more frequent.

(Low Speed): Move the lever up to the first setting past intermittent, for steady wiping at low speed.

(High Speed): Move the lever up to the second setting past intermittent, for wiping at high speed.

Downloaded from www.Manualslib.com manuals search engine

(Mist): Move the lever all the way down to this position for a single wiping cycle. Hold it there until the windshield wipers start; then let go. The windshield wipers will stop after one wiping cycle. If you want additional wiping cycles, hold the lever down longer.

Damaged wiper blades may prevent you from seeing well enough to drive safely. To avoid damage, be sure to clear ice and snow from the wiper blades before using them.

If the wiper blades are frozen to the windshield, carefully loosen or thaw them. If your blades do become damaged, get new blades or blade inserts.

Heavy snow or ice can overload your wiper motor. A circuit breaker will stop the motor until it cools. Clear away snow or ice to prevent an overload. If the motor gets stuck, turn the wipers off, clear away the snow or ice, and then turn the wipers back on.

As an added safety feature, if the wipers are on for more than 15 seconds, the vehicle's headlamps will turn on automatically. They will turn off 15 seconds after the wipers are turned off.

Windshield Washer

To wash the windshield, press the button at the end of the lever until the washers begin.

⚠ CAUTION:

In freezing weather, do not use your washer until the windshield is warmed. Otherwise the washer fluid can form ice on the windshield, blocking your vision.

When you release the button, the washers will stop, but the wipers will continue to wipe about three times or will resume the previous speed.

Downloaded from www.Manualslib.com manuals search engine

Cruise Control

If your vehicle has cruise control, it can maintain a speed of about 25 mph (40 km/h) or more without keeping your foot on the accelerator. This can really help on long trips. Cruise control does not work at speeds below 25 mph (40 km/h).

⚠ CAUTION:

Cruise control can be dangerous where you cannot drive safely at a steady speed. So, do not use your cruise control on winding roads or in heavy traffic.

Cruise control can be dangerous on slippery roads. On such roads, fast changes in tire traction can cause excessive wheel slip, and you could lose control. Do not use cruise control on slippery roads.

Setting Cruise Control

⚠ CAUTION:

If you leave your cruise control on when you are not using cruise, you might hit a button and go into cruise when you do not want to. You could be startled and even lose control. Keep the cruise control switch off until you want to use cruise control.

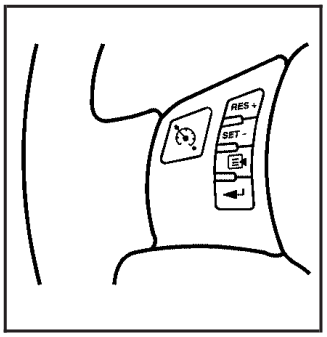

The cruise control buttons are located on the left side of the steering wheel.

(On/Off): Press this button to turn the cruise control system on and off.

Downloaded from www.Manualslib.com manuals search engine

RES+ (Resume): Press this button to resume a set speed and to accelerate the speed.

SET– (Set): Press this button to set a speed and to decrease the speed.

To set a speed do the following:

1. Press the on/off button to turn cruise control on. The indicator light on the button will come on.
2. Get to the speed you want.
3. Press the SET– control button and release it. The CRUISE ENGAGED message will appear on the Driver Information Center (DIC) to show the system is engaged.
4. Take your foot off the accelerator pedal.

When you apply the brakes or depress the clutch, the cruise control will shut off.

Resuming a Set Speed

Suppose you set your cruise control at a desired speed and then you apply the brake. This disengages the cruise control. To return to your previously set speed, you do not need to go through the set process again. Once you are going about 25 mph (40 km/h) or more, you can press the RES+ button briefly.

This will take you back up to your previously chosen speed and stay there.

Increasing Speed While Using Cruise Control

There are two ways to increase speed.

1. Disengage the cruise control by applying the brake pedal but do not turn it off. Accelerate to a higher speed and reset the cruise control.
2. If the cruise control system is already engaged, press the RES+ button. Press it until you get up to the speed you want, and then release the button. To increase your speed in very small amounts, press the RES+ button briefly and then release it. Each time you do this, your vehicle will go about 1 mph (1.6 km/h) faster.

Downloaded from www.Manualslib.com manuals search engine

Reducing Speed While Using Cruise Control

If the cruise control system is already engaged,

- Push and hold the SET– part of the button until you reach the lower speed desired, then release it.
- To slow down in very small amounts, push the SET– part of the button briefly. Each time this is done, your vehicle will go about 1 mph (1.6 km/h) slower.

Passing Another Vehicle While Using Cruise Control

Use the accelerator pedal to increase your speed. When you take your foot off the pedal, your vehicle will slow down to the cruise control speed you set earlier.

Using Cruise Control on Hills

How well your cruise control will work on hills depends upon the vehicle speed, load, and the steepness of the hills. When going up steep hills, you might have to step on the accelerator pedal to maintain the vehicle speed. When going downhill, you might have to brake or shift to a lower gear to keep the vehicle speed down.
Of course, applying the brake turns off the cruise control. Many drivers find this to be too much trouble and do not use cruise control on steep hills.

Ending Cruise Control

To end cruise control, step lightly on the brake pedal or the clutch pedal if your vehicle has a manual transmission.

Stepping on the brake pedal or clutch pedal will only end the current cruise control session. Press the cruise control on/off button to turn the system completely off.

Erasing Speed Memory

When you turn off the cruise control or the ignition, the cruise control set speed memory is erased.

Downloaded from www.Manualslib.com manuals search engine

Headlamps

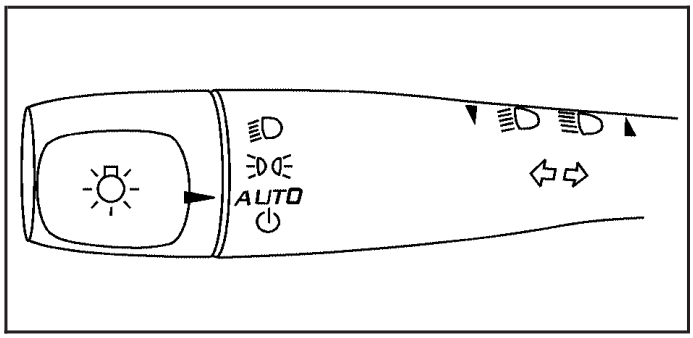

The lever on the left side of the steering column operates the exterior lamps.

The exterior lamp switch has the following four positions:

(Headlamps): This position turns on the headlamps, parking lamps, and taillamps.

(Parking Lamps): This position turns on the parking lamps and taillamps only.

AUTO (Automatic Headlamp System): This position automatically turns on the Daytime Running Lamps (DRL) during daytime, and the headlamps, parking lamps, and taillamps at night.

(Off/On): This position is an Off/On switch for the Automatic Headlamp System. In Canada, this applies to vehicles with an automatic transmission set to PARK (P) and manual transmission vehicles with the parking brake engaged.

When operating in AUTO, a brief turn of the switch to off/on will turn off the Automatic Headlamp System. An AUTO LIGHTS OFF message will display on the Driver Information Center (DIC), if the vehicle has one, and a chime will sound. Turning the switch to off/on again will turn the Automatic Headlamp System back on. An AUTO LIGHTS ON message will display on the Driver Information Center (DIC).

The Automatic Headlamp System is always turned on at the beginning of an ignition cycle for vehicles with manual transmission. When the parking brake is engaged, the automatic headlamps will turn off. For vehicles with an automatic transmission, when the shift lever is shifted out of PARK (P), the Automatic Headlamp System will turn on. Shifting the lever back to PARK (P) will turn off the automatic headlamp system for vehicles with an automatic transmission.

Downloaded from www.Manualslib.com manuals search engine

Headlamps on Reminder

If you open the driver's door with the ignition off and the lamps on, you will hear a warning chime.

Daytime Running Lamps (DRL)

Daytime Running Lamps (DRL) can make it easier for others to see the front of your vehicle during the day. DRL can be helpful in many different driving conditions, but they can be especially helpful in the short periods after dawn and before sunset. Fully functional daytime running lamps are required on all vehicles first sold in Canada.

Your vehicle has a light sensor on top of the instrument panel that helps control the DRL. Make sure it is not covered or the headlamps will come on when they are not needed.

The DRL system makes both low beam headlamps turn on at reduced intensity when the following conditions are met:

- The ignition is on.
- The exterior lamp control is turned to AUTO.
- The light sensor detects daytime light.
- The shift lever is not in PARK (P).

While the DRL system is on, the taillamps, sidemarker lamps, and instrument panel lights will not be on.

The DRL system turns off on U.S. vehicles by using the on/off switch for one ignition cycle, if the vehicle is in the PARK (P) position, or if the vehicle speed is less than 5 mph (8 km h) after the vehicle is started.

For vehicles first sold in Canada the DRL system will turn off when a automatic transmission vehicle is in the PARK (P) position or the park brake is set on a manual transmission vehicle and the vehicle speed is less than 8 mph (13 km h).

As with any vehicle, you should turn on the regular headlamp system when it is needed.

Downloaded from www.Manualslib.com manuals search engine

Fog Lamps

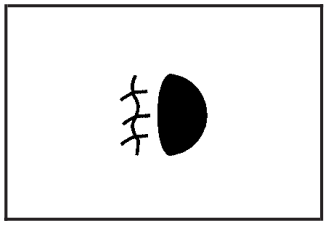

If your vehicle has a fog lamp button, it is located on the instrument panel, to the right of the steering wheel.

The ignition must be on to turn your fog lamps on.

Push the button to turn the fog lamps on. An indicator light on the fog lamp button will come on when the fog lamps are on. Push the button again to turn the fog lamps off.

The parking lamps will automatically turn on and off when the fog lamps are turned on and off.

The fog lamps will turn off while the high-beam headlamps are turned on.

Some localities have laws that require the headlamps to be on along with the fog lamps.

Instrument Panel Brightness

Instrument Panel Brightness: The control for this feature is located on the instrument panel to the right of the steering wheel.

Turn the knob clockwise to brighten the lights or counterclockwise to dim them.

Entry/Exit Lighting

The lamps inside your vehicle will go on when you open any door. These lamps will fade out after about 20 seconds after all of the doors have been closed or when the ignition is turned on. These lamps will also go on when you press the trunk release, unlock symbol button or the horn symbol on the keyless entry system transmitter.

The lamps inside your vehicle will stay on for about 20 seconds after your key is removed from the ignition to provide an illuminated exit.

Mirror Reading Lamps

Your vehicle has reading lamps on the rearview mirror. Push the button to turn the reading lamps on and off.

Downloaded from www.Manualslib.com manuals search engine

Battery Run-Down Protection

Your vehicle has a battery saver feature designed to protect your vehicle's battery.

When any interior lamp is left on and the ignition is turned off, the battery rundown protection system will automatically turn the lamp off after 20 minutes. This will avoid draining the battery.

Accessory Power Outlet(s)

The accessory power outlet can be used to connect electrical equipment such as a cellular phone or CB radio.

The accessory power outlet is located on the instrument panel, below the radio.

To use the outlet, remove the cover. When not in use, always cover the outlet with the protective cap.

Notice: **Leaving electrical equipment plugged in for an extended period of time while the vehicle is off will drain the battery. Power is always supplied to the outlets. Always unplug electrical equipment when not in use and do not plug in equipment that exceeds the maximum 20 ampere rating.**

Certain electrical accessories may not be compatible with the accessory power outlet and could result in blown vehicle or adapter fuses. If you experience a problem, see your dealer for additional information on the accessory power outlet.

Notice: **Adding any electrical equipment to your vehicle may damage it or keep other components from working as they should. The repairs would not be covered by your warranty. Do not use equipment exceeding maximum amperage rating of 20 amperes. Check with your dealer before adding electrical equipment.**

When adding electrical equipment, be sure to follow the installation instructions included with the equipment.

Notice: **Improper use of the power outlet can cause damage not covered by your warranty. Do not hang any type of accessory or accessory bracket from the plug because the power outlets are designed for accessory power plugs only.**

Downloaded from www.Manualslib.com manuals search engine

Ashtray(s) and Cigarette Lighter

Your vehicle may have an ashtray and cigarette lighter. To use the lighter, located on the instrument panel below the radio, push it in all the way and let go. When it is ready, it will pop back out by itself.

Notice: **Holding a cigarette lighter in while it is heating will not allow the lighter to back away from the heating element when it is hot. Damage from overheating may occur to the lighter or heating element, or a fuse could be blown. Do not hold a cigarette lighter in while it is heating.**

Notice: **If you put papers, pins, or other flammable items in the ashtray, hot cigarettes or other smoking materials could ignite them and possibly damage your vehicle. Never put flammable items in the ashtray.**

Climate Controls

Climate Control System

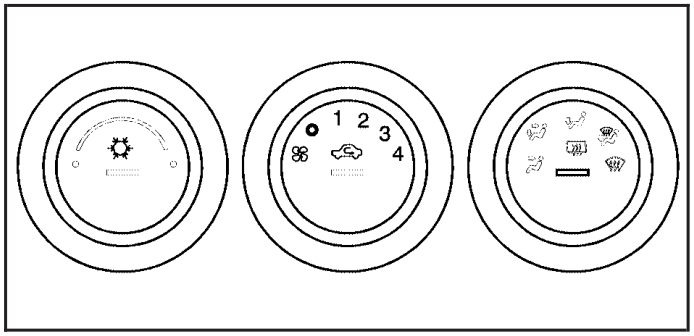

Climate Control System with Air Conditioning shown, Climate Control System without Air Conditioning similar

With this system you can control the heating and ventilation of your vehicle. You may also be able to control the cooling of your vehicle, if your vehicle has air conditioning. The in-between mode will be a combination of the two modes that the control is selected between.

Downloaded from www.Manualslib.com manuals search engine

Temperature: Turn the left knob on the control panel to adjust the temperature of the air in the vehicle. Turn the knob clockwise or counterclockwise to increase or decrease the temperature.

(Air Conditioning): If your vehicle has air conditioning press the left knob on the control panel to turn the air conditioning system on or off. An indicator light on the button will come on to let you know the air conditioning is activated. When the system is on, this setting cools and dehumidifies the air entering your vehicle.

The air conditioning will not function if the fan is turned off. If air conditioning is selected with fan off, the LED light will flash three times and then turn off.

You may notice a slight change in engine performance when the air conditioning compressor turns off and turns on again. This is normal. The system is designed to make adjustments to help with fuel economy while still maintaining the selected temperature.

Air conditioning does not operate at temperature below 40°F (4°C). In temperatures above 40°F (4°C), the air conditioning cannot be turned off in defrost, floor/defog, and recirculation modes because it helps to remove moisture from the vehicle. It also helps to keep the windows clear.

On hot days, open the windows to let the hot inside air escape; then close them. This helps reduce the time it takes for your vehicle to cool down. It also helps the system to operate more efficiently.

For quick cool down on hot days, do the following:

1. Select the vent mode.
2. Select recirculation mode.
3. Select the air conditioning to on.
4. Select the coolest temperature.
5. Select the highest fan speed.

Using these settings together for long periods of time may cause the air inside of your vehicle to become too dry. To prevent this from happening, after the air in your vehicle has cooled, turn the recirculation mode off.

Downloaded from www.Manualslib.com manuals search engine

(Fan): Turn the center knob on the control panel to control the fan speed. Turn the knob clockwise or counterclockwise to increase or decrease the fan speed.

(Off): Turn the center knob to this position to turn the fan off.

(Recirculation): Press the center knob on the control panel to recirculate air inside the vehicle and prevent outside air from coming in. It can be used to prevent outside odors from entering your vehicle and cool the air inside your vehicle more quickly. Press this button to turn the recirculation mode on or off. An indicator light on the button will come on to let you know the recirculation mode is activated.

Recirculation is available in the bi-level and vent modes. If recirculation is selected in either floor/heat, floor/defog, or defrost mode, the LED light will flash three times indicating it is not available in that mode.

The right knob on the control panel is used to direct the airflow inside your vehicle. Turn the knob to select one of the following modes:

(Vent): Turn the right knob on the control panel to this mode to direct air to the instrument panel outlets.

(Bi-Level): Turn the right knob on the control panel to this mode to direct air to the instrument panel outlets, and the remaining air to the floor outlets and the defroster and side window outlets. Cooler air is directed to the upper outlets and warmer air to the floor outlets.

(Floor): Turn the right knob on the control panel to this mode to direct most of the air to the floor outlets. The remaining air is directed to the side window and defroster outlets. If there is little or no airflow on the passenger side, make sure that the carpet covering is tucked under the floor outlets.

Downloaded from www.Manualslib.com manuals search engine

Defogging and Defrosting

Fog on the inside of windows is a result of high humidity (moisture) condensing on the cool window glass. This can be minimized if the climate control system is used properly. There are two modes to clear fog or frost from your windshield and side windows. Use the defog mode to clear the windows of fog or moisture and warm the passengers. Use the defrost mode to remove fog or frost from the windshield more quickly. For best results, clear all snow and ice from the windshield before defrosting. Use a temperature setting that provides warm air. The warmer the air the quicker the windows will clear.

To prevent fogging on the inside of the windows in modes other than floor/defog and defrost, make sure the air conditioning compressor, if the vehicle has one, is on and recirculation mode is off.

(Floor/Defog): Turn the right knob on the control panel to this mode to direct the air to the windshield, the side window outlets, and to the floor outlets. When you select this mode, the system runs the air conditioning compressor unless the outside temperature is near freezing or below.

(Defrost): Turn the right knob on the control panel to this mode to direct most of the air to the windshield, and the side window outlets. When you select this mode, the system runs the air conditioning compressor unless the outside temperature is near or below freezing.

Do not drive the vehicle until all the windows are clear.

Rear Window Defogger

The rear window defogger uses a warming grid to remove fog or frost from the rear window. Be sure to clear as much snow from the rear window as possible. An indicator light on the knob will come on to let you know that the rear window defogger is activated. The rear window defogger will turn off about fifteen minutes after the knob is pressed. If turned on again, the defogger will run for about seven and one-half minutes before turning off. If the vehicle speed is greater than 50 mph (80 kph) and the rear defogger is active, it will remain on as long as the speed is greater than 50 mph (80 kph). The defogger can also be turned off by pressing the knob again or by turning off the engine.

Downloaded from www.Manualslib.com manuals search engine

(Rear Defogger): Press the right knob on the control panel to turn the rear window defogger on or off.

Do not operate rear defogger when convertible top is down.

Notice: **Do not use anything sharp on the inside of the rear window. If you do, you could cut or damage the warming grid, and the repairs would not be covered by your warranty. Do not attach a temporary vehicle license, tape, a decal or anything similar to the defogger grid.**

Outlet Adjustment

Use the air outlets located in the center and on the side of your instrument panel to direct the airflow.

Your vehicle has air outlets that allow you to adjust the direction and amount of airflow inside the vehicle. Move the louvers up or down or turn clockwise or counterclockwise to change the direction of the airflow.

Your vehicle has flow through ventilation that allows outside air to be forced through your ventilation system when your vehicle is moving. Outside air will enter the vehicle when the air conditioning fan is running. Flow through ventilation can be stopped in vent and bi-level modes by pressing the recirculation button.

Operation Tips

- Clear away any ice, snow or leaves from the air inlets at the base of the windshield that may block the flow of air into your vehicle.
- Use of non-GM approved hood deflectors may adversely affect the performance of the system.
- Keep the path under the front seats clear of objects to help circulate the air inside of your vehicle more effectively.

Downloaded from www.Manualslib.com manuals search engine

Warning Lights, Gages, and Indicators

This part describes the warning lights and gages that may be on your vehicle. The pictures will help you locate them.

Warning lights and gages can signal that something is wrong before it becomes serious enough to cause an expensive repair or replacement. Paying attention to your warning lights and gages could also save you or others from injury.

Warning lights come on when there may be or is a problem with one of your vehicle's functions. As you will see in the details on the next few pages, some warning lights come on briefly when you start the engine just to let you know they are working. If you are familiar with this section, you should not be alarmed when this happens.

Gages can indicate when there may be or is a problem with one of your vehicle's functions. Often gages and warning lights work together to let you know when there is a problem with your vehicle.

When one of the warning lights comes on and stays on as you are driving, or when one of the gages shows there may be a problem, check the section that tells you what to do about it. Please follow this manual's advice. Waiting to do repairs can be costly and even dangerous. So please get to know your warning lights and gages. They are a big help.

Downloaded from www.Manualslib.com manuals search engine

Instrument Panel Cluster

Your instrument panel cluster is designed to let you know at a glance how your vehicle is running. You will know how fast you are going, about how much fuel is left in the tank, and many other things you will need to drive safely and economically.

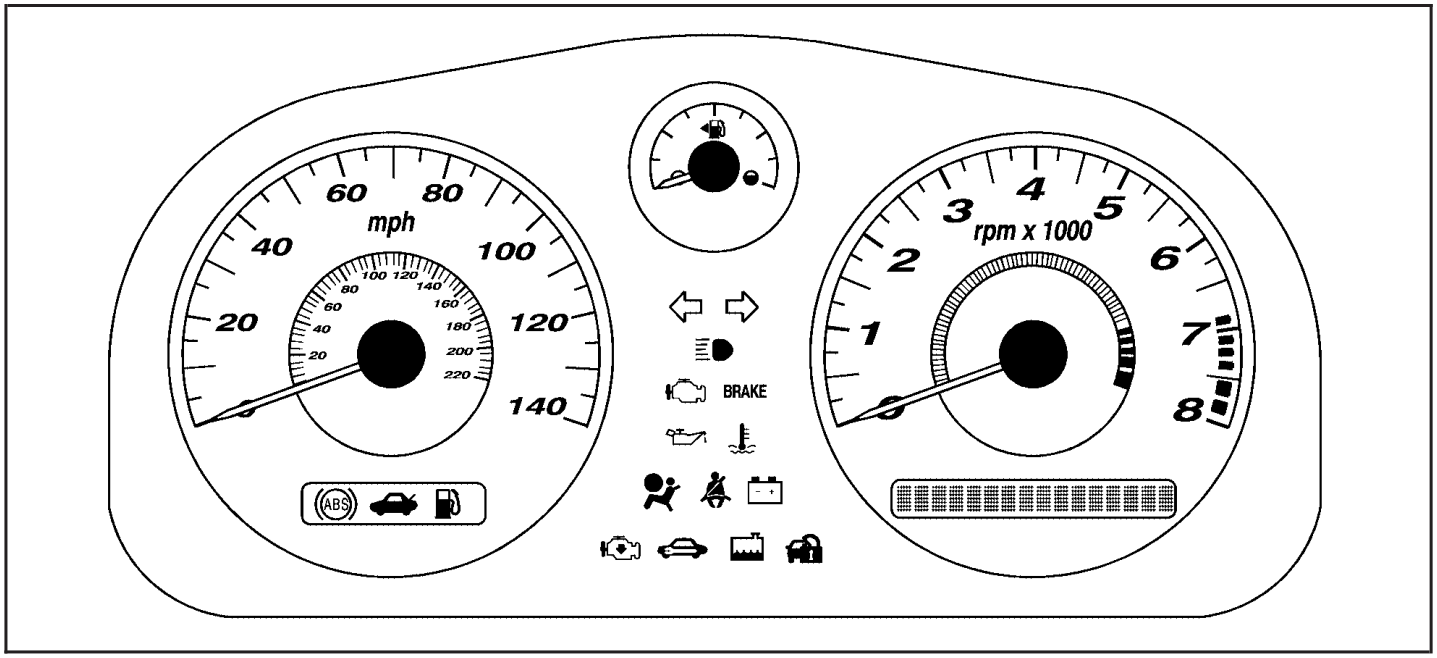

United States Cluster shown, Canada and Turbo model similar

Downloaded from www.Manualslib.com manuals search engine

Speedometer and Odometer

The speedometer lets you see your speed in both miles per hour (mph) and kilometers per hour (km/h).

The vehicle's odometer works together with the Driver Information Center (DIC), if your vehicle has one. A Trip A and Trip B odometer can be set. See "Trip Information" under *DIC Operation and Displays on page 146*.

The odometer mileage can be checked without the vehicle running. Open the driver's door and the mileage will be displayed briefly.

If your vehicle ever needs a new odometer installed, the new one will be set to the correct mileage total of the old odometer.

Tachometer

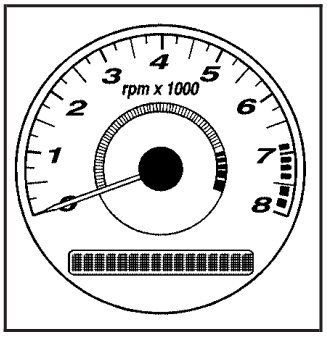

The tachometer displays the engine speed in revolutions per minute (rpm).

Notice: **If you operate the engine with the tachometer in the shaded warning area, your vehicle could be damaged, and the damages would not be covered by your warranty. Do not operate the engine with the tachometer in the shaded warning area.**

Downloaded from www.Manualslib.com manuals search engine

Safety Belt Reminder Light

When the key is turned to RUN or START, a chime will come on for several seconds to remind people to fasten their safety belts, unless the driver's safety belt is already buckled.

The safety belt light will also come on and stay on for several seconds, then it will flash for several more.

This chime and light will be repeated if the driver remains unbuckled and the vehicle is in motion.

If the driver's belt is already buckled, neither the chime nor the light will come on.

Passenger Safety Belt Reminder Light

Several seconds after the key is turned to RUN or START, a chime will sound for several seconds to remind the front passenger to buckle their safety belt. This would only occur if the passenger airbag is enabled. See *Passenger Sensing System on page 50* for more information. The passenger safety belt light will also come on and stay on for several seconds, then it will flash for several more.

This chime and light will be repeated if the passenger remains unbuckled and the vehicle is in motion.

If the passenger's safety belt is buckled, neither the chime nor the light will come on.

Downloaded from www.Manualslib.com manuals search engine

Airbag Readiness Light

There is an airbag readiness light on the instrument panel, which shows the airbag symbol. The system checks the airbag's electrical system for malfunctions. The light tells you if there is an electrical problem. The system check includes the airbag sensor, the airbag modules, the wiring and the crash sensing and diagnostic module. For more information on the airbag system, see *Airbag System on page 42*.

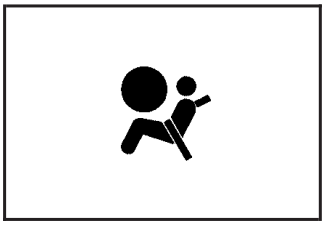

This light will come on when you start your vehicle, and it will flash for a few seconds. Then the light should go out. This means the system is ready.

If the airbag readiness light stays on after you start the vehicle or comes on when you are driving, your airbag system may not work properly. Have your vehicle serviced right away.

⚠ CAUTION:

If the airbag readiness light stays on after you start your vehicle, it means the airbag system may not be working properly. The airbags in your vehicle may not inflate in a crash, or they could even inflate without a crash. To help avoid injury to yourself or others, have your vehicle serviced right away if the airbag readiness light stays on after you start your vehicle.

The airbag readiness light should flash for a few seconds when you turn the ignition key to RUN or START. If the light does not come on then, have it fixed so it will be ready to warn you if there is a problem.

Downloaded from www.Manualslib.com manuals search engine

Passenger Airbag Status Indicator

Your vehicle has the passenger sensing system. Your instrument panel has a passenger airbag status indicator.

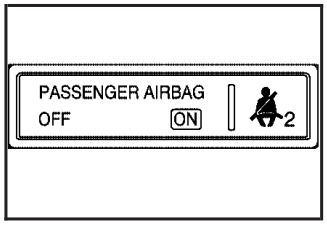

United States

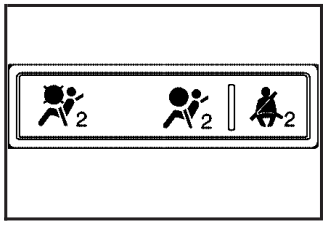

Canada

The indicator next to the passenger airbag status indicator lights is the passenger safety belt reminder light. See *Passenger Safety Belt Reminder Light on page 130* for more information on that indicator.

When the ignition key is turned to RUN or START, the passenger airbag status indicator will light ON and OFF, or the symbol for on and off, for several seconds as a system check. Then, after several more seconds, the status indicator will light either ON or OFF, or either the on or off symbol to let you know the status of the right front passenger's frontal airbag.

If the word ON or the on symbol is lit on the passenger airbag status indicator, it means that the right front passenger's frontal airbag is enabled (may inflate).

⚠ CAUTION:

If the on indicator comes on when you have a rear-facing child restraint installed in the right front passenger's seat, it means that the passenger sensing system has not turned off the passenger's frontal airbag. A child in a rear-facing child restraint can be seriously injured or killed if the right front passenger's airbag inflates. This is because the back of the rear-facing child restraint would be very close to the inflating airbag. Do not use a rear-facing child restraint in the right front passenger's seat if the airbag is turned on.

Downloaded from www.Manualslib.com manuals search engine

⚠ CAUTION:

Even though the passenger sensing system is designed to turn off the passenger's frontal airbag if the system detects a rear-facing child restraint, no system is fail-safe, and no one can guarantee that an airbag will not deploy under some unusual circumstance, even though it is turned off. We recommend that rear-facing child restraints be transported in vehicles with a rear seat that will accommodate a rear-facing child restraint, whenever possible.

If the word OFF or the off symbol is lit on the airbag status indicator, it means that the passenger sensing system has turned off the right front passenger's frontal airbag. See *Passenger Sensing System on page 50* for more on this, including important safety information.

If, after several seconds, all status indicator lights remain on, or if there are no lights at all, there may be a problem with the lights or the passenger sensing system. See your dealer for service.

⚠ CAUTION:

If the off indicator and the airbag readiness light ever come on together, it means that something may be wrong with the airbag system. If this ever happens, have the vehicle serviced promptly, because an adult-size person sitting in the right front passenger seat may not have the protection of the frontal airbag. See *Airbag Readiness Light on page 131*.

Downloaded from www.Manualslib.com manuals search engine

Charging System Light

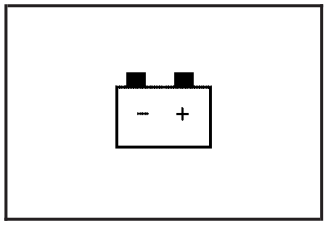

The charging system light will come on briefly when you turn on the ignition, and when the engine is not running, as a check to show you it is working.

Then it should go out when the engine is started.

If it stays on, or comes on while you are driving, you may have a problem with the electrical charging system. Have it checked by your dealer. Driving while this light is on could drain your battery.

If you must drive a short distance with the light on, be certain to turn off all your accessories, such as the radio and air conditioner.

Brake System Warning Light

Your vehicle's hydraulic brake system is divided into two parts. If one part is not working, the other part can still work and stop you. For good braking, though, you need both parts working well.

If the warning light comes on, there is a brake problem. Have your brake system inspected right away.

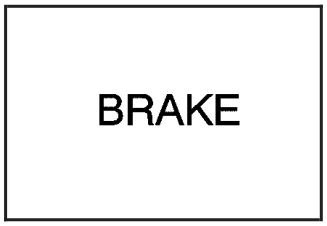

United States

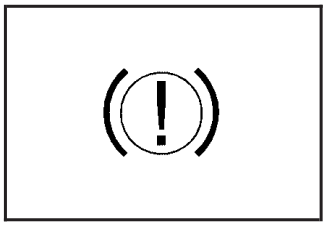

Canada

This light should come on briefly when you turn the ignition key to RUN. If it does not come on then, have it fixed so it will be ready to warn you if there is a problem.

Downloaded from www.Manualslib.com manuals search engine

When the ignition is on, the brake system warning light will also come on when you set your parking brake. The light will stay on if your parking brake does not release fully. If it stays on after your parking brake is fully released, it means you have a brake problem.

If the light comes on while you are driving, pull off the road and stop carefully. Make sure the parking brake is fully released. You may notice that the pedal is harder to push or, the pedal may go closer to the floor. It may take longer to stop. If the light is still on, have the vehicle towed for service.
See *Towing Your Vehicle on page 231*.

⚠ CAUTION:

Your brake system may not be working properly if the brake system warning light is on. Driving with the brake system warning light on can lead to an accident. If the light is still on after you have pulled off the road and stopped carefully, have the vehicle towed for service.

Anti-Lock Brake System Warning Light

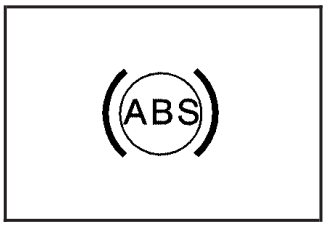

Your vehicle may have the Anti-Lock Brake System (ABS).

This light will come on when your engine is started and may stay on for several seconds. That is normal.

Downloaded from www.Manualslib.com manuals search engine

If the light stays on, turn the ignition off. If the light comes on when you are driving, stop as soon as possible and turn the ignition off. Then start the engine again to reset the system. If the light still stays on after driving at a speed of at least 13 mph (20 km/h), or comes on again while you are driving, your vehicle needs service. If the regular brake system warning light is not on, you still have brakes, but you do not have anti-lock brakes. If the regular brake system warning light is also on, you do not have anti-lock brakes and there is a problem with your regular brakes. See *Brake System Warning Light on page 134*.

The ABS warning light will come on briefly when you turn the ignition key to RUN. This is normal. If the light does not come on then, have it fixed so it will be ready to warn you if there is a problem.

Electronic Stability Control (ESC)/ Traction Control System (TCS) Indicator/Warning Light (2.0L Engine Only)

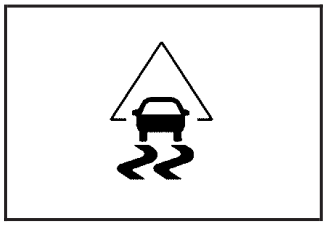

This light is located in the center of the instrument panel cluster.

For vehicles that have the Electronic Stability Control (ESC) system or the Traction Control System (TCS), this warning light should come on briefly when the engine is started.

If the warning light does not come on then, have it fixed so it will be ready to warn you if there is a problem. This light, along with the appropriate Driver Information Center (DIC) messages, indicates when the ESC system and the TCS are working or are disabled.

Downloaded from www.Manualslib.com manuals search engine

If this light is on and not flashing, the TCS and potentially the ESC system have been disabled. Check your DIC messaging to determine which feature(s) is no longer functioning and whether it is because of the driver turning off the feature(s), or the system may not be working properly and your vehicle requires service. If the TCS is disabled, wheel spin will not be limited. If the ESC system is disabled, the system will not aid in maintaining vehicle directional control. In either case, adjust your driving accordingly.

If the light is on and flashing, the TCS or the ESC system is actively working. Check the DIC messaging for details to determine which system is working. If the LOW TRACTION message appears, the system is limiting wheel spin. If the ESC ACTIVE message appears, the system is aiding in maintaining vehicle directional control.

See *Electronic Stability Control on page 200* and *Traction Control System (TCS) on page 198* for more information.

See *DIC Warnings and Messages on page 148* for more information on the messages associated with this light.

Engine Coolant Temperature Warning Light

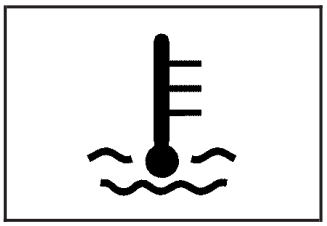

The engine coolant temperature warning light will come on when the engine has overheated.

If this happens you should pull over and turn off the engine as soon as possible. See *Engine Overheating on page 260* for more information.

Notice: **Driving with the engine coolant temperature warning light on could cause your vehicle to overheat. See *Engine Overheating on page 260*. Your vehicle could be damaged, and it might not be covered by your warranty. Never drive with the engine coolant temperature warning light on.**

This light will also come on briefly when starting your vehicle. If it does not, have your vehicle serviced.

Downloaded from www.Manualslib.com manuals search engine

Low Coolant Warning Light

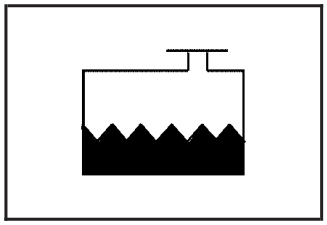

This light comes on briefly when you turn your ignition on.

If this light comes on and stays on, the coolant level in your vehicle is low. If the light is on along with an overheat warning, you may have a serious overheating problem.

Notice: **Driving with the low coolant warning light on could cause your vehicle to overheat. See "Engine Overheating" under *Engine Coolant on page 257*. Your vehicle could be damaged and the damages might not be covered by your warranty.**

See *Engine Coolant on page 257* for information on what to do. Your vehicle should be serviced as soon as possible.

Malfunction Indicator Lamp

Check Engine Light

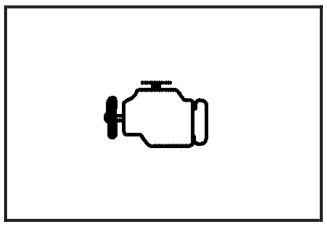

Your vehicle has a computer which monitors operation of the fuel, ignition, and emission control systems.

This system is called OBD II (On-Board Diagnostics-Second Generation) and is intended to assure that emissions are at acceptable levels for the life of the vehicle, helping to produce a cleaner environment. The check engine light comes on to indicate that there is a problem and service is required. Malfunctions often will be indicated by the system before any problem is apparent. This may prevent more serious damage to your vehicle. This system is also designed to assist your service technician in correctly diagnosing any malfunction.

Downloaded from www.Manualslib.com manuals search engine

Notice: **If you keep driving your vehicle with this light on, after awhile, your emission controls may not work as well, your fuel economy may not be as good, and your engine may not run as smoothly. This could lead to costly repairs that may not be covered by your warranty.**

Notice: **Modifications made to the engine, transmission, exhaust, intake, or fuel system of your vehicle or the replacement of the original tires with other than those of the same Tire Performance Criteria (TPC) can affect your vehicle's emission controls and may cause this light to come on. Modifications to these systems could lead to costly repairs not covered by your warranty. This may also result in a failure to pass a required Emission Inspection/Maintenance test. See *Accessories and Modifications on page 235*.**

This light should come on, as a check to show you it is working, when the ignition is on and the engine is not running. If the light does not come on, have it repaired. This light will also come on during a malfunction in one of two ways:

- **Light Flashing** — A misfire condition has been detected. A misfire increases vehicle emissions and may damage the emission control system on your vehicle. Diagnosis and service may be required.
- **Light On Steady** — An emission control system malfunction has been detected on your vehicle. Diagnosis and service may be required.

Downloaded from www.Manualslib.com manuals search engine

If the Light is Flashing

The following may prevent more serious damage to your vehicle:

- Reducing vehicle speed
- Avoiding hard accelerations
- Avoiding steep uphill grades

If the light stops flashing and remains on steady, see “If the Light Is On Steady” following.

If the light continues to flash, when it is safe to do so, stop the vehicle. Find a safe place to park your vehicle. Turn the key off, wait at least 10 seconds and restart the engine. If the light remains on steady, see “If the Light Is On Steady” following. If the light is still flashing, follow the previous steps, and see your dealer for service as soon as possible.

If the Light Is On Steady

You may be able to correct the emission system malfunction by considering the following:

Did you recently put fuel into your vehicle?

If so, reinstall the fuel cap, making sure to fully install the cap. See *Filling the Tank on page 240*. The diagnostic system can determine if the fuel cap has been left off or improperly installed. A loose or missing fuel cap will allow fuel to evaporate into the atmosphere. A few driving trips with the cap properly installed should turn the light off.

Did you just drive through a deep puddle of water?

If so, your electrical system may be wet. The condition will usually be corrected when the electrical system dries out. A few driving trips should turn the light off.

Downloaded from www.Manualslib.com manuals search engine

Have you recently changed brands of fuel?

If so, be sure to fuel your vehicle with quality fuel. See *Gasoline Octane on page 237*. Poor fuel quality will cause your engine not to run as efficiently as designed. You may notice this as stalling after start-up, stalling when you put the vehicle into gear, misfiring, hesitation on acceleration, or stumbling on acceleration. (These conditions may go away once the engine is warmed up.) This will be detected by the system and cause the light to turn on.

If you experience one or more of these conditions, change the fuel brand you use. It will require at least one full tank of the proper fuel to turn the light off.

If none of the above steps have made the light turn off, your dealer can check the vehicle. Your dealer has the proper test equipment and diagnostic tools to fix any mechanical or electrical problems that may have developed.

Emissions Inspection and Maintenance Programs

Some state/provincial and local governments have or may begin programs to inspect the emission control equipment on your vehicle. Failure to pass this inspection could prevent you from getting a vehicle registration.

Here are some things you need to know to help your vehicle pass an inspection:

Your vehicle will not pass this inspection if the check engine light is on or not working properly.

Your vehicle will not pass this inspection if the OBD (on-board diagnostic) system determines that critical emission control systems have not been completely diagnosed by the system. The vehicle would be considered not ready for inspection. This can happen if you have recently replaced your battery or if your battery has run down. The diagnostic system is designed to evaluate critical emission control systems during normal driving. This may take several days of routine driving. If you have done this and your vehicle still does not pass the inspection for lack of OBD system readiness, your dealer can prepare the vehicle for inspection.

Downloaded from www.Manualslib.com manuals search engine

Oil Pressure Light

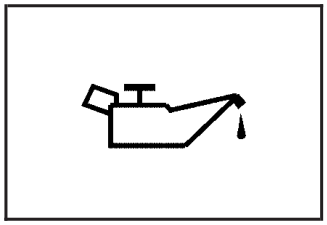

If you have a low engine oil pressure problem, this light will stay on after you start your engine, or come on when you are driving.

This indicates that your engine is not receiving enough oil.

The engine could be low on oil, or could have some other oil problem. Have it fixed immediately.

The oil light could also come on in three other situations:

- When the ignition is on but the engine is not running, the light will come on as a test to show you it is working, but the light will go out when you turn the ignition to START. If it does not come on with the ignition on, you may have a problem with the fuse or bulb. Have it fixed right away.
- If you are idling at a stop sign, the light may blink on and then off.
- If you make a hard stop, the light may come on for a moment. This is normal.

⚠ CAUTION:

Do not keep driving if the oil pressure is low. If you do, your engine can become so hot that it catches fire. You or others could be burned. Check your oil as soon as possible and have your vehicle serviced.

Notice: **Lack of proper engine oil maintenance may damage the engine. The repairs would not be covered by your warranty. Always follow the maintenance schedule in this manual for changing engine oil.**

Downloaded from www.Manualslib.com manuals search engine

Security Light

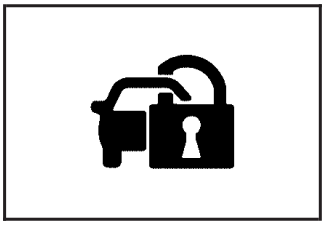

This light flashes when the vehicle security system is activated.

Reduced Engine Power Light (2.4L Engine Only)

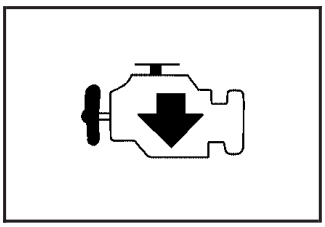

This light will come on briefly when the ignition is turned on.

If this light is on, a chime will sound and a noticeable reduction in the vehicle's performance may occur.

Let the vehicle idle for a few minutes, if the reduced engine power light is still on, but there is no reduction in performance, proceed to your destination. The performance may be reduced the next time the vehicle is driven. The vehicle may be driven at a reduced speed while the reduced engine power light is on, but acceleration and speed may be reduced.

Anytime the reduced engine power light stays on, the vehicle should be taken to an authorized dealer as soon as possible for service.

Highbeam On Light

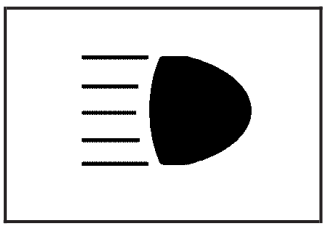

This light comes on when the high-beam headlamps are in use.

See *Headlamp High/Low-Beam Changer on page 112*.

Downloaded from www.Manualslib.com manuals search engine

Trunk Ajar Light

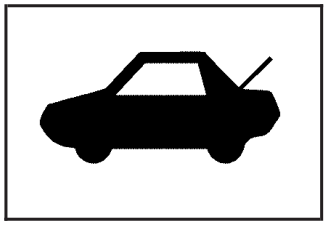

This light will come on and a chime will sound if the trunk is ajar.

Service Vehicle Soon Light (2.4L Engine Only)

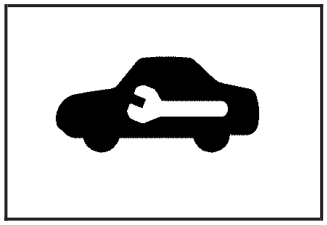

This light will come on briefly when the ignition is turned on.

This light will come on if you have problems that may require the vehicle to be taken in for service.

If the light comes on, take your vehicle to an authorized dealer for service as soon as possible.

Fuel Gage

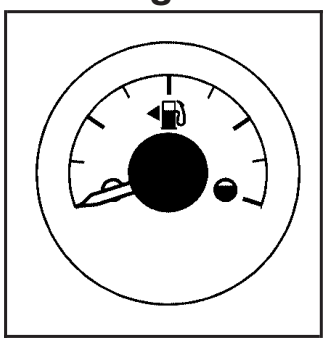

Your fuel gage tells you about how much fuel you have left.

Here are four things that some owners ask about. None of these show a problem with your fuel gage:

- At the service station, the gas pump shuts off before the gage reads full.
- It takes a little more or less fuel to fill up than the gage indicated. For example, the gage may have indicated the tank was half full, but it actually took a little more or less than half the tank's capacity to fill the tank.
- The gage moves a little when you turn a corner or speed up.
- The gage doesn't go back to empty when you turn off the ignition.

For your fuel tank capacity, see *Capacities and Specifications on page 332*.

Downloaded from www.Manualslib.com manuals search engine

Low Fuel Warning Light

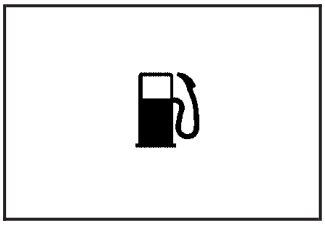

This light will come on briefly when you are starting the engine.

This light also comes on when the fuel tank is low on fuel. When you add fuel the light should go off. If it does not, have your vehicle serviced.

Driver Information Center (DIC)

Your vehicle may have a Driver Information Center (DIC). The DIC display gives you the status of many of your vehicle's systems. The DIC is also used to display driver personalization menu modes and warning/status messages. All messages will appear in the DIC display, located at the bottom of the tachometer on the instrument panel cluster.

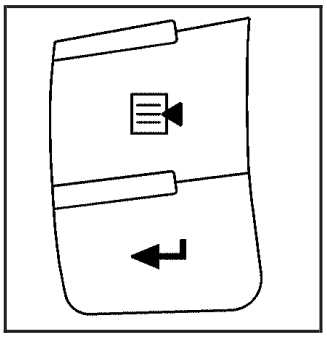

The DIC buttons are located on the left side of the steering wheel.

(Information): Press this button to scroll through the vehicle information mode displays.

(Reset): Press this button to reset some vehicle information mode displays, select a personalization menu mode setting, or acknowledge a warning message.

Press and hold the information and reset buttons at the same time for one second, then release the buttons to enter the personalization menu. See *DIC Vehicle Personalization on page 152* for more information.

Downloaded from www.Manualslib.com manuals search engine

DIC Operation and Displays

The DIC comes on when the ignition is on. The DIC has different modes which can be accessed by pressing the DIC buttons. The button functions are detailed in the following.

Information Modes

(Information): Press this button to scroll through the following vehicle information modes:

Odometer

Press the information button until the odometer is displayed. This mode shows the total distance the vehicle has been driven in either miles (mi) or kilometers (km).

To change the DIC display to English or metric units, see “UNITS” under *DIC Vehicle Personalization on page 152*.

TRIP A or TRIP B

Press the information button until TRIP A or TRIP B is displayed. These modes show the current distance traveled since the last reset for each trip odometer in either miles (mi) or kilometers (km). Both odometers can be used at the same time.

Each trip odometer can be reset to zero separately by pressing and holding the reset button for a few seconds while the desired trip odometer is displayed.

FUEL RANGE

Press the information button until FUEL RANGE is displayed. This mode shows the remaining distance you can drive without refueling in either miles (mi) or kilometers (km). It is based on fuel economy and the fuel remaining in the tank.

When the fuel level is low, FUEL RANGE LOW will display.

The fuel economy data used to determine fuel range is an average of recent driving conditions. As your driving conditions change, this data is gradually updated. The FUEL RANGE mode cannot be reset.

Downloaded from www.Manualslib.com manuals search engine

ECON (Economy)

Press the information button until ECON is displayed. This mode shows how many miles per gallon (mpg) or liters per 100 kilometers (L/100 km) your vehicle is getting based on current and past driving conditions.

Press and hold the reset button while ECON is displayed to reset the average fuel economy. Average fuel economy will then be calculated starting from that point. If the average fuel economy is not reset, it will be continually updated each time you drive.

AV (Average) SPEED

Press the information button until AV SPEED is displayed. This mode shows the vehicle's average speed in miles per hour (mph) or kilometers per hour (km/h).

Press and hold the reset button while AV SPEED is displayed to reset the average vehicle speed.

OIL LIFE

Press the information button until OIL LIFE is displayed. The engine oil life system shows an estimate of the oil's remaining useful life. It will show 100% when the system is reset after an oil change. It will alert you to change your oil on a schedule consistent with your driving conditions.

In addition to the engine oil life system monitoring the oil life, additional maintenance is recommended in the Maintenance Schedule in this manual. See *Engine Oil on page 247* and *Part A: Scheduled Maintenance Services on page 336*.

Always reset the engine oil life system after an oil change. See "How to Reset the Engine Oil Life System" under *Engine Oil Life System on page 252*.

COOLANT

Press the information button until COOLANT is displayed. This mode shows the temperature of the engine coolant in either degrees Fahrenheit (°F) or degrees Celsius (°C).

Downloaded from www.Manualslib.com manuals search engine

BOOST (Turbo Only)

If your vehicle has this feature, press the information button until BOOST is displayed. This mode shows a graphic that indicates the amount of boost the engine is receiving in either pounds per square inch (psi) or kilopascals (kPa).

DIC Warnings and Messages

These messages appear if there is a problem detected in one of your vehicle's systems.

A message will clear when the vehicle's condition is no longer present. To acknowledge a message and clear it from the display, press and hold any of the DIC buttons. If the condition is still present, the warning message will come back on the next time the vehicle is turned off and back on. With most messages, a warning chime sounds when the message displays. Your vehicle may have other warning messages.

AUTO (Automatic) LIGHTS OFF

This message displays if the automatic headlamp system is disabled with the headlamp switch.

AUTO (Automatic) LIGHTS ON

This message displays if the automatic headlamp system is enabled with the headlamp switch.

BRAKE FLUID

This message displays to inform the driver that the brake fluid level is low while the ignition is on. The brake system warning light on the instrument panel cluster also comes on. See *Brake System Warning Light on page 134* for more information. Have the brake system serviced by your dealer as soon as possible.

CHANGE OIL SOON

This message displays when the life of the engine oil has expired and it should be changed.

When you acknowledge the CHANGE OIL SOON message by clearing it from the display, you still must reset the engine oil life system separately. See *Engine Oil Life System on page 252* and *Part A: Scheduled Maintenance Services on page 336* for more information.

Downloaded from www.Manualslib.com manuals search engine

CHECK GAS CAP

This message displays if the fuel cap has not been fully tightened. Recheck the fuel cap to make sure that it is on properly. A few driving trips with the cap properly installed should turn the message off.

COMPETITIVE MODE

If your vehicle has this feature, this message displays when the Competitive Driving mode is selected. The Traction Control System (TCS) will not be operating while in the Competitive Driving mode and the ESC/TCS light on the instrument panel cluster will be on solid. Adjust your driving accordingly. See *Electronic Stability Control on page 200* and *Electronic Stability Control (ESC)/ Traction Control System (TCS) Indicator/Warning Light (2.0L Engine Only) on page 136* for more information.

CRUISE ENGAGED

This message displays when the cruise control system is active. See *Cruise Control on page 115* for more information.

DOOR AJAR

This message displays if one or more of the vehicle's doors are not closed properly. When this message displays, make sure that the door(s) are closed completely.

ENGINE DISABLED

This message displays if the starting of the engine is disabled. Have your vehicle serviced by your dealer immediately.

ESC (Electronic Stability Control) ACTIVE

If your vehicle has Electronic Stability Control (ESC), this message displays and the ESC/TCS light on the instrument panel cluster flashes when ESC is assisting you with directional control of the vehicle. You may feel or hear the system working and see this message displayed in the DIC.

Downloaded from www.Manualslib.com manuals search engine

Slippery road conditions may exist when this message is displayed, so adjust your driving accordingly. This message may stay on for a few seconds after ESC stops assisting you with directional control of the vehicle. This is normal when the system is operating. See *Electronic Stability Control on page 200* and *Electronic Stability Control (ESC)/Traction Control System (TCS) Indicator/Warning Light (2.0L Engine Only) on page 136* for more information.

ESC (Electronic Stability Control) OFF

If your vehicle has Electronic Stability Control (ESC), this message displays and the ESC/TCS light on the instrument panel cluster comes on solid when ESC is turned off. Adjust your driving accordingly. See *Electronic Stability Control on page 200* and *Electronic Stability Control (ESC)/Traction Control System (TCS) Indicator/Warning Light (2.0L Engine Only) on page 136* for more information.

KEY FOB BATT (Battery) LOW

This message displays if the Remote Keyless Entry (RKE) transmitter battery is low. Replace the battery in the transmitter. See “Battery Replacement” under *Remote Keyless Entry (RKE) System Operation on page 62*.

LOW TRACTION

If your vehicle has the Traction Control System (TCS), this message displays and the ESC/TCS light on the instrument panel cluster flashes when the system is actively limiting wheel spin. Slippery road conditions may exist if this message is displayed, so adjust your driving accordingly. This message stays on for a few seconds after the system stops limiting wheel spin. See *Traction Control System (TCS) on page 198* and *Electronic Stability Control (ESC)/Traction Control System (TCS) Indicator/Warning Light (2.0L Engine Only) on page 136* for more information.

PARKING BRAKE

This message displays if the parking brake is left engaged. See *Parking Brake on page 86* for more information.

Downloaded from www.Manualslib.com manuals search engine

SERVICE AIR BAG

This message displays when there is a problem with the airbag system. Have your vehicle serviced by your dealer immediately.

SERVICE ESC (ELECTRONIC STABILITY CONTROL)

If your vehicle has Electronic Stability Control (ESC), this message displays and a chime sounds if there has been a problem detected with ESC. The ESC/TCS light also appears on the instrument panel cluster. This light stays on solid as long as the detected problem remains present. When this message displays, the system is not working. Adjust your driving accordingly. See *Electronic Stability Control on page 200* and *Electronic Stability Control (ESC)/Traction Control System (TCS) Indicator/Warning Light (2.0L Engine Only) on page 136* for more information.

If this message turns on while you are driving, pull off the road as soon as possible and stop carefully. Try resetting the system by turning the ignition off and then back on. If this message still stays on or turns back on again while you are driving, your vehicle needs service. Have the ESC inspected by your dealer as soon as possible.

SERVICE TRACTION

If your vehicle has the Traction Control System (TCS), this message displays and a chime sounds when the system is not functioning properly. The ESC/TCS light also appears on the instrument panel cluster. This light stays on solid as long as the detected problem remains present. When this message displays, the system is not working. Adjust your driving accordingly. See *Traction Control System (TCS) on page 198* and *Electronic Stability Control (ESC)/Traction Control System (TCS) Indicator/Warning Light (2.0L Engine Only) on page 136* for more information. Have the TCS serviced by your dealer as soon as possible.

TRACTION OFF

If your vehicle has the Traction Control System (TCS), this message displays and the ESC/TCS light on the instrument panel cluster comes on solid when the TCS is turned off. Adjust your driving accordingly. See *Traction Control System (TCS) on page 198* and *Electronic Stability Control (ESC)/Traction Control System (TCS) Indicator/Warning Light (2.0L Engine Only) on page 136* for more information.

Downloaded from www.Manualslib.com manuals search engine

TRUNK AJAR

This message displays when the trunk lid is not closed completely. Make sure that the trunk lid is closed completely. See *Trunk on page 68* and *Trunk Ajar Light on page 144*.

DIC Vehicle Personalization

Your vehicle has personalization capabilities that allow you to program certain features to a preferred setting. All of the features listed may not be available on your vehicle. Only the features available will be displayed on the DIC.

The default settings for the features were set when your vehicle left the factory, but may have been changed from their default state since that time.

To change feature settings, use the following procedure:

Entering Personalization Menu

1. Turn the ignition on while the vehicle is stopped.

   To avoid excessive drain on the battery, it is recommended that the headlamps are turned off.

2. Press and hold the information and reset buttons at the same time for one second, then release to enter the personalization menu.

   If the vehicle speed is greater than 2 mph (3 km/h), only the UNITS menu will be accessible.

3. Press the information button to scroll through the available personalization menu modes.

   Press the reset button to scroll through the available settings for each mode.

   If you do not make a selection within ten seconds, the display will go back to the previous information displayed.

Personalization Menu Modes

OIL LIFE RESET

When this feature is displayed, you can reset the engine oil life system. To reset the system, see *Engine Oil Life System on page 252*. See “OIL LIFE” under *DIC Operation and Displays on page 146* for more information.

Downloaded from www.Manualslib.com manuals search engine

UNITS

This feature allows you to select the units of measurement in which the DIC will display the vehicle information. When UNITS appears on the display, press and hold the reset button for at least one second to scroll through the available settings:

ENGLISH (default in United States): All information will be displayed in English units.

METRIC (default in Canada): All information will be displayed in metric units.

Choose one of the available settings and press the information button to select it and move on to the next feature.

LOCK HORN

If your vehicle has Remote Keyless Entry (RKE), this feature, which allows the vehicle's horn to chirp every time the lock button on the RKE transmitter is pressed, can be enabled or disabled. When LOCK HORN appears on the display, press and hold the reset button for at least one second to scroll through the available settings:

OFF (default): The horn will not chirp on the first press of the lock button on the RKE transmitter. The horn will still chirp on the second press.

ON: The horn will chirp on the first press of the lock button on the RKE transmitter.

See *Remote Keyless Entry (RKE) System Operation on page 62* for more information.

Choose one of the available settings and press the information button to select it and move on to the next feature.

UNLOCK HORN

If your vehicle has Remote Keyless Entry (RKE), this feature, which allows the vehicle's horn to chirp on the first press of the unlock button on the RKE transmitter, can be enabled or disabled. When UNLOCK HORN appears on the display, press and hold the reset button for at least one second to scroll through the available settings:

OFF (default): The horn will not chirp when the unlock button on the RKE transmitter is pressed.

ON: The horn will chirp on the first press of the unlock button on the RKE transmitter.

See *Remote Keyless Entry (RKE) System Operation on page 62* for more information.

Choose one of the available settings and press the information button to select it and move on to the next feature.

Downloaded from www.Manualslib.com manuals search engine

LIGHT FLASH

If your vehicle has Remote Keyless Entry (RKE), this feature, which allows the vehicle's exterior hazard/turn signal lighting to flash every time the lock, unlock, or trunk release buttons on the RKE transmitter are pressed, can be enabled or disabled. When LIGHT FLASH appears on the display, press and hold the reset button for at least one second to scroll through the available settings:

OFF: The exterior hazard/turn signal lighting will not flash when the lock, unlock, or trunk release buttons on the RKE transmitter are pressed.

ON (default): The exterior hazard/turn signal lighting will flash when the lock, unlock, or trunk release buttons on the RKE transmitter are pressed.

See *Remote Keyless Entry (RKE) System Operation on page 62* for more information.

Choose one of the available settings and press the information button to select it and move on to the next feature.

DELAY LOCK

This feature, which delays the actual locking of the vehicle, can be enabled or disabled. When DELAY LOCK appears on the display, press and hold the reset button for at least one second to scroll through the available settings:

ON (default): The doors will not lock until five seconds after the last door is closed. You can temporarily override delayed locking by pressing the lock button on the Remote Keyless Entry (RKE) transmitter a second time.

OFF: The doors will lock immediately when pressing the lock button on the RKE transmitter.

See *Delayed Locking on page 66* and *Remote Keyless Entry (RKE) System Operation on page 62* for more information.

Choose one of the available settings and press the information button to select it and move on to the next feature.

Downloaded from www.Manualslib.com manuals search engine

AUTO UNLK (Unlock)

This feature, which allows the vehicle to automatically unlock certain doors, can be enabled or disabled. When AUTO UNLK appears on the display, press and hold the reset button for at least one second to scroll through the available settings:

ALL (default): All of the doors will automatically unlock.

DRIVER: The driver's door will automatically unlock.

NONE: None of the doors will automatically unlock. You will need to manually unlock the doors.

If you have a manual transmission vehicle, the door(s) will automatically unlock when the key is turned off.

If you have an automatic transmission vehicle, you can select when the automatic unlocking will occur. See "UNLK (Unlock) (Automatic Transmission Only)" following.

See *Automatic Door Unlock on page 67* for more information.

Choose one of the available settings and press the information button to select it and move on to the next feature.

UNLK (Unlock) (Automatic Transmission Only)

This screen displays only if your vehicle has an automatic transmission and DRIVER or ALL is selected for the AUTO UNLK feature. This feature determines when the automatic door unlocking will occur. When UNLK appears on the display, press and hold the reset button for at least one second to scroll through the available settings:

KEY OFF: The door(s) will unlock when the key is turned off.

SHIFT TO P (Park) (default): The door(s) will unlock when the vehicle is shifted into PARK (P).

See *Automatic Door Unlock on page 67* for more information.

Choose one of the available settings and press the information button to select it and move on to the next feature.

Downloaded from www.Manualslib.com manuals search engine

EXT (Exterior) LIGHTS

If your vehicle has Remote Keyless Entry (RKE), this feature, which allows the vehicle's exterior perimeter lighting to turn on each time the unlock button on the RKE transmitter is pressed, can be enabled or disabled. When EXT LIGHTS appears on the display, press and hold the reset button for at least one second to scroll through the available settings:

OFF: The exterior perimeter lighting will not turn on when the unlock button on the RKE transmitter is pressed.

ON (default): The exterior perimeter lighting will turn on when the unlock button on the RKE transmitter is pressed.

See *Remote Keyless Entry (RKE) System Operation on page 62* for more information.

Choose one of the available settings and press the information button to select it and move on to the next feature.

LANGUAGE

This feature allows you to select the language in which the DIC will display. When LANGUAGE appears on the display, press and hold the reset button for at least one second to scroll through the available settings:

ENGLISH (default): The DIC will display all information in English.

FRENCH: The DIC will display all information in French.

SPANISH: The DIC will display all information in Spanish.

GERMAN: The DIC will display all information in German.

Choose one of the available settings and press the information button to select it and exit out of the personalization menu mode.

Exiting Personalization Menu

The personalization menu will be exited when any of the following conditions occur:

- A ten second time period has elapsed.
- The ignition is turned off.
- The end of the personalization menu list is reached.

Downloaded from www.Manualslib.com manuals search engine

Audio System(s)

Determine which radio your vehicle has and then read the pages following to familiarize yourself with its features.

Driving without distraction is a necessity for a safer driving experience. See *Defensive Driving on page 190*. By taking a few moments to read this manual and get familiar with your vehicle's audio system, you can use it with less effort, as well as take advantage of its features. While your vehicle is parked, set up your audio system by presetting your favorite radio stations, setting the tone and adjusting the speakers. Then, when driving conditions permit, you can tune to your favorite stations using the presets and steering wheel controls if the vehicle has them.

⚠ CAUTION:

This system provides you with a far greater access to audio stations and song listings. Giving extended attention to entertainment tasks while driving can cause a crash and you or others can be injured or killed. Always keep your eyes on the road and your mind on the drive — avoid engaging in extended searching while driving.

Keeping your mind on the drive is important for safe driving. For more information, see *Defensive Driving on page 190*.

Downloaded from www.Manualslib.com manuals search engine

Here are some ways in which you can help avoid distraction while driving.

While your vehicle is parked:

- Familiarize yourself with all of its controls.
- Familiarize yourself with its operation.
- Set up your audio system by presetting your favorite radio stations, setting the tone, and adjusting the speakers. Then, when driving conditions permit, you can tune to your favorite radio stations using the presets and steering wheel controls if the vehicle has them.

Notice: **Before adding any sound equipment to your vehicle, such as an audio system, CD player, CB radio, mobile telephone, or two-way radio, make sure that it can be added by checking with your dealer. Also, check federal rules covering mobile radio and telephone units. If sound equipment can be added, it is very important to do it properly. Added sound equipment may interfere with the operation of your vehicle's engine, radio, or other systems, and even damage them. Your vehicle's systems may interfere with the operation of sound equipment that has been added.**

Your vehicle has a feature called Retained Accessory Power (RAP). With RAP, the audio system can be played even after the ignition is turned off. See *Retained Accessory Power (RAP) on page 80* for more information.

Setting the Time (Without Date Display)

If your vehicle has an AM/FM base radio with a single CD player and preset buttons numbered one through six, the radio will have a clock button for setting the time. You can set the time by following these steps:

1. Turn the ignition key to ACC (accessory) or RUN. Press the power knob, located in the center of the radio, to turn the radio on.
2. Press the clock button until the hour numbers begin flashing on the display. Press the clock button a second time and the minute numbers will begin flashing on the display.

Downloaded from www.Manualslib.com manuals search engine

3. While either the hour or the minute numbers are flashing, turn the tune knob, located on the upper right side of the radio, clockwise or counterclockwise to increase or decrease the time.
4. Press the clock button again until the clock display stops flashing to set the currently displayed time; otherwise, the flashing will stop after five seconds and the current time displayed will be automatically set.

To change the time default setting from 12 hour to 24 hour, press the clock button and then the pushbutton located under the forward arrow label. Once the time 12H and 24H are displayed, press the pushbutton located under the desired option to select the default. Press the clock button again to apply the selected default, or let the screen time out.

Setting the Time (With Date Display)

If your vehicle has a radio with a single CD player, the radio has a clock button for setting the time and date.

To set the time and date, follow these instructions:

1. Turn the ignition key to ACC (accessory) or RUN. Press the power knob, located in the center of the radio, to turn the radio on.
2. Press the clock button and the HR, MIN, MM, DD, YYYY (hour, minute, month, day, and year) displays.
3. Press the pushbutton located under any one of the labels that you want to change. Every time the pushbutton is pressed again, the time or the date if selected, increases by one.
   - Another way to increase the time or date, is to press the right SEEK arrow or FWD (forward) button.
   - To decrease, press the left SEEK arrow or REV (reverse) button. You can also turn the tune knob, located on the upper right side of the radio, to adjust the selected setting.

The date does not automatically display. The only way to see the date is by pressing the clock button when the radio is on. The date with display times out after a few seconds and goes back to the normal radio and time display.

Downloaded from www.Manualslib.com manuals search engine

If your vehicle has a radio with a six-disc CD player, the radio has a MENU button instead of the clock button to set the time and date.

To set the time and date, follow these instructions:

1. Turn the ignition key to ACC (accessory) or RUN. Press the power knob, located in the center of the radio, to turn the radio on.
2. Press the MENU button. Once the clock option is displayed.
3. Press the pushbutton located under that label. The HR, MIN, MM, DD, YYYY displays.
4. Press the pushbutton located under any one of the labels that you want to change. Every time the pushbutton is pressed again, the time or the date if selected, increases by one.
   - Another way to increase the time or date, is to press the right SEEK arrow or FWD (forward) button.
   - To decrease, press the left SEEK arrow or REV (reverse) button. You can also turn the tune knob, located on the upper right side of the radio, to adjust the selected setting.

The date does not automatically display. The only way to see the date is by pressing the MENU button and then the clock button when the radio is on. The date with display times out after a few seconds and goes back to the normal radio and time display.

To change the time default setting from 12 hour to 24 hour or to change the date default setting from month/day/year to day/month/year, follow these instructions:

1. Press the clock button and then the pushbutton located under the forward arrow label. Once the time 12H and 24H, and the date MM/DD/YYYY (month, day, and year) and DD/MM/YYYY (day, month, and year) displays.
2. Press the pushbutton located under the desired option.
3. Press the clock or MENU button again to apply the selected default, or let the screen time out.

Downloaded from www.Manualslib.com manuals search engine

Radio with CD (Base)

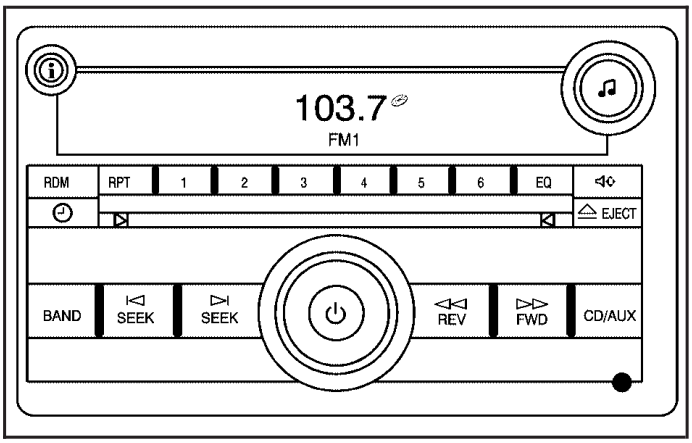

Playing the Radio

⏻ **(Power/Volume):** Press this knob to turn the system on and off.

Turn this knob clockwise or counterclockwise to increase or decrease the volume.

The radio goes to the previous volume setting whenever the radio is turned on. The volume can still be adjusted by using the volume knob.

Finding a Station

BAND: Press this button to switch between FM1, FM2, or AM. The selection displays.

♫ **(Tune):** Turn this knob to select radio stations.

⏮ **SEEK** ⏭ **:** Press the right or left SEEK arrow to go to the next or to the previous station and stay there.

To scan stations, press and hold either SEEK arrow for a few seconds until a beep sounds. The radio goes to a station, plays for a few seconds, then goes to the next station. Press either SEEK arrow again to stop scanning.

The radio only seeks and scans stations with a strong signal that are in the selected band.

i (Information): Press this button to switch the display between the radio station frequency and the time. While the ignition is off, press this button to display the time.

Downloaded from www.Manualslib.com manuals search engine

Setting Preset Stations

Up to 18 stations (six FM1, six FM2, and six AM), can be programmed on the six numbered pushbuttons, by performing the following steps:

1. Turn the radio on.
2. Press BAND to select FM1, FM2, or AM.
3. Tune in the desired station.
4. Press and hold one of the six numbered pushbuttons for three seconds until a beep sounds. When that pushbutton is pressed and released, the station that was set, returns.
5. Repeat Steps 2 through 4 for each pushbutton.

Setting the Tone (Bass/Treble)

BASS/TREB (Bass/Treble): To adjust the bass or treble, press the tune knob or the BASS/TREBLE pushbutton until the desired tone control label displays. Turn the tune knob clockwise or counterclockwise to increase or decrease the setting. The current bass or treble level displays. If a station's frequency is weak, or has static, decrease the treble.

EQ (Equalization): Press this button to adjust BASS and TREBLE Settings.

Adjusting the Speakers (Balance/Fade)

BAL/FADE (Balance/Fade): To adjust the balance or fade, press this button or the tune knob until the desired speaker control label displays. Turn the tune knob clockwise or counterclockwise to adjust the setting.

Radio Messages

Calibration Error: The audio system has been calibrated for your vehicle from the factory. If Calibration Error displays, it means that the radio has not been configured properly for your vehicle and it must be returned to your dealer for service.

Loc (Locked): This message is displayed while the THEFTLOCK® system has locked up the radio. Take the vehicle to your dealer for service.

If any error occurs repeatedly or if an error cannot be corrected, contact your dealer.

Playing a CD (Single CD Player)

Insert a CD partway into the slot, label side up. The player pulls it in and the CD should begin playing.

Downloaded from www.Manualslib.com manuals search engine

If the ignition or radio is turned off with a CD in the player, it stays in the player. When the ignition or radio is turned on, the CD starts playing where it stopped, if it was the last selected audio source.

When a CD is inserted, the CD symbol displays. As each new track starts to play, the track number displays.

The CD player can play the smaller 3 inch (8 cm) single CDs with an adapter ring. Full-size CDs and the smaller CDs are loaded in the same manner.

If playing a CD-R, the sound quality can be reduced due to CD-R quality, the method of recording, the quality of the music that has been recorded, and the way the CD-R has been handled. There can be an increase in skipping, difficulty in finding tracks, and/or difficulty in loading and ejecting. If these problems occur, check the bottom surface of the CD. If the surface of the CD is damaged, such as cracked, broken, or scratched, the CD will not play properly. If the surface of the CD is soiled, see *Care of Your CDs on page 187* for more information.

If there is no apparent damage, try a known good CD.

Notice: **If you add any label to a CD, insert more than one CD into the slot at a time, or attempt to play scratched or damaged CDs, you could damage the CD player. When using the CD player, use only CDs in good condition without any label, load one CD at a time, and keep the CD player and the loading slot free of foreign materials, liquids, and debris.**

Do not add any label to a CD, it could get caught in the CD player. If a CD is recorded on a personal computer and a description label is needed, try labeling the top of the recorded CD with a marking pen.

If an error displays, see “CD Messages” later in this section.

⏏ **EJECT:** Press the CD eject button to eject the CD. If the CD is not removed, after several seconds, the CD automatically pulls back into the player.

♫ **(Tune):** Turn this knob to select tracks on the CD currently playing.

Downloaded from www.Manualslib.com manuals search engine

⏮ **SEEK ⏭ :** Press the left SEEK arrow to go to the start of the current track, if more than ten seconds have played. Press the right SEEK arrow to go to the next track. If either SEEK arrow is held or pressed multiple times, the player continues moving backward or forward through the CD.

◁◁ **REV (Reverse):** Press and hold this button to reverse playback quickly. You will hear sound at a reduced volume. Release this pushbutton to resume playing the track. The elapsed time of the track displays.

▷▷ **FWD (Fast Forward):** Press and hold this pushbutton to advance playback quickly. You will hear sound at a reduced volume. Release this pushbutton to resume playing the track. The elapsed time of the track displays.

RDM (Random): With the random setting, you can listen to CD tracks in random, rather than sequential order. To use random, do the following:

1. Press this button to play tracks from the CD you are listening to in random order. The random icon displays.
2. Press this button again to turn off random play. The random icon disappears from the display.

RPT (Repeat): With the repeat setting, one track can be repeated.

To repeat the track you are listening to, press and release the RPT button. An arrow symbol displays. Press RPT again to turn off repeat play.

i (Information): Press this button to switch the display between the track number, elapsed time of the track, and the time. When the ignition is off, press this button to display the time.

BAND: Press this button to listen to the radio while a CD is playing. The CD remains inside the radio for future listening.

CD/AUX (CD/Auxiliary): Press this button to play a CD while listening to the radio. The CD icon and track number displays while a CD is in the player. Press this button again and the system automatically searches for an auxiliary input device such as a portable audio player.

Downloaded from www.Manualslib.com manuals search engine

CD Messages

CHECK DISC: If an error message displays and/or the CD comes out, it could be for one of the following reasons:

- It is very hot. When the temperature returns to normal, the CD should play.
- You are driving on a very rough road. When the road becomes smoother, the CD should play.
- The CD is dirty, scratched, wet, or upside down.
- The air is very humid. If so, wait about an hour and try again.
- There could have been a problem while burning the CD-R.
- The label could be caught in the CD player.

If the CD is not playing correctly, for any other reason, try a known good CD.

If any error occurs repeatedly or if an error cannot be corrected, contact your dealer. If the radio displays an error message, write it down and provide it to your dealer while reporting the problem.

Using the Auxiliary Input Jack

Your radio system has an auxiliary input jack located on the lower right side of the faceplate. This is not an audio output; do not plug the headphone set into the front auxiliary input jack. You can however, connect an external audio device such as an iPod, laptop computer, MP3 player, CD changer, or cassette tape player, etc. to the auxiliary input jack for use as another source for audio listening.

Drivers are encouraged to set up any auxiliary device while the vehicle is in PARK (P). See *Defensive Driving on page 190* for more information on driver distraction.

To use a portable audio player, connect a 3.5 mm (1/8 inch) cable to the radio's front auxiliary input jack. When a device is connected, press the radio CD/AUX button to begin playing audio from the device over the car speakers.

Downloaded from www.Manualslib.com manuals search engine

⏻ **(Power/Volume):** Turn this knob clockwise or counterclockwise to increase or decrease the volume of the portable player. You might need to make additional volume adjustments from the portable device.

BAND: Press this button to listen to the radio while a portable audio device is playing. The portable audio device continues playing, so you might want to stop it or turn it off.

CD/AUX (CD/Auxiliary): Press this button to play a CD while a portable audio device is playing. Press this button again and the system begins playing audio from the connected portable audio player. If a portable audio player is not connected, “No Aux” displays.

Radio with CD (MP3)

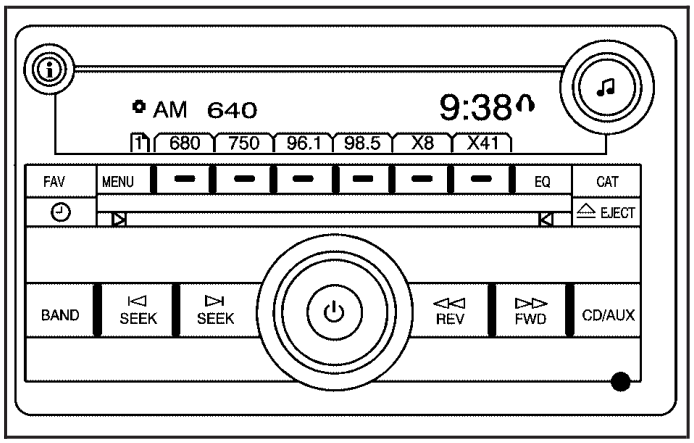

Radio with CD (MP3) shown, Radio with Six-Disc CD (MP3) similar

Downloaded from www.Manualslib.com manuals search engine

Radio Data System (RDS)

The audio system has a Radio Data System (RDS). The RDS feature is available for use only on FM stations that broadcast RDS information. This system relies upon receiving specific information from these stations and only works when the information is available. While the radio is tuned to an FM-RDS station, the station name or call letters appears on the display. In rare cases, a radio station can broadcast incorrect information that causes the radio features to work improperly. If this happens, contact the radio station.

XM™ Satellite Radio Service

XM™ is a satellite radio service that is based in the 48 contiguous United States and Canada. XM™ offers a large variety of coast-to-coast channels including music, news, sports, talk, traffic/weather (U.S. subscribers), and children's programming. XM™ provides digital quality audio and text information that includes song title and artist name. A service fee is required in order to receive the XM™ service. For more information, contact XM™; In the U.S. at www.xmradio.com or call 1-800-852-XMXM (9696) or in Canada at www.xmradio.ca or call 1-877-GET-XMSR (438-9677).

Playing the Radio

⏻ **(Power/Volume):** Press this knob to turn the system on and off.

Turn this knob clockwise or counterclockwise to increase or decrease the volume.

Speed Compensated Volume (SCV): The radio has Speed Compensated Volume (SCV). While SCV is on, the radio volume automatically adjusts to compensate for road and wind noise as your speed changes while driving. That way, the volume level should sound about the same as you drive. To activate SCV:

1. Set the radio volume to the desired level.
2. Press the MENU button to display the radio setup menu.
3. Press the pushbutton under the AUTO VOLUM (automatic volume) label on the radio display.
4. Press the pushbutton under the desired Speed Compensated Volume setting (OFF, Low, Med (medium), or High) to select the level of radio volume compensation. The display times out after approximately 10 seconds. Each higher setting allows for more radio volume compensation at faster vehicle speeds.

Downloaded from www.Manualslib.com manuals search engine

Finding a Station

BAND: Press this button to switch between AM, FM, or XM™ (if equipped). The selection displays.

♫ (Tune): Turn this knob to select radio stations.

⏮ SEEK ⏭ : Press the right or left SEEK arrow to go to the next or to the previous station and stay there.

To scan stations, press and hold either SEEK arrow for a few seconds until a beep sounds. The radio goes to a station, plays for a few seconds, then goes on to the next station. Press either SEEK arrow again to stop scanning.

The radio only seeks and scans stations with a strong signal that are in the selected band.

i (Information) (XM™ Satellite Radio Service, MP3, and RDS Features): Press the information button to display additional text information related to the current FM-RDS or XM™ station, or MP3 song. A choice of additional information such as: Channel, Song, Artist, and CAT (category) can display. Continue pressing the information button to highlight the desired label, or press the pushbutton positioned under any one of the labels and the information about that label displays.

While information is not available, No Info displays.

Storing a Radio Station as a Favorite

Drivers are encouraged to set up their radio station favorites while the vehicle is parked. Tune to your favorite stations using the presets, favorites button, and steering wheel controls if the vehicle has this feature. See *Defensive Driving on page 190*.

FAV (Favorites): A maximum of 36 stations can be programmed as favorites using the six pushbuttons positioned below the radio station frequency labels and by using the radio favorites page button (FAV button). Press the FAV button to go through up to six pages of favorites, each having six favorite stations available per page. Each page of favorites can contain any combination of AM, FM, or XM™ (if equipped) stations. To store a station as a favorite, perform the following steps:

1. Tune to the desired radio station.
2. Press the FAV button to display the page where you want the station stored.

Downloaded from www.Manualslib.com manuals search engine

3. Press and hold one of the six pushbuttons until a beep sounds. When that pushbutton is pressed and released, the station that was set, returns.
4. Repeat the steps for each pushbutton radio station you want stored as a favorite.

The number of favorites pages can be setup using the MENU button. To setup the number of favorites pages, perform the following steps:

1. Press the MENU button to display the radio setup menu.
2. Press the pushbutton located below the FAV 1 through 6 label.
3. Select the desired number of favorites pages by pressing the pushbutton located below the displayed page numbers.
4. Press the FAV button, or let the menu time out, to return to the original main radio screen showing the radio station frequency labels and to begin the process of programming your favorites for the chosen amount of numbered pages.

Setting the Tone (Bass/Midrange/Treble)

BASS/MID/TREB (Bass, Midrange, or Treble): To adjust bass, midrange, or treble, press the tune knob until the tone control labels display. Continue pressing to highlight the desired label, or press the pushbutton positioned under the desired label. Turn the tune knob clockwise or counterclockwise to adjust the highlighted setting. The highlighted setting can be adjusted by pressing either the SEEK, FWD (forward) or REV (reverse) button until the desired levels are obtained. If a station's frequency is weak, or has static, decrease the treble.

To quickly adjust bass, midrange, or treble to the middle position, press the pushbutton positioned under the BASS, MID, or TREB label for more than two seconds. A beep sounds and the level adjusts to the middle position.

To quickly adjust all tone and speaker controls to the middle position, press the tune knob for more than two seconds until a beep sounds.

Downloaded from www.Manualslib.com manuals search engine

EQ (Equalization): Press this button to select preset equalization settings.

To return to the manual mode, press the EQ button until Manual displays or start to manually adjust the bass, midrange, or treble by pressing the tune knob.

Adjusting the Speakers (Balance/Fade)

BAL/FADE (Balance/Fade): To adjust balance or fade, press the tune knob until the speaker control labels display. Continue pressing to highlight the desired label, or press the pushbutton positioned under the desired label. Turn the tune knob clockwise or counterclockwise to adjust the highlighted setting. The highlighted setting can be adjusted by pressing either the SEEK, FWD, or REV button until the desired levels are obtained.

To quickly adjust balance or fade to the middle position, press the pushbutton positioned under the BAL or FADE label for more than two seconds. A beep sounds and the level adjusts to the middle position.

To quickly adjust all speaker and tone controls to the middle position, press the tune knob for more than two seconds until a beep sounds.

Finding a Category (CAT) Station

CAT (Category): The CAT button is used to find XM™ stations while the radio is in the XM™ mode. To find XM™ channels within a desired category, perform the following:

1. Press the BAND button until the XM™ frequency is displayed. Press the CAT button to display the category labels on the radio display. Continue pressing the CAT button until the desired category name displays.
2. Press either of the two buttons below the desired category label to immediately tune to the first XM™ station associated with that category.
3. Turn the tune knob, press the buttons below the right or left arrows displayed, or press the right or left SEEK buttons to go to the next or previous XM™ station within the selected category.
4. To exit the category search mode, press the FAV button or BAND button to display your favorites again.

Downloaded from www.Manualslib.com manuals search engine

Undesired XM™ categories can be removed through the setup menu. To remove an undesired category, perform the following:

1. Press the MENU button to display the radio setup menu.
2. Press the pushbutton located below the XM CAT label.
3. Turn the tune knob to display the category you want removed.
4. Press the pushbutton located under the Remove label until the category name along with the word Removed displays.
5. Repeat the steps to remove more categories.

Removed categories can be restored by pressing the pushbutton under the Add label when a removed category displays or by pressing the pushbutton under the Restore All label.

The radio does not let you to remove or add categories while the vehicle is moving faster than 5 mph (8 km/h).

Radio Messages

Calibration Error: The audio system has been calibrated for your vehicle from the factory. If Calibration Error displays, it means that the radio has not been configured properly for your vehicle and it must be returned to your dealer for service.

Locked: This message displays when the THEFTLOCK® system has locked up the radio. Take the vehicle to your dealer for service.

If any error occurs repeatedly or if an error cannot be corrected, contact your dealer.

Radio Messages for XM Only

See *XM Radio Messages on page 183* later in this section for further detail.

Playing a CD (Single CD Player)

Insert a CD partway into the slot, label side up. The player pulls it in and the CD should begin playing.

Downloaded from www.Manualslib.com manuals search engine

Playing a CD(s) (Six-Disc CD Player)

LOAD ⊽: Press this button to load CDs into the CD player. This CD player holds up to six CDs.

To insert one CD, do the following:

1. Press and release the load button.
2. Wait for the message to insert the disc.
3. Load a CD. Insert the CD partway into the slot, label side up. The player pulls the CD in.

To insert multiple CDs, do the following:

1. Press and hold the load button for two seconds. You will hear a beep and Load All Discs displays.
2. Follow the displayed instruction on when to insert the discs. The CD player takes up to six CDs.
3. Press the Load button again to cancel loading more CDs.

If the ignition or radio is turned off, with a CD in the player, it stays in the player. When the ignition or radio is turned on, the CD starts playing where it stopped, if it was the last selected audio source.

When a CD is inserted, the CD symbol displays on the CD. As each new track starts to play, the track number displays.

The CD player can play the smaller 3 inch (8 cm) single CDs with an adapter ring. Full-size CDs and the smaller CDs are loaded in the same manner.

If playing a CD-R, the sound quality can be reduced due to CD-R quality, the method of recording, the quality of the music that has been recorded, and the way the CD-R has been handled. There can be an increase in skipping, difficulty in finding tracks, and/or difficulty in loading and ejecting. If these problems occur, check the bottom surface of the CD. If the surface of the CD is damaged, such as cracked, broken, or scratched, the CD will not play properly. If the surface of the CD is soiled, see *Care of Your CDs on page 187* for more information.

If there is no apparent damage, try a known good CD.

Notice: **If you add any label to a CD, insert more than one CD into the slot at a time, or attempt to play scratched or damaged CDs, you could damage the CD player. When using the CD player, use only CDs in good condition without any label, load one CD at a time, and keep the CD player and the loading slot free of foreign materials, liquids, and debris.**

Downloaded from www.Manualslib.com manuals search engine

Do not add any label to a CD, it could get caught in the CD player. If a CD is recorded on a personal computer and a description label is needed, try labeling the top of the recorded CD with a marking pen.

If an error displays, see “CD Messages” later in this section.

⏏ **EJECT:** Press the CD eject button to eject CD(s). To eject the CD that is currently playing, press and release this button. A beep sounds and Ejecting Disc displays. Once the disc is ejected, Remove Disc displays. The CD can be removed. If the CD is not removed after several seconds, the CD automatically pulls back into the player and begins playing.

For the Six-Disc CD player, press and hold the eject button for two seconds to eject all discs.

♫ **(Tune):** Turn this knob to select tracks on the CD currently playing.

⏮ **SEEK** ⏭ **:** Press the left SEEK arrow to go to the start of the current track, if more than ten seconds have played. Press the right SEEK arrow to go to the next track. If either SEEK arrow is held, or pressed multiple times, the player continues moving backward or forward through the tracks on the CD.

◁◁ **REV (Reverse):** Press and hold this button to reverse playback quickly. You will hear sound at a reduced volume. Release this pushbutton to resume playing the track. The elapsed time of the track displays.

▷▷ **FWD (Fast Forward):** Press and hold this button to advance playback quickly. You will hear sound at a reduced volume. Release this button to resume playing the track. The elapsed time of the track displays.

Downloaded from www.Manualslib.com manuals search engine

RDM (Random): With the random setting, you can listen to the tracks in random, rather than sequential order, on one CD or all CDs in a six-disc CD player. To use random, do one of the following:

- Press the CD/AUX button, or for a single CD player, insert a disc partway into the slot of the CD player. A RDM label displays.

  To play the tracks from the single CD in random order, press the pushbutton positioned under the RDM label until Random Current Disc displays. Press the pushbutton again to turn off random play.

- Press the CD/AUX button, or for a six-disc CD player, press and hold the LOAD button. A beep sounds and Load All Discs displays. Insert one or more discs partway into the slot of the CD player.

  To play tracks from all CDs loaded in a six-disc CD player in random order, press the pushbutton positioned under the RDM label until Randomize All Discs displays. Press the same pushbutton again to turn off random play.

BAND: Press this button to listen to the radio while a CD is playing. The CD remains inside the radio for future listening.

CD/AUX (CD/Auxiliary): Press this button to play a CD while listening to the radio. The CD icon and a message showing disc and/or track number displays when a CD is in the player. Press this button again and the system automatically searches for an auxiliary input device, such as a portable audio player. If a portable audio player is not connected, “No Aux Input Device” displays.

Playing an MP3 CD-R or CD-RW Disc

Your vehicle’s radio system may have the MP3 feature. If it has this feature, it is capable of playing an MP3 CD-R or CD-RW disc. For more information on how to play an MP3 CD-R or CD-RW disc, see *Using an MP3 on page 176* later in this section.

Downloaded from www.Manualslib.com manuals search engine

CD Messages

CHECK DISC: If an error message displays and/or the CD comes out, it could be for one of the following reasons:

- It is very hot. When the temperature returns to normal, the CD should play.
- You are driving on a very rough road. When the road becomes smoother, the CD should play.
- The CD is dirty, scratched, wet, or upside down.
- The air is very humid. If so, wait about an hour and try again.
- There could have been a problem while burning the CD.
- The label could be caught in the CD player.

If the CD is not playing correctly, for any other reason, try a known good CD.

If any error occurs repeatedly or if an error cannot be corrected, contact your dealer. If the radio displays an error message, write it down and provide it to your dealer while reporting the problem.

Using the Auxiliary Input Jack

Your radio system has an auxiliary input jack located on the lower right side of the faceplate. This is not an audio output; do not plug the headphone set into the front auxiliary input jack. You can however, connect an external audio device such as an iPod, laptop computer, MP3 player, CD changer, or cassette tape player, etc. to the auxiliary input jack for use as another source for audio listening.

Drivers are encouraged to set up any auxiliary device while the vehicle is in PARK (P). See *Defensive Driving on page 190* for more information on driver distraction.

To use a portable audio player, connect a 3.5 mm (1/8 inch) cable to the radio's front auxiliary input jack. When a device is connected, press the radio CD/AUX button to begin playing audio from the device over the vehicle's speakers.

Downloaded from www.Manualslib.com manuals search engine

⏻ **(Power/Volume):** Turn this knob clockwise or counterclockwise to increase or decrease the volume of the portable player. You might need to make additional volume adjustments from the portable device.

BAND: Press this button to listen to the radio while a portable audio device is playing. The portable audio device continues to play, so you might want to stop it or turn it off.

CD/AUX (CD/Auxiliary): Press this button to play a CD while a portable audio device is playing. Press this button again and the system begins to play audio from the connected portable audio player. If a portable audio player is not connected, “No Aux Input Device” displays.

Using an MP3

MP3 CD-R or CD-RW Disc

The radio plays MP3 files that were recorded on a CD-R or CD-RW disc. The files can be recorded with the following fixed bit rates: 32 kbps, 40 kbps, 56 kbps, 64 kbps, 80 kbps, 96 kbps, 112 kbps, 128 kbps, 160 kbps, 192 kbps, 224 kbps, 256 kbps, and 320 kbps or a variable bit rate. Song title, artist name, and album can display when recorded using ID3 tags version 1 and 2.

Compressed Audio

The radio also plays discs that contain both uncompressed CD audio (.CDA files) and MP3 files. By default the radio reads only the uncompressed audio and ignores the MP3 files. Pressing the CAT (category) button toggles between compressed and uncompressed audio format.

Downloaded from www.Manualslib.com manuals search engine

MP3 Format

If you burn your own MP3 disc on a personal computer:

- Make sure the MP3 files are recorded on a CD-R or CD-RW disc.
- Avoid mixing standard audio and MP3 files on one disc.
- The CD player is able to read and play a maximum of 50 folders, 50 playlists, and 255 files.
- Create a folder structure that makes it easy to find songs while driving. Organize songs by albums using one folder for each album. Each folder or album should contain 18 songs or less.
- Avoid subfolders. The system can support up to 8 subfolders deep, however, keep the total number of folders to a minimum in order to reduce the complexity and confusion in trying to locate a particular folder during playback.
- Make sure playlists have a .mp3 or .wpl extension (other file extensions may not work).
- Minimize the length of the file, folder, or playlist names. Long file, folder, or playlist names, or a combination of a large number of files and folders, or playlists can cause the player to be unable to play up to the maximum number of files, folders, playlists, or sessions. If you wish to play a large number of files, folders, playlists, or sessions, minimize the length of the file, folder, or playlist name. Long names also take up more space on the display, and might not fully display.
- Finalize the audio disc before you burn it. Trying to add music to an existing disc can cause the disc not to function in the player.

Change playlists by using the previous and next folder buttons, the tuner knob, or the seek buttons. An MP3 CD-R that was recorded using no file folders can also be played. If a CD-R contains more than the maximum of 50 folders, 50 playlists, and 255 files, the player lets you access and navigate up to the maximum, but all items over the maximum are not accessible.

Downloaded from www.Manualslib.com manuals search engine

Root Directory

The root directory of the CD-R is treated as a folder. If the root directory has compressed audio files, the directory displays as F1 ROOT. All files contained directly under the root directory are accessed prior to any root directory folders. However, playlists (Px) are always accessed before root folders or files.

Empty Directory or Folder

If a root directory or a folder exists somewhere in the file structure that contains only folders/subfolders and no compressed files directly beneath them, the player advances to the next folder in the file structure that contains compressed audio files. The empty folder does not display.

No Folder

When the CD-R contains only compressed files, the files are located under the root folder. The next and previous folder functions are not displayed on a CD-R that was recorded without folders or playlists. When displaying the name of the folder the radio displays ROOT.

When the CD-R contains only playlists and compressed audio files, but no folders, all files are located under the root folder. The folder down and the folder up buttons search playlists (Px) first and then goes to the root folder. When the radio displays the name of the folder, the radio displays ROOT.

Order of Play

Tracks recorded to the CD-R are played in the following order:

- Play begins from the first track in the first playlist and continues sequentially through all tracks in each playlist. When the last track of the last playlist has played, play continues from the first track of the first playlist.
- Play begins from the first track in the first folder and continues sequentially through all tracks in each folder. When the last track of the last folder has played, play continues from the first track of the first folder.

When play enters a new folder, the display does not automatically show the new folder name unless the folder mode was chosen as the default display. The new track name displays.

Downloaded from www.Manualslib.com manuals search engine

File System and Naming

The song name that displays is the song name that is contained in the ID3 tag. If the song name is not present in the ID3 tag, then the radio displays the file name without the extension (such as .mp3) as the track name.

Track names longer than 32 characters or four pages are shortened. Parts of words on the last page of text and the extension of the filename does not display.

Preprogrammed Playlists

Preprogrammed playlists that were created using WinAmp™, MusicMatch™, or Real Jukebox™ software, can be accessed, however, they cannot be edited using the radio. These playlists are treated as special folders containing compressed audio song files.

Playing an MP3

Insert a CD-R partway into the slot (Single CD Player), or press the load button and wait for the message to insert disc (Six-Disc CD Player), label side up. The player pulls it in, and the CD-R should begin playing.

If the ignition or radio is turned off with a CD-R in the player, it stays in the player. When the ignition or radio is turned on, the CD-R starts to play where it stopped, if it was the last selected audio source.

As each new track starts to play, the track number and song title displays.

The CD player can play the smaller 3 inch (8 cm) single CD-Rs with an adapter ring. Full-size CD-Rs and the smaller CD-Rs are loaded in the same manner.

Downloaded from www.Manualslib.com manuals search engine

If playing a CD-R, the sound quality can be reduced due to CD-R quality, the method of recording, the quality of the music that has been recorded, and the way the CD-R has been handled. There can be an increase in skipping, difficulty in finding tracks, and/or difficulty in loading and ejecting. If these problems occur, check the bottom surface of the CD. If the surface of the CD is damaged, such as cracked, broken, or scratched, the CD will not play properly. If the surface of the CD is soiled, see *Care of Your CDs on page 187* for more information.

If there is no apparent damage, try a known good CD.

Notice: **If you add any label to a CD, insert more than one CD into the slot at a time, or attempt to play scratched or damaged CDs, you could damage the CD player. When using the CD player, use only CDs in good condition without any label, load one CD at a time, and keep the CD player and the loading slot free of foreign materials, liquids, and debris.**

Do not add any label to a CD, it could get caught in the CD player. If a CD is recorded on a personal computer and a description label is needed, try labeling the top of the recorded CD with a marking pen.

If an error displays, see “CD Messages” later in this section.

⏏ **EJECT:** Press the CD eject button to eject CD-R(s). To eject the CD-R that is currently playing, press and release this button. A beep will sound and Ejecting Disc displays. Once the disc is ejected, Remove Disc displays. The CD-R can be removed. If the CD-R is not removed, after several seconds, the CD-R automatically pulls back into the player and begins playing. For the Six-Disc CD player, press and hold the eject button for two seconds to eject all discs.

♫ **(Tune):** Turn this knob to select MP3 files on the CD-R currently playing.

Downloaded from www.Manualslib.com manuals search engine

⏮ **SEEK** ⏭ **:** Press the left SEEK arrow to go to the start of the current MP3 file, if more than ten seconds have played. Press the right SEEK arrow to go to the next MP3 file. If either SEEK arrow is held or pressed multiple times, the player continues moving backward or forward through MP3 files on the CD.

< 🗀 **(Previous Folder):** Press the pushbutton positioned under the Folder label to go to the first track in the previous folder.

🗀 > **(Next Folder):** Press the pushbutton positioned under the Folder label to go to the first track in the next folder.

◁◁ **REV (Reverse):** Press and hold this button to reverse playback quickly within an MP3 file. You will hear sound at a reduced volume. Release this button to resume playing the file. The elapsed time of the file displays.

▷▷ **FWD (Fast Forward):** Press and hold this button to advance playback quickly within an MP3 file. You will hear sound at a reduced volume. Release this button to resume playing the file. The elapsed time of the file displays.

RDM (Random): With the random setting, MP3 files on the CD-R can be played in random, rather than sequential order, on one CD-R or all discs in a six-disc CD player. To use random, do one of the following:

1. To play MP3 files in random order from the CD-R that is currently playing, press the pushbutton positioned under the RDM label until Random Current Disc displays. Press the same pushbutton again to turn off random play.
2. To play songs from all CDs loaded in a six-disc CD player in random order, press the pushbutton positioned under the RDM label until Randomize All Discs displays. Press the same pushbutton again to turn off random play.

(Music Navigator): Use the music navigator feature to play MP3 files on the CD-R in order by artist or album. Press the pushbutton located below the music navigator label. The player scans the disc to sort the files by artist and album ID3 tag information. It can take several minutes to scan the disc depending on the number of MP3 files recorded to the CD-R. The radio can begin playing while it is scanning the disc in the background. When the scan is finished, the CD-R begins playing again.

Downloaded from www.Manualslib.com manuals search engine

Once the disc has been scanned, the player defaults to playing MP3 files in order by artist. The current artist playing is shown on the second line of the display between the arrows. Once all songs by that artist are played, the player moves to the next artist in alphabetical order on the CD-R and begins playing MP3 files by that artist. If you want to listen to MP3 files by another artist, press the pushbutton located below either arrow button. The CD goes to the next or previous artist in alphabetical order. Continue pressing either button until the desired artist displays.

To change from playback by artist to playback by album, press the pushbutton located below the Sort By label. From the sort screen, push one of the buttons below the album button. Press the pushbutton below the back label to return to the main music navigator screen. The album name displays on the second line between the arrows and songs from the current album and begins to play. Once all songs from that album are played, the player moves to the next album in alphabetical order on the CD-R and begins playing MP3 files from that album.

To exit music navigator mode, press the pushbutton below the Back label to return to normal MP3 playback.

BAND: Press this button to listen to the radio while a CD is playing. The CD remains inside the radio for future listening.

CD/AUX (CD/Auxiliary): Press this button to play a CD while listening to the radio. The CD icon and a message showing disc and/or track number displays while a CD is in the player. Press this button again and the system automatically searches for an auxiliary input device such as a portable audio player. If a portable audio player is not connected, “No Aux Input Device” displays.

Downloaded from www.Manualslib.com manuals search engine

XM Radio Messages

Radio Display Message	Condition	Action Required
XL (Explicit Language Channels)	XL on the radio display, after the channel name, indicates content with explicit language.	These channels, or any others, can be blocked at a customer's request, by calling 1-800-852-XMXM (9696).
XM Updating	Updating encryption code	The encryption code in the receiver is being updated, and no action is required. This process should take no longer than 30 seconds.
No XM Signal	Loss of signal	The system is functioning correctly, but the vehicle is in a location that is blocking the XM™ signal. When you move into an open area, the signal should return.
Loading XM	Acquiring channel audio (after four second delay)	The audio system is acquiring and processing audio and text data. No action is needed. This message should disappear shortly.
Channel Off Air	Channel not in service	This channel is not currently in service. Tune to another channel.
Channel Unavail	Channel no longer available	This previously assigned channel is no longer assigned. Tune to another station. If this station was one of the presets, choose another station for that preset button.
No Artist Info	Artist Name/Feature not available	No artist information is available at this time on this channel. The system is working properly.
No Title Info	Song/Program Title not available	No song title information is available at this time on this channel. The system is working properly.

Downloaded from www.Manualslib.com manuals search engine

Radio Display Message	Condition	Action Required
No CAT Info	Category Name not available	No category information is available at this time on this channel. The system is working properly.
No Information	No Text/Informational message available	No text or informational messages are available at this time on this channel. The system is working properly.
CAT Not Found	No channel available for the chosen category	There are no channels available for the selected category. The system is working properly.
XM TheftLocked	Theftlock® active	The XM™ receiver in the vehicle may have previously been in another vehicle. For security purposes, XM™ receivers cannot be swapped between vehicles. If this message displays after having your vehicle serviced, check with your dealer.
XM Radio ID	Radio ID label (channel 0)	If tuned to channel 0, this message alternates with the XM™ Radio eight digit radio ID label. This label is needed to activate the service.
Unknown	Radio ID not known (should only be if hardware failure)	If this message is received when tuned to channel 0, there could be a receiver fault. Consult with your dealer.
Check XM Receivr	Hardware failure	If this message does not clear within a short period of time, the receiver could have a fault. Consult with your dealer.
XM Not Available	XM™ Not Available	If this message does not clear within a short period of time, the receiver could have a fault. Consult with your dealer.

Downloaded from www.Manualslib.com manuals search engine

Theft-Deterrent Feature

THEFTLOCK® is designed to discourage theft of your vehicle's radio. The feature works automatically by learning a portion of the Vehicle Identification Number (VIN). If the radio is moved to a different vehicle, it will not operate and LOCK or LOCKED will appear on the display.

With THEFTLOCK® activated, the radio will not operate if stolen.

Audio Steering Wheel Controls

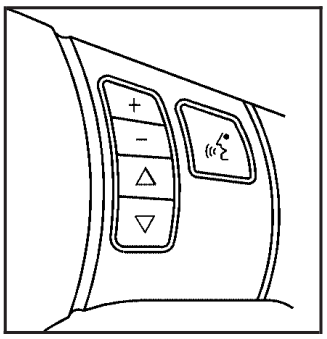

Radio controls are located on the right side of the steering wheel. If your vehicle has this feature, some audio controls can be adjusted at this location. They include the following:

▽ △: Press the up or the down arrow to go to the next or to the previous stored radio station and stay there. Press and hold the up or down arrow longer than three-quarters of a second to advance to the next or previous station with a strong signal in the selected band.

When a CD is playing, press the up or the down arrow to go to the next or previous track. Press and hold the up or down arrow longer than three-quarters of a second to continue advancing ahead or reversing back, to other tracks within the disc.

Downloaded from www.Manualslib.com manuals search engine

+ – (Volume): Press the plus or minus button to increase or to decrease the volume.

(Mute/Voice Activation): Press this button to silence the system. Press this button again to turn the sound on. If your vehicle is equipped with OnStar®, press and hold this button for two seconds to activate voice on the OnStar system. See the *OnStar® System on page 94* in this manual for more information.

Radio Reception

You may experience frequency interference and static during normal radio reception if items such as cellphone chargers, vehicle convenience accessories, and external electronic devices are plugged into the accessory power outlet. If there is interference or static, unplug the item from the accessory power outlet.

AM

The range for most AM stations is greater than for FM, especially at night. The longer range can cause station frequencies to interfere with each other. For better radio reception, most AM radio stations will boost the power levels during the day, and then reduce these levels during the night. Static can also occur when things like storms and power lines interfere with radio reception. When this happens, try reducing the treble on your radio.

FM Stereo

FM stereo will give the best sound, but FM signals will reach only about 10 to 40 miles (16 to 65 km). Tall buildings or hills can interfere with FM signals, causing the sound to fade in and out.

XM™ Satellite Radio Service

XM™ Satellite Radio Service gives digital radio reception from coast-to-coast in the 48 contiguous United States, and in Canada. Just as with FM, tall buildings or hills can interfere with satellite radio signals, causing the sound to fade in and out. In addition, traveling or standing under heavy foliage, bridges, garages, or tunnels may cause loss of the XM™ signal for a period of time. The radio may display NO XM SIGNAL to indicate interference.

Downloaded from www.Manualslib.com manuals search engine

Care of Your CDs

Handle CDs carefully. Store them in their original cases or other protective cases and away from direct sunlight and dust. The CD player scans the bottom surface of the disc. If the surface of a CD is damaged, such as cracked, broken, or scratched, the CD will not play properly or not at all. If the surface of a CD is soiled, take a soft, lint free cloth or dampen a clean, soft cloth in a mild, neutral detergent solution mixed with water, and clean it. Make sure the wiping process starts from the center to the edge.

Do not touch the bottom side of a CD while handling it; this could damage the surface. Pick up CDs by grasping the outer edges or the edge of the hole and the outer edge.

Care of the CD Player

Do not use CD lens cleaners for CD players because the lens of the CD optics can become contaminated by lubricants.

Fixed Mast Antenna

The fixed mast antenna can withstand most car washes without being damaged. If the mast should ever become slightly bent, straighten it out by hand. If the mast is badly bent, replace it.

Check occasionally to make sure the mast is still tightened to the fender. If tightening is required, tighten by hand, then with a wrench one quarter turn.

XM™ Satellite Radio Antenna System

Your vehicle may have the XM™ Satellite Radio antenna that is located on the trunk of your vehicle. Keep this antenna clear of snow and ice build up for clear radio reception.

Downloaded from www.Manualslib.com manuals search engine

NOTES

Downloaded from www.Manualslib.com manuals search engine

Section 4 Driving Your Vehicle

Your Driving, the Road, and Your Vehicle 190
Defensive Driving 190
Drunken Driving 191
Control of a Vehicle 194
Braking 194
Anti-Lock Brake System (ABS) 195
Braking in Emergencies 197
Traction Control System (TCS) 198
Limited-Slip Rear Axle 200
Electronic Stability Control 200
Steering 203
Off-Road Recovery 206
Passing 206
Loss of Control 208
Driving at Night 209
Driving in Rain and on Wet Roads 211
City Driving 214
Freeway Driving 215
Before Leaving on a Long Trip 216
Highway Hypnosis 217
Hill and Mountain Roads 218
Winter Driving 220
If Your Vehicle is Stuck in Sand, Mud, Ice, or Snow 224
Rocking Your Vehicle to Get It Out 225
Loading Your Vehicle 226
Towing 231
Towing Your Vehicle 231
Recreational Vehicle Towing 231
Towing a Trailer 231

Downloaded from www.Manualslib.com manuals search engine

Your Driving, the Road, and Your Vehicle

Defensive Driving

The best advice anyone can give about driving is: Drive defensively.

Please start with a very important safety device in your vehicle: Buckle up. See *Safety Belts: They Are for Everyone on page 12*.

⚠ CAUTION:

Defensive driving really means "Be ready for anything." On city streets, rural roads, or expressways, it means "Always expect the unexpected." Assume that pedestrians or other drivers are going to be careless and make mistakes. Anticipate what they might do and be ready. Rear-end collisions are about the most preventable of accidents. Yet they are common. Allow enough following distance. Defensive driving requires that a driver concentrate on the driving task. Anything that distracts from the driving task makes proper defensive driving more difficult and can even cause a collision, with resulting injury. Ask a passenger to help do these things, or pull off the road in a safe place to do them. These simple defensive driving techniques could save your life.

Downloaded from www.Manualslib.com manuals search engine

Drunken Driving

Death and injury associated with drinking and driving is a national tragedy. It is the number one contributor to the highway death toll, claiming thousands of victims every year.

Alcohol affects four things that anyone needs to drive a vehicle:

- Judgment
- Muscular Coordination
- Vision
- Attentiveness

Police records show that almost half of all motor vehicle-related deaths involve alcohol. In most cases, these deaths are the result of someone who was drinking and driving. In recent years, more than 16,000 annual motor vehicle-related deaths have been associated with the use of alcohol, with more than 300,000 people injured.

Many adults — by some estimates, nearly half the adult population — choose never to drink alcohol, so they never drive after drinking. For persons under 21, it is against the law in every U.S. state to drink alcohol. There are good medical, psychological, and developmental reasons for these laws.

The obvious way to eliminate the leading highway safety problem is for people never to drink alcohol and then drive. But what if people do? How much is “too much” if someone plans to drive? It is a lot less than many might think. Although it depends on each person and situation, here is some general information on the problem.

The Blood Alcohol Concentration (BAC) of someone who is drinking depends upon four things:

- The amount of alcohol consumed
- The drinker’s body weight
- The amount of food that is consumed before and during drinking
- The length of time it has taken the drinker to consume the alcohol

Downloaded from www.Manualslib.com manuals search engine

According to the American Medical Association, a 180 lb (82 kg) person who drinks three 12 ounce (355 ml) bottles of beer in an hour will end up with a BAC of about 0.06 percent. The person would reach the same BAC by drinking three 4 ounce (120 ml) glasses of wine or three mixed drinks if each had 1-1/2 ounces (45 ml) of liquors like whiskey, gin, or vodka.

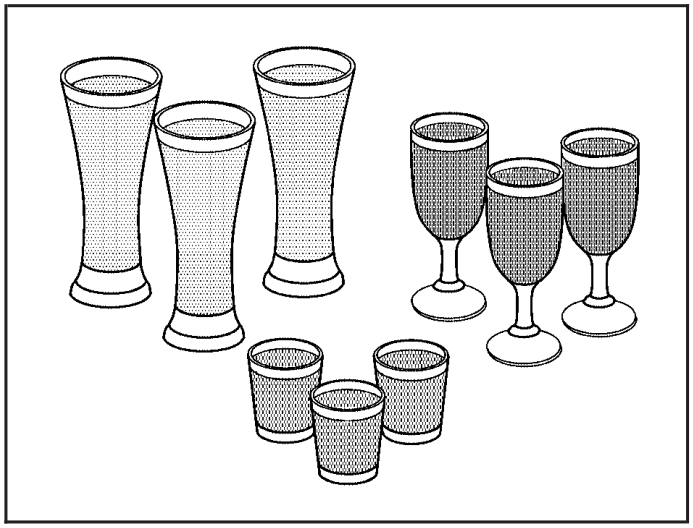

It is the amount of alcohol that counts. For example, if the same person drank three double martinis (3 ounces or 90 ml of liquor each) within an hour, the person's BAC would be close to 0.12 percent. A person who consumes food just before or during drinking will have a somewhat lower BAC level.

There is a gender difference, too. Women generally have a lower relative percentage of body water than men. Since alcohol is carried in body water, this means that a woman generally will reach a higher BAC level than a man of her same body weight will when each has the same number of drinks.

The law in most U.S. states, and throughout Canada, sets the legal limit at 0.08 percent. In some other countries, the limit is even lower. For example, it is 0.05 percent in both France and Germany. The BAC limit for all commercial drivers in the United States is 0.04 percent.

The BAC will be over 0.10 percent after three to six drinks (in one hour). Of course, as we have seen, it depends on how much alcohol is in the drinks, and how quickly the person drinks them.

Downloaded from www.Manualslib.com manuals search engine

But the ability to drive is affected well below a BAC of 0.10 percent. Research shows that the driving skills of many people are impaired at a BAC approaching 0.05 percent, and that the effects are worse at night. All drivers are impaired at BAC levels above 0.05 percent. Statistics show that the chance of being in a collision increases sharply for drivers who have a BAC of 0.05 percent or above. A driver with a BAC level of 0.06 percent has doubled his or her chance of having a collision. At a BAC level of 0.10 percent, the chance of this driver having a collision is 12 times greater; at a level of 0.15 percent, the chance is 25 times greater!

The body takes about an hour to rid itself of the alcohol in one drink. No amount of coffee or number of cold showers will speed that up. "I will be careful" is not the right answer. What if there is an emergency, a need to take sudden action, as when a child darts into the street? A person with even a moderate BAC might not be able to react quickly enough to avoid the collision.

There is something else about drinking and driving that many people do not know. Medical research shows that alcohol in a person's system can make crash injuries worse, especially injuries to the brain, spinal cord, or heart. This means that when anyone who has been drinking — driver or passenger — is in a crash, that person's chance of being killed or permanently disabled is higher than if the person had not been drinking.

⚠ CAUTION:

Drinking and then driving is very dangerous. Your reflexes, perceptions, attentiveness, and judgment can be affected by even a small amount of alcohol. You can have a serious — or even fatal — collision if you drive after drinking. Please do not drink and drive or ride with a driver who has been drinking. Ride home in a cab; or if you are with a group, designate a driver who will not drink.

Downloaded from www.Manualslib.com manuals search engine

Control of a Vehicle

You have three systems that make your vehicle go where you want it to go. They are the brakes, the steering, and the accelerator. All three systems have to do their work at the places where the tires meet the road.

Sometimes, as when you are driving on snow or ice, it is easy to ask more of those control systems than the tires and road can provide. That means you can lose control of your vehicle. See *Traction Control System (TCS) on page 198* and *Electronic Stability Control on page 200*.

Adding non-GM accessories can affect your vehicle's performance. See *Accessories and Modifications on page 235*.

Braking

See *Brake System Warning Light on page 134*.

Braking action involves perception time and reaction time.

First, you have to decide to push on the brake pedal. That is perception time. Then you have to bring up your foot and do it. That is reaction time.

Average reaction time is about three-fourths of a second. But that is only an average. It might be less with one driver and as long as two or three seconds or more with another. Age, physical condition, alertness, coordination, and eyesight all play a part. So do alcohol, drugs, and frustration. But even in three-fourths of a second, a vehicle moving at 60 mph (100 km/h) travels 66 feet (20 m). That could be a lot of distance in an emergency, so keeping enough space between your vehicle and others is important.

And, of course, actual stopping distances vary greatly with the surface of the road, whether it is pavement or gravel; the condition of the road, whether it is wet, dry, or icy; tire tread; the condition of the brakes; the weight of the vehicle; and the amount of brake force applied.

Downloaded from www.Manualslib.com manuals search engine

Avoid needless heavy braking. Some people drive in spurts — heavy acceleration followed by heavy braking — rather than keeping pace with traffic. This is a mistake. The brakes may not have time to cool between hard stops. The brakes will wear out much faster if you do a lot of heavy braking. If you keep pace with the traffic and allow realistic following distances, you will eliminate a lot of unnecessary braking. That means better braking and longer brake life.

If your vehicle's engine ever stops while you are driving, brake normally but do not pump the brakes. If you do, the pedal may get harder to push down. If the engine stops, you will still have some power brake assist. But you will use it when you brake. Once the power assist is used up, it may take longer to stop and the brake pedal will be harder to push.

Adding non-GM accessories can affect your vehicle's performance. See *Accessories and Modifications on page 235*.

Anti-Lock Brake System (ABS)

Your vehicle may have the Anti-Lock Brake System (ABS), an advanced electronic braking system that will help prevent a braking skid.

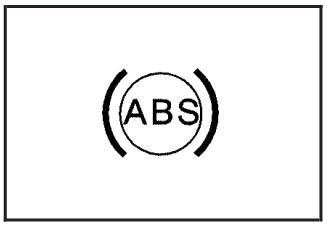

If your vehicle has ABS, this warning light on the instrument panel will come on briefly when you start your vehicle.

When you start your engine, or when you begin to drive away, your ABS will check itself. You may hear a momentary motor or clicking noise while this test is going on, and you may even notice that your brake pedal moves or pulses a little. This is normal.

Downloaded from www.Manualslib.com manuals search engine

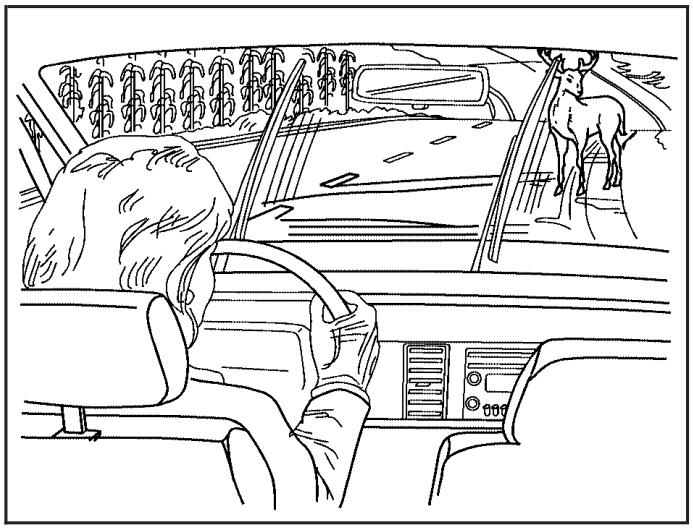

Let us say the road is wet and you are driving safely. Suddenly, an animal jumps out in front of you. You slam on the brakes and continue braking. Here is what happens with ABS:

A computer senses that wheels are slowing down. If one of the wheels is about to stop rolling, the computer will separately work the brakes at each wheel.

ABS can change the brake pressure faster than any driver could. The computer is programmed to make the most of available tire and road conditions. This can help you steer around the obstacle while braking hard.

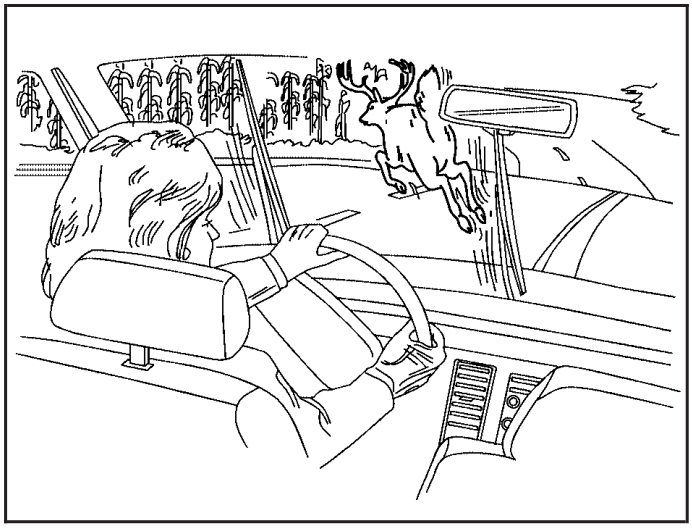

As you brake, your computer keeps receiving updates on wheel speed and controls braking pressure accordingly.

Downloaded from www.Manualslib.com manuals search engine

Remember: ABS does not change the time you need to get your foot up to the brake pedal or always decrease stopping distance. If you get too close to the vehicle in front of you, you will not have time to apply your brakes if that vehicle suddenly slows or stops. Always leave enough room up ahead to stop, even though you have ABS.

Using ABS

Do not pump the brakes. Just hold the brake pedal down firmly and let anti-lock work for you. You may feel a slight brake pedal pulsation or notice some noise, but this is normal.

Braking in Emergencies

At some time, nearly every driver gets into a situation that requires hard braking.

If you have ABS, you can steer and brake at the same time. However, if you do not have ABS, your first reaction — to hit the brake pedal hard and hold it down — may be the wrong thing to do. Your wheels can stop rolling. Once they do, the vehicle cannot respond to your steering. Momentum will carry it in whatever direction it was headed when the wheels stopped rolling. That could be off the road, into the very thing you were trying to avoid, or into traffic.

If you do not have ABS, use a “squeeze” braking technique. This will give you maximum braking while maintaining steering control. You can do this by pushing on the brake pedal with steadily increasing pressure.

In an emergency, you will probably want to squeeze the brakes hard without locking the wheels. If you hear or feel the wheels sliding, ease off the brake pedal. This will help you retain steering control. If you do have ABS, it is different. See *Anti-Lock Brake System (ABS) on page 195*.

In many emergencies, steering can help you more than even the very best braking.

Downloaded from www.Manualslib.com manuals search engine

Traction Control System (TCS)

Your vehicle may have a Traction Control System (TCS) that limits wheel spin. This is especially useful in slippery road conditions. The system operates only if it senses that the rear wheels are spinning too much or are beginning to lose traction. When this happens, the system works the rear brakes and reduces engine power by closing the throttle and managing engine spark to limit wheel spin.

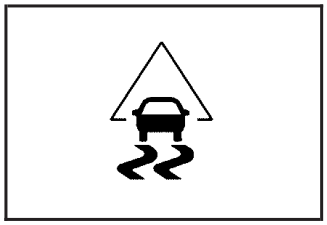

This light will flash when your traction control system is limiting wheel spin.

You may feel or hear the system working, but this is normal.

See *Electronic Stability Control (ESC)/Traction Control System (TCS) Indicator/Warning Light (2.0L Engine Only) on page 136* for more information.

If your vehicle is in cruise control when TCS begins to limit wheel spin, the cruise control will automatically disengage. When road conditions allow you to safely use it again, you may re-engage the cruise control. See *Turn Signal/Multifunction Lever on page 111*.

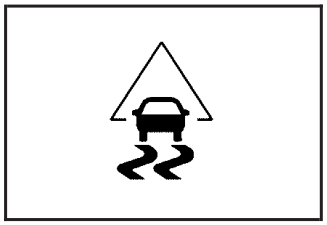

When this light is on solid and either the SERVICE TRACTION or TRACTION OFF message is displayed, the system will not limit wheel spin.

Adjust your driving accordingly. See *DIC Warnings and Messages on page 148* for more information.

The Traction Control System is automatically enabled whenever you start your vehicle. To limit wheel spin, especially in slippery road conditions, you should always leave the system enabled. You can turn TCS off if you ever need to.

Downloaded from www.Manualslib.com manuals search engine

It is recommended to leave the system on for normal driving conditions, but it may be necessary to turn the system off if your vehicle is stuck in sand, mud, ice or snow, and you want to "rock" your vehicle to attempt to free it. It may also be necessary to turn off the system when driving in extreme off-road conditions where high wheel spin is required. See *If Your Vehicle is Stuck in Sand, Mud, Ice, or Snow on page 224*.

To turn the system off or on, press and release this button located on the instrument panel.

The DIC will display the appropriate message as described previously when you press the button.

Traction Control Operation

Traction control limits wheel spin by reducing engine power to the wheels (engine speed management) and by applying brakes to each individual wheel (brake-traction control) as necessary.

The traction control system is enabled automatically when you start your vehicle, and it will activate and flash the ESC/TCS light and display the LOW TRACTION message if it senses that any of the wheels are spinning or beginning to lose traction while driving. For more information on the LOW TRACTION message, see *Driver Information Center (DIC) on page 145*.

Notice: **If you allow the wheel(s) of one axle to spin excessively while the ESC/TCS, ABS and Brake warning lights and the SERVICE ESC and/or SERVICE TRACTION messages are displayed, you could damage the differential. The repairs would not be covered by your warranty. Reduce engine power and do not spin the wheel(s) excessively while these lights and this message are displayed.**

Downloaded from www.Manualslib.com manuals search engine

Notice: **When traction control is turned off, or Competitive Driving Mode is active, it is possible to lose traction. If you attempt to shift with the rear wheels spinning with a loss of traction, it is possible to cause damage to the transmission. Do not attempt to shift when the rear wheels do not have traction. Damage caused by misuse of the vehicle is not covered. See your warranty book for additional information.**

The traction control system may activate on dry or rough roads or under conditions such as heavy acceleration while turning or abrupt upshifts/downshifts of the transmission. When this happens, you may notice a reduction in acceleration, or may hear a noise or vibration. This is normal.

If your vehicle is in cruise control when the system activates, the ESC/TCS light will flash and the cruise control will automatically disengage. When road conditions allow you to use cruise control again, you may re-engage the cruise control. See *Cruise Control on page 115*.

Adding non-GM accessories can affect your vehicle's performance. See *Accessories and Modifications on page 235* for more information.

Limited-Slip Rear Axle

Your vehicle may have a limited-slip rear differential which provides maximum power and performance. It is designed to give you additional traction on snow, mud, ice, sand or gravel. It works like a standard axle most of the time, but when one of the rear wheels has no traction and the other does, this feature will allow the wheel with traction to move the vehicle.

During a sudden shift, such as shifting from FIRST (1) to SECOND (2) gear at low engine speeds or suddenly applying the clutch, you may feel or hear a clunking or rattling noise. This is normal.

Electronic Stability Control

Your vehicle may be equipped with an Electronic Stability Control (ESC) system which combines antilock brake, traction and stability control systems and helps the driver maintain directional control of the vehicle in most driving conditions.

When you first start your vehicle and begin to drive away, the system performs several diagnostic checks to ensure there are no problems. You may hear or feel the system working.

Downloaded from www.Manualslib.com manuals search engine

This is normal and does not mean there is a problem with your vehicle. The system should initialize before the vehicle reaches 20 mph (32 km/h).

If the system fails to turn on or activate, the ESC/TCS light will be on solid, and the ESC OFF or SERVICE ESC message will be displayed.

For more information, see *Driver Information Center (DIC) on page 145* and *Electronic Stability Control (ESC)/Traction Control System (TCS) Indicator/Warning Light (2.0L Engine Only) on page 136*.

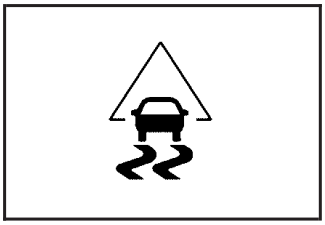

This light will flash on the instrument panel cluster when the ESC system is both on and activated.

You may also feel or hear the system working; this is normal.

When the light is on solid and either the SERVICE ESC or ESC OFF message is displayed, the system will not assist the driver in maintaining directional control of the vehicle. Adjust your driving accordingly. See *DIC Warnings and Messages on page 148*.

See *Electronic Stability Control (ESC)/Traction Control System (TCS) Indicator/Warning Light (2.0L Engine Only) on page 136* for more information.

The Electronic Stability Control (ESC) system is automatically enabled whenever you start your vehicle. To assist the driver with vehicle directional control, especially in slippery road conditions, you should always leave the system on. But, you can turn ESC off if you ever need to.

If the vehicle is in cruise control when the system begins to assist the driver maintain directional control of the vehicle, the ESC/TCS light will flash and the cruise control will automatically disengage. When road conditions allow you to use cruise again, you may re-engage the cruise control. See *Cruise Control on page 115*.

Downloaded from www.Manualslib.com manuals search engine

The ESC/TCS button is located on the instrument panel.

The traction control system can be turned off or back on by pressing the ESC/TCS button. To disable both traction control and ESC, press and hold the button briefly.

When the ESC system is turned off, the TRACTION OFF and ESC OFF messages will appear, and the ESC/TCS light will be on solid to warn the driver that both traction control and ESC are disabled.

It is recommended to leave the system on for normal driving conditions, but it may be necessary to turn the system off if your vehicle is stuck in sand, mud, ice or snow, and you want to "rock" your vehicle to attempt to free it. It may also be necessary to turn off the system when driving in extreme off-road conditions where high wheel spin is required. See *If Your Vehicle is Stuck in Sand, Mud, Ice, or Snow on page 224*. Also, see "Competitive Driving Mode" later in this section.

ESC may also turn off automatically if it determines that a problem exists with the system. The ESC OFF and SERVICE ESC messages and the ESC/TCS light will be on solid to warn the driver that ESC is disabled and requires service. If the problem does not clear after restarting the vehicle, you should see your dealer for service. See *DIC Warnings and Messages on page 148* for more information.

Adding non-GM accessories can affect your vehicle's performance. See *Accessories and Modifications on page 235* for more information.

Competitive Driving Mode

The driver can select this optional handling mode by pressing the ESC/TCS button on the console two times within a five second time period. COMPETITIVE MODE will be displayed in the DIC. See *DIC Warnings and Messages on page 148* for more information. Competitive Driving Mode allows the driver to have full control of the rear wheels while the ESC system helps maintain directional control of the vehicle by selective brake application.

Downloaded from www.Manualslib.com manuals search engine

The ESC/TCS light will be on and the traction control system will not be operating. Adjust your driving accordingly. This electronic stability control mode is recommended only for use during closed track events and competitive driving venues.

When you press the ESC button again, or restart the vehicle, the ESC and TCS will be turned back on.

Notice: **When traction control is turned off, or Competitive Driving Mode is active, it is possible to lose traction. If you attempt to shift with the rear wheels spinning with a loss of traction, it is possible to cause damage to the transmission. Do not attempt to shift when the rear wheels do not have traction. Damage caused by misuse of the vehicle is not covered. See your warranty book for additional information.**

Steering

Power Steering

If you lose power steering assist because the engine stops or the system is not functioning, you can steer but it will take much more effort.

Steering Tips

It is important to take curves at a reasonable speed.

A lot of the “driver lost control” accidents mentioned on the news happen on curves.

Here is why:

Experienced driver or beginner, each of us is subject to the same laws of physics when driving on curves. The traction of the tires against the road surface makes it possible for the vehicle to change its path when you turn the front wheels. If there is no traction, inertia will keep the vehicle going in the same direction. If you have ever tried to steer a vehicle on wet ice, you will understand this.

Downloaded from www.Manualslib.com manuals search engine

The traction you can get in a curve depends on the condition of your tires and the road surface, the angle at which the curve is banked, and your speed. While you are in a curve, speed is the one factor you can control.

Suppose you are steering through a sharp curve. Then you suddenly apply the brakes. Both control systems — steering and braking — have to do their work where the tires meet the road. Unless you have four-wheel anti-lock brakes, adding the hard braking can demand too much of those places. You can lose control.

The same thing can happen if you are steering through a sharp curve and you suddenly accelerate. Those two control systems — steering and acceleration — can overwhelm those places where the tires meet the road and make you lose control. See *Traction Control System (TCS) on page 198* and *Electronic Stability Control on page 200*.

What should you do if this ever happens? Ease up on the brake or accelerator pedal, steer the vehicle the way you want it to go, and slow down.

Speed limit signs near curves warn that you should adjust your speed. Of course, the posted speeds are based on good weather and road conditions. Under less favorable conditions you will want to go slower.

If you need to reduce your speed as you approach a curve, do it before you enter the curve, while your front wheels are straight ahead.

Try to adjust your speed so you can “drive” through the curve. Maintain a reasonable, steady speed. Wait to accelerate until you are out of the curve, and then accelerate gently into the straightaway.

Adding non-GM accessories can affect your vehicle’s performance. See *Accessories and Modifications on page 235*.

Downloaded from www.Manualslib.com manuals search engine

Steering in Emergencies

There are times when steering can be more effective than braking. For example, you come over a hill and find a truck stopped in your lane, or a car suddenly pulls out from nowhere, or a child darts out from between parked cars and stops right in front of you. You can avoid these problems by braking — if you can stop in time. But sometimes you cannot; there is not room. That is the time for evasive action — steering around the problem.

Your vehicle can perform very well in emergencies like these. First apply your brakes — but, unless you have anti-lock brakes, not enough to lock your wheels.

See *Braking on page 194*. It is better to remove as much speed as you can from a possible collision. Then steer around the problem, to the left or right depending on the space available.

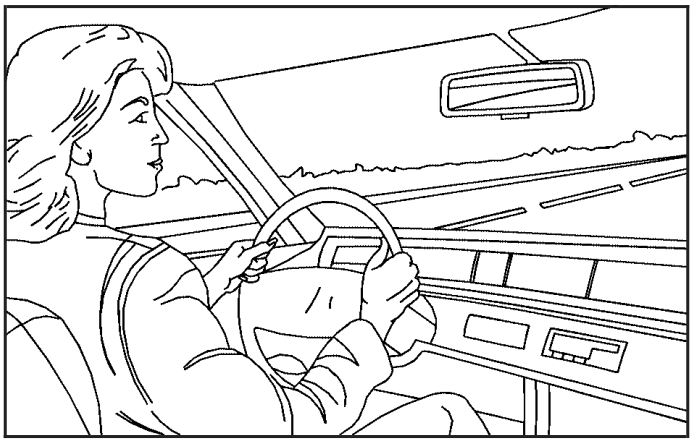

An emergency like this requires close attention and a quick decision. If you are holding the steering wheel at the recommended 9 and 3 o'clock positions, you can turn it a full 180 degrees very quickly without removing either hand. But you have to act fast, steer quickly, and just as quickly straighten the wheel once you have avoided the object.

The fact that such emergency situations are always possible is a good reason to practice defensive driving at all times and wear safety belts properly.

Downloaded from www.Manualslib.com manuals search engine

Off-Road Recovery

You may find that your right wheels have dropped off the edge of a road onto the shoulder while you are driving.

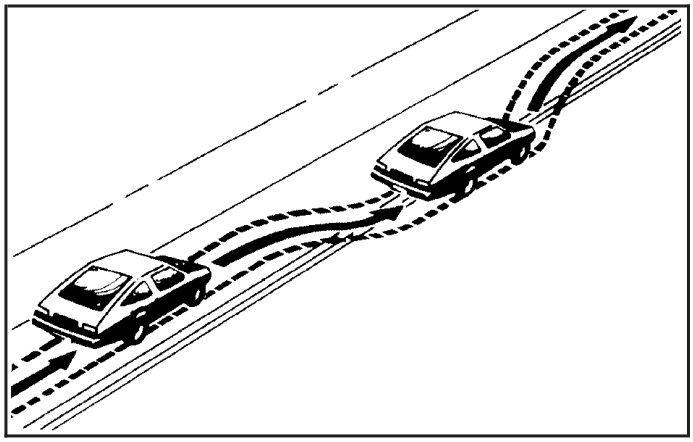

If the level of the shoulder is only slightly below the pavement, recovery should be fairly easy. Ease off the accelerator and then, if there is nothing in the way, steer so that your vehicle straddles the edge of the pavement. You can turn the steering wheel up to one-quarter turn until the right front tire contacts the pavement edge. Then turn your steering wheel to go straight down the roadway.

Passing

The driver of a vehicle about to pass another on a two-lane highway waits for just the right moment, accelerates, moves around the vehicle ahead, then goes back into the right lane again. A simple maneuver?

Not necessarily! Passing another vehicle on a two-lane highway is a potentially dangerous move, since the passing vehicle occupies the same lane as oncoming traffic for several seconds. A miscalculation, an error in judgment, or a brief surrender to frustration or anger can suddenly put the passing driver face to face with the worst of all traffic accidents — the head-on collision.

So here are some tips for passing:

- Drive ahead. Look down the road, to the sides, and to crossroads for situations that might affect your passing patterns. If you have any doubt whatsoever about making a successful pass, wait for a better time.

Downloaded from www.Manualslib.com manuals search engine

- Watch for traffic signs, pavement markings, and lines. If you can see a sign up ahead that might indicate a turn or an intersection, delay your pass. A broken center line usually indicates it is all right to pass, providing the road ahead is clear. Never cross a solid line on your side of the lane or a double solid line, even if the road seems empty of approaching traffic.
- Do not get too close to the vehicle you want to pass while you are awaiting an opportunity. For one thing, following too closely reduces your area of vision, especially if you are following a larger vehicle. Also, you will not have adequate space if the vehicle ahead suddenly slows or stops. Keep back a reasonable distance.
- When it looks like a chance to pass is coming up, start to accelerate but stay in the right lane and do not get too close. Time your move so you will be increasing speed as the time comes to move into the other lane.

  If the way is clear to pass, you will have a running start that more than makes up for the distance you would lose by dropping back. And if something happens to cause you to cancel your pass, you need only slow down and drop back again and wait for another opportunity.
- If other vehicles are lined up to pass a slow vehicle, wait your turn. But take care that someone is not trying to pass you as you pull out to pass the slow vehicle. Remember to glance over your shoulder and check the blind spot.
- Check your vehicle's mirrors, glance over your shoulder, and start your left lane change signal before moving out of the right lane to pass. When you are far enough ahead of the passed vehicle to see its front in your vehicle's inside mirror, activate the right lane change signal and move back into the right lane. Remember that your vehicle's passenger side outside mirror is convex. The vehicle you just passed may seem to be farther away from you than it really is.

Downloaded from www.Manualslib.com manuals search engine

- Try not to pass more than one vehicle at a time on two-lane roads. Reconsider before passing the next vehicle.
- Do not overtake a slowly moving vehicle too rapidly. Even though the brake lamps are not flashing, it may be slowing down or starting to turn.
- If you are being passed, make it easy for the following driver to get ahead of you. Perhaps you can ease a little to the right.

Loss of Control

Let us review what driving experts say about what happens when the three control systems — brakes, steering, and acceleration — do not have enough friction where the tires meet the road to do what the driver has asked.

In any emergency, do not give up. Keep trying to steer and constantly seek an escape route or area of less danger.

Skidding

In a skid, a driver can lose control of the vehicle. Defensive drivers avoid most skids by taking reasonable care suited to existing conditions, and by not overdriving those conditions. But skids are always possible.

The three types of skids correspond to your vehicle's three control systems. In the braking skid, your wheels are not rolling. In the steering or cornering skid, too much speed or steering in a curve causes tires to slip and lose cornering force. And in the acceleration skid, too much throttle causes the driving wheels to spin.

A cornering skid and an acceleration skid are best handled by easing your foot off the accelerator pedal.

If your vehicle starts to slide, ease your foot off the accelerator pedal and quickly steer the way you want the vehicle to go. If you start steering quickly enough, your vehicle may straighten out. Always be ready for a second skid if it occurs.

Downloaded from www.Manualslib.com manuals search engine

Of course, traction is reduced when water, snow, ice, gravel, or other material is on the road. For safety, you will want to slow down and adjust your driving to these conditions. It is important to slow down on slippery surfaces because stopping distance will be longer and vehicle control more limited.

While driving on a surface with reduced traction, try your best to avoid sudden steering, acceleration, or braking, including reducing vehicle speed by shifting to a lower gear. Any sudden changes could cause the tires to slide. You may not realize the surface is slippery until your vehicle is skidding. Learn to recognize warning clues — such as enough water, ice, or packed snow on the road to make a mirrored surface — and slow down when you have any doubt.

If you have the Anti-Lock Brake System (ABS), remember: It helps avoid only the braking skid. If you do not have ABS, then in a braking skid, where the wheels are no longer rolling, release enough pressure on the brakes to get the wheels rolling again. This restores steering control. Push the brake pedal down steadily when you have to stop suddenly. As long as the wheels are rolling, you will have steering control.

Driving at Night

Night driving is more dangerous than day driving. One reason is that some drivers are likely to be impaired — by alcohol or drugs, with night vision problems, or by fatigue.

Here are some tips on night driving.

- Drive defensively.
- Do not drink and drive.
- Adjust the inside rearview mirror to reduce the glare from headlamps behind you.
- Since you cannot see as well, you may need to slow down and keep more space between you and other vehicles.
- Slow down, especially on higher speed roads. Your vehicle's headlamps can light up only so much road ahead.
- In remote areas, watch for animals.
- If you are tired, pull off the road in a safe place and rest.

Downloaded from www.Manualslib.com manuals search engine

No one can see as well at night as in the daytime. But as we get older these differences increase. A 50-year-old driver may require at least twice as much light to see the same thing at night as a 20-year-old.

What you do in the daytime can also affect your night vision. For example, if you spend the day in bright sunshine you are wise to wear sunglasses. Your eyes will have less trouble adjusting to night. But if you are driving, do not wear sunglasses at night. They may cut down on glare from headlamps, but they also make a lot of things invisible.

You can be temporarily blinded by approaching headlamps. It can take a second or two, or even several seconds, for your eyes to re-adjust to the dark. When you are faced with severe glare, as from a driver who does not lower the high beams, or a vehicle with misaimed headlamps, slow down a little. Avoid staring directly into the approaching headlamps.

Keep the windshield and all the glass on your vehicle clean — inside and out. Glare at night is made much worse by dirt on the glass. Even the inside of the glass can build up a film caused by dust. Dirty glass makes lights dazzle and flash more than clean glass would, making the pupils of your eyes contract repeatedly.

Remember that the headlamps light up far less of a roadway when you are in a turn or curve. Keep your eyes moving; that way, it is easier to pick out dimly lighted objects. Just as the headlamps should be checked regularly for proper aim, so should your eyes be examined regularly. Some drivers suffer from night blindness — the inability to see in dim light — and are not even aware of it.

Downloaded from www.Manualslib.com manuals search engine

Driving in Rain and on Wet Roads

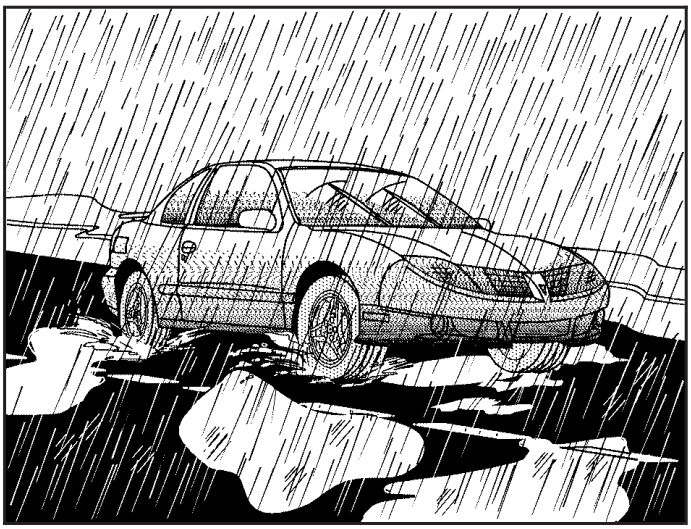

Rain and wet roads can mean driving trouble. On a wet road, you cannot stop, accelerate, or turn as well because your tire-to-road traction is not as good as on dry roads. And, if your tires do not have much tread left, you will get even less traction. It is always wise to go slower and be cautious if rain starts to fall while you are driving. The surface may get wet suddenly when your reflexes are tuned for driving on dry pavement.

The heavier the rain, the harder it is to see. Even if your windshield wiper blades are in good shape, a heavy rain can make it harder to see road signs and traffic signals, pavement markings, the edge of the road, and even people walking.

It is wise to keep your windshield wiping equipment in good shape and keep your windshield washer fluid reservoir filled with washer fluid. Replace your windshield wiper inserts when they show signs of streaking or missing areas on the windshield, or when strips of rubber start to separate from the inserts.

Downloaded from www.Manualslib.com manuals search engine

⚠ CAUTION:

Wet brakes can cause accidents. They may not work as well in a quick stop and may cause pulling to one side. You could lose control of the vehicle.

After driving through a large puddle of water or a car wash, apply your brake pedal lightly until your brakes work normally.

Driving too fast through large water puddles or even going through some car washes can cause problems, too. The water may affect your brakes. Try to avoid puddles. But if you cannot, try to slow down before you hit them.

Hydroplaning

Hydroplaning is dangerous. So much water can build up under your tires that they can actually ride on the water. This can happen if the road is wet enough and you are going fast enough. When your vehicle is hydroplaning, it has little or no contact with the road.

Hydroplaning does not happen often. But it can if your tires do not have much tread or if the pressure in one or more is low. It can happen if a lot of water is standing on the road. If you can see reflections from trees, telephone poles, or other vehicles, and raindrops dimple the water's surface, there could be hydroplaning.

Hydroplaning usually happens at higher speeds. There just is not a hard and fast rule about hydroplaning. The best advice is to slow down when it is raining.

Driving Through Deep Standing Water

Notice: **If you drive too quickly through deep puddles or standing water, water can come in through your engine's air intake and badly damage your engine. Never drive through water that is slightly lower than the underbody of your vehicle. If you cannot avoid deep puddles or standing water, drive through them very slowly.**

Downloaded from www.Manualslib.com manuals search engine

Driving Through Flowing Water

⚠ CAUTION:

Flowing or rushing water creates strong forces. If you try to drive through flowing water, as you might at a low water crossing, your vehicle can be carried away. As little as six inches of flowing water can carry away a smaller vehicle. If this happens, you and other vehicle occupants could drown. Do not ignore police warning signs, and otherwise be very cautious about trying to drive through flowing water.

Some Other Rainy Weather Tips

- Besides slowing down, allow some extra following distance. And be especially careful when you pass another vehicle. Allow yourself more clear room ahead, and be prepared to have your view restricted by road spray.
- Have good tires with proper tread depth. See *Tires on page 284*.

Downloaded from www.Manualslib.com manuals search engine

City Driving

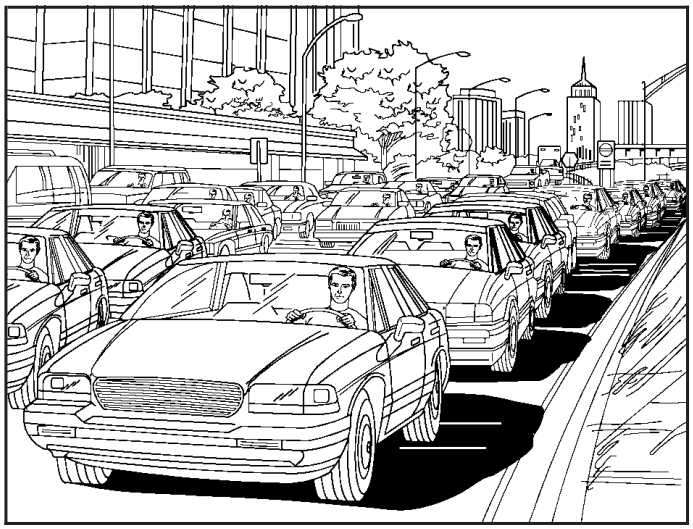

One of the biggest problems with city streets is the amount of traffic on them. You will want to watch out for what the other drivers are doing and pay attention to traffic signals.

Here are ways to increase your safety in city driving:

- Know the best way to get to where you are going. Get a city map and plan your trip into an unknown part of the city just as you would for a cross-country trip.
- Try to use the freeways that rim and crisscross most large cities. You will save time and energy. See *Freeway Driving on page 215*.
- Treat a green light as a warning signal. A traffic light is there because the corner is busy enough to need it. When a light turns green, and just before you start to move, check both ways for vehicles that have not cleared the intersection or may be running the red light.

Downloaded from www.Manualslib.com manuals search engine

Freeway Driving

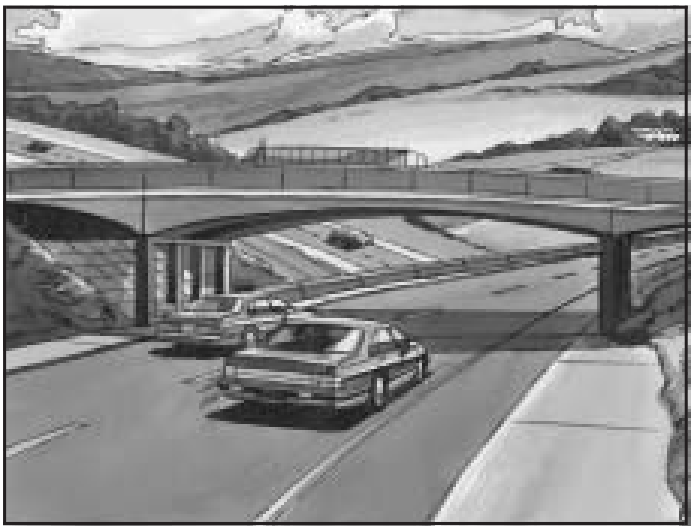

Mile for mile, freeways — also called thruways, parkways, expressways, turnpikes, or superhighways — are the safest of all roads. But they have their own special rules.

The most important advice on freeway driving is: Keep up with traffic and keep to the right. Drive at the same speed most of the other drivers are driving. Too-fast or too-slow driving breaks a smooth traffic flow. Treat the left lane on a freeway as a passing lane.

At the entrance, there is usually a ramp that leads to the freeway. If you have a clear view of the freeway as you drive along the entrance ramp, you should begin to check traffic. Try to determine where you expect to blend with the flow. Try to merge into the gap at close to the prevailing speed. Switch on your turn signal, check your mirrors, and glance over your shoulder as often as necessary. Try to blend smoothly with the traffic flow.

Once you are on the freeway, adjust your speed to the posted limit or to the prevailing rate if it is slower. Stay in the right lane unless you want to pass.

Before changing lanes, check your mirrors. Then use your turn signal.

Just before you leave the lane, glance quickly over your shoulder to make sure there is not another vehicle in your blind spot.

Downloaded from www.Manualslib.com manuals search engine

Once you are moving on the freeway, make certain you allow a reasonable following distance.

Expect to move slightly slower at night.

When you want to leave the freeway, move to the proper lane well in advance. If you miss your exit, do not, under any circumstances, stop and back up. Drive on to the next exit.

The exit ramp can be curved, sometimes quite sharply. The exit speed is usually posted. Reduce your speed according to your speedometer, not to your sense of motion. After driving for any distance at higher speeds, you may tend to think you are going slower than you actually are.

Before Leaving on a Long Trip

Make sure you are ready. Try to be well rested. If you must start when you are not fresh — such as after a day's work — do not plan to make too many miles that first part of the journey. Wear comfortable clothing and shoes you can easily drive in.

Is your vehicle ready for a long trip? If you keep it serviced and maintained, it is ready to go. If it needs service, have it done before starting out. Of course, you will find experienced and able service experts in GM dealerships all across North America. They will be ready and willing to help if you need it.

Here are some things you can check before a trip:

- *Windshield Washer Fluid:* Is the reservoir full? Are all windows clean inside and outside?
- *Wiper Blades:* Are they in good shape?
- *Fuel, Engine Oil, Other Fluids:* Have you checked all levels?
- *Lamps:* Are they all working? Are the lenses clean?

Downloaded from www.Manualslib.com manuals search engine

- *Tires:* They are vitally important to a safe, trouble-free trip. Is the tread good enough for long-distance driving? Are the tires all inflated to the recommended pressure?
- *Weather Forecasts:* What is the weather outlook along your route? Should you delay your trip a short time to avoid a major storm system?
- *Maps:* Do you have up-to-date maps?

Highway Hypnosis

Is there actually such a condition as highway hypnosis? Or is it just plain falling asleep at the wheel? Call it highway hypnosis, lack of awareness, or whatever.

There is something about an easy stretch of road with the same scenery, along with the hum of the tires on the road, the drone of the engine, and the rush of the wind against the vehicle that can make you sleepy. Do not let it happen to you! If it does, your vehicle can leave the road in less than a second, and you could crash and be injured.

What can you do about highway hypnosis? First, be aware that it can happen.

Then here are some tips:

- Make sure your vehicle is well ventilated, with a comfortably cool interior.
- Keep your eyes moving. Scan the road ahead and to the sides. Check your rearview mirrors and your instruments frequently.
- If you get sleepy, pull off the road into a rest, service, or parking area and take a nap, get some exercise, or both. For safety, treat drowsiness on the highway as an emergency.

Downloaded from www.Manualslib.com manuals search engine

Hill and Mountain Roads

Driving on steep hills or mountains is different from driving in flat or rolling terrain.

If you drive regularly in steep country, or if you are planning to visit there, here are some tips that can make your trips safer and more enjoyable.

- Keep your vehicle in good shape. Check all fluid levels and also the brakes, tires, cooling system, and transmission. These parts can work hard on mountain roads.

⚠ CAUTION:

If you do not shift down, your brakes could get so hot that they would not work well. You would then have poor braking or even none going down a hill. You could crash. Shift down to let your engine assist your brakes on a steep downhill slope.

Downloaded from www.Manualslib.com manuals search engine

⚠ CAUTION:

Coasting downhill in NEUTRAL (N) or with the ignition off is dangerous. Your brakes will have to do all the work of slowing down. They could get so hot that they would not work well. You would then have poor braking or even none going down a hill. You could crash. Always have your engine running and your vehicle in gear when you go downhill.

- Know how to go down hills. The most important thing to know is this: let your engine do some of the slowing down. Shift to a lower gear when you go down a steep or long hill.
- Know how to go uphill. You may want to shift down to a lower gear. The lower gears help cool your engine and transmission, and you can climb the hill better.
- Stay in your own lane when driving on two-lane roads in hills or mountains. Do not swing wide or cut across the center of the road. Drive at speeds that let you stay in your own lane.
- As you go over the top of a hill, be alert. There could be something in your lane, like a stalled car or an accident.
- You may see highway signs on mountains that warn of special problems. Examples are long grades, passing or no-passing zones, a falling rocks area, or winding roads. Be alert to these and take appropriate action.

Downloaded from www.Manualslib.com manuals search engine

Winter Driving

Here are some tips for winter driving:

- Have your vehicle in good shape for winter.
- You may want to put winter emergency supplies in your trunk.

Also see *Tires on page 284*.

Include an ice scraper, a small brush or broom, a supply of windshield washer fluid, a rag, some winter outer clothing, a small shovel, a flashlight, a red cloth, and a couple of reflective warning triangles. And, if you will be driving under severe conditions, include a small bag of sand, a piece of old carpet, or a couple of burlap bags to help provide traction. Be sure you properly secure these items in your vehicle.

Downloaded from www.Manualslib.com manuals search engine

Driving on Snow or Ice

Most of the time, those places where the tires meet the road probably have good traction.

However, if there is snow or ice between the tires and the road, you can have a very slippery situation. You will have a lot less traction, or grip, and will need to be very careful.

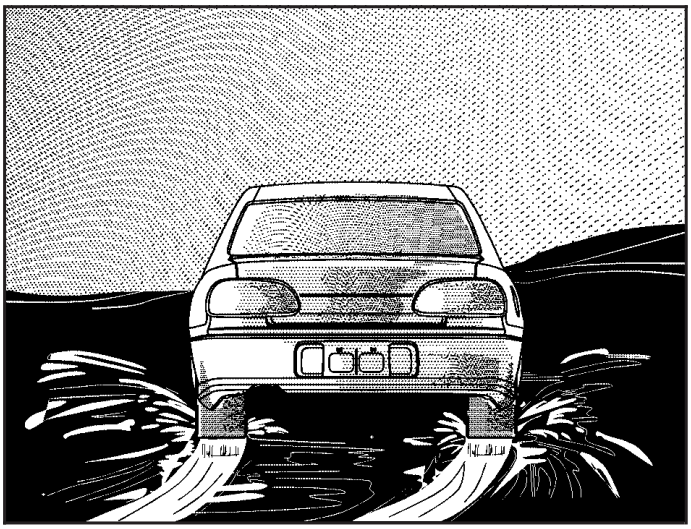

What is the worst time for this? Wet ice. Very cold snow or ice can be slick and hard to drive on. But wet ice can be even more trouble because it may offer the least traction of all. You can get wet ice when it is about freezing, 32°F (0°C), and freezing rain begins to fall. Try to avoid driving on wet ice until salt and sand crews can get there.

The Traction Control System (TCS) improves your ability to accelerate when driving on a slippery road. But you can turn the TCS off if you ever need to. You should turn the system off if your vehicle ever gets stuck in sand, mud, ice, or snow. See *If Your Vehicle is Stuck in Sand, Mud, Ice, or Snow on page 224*. Even though your vehicle has the Traction Control System (TCS), you will want to slow down and adjust your driving to the road conditions. Under certain conditions, you may want to turn the TCS off, such as when driving through deep snow and loose gravel, to help maintain vehicle motion at lower speeds. See *Traction Control System (TCS) on page 198* and *Electronic Stability Control on page 200*.

Downloaded from www.Manualslib.com manuals search engine

Accelerate gently. Try not to break the fragile traction. If you accelerate too fast, the drive wheels will spin and polish the surface under the tires even more.

Unless you have the Anti-Lock Brake System (ABS), you will want to brake very gently, too. If you do have ABS, see *Anti-Lock Brake System (ABS) on page 195*. This system improves your vehicle's stability when you make a hard stop on a slippery road. Whether you have ABS or not, you will want to begin stopping sooner than you would on dry pavement. Without ABS, if you feel your vehicle begin to slide, let up on the brakes a little. Push the brake pedal down steadily to get the most traction you can.

Remember, unless you have ABS, if you brake so hard that your wheels stop rolling, you will just slide. Brake so your wheels always keep rolling and you can still steer.

- Whatever your braking system, allow greater following distance on any slippery road.
- Watch for slippery spots. The road might be fine until you hit a spot that is covered with ice. On an otherwise clear road, ice patches may appear in shaded areas where the sun cannot reach, such as around clumps of trees, behind buildings, or under bridges. Sometimes the surface of a curve or an overpass may remain icy when the surrounding roads are clear. If you see a patch of ice ahead of you, brake before you are on it. Try not to brake while you are actually on the ice, and avoid sudden steering maneuvers.

If You Are Caught in a Blizzard

If you are stopped by heavy snow, you could be in a serious situation. You should probably stay with your vehicle unless you know for sure that you are near help and you can hike through the snow. Here are some things to do to summon help and keep yourself and your passengers safe:

- Turn on your hazard flashers.
- Tie a red cloth to your vehicle to alert police that you have been stopped by the snow.

Downloaded from www.Manualslib.com manuals search engine

- Put on extra clothing or wrap a blanket around you. If you do not have blankets or extra clothing, make body insulators from newspapers, burlap bags, rags, floor mats — anything you can wrap around yourself or tuck under your clothing to keep warm.

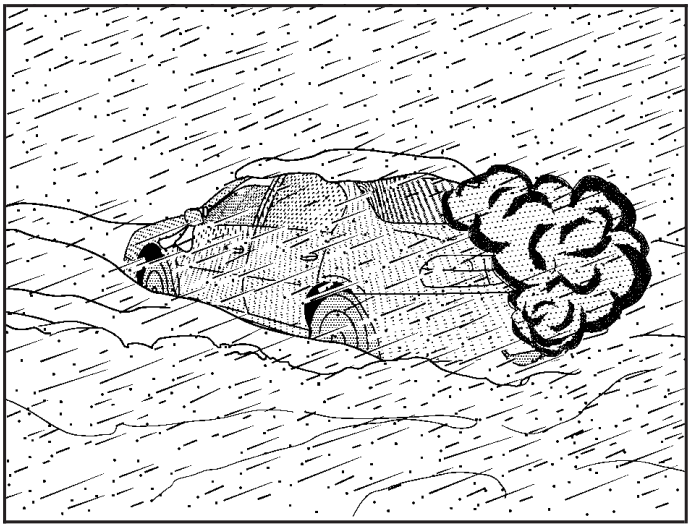

You can run the engine to keep warm, but be careful.

⚠ CAUTION:

Snow can trap exhaust gases under your vehicle. This can cause deadly CO (carbon monoxide) gas to get inside. CO could overcome you and kill you. You cannot see it or smell it, so you might not know it is in your vehicle. Clear away snow from around the base of your vehicle, especially any that is blocking your exhaust pipe. And check around again from time to time to be sure snow does not collect there.

Open a window just a little on the side of the vehicle that is away from the wind. This will help keep CO out.

Downloaded from www.Manualslib.com manuals search engine

Run your engine only as long as you must. This saves fuel. When you run the engine, make it go a little faster than just idle. That is, push the accelerator slightly. This uses less fuel for the heat that you get and it keeps the battery charged. You will need a well-charged battery to restart the vehicle, and possibly for signaling later on with your headlamps. Let the heater run for a while.

Then, shut the engine off and close the window almost all the way to preserve the heat. Start the engine again and repeat this only when you feel really uncomfortable from the cold. But do it as little as possible. Preserve the fuel as long as you can. To help keep warm, you can get out of the vehicle and do some fairly vigorous exercises every half hour or so until help comes.

If Your Vehicle is Stuck in Sand, Mud, Ice, or Snow

In order to free your vehicle when it is stuck, you will need to spin the wheels, but you do not want to spin your wheels too fast. The method known as rocking can help you get out when you are stuck, but you must use caution.

Downloaded from www.Manualslib.com manuals search engine

⚠ CAUTION:

If you let your vehicle's tires spin at high speed, they can explode, and you or others could be injured. And, the transmission or other parts of the vehicle can overheat. That could cause an engine compartment fire or other damage. When you are stuck, spin the wheels as little as possible. Do not spin the wheels above 35 mph (55 km/h) as shown on the speedometer.

Notice: **Spinning the wheels can destroy parts of your vehicle as well as the tires. If you spin the wheels too fast while shifting the transmission back and forth, you can destroy the transmission.**

For information about using tire chains on your vehicle, see *Tire Chains on page 302*.

Rocking Your Vehicle to Get It Out

First, turn the steering wheel left and right. That will clear the area around the front wheels. If your vehicle has traction control, you should turn the traction control system off. See *Traction Control System (TCS) on page 198* and *Electronic Stability Control on page 200*. Then shift back and forth between REVERSE (R) and a forward gear, or with a manual transmission between FIRST (1) or SECOND (2) and REVERSE (R), spinning the wheels as little as possible. To prevent transmission wear, allow the wheels to stop spinning before shifting gears. Release the accelerator pedal while you shift, and press lightly on the accelerator pedal when the transmission is in gear.

Downloaded from www.Manualslib.com manuals search engine

By slowly spinning the wheels in the forward and reverse directions, you will cause a rocking motion that may free your vehicle. If that does not get your vehicle out after a few tries, it may need to be towed out. If your vehicle does need to be towed out, see *Towing Your Vehicle on page 231*.

Loading Your Vehicle

It is very important to know how much weight your vehicle can carry. This weight is called the vehicle capacity weight and includes the weight of all occupants, cargo, and all nonfactory-installed options. Two labels on your vehicle show how much weight it may properly carry, the Tire and Loading Information label and the Certification label.

⚠ CAUTION:

Do not load your vehicle any heavier than the Gross Vehicle Weight Rating (GVWR), or either the maximum front or rear Gross Axle Weight Rating (GAWR). If you do, parts on your vehicle can break, and it can change the way your vehicle handles. These could cause you to lose control and crash. Also, overloading can shorten the life of your vehicle.

Downloaded from www.Manualslib.com manuals search engine

Tire and Loading Information Label

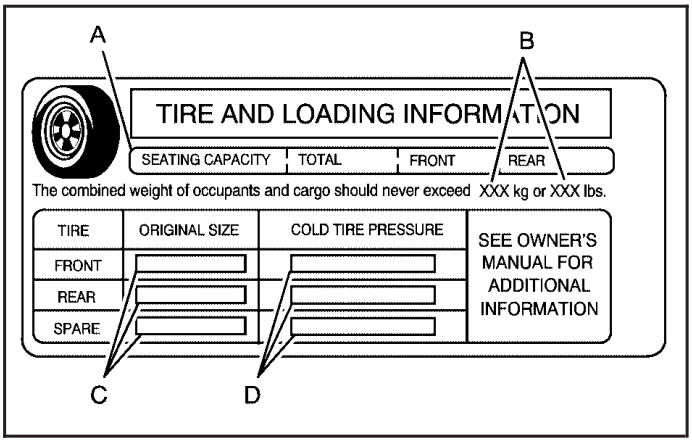

Label Example

A vehicle specific Tire and Loading Information label is attached to the center pillar (B-pillar) of your vehicle. With the driver's door open, you will find the label attached below the door latch. This label shows the number of occupant seating positions (A), and the maximum vehicle capacity weight (B) in kilograms and pounds.

The Tire and Loading Information label also shows the size of the original equipment tires (C) and the recommended cold tire inflation pressures (D). For more information on tires and inflation see *Tires on page 284* and *Inflation - Tire Pressure on page 292*.

There is also important loading information on the vehicle Certification label. It tells you the Gross Vehicle Weight Rating (GVWR) and the Gross Axle Weight Rating (GAWR) for the front and rear axle. See "Certification Label" later in this section.

Steps for Determining Correct Load Limit

1. Locate the statement "The combined weight of occupants and cargo should never exceed XXX kg or XXX lbs" on your vehicle's placard.
2. Determine the combined weight of the driver and passengers that will be riding in your vehicle.
3. Subtract the combined weight of the driver and passengers from XXX kg or XXX lbs.

Downloaded from www.Manualslib.com manuals search engine

4. The resulting figure equals the available amount of cargo and luggage load capacity. For example, if the “XXX” amount equals 1400 lbs and there will be five 150 lb passengers in your vehicle, the amount of available cargo and luggage load capacity is 650 lbs (1400 – 750 (5 x 150) = 650 lbs).
5. Determine the combined weight of luggage and cargo being loaded on the vehicle. That weight may not safely exceed the available cargo and luggage load capacity calculated in Step 4.
6. If your vehicle will be towing a trailer, the load from your trailer will be transferred to your vehicle. Consult this manual to determine how this reduces the available cargo and luggage load capacity of your vehicle.

   Your vehicle is neither designed nor intended to tow a trailer.

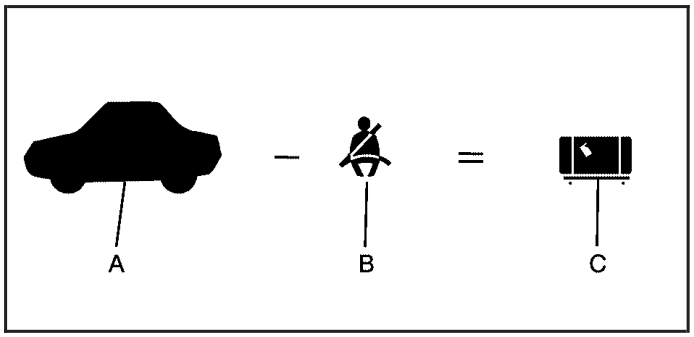

Example 1

Item	Description	Total
A	Vehicle Capacity Weight for Example 1 =	400 lbs (181 kg)
B	Subtract Occupant Weight @ 150 lbs (68 kg) x 1 =	150 lbs (68 kg)
C	Available Occupant and Cargo Weight =	250 lbs (113 kg)

Downloaded from www.Manualslib.com manuals search engine

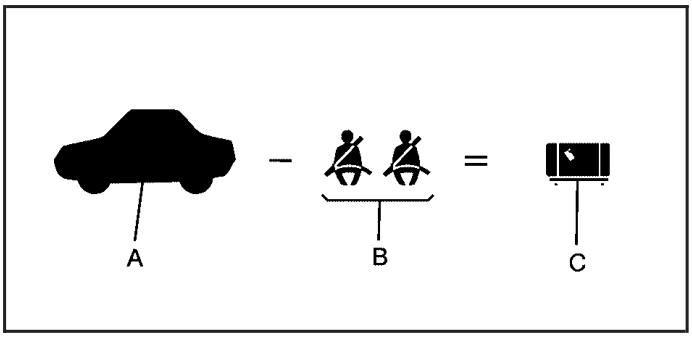

Example 2

Item	Description	Total
A	Vehicle Capacity Weight for Example 2 =	400 lbs (181 kg)
B	Subtract Occupant Weight @ 150 lbs (68 kg) x 2 =	300 lbs (136 kg)
C	Available Cargo Weight =	100 lbs (45 kg)

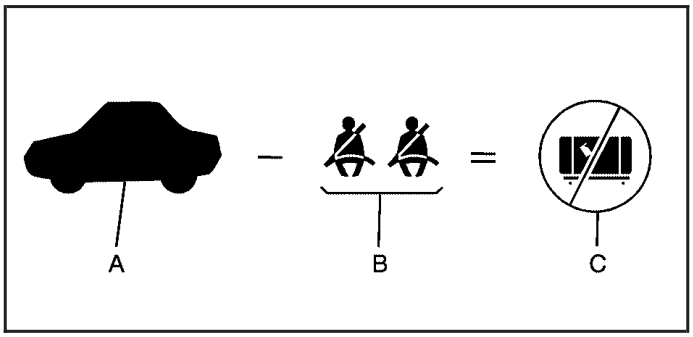

Example 3

Item	Description	Total
A	Vehicle Capacity Weight for Example 3 =	400 lbs (181 kg)
B	Subtract Occupant Weight @ 200 lbs (91 kg) x 2 =	400 lbs (181 kg)
C	Available Cargo Weight =	0 lbs (0 kg)

Refer to your vehicle's Tire and Loading Information label for specific information about your vehicle's capacity weight and seating positions. The combined weight of the driver, passengers, and cargo should never exceed your vehicle's capacity weight.

Downloaded from www.Manualslib.com manuals search engine

Certification Label

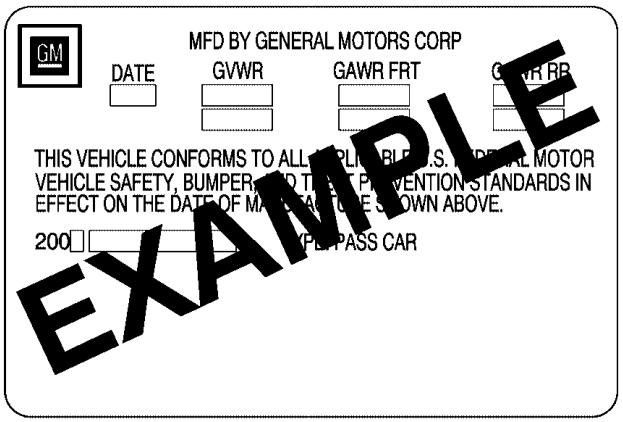

A vehicle specific Certification label is attached to the rear edge of the driver's door. It tells you the gross weight capacity of your vehicle, called the Gross Vehicle Weight Rating (GVWR). The GVWR includes the weight of the vehicle, all occupants, fuel and cargo. Never exceed the GVWR for your vehicle, or the Gross Axle Weight Rating (GAWR) for either the front or rear axle.

⚠ CAUTION:

Do not load your vehicle any heavier than the Gross Vehicle Weight Rating (GVWR), or either the maximum front or rear Gross Axle Weight Rating (GAWR). If you do, parts on your vehicle can break, and it can change the way your vehicle handles. These could cause you to lose control and crash. Also, overloading can shorten the life of your vehicle.

Notice: **Overloading your vehicle may cause damage. Repairs would not be covered by your warranty. Do not overload your vehicle.**

Downloaded from www.Manualslib.com manuals search engine

If you put things inside your vehicle — like suitcases, tools, packages, or anything else — they will go as fast as the vehicle goes. If you have to stop or turn quickly, or if there is a crash, they will keep going.

⚠ CAUTION:

Things you put inside your vehicle can strike and injure people in a sudden stop or turn, or in a crash.

- **Put things in the rear area of your vehicle. Try to spread the weight evenly.**
- **Never stack heavier things, like suitcases, inside the vehicle so that some of them are above the tops of the seats.**
- **Do not leave an unsecured child restraint in your vehicle.**
- **When you carry something inside the vehicle, secure it whenever you can.**

Towing

Towing Your Vehicle

Consult your dealer or a professional towing service if you need to have your disabled vehicle towed. See *Roadside Assistance Program on page 368*.

Recreational Vehicle Towing

Notice: **Dolly towing or dinghy towing your vehicle may cause damage because of reduced ground clearance. Always put your vehicle on a flatbed truck.**

Your vehicle was neither designed nor intended to be towed with any of its wheels on the ground. If your vehicle must be towed, see “Towing Your Vehicle” earlier in this section.

Towing a Trailer

Your vehicle is neither designed nor intended to tow a trailer.

Downloaded from www.Manualslib.com manuals search engine

NOTES

Downloaded from www.Manualslib.com manuals search engine

Section 5 Service and Appearance Care

Service 235
Accessories and Modifications 235
California Proposition 65 Warning 236
Doing Your Own Service Work 236
Adding Equipment to the Outside of Your Vehicle 237

Fuel 237
Gasoline Octane 237
Gasoline Specifications 237
California Fuel 238
Additives 238
Fuels in Foreign Countries 239
Filling the Tank 240
Filling a Portable Fuel Container 242

Checking Things Under the Hood 242
Hood Release 243
Engine Compartment Overview 244
Engine Oil 247
Engine Oil Life System 252
Engine Air Cleaner/Filter 254
Automatic Transmission Fluid 256
Manual Transmission Fluid 256
Hydraulic Clutch 256
Engine Coolant 257
Coolant Surge Tank Pressure Cap 260
Engine Overheating 260
Cooling System 262
Power Steering Fluid 268
Windshield Washer Fluid 269
Brakes 270
Battery 273
Jump Starting 274

Rear Axle 279

Bulb Replacement 280
Halogen Bulbs 280
Headlamps 280
Front Turn Signal, Parking and Fog Lamps 281
Taillamps, Turn Signal, and Stoplamps 281
Back-Up Lamps 282
License Plate Lamp 282
Replacement Bulbs 283

Windshield Wiper Blade Replacement 283

Tires 284
Winter Tires 285
Tire Sidewall Labeling 286
Tire Terminology and Definitions 289

Downloaded from www.Manualslib.com manuals search engine

Section 5 Service and Appearance Care

Inflation - Tire Pressure 292
Tire Inspection and Rotation 293
When It Is Time for New Tires 295
Buying New Tires 296
Different Size Tires and Wheels 297
Uniform Tire Quality Grading 298
Wheel Alignment and Tire Balance 299
Wheel Replacement 299
Tire Chains 302
If a Tire Goes Flat 302
Tire Inflator Kit 303

Appearance Care 314
Cleaning the Inside of Your Vehicle 314
Fabric/Carpet 315
Leather 316
Instrument Panel, Vinyl, and Other Plastic Surfaces 317
Care of Safety Belts 317
Weatherstrips 317
Washing Your Vehicle 318
Cleaning Exterior Lamps/Lenses 318
Finish Care 319
Windshield and Wiper Blades 320
Convertible Top 320
Aluminum or Chrome-Plated Wheels 321
Tires 322
Sheet Metal Damage 322
Finish Damage 322
Underbody Maintenance 323
Chemical Paint Spotting 323
Vehicle Care/Appearance Materials 324

Vehicle Identification 325
Vehicle Identification Number (VIN) 325
Service Parts Identification Label 325

Electrical System 326
Add-On Electrical Equipment 326
Headlamp Wiring 326
Power Windows and Other Power Options 326
Fuses and Circuit Breakers 326
Floor Console Fuse Block 327
Underhood Fuse Block 329

Capacities and Specifications 332

Downloaded from www.Manualslib.com manuals search engine

Service

Your dealer knows your vehicle best and wants you to be happy with it. We hope you will go to your dealer for all your service needs. You will get genuine GM parts and GM-trained and supported service people.

We hope you will want to keep your GM vehicle all GM. Genuine GM parts have one of these marks:

ACDelco®

GM Parts®

GM® Goodwrench

GM® Accessories

Accessories and Modifications

When you add non-GM accessories to your vehicle they can affect your vehicle's performance and safety, including such things as, airbags, braking, stability, ride and handling, emissions systems, aerodynamics, durability, and electronic systems like anti-lock brakes, traction control and stability control. Some of these accessories may even cause malfunction or damage not covered by warranty.

GM Accessories are designed to complement and function with other systems on your vehicle. Your GM dealer can accessorize your vehicle using genuine GM Accessories. When you go to your GM dealer and ask for GM Accessories, you will know that GM-trained and supported service technicians will perform the work using genuine GM Accessories.

Downloaded from www.Manualslib.com manuals search engine

California Proposition 65 Warning

Most motor vehicles, including this one, contain and/or emit chemicals known to the State of California to cause cancer and birth defects or other reproductive harm. Engine exhaust, many parts and systems (including some inside the vehicle), many fluids, and some component wear by-products contain and/or emit these chemicals.

Doing Your Own Service Work

⚠ CAUTION:

You can be injured and your vehicle could be damaged if you try to do service work on a vehicle without knowing enough about it.

- **Be sure you have sufficient knowledge, experience, the proper replacement parts, and tools before you attempt any vehicle maintenance task.**

CAUTION: (Continued)

CAUTION: (Continued)

- **Be sure to use the proper nuts, bolts, and other fasteners. English and metric fasteners can be easily confused. If you use the wrong fasteners, parts can later break or fall off. You could be hurt.**

If you want to do some of your own service work, you will want to use the proper service manual. It tells you much more about how to service your vehicle than this manual can. To order the proper service manual, see *Service Publications Ordering Information on page 380*.

Your vehicle has an airbag system. Before attempting to do your own service work, see *Servicing Your Airbag-Equipped Vehicle on page 54*.

You should keep a record with all parts receipts and list the mileage and the date of any service work you perform. See *Part E: Maintenance Record on page 357*.

Downloaded from www.Manualslib.com manuals search engine

Adding Equipment to the Outside of Your Vehicle

Things you might add to the outside of your vehicle can affect the airflow around it. This may cause wind noise and affect windshield washer performance. Check with your dealer before adding equipment to the outside of your vehicle.

Fuel

Use of the recommended fuel is an important part of the proper maintenance of your vehicle. To help keep your engine clean and maintain optimum vehicle performance, GM recommends the use of gasoline advertised as TOP TIER Detergent Gasoline.

Gasoline Octane

Use premium unleaded gasoline with a posted octane rating of 91 or higher. You may also use regular unleaded gasoline rated at 87 octane or higher, but your vehicle's acceleration may be slightly reduced, and you may notice a slight audible knocking noise, commonly referred to as spark knock.

If the octane is less than 87, you may notice a heavy knocking noise when you drive. If this occurs, use a gasoline rated at 87 octane or higher as soon as possible. Otherwise, you might damage your engine. If you are using gasoline rated at 87 octane or higher and you hear heavy knocking, your engine needs service.

Gasoline Specifications

At a minimum, gasoline should meet ASTM specification D 4814 in the United States or CAN/CGSB-3.5 in Canada. Some gasolines may contain an octane-enhancing additive called methylcyclopentadienyl manganese tricarbonyl (MMT). General Motors recommends against the use of gasolines containing MMT. See *Additives on page 238* for additional information.

Downloaded from www.Manualslib.com manuals search engine

California Fuel

If your vehicle is certified to meet California Emissions Standards, it is designed to operate on fuels that meet California specifications. See the underhood emission control label. If this fuel is not available in states adopting California emissions standards, your vehicle will operate satisfactorily on fuels meeting federal specifications, but emission control system performance may be affected. The malfunction indicator lamp may turn on and your vehicle may fail a smog-check test. See *Malfunction Indicator Lamp on page 138*. If this occurs, return to your authorized GM dealer for diagnosis. If it is determined that the condition is caused by the type of fuel used, repairs may not be covered by your warranty.

Additives

To provide cleaner air, all gasolines in the United States are now required to contain additives that will help prevent engine and fuel system deposits from forming, allowing your emission control system to work properly. In most cases, you should not have to add anything to your fuel. However, some gasolines contain only the minimum amount of additive required to meet U.S. Environmental Protection Agency regulations. To help keep fuel injectors and intake valves clean, or if your vehicle experiences problems due to dirty injectors or valves, look for gasoline that is advertised as TOP TIER Detergent Gasoline. Also, your dealer has additives that will help correct and prevent most deposit-related problems.

Downloaded from www.Manualslib.com manuals search engine

Gasolines containing oxygenates, such as ethers and ethanol, and reformulated gasolines may be available in your area. General Motors recommends that you use these gasolines if they comply with the specifications described earlier. However, E85 (85% ethanol) and other fuels containing more than 10% ethanol must not be used in vehicles that were not designed for those fuels.

Notice: **Your vehicle was not designed for fuel that contains methanol. Do not use fuel containing methanol. It can corrode metal parts in your fuel system and also damage the plastic and rubber parts. That damage would not be covered under your warranty.**

Some gasolines that are not reformulated for low emissions may contain an octane-enhancing additive called methylcyclopentadienyl manganese tricarbonyl (MMT); ask the attendant where you buy gasoline whether the fuel contains MMT. General Motors recommends against the use of such gasolines. Fuels containing MMT can reduce the life of spark plugs and the performance of the emission control system may be affected. The malfunction indicator lamp may turn on. If this occurs, return to your dealer for service.

Fuels in Foreign Countries

If you plan on driving in another country outside the United States or Canada, the proper fuel may be hard to find. Never use leaded gasoline or any other fuel not recommended in the previous text on fuel. Costly repairs caused by use of improper fuel would not be covered by your warranty.

To check the fuel availability, ask an auto club, or contact a major oil company that does business in the country where you will be driving.

Downloaded from www.Manualslib.com manuals search engine

Filling the Tank

⚠ CAUTION:

Fuel vapor burns violently and a fuel fire can cause bad injuries. To help avoid injuries to you and others, read and follow all the instructions on the pump island. Turn off your engine when you are refueling. Do not smoke if you are near fuel or refueling your vehicle. Keep sparks, flames, and smoking materials away from fuel. Do not leave the fuel pump unattended when refueling your vehicle. This is against the law in some places. Keep children away from the fuel pump; never let children pump fuel.

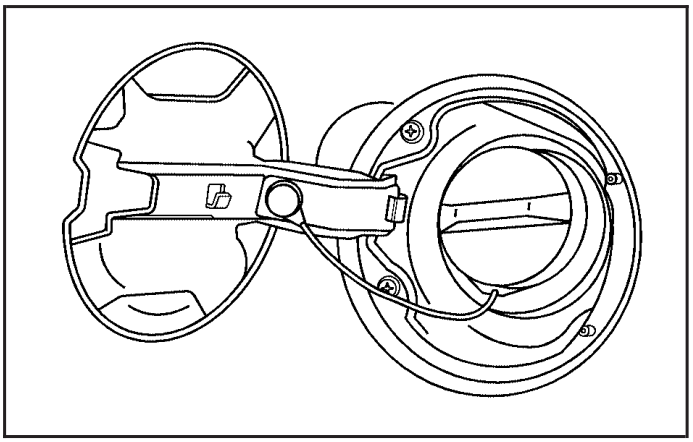

The tethered fuel cap is located behind a hinged fuel door on the driver side of the vehicle.

To remove the fuel cap, turn it slowly counterclockwise. The fuel cap has a spring in it; if the cap is released too soon, it will spring back to the right.

While refueling, hang the tethered fuel cap from the hook on the fuel door.

Downloaded from www.Manualslib.com manuals search engine

⚠ CAUTION:

If you spill fuel and then something ignites it, you could be badly burned. Fuel can spray out on you if you open the fuel cap too quickly. This spray can happen if your tank is nearly full, and is more likely in hot weather. Open the fuel cap slowly and wait for any hiss noise to stop. Then unscrew the cap all the way.

Be careful not to spill fuel. Do not top off or overfill the tank and wait a few seconds after you have finished pumping before removing the nozzle. Clean fuel from painted surfaces as soon as possible. See *Washing Your Vehicle on page 318*.

When replacing the fuel cap, turn it clockwise until it clicks. Make sure the cap is fully installed. The diagnostic system can determine if the fuel cap has been left off or improperly installed. This would allow fuel to evaporate into the atmosphere. See *Malfunction Indicator Lamp on page 138*.

If your vehicle has a Driver Information Center (DIC), the CHECK GAS CAP message will be displayed if the fuel cap is not properly installed. See *DIC Warnings and Messages on page 148* for more information.

⚠ CAUTION:

If a fire starts while you are refueling, do not remove the nozzle. Shut off the flow of fuel by shutting off the pump or by notifying the station attendant. Leave the area immediately.

Notice: **If you need a new fuel cap, be sure to get the right type. Your dealer can get one for you. If you get the wrong type, it may not fit properly. This may cause your malfunction indicator lamp to light and may damage your fuel tank and emissions system. See *Malfunction Indicator Lamp on page 138*.**

Downloaded from www.Manualslib.com manuals search engine

Filling a Portable Fuel Container

⚠ CAUTION:

Never fill a portable fuel container while it is in your vehicle. Static electricity discharge from the container can ignite the gasoline vapor. You can be badly burned and your vehicle damaged if this occurs. To help avoid injury to you and others:

- **Dispense gasoline only into approved containers.**
- **Do not fill a container while it is inside a vehicle, in a vehicle's trunk, pickup bed, or on any surface other than the ground.**
- **Bring the fill nozzle in contact with the inside of the fill opening before operating the nozzle. Contact should be maintained until the filling is complete.**
- **Do not smoke while pumping gasoline.**

Checking Things Under the Hood

⚠ CAUTION:

An electric fan under the hood can start up and injure you even when the engine is not running. Keep hands, clothing, and tools away from any underhood electric fan.

⚠ CAUTION:

Things that burn can get on hot engine parts and start a fire. These include liquids like fuel, oil, coolant, brake fluid, windshield washer and other fluids, and plastic or rubber. You or others could be burned. Be careful not to drop or spill things that will burn onto a hot engine.

Downloaded from www.Manualslib.com manuals search engine

Hood Release

To open the hood, do the following:

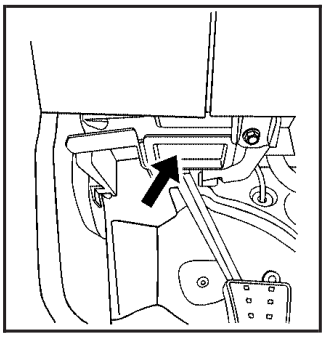

1. Locate the interior hood release lever. It is located below the instrument panel on the driver's side of the vehicle.

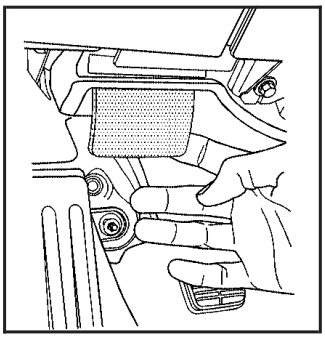

2. Pull down on the rear edge of the lever to release the hood latch.
3. Go to the side of the vehicle and pull up on the rear edge of the hood, near the windshield to open the hood.

Notice: **Closing the hood with the doors open may damage the hood and/or doors. Always close the doors before closing the hood.**

Before closing the hood, be sure all the filler caps are on properly. Then, pull the hood down and close it firmly.

Downloaded from www.Manualslib.com manuals search engine

Engine Compartment Overview

When you open the hood on the 2.4L L4 engine, this is what you will see:

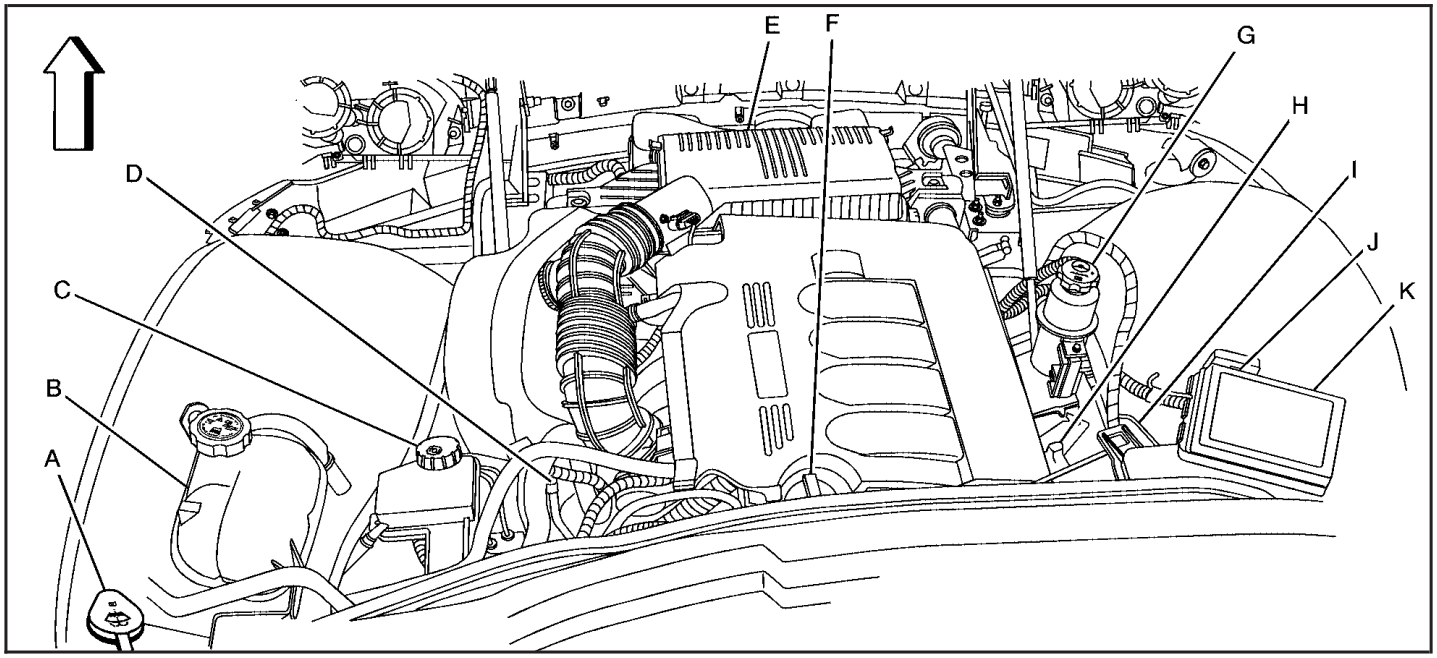

Downloaded from www.Manualslib.com manuals search engine

A. Windshield Washer Fluid Reservoir. See “Adding Washer Fluid” under *Windshield Washer Fluid on page 269*.

B. Coolant Surge Tank and Pressure Cap. See *Cooling System on page 262*.

C. Brake Master Cylinder Reservoir. See “Brake Fluid” under *Brakes on page 270* and *Hydraulic Clutch on page 256*.

D. Engine Oil Dipstick (Out of View). See “Checking Engine Oil” under *Engine Oil on page 247*.

E. Engine Air Cleaner/Filter. See *Engine Air Cleaner/Filter on page 254*.

F. Engine Oil Fill Cap. See “When to Add Engine Oil” under *Engine Oil on page 247*.

G. Power Steering Fluid Reservoir. See *Power Steering Fluid on page 268*.

H. Remote Negative (–) Ground (Out of View). See *Jump Starting on page 274*.

I. Battery (Out of View). See *Battery on page 273*.

J. Remote Positive (+) Terminal. See *Jump Starting on page 274*.

K. Underhood Fuse Block. See *Underhood Fuse Block on page 329*.

Downloaded from www.Manualslib.com manuals search engine

When you open the hood on the 2.0L L4 engine, this is what you will see:

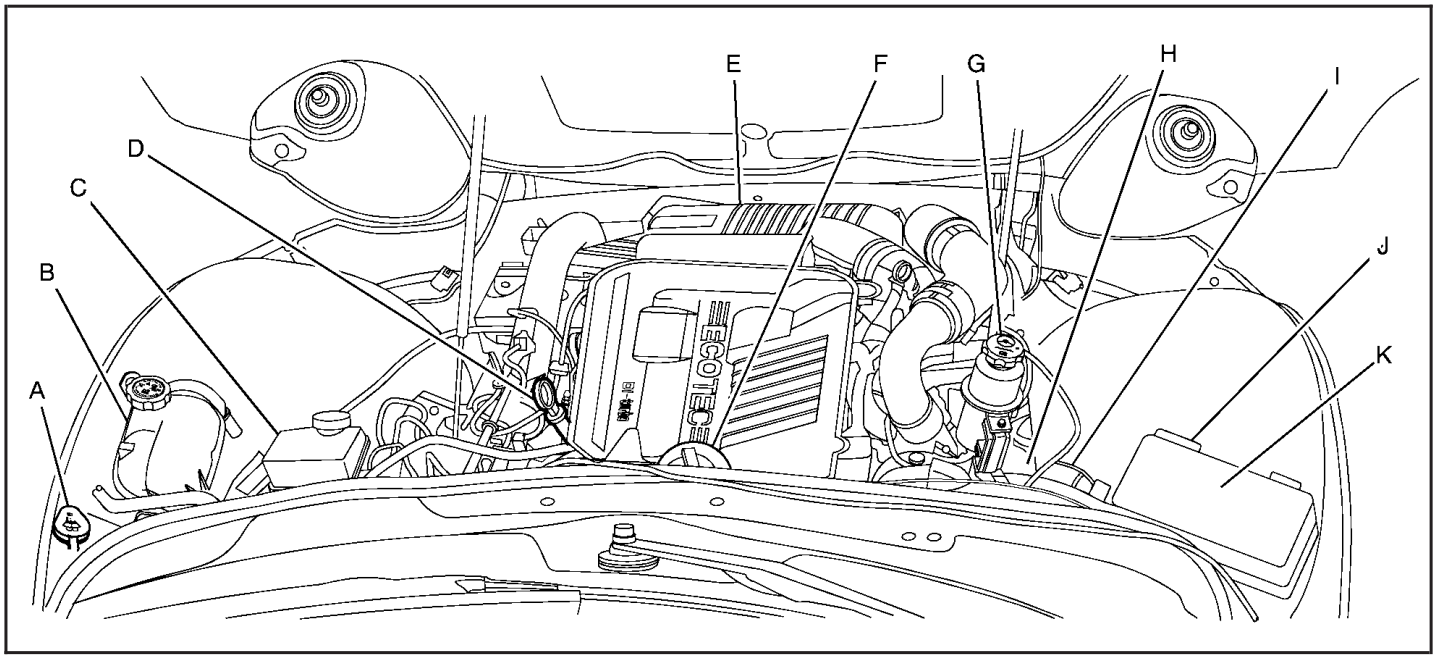

Downloaded from www.Manualslib.com manuals search engine

A. Windshield Washer Fluid Reservoir. See “Adding Washer Fluid” under *Windshield Washer Fluid on page 269*.

B. Coolant Surge Tank and Pressure Cap. See *Cooling System on page 262*.

C. Brake Master Cylinder Reservoir. See “Brake Fluid” under *Brakes on page 270* and *Hydraulic Clutch on page 256*.

D. Engine Oil Dipstick. See “Checking Engine Oil” under *Engine Oil on page 247*.

E. Engine Air Cleaner/Filter. See *Engine Air Cleaner/Filter on page 254*.

F. Engine Oil Fill Cap. See “When to Add Engine Oil” under *Engine Oil on page 247*.

G. Power Steering Fluid Reservoir. See *Power Steering Fluid on page 268*.

H. Remote Negative (–) Ground (Out of View). See *Jump Starting on page 274*.

I. Battery (Out of View). See *Battery on page 273*.

J. Remote Positive (+) Terminal. See *Jump Starting on page 274*.

K. Underhood Fuse Block. See *Underhood Fuse Block on page 329*.

Engine Oil

Checking Engine Oil

It is a good idea to check the engine oil every time you get fuel. In order to get an accurate reading, the oil must be warm and the vehicle must be on level ground.

The engine oil dipstick handle is a yellow loop. See *Engine Compartment Overview on page 244* for the location of the engine oil dipstick.

1. Turn off the engine and give the oil several minutes to drain back into the oil pan. If you do not do this, the oil dipstick might not show the actual level.
2. Pull the dipstick and clean it with a paper towel or cloth, then push it back in all the way. Remove it again, keeping the tip down and check the level.

Downloaded from www.Manualslib.com manuals search engine

When to Add Engine Oil

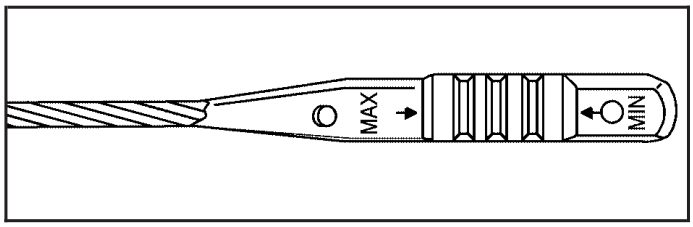

If the oil is below the MIN (minimum) mark, you will need to add at least one quart/liter of oil. But you must use the right kind. This section explains what kind of oil to use. For engine oil crankcase capacity, see *Capacities and Specifications on page 332*.

Notice: **Do not add too much oil. If the engine has so much oil that the oil level gets above the upper mark that shows the proper operating range, the engine could be damaged.**

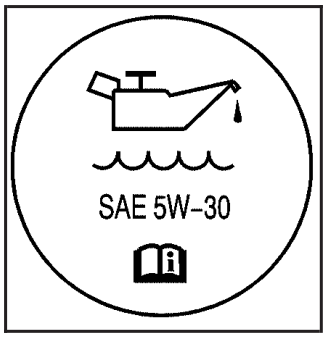

2.4L L4 Engine

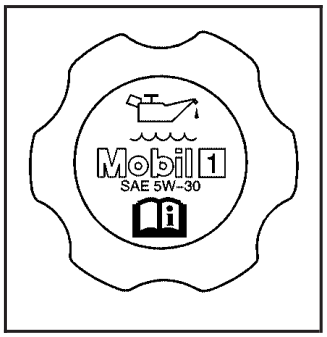

2.0L L4 Engine

See *Engine Compartment Overview on page 244* for the location of the engine oil fill cap.

Be sure to add enough oil to put the level somewhere in the proper operating range. Push the dipstick all the way back in when you are through.

Downloaded from www.Manualslib.com manuals search engine

What Kind of Engine Oil to Use

For Vehicles With the 2.0L L4 Engine

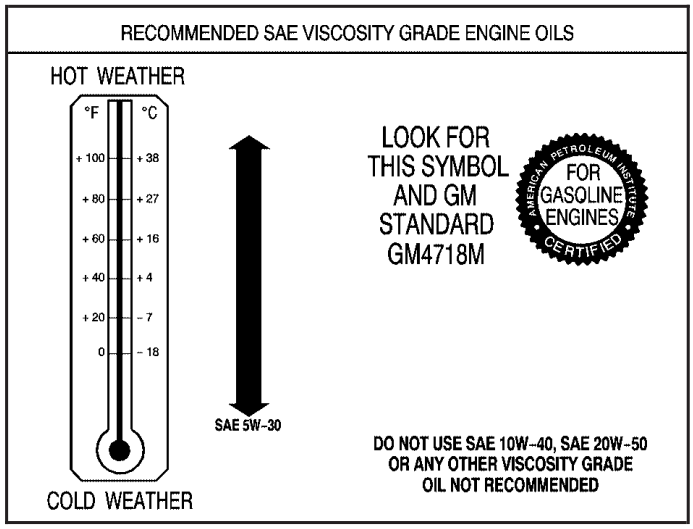

Look for two things:

- GM4718M

  Your vehicle's engine requires a special oil meeting GM Standard GM4718M, such as Mobil 1® or equivalent. Oils meeting this standard may be identified as synthetic. However, not all synthetic oils will meet this GM standard. You should look for and use only an oil that meets GM Standard GM4718M.

Notice: **If you use oils that do not have the GM4718M Standard designation, you can cause engine damage not covered by your warranty.**

- SAE 5W-30

  As shown in the viscosity chart, SAE 5W-30 is best for your vehicle.

  These numbers on an oil container show its viscosity, or thickness. Do not use other viscosity oils such as SAE 20W-50.

Oils meeting these requirements should also have the starburst symbol on the container. This symbol indicates that the oil has been certified by the American Petroleum Institute (API).

You should look for this on the oil container, and use only those oils that are identified as meeting GM Standard GM4718M and have the starburst symbol on the front of the oil container.

Downloaded from www.Manualslib.com manuals search engine

Your vehicle's engine is filled at the factory with a synthetic oil which meets all requirements for your vehicle.

Substitute Engine Oil: When adding oil to maintain engine oil level, oil meeting GM Standard GM4718M may not be available. You can add substitute oil designated SAE 5W-30 with the starburst symbol at all temperatures. Substitute oil not meeting GM Standard GM4718M should not be used for an oil change.

For Vehicles With the 2.4L L4 Engine

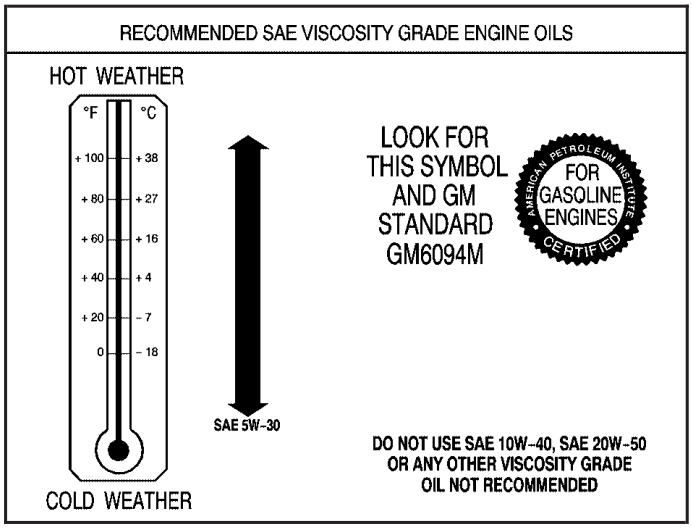

Look for two things:

- GM6094M
  Your vehicle's engine requires oil meeting GM Standard GM6094M. You should look for and use only an oil that meets GM Standard GM6094M.
- SAE 5W-30
  As shown in the viscosity chart, SAE 5W-30 is best for your vehicle.

Downloaded from www.Manualslib.com manuals search engine

These numbers on an oil container show its viscosity, or thickness. Do not use other viscosity oils such as SAE 20W-50.

Oils meeting these requirements should also have the starburst symbol on the container. This symbol indicates that the oil has been certified by the American Petroleum Institute (API).

You should look for this information on the oil container, and use only those oils that are identified as meeting GM Standard GM6094M and have the starburst symbol on the front of the oil container.

Notice: **Use only engine oil identified as meeting GM Standard GM6094M and showing the American Petroleum Institute Certified For Gasoline Engines starburst symbol. Failure to use the recommended oil can result in engine damage not covered by your warranty.**

GM Goodwrench® oil meets all the requirements for your vehicle.

If you are in an area of extreme cold, where the temperature falls below –20°F (–29°C), it is recommended that you use either an SAE 5W-30 synthetic oil or an SAE 0W-30 oil. Both will provide easier cold starting and better protection for the engine at extremely low temperatures.

Engine Oil Additives

Do not add anything to the oil. The recommended oils with the starburst symbol that meet GM Standard GM6094M are all you will need for good performance and engine protection.

When to Change Engine Oil (Vehicles Without a Driver Information Center)

If your vehicle does not have a Driver Information Center (DIC), change the engine oil and filter at the intervals specified in the maintenance schedule. See *Scheduled Maintenance on page 337*.

If your vehicle has a DIC, it has the Engine Oil Life System. See *Engine Oil Life System on page 252* for information on when to change the engine oil.

Downloaded from www.Manualslib.com manuals search engine

Engine Oil Life System

When to Change Engine Oil (Vehicles With Driver Information Center)

If your vehicle has a Driver Information Center (DIC), it has the Engine Oil Life System, a computer system that lets you know when to change the engine oil and filter. This is based on engine revolutions and engine temperature, and not on mileage. Based on driving conditions, the mileage at which an oil change will be indicated can vary considerably. For the oil life system to work properly, you must reset the system every time the oil is changed.

When the system has calculated that oil life has been diminished, it will indicate that an oil change is necessary. A CHANGE OIL SOON message will come on. See *DIC Warnings and Messages on page 148*. Change the oil as soon as possible within the next 600 miles (1 000 km). It is possible that, if you are driving under the best conditions, the oil life system may not indicate that an oil change is necessary for over a year.

However, the engine oil and filter must be changed at least once a year and at this time the system must be reset. Your dealer has GM-trained service people who will perform this work using genuine GM parts and reset the system. It is also important to check your oil regularly and keep it at the proper level.

If the system is ever reset accidentally, you must change the oil at 3,000 miles (5 000 km) since the last oil change. Remember to reset the oil life system whenever the oil is changed.

How to Reset the Engine Oil Life System

The Engine Oil Life System calculates when to change your engine oil and filter based on vehicle use. Anytime your oil is changed, reset the system so it can calculate when the next oil change is required. If a situation occurs where you change your oil prior to a CHANGE OIL SOON message being turned on, reset the system.

Downloaded from www.Manualslib.com manuals search engine

After changing the engine oil, the system must be reset as follows:

1. Turn the ignition to RUN, with the engine off.
2. Press the information and reset buttons on the DIC at the same time to enter the personalization menu. See *DIC Vehicle Personalization on page 152*.
3. Press the information button to scroll through the available personalization menu modes until the DIC display shows OIL-LIFE RESET.
4. Press and hold the reset button until the DIC display shows ACKNOWLEDGED. This will tell you the system has been reset.
5. Turn the key to LOCK.

If the CHANGE OIL SOON message comes back on when you start your vehicle, the engine oil life system has not reset. Repeat the reset procedure.

What to Do with Used Oil

Used engine oil contains certain elements that may be unhealthy for your skin and could even cause cancer. Do not let used oil stay on your skin for very long. Clean your skin and nails with soap and water, or a good hand cleaner. Wash or properly dispose of clothing or rags containing used engine oil. See the manufacturer's warnings about the use and disposal of oil products.

Used oil can be a threat to the environment. If you change your own oil, be sure to drain all the oil from the filter before disposal. Never dispose of oil by putting it in the trash, pouring it on the ground, into sewers, or into streams or bodies of water. Instead, recycle it by taking it to a place that collects used oil. If you have a problem properly disposing of used oil, ask your dealer, a service station, or a local recycling center for help.

Downloaded from www.Manualslib.com manuals search engine

Engine Air Cleaner/Filter

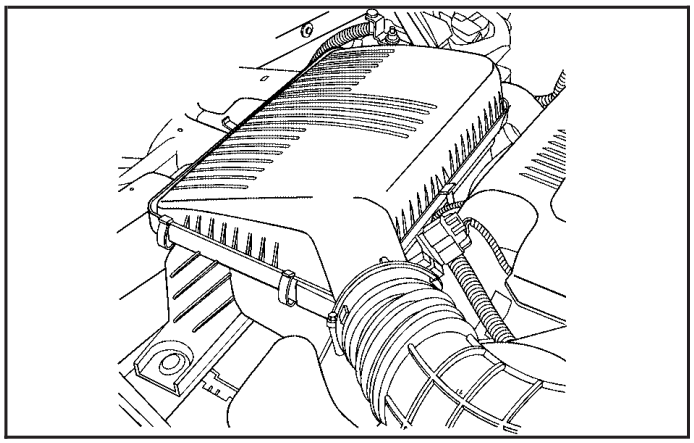

2.4L L4 Engine

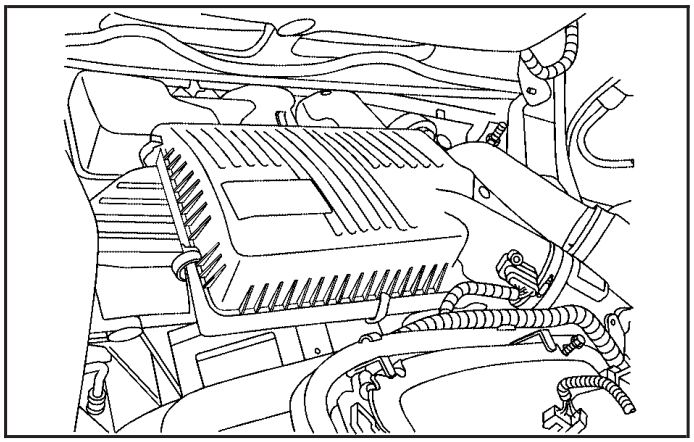

2.0L L4 Engine

See *Engine Compartment Overview on page 244* for the location of the engine air cleaner/filter.

Downloaded from www.Manualslib.com manuals search engine

When to Inspect the Engine Air Cleaner/Filter

Inspect the air cleaner/filter element at each scheduled Maintenance II service interval and replace the air cleaner/filter element at the first oil change after 50,000 miles (85 000 km). If you are driving in dusty/dirty conditions, inspect the filter at each engine oil change.

How to Inspect the Engine Air Cleaner/Filter

To inspect the air cleaner/filter remove the filter from the vehicle and lightly shake the filter to release loose dust and dirt. If the filter remains caked with dirt, a new filter is required.

To inspect or replace the filter, open the clamps that hold the cover on and lift off the cover. Be sure to reinstall the cover tightly.

⚠ CAUTION:

Operating the engine with the air cleaner/filter off can cause you or others to be burned. The air cleaner not only cleans the air; it helps to stop flames if the engine backfires. If it is not there and the engine backfires, you could be burned. Do not drive with it off, and be careful working on the engine with the air cleaner/filter off.

Notice: **If the air cleaner/filter is off, a backfire can cause a damaging engine fire. And, dirt can easily get into your engine, which will damage it. Always have the air cleaner/filter in place when you are driving.**

Downloaded from www.Manualslib.com manuals search engine

Automatic Transmission Fluid

It is not necessary to check the transmission fluid level. A transmission fluid leak is the only reason for fluid loss. If a leak occurs, take your vehicle to the dealership service department and have it repaired as soon as possible.

Change the fluid and filter at the intervals listed in the Maintenance Schedule. See *Part A: Scheduled Maintenance Services on page 336*. Be sure to use the transmission fluid listed in *Part D: Recommended Fluids and Lubricants on page 353*.

Notice: **Use of the incorrect automatic transmission fluid may damage your vehicle, and the damages may not be covered by your warranty. Always use the automatic transmission fluid listed in *Part D: Recommended Fluids and Lubricants on page 353*.**

Manual Transmission Fluid

It is not necessary to check the manual transmission fluid level. A transmission fluid leak is the only reason for fluid loss. If a leak occurs, take the vehicle to the dealership service department and have it repaired as soon as possible. You may also have your fluid level checked by your dealer when you have your oil changed. See *Part D: Recommended Fluids and Lubricants on page 353* for the proper fluid to use.

Hydraulic Clutch

The hydraulic clutch linkage in your vehicle is self-adjusting. This system does not have its own reservoir. It receives fluid from the brake master cylinder reservoir.

See *Brakes on page 270* for more information.

Downloaded from www.Manualslib.com manuals search engine

Engine Coolant

The cooling system in your vehicle is filled with DEX-COOL® engine coolant. This coolant is designed to remain in your vehicle for five years or 150,000 miles (240 000 km), whichever occurs first, if you add only DEX-COOL® extended life coolant.

The following explains your cooling system and how to add coolant when it is low. If you have a problem with engine overheating, see *Engine Overheating on page 260*.

A 50/50 mixture of clean, drinkable water and DEX-COOL® coolant will:

- Give freezing protection down to –34°F (–37°C).
- Give boiling protection up to 265°F (129°C).
- Protect against rust and corrosion.
- Help keep the proper engine temperature.
- Let the warning lights and gages work as they should.

Notice: **Using coolant other than DEX-COOL® may cause premature engine, heater core, or radiator corrosion. In addition, the engine coolant may require changing sooner, at the first maintenance service after each 30,000 miles (50 000 km) or 24 months, whichever occurs first. Any repairs would not be covered by your warranty. Always use DEX-COOL® (silicate-free) coolant in your vehicle.**

Downloaded from www.Manualslib.com manuals search engine

What to Use

Use a mixture of one-half clean, drinkable water and one-half DEX-COOL® coolant which will not damage aluminum parts. If you use this coolant mixture, you do not need to add anything else.

⚠ CAUTION:

Adding only plain water to your cooling system can be dangerous. Plain water, or some other liquid such as alcohol, can boil before the proper coolant mixture will. Your vehicle's coolant warning system is set for the proper coolant mixture. With plain water or the wrong mixture, your engine could get too hot but you would not get the overheat warning. Your engine could catch fire and you or others could be burned. Use a 50/50 mixture of clean, drinkable water and DEX-COOL® coolant.

Notice: **If you use an improper coolant mixture, your engine could overheat and be badly damaged. The repair cost would not be covered by your warranty. Too much water in the mixture can freeze and crack the engine, radiator, heater core, and other parts.**

If you have to add coolant more than four times a year, have your dealer check your cooling system.

Notice: **If you use extra inhibitors and/or additives in your vehicle's cooling system, you could damage your vehicle. Use only the proper mixture of the engine coolant listed in this manual for the cooling system. See** ***Part D: Recommended Fluids and Lubricants on page 353*** **for more information.**

Downloaded from www.Manualslib.com manuals search engine

Checking Coolant

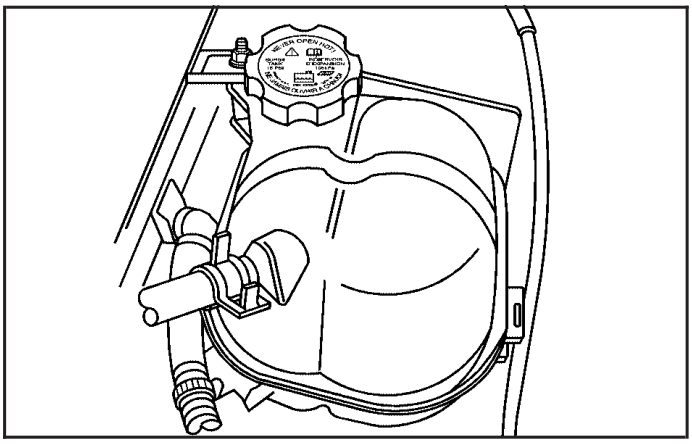

The coolant surge tank is located in the engine compartment on the driver's side of the vehicle. See *Engine Compartment Overview on page 244* for more information on location.

⚠ CAUTION:

Turning the surge tank pressure cap when the engine and radiator are hot can allow steam and scalding liquids to blow out and burn you badly. Never turn the surge tank pressure cap — even a little — when the engine and radiator are hot.

The vehicle must be on a level surface. When your engine is cold, the coolant level should be at the COLD FILL line.

Do not overfill the surge tank. Too much coolant can result in an overflow condition when the fluid is hot.

Downloaded from www.Manualslib.com manuals search engine

Adding Coolant

If you need more coolant, add the proper DEX-COOL® coolant mixture at the coolant surge tank, but only when the engine is cool. If the coolant surge tank is empty, a special fill procedure is necessary. See *Engine Overheating on page 260* for instructions on "How to Add Coolant to the Coolant Surge Tank."

⚠ CAUTION:

You can be burned if you spill coolant on hot engine parts. Coolant contains ethylene glycol, and it will burn if the engine parts are hot enough. Do not spill coolant on a hot engine.

When replacing the pressure cap, make sure it is hand-tight and fully seated.

Coolant Surge Tank Pressure Cap

Notice: **If the pressure cap is not tightly installed, coolant loss and possible engine damage may occur. Be sure the cap is properly and tightly secured.**

The coolant surge tank pressure cap must be fully installed on the coolant surge tank. See *Engine Compartment Overview on page 244* for more information on location.

Engine Overheating

There is an engine coolant temperature warning light on your vehicle's instrument panel. See *Engine Coolant Temperature Warning Light on page 137* for more information.

Downloaded from www.Manualslib.com manuals search engine

If Steam Is Coming From Your Engine

⚠ CAUTION:

Steam from an overheated engine can burn you badly, even if you just open the hood. Stay away from the engine if you see or hear steam coming from it. Just turn it off and get everyone away from the vehicle until it cools down. Wait until there is no sign of steam or coolant before you open the hood.

If you keep driving when your engine is overheated, the liquids in it can catch fire. You or others could be badly burned. Stop your engine if it overheats, and get out of the vehicle until the engine is cool.

Notice: **If your engine catches fire because you keep driving with no coolant, your vehicle can be badly damaged. The costly repairs would not be covered by your warranty.**

If No Steam Is Coming From Your Engine

An engine coolant temperature warning can indicate a serious problem. See *Engine Coolant Temperature Warning Light on page 137*.

If you get an engine coolant temperature warning, but see or hear no steam, the problem may not be too serious. Sometimes the engine can get a little too hot when you:

- Climb a long hill on a hot day.
- Stop after high-speed driving.
- Idle for long periods in traffic.

If you get the engine coolant temperature warning with no sign of steam, try this for a minute or so:

1. If your air conditioner is on, turn it off.
2. In heavy traffic, let the engine idle in NEUTRAL (N) while stopped. If it is safe to do so, pull off the road, shift to PARK (P) or NEUTRAL (N) and let the engine idle.
3. Turn on your heater to full hot at the highest fan speed and open the windows as necessary.

Downloaded from www.Manualslib.com manuals search engine

If you no longer have the overheat warning, you can drive. Just to be safe, drive slower for about 10 minutes. If the warning does not come back on, you can drive normally.

If the warning continues and you have not stopped, pull over, stop, and park your vehicle right away.

If there is still no sign of steam, you can idle the engine for three minutes while you are parked. If you still have the warning, turn off the engine and get everyone out of the vehicle until it cools down.

You may decide not to lift the hood but to get service help right away.

Cooling System

When you decide it is safe to lift the hood, here is what you will see:

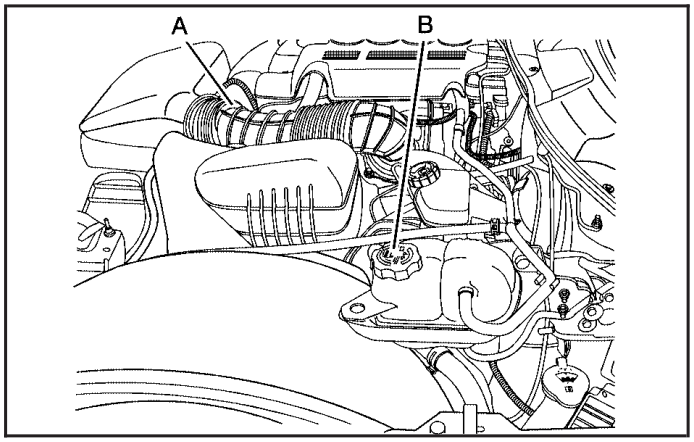

2.4L L4 Engine

A. Electric Engine Cooling Fan (Out of View)

B. Coolant Surge Tank and Pressure Cap

Downloaded from www.Manualslib.com manuals search engine

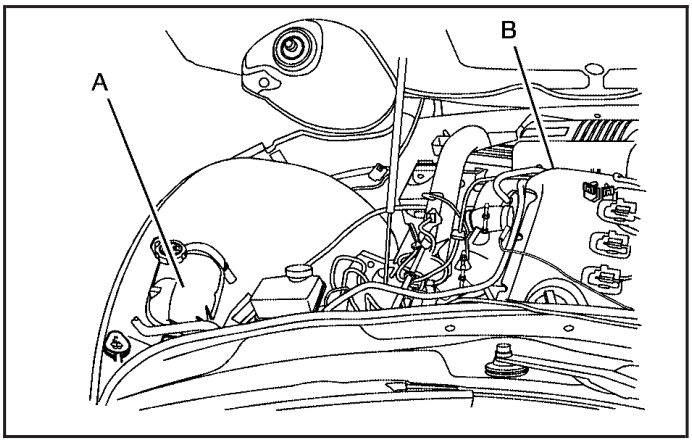

2.0L L4 Engine

A. Coolant Surge Tank and Pressure Cap
B. Electric Engine Cooling Fan (Out of View)

⚠ CAUTION:

An electric engine cooling fan under the hood can start up even when the engine is not running and can injure you. Keep hands, clothing, and tools away from any underhood electric fan.

If the coolant inside the coolant surge tank is boiling, do not do anything else until it cools down. The vehicle should be parked on a level surface.

Downloaded from www.Manualslib.com manuals search engine

The coolant level should be at the COLD FILL line. If it is not, you may have a leak at the pressure cap or in the radiator hoses, heater hoses, radiator, water pump, or somewhere in the cooling system.

⚠ CAUTION:

Heater and radiator hoses, and other engine parts, can be very hot. Do not touch them. If you do, you can be burned.

Do not run the engine if there is a leak. If you run the engine, it could lose all coolant. That could cause an engine fire, and you could be burned. Get any leak fixed before you drive the vehicle.

If there seems to be no leak, with the engine on, check to see if the electric engine cooling fan are running. If the engine is overheating, the fan should be running. If they are not, your vehicle needs service.

Notice: **Engine damage from running your engine without coolant is not covered by your warranty.**

Notice: **Using coolant other than DEX-COOL® may cause premature engine, heater core, or radiator corrosion. In addition, the engine coolant could require changing sooner, at 30,000 miles (50 000 km) or 24 months, whichever occurs first. Any repairs would not be covered by your warranty. Always use DEX-COOL® (silicate-free) coolant in your vehicle.**

How to Add Coolant to the Coolant Surge Tank

Notice: **Your engine has a specific cooling system drain and fill procedure. Failure to follow this procedure could cause your engine to overheat and be severely damaged. If your engine's cooling system needs to be drained and re-filled, please see your dealer.**

If you have not found a problem yet, check to see if coolant is visible in the coolant surge tank.

Downloaded from www.Manualslib.com manuals search engine

If coolant is visible but the coolant level is not at the COLD FILL line, add a 50/50 mixture of clean, drinkable water and DEX-COOL® coolant at the coolant surge tank, but be sure the cooling system, including the coolant surge tank pressure cap, is cool before you do it. See *Engine Coolant on page 257* for more information.

If no coolant is visible in the coolant surge tank, add coolant as follows:

⚠ CAUTION:

Steam and scalding liquids from a hot cooling system can blow out and burn you badly. They are under pressure, and if you turn the coolant surge tank pressure cap — even a little — they can come out at high speed. Never turn the cap when the cooling system, including the coolant surge tank pressure cap, is hot. Wait for the cooling system and coolant surge tank pressure cap to cool if you ever have to turn the pressure cap.

⚠ CAUTION:

Adding only plain water to your cooling system can be dangerous. Plain water, or some other liquid such as alcohol, can boil before the proper coolant mixture will. Your vehicle's coolant warning system is set for the proper coolant mixture. With plain water or the wrong mixture, your engine could get too hot but you would not get the overheat warning. Your engine could catch fire and you or others could be burned. Use a 50/50 mixture of clean, drinkable water and DEX-COOL® coolant.

Notice: **In cold weather, water can freeze and crack the engine, radiator, heater core and other parts. Use the recommended coolant and the proper coolant mixture.**

Downloaded from www.Manualslib.com manuals search engine

⚠ CAUTION:

You can be burned if you spill coolant on hot engine parts. Coolant contains ethylene glycol and it will burn if the engine parts are hot enough. Do not spill coolant on a hot engine.

1. Remove the coolant surge tank pressure cap when the cooling system, including the coolant surge tank pressure cap and upper radiator hose, is no longer hot. Turn the pressure cap slowly counterclockwise about two or two and one-half turns. If you hear a hiss, wait for that to stop. This will allow any pressure still left to be vented out the discharge hose.

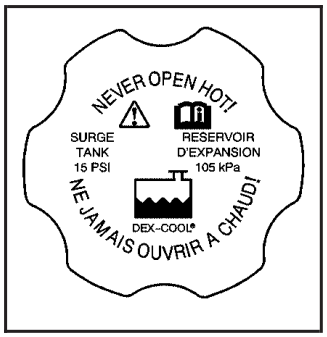

2. Then keep turning the pressure cap slowly, and remove it.

Downloaded from www.Manualslib.com manuals search engine

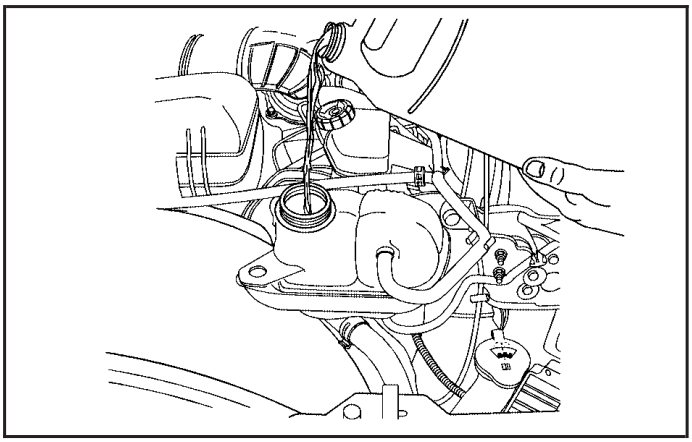

3. Fill the coolant surge tank with the proper mixture, to the COLD FILL line. Wait about five minutes, then check to see if the level is below the COLD FILL line. If the level is below the line, add additional coolant to bring the level up to the line. Repeat this procedure until the level remains constant at the COLD FILL line for at least five minutes.

4. With the coolant surge tank pressure cap off, start the engine and let it run until you can feel the upper radiator hose getting hot. Watch out for the engine cooling fan.

   By this time, the coolant level inside the coolant surge tank may be lower. If the level is lower than the COLD FILL line, add more of the proper mixture to the coolant surge tank until the level reaches the COLD FILL line.

5. Then replace the pressure cap. Be sure the pressure cap is hand-tight and fully seated.

   See your dealer, if necessary.

Downloaded from www.Manualslib.com manuals search engine

Power Steering Fluid

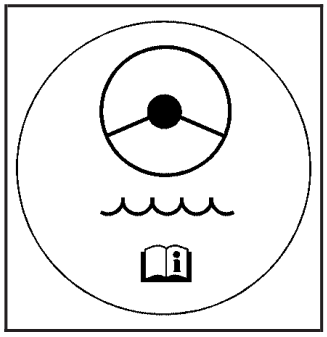

See *Engine Compartment Overview on page 244* for reservoir location.

When to Check Power Steering Fluid

It is not necessary to regularly check power steering fluid unless you suspect there is a leak in the system or you hear an unusual noise. A fluid loss in this system could indicate a problem. Have the system inspected and repaired.

How to Check Power Steering Fluid

To check the power steering fluid, do the following:

1. Turn the key off and let the engine compartment cool down.
2. Wipe the cap and the top of the reservoir clean.
3. Unscrew the cap and wipe the dipstick with a clean rag.
4. Replace the cap and completely tighten it.
5. Remove the cap again and look at the fluid level on the dipstick.

The level should be between the COLD and HOT marks. If necessary, add only enough fluid to bring the level up to the COLD mark.

What to Use

To determine what kind of fluid to use, see *Part D: Recommended Fluids and Lubricants on page 353*. Always use the proper fluid. Failure to use the proper fluid can cause leaks and damage hoses and seals.

Downloaded from www.Manualslib.com manuals search engine

Windshield Washer Fluid

What to Use

When you need windshield washer fluid, be sure to read the manufacturer's instructions before use. If you will be operating your vehicle in an area where the temperature may fall below freezing, use a fluid that has sufficient protection against freezing.

Adding Washer Fluid

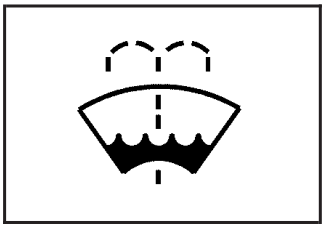

Open the cap with the washer symbol on it. Add washer fluid until the tank is full. See *Engine Compartment Overview on page 244* for reservoir location.

Notice:

- **When using concentrated washer fluid, follow the manufacturer's instructions for adding water.**
- **Do not mix water with ready-to-use washer fluid. Water can cause the solution to freeze and damage your washer fluid tank and other parts of the washer system. Also, water does not clean as well as washer fluid.**
- **Fill your washer fluid tank only three-quarters full when it is very cold. This allows for expansion if freezing occurs, which could damage the tank if it is completely full.**
- **Do not use engine coolant (antifreeze) in your windshield washer. It can damage your washer system and paint.**

Downloaded from www.Manualslib.com manuals search engine

Brakes

Brake Fluid

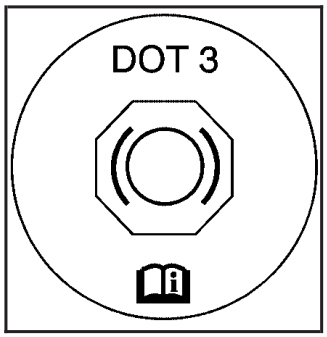

Your brake master cylinder reservoir is filled with DOT-3 brake fluid. See *Engine Compartment Overview on page 244* for the location of the reservoir.

There are only two reasons why the brake fluid level in the reservoir might go down. The first is that the brake fluid goes down to an acceptable level during normal brake lining wear. When new linings are put in, the fluid level goes back up. The other reason is that fluid is leaking out of the brake and/or clutch hydraulic system. If it is, you should have your brake and/or clutch system fixed, since a leak means that sooner or later your brakes and/or clutch will not work well, or will not work at all.

So, it is not a good idea to top off your brake/clutch fluid. Adding fluid will not correct a leak. If you add fluid when your brake linings are worn, then you will have too much fluid when you get new brake linings. You should add or remove fluid, as necessary, only when work is done on the brake/clutch hydraulic system.

⚠ CAUTION:

If your vehicle has too much brake fluid, it can spill on the engine. The fluid will burn if the engine is hot enough. You or others could be burned, and your vehicle could be damaged. Add brake fluid only when work is done on the brake and/or clutch hydraulic system.

When your brake fluid falls to a low level, your brake warning light will come on. See *Brake System Warning Light on page 134*.

Downloaded from www.Manualslib.com manuals search engine

What to Add

When you do need brake fluid, use only DOT-3 brake fluid. Use new brake fluid from a sealed container only. See *Part D: Recommended Fluids and Lubricants on page 353*.

Always clean the brake fluid reservoir cap and the area around the cap before removing it. This will help keep dirt from entering the reservoir.

⚠ CAUTION:

With the wrong kind of fluid in the brake/clutch system, the brakes/clutch may not work well, or they may not even work at all. This could cause a crash. Always use the proper brake fluid.

Notice:

- **Using the wrong fluid can badly damage brake/clutch system parts. For example, just a few drops of mineral-based oil, such as engine oil, in the brake/clutch hydraulic system can damage brake/clutch system parts so badly that they will have to be replaced. Do not let someone put in the wrong kind of fluid.**
- **If you spill brake fluid on your vehicle's painted surfaces, the paint finish can be damaged. Be careful not to spill brake fluid on your vehicle. If you do, wash it off immediately. See *Washing Your Vehicle on page 318*.**

Downloaded from www.Manualslib.com manuals search engine

Brake Wear

Your vehicle has four-wheel disc brakes.

Front disc brake pads have built-in wear indicators that make a high-pitched warning sound when the brake pads are worn and new pads are needed. The sound may come and go or be heard all the time your vehicle is moving, except when you are pushing on the brake pedal firmly.

⚠ CAUTION:

The brake wear warning sound means that soon the brakes will not work well. That could lead to an accident. When you hear the brake wear warning sound, have your vehicle serviced.

Notice: **Continuing to drive with worn-out brake pads could result in costly brake repair.**

Some driving conditions or climates may cause a brake squeal when the brakes are first applied or lightly applied. This does not mean something is wrong with your brakes.

Properly torqued wheel nuts are necessary to help prevent brake pulsation. When tires are rotated, inspect brake pads for wear and evenly tighten wheel nuts in the proper sequence to GM torque specifications.

Brake linings should always be replaced as complete axle sets.

Brake Pedal Travel

See your dealer if the brake pedal does not return to normal height, or if there is a rapid increase in pedal travel. This could be a sign of brake trouble.

Brake Adjustment

Every time you apply the brakes, with or without the vehicle moving, your brakes adjust for wear.

Downloaded from www.Manualslib.com manuals search engine

Replacing Brake System Parts

The braking system on a vehicle is complex. Its many parts have to be of top quality and work well together if the vehicle is to have really good braking. Your vehicle was designed and tested with top-quality GM brake parts. When you replace parts of your braking system — for example, when your brake linings wear down and you need new ones put in — be sure you get new approved GM replacement parts. If you do not, your brakes may no longer work properly. For example, if someone puts in brake linings that are wrong for your vehicle, the balance between your front and rear brakes can change — for the worse. The braking performance you have come to expect can change in many other ways if someone puts in the wrong replacement brake parts.

Battery

Your vehicle has a maintenance free battery. When it is time for a new battery, get one that has the replacement number shown on the original battery's label. We recommend an ACDelco® replacement battery. See *Engine Compartment Overview on page 244* for battery location.

Warning: Battery posts, terminals, and related accessories contain lead and lead compounds, chemicals known to the State of California to cause cancer and reproductive harm. Wash hands after handling.

Vehicle Storage

If you are not going to drive your vehicle for 25 days or more, remove the black, negative (–) cable from the battery. This will help keep your battery from running down.

⚠ CAUTION:

Batteries have acid that can burn you and gas that can explode. You can be badly hurt if you are not careful. See *Jump Starting on page 274* for tips on working around a battery without getting hurt.

Downloaded from www.Manualslib.com manuals search engine

Jump Starting

If your vehicle's battery has run down, you may want to use another vehicle and some jumper cables to start your vehicle. Be sure to use the following steps to do it safely.

⚠ CAUTION:

Batteries can hurt you. They can be dangerous because:

- **They contain acid that can burn you.**
- **They contain gas that can explode or ignite.**
- **They contain enough electricity to burn you.**

If you do not follow these steps exactly, some or all of these things can hurt you.

Notice: **Ignoring these steps could result in costly damage to your vehicle that would not be covered by your warranty.**

Trying to start your vehicle by pushing or pulling it will not work, and it could damage your vehicle.

1. Check the other vehicle. It must have a 12-volt battery with a negative ground system.

Notice: **If the other vehicle's system is not a 12-volt system with a negative ground, both vehicles can be damaged. Only use vehicles with 12-volt systems with negative grounds to jump start your vehicle.**

2. Get the vehicles close enough so the jumper cables can reach, but be sure the vehicles are not touching each other. If they are, it could cause a ground connection you do not want. You would not be able to start your vehicle, and the bad grounding could damage the electrical systems.

   To avoid the possibility of the vehicles rolling, set the parking brake firmly on both vehicles involved in the jump start procedure. Put an automatic transmission in PARK (P) or a manual transmission in NEUTRAL before setting the parking brake.

Downloaded from www.Manualslib.com manuals search engine

Notice: **If you leave your radio or other accessories on during the jump starting procedure, they could be damaged. The repairs would not be covered by your warranty. Always turn off your radio and other accessories when jump starting your vehicle.**

3. Turn off the ignition on both vehicles. Unplug unnecessary accessories plugged into the cigarette lighter or the accessory power outlet. Turn off the radio and all lamps that are not needed. This will avoid sparks and help save both batteries. And it could save the radio!

4. Open the hood on the other vehicle and locate the positive (+) and negative (–) terminal locations on that vehicle.

   You will not need to access your battery for jump starting. Your vehicle has a remote positive (+) and a remote negative (–) jump starting terminal.

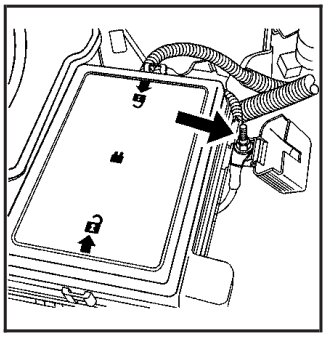

The remote positive (+) terminal is located under a red plastic cover on the engine compartment fuse block. Open the cover to access the terminal.

Downloaded from www.Manualslib.com manuals search engine

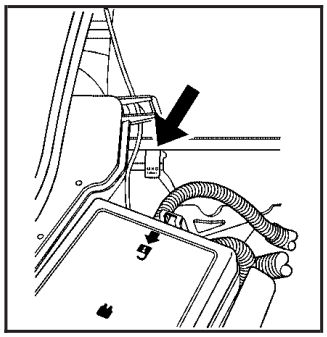

The remote negative (–) ground bracket is located in the rear of the engine compartment, on the passenger's side of the vehicle, and is marked GND (–).

See *Engine Compartment Overview on page 244* for more information on the location of the positive (+) and negative (–) terminals on your vehicle.

⚠ CAUTION:

An electric fan can start up even when the engine is not running and can injure you. Keep hands, clothing and tools away from any underhood electric fan.

⚠ CAUTION:

Using a match near a battery can cause battery gas to explode. People have been hurt doing this, and some have been blinded. Use a flashlight if you need more light.

Be sure the battery has enough water. You do not need to add water to the battery installed in your new vehicle. But if a battery has filler caps, be sure the right amount of fluid is there. If it is low, add water to take care of that first. If you don't, explosive gas could be present.

Battery fluid contains acid that can burn you. Do not get it on you. If you accidentally get it in your eyes or on your skin, flush the place with water and get medical help immediately.

Downloaded from www.Manualslib.com manuals search engine

⚠ CAUTION:

Fans or other moving engine parts can injure you badly. Keep your hands away from moving parts once the engine is running.

5. Check that the jumper cables do not have loose or missing insulation. If they do, you could get a shock. The vehicles could be damaged too.

   Before you connect the cables, here are some basic things you should know. Positive (+) will go to positive (+) or to a remote positive (+) terminal if the vehicle has one. Negative (–) will go to a heavy, unpainted metal engine part or to a remote negative (–) terminal if the vehicle has one.

   Do not connect positive (+) to negative (–) or you will get a short that would damage the battery and maybe other parts too. And do not connect the negative (–) cable to the negative (–) terminal on the dead battery because this can cause sparks.

6. Connect the red positive (+) cable to the positive (+) terminal location on the vehicle with the dead battery. Use a remote positive (+) terminal if the vehicle has one.
7. Do not let the other end touch metal. Connect it to the positive (+) terminal of the good battery. Use a remote positive (+) terminal if the vehicle has one.
8. Now connect the black negative (–) cable to the negative (–) terminal of the good battery. Use a remote negative (–) terminal if the vehicle has one.

   Do not let the other end touch anything until the next step. The other end of the negative (–) cable does not go to the dead battery. It goes to a heavy, unpainted metal engine part or to a remote negative (–) terminal on the vehicle with the dead battery.

Downloaded from www.Manualslib.com manuals search engine

9. Connect the other end of the negative (–) cable to the negative (–) terminal location on the vehicle with the dead battery. Your vehicle has a remote negative (–) ground bracket for this purpose.
10. Now start the vehicle with the good battery and run the engine for a while.
11. Try to start the vehicle that had the dead battery. If it will not start after a few tries, it probably needs service.

Notice: **If the jumper cables are connected or removed in the wrong order, electrical shorting may occur and damage the vehicle. The repairs would not be covered by your warranty. Always connect and remove the jumper cables in the correct order, making sure that the cables do not touch each other or other metal.**

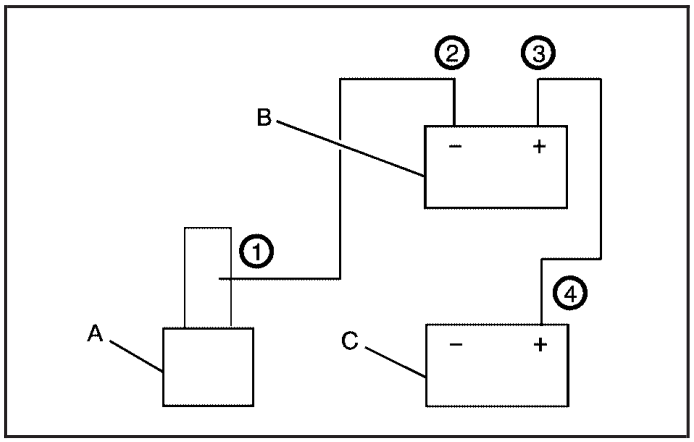

Jumper Cable Removal

A. Heavy, Unpainted Metal Engine Part or Remote Negative (–) Terminal
B. Good Battery or Remote Positive (+) and Remote Negative (–) Terminals
C. Dead Battery or Remote Positive (+) Terminal

Downloaded from www.Manualslib.com manuals search engine

To disconnect the jumper cables from both vehicles, do the following:

1. Disconnect the black negative (–) cable from the vehicle that had the dead battery.
2. Disconnect the black negative (–) cable from the vehicle with the good battery.
3. Disconnect the red positive (+) cable from the vehicle with the good battery.
4. Disconnect the red positive (+) cable from the other vehicle.
5. Return the positive (+) terminal cover to its original position.

Rear Axle

When to Check Lubricant

It is not necessary to regularly check rear axle fluid unless you suspect there is a leak or you hear an unusual noise. A fluid loss could indicate a problem. Have it inspected and repaired.

How to Check Lubricant

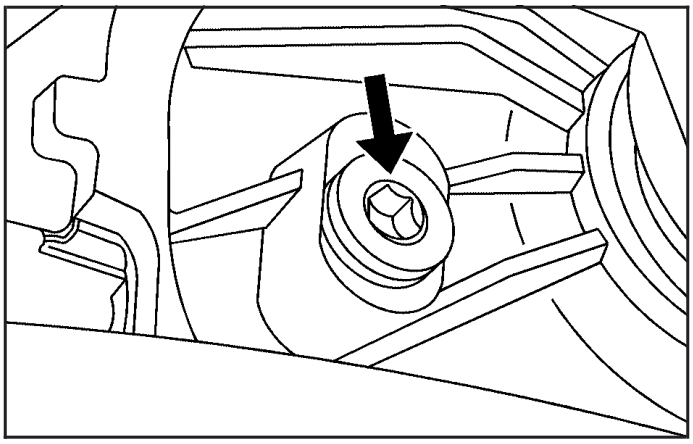

To get an accurate reading, the vehicle should be on a level surface.

If the level is below the bottom of the filler plug hole, located on the rear axle, you'll need to add some lubricant. Add enough lubricant to raise the level to the bottom of the filler plug hole.

What to Use

Refer to the Maintenance Schedule to determine what kind of lubricant to use. See *Part D: Recommended Fluids and Lubricants on page 353*.

Downloaded from www.Manualslib.com manuals search engine

Bulb Replacement

For the proper type of replacement bulbs, see *Replacement Bulbs on page 283*.

For any bulb changing procedure not listed in this section, contact your dealer.

Halogen Bulbs

⚠ CAUTION:

Halogen bulbs have pressurized gas inside and can burst if you drop or scratch the bulb. You or others could be injured. Be sure to read and follow the instructions on the bulb package.

Headlamps

To replace the low/high-beam/Daytime Running Lamps (DRL) headlamp bulb, do the following:

1. Open the hood. See *Hood Release on page 243* for more information.
2. Locate the headlamp bulb socket.

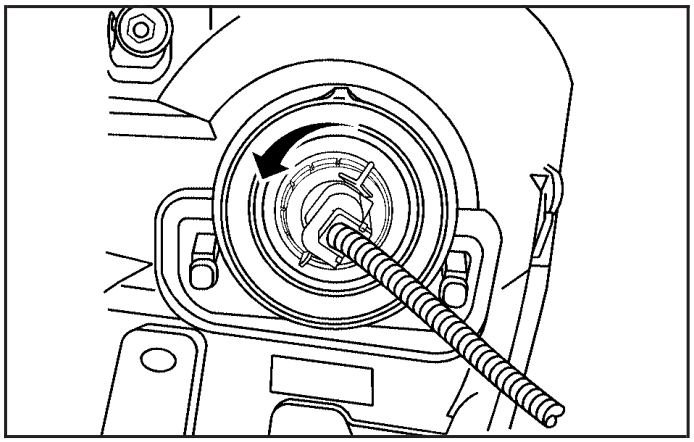

3. Turn the bulb socket counterclockwise and pull it from the headlamp assembly.
4. Holding the base of the socket, pull the old bulb from the socket.
5. Replace with a new bulb.
6. Reverse Steps 3 through 4 to reinstall.

Downloaded from www.Manualslib.com manuals search engine

Front Turn Signal, Parking and Fog Lamps

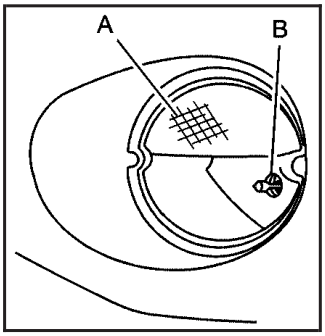

A. Front Turn Signal/ Parking Lamp
B. Fog Lamp (If Equipped)

To replace one of these bulbs, do the following:

1. Open the hood. See *Hood Release on page 243* for more information.
2. Reach underneath the front bumper and locate the bulb assembly.
3. Turn the bulb socket counterclockwise and pull out the bulb assembly.
4. Disconnect the bulb socket from the wiring harness.
5. Install a new bulb.
6. Reverse the steps to reinstall the bulb assembly and headlamp assembly.

Taillamps, Turn Signal, and Stoplamps

To replace one of these bulbs, do the following:

1. Open the trunk. See *Trunk on page 68* for more information.

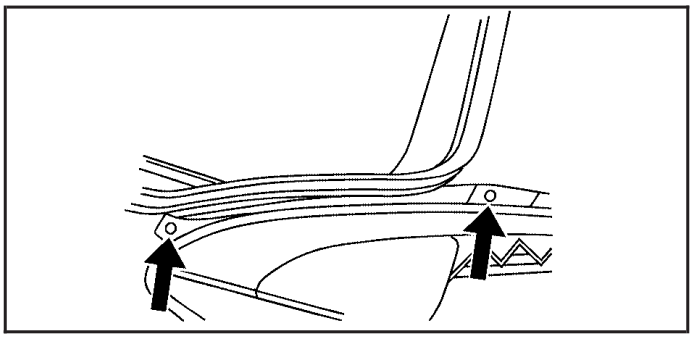

2. Remove the two screws, which hold the taillamp assembly, from inside the vehicle.
3. Remove the taillamp assembly.
4. Turn the bulb socket counterclockwise to remove.
5. Pull the bulb from the socket.
6. Install a new bulb.
7. Reverse the steps to reinstall the taillamp assembly.

Downloaded from www.Manualslib.com manuals search engine

Back-Up Lamps

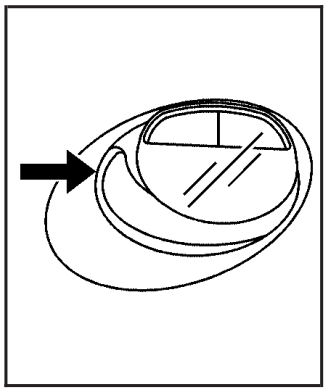

The back-up lamps are located in the rear bumper.

To replace a bulb, do the following:

1. Reach behind, up and under the rear bumper and locate the bulb socket.
2. Turn it counterclockwise to remove from the bulb assembly.
3. Pull the bulb from the bulb socket.
4. Push in a new bulb into the bulb socket.
5. Reinstall the bulb socket by lining up the tabs in the lamp assembly and turn it clockwise to secure it.

License Plate Lamp

To replace the license plate lamp bulb, do the following:

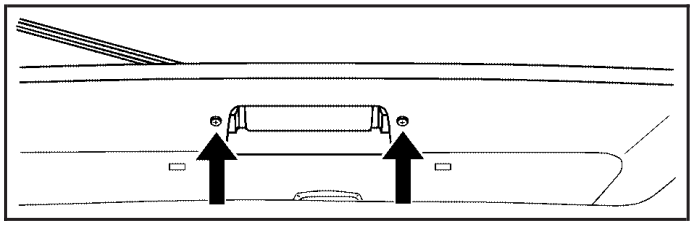

1. Remove the two screws holding the license plate lamp assembly to the fascia.
2. Turn and pull the license plate lamp forward through the fascia opening.
3. Turn the bulb socket counterclockwise and pull the bulb straight out of the socket.
4. Install the new bulb.
5. Reverse Steps 1 through 3 to reinstall the lamp assembly.

Downloaded from www.Manualslib.com manuals search engine

Replacement Bulbs

Exterior Lamp	Bulb Number
Back-Up Lamps	3047
Fog Lamp	898*
Front Parking/Turn Signal Lamp	3757NAK
Front Sidemarker Lamp	194
Headlamps, High/Low-Beam/ Daytime Running Lights	H13
License Plate Lamp	168
Stoplamp, Taillamp and Turn Signal Lamp	3157K
* Uplevel Model	

For replacement bulbs not listed here, contact your dealer.

Windshield Wiper Blade Replacement

Windshield wiper blades should be inspected for wear and cracking. See *At Least Twice a Year on page 347* for more information.

Replacement blades come in different types and are removed in different ways. For proper type and length, see *Normal Maintenance Replacement Parts on page 355*.

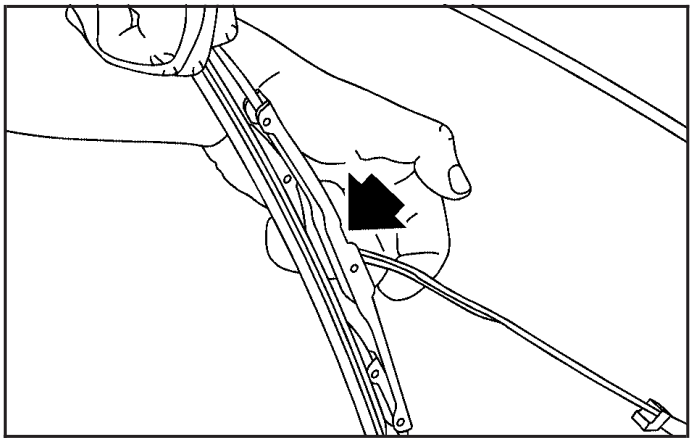

To replace the windshield wiper blade assembly do the following:

1. Lift the wiper arm away from the windshield.

Downloaded from www.Manualslib.com manuals search engine

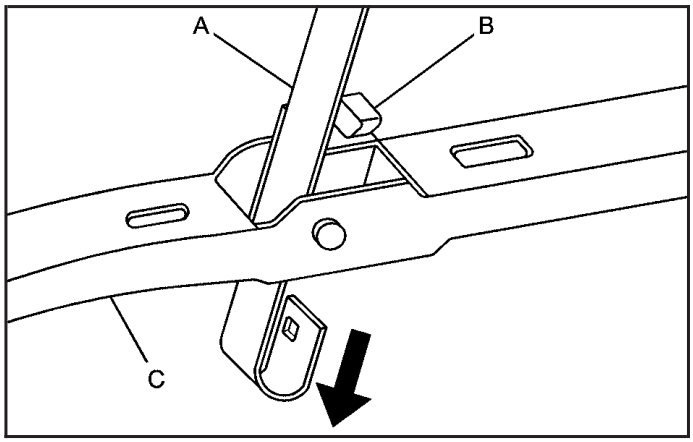

2. Push the release lever (B) to disengage the hook and push the wiper arm (A) out of the blade (C).
3. Push the new wiper blade securely on the wiper arm until you hear the release lever click into place.

Tires

Your new vehicle comes with high-quality tires made by a leading tire manufacturer. If you ever have questions about your tire warranty and where to obtain service, see your GM Warranty booklet for details. For additional information refer to the tire manufacturer's booklet included with your vehicle's Owner Manual.

⚠ CAUTION:

Poorly maintained and improperly used tires are dangerous.

- **Overloading your vehicle's tires can cause overheating as a result of too much friction. You could have an air-out and a serious accident. See *Loading Your Vehicle on page 226*.**

CAUTION: (Continued)

Downloaded from www.Manualslib.com manuals search engine

CAUTION: (Continued)

- **Underinflated tires pose the same danger as overloaded tires. The resulting accident could cause serious injury. Check all tires frequently to maintain the recommended pressure. Tire pressure should be checked when your vehicle's tires are cold. See *Inflation - Tire Pressure on page 292*.**
- **Overinflated tires are more likely to be cut, punctured, or broken by a sudden impact — such as when you hit a pothole. Keep tires at the recommended pressure.**
- **Worn, old tires can cause accidents. If the tire's tread is badly worn, or if your vehicle's tires have been damaged, replace them.**

Notice: **If your vehicle has P245/45R18 size tires, they are classified as low-profile tires. Low-profile tires are more susceptible to damage from road hazards or curb impact than standard profile tires. Tire and or wheel assembly damage can occur when coming into contact with road hazards like, potholes or sharp edged objects or when sliding into a curb. Your GM warranty does not cover this type of damage. Keep tires set to the correct inflation pressure and when possible avoid contact with curbs, potholes and other road hazards.**

Winter Tires

If your vehicle has P245/45R18 size tires, they are classified as low-profile performance tires. These tires are designed for very responsive driving on wet or dry pavement. If you expect to drive on snow or ice covered roads often, you may want to get winter tires for your vehicle. The low-profile performance tires may not offer the traction you would like or the same level of performance as winter tires on snow or ice covered roads.

Downloaded from www.Manualslib.com manuals search engine

Winter tires, in general, are designed for increased traction on snow and ice covered roads. With winter tires, there may be decreased dry road traction, increased road noise, and shorter tire tread life. After switching to winter tires, be alert for changes in vehicle handling and braking.

See your dealer for details regarding winter tire availability and proper tire selection. Also, see *Buying New Tires on page 296*.

If you choose to use winter tires:

- Use tires of the same brand and tread type on all four wheel positions.
- Use only radial ply tires of the same size, load range, and speed rating as the original equipment tires.

Winter tires with the same speed rating as your original equipment tires may not be available for H, V, W, Y, and ZR speed rated tires. If you choose winter tires with a lower speed rating, never exceed the tire's maximum speed capability.

Tire Sidewall Labeling

Useful information about a tire is molded into its sidewall. The example below shows a typical passenger (p-metric) tire sidewall.

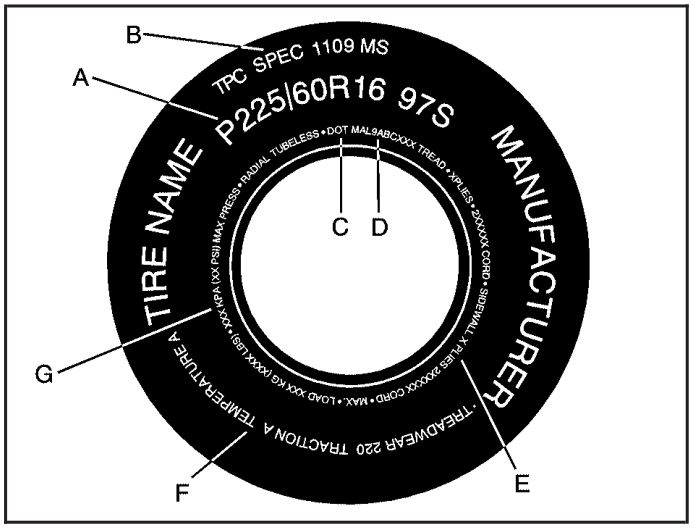

Passenger (P-Metric) Tire Example

Downloaded from www.Manualslib.com manuals search engine

(A) Tire Size: The tire size is a combination of letters and numbers used to define a particular tire's width, height, aspect ratio, construction type, and service description. See the "Tire Size" illustration later in this section for more detail.

(B) TPC Spec (Tire Performance Criteria Specification): Original equipment tires designed to GM's specific tire performance criteria have a TPC specification code molded onto the sidewall. GM's TPC specifications meet or exceed all federal safety guidelines.

(C) DOT (Department of Transportation): The Department of Transportation (DOT) code indicates that the tire is in compliance with the U.S. Department of Transportation Motor Vehicle Safety Standards.

(D) Tire Identification Number (TIN): The letters and numbers following DOT code are the Tire Identification Number (TIN). The TIN shows the manufacturer and plant code, tire size, and date the tire was manufactured. The TIN is molded onto both sides of the tire, although only one side may have the date of manufacture.

(E) Tire Ply Material: The type of cord and number of plies in the sidewall and under the tread.

(F) Uniform Tire Quality Grading (UTQG): Tire manufacturers are required to grade tires based on three performance factors: treadwear, traction and temperature resistance. For more information see *Uniform Tire Quality Grading on page 298*.

(G) Maximum Cold Inflation Load Limit: Maximum load that can be carried and the maximum pressure needed to support that load.

Downloaded from www.Manualslib.com manuals search engine

Tire Size

The following illustration shows an example of a typical passenger (p-metric) vehicle tire size.

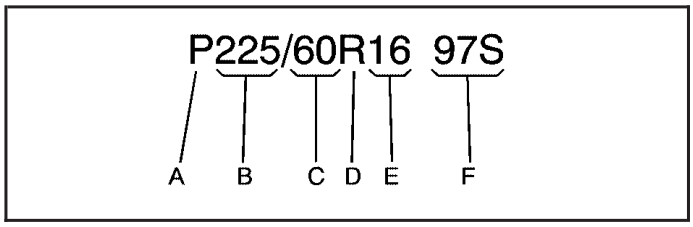

(A) Passenger (P-Metric) Tire: The United States version of a metric tire sizing system. The letter P as the first character in the tire size means a passenger vehicle tire engineered to standards set by the U. S. Tire and Rim Association.

(B) Tire Width: The three-digit number indicates the tire section width in millimeters from sidewall to sidewall.

(C) Aspect Ratio: A two-digit number that indicates the tire height-to-width measurements. For example, if the tire size aspect ratio is 60, as shown in item C of the illustration, it would mean that the tire's sidewall is 60 percent as high as it is wide.

(D) Construction Code: A letter code is used to indicate the type of ply construction in the tire. The letter R means radial ply construction; the letter D means diagonal or bias ply construction; and the letter B means belted-bias ply construction.

(E) Rim Diameter: Diameter of the wheel in inches.

(F) Service Description: These characters represent the load range and speed rating of the tire. The load index represents the load carry capacity a tire is certified to carry. The load index can range from 1 to 279. The speed rating is the maximum speed a tire is certified to carry a load. Speed ratings range from A to Z.

Downloaded from www.Manualslib.com manuals search engine

Tire Terminology and Definitions

Air Pressure: The amount of air inside the tire pressing outward on each square inch of the tire. Air pressure is expressed in pounds per square inch (psi) or kilopascal (kPa).

Accessory Weight: This means the combined weight of optional accessories. Some examples of optional accessories are, automatic transmission/ transaxle, power steering, power brakes, power windows, power seats, and air conditioning.

Aspect Ratio: The relationship of a tire's height to its width.

Belt: A rubber coated layer of cords that is located between the plies and the tread. Cords may be made from steel or other reinforcing materials.

Bead: The tire bead contains steel wires wrapped by steel cords that hold the tire onto the rim.

Bias Ply Tire: A pneumatic tire in which the plies are laid at alternate angles less than 90 degrees to the centerline of the tread.

Cold Tire Pressure: The amount of air pressure in a tire, measured in pounds per square inch (psi) or kilopascals (kPa) before a tire has built up heat from driving. See *Inflation - Tire Pressure on page 292*.

Curb Weight: This means the weight of a motor vehicle with standard and optional equipment including the maximum capacity of fuel, oil, and coolant, but without passengers and cargo.

DOT Markings: A code molded into the sidewall of a tire signifying that the tire is in compliance with the U.S. Department of Transportation (DOT) motor vehicle safety standards. The DOT code includes the Tire Identification Number (TIN), an alphanumeric designator which can also identify the tire manufacturer, production plant, brand, and date of production.

GVWR: Gross Vehicle Weight Rating. See *Loading Your Vehicle on page 226*.

GAWR FRT: Gross Axle Weight Rating for the front axle. See *Loading Your Vehicle on page 226*.

Downloaded from www.Manualslib.com manuals search engine

GAWR RR: Gross Axle Weight Rating for the rear axle. See *Loading Your Vehicle on page 226*.

Intended Outboard Sidewall: The side of an asymmetrical tire, that must always face outward when mounted on a vehicle.

Kilopascal (kPa): The metric unit for air pressure.

Light Truck (LT-Metric) Tire: A tire used on light duty trucks and some multipurpose passenger vehicles.

Load Index: An assigned number ranging from 1 to 279 that corresponds to the load carrying capacity of a tire.

Maximum Inflation Pressure: The maximum air pressure to which a cold tire may be inflated. The maximum air pressure is molded onto the sidewall.

Maximum Load Rating: The load rating for a tire at the maximum permissible inflation pressure for that tire.

Maximum Loaded Vehicle Weight: The sum of curb weight, accessory weight, vehicle capacity weight, and production options weight.

Normal Occupant Weight: The number of occupants a vehicle is designed to seat multiplied by 150 lbs (68 kg). See *Loading Your Vehicle on page 226*.

Occupant Distribution: Designated seating positions.

Outward Facing Sidewall: The side of an asymmetrical tire that has a particular side that faces outward when mounted on a vehicle. The side of the tire that contains a whitewall, bears white lettering, or bears manufacturer, brand, and/or model name molding that is higher or deeper than the same moldings on the other sidewall of the tire.

Passenger (P-Metric) Tire: A tire used on passenger cars and some light duty trucks and multipurpose vehicles.

Recommended Inflation Pressure: Vehicle manufacturer's recommended tire inflation pressure as shown on the tire placard. See *Inflation - Tire Pressure on page 292* and *Loading Your Vehicle on page 226*.

Downloaded from www.Manualslib.com manuals search engine

Radial Ply Tire: A pneumatic tire in which the ply cords that extend to the beads are laid at 90 degrees to the centerline of the tread.

Rim: A metal support for a tire and upon which the tire beads are seated.

Sidewall: The portion of a tire between the tread and the bead.

Speed Rating: An alphanumeric code assigned to a tire indicating the maximum speed at which a tire can operate.

Traction: The friction between the tire and the road surface. The amount of grip provided.

Tread: The portion of a tire that comes into contact with the road.

Treadwear Indicators: Narrow bands, sometimes called wear bars, that show across the tread of a tire when only 1/16 inch (1.6 mm) of tread remains. See *When It Is Time for New Tires on page 295*.

UTQGS (Uniform Tire Quality Grading Standards): A tire information system that provides consumers with ratings for a tire's traction, temperature, and treadwear. Ratings are determined by tire manufacturers using government testing procedures. The ratings are molded into the sidewall of the tire. See *Uniform Tire Quality Grading on page 298*.

Vehicle Capacity Weight: The number of designated seating positions multiplied by 150 lbs (68 kg) plus the rated cargo load. See *Loading Your Vehicle on page 226*.

Vehicle Maximum Load on the Tire: Load on an individual tire due to curb weight, accessory weight, occupant weight, and cargo weight.

Vehicle Placard: A label permanently attached to a vehicle showing the vehicle's capacity weight and the original equipment tire size and recommended inflation pressure. See "Tire and Loading Information Label" under *Loading Your Vehicle on page 226*.

Downloaded from www.Manualslib.com manuals search engine

Inflation - Tire Pressure

Tires need the correct amount of air pressure to operate effectively.

Notice: **Do not let anyone tell you that under-inflation or over-inflation is all right. It is not. If your tires do not have enough air (under-inflation), you can get the following:**

- **Too much flexing**
- **Too much heat**
- **Tire overloading**
- **Premature or irregular wear**
- **Poor handling**
- **Reduced fuel economy**

If your tires have too much air (over-inflation), you can get the following:

- **Unusual wear**
- **Poor handling**
- **Rough ride**
- **Needless damage from road hazards**

A Tire and Loading Information label is attached to the vehicle's center pillar (B-pillar), below the driver's door latch. This label shows your vehicle's original equipment tires and the correct inflation pressures for your tires when they are cold. The recommended cold tire inflation pressure, shown on the label, is the minimum amount of air pressure needed to support your vehicle's maximum load carrying capacity.

For additional information regarding how much weight your vehicle can carry, and an example of the Tire and Loading Information label, see *Loading Your Vehicle on page 226*. How you load your vehicle affects vehicle handling and ride comfort, never load your vehicle with more weight than it was designed to carry.

When to Check

Check your tires once a month or more.

Downloaded from www.Manualslib.com manuals search engine

How to Check

Use a good quality pocket-type gage to check tire pressure. You cannot tell if your tires are properly inflated simply by looking at them. Radial tires may look properly inflated even when they are under-inflated. Check the tire's inflation pressure when the tires are cold. Cold means your vehicle has been sitting for at least three hours or driven no more than 1 mile (1.6 km).

Remove the valve cap from the tire valve stem. Press the tire gage firmly onto the valve to get a pressure measurement. If the cold tire inflation pressure matches the recommended pressure on the Tire and Loading Information label, no further adjustment is necessary. If the inflation pressure is low, add air until you reach the recommended amount.

If you overfill the tire, release air by pushing on the metal stem in the center of the tire valve. Re-check the tire pressure with the tire gage.

Be sure to put the valve caps back on the valve stems. They help prevent leaks by keeping out dirt and moisture.

Tire Inspection and Rotation

Tires should be rotated every 5,000 to 8,000 miles (8 000 to 13 000 km).

Any time you notice unusual wear, rotate your tires as soon as possible and check wheel alignment. Also check for damaged tires or wheels. See *When It Is Time for New Tires on page 295* and *Wheel Replacement on page 299* for more information.

The purpose of regular rotation is to achieve more uniform wear for all tires on the vehicle. The first rotation is the most important. See *Scheduled Maintenance on page 337*.

Downloaded from www.Manualslib.com manuals search engine

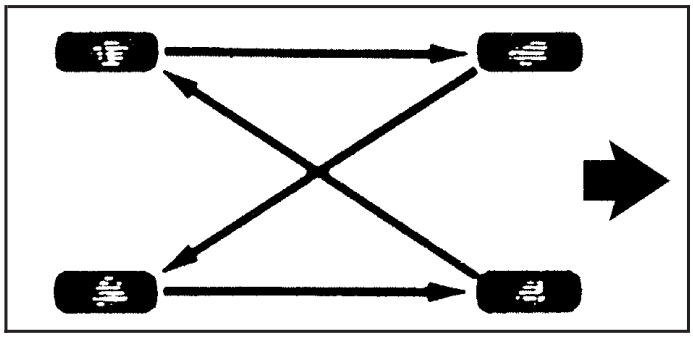

Non-Directional Tires

When rotating Goodyear Eagle RSA P245/45R18 non-directional tires, always use the correct rotation pattern shown here.

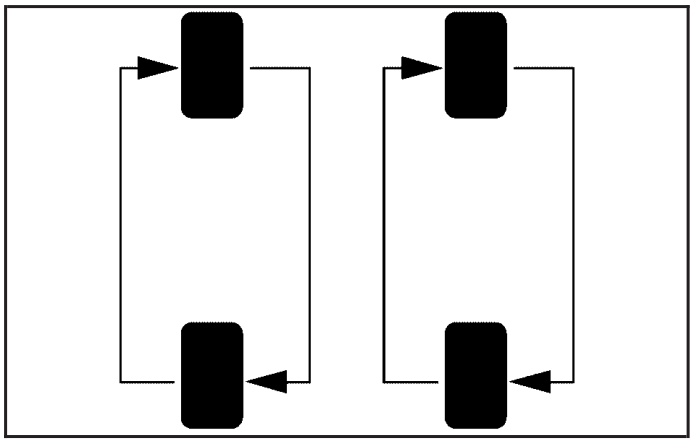

Directional Tires

If your vehicle has Goodyear Eagle F1-GS1 P245/45R18 size tires, they are directional tires and must roll in a certain direction for the best overall performance. The direction is shown by an arrow on the tire sidewall. Because these tires are directional, they should be rotated as shown here. These tires should only be moved from front to rear and rear to front on the same side of the vehicle.

Downloaded from www.Manualslib.com manuals search engine

After the tires have been rotated, adjust the front and rear inflation pressures as shown on the Tire and Loading Information label. See *Loading Your Vehicle on page 226* for an example of the Tire and Loading Information label and its location on your vehicle. Make certain that all wheel nuts are properly tightened. See “Wheel Nut Torque” under *Capacities and Specifications on page 332*.

⚠ CAUTION:

Rust or dirt on a wheel, or on the parts to which it is fastened, can make wheel nuts become loose after a time. The wheel could come off and cause a crash. When you change a wheel, remove any rust or dirt from places where the wheel attaches to the vehicle. In an emergency, you can use a cloth or a paper towel to do this; but be sure to use a scraper or wire brush later, if you need to, to get all the rust or dirt off.

When It Is Time for New Tires

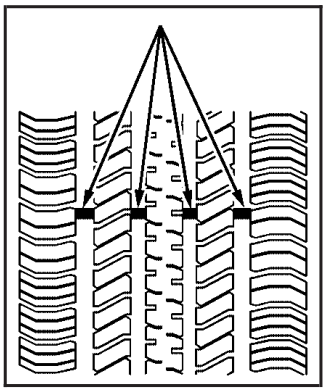

One way to tell when it is time for new tires is to check the treadwear indicators, which will appear when your tires have only 1/16 inch (1.6 mm) or less of tread remaining.

You need a new tire if any of the following statements are true:

- You can see the indicators at three or more places around the tire.
- You can see cord or fabric showing through the tire’s rubber.
- The tread or sidewall is cracked, cut, or snagged deep enough to show cord or fabric.
- The tire has a bump, bulge, or split.
- The tire has a puncture, cut, or other damage that cannot be repaired well because of the size or location of the damage.

Downloaded from www.Manualslib.com manuals search engine

Buying New Tires

GM has developed and matched specific tires for your vehicle. The original equipment tires installed on your vehicle, when it was new, were designed to meet General Motors Tire Performance Criteria Specification (TPC spec) system rating. If you need replacement tires, GM strongly recommends that you get tires with the same TPC Spec rating. This way, your vehicle will continue to have tires that are designed to give the same performance and vehicle safety, during normal use, as the original tires.

GM's exclusive TPC Spec system considers over a dozen critical specifications that impact the overall performance of your vehicle, including brake system performance, ride and handling, traction control, and tire pressure monitoring performance. GM's TPC Spec number is molded onto the tire's sidewall by the tire manufacturer. If the tires have an all-season tread design, the TPC spec number will be followed by a MS, for mud and snow. See *Tire Sidewall Labeling on page 286* for additional information.

⚠ CAUTION:

Mixing tires could cause you to lose control while driving. If you mix tires of different sizes, brands, or types (radial and bias-belted tires) the vehicle may not handle properly, and you could have a crash. Using tires of different sizes, brands, or types may also cause damage to your vehicle. Be sure to use the correct size, brand, and type of tires on your vehicle's wheels.

⚠ CAUTION:

If you use bias-ply tires on your vehicle, the wheel rim flanges could develop cracks after many miles of driving. A tire and/or wheel could fail suddenly, causing a crash. Use only radial-ply tires with the wheels on your vehicle.

Downloaded from www.Manualslib.com manuals search engine

If you must replace your vehicle's tires with those that do not have a TPC Spec number, make sure they are the same size, load range, speed rating, and construction type (radial and bias-belted tires) as your vehicle's original tires.

Your vehicle's original equipment tires are listed on the Tire and Loading Information label. This label is attached to the vehicle's center pillar (B-pillar). See *Loading Your Vehicle on page 226*, for more information about the Tire and Loading Information label.

Different Size Tires and Wheels

If you add wheels or tires that are a different size than your original equipment wheels and tires, this may affect the way your vehicle performs, including its braking, ride and handling characteristics, stability, and resistance to rollover. Additionally, if your vehicle has electronic systems such as, anti-lock brakes, traction control, and electronic stability control, the performance of these systems can be affected.

⚠ CAUTION:

If you add different sized wheels, your vehicle may not provide an acceptable level of performance and safety if tires not recommended for those wheels are selected. You may increase the chance that you will crash and suffer serious injury. Only use GM specific wheel and tire systems developed for your vehicle, and have them properly installed by a GM certified technician.

See *Buying New Tires on page 296* and *Accessories and Modifications on page 235* for additional information.

Downloaded from www.Manualslib.com manuals search engine

Uniform Tire Quality Grading

Quality grades can be found where applicable on the tire sidewall between tread shoulder and maximum section width. For example:

Treadwear 200 Traction AA Temperature A

The following information relates to the system developed by the United States National Highway Traffic Safety Administration (NHTSA), which grades tires by treadwear, traction, and temperature performance. This applies only to vehicles sold in the United States. The grades are molded on the sidewalls of most passenger car tires. The Uniform Tire Quality Grading (UTQG) system does not apply to deep tread, winter-type snow tires, space-saver, or temporary use spare tires, tires with nominal rim diameters of 10 to 12 inches (25 to 30 cm), or to some limited-production tires.

While the tires available on General Motors passenger cars and light trucks may vary with respect to these grades, they must also conform to federal safety requirements and additional General Motors Tire Performance Criteria (TPC) standards.

Treadwear

The treadwear grade is a comparative rating based on the wear rate of the tire when tested under controlled conditions on a specified government test course. For example, a tire graded 150 would wear one and a half (1.5) times as well on the government course as a tire graded 100. The relative performance of tires depends upon the actual conditions of their use, however, and may depart significantly from the norm due to variations in driving habits, service practices, and differences in road characteristics and climate.

Traction – AA, A, B, C

The traction grades, from highest to lowest, are AA, A, B, and C. Those grades represent the tire's ability to stop on wet pavement as measured under controlled conditions on specified government test surfaces of asphalt and concrete. A tire marked C may have poor traction performance.

Warning: The traction grade assigned to this tire is based on straight-ahead braking traction tests, and does not include acceleration, cornering, hydroplaning, or peak traction characteristics.

Downloaded from www.Manualslib.com manuals search engine

Temperature – A, B, C

The temperature grades are A (the highest), B, and C, representing the tire's resistance to the generation of heat and its ability to dissipate heat when tested under controlled conditions on a specified indoor laboratory test wheel. Sustained high temperature can cause the material of the tire to degenerate and reduce tire life, and excessive temperature can lead to sudden tire failure. The grade C corresponds to a level of performance which all passenger car tires must meet under the Federal Motor Vehicle Safety Standard No. 109. Grades B and A represent higher levels of performance on the laboratory test wheel than the minimum required by law.

Warning: The temperature grade for this tire is established for a tire that is properly inflated and not overloaded. Excessive speed, underinflation, or excessive loading, either separately or in combination, can cause heat buildup and possible tire failure.

Wheel Alignment and Tire Balance

The tires and wheels on your vehicle were aligned and balanced carefully at the factory to give you the longest tire life and best overall performance. Adjustments to wheel alignment and tire balancing will not be necessary on a regular basis. However, if you notice unusual tire wear or your vehicle pulling to one side or the other, the alignment may need to be checked. If you notice your vehicle vibrating when driving on a smooth road, your tires and wheels may need to be rebalanced. See your dealer for proper diagnosis.

Wheel Replacement

Replace any wheel that is bent, cracked, or badly rusted or corroded. If wheel nuts keep coming loose, the wheel, wheel bolts and wheel nuts should be replaced. If the wheel leaks air, replace it (except some aluminum wheels, which can sometimes be repaired). See your dealer if any of these conditions exist.

Downloaded from www.Manualslib.com manuals search engine

Your dealer will know the kind of wheel you need.

Each new wheel should have the same load-carrying capacity, diameter, width, offset and be mounted the same way as the one it replaces.

If you need to replace any of your wheels, wheel bolts or wheel nuts, replace them only with new GM original equipment parts. This way, you will be sure to have the right wheel, wheel bolts and wheel nuts for your vehicle.

⚠ CAUTION:

Using the wrong replacement wheels, wheel bolts, or wheel nuts on your vehicle can be dangerous. It could affect the braking and handling of your vehicle, make your tires lose air and make you lose control. You could have a collision in which you or others could be injured. Always use the correct wheel, wheel bolts, and wheel nuts for replacement.

Notice: **The wrong wheel can also cause problems with bearing life, brake cooling, speedometer or odometer calibration, headlamp aim, bumper height, vehicle ground clearance, and tire clearance to the body and chassis.**

⚠ CAUTION:

Rust or dirt on a wheel, or on the parts to which it is fastened, can make wheel nuts become loose after a time. The wheel could come off and cause a crash. When you change a wheel, remove any rust or dirt from places where the wheel attaches to the vehicle. In an emergency, you can use a cloth or a paper towel to do this; but be sure to use a scraper or wire brush later, if you need to, to get all the rust or dirt off.

Downloaded from www.Manualslib.com manuals search engine

⚠ CAUTION:

Never use oil or grease on studs or the threads of the wheel nuts. If you do, the wheel nuts might come loose and the wheel could fall off, causing a crash.

⚠ CAUTION:

Incorrect wheel nuts or improperly tightened wheel nuts can cause the wheel to become loose and even come off. This could lead to a crash. Be sure to use the correct wheel nuts. If you have to replace them, be sure to get new GM original equipment wheel nuts.

Notice: **Improperly tightened wheel nuts can lead to brake pulsation and rotor damage. To avoid expensive brake repairs, evenly tighten the wheel nuts in the proper sequence and to the proper torque specification.**

Used Replacement Wheels

⚠ CAUTION:

Putting a used wheel on your vehicle is dangerous. You cannot know how it has been used or how far it has been driven. It could fail suddenly and cause a crash. If you have to replace a wheel, use a new GM original equipment wheel.

Downloaded from www.Manualslib.com manuals search engine

Tire Chains

⚠ CAUTION:

Do not use tire chains. There is not enough clearance. Tire chains used on a vehicle without the proper amount of clearance can cause damage to the brakes, suspension, or other vehicle parts. The area damaged by the tire chains could cause you to lose control of your vehicle and you or others may be injured in a crash. Use another type of traction device only if its manufacturer recommends it for use on your vehicle and tire size combination and road conditions. Follow that manufacturer's instructions. To help avoid damage to your vehicle, drive slowly, re-adjust or remove the device if it is contacting your vehicle, and do not spin your wheels. If you do find traction devices that will fit, install them on the rear tires.

If a Tire Goes Flat

Your vehicle has a tire inflator kit. There is no spare tire, no tire changing equipment, and no place to store a tire.

It is unusual for a tire to blow out while you are driving, especially if you maintain your tires properly. See *Tires on page 284*. If air goes out of a tire, it is much more likely to leak out slowly. But, if you should ever have a blow out, here are a few tips about what to expect and what to do:

If a front tire fails, the flat tire will create a drag that pulls the vehicle toward that side. Take your foot off the accelerator pedal and grip the steering wheel firmly. Steer to maintain lane position, and then gently brake to a stop well out of the traffic lane.

A rear blow out, particularly on a curve, acts much like a skid and may require the same correction you would use in a skid. In any rear blow out, remove your foot from the accelerator pedal. Get the vehicle under control by steering the way you want the vehicle to go. It may be very bumpy and noisy, but you can still steer. Gently brake to a stop, well off the road if possible.

Downloaded from www.Manualslib.com manuals search engine

If a tire goes flat, avoid further tire and wheel damage by driving slowly to a level place and stopping. Then do this:

1. Turn on the hazard warning flashers. See *Hazard Warning Flashers on page 110*.
2. Park your vehicle. If your vehicle has an automatic transmission, set the parking brake firmly and put the shift lever in PARK (P). See *Shifting Into Park (P) (Automatic Transmission) on page 87*. If your vehicle has a manual transmission, move the shift lever to REVERSE (R) and set the parking brake firmly. See *Parking Your Vehicle (Manual Transmission) on page 89* for additional information.
3. Turn off the engine.
4. Inspect the flat tire.

If the tire has been separated from the wheel or has damaged sidewalls or large tears that allow rapid air loss, call a tire repair facility. See *Roadside Assistance Program on page 368*.

If the flat tire is due to a slow leak caused by a nail or other similar road hazard, the tire inflator kit may be used to repair the damaged tire temporarily. The kit uses a liquid tire sealant to seal small punctures in the tread area of the tire.

After repairing a tire with the tire inflator kit, take your vehicle to an authorized GM dealer to have the tire inspected and repaired as soon as possible. The tire sealant is a temporary repair only. See *Tire Inflator Kit on page 303*.

Tire Inflator Kit

Your vehicle has a tire inflator kit. There is no jack or spare tire. The kit uses a liquid tire sealant and air at the same time to seal small punctures in the tread area of the tire. Be sure to read and follow all of the tire inflator kit instructions.

Downloaded from www.Manualslib.com manuals search engine

The kit includes the following:

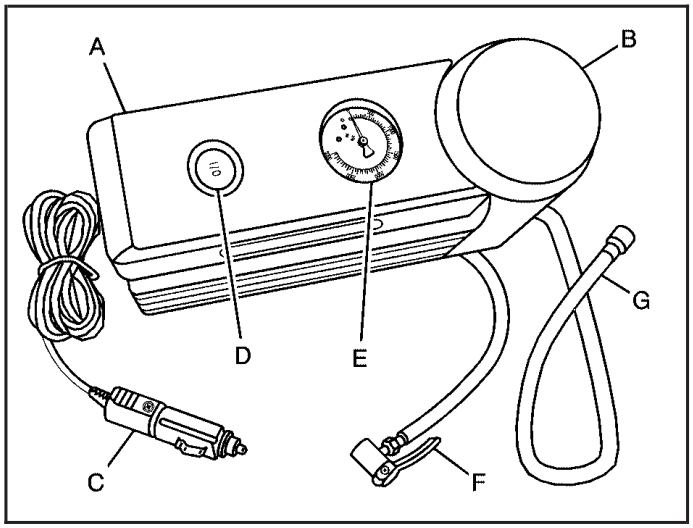

A. Air Compressor
B. Tire Sealant Canister
C. Air Compressor Accessory Plug
D. On/Off Switch
E. Air Pressure Gage
F. Air Compressor Inflator Hose
G. Sealant Filling Hose

If the flat tire is due to a slow leak caused by a nail or other similar road hazard, the tire inflator kit can be used to temporarily repair the damaged tire.

After temporarily repairing the tire with the inflator kit, it is recommended to take your vehicle to a dealer within 100 miles (161 kilometers) of driving to have the tire inspected and repaired. If the sealant is not removed from the tire within 100 miles (161 kilometers) of driving, it is more likely that the tire can get damaged and have to be replaced.

Downloaded from www.Manualslib.com manuals search engine

Accessing the Tire Inflator Kit

To access the tire inflator kit, do the following:

1. Make sure the convertible top is in the up position before accessing the tire inflator kit.
2. Open the trunk. See *Trunk on page 68* for more information.

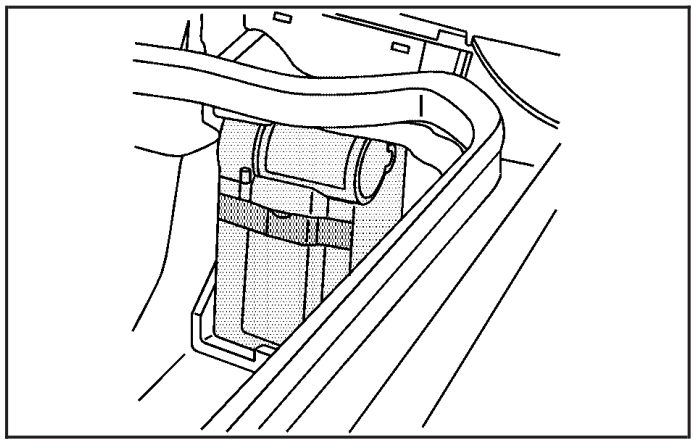

3. Locate the tire inflator kit on the driver's side of the vehicle, near the back corner of the trunk.

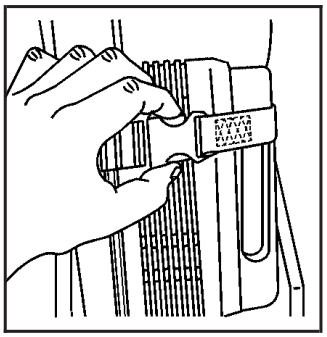

4. Remove the tire inflator kit strap by squeezing the two tabs of the quick release buckle.
5. Remove the inflator kit from its foam container.

Downloaded from www.Manualslib.com manuals search engine

Tire Sealant

The kit contains a liquid sealant that when injected into a flat tire, can temporarily repair nail holes or cuts in the tread area of the tire. The tire sealant cannot repair tire damage caused while driving on a flat tire or a tire that has had a “blow out” or a tire that has punctures in the sidewall areas. The tire sealant solution is to be used for a single tire and can only be used once.

Check the tire sealant expiration date on the sealant canister. The sealant might not be as effective beyond the expiration date. If needed, see your dealer for a replacement canister.

Using the Tire Inflator Kit

To use the tire inflator kit, do the following:

1. Place the inflator kit on the ground and unwrap the sealant filling hose from the compressor.
2. Remove the air compressor accessory plug from the unit. To do this, pull the top portion of the wrapped cord out first, then the bottom, and then unsnap the plug. Do not insert the plug into an accessory outlet yet.
3. Remove the valve stem cap from the flat tire by turning it counterclockwise.

   If an object, such as a nail, has penetrated the tire, do not remove it.

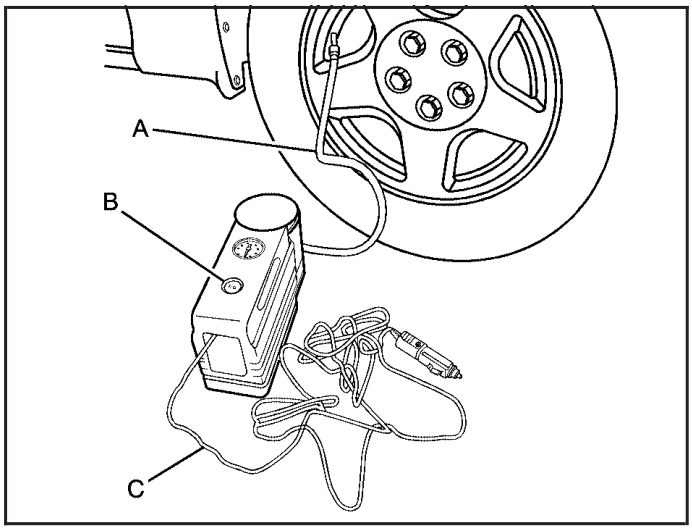

4. Attach the sealant filling hose (A) onto the tire valve stem. Turn it clockwise until it is tight.

   Make sure the inflator kit on/off switch (B) is in the O (off) position.

Downloaded from www.Manualslib.com manuals search engine

5. Plug the air compressor accessory plug (C) into an accessory power outlet in the vehicle. See *Accessory Power Outlet(s) on page 121* for more information.

⚠ CAUTION:

Idling the engine in a closed-in place or with the climate control system off can cause deadly carbon monoxide (CO). See *Engine Exhaust on page 91*.

6. Start the vehicle. See *Starting the Engine on page 80* for more information. The vehicle must be running while using the air compressor.

⚠ CAUTION:

Inflating something too much can make it explode, and you or others could be injured. Be sure to read the inflator instructions, and inflate the tire to its recommended pressure. Do not exceed 36 psi (248 kPa).

7. Move the inflator kit switch to the I (on) position.

   The inflator kit forces sealant and air into the tire. Sealant might leak from the puncture hole until the vehicle is driven and the hole has sealed.

8. Make sure there is a proper connection between the tire valve stem and the sealant filling hose by looking at the air pressure gage. If there is not a pressure reading while the compressor is running, the connection between the inflator kit and the tire is bad.

   Check the attachment between the sealant filling hose and the tire valve stem.

Downloaded from www.Manualslib.com manuals search engine

9. Inflate the tire up to the recommended inflation pressure, found on the Tire and Loading Information label located on the vehicle's center pillar (B-pillar) below the vehicle's door latch, using the air pressure gage on the top of the unit.

   The pressure gage reading is slightly high while the compressor is on. Turn the compressor off to get an accurate pressure reading.

Notice: **If the recommended pressure cannot be reached after 15 minutes, the vehicle should not be driven farther. Damage to the tire is severe and the sealant will not be effective. Remove the air compressor plug from the accessory power outlet and unscrew the inflating hose from the tire valve. See *Roadside Assistance Program on page 368*.**

10. Move the inflator kit switch to the O (off) position once the correct tire pressure is obtained.
11. Turn off the engine.
12. Unplug the air compressor accessory plug from the accessory power outlet in the vehicle.
13. Disconnect the sealant filling hose from the tire valve stem, by turning it counterclockwise, and replace the tire valve stem cap.

    Be careful when handling the tire inflator components as they could be hot after usage.
14. Wrap the sealant filling hose around the air compressor channel to stow it in its original location.
15. Stow the air compressor accessory plug back in the air compressor. To do this, wrap the air compressor accessory plug, snap in the plug, and then push in the bottom and then the top of the wrapped air compressor accessory plug.

Downloaded from www.Manualslib.com manuals search engine

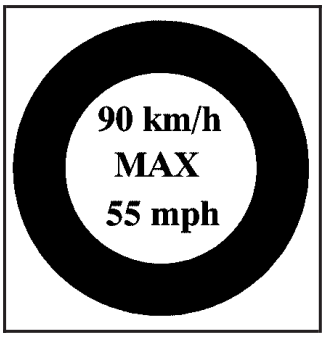

16. If the flat tire was able to inflate to the recommended inflation pressure, remove the maximum speed label from the sealant canister.

Place it in a highly visible location such as the inside of the upper left corner of the windshield or to the face of the radio/clock.

The maximum speed label reminds you to drive cautiously and not to exceed 55 mph (90 km/h) until you have the damaged tire inspected and repaired.

⚠ CAUTION:

Storing the tire inflator kit or other equipment in the passenger compartment of the vehicle could cause injury. In a sudden stop or collision, loose equipment could strike someone. Store the tire inflator kit in the proper place.

17. Return the equipment to the proper storage location in the trunk of your vehicle. You may need to loosen the retention strap to wrap it around the inflator kit and foam container. To do this, pull apart the strap and loosen the strap at the quick release buckle. Then snap the buckle together, pull the strap tight, and secure the loose end of the strap by mating the ends.

Downloaded from www.Manualslib.com manuals search engine

18. Immediately drive the vehicle 5 miles (8 km) to distribute the sealant evenly in the tire. Stop at a safe location and check the tire pressure, refer to Steps 1 through 8 under "Using the Air Compressor without Sealant" next in this section. If the tire pressure has fallen more then 10 psi (68 kPa), below the recommended inflation pressure, stop driving the vehicle. The tire is too damaged for the sealant to work. See *Roadside Assistance Program on page 368*.

    If the tire pressure has not dropped more than 10 psi (68 kPa) from the recommended inflation pressure, you can inflate the tire back up to the recommended inflation pressure.

19. Dispose of the sealant canister at a local dealer or in accordance with your local state codes and practices.

    After using the sealant canister, replace it with a new canister from a dealer.

20. After temporarily repairing a tire with the emergency flat tire repair kit, take your vehicle to a dealer to have the tire inspected and repaired.

Using the Air Compressor without Sealant

To use the air compressor by itself to inflate a tire, do the following:

1. Remove the air compressor accessory plug from the air compressor.

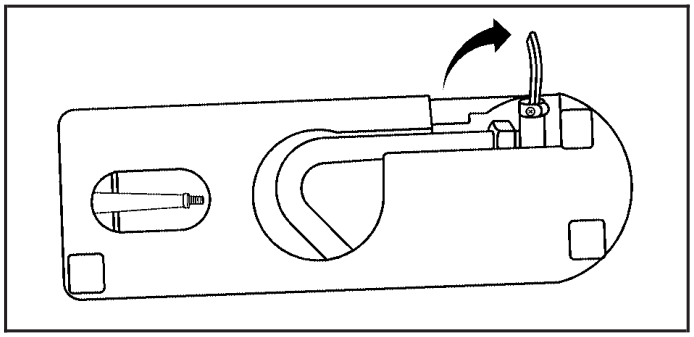

2. Unlock the air compressor hose from the sealant canister by pulling up on the lever.
3. Pull the air compressor inflator hose from the sealant canister.

Downloaded from www.Manualslib.com manuals search engine

4. Push the air compressor inflator hose onto the tire valve stem and push the lever down to secure in place.
5. Plug the air compressor accessory plug into an accessory power outlet in the vehicle. See *Accessory Power Outlet(s) on page 121* for more information.

⚠ CAUTION:

Idling the engine in a closed-in place or with the climate control system off can cause deadly carbon monoxide (CO). See *Engine Exhaust on page 91*.

6. Start the vehicle. See *Starting the Engine on page 80* for more information. The vehicle must be running while using the air compressor.

⚠ CAUTION:

Inflating something too much can make it explode, and you or others could be injured. Be sure to read the inflator instructions, and inflate the tire to its recommended pressure. Do not exceed 36 psi (248 kPa).

7. Move the inflator kit switch to the I (on) position.
8. Make sure there is a proper connection between the tire valve stem and the air compressor hose by looking at the air pressure gage. If there is not a pressure reading while the compressor is running, the connection between the inflator kit and the tire is bad.

   Check the attachment between the air compressor hose and the tire valve stem.

Downloaded from www.Manualslib.com manuals search engine

9. Inflate the tire up to the recommended inflation pressure using the air pressure gage on the top of the unit.
10. Turn off the air compressor by moving the switch to the O (off) position.

⚠ CAUTION:

Storing the tire inflator kit or other equipment in the passenger compartment of the vehicle could cause injury. In a sudden stop or collision, loose equipment could strike someone. Store the tire inflator kit in the proper place.

11. Disconnect the compressor inflator hose and wrap the hose in the bottom of the inflator kit.
12. Place the equipment in the original location in the trunk of your vehicle.

Removal and Installation of the Sealant Canister

To remove the sealant canister, do the following:

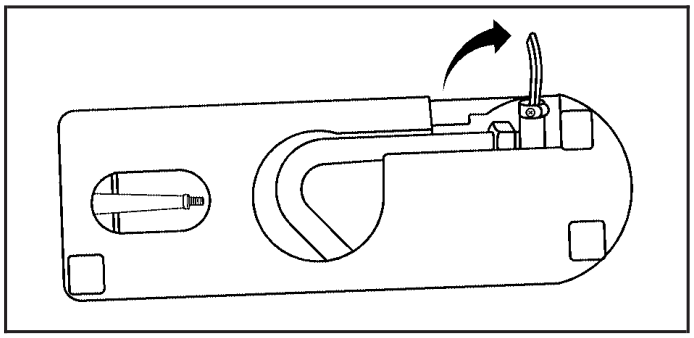

1. Unlock the air compressor inflator hose from the sealant canister by pulling the lever up.
2. Disconnect the air compressor inflator hose from the sealant canister.
3. Unwrap the sealant filling hose from the compressor.

Downloaded from www.Manualslib.com manuals search engine

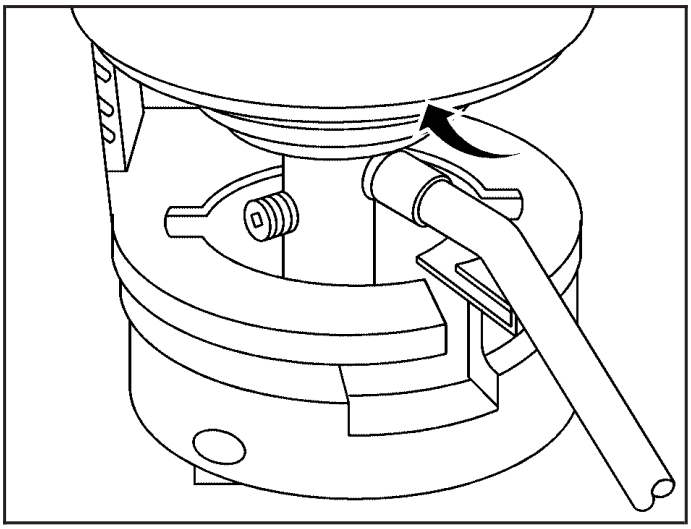

4. Turn the sealant canister so the inflator filling hose is aligned with the slot in the compressor.
5. Lift the sealant canister from the compressor and replace with a new sealant canister. See your dealer for more information.

To install a new sealant canister, do the following:

1. Align the sealant filling hose with the slot in the air compressor.
2. Push the sealant canister down and turn it clockwise.
3. Wrap the sealant filling hose around the air compressor channel to stow it in its original location.
4. Push the air compressor inflator hose onto the sealant canister inlet and push the lever down.

Downloaded from www.Manualslib.com manuals search engine

Appearance Care

Cleaning the Inside of Your Vehicle

Your vehicle's interior will continue to look its best if it is cleaned often. Although not always visible, dust and dirt can accumulate on your upholstery. Dirt can damage carpet, fabric, leather, and plastic surfaces. Regular vacuuming is recommended to remove particles from your upholstery. It is important to keep your upholstery from becoming and remaining heavily soiled. Soils should be removed as quickly as possible. Your vehicle's interior may experience extremes of heat that could cause stains to set rapidly.

Lighter colored interiors may require more frequent cleaning. Use care because newspapers and garments that transfer color to your home furnishings may also transfer color to your vehicle's interior.

When cleaning your vehicle's interior, only use cleaners specifically designed for the surfaces being cleaned. Permanent damage may result from using cleaners on surfaces for which they were not intended. Use glass cleaner only on glass. Remove any accidental over-spray from other surfaces immediately. To prevent over-spray, apply cleaner directly to the cleaning cloth.

Notice: **If you use abrasive cleaners when cleaning glass surfaces on your vehicle, you could scratch the glass and/or cause damage to the rear window defogger. When cleaning the glass on your vehicle, use only a soft cloth and glass cleaner.**

Many cleaners contain solvents that may become concentrated in your vehicle's breathing space. Before using cleaners, read and adhere to all safety instructions on the label. While cleaning your vehicle's interior, maintain adequate ventilation by opening your vehicle's doors and windows.

Dust may be removed from small buttons and knobs using a small brush with soft bristles.

Your dealer has a product for cleaning your vehicle's glass. Should it become necessary, you can also obtain a product from your dealer to remove odors from your vehicle's upholstery.

Downloaded from www.Manualslib.com manuals search engine

Do not clean your vehicle using the following cleaners or techniques:

- Never use a knife or any other sharp object to remove a soil from any interior surface.
- Never use a stiff brush. It can cause damage to your vehicle's interior surfaces.
- Never apply heavy pressure or rub aggressively with a cleaning cloth. Use of heavy pressure can damage your interior and does not improve the effectiveness of soil removal.
- Use only mild, neutral-pH soaps. Avoid laundry detergents or dishwashing soaps with degreasers. Using too much soap will leave a residue that leaves streaks and attracts dirt. For liquid cleaners, about 20 drops per gallon (3.78 L) of water is a good guide.
- Do not heavily saturate your upholstery while cleaning.
- Damage to your vehicle's interior may result from the use of many organic solvents such as naptha, alcohol, etc.

Fabric/Carpet

Use a vacuum cleaner with a soft brush attachment frequently to remove dust and loose dirt. A canister vacuum with a beater bar in the nozzle may only be used on floor carpet and carpeted floor mats. For soils, always try to remove them first with plain water or club soda. Before cleaning, gently remove as much of the soil as possible using one of the following techniques:

- For liquids: gently blot the remaining soil with a paper towel. Allow the soil to absorb into the paper towel until no more can be removed.
- For solid dry soils: remove as much as possible and then vacuum.

To clean, use the following instructions:

1. Saturate a lint-free, clean white cloth with water or club soda.
2. Wring the cloth to remove excess moisture.

Downloaded from www.Manualslib.com manuals search engine

3. Start on the outside edge of the soil and gently rub toward the center. Continue cleaning, using a clean area of the cloth each time it becomes soiled.
4. Continue to gently rub the soiled area until the cleaning cloth remains clean.
5. If the soil is not completely removed, use a mild soap solution and repeat the cleaning process that was used with plain water.

If any of the soil remains, a commercial fabric cleaner or spot lifter may be necessary. When a commercial upholstery cleaner or spot lifter is to be used, test a small hidden area for colorfastness first. If the locally cleaned area gives any impression that a ring formation may result, clean the entire surface.

After the cleaning process has been completed, a paper towel can be used to blot excess moisture from the fabric or carpet.

Leather

A soft cloth dampened with water may be used to remove dust. If a more thorough cleaning is necessary, a soft cloth dampened with a mild soap solution can be used. Allow the leather to dry naturally. Do not use heat to dry. Never use steam to clean leather. Never use spot lifters or spot removers on leather. Many commercial leather cleaners and coatings that are sold to preserve and protect leather may permanently change the appearance and feel of your leather and are not recommended. Do not use silicone or wax-based products, or those containing organic solvents to clean your vehicle's interior because they can alter the appearance by increasing the gloss in a non-uniform manner. Never use shoe polish on your leather.

Downloaded from www.Manualslib.com manuals search engine

Instrument Panel, Vinyl, and Other Plastic Surfaces

A soft cloth dampened with water may be used to remove dust. If a more thorough cleaning is necessary, a clean soft cloth dampened with a mild soap solution can be used to gently remove dust and dirt. Never use spot lifters or removers on plastic surfaces. Many commercial cleaners and coatings that are sold to preserve and protect soft plastic surfaces may permanently change the appearance and feel of your interior and are not recommended. Do not use silicone or wax-based products, or those containing organic solvents to clean your vehicle's interior because they can alter the appearance by increasing the gloss in a non-uniform manner.

Some commercial products may increase gloss on your instrument panel. The increase in gloss may cause annoying reflections in the windshield and even make it difficult to see through the windshield under certain conditions.

Care of Safety Belts

Keep belts clean and dry.

⚠ CAUTION:

Do not bleach or dye safety belts. If you do, it may severely weaken them. In a crash, they might not be able to provide adequate protection. Clean safety belts only with mild soap and lukewarm water.

Weatherstrips

Silicone grease on weatherstrips will make them last longer, seal better, and not stick or squeak. Apply silicone grease with a clean cloth. During very cold, damp weather frequent application may be required. See *Part D: Recommended Fluids and Lubricants on page 353*.

Downloaded from www.Manualslib.com manuals search engine

Washing Your Vehicle

The paint finish on the vehicle provides beauty, depth of color, gloss retention, and durability.

The best way to preserve the vehicle's finish is to keep it clean by washing it often with lukewarm or cold water.

Do not wash the vehicle in the direct rays of the sun. Use a car washing soap. Do not use strong soaps or chemical detergents. Be sure to rinse the vehicle well, removing all soap residue completely. Approved cleaning products can be obtained from your dealer.

See *Vehicle Care/Appearance Materials on page 324*. Do not use cleaning agents that are petroleum based, or that contain acid or abrasives. All cleaning agents should be flushed promptly and not allowed to dry on the surface, or they could stain. Dry the finish with a soft, clean chamois or an all-cotton towel to avoid surface scratches and water spotting.

High pressure car washes may cause water to enter the vehicle.

Cleaning Exterior Lamps/Lenses

Use only lukewarm or cold water, a soft cloth and a car washing soap to clean exterior lamps and lenses. Follow instructions under *Washing Your Vehicle on page 318*.

Downloaded from www.Manualslib.com manuals search engine

Finish Care

Occasional waxing or mild polishing of the vehicle by hand may be necessary to remove residue from the paint finish. Approved cleaning products can be obtained from your dealer. See *Vehicle Care/Appearance Materials on page 324*.

Notice: **Machine compounding or aggressive polishing on a basecoat/clearcoat paint finish may damage it. Use only non-abrasive waxes and polishes that are made for a basecoat/clearcoat paint finish on your vehicle.**

The vehicle has a basecoat/clearcoat paint finish. The clearcoat gives more depth and gloss to the colored basecoat. Always use waxes and polishes that are non-abrasive and made for a basecoat/clearcoat paint finish.

Foreign materials such as calcium chloride and other salts, ice melting agents, road oil and tar, tree sap, bird droppings, chemicals from industrial chimneys, etc., can damage the vehicle's finish if they remain on painted surfaces. Wash the vehicle as soon as possible. If necessary, use non-abrasive cleaners that are marked safe for painted surfaces to remove foreign matter.

Exterior painted surfaces are subject to aging, weather, and chemical fallout that can take their toll over a period of years. To help keep the paint finish looking new, keep the vehicle in a garage or covered whenever possible.

Downloaded from www.Manualslib.com manuals search engine

Windshield and Wiper Blades

If the windshield is not clear after using the windshield washer, or if the wiper blade chatters when running, wax, sap, or other material may be on the blade or windshield.

Clean the outside of the windshield with a glass cleaning liquid or powder and water solution. The windshield is clean if beads do not form when it is rinsed with water.

Grime from the windshield will stick to the wiper blades and affect their performance. Clean the blade by wiping vigorously with a cloth soaked in full-strength windshield washer solvent. Then rinse the blade with water.

Check the wiper blades and clean them as necessary; replace blades that look worn.

Convertible Top

The vehicle's convertible top should be cleaned often. However, high pressure car washes may cause water to enter your vehicle.

When you hand wash the top, do it in partial shade. Use a mild soap, lukewarm water and a soft sponge. A chamois or cloth may leave lint on the top, and a brush can chafe the threads in the top fabric. Do not use detergents, harsh cleaners, solvents or bleaching agents.

Wet the entire vehicle and wash the top evenly to avoid spots or rings. Let the soap remain on the fabric for a few minutes. When the top is really dirty, use a mild foam-type cleaner. Thoroughly rinse the entire vehicle, then let the top dry in direct sunlight.

To protect the convertible top:

- After you wash the vehicle, make sure the top is completely dry before you lower it.
- Do not get any cleaner on the vehicle's painted finish; it could leave streaks.
- If you decide to go through an automatic car wash, ask the manager if the equipment could damage your top.

Downloaded from www.Manualslib.com manuals search engine

Aluminum or Chrome-Plated Wheels

Your vehicle may have either aluminum or chrome-plated wheels.

Keep the wheels clean using a soft clean cloth with mild soap and water. Rinse with clean water. After rinsing thoroughly, dry with a soft clean towel. A wax may then be applied.

Notice: **If you use strong soaps, chemicals, abrasive polishes, cleaners, brushes, or cleaners that contain acid on aluminum or chrome-plated wheels, you could damage the surface of the wheel(s). The repairs would not be covered by your warranty. Use only GM-approved cleaners on aluminum or chrome-plated wheels.**

The surface of these wheels is similar to the painted surface of your vehicle. Do not use strong soaps, chemicals, abrasive polishes, abrasive cleaners, cleaners with acid, or abrasive cleaning brushes on them because you could damage the surface. Do not use chrome polish on aluminum wheels.

Notice: **Using chrome polish on aluminum wheels could damage the wheels. The repairs would not be covered by your warranty. Use chrome polish on chrome wheels only.**

Use chrome polish only on chrome-plated wheels, but avoid any painted surface of the wheel, and buff off immediately after application.

Notice: **If you drive your vehicle through an automatic car wash that has silicone carbide tire cleaning brushes, you could damage the aluminum or chrome-plated wheels. The repairs would not be covered by your warranty. Never drive a vehicle equipped with aluminum or chrome-plated wheels through an automatic car wash that uses silicone carbide tire cleaning brushes.**

Do not take your vehicle through an automatic car wash that has silicone carbide tire cleaning brushes. These brushes can also damage the surface of these wheels.

Downloaded from www.Manualslib.com manuals search engine

Tires

To clean the tires, use a stiff brush with tire cleaner.

Notice: **Using petroleum-based tire dressing products on your vehicle may damage the paint finish and/or tires. When applying a tire dressing, always wipe off any overspray from all painted surfaces on your vehicle.**

Sheet Metal Damage

If the vehicle is damaged and requires sheet metal repair or replacement, make sure the body repair shop applies anti-corrosion material to parts repaired or replaced to restore corrosion protection.

Original manufacturer replacement parts will provide the corrosion protection while maintaining the warranty.

Finish Damage

Any stone chips, fractures or deep scratches in the finish should be repaired right away. Bare metal will corrode quickly and may develop into major repair expense.

Minor chips and scratches can be repaired with touch-up materials available from your dealer. Larger areas of finish damage can be corrected in your dealer's body and paint shop.

Downloaded from www.Manualslib.com manuals search engine

Underbody Maintenance

Chemicals used for ice and snow removal and dust control can collect on the underbody. If these are not removed, corrosion and rust can develop on the underbody parts such as fuel lines, frame, floor pan, and exhaust system even though they have corrosion protection.

At least every spring, flush these materials from the underbody with plain water. Clean any areas where mud and debris can collect. Dirt packed in close areas of the frame should be loosened before being flushed. Your dealer or an underbody car washing system can do this for you.

Chemical Paint Spotting

Some weather and atmospheric conditions can create a chemical fallout. Airborne pollutants can fall upon and attack painted surfaces on the vehicle. This damage can take two forms: blotchy, ring-shaped discolorations, and small, irregular dark spots etched into the paint surface.

Although no defect in the paint job causes this, GM will repair, at no charge to the owner, the surfaces of new vehicles damaged by this fallout condition within 12 months or 12,000 miles (20 000 km) of purchase, whichever occurs first.

Downloaded from www.Manualslib.com manuals search engine

Vehicle Care/Appearance Materials

Description	Usage
Polishing Cloth Wax-Treated	Interior and exterior polishing cloth.
Tar and Road Oil Remover	Removes tar, road oil and asphalt.
Chrome Cleaner and Polish	Use on chrome or stainless steel.
Vinyl Cleaner	Cleans vinyl.
Glass Cleaner	Removes dirt, grime, smoke and fingerprints.
Chrome and Wire Wheel Cleaner	Removes dirt and grime from chrome wheels and wire wheel covers.
Finish Enhancer	Removes dust, fingerprints, and surface contaminants. Spray on wipe off.

Description	Usage
Swirl Remover Polish	Removes swirl marks, fine scratches and other light surface contamination.
Cleaner Wax	Removes light scratches and protects finish.
Foaming Tire Shine Low Gloss	Cleans, shines and protects in one easy step, no wiping necessary.
Wash Wax Concentrate	Medium foaming shampoo. Cleans and lightly waxes. Biodegradable and phosphate free.
Spot Lifter	Quickly and easily removes spots and stains from carpets, vinyl and cloth upholstery.
Odor Eliminator	Odorless spray odor eliminator used on fabrics, vinyl, leather and carpet.

Downloaded from www.Manualslib.com manuals search engine

Vehicle Identification

Vehicle Identification Number (VIN)

This is the legal identifier for your vehicle. It appears on a plate in the front corner of the instrument panel, on the driver's side. You can see it if you look through the windshield from outside your vehicle. The VIN also appears on the Vehicle Certification and Service Parts labels and the certificates of title and registration.

Engine Identification

The eighth character in the VIN is the engine code. This code will help you identify your vehicle's engine, specifications, and replacement parts.

Service Parts Identification Label

You will find this label on the inside of the glove box. It is very helpful if you ever need to order parts. On this label, you will find the following:

- VIN
- Model designation
- Paint information
- Production options and special equipment

Do not remove this label from the vehicle.

Downloaded from www.Manualslib.com manuals search engine

Electrical System

Add-On Electrical Equipment

Notice: **Do not add anything electrical to your vehicle unless you check with your dealer first. Some electrical equipment can damage your vehicle and the damage would not be covered by your warranty. Some add-on electrical equipment can keep other components from working as they should.**

Add-on equipment can drain your vehicle's battery, even if your vehicle is not operating.

Your vehicle has an airbag system. Before attempting to add anything electrical to your vehicle, see *Servicing Your Airbag-Equipped Vehicle on page 54*.

Headlamp Wiring

The headlamp wiring is protected by fuses. An electrical overload will cause the lamps to remain off. If this happens, have your headlamp wiring checked right away.

Power Windows and Other Power Options

Circuit breakers protect the power windows and other power accessories. When the current load is too heavy, the circuit breaker opens and closes, protecting the circuit until the problem is fixed or goes away.

Fuses and Circuit Breakers

The wiring circuits in your vehicle are protected from short circuits by a combination of J-Case fuses, mini-fuses and circuit breakers. This greatly reduces the chance of fires caused by electrical problems.

Downloaded from www.Manualslib.com manuals search engine

Look at the silver-colored band inside the fuse. If the band is broken or melted, replace the fuse. Be sure you replace a bad fuse with a new one of the identical size and rating.

If you ever have a problem on the road and do not have a spare fuse, you can borrow one that has the same amperage. Just pick some feature of your vehicle that you can get along without — like the radio or cigarette lighter — and use its fuse, if it is the correct amperage. Replace it as soon as you can.

Floor Console Fuse Block

The floor console fuse block is located on the passenger's side of the vehicle under the carpet.

Remove the fuse block cover to access the fuses. Use the fuse puller to remove fuses.

After re-installing the fuse block cover, be sure to tuck the carpet under the heater floor outlets.

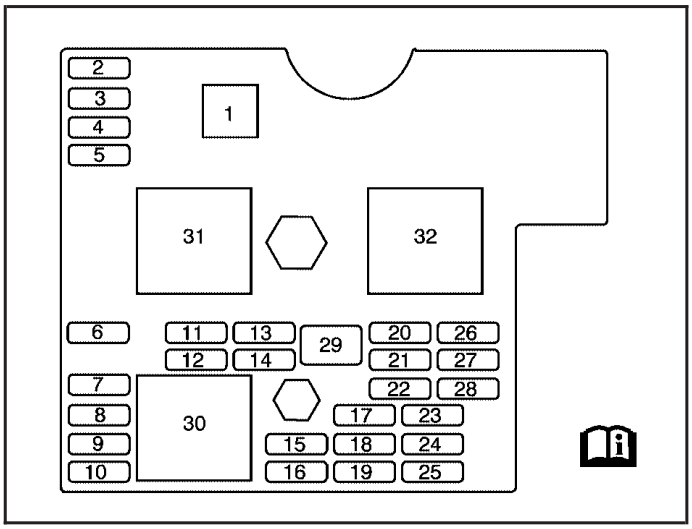

Fuses	Usage
1	Fuse Puller
2	Empty
3	Empty
4	Empty
5	Empty

Downloaded from www.Manualslib.com manuals search engine

Fuses	Usage
6	Amplifier
7	Cluster
8	Ignition Switch, PassKey III+
9	Stoplamp
10	Climate Control System, PassKey III+
11	Empty
12	Spare
13	Airbag
14	Spare
15	Wiper
16	Climate Control System, Automatic Occupant Sensing Module, Clutch Switch, Crank Relay, Instrument Panel Cluster
17	Empty
18	Empty

Fuses	Usage
19	Electric Power Steering, Steering Wheel Controls
20	Spare
21	Spare
22	Empty
23	Radio
24	Sensing and Diagnostic Module
25	Engine Control Module, Transmission Control Module
26	Door Locks
27	Interior Lamps
28	Steering Wheel Control Backlighting
29	Power Windows
30	Climate Control System
31	Empty
32	Retained Accessory Power

Downloaded from www.Manualslib.com manuals search engine

Underhood Fuse Block

The underhood fuse block is located in the engine compartment on the passenger's side of the vehicle.

Lift the cover for access to the fuse block.

To remove fuses, use the fuse puller, or hold the end of the fuse between your thumb and index finger and pull straight out.

See *Engine Compartment Overview on page 244* for more information on location.

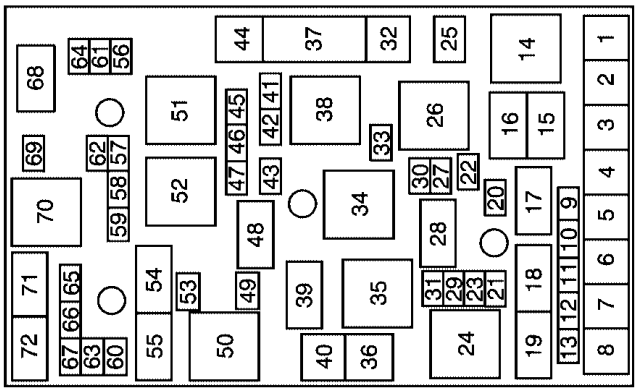

Fuses	Usage
1	Empty (LE5); Cooling Fan (LNF)
2	Rear Window Defogger
3	Empty
4	Body Control Module 3
5	Crank
6	Body Control Module 2
7	Body Control Module
8	Cooling Fan 2 (LE5); Empty (LNF)

Downloaded from www.Manualslib.com manuals search engine

Fuses	Usage
9	Empty
10	Trunk
11	Trunk
12	Empty
13	Fuel Pump
14	Rear Defogger Relay
15	Air Conditioning Clutch Relay
16	Empty
17	Empty
18	Trunk Release Relay
19	Fuel Pump Relay
20	Empty
21	Mirrors
22	Air Conditioning
23	Empty
24	Cooling Fan 2 Relay (LE5); Empty (LNF)
25	Fuse Puller
26	Powertrain Relay

Fuses	Usage
27	Empty
28	Back-up Lamps Relay (Automatic Transmission); Empty (Manual Transmission)
29	Data Link Connector
30	Outlet
31	Back-up Lamps (Automatic Transmission); Empty (Manual Transmission)
32	Empty (LE5); Vacuum Pump (LNF)
33	Emissions
34	Crank Relay
35	Empty
36	Empty
37	Power Seat
38	Empty (LE5); Vacuum Pump Relay (LNF)
39	Empty
40	Cooling Fan 1 (LE5); Empty (LNF)
41	Empty (LE5); Turbo, Cam Phaser (LNF)

Downloaded from www.Manualslib.com manuals search engine

Fuses	Usage
42	Engine Control Module
43	Engine Control Module, Transmission
44	Anti-lock Brake System
45	Injectors, Ignition Coils (LE5); Ignition Coils (LNF)
46	Back-up Lamps (Manual Transmission); Empty (Automatic Transmission)
47	Empty
48	Daytime Running Lamps Relay
49	Daytime Running Lamps
50	Cooling Fan 1 Relay (LE5); Empty (LNF)
51	Run/Crank Relay
52	Windshield Wiper Low/High Relay
53	Fog Lamps
54	Fog Lamps Relay
55	Horn Relay
56	S Band, OnStar®, Remote Keyless Entry System

Fuses	Usage
57	Anti-lock Brake System
58	Wiper Diode
59	Windshield Wiper
60	Horn
61	Anti-lock Brake System
62	Instrument Panel Ignition
63	Driver's Side High Beam
64	Canister Vent
65	Driver's Side Low-Beam Headlamp
66	Passenger's Side Low-Beam Headlamp
67	Passenger's Side High-Beam Headlamp
68	Parking Lamps Relay
69	Parking Lamps
70	Windshield Wiper On/Off Relay
71	Low-Beam Headlamp Relay
72	High-Beam Headlamp Relay

Downloaded from www.Manualslib.com manuals search engine

Capacities and Specifications

The following approximate capacities are given in English and metric conversions. Please refer to *Part D: Recommended Fluids and Lubricants on page 353* for more information.

Application	Capacities	
	English	Metric
Air Conditioning Refrigerant R134a	For the air conditioning system refrigerant charge amount, see the refrigerant caution label located under the hood. See your dealer for more information.	
Cooling System		
2.0L Engine Automatic	8.9 qt	8.4 L
2.0L Engine Manual	9.0 qt	8.6 L
2.4L Engine Automatic	8.5 qt	8.0 L
2.4L Engine Manual	8.7 qt	8.2 L
Engine Oil with Filter	5.0 qt	4.7 L
Fuel Tank	13.6 gal	51.5 L
Transmission, Automatic (Complete Drain and Refill)	7.4 qt	7.0 L
Transmission, Manual (Complete Drain and Refill)	2.75 qt	2.6 L
Wheel Nut Torque	100 lb ft	140 N•m
All capacities are approximate. When adding, be sure to fill to the appropriate level, as recommended in this manual.		

Engine Specifications

Engine	VIN Code	Transmission	Spark Plug Gap
2.0L L4	X	Automatic Manual	0.035 inch (0.90 mm)
2.4L L4	B	Automatic Manual	0.040 inch (1.01 mm)

Downloaded from www.Manualslib.com manuals search engine

Section 6 Maintenance Schedule

Maintenance Schedule 334
Introduction 334
Maintenance Requirements 334
Your Vehicle and the Environment 334
How This Section is Organized 334
Part A: Scheduled Maintenance Services 336
Using the Maintenance Schedule 336
Scheduled Maintenance 337
Part B: Owner Checks and Services 346
At Each Fuel Fill 346
At Least Once a Month 346
At Least Twice a Year 347
At Least Once a Year 348
Part C: Periodic Maintenance Inspections 351
Steering and Suspension Inspection 351
Exhaust System Inspection 351
Fuel System Inspection 351
Engine Cooling System Inspection 352
Throttle System Inspection 352
Brake System Inspection 352
Part D: Recommended Fluids and Lubricants 353
Normal Maintenance Replacement Parts ... 355
Engine Drive Belt Routing 356
Part E: Maintenance Record 357

Downloaded from www.Manualslib.com manuals search engine

Maintenance Schedule

Introduction

Important: Keep engine oil at the proper level and change as recommended.

Have you purchased the GM Protection Plan? The Plan supplements your new vehicle warranties. See your Warranty and Owner Assistance booklet or your dealer for details.

Maintenance Requirements

Maintenance intervals, checks, inspections and recommended fluids and lubricants as prescribed in this manual are necessary to keep your vehicle in good working condition. Any damage caused by failure to follow scheduled maintenance may not be covered by warranty.

Your Vehicle and the Environment

Proper vehicle maintenance not only helps to keep your vehicle in good working condition, but also helps the environment. Improper vehicle maintenance can even affect the quality of the air we breathe. Improper fluid levels or the wrong tire inflation can increase the level of emissions from your vehicle. To help protect our environment, and to keep your vehicle in good condition, be sure to maintain your vehicle properly.

How This Section is Organized

This maintenance schedule is divided into five parts:

"Part A: Scheduled Maintenance Services" explains what to have done and how often. Some of these services can be complex, so unless you are technically qualified and have the necessary equipment, you should let your GM dealer's service department do these jobs.

Your GM dealer has GM-trained and supported service people that will perform the work using genuine GM parts.

Downloaded from www.Manualslib.com manuals search engine

⚠ CAUTION:

Performing maintenance work on a vehicle can be dangerous. In trying to do some jobs, you can be seriously injured. Do your own maintenance work only if you have the required know-how and the proper tools and equipment for the job. If you have any doubt, have a qualified technician do the work. See *Doing Your Own Service Work on page 236*.

If you want to purchase service information, see *Service Publications Ordering Information on page 380*.

"Part B: Owner Checks and Services" tells you what should be checked and when. It also explains what you can easily do to help keep your vehicle in good condition.

"Part C: Periodic Maintenance Inspections" explains important inspections that your dealer's service department can perform for you.

"Part D: Recommended Fluids and Lubricants" lists some recommended products necessary to help keep your vehicle properly maintained. These products, or their equivalents, should be used whether you do the work yourself or have it done.

"Part E: Maintenance Record" is a place for you to record and keep track of the maintenance performed on your vehicle. Keep your maintenance receipts. They may be needed to qualify your vehicle for warranty repairs.

Downloaded from www.Manualslib.com manuals search engine

Part A: Scheduled Maintenance Services

In this part are scheduled maintenance services which are to be performed at the mileage intervals specified.

Using the Maintenance Schedule

We at General Motors want to keep your vehicle in good working condition. But we do not know exactly how you will drive it. You may drive short distances only a few times a week. Or you may drive long distances all the time in very hot, dusty weather. You may use your vehicle in making deliveries. Or you may drive it to work, to do errands, or in many other ways.

Because of the different ways people use their vehicles, maintenance needs may vary. You may need more frequent checks and replacements. So please read the following and note how you drive. If you have questions on how to keep your vehicle in good condition, see your dealer.

This part tells you the maintenance services you should have done and when to schedule them.

When you go to your dealer for your service needs, you will know that GM-trained and supported service people will perform the work using genuine GM parts.

The proper fluids and lubricants to use are listed in Part D. Make sure whoever services your vehicle uses these. All parts should be replaced and all necessary repairs done before you or anyone else drives the vehicle.

These schedules are for vehicles that:

- carry passengers and cargo within recommended limits. You will find these on the Tire and Loading Information label. See *Loading Your Vehicle on page 226*.
- are driven on reasonable road surfaces within legal driving limits.
- use the recommended fuel. See *Gasoline Octane on page 237*.

Downloaded from www.Manualslib.com manuals search engine

Scheduled Maintenance

The services shown in this schedule up to 100,000 miles (160 000 km) should be repeated after 100,000 miles (160 000 km) at the same intervals for the life of this vehicle. The services shown at 150,000 miles (240 000 km) should be repeated at the same interval after 150,000 miles (240 000 km) for the life of this vehicle.

See *Part B: Owner Checks and Services on page 346* and *Part C: Periodic Maintenance Inspections on page 351*.

Footnotes

† *The U.S. Environmental Protection Agency or the California Air Resources Board has determined that the failure to perform this maintenance item will not nullify the emission warranty or limit recall liability prior to the completion of the vehicle's useful life. We, however, urge that all recommended maintenance services be performed at the indicated intervals and the maintenance be recorded.*

* *If your vehicle has a Driver Information Center (DIC), it also has the GM Oil Life System, a computer system that lets you know when to change the oil and filter. This is based on engine revolutions and engine temperature and not on mileage. Based on driving conditions, the mileage at which an oil change will be indicated can vary considerably. For the oil life system to work properly, you must reset the system every time the oil is changed.*

When the system has calculated that oil life has been diminished, it will indicate that an oil change is necessary. A CHANGE OIL SOON message on the Driver Information Center (DIC) will come on. See DIC Warnings and Messages on page 148. Change your oil as soon as possible within the next two times you stop for fuel. See Engine Oil on page 247. It is possible that, if you are driving under the best conditions, the oil life system may not indicate that an oil change is necessary for over a year. However, your engine oil and filter must be changed at least once a year and at this time the system must be reset. It is also important to check your oil regularly and keep it at the proper level.

Downloaded from www.Manualslib.com manuals search engine

If the system is ever reset accidentally, you must change your oil at 3,000 miles (5 000 km) since your last oil change. Remember to reset the oil life system whenever the oil is changed. See Engine Oil Life System on page 252 for information on resetting the system.

+ *A good time to check your brakes is during tire rotation. See Brake System Inspection on page 352.*

5,000 Miles (8 000 km)

- ❑ Vehicles with Driver Information Center (DIC): The Engine Oil Life System will tell you when to change the engine oil and filter. See *Engine Oil Life System on page 252*. *An Emission Control Service. (See footnote *)*
- ❑ Vehicles without Driver Information Center: Change engine oil and filter (or every 3 months, whichever occurs first). *An Emission Control Service.*
- ❑ Rotate tires. See *Tire Inspection and Rotation on page 293* for proper rotation pattern and additional information. *(See footnote +.)*

10,000 Miles (16 000 km)

- ❑ Vehicles with Driver Information Center (DIC): The Engine Oil Life System will tell you when to change the engine oil and filter. See *Engine Oil Life System on page 252*. *An Emission Control Service. (See footnote *)*
- ❑ Vehicles without Driver Information Center: Change engine oil and filter (or every 3 months, whichever occurs first). *An Emission Control Service.*
- ❑ Rotate tires. See *Tire Inspection and Rotation on page 293* for proper rotation pattern and additional information. *(See footnote +.)*

15,000 Miles (24 000 km)

- ❑ Vehicles with Driver Information Center (DIC): The Engine Oil Life System will tell you when to change the engine oil and filter. See *Engine Oil Life System on page 252*. *An Emission Control Service. (See footnote *)*
- ❑ Vehicles without Driver Information Center: Change engine oil and filter (or every 3 months, whichever occurs first). *An Emission Control Service.*

Downloaded from www.Manualslib.com manuals search engine

- ❑ Inspect engine air cleaner filter. If necessary, replace the filter. If vehicle is driven in dusty/dirty conditions, inspect filter at every engine oil change. See *Engine Air Cleaner/Filter on page 254* for more information.
- ❑ Rotate tires. See *Tire Inspection and Rotation on page 293* for proper rotation pattern and additional information. *(See footnote +.)*

20,000 Miles (32 000 km)

- ❑ Vehicles with Driver Information Center (DIC): The Engine Oil Life System will tell you when to change the engine oil and filter. See *Engine Oil Life System on page 252*. *An Emission Control Service. (See footnote *)*
- ❑ Vehicles without Driver Information Center: Change engine oil and filter (or every 3 months, whichever occurs first). *An Emission Control Service.*
- ❑ Rotate tires. See *Tire Inspection and Rotation on page 293* for proper rotation pattern and additional information. *(See footnote +.)*

25,000 Miles (40 000 km)

- ❑ Vehicles with Driver Information Center (DIC): The Engine Oil Life System will tell you when to change the engine oil and filter. See *Engine Oil Life System on page 252*. *An Emission Control Service. (See footnote *)*
- ❑ Vehicles without Driver Information Center: Change engine oil and filter (or every 3 months, whichever occurs first). *An Emission Control Service.*
- ❑ Rotate tires. See *Tire Inspection and Rotation on page 293* for proper rotation pattern and additional information. *(See footnote +.)*

Downloaded from www.Manualslib.com manuals search engine

30,000 Miles (48 000 km)

- ❑ Vehicles with Driver Information Center (DIC): The Engine Oil Life System will tell you when to change the engine oil and filter. See *Engine Oil Life System on page 252*. *An Emission Control Service. (See footnote *)*
- ❑ Vehicles without Driver Information Center: Change engine oil and filter (or every 3 months, whichever occurs first). *An Emission Control Service.*
- ❑ Inspect engine air cleaner filter. If necessary, replace the filter. If vehicle is driven in dusty/dirty conditions, inspect filter at every engine oil change. See *Engine Air Cleaner/Filter on page 254* for more information.
- ❑ Rotate tires. See *Tire Inspection and Rotation on page 293* for proper rotation pattern and additional information. *(See footnote +.)*

35,000 Miles (56 000 km)

- ❑ Vehicles with Driver Information Center (DIC): The Engine Oil Life System will tell you when to change the engine oil and filter. See *Engine Oil Life System on page 252*. *An Emission Control Service. (See footnote *)*
- ❑ Vehicles without Driver Information Center: Change engine oil and filter (or every 3 months, whichever occurs first). *An Emission Control Service.*
- ❑ Rotate tires. See *Tire Inspection and Rotation on page 293* for proper rotation pattern and additional information. *(See footnote +.)*

40,000 Miles (64 000 km)

- ❑ Vehicles with Driver Information Center (DIC): The Engine Oil Life System will tell you when to change the engine oil and filter. See *Engine Oil Life System on page 252*. *An Emission Control Service. (See footnote *)*
- ❑ Vehicles without Driver Information Center: Change engine oil and filter (or every 3 months, whichever occurs first). *An Emission Control Service.*
- ❑ Rotate tires. See *Tire Inspection and Rotation on page 293* for proper rotation pattern and additional information. *(See footnote +.)*

Downloaded from www.Manualslib.com manuals search engine

45,000 Miles (72 000 km)

- ❑ Vehicles with Driver Information Center (DIC): The Engine Oil Life System will tell you when to change the engine oil and filter. See *Engine Oil Life System on page 252*. *An Emission Control Service. (See footnote *)*
- ❑ Vehicles without Driver Information Center: Change engine oil and filter (or every 3 months, whichever occurs first). *An Emission Control Service.*
- ❑ Inspect engine air cleaner filter. If necessary, replace the filter. If vehicle is driven in dusty/dirty conditions, inspect filter at every engine oil change. See *Engine Air Cleaner/Filter on page 254* for more information.

50,000 Miles (80 000 km)

- ❑ Vehicles with Driver Information Center (DIC): The Engine Oil Life System will tell you when to change the engine oil and filter. See *Engine Oil Life System on page 252*. *An Emission Control Service. (See footnote *)*
- ❑ Vehicles without Driver Information Center: Change engine oil and filter (or every 3 months, whichever occurs first). *An Emission Control Service.*
- ❑ Replace engine air cleaner filter. See *Engine Air Cleaner/Filter on page 254* for more information.
- ❑ Rotate tires. See *Tire Inspection and Rotation on page 293* for proper rotation pattern and additional information. *(See footnote +.)*
- ❑ Change automatic transmission fluid and filter if the vehicle is mainly driven under one or more of these conditions:
  - – In heavy city traffic where the outside temperature regularly reaches 90°F (32°C) or higher.
  - – In hilly or mountainous terrain.
  - – Uses such as found in taxi, police, or delivery service.

If you do not use your vehicle under any of these conditions, change the fluid and filter at 100,000 miles (160 000 km).

Downloaded from www.Manualslib.com manuals search engine

55,000 Miles (88 000 km)

- ❑ Vehicles with Driver Information Center (DIC): The Engine Oil Life System will tell you when to change the engine oil and filter. See *Engine Oil Life System on page 252*. *An Emission Control Service. (See footnote *)*
- ❑ Vehicles without Driver Information Center: Change engine oil and filter (or every 3 months, whichever occurs first). *An Emission Control Service.*
- ❑ Rotate tires. See *Tire Inspection and Rotation on page 293* for proper rotation pattern and additional information. *(See footnote +.)*

60,000 Miles (96 000 km)

- ❑ Vehicles with Driver Information Center (DIC): The Engine Oil Life System will tell you when to change the engine oil and filter. See *Engine Oil Life System on page 252*. *An Emission Control Service. (See footnote *)*
- ❑ Vehicles without Driver Information Center: Change engine oil and filter (or every 3 months, whichever occurs first). *An Emission Control Service.*
- ❑ Inspect engine air cleaner filter. If necessary, replace the filter. If vehicle is driven in dusty/dirty conditions, inspect filter at every engine oil change. See *Engine Air Cleaner/Filter on page 254* for more information.
- ❑ Rotate tires. See *Tire Inspection and Rotation on page 293* for proper rotation pattern and additional information. *(See footnote +.)*

65,000 Miles (104 000 km)

- ❑ Vehicles with Driver Information Center (DIC): The Engine Oil Life System will tell you when to change the engine oil and filter. See *Engine Oil Life System on page 252*. *An Emission Control Service. (See footnote *)*
- ❑ Vehicles without Driver Information Center: Change engine oil and filter (or every 3 months, whichever occurs first). *An Emission Control Service.*
- ❑ Rotate tires. See *Tire Inspection and Rotation on page 293* for proper rotation pattern and additional information. *(See footnote +.)*

Downloaded from www.Manualslib.com manuals search engine

70,000 Miles (112 000 km)

- ❑ Vehicles with Driver Information Center (DIC): The Engine Oil Life System will tell you when to change the engine oil and filter. See *Engine Oil Life System on page 252*. *An Emission Control Service. (See footnote *)*
- ❑ Vehicles without Driver Information Center: Change engine oil and filter (or every 3 months, whichever occurs first). *An Emission Control Service.*
- ❑ Rotate tires. See *Tire Inspection and Rotation on page 293* for proper rotation pattern and additional information. *(See footnote +.)*

75,000 Miles (120 000 km)

- ❑ Vehicles with Driver Information Center (DIC): The Engine Oil Life System will tell you when to change the engine oil and filter. See *Engine Oil Life System on page 252*. *An Emission Control Service. (See footnote *)*
- ❑ Vehicles without Driver Information Center: Change engine oil and filter (or every 3 months, whichever occurs first). *An Emission Control Service.*
- ❑ Inspect engine air cleaner filter. If necessary, replace the filter. If vehicle is driven in dusty/dirty conditions, inspect filter at every engine oil change. See *Engine Air Cleaner/Filter on page 254* for more information.

80,000 Miles (128 000 km)

- ❑ Vehicles with Driver Information Center (DIC): The Engine Oil Life System will tell you when to change the engine oil and filter. See *Engine Oil Life System on page 252*. *An Emission Control Service. (See footnote *)*
- ❑ Vehicles without Driver Information Center: Change engine oil and filter (or every 3 months, whichever occurs first). *An Emission Control Service.*
- ❑ Rotate tires. See *Tire Inspection and Rotation on page 293* for proper rotation pattern and additional information. *(See footnote +.)*

Downloaded from www.Manualslib.com manuals search engine

85,000 Miles (136 000 km)

- ❑ Vehicles with Driver Information Center (DIC): The Engine Oil Life System will tell you when to change the engine oil and filter. See *Engine Oil Life System on page 252*. *An Emission Control Service. (See footnote *)*
- ❑ Vehicles without Driver Information Center: Change engine oil and filter (or every 3 months, whichever occurs first). *An Emission Control Service.*
- ❑ Rotate tires. See *Tire Inspection and Rotation on page 293* for proper rotation pattern and additional information. *(See footnote +.)*

90,000 Miles (144 000 km)

- ❑ Vehicles with Driver Information Center (DIC): The Engine Oil Life System will tell you when to change the engine oil and filter. See *Engine Oil Life System on page 252*. *An Emission Control Service. (See footnote *)*
- ❑ Vehicles without Driver Information Center: Change engine oil and filter (or every 3 months, whichever occurs first). *An Emission Control Service.*
- ❑ Inspect engine air cleaner filter. If necessary, replace the filter. If vehicle is driven in dusty/dirty conditions, inspect filter at every engine oil change. See *Engine Air Cleaner/Filter on page 254* for more information.
- ❑ Rotate tires. See *Tire Inspection and Rotation on page 293* for proper rotation pattern and additional information. *(See footnote +.)*

95,000 Miles (152 000 km)

- ❑ Vehicles with Driver Information Center (DIC): The Engine Oil Life System will tell you when to change the engine oil and filter. See *Engine Oil Life System on page 252*. *An Emission Control Service. (See footnote *)*
- ❑ Vehicles without Driver Information Center: Change engine oil and filter (or every 3 months, whichever occurs first). *An Emission Control Service.*
- ❑ Rotate tires. See *Tire Inspection and Rotation on page 293* for proper rotation pattern and additional information. *(See footnote +.)*

Downloaded from www.Manualslib.com manuals search engine

100,000 Miles (160 000 km)

- ❑ Vehicles with Driver Information Center (DIC): The Engine Oil Life System will tell you when to change the engine oil and filter. See *Engine Oil Life System on page 252*. *An Emission Control Service. (See footnote *)*
- ❑ Vehicles without Driver Information Center: Change engine oil and filter (or every 3 months, whichever occurs first). *An Emission Control Service.*
- ❑ Replace engine air cleaner filter. See *Engine Air Cleaner/Filter on page 254* for more information.
- ❑ Rotate tires. See *Tire Inspection and Rotation on page 293* for proper rotation pattern and additional information. *(See footnote +.)*
- ❑ Replace spark plugs. *An Emission Control Service.*
- ❑ Change automatic transmission fluid and filter if the vehicle is mainly driven under one or more of these conditions:
  - – In heavy city traffic where the outside temperature regularly reaches 90°F (32°C) or higher.
  - – In hilly or mountainous terrain.
  - – Uses such as found in taxi, police, or delivery service.

If you have not used your vehicle under severe service conditions listed previously and, therefore, have not changed your automatic transmission fluid, change both the fluid and filter.

150,000 Miles (240 000 km)

- ❑ Drain, flush, and refill cooling system (or every 60 months since last service, whichever occurs first). This service can be complex; you should have your dealer perform this service. See *Engine Coolant on page 257* for what to use. Inspect hoses. Clean radiator, condenser, pressure cap, and neck. Pressure test the cooling system and pressure cap. *An Emission Control Service.*
- ❑ Inspect engine accessory drive belt. Visually inspect belt for fraying, excessive cracks, or obvious damage. Replace belt if necessary. *An Emission Control Service.*

Downloaded from www.Manualslib.com manuals search engine

Part B: Owner Checks and Services

Listed in this part are owner checks and services which should be performed at the intervals specified to help ensure the safety, dependability and emission control performance of your vehicle.

Be sure any necessary repairs are completed at once. Whenever any fluids or lubricants are added to your vehicle, make sure they are the proper ones, as shown in Part D.

At Each Fuel Fill

It is important for you or a service station attendant to perform these underhood checks at each fuel fill.

Engine Oil Level Check

Check the engine oil level and add the proper oil if necessary. See *Engine Oil on page 247* for further details.

Engine Coolant Level Check

Check the engine coolant level and add DEX-COOL® coolant mixture if necessary. See *Engine Coolant on page 257* for further details.

Windshield Washer Fluid Level Check

Check the windshield washer fluid level in the windshield washer fluid reservoir and add the proper fluid if necessary. See *Windshield Washer Fluid on page 269* for further details.

At Least Once a Month

Tire Inspection and Inflation Check

Visually inspect your vehicle's tires for wear and make sure they are inflated to the correct pressures. See *Inflation - Tire Pressure on page 292*.

Downloaded from www.Manualslib.com manuals search engine

At Least Twice a Year

Restraint System Check

Make sure the safety belt reminder light and all your belts, buckles, latch plates, retractors and anchorages are working properly. Look for any other loose or damaged safety belt system parts. If you see anything that might keep a safety belt system from doing its job, have it repaired. Have any torn or frayed safety belts replaced.

Also look for any opened or broken airbag coverings, and have them repaired or replaced. The airbag system does not need regular maintenance.

Wiper Blade Check

Inspect wiper blades for wear or cracking. Replace blade inserts that appear worn or damaged or that streak or miss areas of the windshield. Also see *Windshield and Wiper Blades on page 320*.

Weatherstrip Lubrication

Silicone grease on weatherstrips will make them last longer, seal better, and not stick or squeak. Apply silicone grease with a clean cloth.

During very cold, damp weather more frequent application may be required. See *Part D: Recommended Fluids and Lubricants on page 353*.

Manual Transmission Check

It is not necessary to check the transmission fluid level. Check for leaks. A fluid leak is the only reason for fluid loss. Have the system inspected and repaired if needed.

Automatic Transmission Inspection

It is not necessary to check the transmission fluid level. A transmission fluid leak is the only reason for fluid loss. Check for leaks. If a leak occurs, take the vehicle to your dealer and have it repaired as soon as possible.

Hydraulic Clutch System Check

Check the fluid level in the brake system and clutch system reservoir. See *Hydraulic Clutch on page 256*. A fluid loss in the brake or clutch hydraulic system could indicate a problem. Have the system inspected and repaired at once.

Downloaded from www.Manualslib.com manuals search engine

At Least Once a Year

Key Lock Cylinders Service

Lubricate the key lock cylinders with the lubricant specified in Part D.

Body Lubrication Service

Lubricate all hood latch assemblies, secondary latch, pivots, spring anchor, release pawl, hood and body door hinges, rear compartment, and any folding seat hardware. Part D tells you what to use. More frequent lubrication may be required when exposed to a corrosive environment.

Starter Switch Check

⚠ CAUTION:

When you are doing this inspection, the vehicle could move suddenly. If the vehicle moves, you or others could be injured.

1. Before you start, be sure you have enough room around the vehicle.
2. Firmly apply both the parking brake and the regular brake. See *Parking Brake on page 86*.

   Do not use the accelerator pedal, and be ready to turn off the engine immediately if it starts.
3. On automatic transmission vehicles, try to start the engine in each gear. The vehicle should start only in PARK (P) or NEUTRAL (N). If the vehicle starts in any other position, contact your GM Goodwrench® dealer for service.

   On manual transmission vehicles, put the shift lever in NEUTRAL, push the clutch pedal down halfway, and try to start the engine.

Downloaded from www.Manualslib.com manuals search engine

The vehicle should start only when the clutch pedal is pushed down all the way to the floor. If the vehicle starts when the clutch pedal is not pushed all the way down, contact your GM Goodwrench® dealer for service.

Automatic Transmission Shift Lock Control System Check

⚠ CAUTION:

When you are doing this inspection, the vehicle could move suddenly. If the vehicle moves, you or others could be injured.

1. Before you start, be sure you have enough room around the vehicle. It should be parked on a level surface.
2. Firmly apply the parking brake. See *Parking Brake on page 86*.

   Be ready to apply the regular brake immediately if the vehicle begins to move.
3. With the engine off, turn the ignition to RUN, but do not start the engine. Without applying the regular brake, try to move the shift lever out of PARK (P) with normal effort. If the shift lever moves out of PARK (P), contact your GM Goodwrench® dealer for service.

Ignition Transmission Lock Check

While parked, and with the parking brake set, try to turn the ignition to LOCK in each shift lever position.

- With an automatic transmission, the ignition should turn to LOCK only when the shift lever is in PARK (P). The ignition key should come out only in LOCK.
- With a manual transmission, the ignition key should come out only in LOCK.

Turn the steering wheel to the left and to the right. It should only lock when turned to the right. Contact your GM Goodwrench® dealer if service is required.

Downloaded from www.Manualslib.com manuals search engine

Parking Brake and Automatic Transmission Park (P) Mechanism Check

⚠ CAUTION:

When you are doing this check, your vehicle could begin to move. You or others could be injured and property could be damaged. Make sure there is room in front of your vehicle in case it begins to roll. Be ready to apply the regular brake at once should the vehicle begin to move.

Park on a fairly steep hill, with the vehicle facing downhill. Keeping your foot on the regular brake, set the parking brake.

- To check the parking brake's holding ability: With the engine running and transmission in NEUTRAL (N), slowly remove foot pressure from the regular brake pedal. Do this until the vehicle is held by the parking brake only.
- To check the PARK (P) mechanism's holding ability: With the engine running, shift to PARK (P). Then release the parking brake followed by the regular brake.

Contact your GM Goodwrench® dealer if service is required.

Underbody Flushing Service

At least every spring, use plain water to flush any corrosive materials from the underbody. Take care to clean thoroughly any areas where mud and other debris can collect.

Downloaded from www.Manualslib.com manuals search engine

Part C: Periodic Maintenance Inspections

Listed in this part are inspections and services which should be performed at least twice a year (for instance, each spring and fall). *You should let your dealer's service department do these jobs. Make sure any necessary repairs are completed at once.*

Proper procedures to perform these services may be found in a service manual. See *Service Publications Ordering Information on page 380*.

Steering and Suspension Inspection

Inspect the front and rear suspension and steering system for damaged, loose or missing parts, signs of wear or lack of lubrication. Inspect the power steering lines and hoses for proper hook-up, binding, leaks, cracks, chafing, etc.

Exhaust System Inspection

Inspect the complete exhaust system. Inspect the body near the exhaust system. Look for broken, damaged, missing or out-of-position parts as well as open seams, holes, loose connections or other conditions which could cause a heat build-up in the floor pan or could let exhaust fumes into the vehicle. See *Engine Exhaust on page 91*.

Fuel System Inspection

Inspect the complete fuel system for damage or leaks.

Downloaded from www.Manualslib.com manuals search engine

Engine Cooling System Inspection

Inspect the hoses and have them replaced if they are cracked, swollen or deteriorated. Inspect all pipes, fittings and clamps; replace as needed. Clean the outside of the radiator and air conditioning condenser. To help ensure proper operation, a pressure test of the cooling system and pressure cap is recommended at least once a year.

Throttle System Inspection

Inspect the throttle system for interference or binding, and for damaged or missing parts. Replace parts as needed. Replace any components that have high effort or excessive wear. Do not lubricate accelerator and cruise control cables.

Brake System Inspection

Inspect the complete system. Inspect brake lines and hoses for proper hook-up, binding, leaks, cracks, chafing, etc. Inspect disc brake pads for wear and rotors for surface condition. Inspect other brake parts, including calipers, parking brake, etc. You may need to have your brakes inspected more often if your driving habits or conditions result in frequent braking.

Downloaded from www.Manualslib.com manuals search engine

Part D: Recommended Fluids and Lubricants

Fluids and lubricants identified below by name, part number, or specification may be obtained from your dealer.

Usage	Fluid/Lubricant
Engine Oil (2.4L L4 engine)	Engine oil which meets GM Standard GM6094M and displays the American Petroleum Institute Certified for Gasoline Engines starburst symbol. GM Goodwrench® oil meets all the requirements for your vehicle. To determine the proper viscosity for your vehicle's engine, see *Engine Oil on page 247*.

Usage	Fluid/Lubricant
Engine Oil (2.0L L4 engine)	The engine requires a special engine oil meeting GM Standard GM4718M. Oils meeting this standard may be identified with the American Petroleum Institute (API) Certified for Gasoline Engines starburst symbol. However, not all synthetic API oils with the starburst symbol will meet this GM standard. You should look for and use only an oil that meets GM Standard GM4718M. GM Goodwrench® oil meets all the requirements for your vehicle. For the proper viscosity, see *Engine Oil on page 247*.
Engine Coolant	50/50 mixture of clean, drinkable water and use only DEX-COOL® Coolant. See *Engine Coolant on page 257*.
Hydraulic Brake System	Delco® Supreme 11 Brake Fluid or equivalent DOT-3 brake fluid.
Hydraulic Clutch System	Delco® Supreme 11 Brake Fluid or equivalent DOT-3 brake fluid.
Power Steering System	GM Power Steering Fluid (GM Part No. U.S. 89021184, in Canada 89021186).

Downloaded from www.Manualslib.com manuals search engine

Usage	Fluid/Lubricant
Windshield Washer	Optikleen® Washer Solvent.
Manual Transmission	Manual Transmission Fluid (GM Part No. U.S. 89021806, in Canada 89021807).
Automatic Transmission	DEXRON®-VI Automatic Transmission Fluid.
Key Lock Cylinders	Multi-Purpose Lubricant, Superlube (GM Part No. U.S. 12346241, in Canada 10953474).
Rear Axle	SAE 75W-90 Synthetic Axle Lubricant (GM Part No. U.S. 12378261, in Canada 10953455) meeting GM Specification 9986115.
Rear Axle (Limited-Slip Differential)	SAE 75W-90 Synthetic Axle Lubricant (GM Part No. U.S. 12378261, in Canada 10953455) meeting GM Specification 9986115. With a complete drain and refill add 4 ounces (118 ml) of Limited-Slip Axle Lubricant Additive (GM Part No. U.S. 1052358, in Canada 992694) where required. See *Rear Axle on page 279*.

Usage	Fluid/Lubricant
Chassis Lubrication	Chassis Lubricant (GM Part No. U.S. 12377985, in Canada 88901242) or lubricant meeting requirements of NLGI #2, Category LB or GC-LB.
Hood Latch Assembly, Secondary Latch, Pivots, Spring Anchor, and Release Pawl	Lubriplate Lubricant Aerosol (GM Part No. U.S. 12346293, in Canada 992723) or lubricant meeting requirements of NLGI #2, Category LB or GC-LB.
Hood and Door Hinges	Multi-Purpose Lubricant, Superlube (GM Part No. U.S. 12346241, in Canada 10953474).
Weatherstrip Conditioning	Weatherstrip Lubricant (GM Part No. U.S. 3634770, in Canada 10953518) or Dielectric Silicone Grease (GM Part No. U.S. 12345579, in Canada 992887).

Downloaded from www.Manualslib.com manuals search engine

Normal Maintenance Replacement Parts

Replacement parts identified below by name, part number, or specification can be obtained from your GM dealer.

Normal Maintenance Replacement Parts

Part	GM Part Number	ACDelco® Part Number
Engine Air Cleaner/Filter	15287103	A3076C
Engine Oil Filter	12605566	PF457G
Spark Plugs		
2.4L Engine	12598004	41-103
2.0L Engine	12590701	41-102
Windshield Wiper Blade (Hook Type)		
Driver's Side —16 inches (40 cm)	10344209	—
Passenger's Side — 22 inches (55 cm)	10344210	—

Downloaded from www.Manualslib.com manuals search engine

Engine Drive Belt Routing

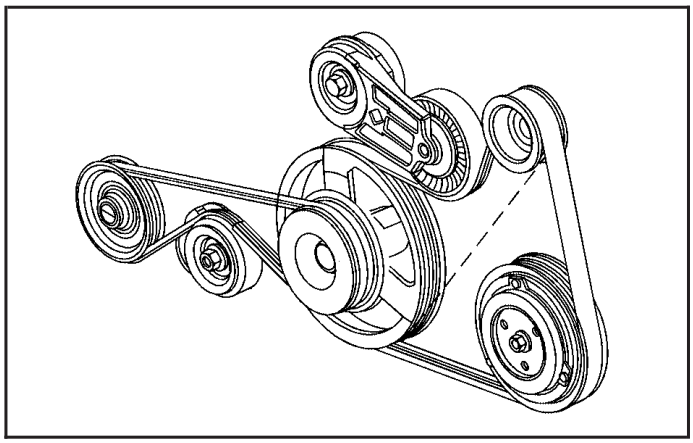

2.0L and 2.4L L4 Engines

Belt routing for A/C option shown. Dotted line represents routing for non A/C option.

Downloaded from www.Manualslib.com manuals search engine

Part E: Maintenance Record

After the scheduled services are performed, record the date, odometer reading, and who performed the service and any additional information from “Owner Checks and Services” or “Periodic Maintenance” on the following record pages. Also, you should retain all maintenance receipts.

Maintenance Record

Date	Odometer Reading	Serviced By	Maintenance Record

Downloaded from www.Manualslib.com manuals search engine

Maintenance Record (cont'd)

Date	Odometer Reading	Serviced By	Maintenance Record

Downloaded from www.Manualslib.com manuals search engine

Maintenance Record (cont'd)

Date	Odometer Reading	Serviced By	Maintenance Record

Downloaded from www.Manualslib.com manuals search engine

Maintenance Record (cont'd)

Date	Odometer Reading	Serviced By	Maintenance Record

Downloaded from www.Manualslib.com manuals search engine

Section 7 Customer Assistance Information

Customer Assistance and Information 362
Customer Satisfaction Procedure 362
Online Owner Center 365
Customer Assistance for Text Telephone (TTY) Users 366
Customer Assistance Offices 366
GM Mobility Reimbursement Program 367
Roadside Assistance Program 368
Courtesy Transportation 371
Vehicle Data Collection and Event Data Recorders 373
Collision Damage Repair 375
Reporting Safety Defects 379
Reporting Safety Defects to the United States Government 379
Reporting Safety Defects to the Canadian Government 379
Reporting Safety Defects to General Motors 379
Service Publications Ordering Information 380

Downloaded from www.Manualslib.com manuals search engine

Customer Assistance and Information

Customer Satisfaction Procedure

Your satisfaction and goodwill are important to your dealer and to Pontiac. Normally, any concerns with the sales transaction or the operation of your vehicle will be resolved by your dealer's sales or service departments. Sometimes, however, despite the best intentions of all concerned, misunderstandings can occur. If your concern has not been resolved to your satisfaction, the following steps should be taken:

STEP ONE: Discuss your concern with a member of dealership management. Normally, concerns can be quickly resolved at that level. If the matter has already been reviewed with the sales, service, or parts manager, contact the owner of the dealership or the general manager.

STEP TWO: If after contacting a member of dealership management, it appears your concern cannot be resolved by the dealership without further help, in the U.S., contact the Pontiac Customer Assistance Center by calling 1-800-762-2737. In Canada, contact General Motors of Canada Customer Communication Centre in Oshawa by calling 1-800-263-3777 (English) or 1-800-263-7854 (French).

We encourage you to call the toll-free number in order to give your inquiry prompt attention. Please have the following information available to give the Customer Assistance Representative:

- Vehicle Identification Number (VIN). This is available from the vehicle registration or title, or the plate at the top left of the instrument panel and visible through the windshield.
- Dealership name and location.
- Vehicle delivery date and present mileage.

Downloaded from www.Manualslib.com manuals search engine

When contacting Pontiac, please remember that your concern will likely be resolved at a dealer's facility. That is why we suggest you follow Step One first if you have a concern.

STEP THREE — U.S. Owners: Both General Motors and your dealer are committed to making sure you are completely satisfied with your new vehicle. However, if you continue to remain unsatisfied after following the procedure outlined in Steps One and Two, you should file with the BBB Auto Line Program to enforce your rights.

The BBB Auto Line Program is an out of court program administered by the Council of Better Business Bureaus to settle automotive disputes regarding vehicle repairs or the interpretation of the New Vehicle Limited Warranty. Although you may be required to resort to this informal dispute resolution program prior to filing a court action, use of the program is free of charge and your case will generally be heard within 40 days. If you do not agree with the decision given in your case, you may reject it and proceed with any other venue for relief available to you.

You can contact the BBB Auto Line Program using the toll-free telephone number or write them at the following address:

BBB Auto Line Program
Council of Better Business Bureaus, Inc.
4200 Wilson Boulevard
Suite 800
Arlington, VA 22203-1838

Telephone: 1-800-955-5100

This program is available in all 50 states and the District of Columbia. Eligibility is limited by vehicle age, mileage and other factors. General Motors reserves the right to change eligibility limitations and/or discontinue its participation in this program.

Downloaded from www.Manualslib.com manuals search engine

STEP THREE — Canadian Owners: In the event that you do not feel your concerns have been addressed after following the procedure outlined in Steps One and Two, General Motors of Canada Limited wants you to be aware of its participation in a no-charge Mediation/Arbitration Program. General Motors of Canada Limited has committed to binding arbitration of owner disputes involving factory-related vehicle service claims. The program provides for the review of the facts involved by an impartial third party arbiter, and may include an informal hearing before the arbiter. The program is designed so that the entire dispute settlement process, from the time you file your complaint to the final decision, should be completed in approximately 70 days. We believe our impartial program offers advantages over courts in most jurisdictions because it is informal, quick, and free of charge.

For further information concerning eligibility in the Canadian Motor Vehicle Arbitration Plan (CAMVAP), call toll-free 1-800-207-0685. Alternatively, you can call the General Motors Customer Communication Centre, 1-800-263-3777 (English), 1-800-263-7854 (French), or write to:

Mediation/Arbitration Program
c/o Customer Communication Centre
General Motors of Canada Limited
Mail Code: CA1-163-005
1908 Colonel Sam Drive
Oshawa, Ontario L1H 8P7

Your inquiry should be accompanied by your Vehicle Identification Number (VIN).

Downloaded from www.Manualslib.com manuals search engine

Online Owner Center

Online Owner Center (United States only)

The Owner Center is a resource for your GM ownership needs. Specific vehicle information can be found in one place.

The Online Owner Center allows you to:

- Get e-mail service reminders.
- Access information about your specific vehicle, including tips and videos and an electronic version of this owner manual.
- Keep track of your vehicle's service history and maintenance schedule.
- Find GM dealers for service nationwide.
- Receive special promotions and privileges only available to members.

Refer to www.MyGMLink.com on the web for updated information and to register your vehicle.

My GM Canada (Canada only)

My GM Canada is a password-protected section of gmcanada.com where you can save information on GM vehicles, get personalized offers, and use handy tools and forms with greater ease.

Here are a few of the valuable tools and services you will have access to:

- My Showroom: Find and save information on vehicles and current offers in your area.
- My Dealers/Retailers: Save details such as address and phone number for each of your preferred GM Dealers or Retailers.
- My Driveway: Receive service reminders and helpful advice on owning and maintaining your vehicle.
- My Preferences: Manage your profile, subscribe to E-News and use tools and forms with greater ease.

To sign up to My GM Canada, visit the My GM Canada section within www.gmcanada.com.

Downloaded from www.Manualslib.com manuals search engine

Customer Assistance for Text Telephone (TTY) Users

To assist customers who are deaf, hard of hearing, or speech-impaired and who use Text Telephones (TTYs), Pontiac has TTY equipment available at its Customer Assistance Center. Any TTY user can communicate with Pontiac by dialing: 1-800-833-PONT (7668). (TTY users in Canada can dial 1-800-263-3830.)

Customer Assistance Offices

Pontiac encourages customers to call the toll-free number for assistance. However, if a customer wishes to write or e-mail Pontiac, the letter should be addressed to:

United States — Customer Assistance

Pontiac Customer Assistance Center
P.O. Box 33172
Detroit, MI 48232-5172

www.Pontiac.com
1-800-762-2737 or
1-800-833-7668
(For Text Telephone devices (TTYs))
Roadside Assistance: 1-800-ROADSIDE (762-3743)
Fax Number: 313-381-0022

From Puerto Rico:
1-800-496-9992 (English)
1-800-496-9993 (Spanish)
Fax Number: 313-381-0022

From U.S. Virgin Islands:
1-800-496-9994
Fax Number: 313-381-0022

Canada — Customer Assistance

General Motors of Canada Limited
Customer Communication Centre, CA1-163-005
1908 Colonel Sam Drive
Oshawa, Ontario L1H 8P7

www.gmcanada.com
1-800-263-3777 (English)
1-800-263-7854 (French)
1-800-263-3830 (For Text Telephone devices (TTYs))
Roadside Assistance: 1-800-268-6800

Downloaded from www.Manualslib.com manuals search engine

Overseas — Customer Assistance

Please contact the local General Motors Business Unit.

Mexico, Central America and Caribbean Islands/Countries (Except Puerto Rico and U.S. Virgin Islands) — Customer Assistance

General Motors de Mexico, S. de R.L. de C.V.
Customer Assistance Center
Paseo de la Reforma #2740
Col. Lomas de Bezares
C.P. 11910, Mexico, D.F.
01-800-508-0000
Long Distance: 011-52-53 29 0 800

GM Mobility Reimbursement Program

GM MOBILITY℠

This program, available to qualified applicants, can reimburse you up to $1,000 of the cost of eligible aftermarket adaptive equipment required for your vehicle, such as hand controls or a wheelchair/scooter lift.

The offer is available for a very limited period of time from the date of vehicle purchase/lease. For more details, or to determine your vehicle's eligibility, visit gmmobility.com or call the GM Mobility Assistance Center at 1-800-323-9935. Text telephone (TTY) users, call 1-800-833-9935.

General Motors of Canada also has a Mobility Program. Call 1-800-GM-DRIVE (463-7483) for details. TTY users call 1-800-263-3830.

Downloaded from www.Manualslib.com manuals search engine

Roadside Assistance Program

In the U.S., call **1-800-ROADSIDE (762-3743)**

In Canada, call **1-800-268-6800**

Service available 24 hours a day, 365 days a year.

As the owner of a new Pontiac vehicle, you are automatically enrolled in the Pontiac Roadside Assistance program. This value-added service is intended to provide you with peace of mind as you drive in the city or travel the open road.

Who is Covered?

Roadside Assistance coverage is for the vehicle operator, regardless of ownership. A person driving this vehicle without the consent of the owner is not eligible for coverage.

The following services are provided in the U.S. during the Bumper-to-Bumper warranty period and, in Canada, during the Base Warranty coverage period of the New Vehicle Limited Warranty, up to a maximum coverage of $100.

- **Fuel Delivery:** Delivery of enough fuel for the customer to get to the nearest service station (approximately $5 in the U.S. and 10 litres in Canada). Service to provide diesel may be restricted. For safety reasons, propane and other alternative fuels will not be provided through this service.
- **Lock-out Service:** To ensure security, the driver must present the vehicle registration and personal ID before lock-out service is provided. Lock-out service is covered at no charge if you are unable to gain entry into your vehicle. If your vehicle does not start, Roadside Assistance will arrange to have your vehicle towed to the nearest authorized dealership. In the U.S., replacement keys made at the customer's expense will be covered within 10 miles (16 km).

Downloaded from www.Manualslib.com manuals search engine

- **Emergency Tow From a Public Roadway or Highway:** Tow to the nearest dealership for warranty service or in the event of a vehicle-disabling accident. Winch-out assistance when the vehicle is mired in sand, mud, or snow.
- **Flat Tire Change:** Installation of your spare tire in good condition is covered at no charge. The customer is responsible for the repair or replacement of the tire if not covered by a warrantable failure.
- **Jump Start:** No-start occurrences which require a battery jump start is covered at no charge.

Additional Services for Canadian Customers

- **Trip Routing Service:** Upon Request, Roadside Assistance can send you detailed, computer-personalized maps, highlighting your choice of either the most direct route or the most scenic route to your destination, anywhere in North America, along with any helpful travel information we may have pertaining to your trip. To request this service, please call us toll-free at 1-800-268-6800.

  We will make every attempt to send your personalized trip routing as quickly as possible, but it's best to allow three weeks before your planned departure date. Trip routing requests will be limited to six per calendar year.
- **Trip Interruption Benefits and Assistance:** In the event of a warranty related vehicle disablement, while en route and over 250 kilometres from original point of departure, you may qualify for trip interruption expense assistance. This assistance covers reasonable reimbursement of up to a maximum of $500 (Canadian) for (A) meals (maximum of $50/day), (B) lodging (maximum of $100/night) and (C) alternate ground transportation (maximum of $40/day). This benefit is to assist you with some of the unplanned expense you may incur while waiting for your vehicle to be repaired.

  Pre-authorization, original detailed receipts and a copy of the repair order are required.

  Once authorization has been given, your advisor will help you make any necessary arrangements and explain how to claim for trip interruption expense assistance.

Downloaded from www.Manualslib.com manuals search engine

- **Alternative Service:** There may be times, when Roadside Assistance cannot provide timely assistance, your advisor may authorize you to secure local emergency road service, and you will be reimbursed up to $100 upon submission of the original receipt to Roadside Assistance.

In many instances, mechanical failures are covered under Pontiac's Bumper-to-Bumper warranty, and the duration of the Base Warranty Coverage for Canadian customers of the new Vehicle Limited Warranty. However, any cost for parts and labor for non-warranty repairs are the responsibility of the driver.

For prompt and efficient assistance when calling, please provide the following to the Roadside Assistance Representative:

- Your name, home address, and home telephone number.
- Telephone number of your location.
- Location of the vehicle.
- Model, year, color, and license plate number of the vehicle.
- Odometer reading, Vehicle Identification Number (VIN), and delivery date of the vehicle.
- Description of the problem.

While we hope you never have the occasion to use our service, it is added security while traveling for you and your family. Remember, we are only a phone call away. Pontiac Roadside Assistance: **1-800-ROADSIDE (762-3743)**, text telephone (TTY) users, call **1-888-889-2438**, Canadian customers call **1-800-268-6800**.

Pontiac and General Motors of Canada Limited reserve the right to limit services or reimbursement to an owner or driver when, in their sole discretion, the claims become excessive in frequency or type of occurrence.

Roadside Assistance is not part of or included in the coverage provided by the New Vehicle Limited Warranty. Pontiac and General Motors of Canada Limited reserve the right to make any changes or discontinue the Roadside Assistance program at any time without notification.

Downloaded from www.Manualslib.com manuals search engine

Towing and Road Service Exclusions

Specifically excluded from Roadside Assistance coverage are towing or services for vehicles operated on a non-public roadway or highway, fines, impound towing caused by a violation of local, Municipal, State, Provincial, or Federal law, and mounting, dismounting or changing of snow tires, chains, or other traction devices.

Courtesy Transportation

To enhance your ownership experience, we and our participating dealers are proud to offer Courtesy Transportation, a customer support program for new vehicles.

For warranty repairs during the Bumper-to-Bumper (U.S.) or Base Warranty Coverage period (Canada), provided by the New Vehicle Limited Warranty, interim transportation may be available under the Courtesy Transportation program. Several courtesy transportation options are available to assist in reducing your inconvenience when warranty repairs are required.

Courtesy Transportation is not a part of the New Vehicle Limited Warranty and is available only at participating dealers. A separate booklet entitled "Warranty and Owner Assistance Information" furnished with each new vehicle provides detailed warranty coverage information.

Scheduling Service Appointments

When your vehicle requires warranty service, contact your dealer and request an appointment. By scheduling a service appointment and advising your service consultant of your transportation needs, your dealer can help minimize your inconvenience.

If your vehicle cannot be scheduled into the service department immediately, keep driving it until it can be scheduled for service, unless, of course, the problem is safety-related. If it is, please call your dealership, let them know this, and ask for instructions.

If the dealer requests that you simply drop the vehicle off for service, you are urged to do so as early in the work day as possible to allow for the same day repair.

Downloaded from www.Manualslib.com manuals search engine

Transportation Options

Warranty service can generally be completed while you wait. However, if you are unable to wait, GM helps to minimize your inconvenience by providing several transportation options. Depending on the circumstances, your dealer can offer you one of the following:

Shuttle Service

Shuttle service is the preferred means of offering Courtesy Transportation and participating dealers can provide you with shuttle service to get you to your destination with minimal interruption of your daily schedule. This includes one-way or round trip shuttle service within reasonable time and distance parameters for the dealer's area.

Public Transportation or Fuel Reimbursement

If your vehicle requires overnight warranty repairs, and public transportation is used as 'shuttle service,' the reimbursement is limited to the associated shuttle allowance and must be supported by original receipts.

In addition, for U.S. customers, should you arrange transportation through a friend or relative, limited reimbursement for reasonable fuel expenses may be available. Claim amounts should reflect actual costs and be supported by original receipts.

Courtesy Rental Vehicle

Your dealer may arrange to provide you with a courtesy rental vehicle or reimburse you for a rental vehicle that you obtain if your vehicle is kept for an overnight warranty repair. Rental reimbursement will be limited and must be supported by original receipts. This requires that you sign and complete a rental agreement and meet state/provincial, local, and rental vehicle provider requirements. Requirements vary and may include minimum age requirements, insurance coverage, credit card, etc. You are responsible for fuel usage charges and may also be responsible for taxes, levies, usage fees, excessive mileage, or rental usage beyond the completion of the repair.

Generally it is not possible to provide a like-vehicle as a courtesy rental.

Downloaded from www.Manualslib.com manuals search engine

Additional Program Information

All program options, such as shuttle service, may not be available at every dealer. Please contact your dealer for specific information about availability. All Courtesy Transportation arrangements will be administered by appropriate dealer personnel.

General Motors reserves the right to unilaterally modify, change or discontinue Courtesy Transportation at any time and to resolve all questions of claim eligibility pursuant to the terms and conditions described herein at its sole discretion.

Vehicle Data Collection and Event Data Recorders

Your vehicle, like other modern motor vehicles, has a number of sophisticated computer systems that monitor and control several aspects of the vehicle's performance. Your vehicle uses on-board vehicle computers to monitor emission control components to optimize fuel economy, to monitor conditions for airbag deployment and, if the vehicle has the Anti-lock Brake System (ABS), to provide anti-lock braking and to help the driver control the vehicle in difficult driving situations. Some information may be stored during regular operations to facilitate repair of detected malfunctions; other information is stored only in a crash event by computer systems, such as those commonly called Event Data Recorders (EDR).

Downloaded from www.Manualslib.com manuals search engine

In a crash event, computer systems, such as the airbag Sensing and Diagnostic Module (SDM) in your vehicle may record information about the condition of the vehicle and how it was operated, such as data related to engine speed, brake application, throttle position, vehicle speed, safety belt usage, airbag readiness, airbag performance, and the severity of a collision. This information has been used to improve vehicle crash performance and may be used to improve crash performance of future vehicles and driving safety. Unlike the data recorders on many airplanes, these on-board systems do not record sounds, such as conversation of vehicle occupants.

To read this information, special equipment is needed and access to the vehicle or the device that stores the data is required. GM will not access information about a crash event or share it with others other than:

- with the consent of the vehicle owner or, if the vehicle is leased, with the consent of the lessee,
- in response to an official request of police or similar government office,
- as part of GM's defense of litigation through the discovery process, or
- as required by law.

In addition, once GM collects or receives data, GM may:

- use the data for GM research needs,
- make it available for research where appropriate confidentiality is to be maintained and need is shown, or
- share summary data which is not tied to a specific vehicle with non-GM organizations for research purposes.

Others, such as law enforcement, may have access to the special equipment that can read the information if they have access to the vehicle or the device that stores the data.

If your vehicle has OnStar®, please check the OnStar® subscription service agreement or manual for information on its operations and data collection.

Downloaded from www.Manualslib.com manuals search engine

Collision Damage Repair

If your vehicle is involved in a collision and it is damaged, have the damage repaired by a qualified technician using the proper equipment and quality replacement parts. Poorly performed collision repairs will diminish your vehicle's resale value, and safety performance can be compromised in subsequent collisions.

Collision Parts

Genuine GM Collision parts are new parts made with the same materials and construction methods as the parts with which your vehicle was originally built. Genuine GM Collision parts are your best choice to assure that your vehicle's designed appearance, durability, and safety are preserved. The use of Genuine GM parts can help maintain your GM New Vehicle Warranty.

Recycled original equipment parts may also be used for repair. These parts are typically removed from vehicles that were total losses in prior accidents. In most cases, the parts being recycled are from undamaged sections of the vehicle. A recycled original equipment GM part, may be an acceptable choice to maintain your vehicle's originally designed appearance and safety performance, however, the history of these parts is not known. Such parts are not covered by your GM New Vehicle Limited Warranty, and any related failures are not covered by that warranty.

Aftermarket collision parts are also available. These are made by companies other than GM and may not have been tested for your vehicle. As a result, these parts may fit poorly, exhibit premature durability/corrosion problems, and may not perform properly in subsequent collisions. Aftermarket parts are not covered by your GM New Vehicle Limited Warranty, and any vehicle failure related to such parts are not covered by that warranty.

Downloaded from www.Manualslib.com manuals search engine

Repair Facility

GM also recommends that you choose a collision repair facility that meets your needs before you ever need collision repairs. Your GM dealer may have a collision repair center with GM-trained technicians and state of the art equipment, or be able to recommend a collision repair center that has GM-trained technicians and comparable equipment.

Insuring Your Vehicle

Protect your investment in your GM vehicle with comprehensive and collision insurance coverage. There are significant differences in the quality of coverage afforded by various insurance policy terms. Many insurance policies provide reduced protection to your GM vehicle by limiting compensation for damage repairs by using aftermarket collision parts. Some insurance companies will not specify aftermarket collision parts. When purchasing insurance, we recommend that you assure your vehicle will be repaired with GM original equipment collision parts. If such insurance coverage is not available from your current insurance carrier, consider switching to another insurance carrier.

If your vehicle is leased, the leasing company may require you to have insurance that assures repairs with Genuine GM Original Equipment Manufacturer (OEM) parts or Genuine Manufacturer replacement parts. Read your lease carefully, as you may be charged at the end of your lease for poor quality repairs.

If an Accident Occurs

Here is what to do if you are involved in an accident.

- Try to relax and then check to make sure you are all right. If you are uninjured, make sure that no one else in your vehicle, or the other vehicle, is injured.
- If there has been an injury, call 911 for help. Do not leave the scene of an accident until all matters have been taken care of. Move your vehicle only if its position puts you in danger or you are instructed to move it by a police officer.
- Give only the necessary and requested information to police and other parties involved in the accident. Do not discuss your personal condition, mental frame of mind, or anything unrelated to the accident. This will help guard against post-accident legal action.

Downloaded from www.Manualslib.com manuals search engine

- If you need roadside assistance, call GM Roadside Assistance. See *Roadside Assistance Program on page 368* for more information.
- If your vehicle cannot be driven, know where the towing service will be taking it. Get a card from the tow truck operator or write down the driver's name, the service's name, and the phone number.
- Remove any valuables from your vehicle before it is towed away. Make sure this includes your insurance information and registration if you keep these items in your vehicle.
- Gather the important information you will need from the other driver. Things like name, address, phone number, driver's license number, vehicle license plate, vehicle make, model and model year, Vehicle Identification Number (VIN), insurance company and policy number, and a general description of the damage to the other vehicle.
- If possible, call your insurance company from the scene of the accident. They will walk you through the information they will need. If they ask for a police report, phone or go to the police department headquarters the next day and you can get a copy of the report for a nominal fee. In some states/provinces with "no fault" insurance laws, a report may not be necessary. This is especially true if there are no injuries and both vehicles are driveable.
- Choose a reputable collision repair facility for your vehicle. Whether you select a GM dealer or a private collision repair facility to fix the damage, make sure you are comfortable with them. Remember, you will have to feel comfortable with their work for a long time.
- Once you have an estimate, read it carefully and make sure you understand what work will be performed on your vehicle. If you have a question, ask for an explanation. Reputable shops welcome this opportunity.

Downloaded from www.Manualslib.com manuals search engine

Managing the Vehicle Damage Repair Process

In the event that your vehicle requires damage repairs, GM recommends that you take an active role in its repair. If you have a pre-determined repair facility of choice, take your vehicle there, or have it towed there. Specify to the facility that any required replacement collision parts be original equipment parts, either new Genuine GM parts or recycled original GM parts. Remember, recycled parts will not be covered by your GM vehicle warranty.

Insurance pays the bill for the repair, but you must live with the repair. Depending on your policy limits, your insurance company may initially value the repair using aftermarket parts. Discuss this with your repair professional, and insist on Genuine GM parts. Remember if your vehicle is leased you may be obligated to have the vehicle repaired with Genuine GM parts, even if your insurance coverage does not pay the full cost.

If another party's insurance company is paying for the repairs, you are not obligated to accept a repair valuation based on that insurance company's collision policy repair limits, as you have no contractual limits with that company. In such cases, you can have control of the repair and parts choices as long as cost stays within reasonable limits.

Downloaded from www.Manualslib.com manuals search engine

Reporting Safety Defects

Reporting Safety Defects to the United States Government

If you believe that your vehicle has a defect which could cause a crash or could cause injury or death, you should immediately inform the National Highway Traffic Safety Administration (NHTSA), in addition to notifying General Motors.

If NHTSA receives similar complaints, it may open an investigation, and if it finds that a safety defect exists in a group of vehicles, it may order a recall and remedy campaign. However, NHTSA cannot become involved in individual problems between you, your dealer, or General Motors.

To contact NHTSA, you may call the Vehicle Safety Hotline toll-free at 1-888-327-4236 (TTY: 1-800-424-9153); go to http://www.safercar.gov; or write to:

Administrator, NHTSA
400 Seventh Street, SW.
Washington, D.C. 20590

You can also obtain other information about motor vehicle safety from http://www.safercar.gov.

Reporting Safety Defects to the Canadian Government

If you live in Canada, and you believe that your vehicle has a safety defect, you should immediately notify Transport Canada, in addition to notifying General Motors of Canada Limited. You may call them at 1-800-333-0510 or write to:

Transport Canada
Road Safety Branch
2780 Sheffield Road
Ottawa, Ontario K1B 3V9

Reporting Safety Defects to General Motors

In addition to notifying NHTSA (or Transport Canada) in a situation like this, we certainly hope you'll notify us. Please call us at 1-800-762-2737, or write:

Pontiac Customer Assistance Center
P.O. Box 33172
Detroit, MI 48232-5172

Downloaded from www.Manualslib.com manuals search engine

In Canada, please call us at 1-800-263-3777 (English) or 1-800-263-7854 (French). Or, write:

General Motors of Canada Limited
Customer Communication Centre, CA1-163-005
1908 Colonel Sam Drive
Oshawa, Ontario L1H 8P7

Service Publications Ordering Information

Service Manuals

Service Manuals have the diagnosis and repair information on engines, transmission, axle suspension, brakes, electrical, steering, body, etc.

Transmission, Transaxle, Transfer Case Unit Repair Manual

This manual provides information on unit repair service procedures, adjustments, and specifications for GM transmissions, transaxles, and transfer cases.

Service Bulletins

Service Bulletins give technical service information needed to knowledgeably service General Motors cars and trucks. Each bulletin contains instructions to assist in the diagnosis and service of your vehicle.

In Canada, the service bulletin reference number can be obtained by contacting your General Motors dealer or by calling 1-800-GM-DRIVE (1-800-463-7483). This reference number is needed to order the service bulletin from Helm, Inc.

RETAIL SELL PRICE: $6.00 US + Processing Fee

Downloaded from www.Manualslib.com manuals search engine

Owner Information

Owner publications are written specifically for owners and intended to provide basic operational information about the vehicle. The owner manual will include the Maintenance Schedule for all models.

In-Portfolio: Includes a Portfolio, Owner Manual, and Warranty Booklet.

RETAIL SELL PRICE: $35.00 US + Processing Fee

Without Portfolio: Owner's Manual only.

RETAIL SELL PRICE: $25.00 US + Processing Fee

Current and Past Model Order Forms

Technical Service Bulletins and Manuals are available for current and past model GM vehicles. To request an order form, please specify year and model name of the vehicle.

ORDER TOLL FREE: 1-800-551-4123
Monday-Friday 8:00 AM - 6:00 PM
Eastern Time

For Credit Card Orders Only (VISA-MasterCard-Discover), visit Helm, Inc. on the World Wide Web at: www.helminc.com

Or you can write to:

Helm, Incorporated
P.O. Box 07130
Detroit, MI 48207

Prices are subject to change without notice and without incurring obligation. Allow ample time for delivery.

Note to Canadian Customers: All listed prices are quoted in U.S. funds. Canadian residents are to make checks payable in U.S. funds.

Downloaded from www.Manualslib.com manuals search engine

NOTES

Downloaded from www.Manualslib.com manuals search engine

A

Accessories and Modifications 235
Accessory Power Outlet(s) 121
Adding Equipment to Your Airbag-Equipped Vehicle 55
Additives, Fuel 238
Add-On Electrical Equipment 326
Air Cleaner/Filter, Engine 254
Air Conditioning 122
Airbag
  Passenger Status Indicator 132
  Readiness Light 131
Airbag Sensing and Diagnostic Module (SDM) 373
Airbag System 42
  Adding Equipment to Your Airbag-Equipped Vehicle 55
  How Does an Airbag Restrain? 48
  Passenger Sensing System 50
  Servicing Your Airbag-Equipped Vehicle 54
  What Makes an Airbag Inflate? 48
  What Will You See After an Airbag Inflates? 48
  When Should an Airbag Inflate? 47
  Where Are the Airbags? 45
Antenna, Fixed Mast 187
Antenna, XM™ Satellite Radio Antenna System 187
Anti-Lock Brake System (ABS) 195
Anti-Lock Brake, System Warning Light 135
Appearance Care
  Aluminum or Chrome-Plated Wheels 321
  Care of Safety Belts 317
  Chemical Paint Spotting 323
  Cleaning Exterior Lamps/Lenses 318
  Cleaning the Inside of Your Vehicle 314
  Convertible Top 320
  Fabric/Carpet 315
  Finish Care 319
  Finish Damage 322
  Instrument Panel, Vinyl, and Other Plastic Surfaces 317
  Leather 316
  Sheet Metal Damage 322
  Tires 322
  Underbody Maintenance 323
  Vehicle Care/Appearance Materials 324
  Washing Your Vehicle 318
  Weatherstrips 317
  Windshield and Wiper Blades 320
Ashtray(s) 122

Downloaded from www.Manualslib.com manuals search engine

Audio System(s) 157
Audio Steering Wheel Controls 185
Care of Your CD Player 187
Care of Your CDs 187
Fixed Mast Antenna 187
Radio with CD 161, 166
Setting the Time 158, 159
Theft-Deterrent Feature 185
Understanding Radio Reception 186
XM™ Satellite Radio Antenna System 187
Automatic Door Lock 67
Automatic Door Unlock 67
Automatic Transmission
Fluid 256
Operation 82

B

Battery 273
Run-Down Protection 121
Before Leaving on a Long Trip 216
Brake
Anti-Lock Brake System (ABS) 195
Emergencies 197
Parking 86
System Inspection 352
System Warning Light 134
Brakes 270
Braking 194
Braking in Emergencies 197
Break-In, New Vehicle 76
Bulb Replacement 280
Back-Up Lamps 282
Front Turn Signal, Parking and
Fog Lamps 281
Halogen Bulbs 280
Headlamps 280
License Plate Lamps 282
Replacement Bulbs 283
Taillamps, Turn Signal, and Stoplamps 281
Buying New Tires 296

C

California Fuel 238
California Proposition 65 Warning 236
Canadian Owners 3
Capacities and Specifications 332
Carbon Monoxide 68, 91, 220, 231
Care of
Safety Belts 317
Your CD Player 187
Your CDs 187
CD, MP3 176

Downloaded from www.Manualslib.com manuals search engine

Center Console Storage Area 99
Chains, Tire 302
Charging System Light 134
Check
  Engine Light 138
Checking Things Under the Hood 242
Chemical Paint Spotting 323
Child Restraints
  Child Restraint Systems 33
  Infants and Young Children 30
  Lower Anchors and Tethers for Children 37
  Older Children 27
  Securing a Child Restraint in the
    Passenger Seat Position 38
Cigarette Lighter 122
Cleaning
  Aluminum or Chrome-Plated Wheels 321
  Convertible Top 320
  Exterior Lamps/Lenses 318
  Fabric/Carpet 315
  Finish Care 319
  Inside of Your Vehicle 314
  Instrument Panel, Vinyl, and
    Other Plastic Surfaces 317
  Leather 316
  Tires 322
Cleaning (cont.)
  Underbody Maintenance 323
  Washing Your Vehicle 318
  Weatherstrips 317
  Windshield and Wiper Blades 320
Climate Control System 122
  Outlet Adjustment 126
Clutch, Hydraulic 256
Collision Damage Repair 375
Content Theft-Deterrent 72
Control of a Vehicle 194
Convertible Top 99
Coolant
  Engine Temperature Warning Light 137
  Low Warning Light 138
  Surge Tank Pressure Cap 260
Cooling System 262
Cruise Control 115
Cupholder(s) 98
Customer Assistance Information
  Courtesy Transportation 371
  Customer Assistance for Text
    Telephone (TTY) Users 366
  Customer Assistance Offices 366
  Customer Satisfaction Procedure 362
  GM Mobility Reimbursement Program 367

Downloaded from www.Manualslib.com manuals search engine

Customer Assistance Information (cont.)
Reporting Safety Defects to General Motors 379
Reporting Safety Defects to the Canadian Government 379
Reporting Safety Defects to the United States Government 379
Roadside Assistance Program 368
Service Publications Ordering Information 380

D

Daytime Running Lamps 119
Defensive Driving 190
Delayed Locking 66
Disc, MP3 176
Doing Your Own Service Work 236
Door
Automatic Door Lock 67
Automatic Door Unlock 67
Delayed Locking 66
Manual Door Locks 65
Power Door Locks 66
Driver
Position, Safety Belt 18
Driver Information Center (DIC) 145
DIC Operation and Displays 146
DIC Vehicle Personalization 152
DIC Warnings and Messages 148
Driving
At Night 209
City 214
Defensive 190
Drunken 191
Freeway 215
Hill and Mountain Roads 218
In Rain and on Wet Roads 211
Rocking Your Vehicle to Get it Out 225
Winter 220

E

Electrical System
Add-On Equipment 326
Floor Console Fuse Block 327
Fuses and Circuit Breakers 326
Headlamp Wiring 326
Power Windows and Other Power Options 326
Underhood Fuse Block 329
Electronic Stability Control 200

Downloaded from www.Manualslib.com manuals search engine

Electronic Stability Control Indicator Light 136
Engine
Air Cleaner/Filter 254
Battery 273
Check and Service Engine Soon Light 138
Coolant 257
Coolant Temperature Warning Light 137
Cooling System Inspection 352
Drive Belt Routing 356
Engine Compartment Overview 244
Exhaust 91
Oil 247
Oil Life System 252
Overheating 260
Reduced Power Light 143
Starting 80
Entry/Exit Lighting 120
Event Data Recorders (EDR) 373
Extender, Safety Belt 26

F

Filter
Engine Air Cleaner 254
Finish Damage 322
Fixed Mast Antenna 187
Flashers, Hazard Warning 110
Flash-to-Pass 113
Flat Tire 302
Fluid
Automatic Transmission 256
Manual Transmission 256
Power Steering 268
Windshield Washer 269
Fog Lamps 120
Fuel 237
Additives 238
California Fuel 238
Filling a Portable Fuel Container 242
Filling Your Tank 240
Fuels in Foreign Countries 239
Gage 144
Gasoline Octane 237
Gasoline Specifications 237
Low Warning Light 145
System Inspection 351
Fuses
Floor Console Fuse Block 327
Fuses and Circuit Breakers 326
Underhood Fuse Block 329

Downloaded from www.Manualslib.com manuals search engine

G

Gage
- Fuel 144
- Speedometer 129
- Tachometer 129

Gasoline
- Octane 237
- Specifications 237

Glove Box 98
GM Mobility Reimbursement Program 367

H

Hazard Warning Flashers 110
Headlamp Wiring 326
Headlamps 118, 280
- Bulb Replacement 280
- Daytime Running Lamps 119
- Flash-to-Pass 113
- Front Turn Signal, Parking and Fog Lamps 281
- Halogen Bulbs 280
- High/Low Beam Changer 112
- On Reminder 119

Heater 122
Highbeam On Light 143
Highway Hypnosis 217
Hill and Mountain Roads 218
Hood
- Checking Things Under 242
- Release 243

Horn 110
How to Use This Manual 4
How to Wear Safety Belts Properly 18
Hydraulic Clutch 256

I

Ignition Positions 77
Infants and Young Children, Restraints 30
Inflation - Tire Pressure 292
Inflator Kit, Tire 303
Inspection
- Brake System 352
- Engine Cooling System 352
- Exhaust System 351
- Fuel System 351
- Part C - Periodic Maintenance 351
- Steering and Suspension 351
- Throttle System 352

Downloaded from www.Manualslib.com manuals search engine

Instrument Panel
Overview 108
Instrument Panel (I/P)
Brightness 120
Cluster 128

J

Jump Starting 274

K

Keyless Entry System 61
Keys 60

L

Labeling, Tire Sidewall 286
Lamps
Battery Run-Down Protection 121
Fog 120
Mirror Reading 120
LATCH System
Child Restraints 37
Latches, Seatback 11
License Plate Lamps 282
Lift Seat, Power 12
Light
Airbag Readiness 131
Anti-Lock Brake System Warning 135
Brake System Warning 134
Charging System 134
Electronic Stability Control 136
Engine Coolant Temperature Warning 137
Highbeam On 143
Low Coolant Warning 138
Low Fuel Warning 145
Malfunction Indicator 138
Oil Pressure 142
Passenger Airbag Status Indicator 132
Passenger Safety Belt Reminder 130
Reduced Engine Power 143
Safety Belt Reminder 130
Security 143
Service Vehicle Soon 144
Traction Control System 136
Trunk Ajar 144
Lighting
Entry/Exit 120
Limited-Slip Rear Axle 200

Downloaded from www.Manualslib.com manuals search engine

Loading Your Vehicle 226
Locks
Automatic Door Lock 67
Automatic Door Unlock 67
Delayed Locking 66
Manual Door 65
Power Door 66
Loss of Control 208
Low Coolant Warning Light 138
Low Fuel Warning Light 145

M

Maintenance Schedule
At Each Fuel Fill 346
At Least Once a Month 346
At Least Once a Year 348
At Least Twice a Year 347
Brake System Inspection 352
Engine Cooling System Inspection 352
Exhaust System Inspection 351
Fuel System Inspection 351
How This Section is Organized 334
Introduction 334
Maintenance Requirements 334
Maintenance Schedule (cont.)
Normal Maintenance Replacement Parts 355
Part A - Scheduled Maintenance Services 336
Part B - Owner Checks and Services 346
Part C - Periodic Maintenance Inspections 351
Part D - Recommended Fluids and Lubricants 353
Part E - Maintenance Record 357
Scheduled Maintenance 337
Steering and Suspension Inspection 351
Throttle System Inspection 352
Using 336
Your Vehicle and the Environment 334
Malfunction Indicator Light 138
Manual Seats 8
Manual Transmission
Fluid 256
Operation 85
Manual Windows 71
Message
DIC Warnings and Messages 148
Mirror Reading Lamps 120

Downloaded from www.Manualslib.com manuals search engine

Mirrors
Manual Rearview Mirror 93
Manual Rearview Mirror with OnStar® 93
Outside Manual Mirror 93
Outside Power Mirrors 94
MP3 176
MyGMLink.com 365

N

New Vehicle Break-In 76
Normal Maintenance Replacement Parts 355

O

Odometer 129
Off-Road Recovery 206
Oil
Engine 247
Pressure Light 142
Oil, Engine Oil Life System 252
Older Children, Restraints 27
Online Owner Center 365
OnStar® System, see OnStar® Manual 94
Other Warning Devices 110
Outlet Adjustment 126
Outlet(s), Accessory Power 121
Outside
Manual Mirror 93
Power Mirrors 94
Owners, Canadian 3

P

Paint, Damage 322
Park (P)
Shifting Into 87
Shifting Out of 89
Parking
Brake 86
Over Things That Burn 90
Parking Your Vehicle 89
Part A - Scheduled Maintenance Services 336
Part B - Owner Checks and Services 346
Part C - Periodic Maintenance
Inspections 351
Part D - Recommended Fluids and
Lubricants 353
Part E - Maintenance Record 357
Passenger Airbag Status Indicator 132

Downloaded from www.Manualslib.com manuals search engine

Passenger Position, Safety Belts 26
Passenger Sensing System 50
Passing 206
PASS-Key® III+ 74
PASS-Key® III+ Operation 74
Power
  Accessory Outlet(s) 121
  Door Locks 66
  Electrical System 326
  Lift Seat 12
  Reduced Engine Light 143
  Retained Accessory (RAP) 80
  Steering Fluid 268
  Windows 71
Pretensioners, Safety Belt 26

Q

Questions and Answers About
  Safety Belts 17

R

Radios 157
  Care of Your CD Player 187
  Care of Your CDs 187
  Radio with CD 161, 166
  Setting the Time 158, 159
  Theft-Deterrent 185
  Understanding Reception 186
Rear Axle 279
  Limited-Slip 200
Rearview Mirror with OnStar® 93
Rearview Mirrors 93
Reclining Seatbacks 9
Recreational Vehicle Towing 231
Reduced Engine Power Light 143
Remote Keyless Entry (RKE) System 61
Remote Keyless Entry (RKE)
  System, Operation 62
Replacement Bulbs 283

Downloaded from www.Manualslib.com manuals search engine

Reporting Safety Defects
Canadian Government 379
General Motors 379
United States Government 379
Restraint System Check
Checking the Restraint Systems 56
Replacing Restraint System Parts
After a Crash 57
Retained Accessory Power (RAP) 80
Roadside
Assistance Program 368
Rocking Your Vehicle to Get it Out 225
Routing, Engine Drive Belt 356
Running the Engine While Parked 92

S

Safety Belt
Passenger Reminder Light 130
Pretensioners 26
Reminder Light 130
Safety Belts
Care of 317
Driver Position 18
Safety Belts (cont.)
How to Wear Safety Belts Properly 18
Passenger Position 26
Questions and Answers About
Safety Belts 17
Safety Belt Extender 26
Safety Belt Use During Pregnancy 25
Safety Belts Are for Everyone 12
Safety Warnings and Symbols 4
Scheduled Maintenance 337
Seatback Latches 11
Seats
Manual 8
Power Lift Seat 12
Reclining Seatbacks 9
Seatback Latches 11
Securing a Child Restraint
Passenger Seat Position 38
Security Light 143
Service 235
Accessories and Modifications 235
Adding Equipment to the Outside
of Your Vehicle 237
California Proposition 65 Warning 236

Downloaded from www.Manualslib.com manuals search engine

Service (cont.)
Doing Your Own Work 236
Engine Soon Light 138
Publications Ordering Information 380
Vehicle Soon Light 144
Servicing Your Airbag-Equipped Vehicle 54
Setting the Time 158, 159
Sheet Metal Damage 322
Shifting Into Park (P) 87
Shifting Out of Park (P) 89
Signals, Turn and Lane-Change 112
Specifications, Capacities 332
Speedometer 129
Starting Your Engine 80
Steering 203
Steering and Suspension Inspection 351
Steering Wheel Controls, Audio 185
Steering Wheel, Tilt Wheel 111
Storage Areas
Center Console Storage Area 99
Cupholder(s) 98
Glove Box 98
Stuck in Sand, Mud, Ice, or Snow 224
Sun Visors 71

T

Tachometer 129
Taillamps
Turn Signal, and Stoplamps 281
Theft-Deterrent, Radio 185
Theft-Deterrent Systems 72
Content Theft-Deterrent 72
PASS-Key® III+ 74
PASS-Key® III+ Operation 74
Throttle System Inspection 352
Tilt Wheel 111
Tires 284
Aluminum or Chrome-Plated Wheels, Cleaning 321
Buying New Tires 296
Chains 302
Cleaning 322
Different Size 297
If a Tire Goes Flat 302
Inflation - Tire Pressure 292
Inspection and Rotation 293
Tire Inflator Kit 303
Tire Sidewall Labeling 286

Downloaded from www.Manualslib.com manuals search engine

Tires (cont.)
Tire Terminology and Definitions 289
Uniform Tire Quality Grading 298
Wheel Alignment and Tire Balance 299
Wheel Replacement 299
When It Is Time for New Tires 295
Winter Tires 285
Towing
Recreational Vehicle 231
Towing a Trailer 231
Your Vehicle 231
Traction
Control System (TCS) 198
Limited-Slip Rear Axle 200
Traction Control System Warning Light 136
Transmission
Fluid, Automatic 256
Fluid, Manual 256
Transmission Operation, Automatic 82
Transmission Operation, Manual 85
Trunk 68
Trunk Ajar Light 144
Turn and Lane-Change Signals 112
Turn Signal/Multifunction Lever 111

U

Understanding Radio Reception 186
Uniform Tire Quality Grading 298

V

Vehicle
Control 194
Damage Warnings 5
Loading 226
Parking Your 89
Service Soon Light 144
Symbols 5
Vehicle Data Collection and Event
Data Recorders 373
Vehicle Identification
Number (VIN) 325
Service Parts Identification Label 325
Vehicle Personalization
DIC 152
Ventilation Adjustment 126
Visors 71

Downloaded from www.Manualslib.com manuals search engine

W

Warning Lights, Gages and Indicators 127
Warnings
DIC Warnings and Messages 148
Hazard Warning Flashers 110
Other Warning Devices 110
Safety and Symbols 4
Vehicle Damage 5
Wheels
Alignment and Tire Balance 299
Different Size 297
Replacement 299
Windows 70
Manual 71
Power 71
Windshield
Washer 114
Washer Fluid 269
Wiper Blade Replacement 283
Wiper Blades, Cleaning 320
Wipers 113
Winter Driving 220
Winter Tires 285

X

XM Radio Messages 183
XM™ Satellite Radio Antenna System 187

Y

Your Vehicle and the Environment 334

Downloaded from www.Manualslib.com manuals search engine