SECTION MIR
MIRRORS

A B C D E F G H I J K MIR M N O P

CONTENTS

PRECAUTION 2

PRECAUTIONS 2
Precaution for Supplemental Restraint System (SRS) "AIR BAG" and "SEAT BELT PRE-TENSIONER" 2
Precaution for Work 2

PREPARATION 3

PREPARATION 3
Special Service Tools 3
Commercial Service Tools 3

WIRING DIAGRAM 4

INSIDE MIRROR 4
Wiring Diagram - With Homelink Universal Transceiver 4
Wiring Diagram - Without Homelink Universal Transceiver 6

DOOR MIRROR 8
Wiring Diagram 8

SYMPTOM DIAGNOSIS 13

SQUEAK AND RATTLE TROUBLE DIAGNOSES 13
Work Flow 13
Generic Squeak and Rattle Troubleshooting 15
Diagnostic Worksheet 17

REMOVAL AND INSTALLATION 19

INSIDE MIRROR 19
Exploded View 19
Removal and Installation 19

DOOR MIRROR 20
Exploded View 20
Removal and Installation 20

DOOR MIRROR GLASS 22
Removal and Installation 22

DOOR MIRROR REAR FINISHER 23
Removal and Installation 23

DOOR MIRROR ACTUATOR 24
Removal and Installation 24

DOOR MIRROR REMOTE CONTROL SWITCH 25
Removal and Installation 25

PRECAUTION

PRECAUTIONS

Precaution for Supplemental Restraint System (SRS) "AIR BAG" and "SEAT BELT PRE-TENSIONER"

INFOID:0000000008707294

The Supplemental Restraint System such as “AIR BAG” and “SEAT BELT PRE-TENSIONER”, used along with a front seat belt, helps to reduce the risk or severity of injury to the driver and front passenger for certain types of collision. Information necessary to service the system safely is included in the SR and SB section of this Service Manual.

WARNING:

- **To avoid rendering the SRS inoperative, which could increase the risk of personal injury or death in the event of a collision which would result in air bag inflation, all maintenance must be performed by an authorized NISSAN/INFINITI dealer.**
- **Improper maintenance, including incorrect removal and installation of the SRS, can lead to personal injury caused by unintentional activation of the system. For removal of Spiral Cable and Air Bag Module, see the SR section.**
- **Do not use electrical test equipment on any circuit related to the SRS unless instructed to in this Service Manual. SRS wiring harnesses can be identified by yellow and/or orange harnesses or harness connectors.**

PRECAUTIONS WHEN USING POWER TOOLS (AIR OR ELECTRIC) AND HAMMERS

WARNING:

- **When working near the Airbag Diagnosis Sensor Unit or other Airbag System sensors with the Ignition ON or engine running, DO NOT use air or electric power tools or strike near the sensor(s) with a hammer. Heavy vibration could activate the sensor(s) and deploy the air bag(s), possibly causing serious injury.**
- **When using air or electric power tools or hammers, always switch the Ignition OFF, disconnect the battery and wait at least 3 minutes before performing any service.**

Precaution for Work

INFOID:0000000008743349

- When removing or disassembling each component, be careful not to damage or deform it. If a component may be subject to interference, be sure to protect it with a shop cloth.
- When removing (disengaging) components with a screwdriver or similar tool, be sure to wrap the component with a shop cloth or vinyl tape to protect it.
- Protect the removed parts with a shop cloth and prevent them from being dropped.
- Replace a deformed or damaged clip.
- If a part is specified as a non-reusable part, always replace it with a new one.
- Be sure to tighten bolts and nuts securely to the specified torque.
- After installation is complete, be sure to check that each part works properly.
- Follow the steps below to clean components:

- Water soluble dirt:
  - Dip a soft cloth into lukewarm water, wring the water out of the cloth and wipe the dirty area.
  - Then rub with a soft, dry cloth.
- Oily dirt:
  - Dip a soft cloth into lukewarm water with mild detergent (concentration: within 2 to 3%) and wipe the dirty area.
  - Then dip a cloth into fresh water, wring the water out of the cloth and wipe the detergent off.
  - Then rub with a soft, dry cloth.
- Do not use organic solvent such as thinner, benzene, alcohol or gasoline.
- For genuine leather seats, use a genuine leather seat cleaner.

PREPARATION

PREPARATION

Special Service Tools

INFOID:0000000007986728

The actual shapes of Kent-Moore tools may differ from those of special service tools illustrated here.

Tool number (Kent-Moore No.) Tool name		Description
— (J-39570) Chassis ear	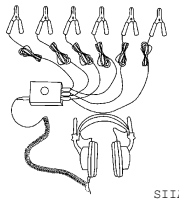	Locating the noise
— (J-46534) Trim Tool Set	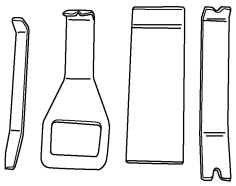	Removing trim components
— (J-43980) NISSAN Squeak and Rattle Kit	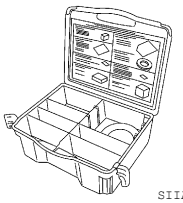	Repairing the cause of noise

Commercial Service Tools

INFOID:0000000007986729

(Kent-Moore No.) Tool name		Description
(J-39565) Engine ear	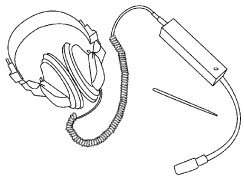	Locating the noise

WIRING DIAGRAM

INSIDE MIRROR

Wiring Diagram - With Homelink Universal Transceiver

INFOID:0000000008655950

INSIDE MIRROR - WITH HOMELINK UNIVERSAL TRANSCEIVER

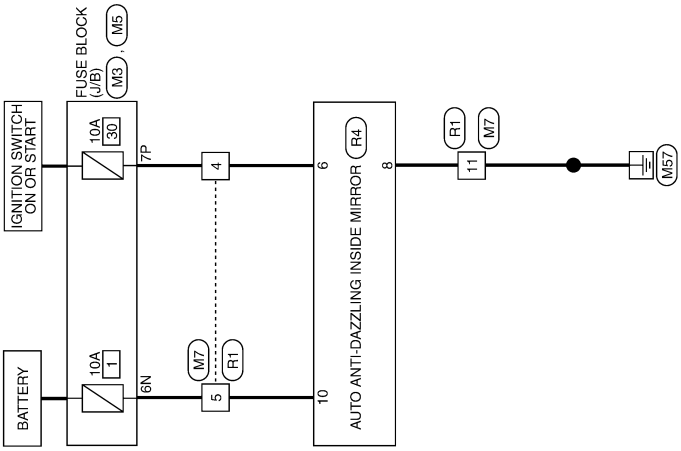

AALWA0465GB

INSIDE MIRROR CONNECTORS - WITH HOMELINK UNIVERSAL TRANSCEIVER

Connector No.	M3
Connector Name	FUSE BLOCK (J/B)
Connector Color	WHITE

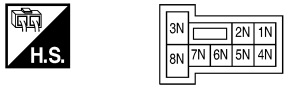

Terminal No.	Color of Wire	Signal Name
6N	W	–

Connector No.	M5
Connector Name	FUSE BLOCK (J/B)
Connector Color	WHITE

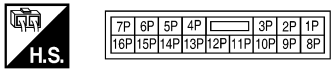

Terminal No.	Color of Wire	Signal Name
7P	G	–

Connector No.	M7
Connector Name	WIRE TO WIRE
Connector Color	WHITE

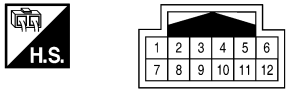

Terminal No.	Color of Wire	Signal Name
4	G	–
5	W	–
11	GR	–

Connector No.	R1
Connector Name	WIRE TO WIRE
Connector Color	WHITE

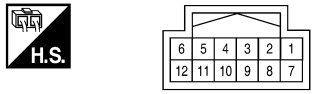

Terminal No.	Color of Wire	Signal Name
4	B/R	–
5	B/Y	–
11	B	–

Connector No.	R4
Connector Name	AUTO ANTI-DAZZLING INSIDE MIRROR (WITH HOMELINK UNIVERSAL TRANSCEIVER)
Connector Color	BLACK

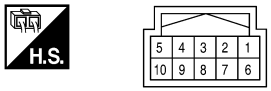

Terminal No.	Color of Wire	Signal Name
6	B/R	IGN
8	B	GND
10	B/Y	BAT +

AAL1A0757GB

Wiring Diagram - Without Homelink Universal Transceiver

INFOID:0000000007986720

INSIDE MIRROR - WITHOUT HOMELINK UNIVERSAL TRANSCEIVER

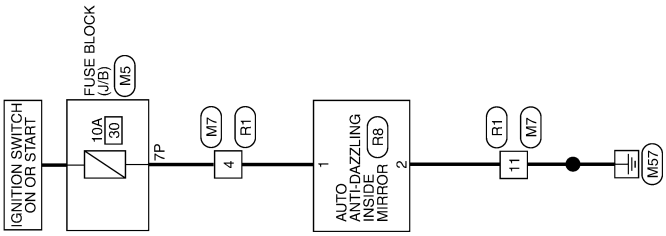

AALWA0464GB

INSIDE MIRROR CONNECTORS - WITHOUT HOMELINK UNIVERSAL TRANSCEIVER

Connector No.	M5
Connector Name	FUSE BLOCK (J/B)
Connector Color	WHITE

H.S.

Terminal No.	Color of Wire	Signal Name
7P	G	–

Connector No.	M7
Connector Name	WIRE TO WIRE
Connector Color	WHITE

H.S.

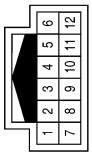

Terminal No.	Color of Wire	Signal Name
4	G	–
11	GR	–

Connector No.	R1
Connector Name	WIRE TO WIRE
Connector Color	WHITE

H.S.

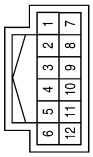

Terminal No.	Color of Wire	Signal Name
4	B/R	–
11	B	–

Connector No.	R8
Connector Name	AUTO ANTI-DAZZLING INSIDE MIRROR (WITHOUT HOMELINK UNIVERSAL TRANSCEIVER)
Connector Color	BLACK

H.S.

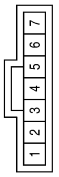

Terminal No.	Color of Wire	Signal Name
1	B/R	IGN
2	B	GND

AALIA0756GB

DOOR MIRROR

Wiring Diagram

INFOID:0000000007986722

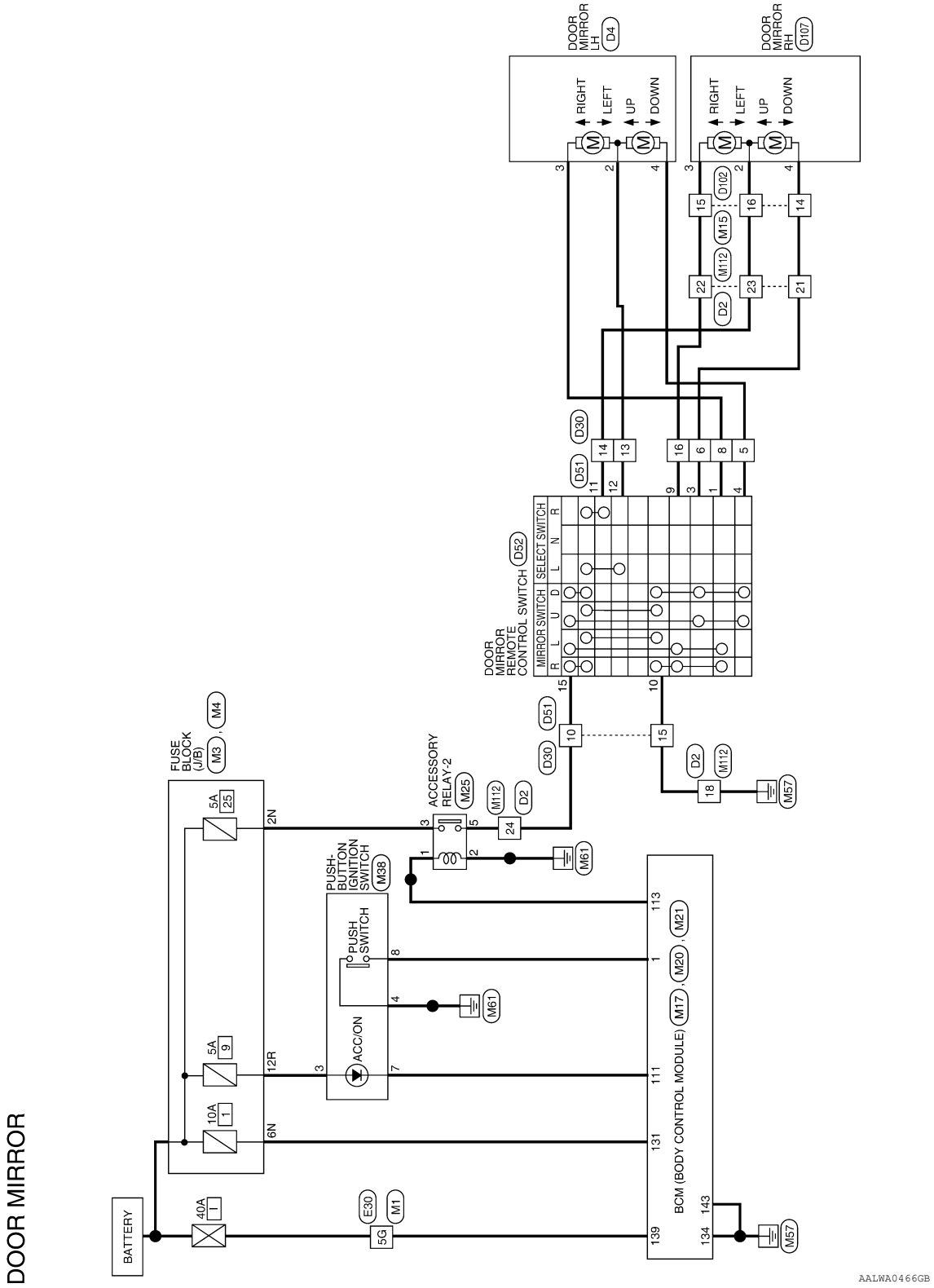

DOOR MIRROR CONNECTORS

Connector No.	M1
Connector Name	WIRE TO WIRE
Connector Color	WHITE

H.S.

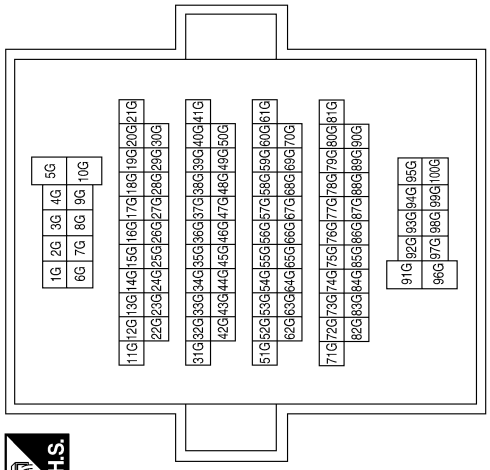

Terminal No.	Color of Wire	Signal Name
5G	W	–

Connector No.	M3
Connector Name	FUSE BLOCK (J/B)
Connector Color	WHITE

H.S.

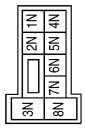

Terminal No.	Color of Wire	Signal Name
2N	LG	–
6N	W	–

Connector No.	M4
Connector Name	FUSE BLOCK (J/B)
Connector Color	BROWN

H.S.

Terminal No.	Color of Wire	Signal Name
12R	W	–

Connector No.	M15
Connector Name	WIRE TO WIRE
Connector Color	WHITE

H.S.

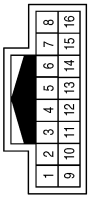

Terminal No.	Color of Wire	Signal Name
14	W	–
15	G	–
16	BG	–

Connector No.	M17
Connector Name	BCM (BODY CONTROL MODULE)
Connector Color	GREEN

H.S.

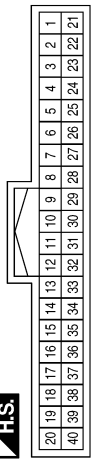

Terminal No.	Color of Wire	Signal Name
1	R	ENG START SW NO ESCL

AALIA0758GB

Connector No.	M20
Connector Name	BCM (BODY CONTROL MODULE)
Connector Color	BLACK

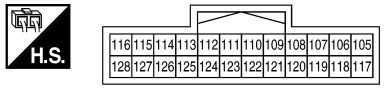

Terminal No.	Color of Wire	Signal Name
111	Y	ACC LED
113	P	ACC RELAY OUT

Connector No.	M21
Connector Name	BCM (BODY CONTROL MODULE)
Connector Color	WHITE

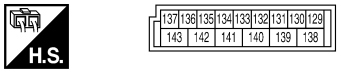

Terminal No.	Color of Wire	Signal Name
131	W	+BATTERY(FUSE)
134	B	GND2
139	W	BAT-POWER F/L
143	B	GND1

Connector No.	M25
Connector Name	ACCESSORY RELAY-2
Connector Color	BLUE

Terminal No.	Color of Wire	Signal Name
1	W	–
2	B	–
3	LG	–
5	P	–

Connector No.	M38
Connector Name	PUSH-BUTTON IGNITION SWITCH
Connector Color	WHITE

Terminal No.	Color of Wire	Signal Name
3	W	–
4	B	–
7	Y	–
8	R	–

Connector No.	M112
Connector Name	WIRE TO WIRE
Connector Color	WHITE

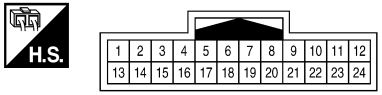

Terminal No.	Color of Wire	Signal Name
18	B	–
21	W	–
22	G	–
23	BG	–
24	P	–

AAL1A0759GB

Connector No.	E30
Connector Name	WIRE TO WIRE
Connector Color	WHITE

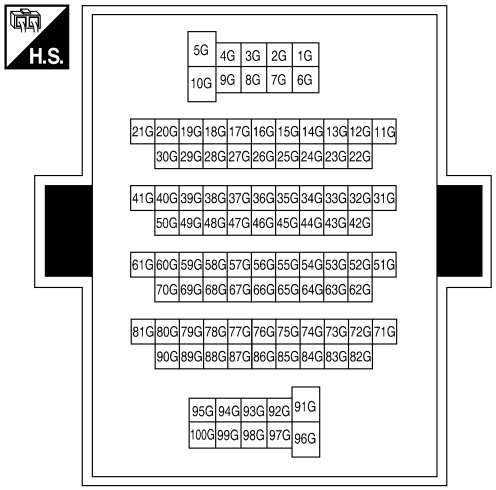

Terminal No.	Color of Wire	Signal Name
5G	P	–

Connector No.	D2
Connector Name	WIRE TO WIRE
Connector Color	WHITE

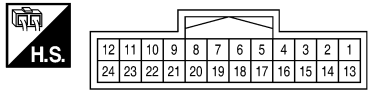

Terminal No.	Color of Wire	Signal Name
18	B	–
21	BG	–
22	P	–
23	W	–
24	G	–

Connector No.	D4
Connector Name	DOOR MIRROR LH
Connector Color	WHITE

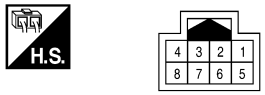

Terminal No.	Color of Wire	Signal Name
2	P	–
3	W	–
4	R	–

Connector No.	D30
Connector Name	WIRE TO WIRE
Connector Color	WHITE

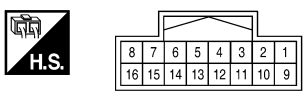

Terminal No.	Color of Wire	Signal Name
5	R	–
6	BG	–
8	W	–
10	G	–
13	P	–
14	W	–
15	B	–
16	P	–

AAIIA0760GB

Connector No.	D51
Connector Name	WIRE TO WIRE
Connector Color	WHITE

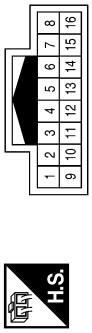

Terminal No.	Color of Wire	Signal Name
5	R	–
6	BR	–
8	W	–
10	G	–
13	P	–
14	W	–
15	B	–
16	GR	–

Connector No.	D52
Connector Name	DOOR MIRROR REMOTE CONTROL SWITCH
Connector Color	WHITE

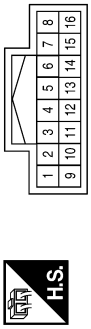

Terminal No.	Color of Wire	Signal Name
1	W	–
3	BR	–
4	R	–
9	GR	–
10	B	–
11	W	–
12	P	–
15	G	–

Connector No.	D102
Connector Name	WIRE TO WIRE
Connector Color	WHITE

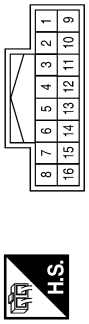

Terminal No.	Color of Wire	Signal Name
14	P	–
15	W	–
16	R	–

Connector No.	D107
Connector Name	DOOR MIRROR RH
Connector Color	WHITE

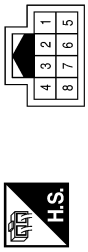

Terminal No.	Color of Wire	Signal Name
2	R	–
3	W	–
4	P	–

AALIA0761GB

SYMPTOM DIAGNOSIS

SQUEAK AND RATTLE TROUBLE DIAGNOSES

Work Flow

INFOID:0000000008743417

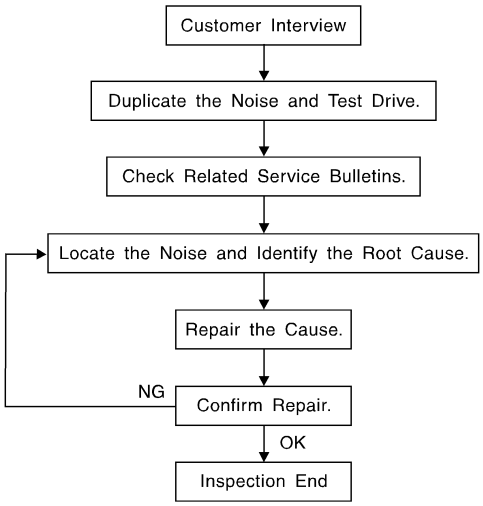

SBT842

CUSTOMER INTERVIEW

Interview the customer if possible, to determine the conditions that exist when the noise occurs. Use the Diagnostic Worksheet during the interview to document the facts and conditions when the noise occurs and any customer's comments; refer to MIR-17, "Diagnostic Worksheet". This information is necessary to duplicate the conditions that exist when the noise occurs.

- The customer may not be able to provide a detailed description or the location of the noise. Attempt to obtain all the facts and conditions that exist when the noise occurs (or does not occur).
- If there is more than one noise in the vehicle, be sure to diagnose and repair the noise that the customer is concerned about. This can be accomplished by test driving the vehicle with the customer.
- After identifying the type of noise, isolate the noise in terms of its characteristics. The noise characteristics are provided so the customer, service adviser and technician are all speaking the same language when defining the noise.
- Squeak —(Like tennis shoes on a clean floor)
  Squeak characteristics include the light contact/fast movement/brought on by road conditions/hard surfaces = higher pitch noise/softer surfaces = lower pitch noises/edge to surface = chirping.
- Creak—(Like walking on an old wooden floor)
  Creak characteristics include firm contact/slow movement/twisting with a rotational movement/pitch dependent on materials/often brought on by activity.
- Rattle—(Like shaking a baby rattle)
  Rattle characteristics include the fast repeated contact/vibration or similar movement/loose parts/missing clip or fastener/incorrect clearance.
- Knock —(Like a knock on a door)
  Knock characteristics include hollow sounding/sometimes repeating/often brought on by driver action.
- Tick—(Like a clock second hand)
  Tick characteristics include gentle contacting of light materials/loose components/can be caused by driver action or road conditions.
- Thump—(Heavy, muffled knock noise)
  Thump characteristics include softer knock/dead sound often brought on by activity.
- Buzz—(Like a bumble bee)
  Buzz characteristics include high frequency rattle/firm contact.
- Often the degree of acceptable noise level will vary depending upon the person. A noise that you may judge as acceptable may be very irritating to the customer.
- Weather conditions, especially humidity and temperature, may have a great effect on noise level.

DUPLICATE THE NOISE AND TEST DRIVE

If possible, drive the vehicle with the customer until the noise is duplicated. Note any additional information on the Diagnostic Worksheet regarding the conditions or location of the noise. This information can be used to duplicate the same conditions when you confirm the repair.
If the noise can be duplicated easily during the test drive, to help identify the source of the noise, try to duplicate the noise with the vehicle stopped by doing one or all of the following:
1) Close a door.
2) Tap or push/pull around the area where the noise appears to be coming from.
3) Rev the engine.
4) Use a floor jack to recreate vehicle “twist”.
5) At idle, apply engine load (electrical load, half-clutch on M/T model, drive position on CVT and A/T models).
6) Raise the vehicle on a hoist and hit a tire with a rubber hammer.
- Drive the vehicle and attempt to duplicate the conditions the customer states exist when the noise occurs.
- If it is difficult to duplicate the noise, drive the vehicle slowly on an undulating or rough road to stress the vehicle body.

CHECK RELATED SERVICE BULLETINS

After verifying the customer concern or symptom, check ASIST for Technical Service Bulletins (TSBs) related to that concern or symptom.
If a TSB relates to the symptom, follow the procedure to repair the noise.

LOCATE THE NOISE AND IDENTIFY THE ROOT CAUSE

1. Narrow down the noise to a general area. To help pinpoint the source of the noise, use a listening tool (Chassis Ear: J-39570, Engine Ear: J-39565 and mechanic's stethoscope).
2. Narrow down the noise to a more specific area and identify the cause of the noise by:
   - removing the components in the area that you suspect the noise is coming from.
     Do not use too much force when removing clips and fasteners, otherwise clips and fasteners can be broken or lost during the repair, resulting in the creation of new noise.
   - tapping or pushing/pulling the component that you suspect is causing the noise.
     Do not tap or push/pull the component with excessive force, otherwise the noise will be eliminated only temporarily.
   - feeling for a vibration with your hand by touching the component(s) that you suspect is (are) causing the noise.
   - placing a piece of paper between components that you suspect are causing the noise.
   - looking for loose components and contact marks.
     Refer to MIR-15, "Generic Squeak and Rattle Troubleshooting".

REPAIR THE CAUSE

- If the cause is a loose component, tighten the component securely.
- If the cause is insufficient clearance between components:
- separate components by repositioning or loosening and retightening the component, if possible.
- insulate components with a suitable insulator such as urethane pads, foam blocks, felt cloth tape or urethane tape. A NISSAN Squeak and Rattle Kit (J-43980) is available through your authorized NISSAN Parts Department.

CAUTION:
Do not use excessive force as many components are constructed of plastic and may be damaged.
Always check with the Parts Department for the latest parts information.
The following materials are contained in the NISSAN Squeak and Rattle Kit (J-43980). Each item can be ordered separately as needed.
URETHANE PADS [1.5 mm (0.059 in) thick]
Insulates connectors, harness, etc.
76268-9E005: 100×135 mm (3.94×5.31 in)/76884-71L01: 60×85 mm (2.36×3.35 in)/76884-71L02: 15×25 mm (0.59×0.98 in)
INSULATOR (Foam blocks)
Insulates components from contact. Can be used to fill space behind a panel.
73982-9E000: 45 mm (1.77 in) thick, 50×50 mm (1.97×1.97 in)/73982-50Y00: 10 mm (0.39 in) thick, 50×50 mm (1.97×1.97 in)
INSULATOR (Light foam block)
80845-71L00: 30 mm (1.18 in) thick, 30×50 mm (1.18×1.97 in)
FELT CLOTH TAPE
Used to insulate where movement does not occur. Ideal for instrument panel applications.
68370-4B000: 15×25 mm (0.59×0.98 in) pad/68239-13E00: 5 mm (0.20 in) wide tape roll. The following materials not found in the kit can also be used to repair squeaks and rattles.

UHMW (TEFLON) TAPE
Insulates where slight movement is present. Ideal for instrument panel applications.
SILICONE GREASE
Used instead of UHMW tape that will be visible or not fit.
Note: Will only last a few months.
SILICONE SPRAY
Use when grease cannot be applied.
DUCT TAPE
Use to eliminate movement.

CONFIRM THE REPAIR

Confirm that the cause of a noise is repaired by test driving the vehicle. Operate the vehicle under the same conditions as when the noise originally occurred. Refer to the notes on the Diagnostic Worksheet.

Generic Squeak and Rattle Troubleshooting

INFOID:0000000008743418

Refer to Table of Contents for specific component removal and installation information.

INSTRUMENT PANEL

Most incidents are caused by contact and movement between:

1. Cluster lid A and the instrument panel
2. Acrylic lens and combination meter housing
3. Instrument panel to front pillar finisher
4. Instrument panel to windshield
5. Instrument panel pins
6. Wiring harnesses behind the combination meter
7. A/C defroster duct and duct joint

These incidents can usually be located by tapping or moving the components to duplicate the noise or by pressing on the components while driving to stop the noise. Most of these incidents can be repaired by applying felt cloth tape or silicone spray (in hard to reach areas). Urethane pads can be used to insulate wiring harness.

CAUTION:
Do not use silicone spray to isolate a squeak or rattle. If you saturate the area with silicone, you will not be able to recheck the repair.

CENTER CONSOLE

Components to pay attention to include:

1. Shift selector assembly cover to finisher
2. A/C control unit and cluster lid C
3. Wiring harnesses behind audio and A/C control unit

The instrument panel repair and isolation procedures also apply to the center console.

DOORS

Pay attention to the:

1. Finisher and inner panel making a slapping noise
2. Inside handle escutcheon to door finisher
3. Wiring harnesses tapping
4. Door striker out of alignment causing a popping noise on starts and stops

Tapping or moving the components or pressing on them while driving to duplicate the conditions can isolate many of these incidents. You can usually insulate the areas with felt cloth tape or insulator foam blocks from the NISSAN Squeak and Rattle Kit (J-43980) to repair the noise.

TRUNK

Trunk noises are often caused by a loose jack or loose items put into the trunk by the owner.
In addition look for:

1. Trunk lid bumpers out of adjustment
2. Trunk lid striker out of adjustment
3. The trunk lid torsion bars knocking together

4. A loose license plate or bracket

Most of these incidents can be repaired by adjusting, securing or insulating the item(s) or component(s) causing the noise.

SUNROOF/HEADLINING

Noises in the sunroof/headlining area can often be traced to one of the following:

1. Sunroof lid, rail, linkage or seals making a rattle or light knocking noise
2. Sun visor shaft shaking in the holder
3. Front or rear windshield touching headlining and squeaking

Again, pressing on the components to stop the noise while duplicating the conditions can isolate most of these incidents. Repairs usually consist of insulating with felt cloth tape.

OVERHEAD CONSOLE (FRONT AND REAR)

Overhead console noises are often caused by the console panel clips not being engaged correctly. Most of these incidents are repaired by pushing up on the console at the clip locations until the clips engage.
In addition look for:

1. Loose harness or harness connectors.
2. Front console map/reading lamp lens loose.
3. Loose screws at console attachment points.

SEATS

When isolating seat noise it's important to note the position the seat is in and the load placed on the seat when the noise is present. These conditions should be duplicated when verifying and isolating the cause of the noise.
Cause of seat noise include:

1. Headrest rods and holder
2. A squeak between the seat pad cushion and frame
3. The rear seatback lock and bracket

These noises can be isolated by moving or pressing on the suspected components while duplicating the conditions under which the noise occurs. Most of these incidents can be repaired by repositioning the component or applying urethane tape to the contact area.

UNDERHOOD

Some interior noise may be caused by components under the hood or on the engine wall. The noise is then transmitted into the passenger compartment.
Causes of transmitted underhood noise include:

1. Any component installed to the engine wall
2. Components that pass through the engine wall
3. Engine wall mounts and connectors
4. Loose radiator installation pins
5. Hood bumpers out of adjustment
6. Hood striker out of adjustment

These noises can be difficult to isolate since they cannot be reached from the interior of the vehicle. The best method is to secure, move or insulate one component at a time and test drive the vehicle. Also, engine rpm or load can be changed to isolate the noise. Repairs can usually be made by moving, adjusting, securing, or insulating the component causing the noise.

Diagnostic Worksheet

INFOID:0000000008743419

Dear Customer:
We are concerned about your satisfaction with your vehicle. Repairing a squeak or rattle sometimes can be very difficult. To help us fix your vehicle right the first time, please take a moment to note the area of the vehicle where the squeak or rattle occurs and under what conditions. You may be asked to take a test drive with a service advisor or technician to ensure we confirm the noise you are hearing.

SQUEAK & RATTLE DIAGNOSTIC WORKSHEET

I. WHERE DOES THE NOISE COME FROM? (circle the area of the vehicle)
The illustrations are for reference only, and may not reflect the actual configuration of your vehicle.

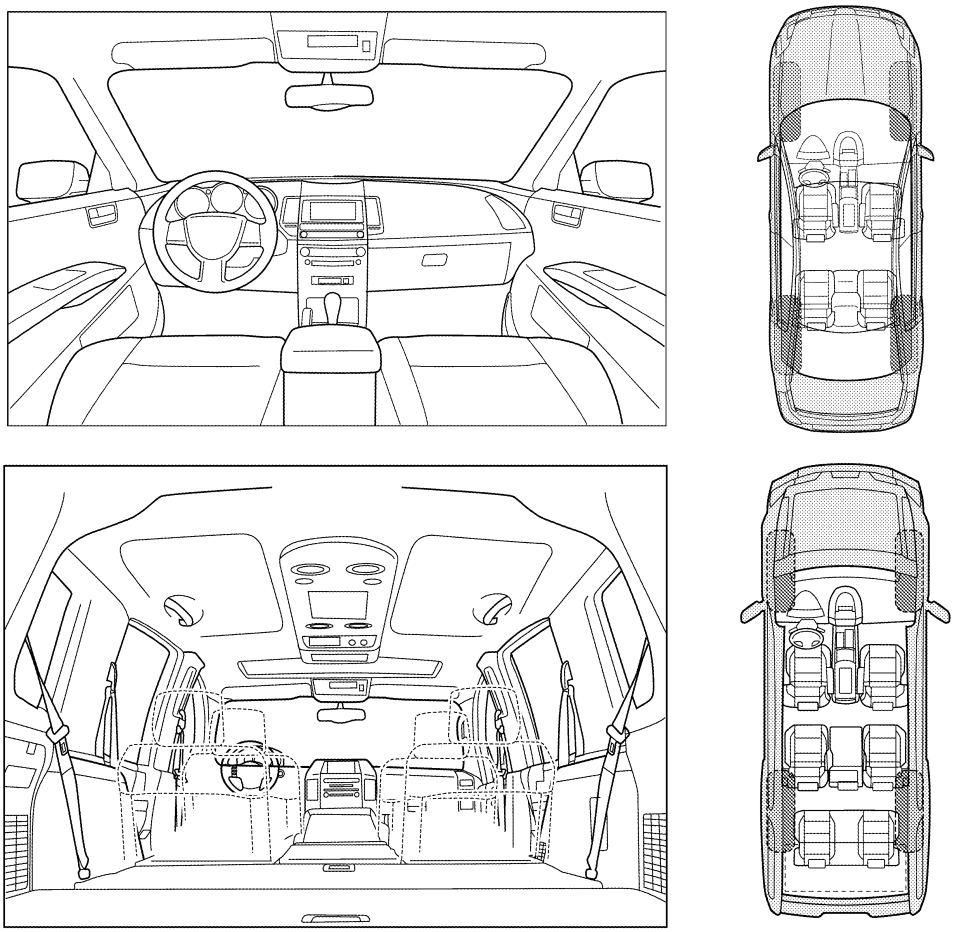

Continue to page 2 of the worksheet and briefly describe the location of the noise or rattle. In addition, please indicate the conditions which are present when the noise occurs.

-1-

LAIA0072E

SQUEAK & RATTLE DIAGNOSTIC WORKSHEET - page 2

Briefly describe the location where the noise occurs:

_____

_____

II. WHEN DOES IT OCCUR? (please check the boxes that apply)

- ☐ Anytime
- ☐ 1st time in the morning
- ☐ Only when it is cold outside
- ☐ Only when it is hot outside
- ☐ After sitting out in the rain
- ☐ When it is raining or wet
- ☐ Dry or dusty conditions
- ☐ Other:

III. WHEN DRIVING:

- ☐ Through driveways
- ☐ Over rough roads
- ☐ Over speed bumps
- ☐ Only about ____ mph
- ☐ On acceleration
- ☐ Coming to a stop
- ☐ On turns: left, right or either (circle)
- ☐ With passengers or cargo
- ☐ Other: _____
- ☐ After driving _____ miles or _____ minutes

IV. WHAT TYPE OF NOISE

- ☐ Squeak (like tennis shoes on a clean floor)
- ☐ Creak (like walking on an old wooden floor)
- ☐ Rattle (like shaking a baby rattle)
- ☐ Knock (like a knock at the door)
- ☐ Tick (like a clock second hand)
- ☐ Thump (heavy muffled knock noise)
- ☐ Buzz (like a bumble bee)

TO BE COMPLETED BY DEALERSHIP PERSONNEL

Test Drive Notes:

_____

_____

_____

	YES	NO	Initials of person performing
Vehicle test driven with customer	☐	☐	_____
- Noise verified on test drive	☐	☐	_____
- Noise source located and repaired	☐	☐	_____
- Follow up test drive performed to confirm repair	☐	☐	_____

VIN: _____ Customer Name _____

W.O.# _____ Date: _____

This form must be attached to Work Order

LAIA0071E

REMOVAL AND INSTALLATION

INSIDE MIRROR

Exploded View

INFOID:0000000007986730

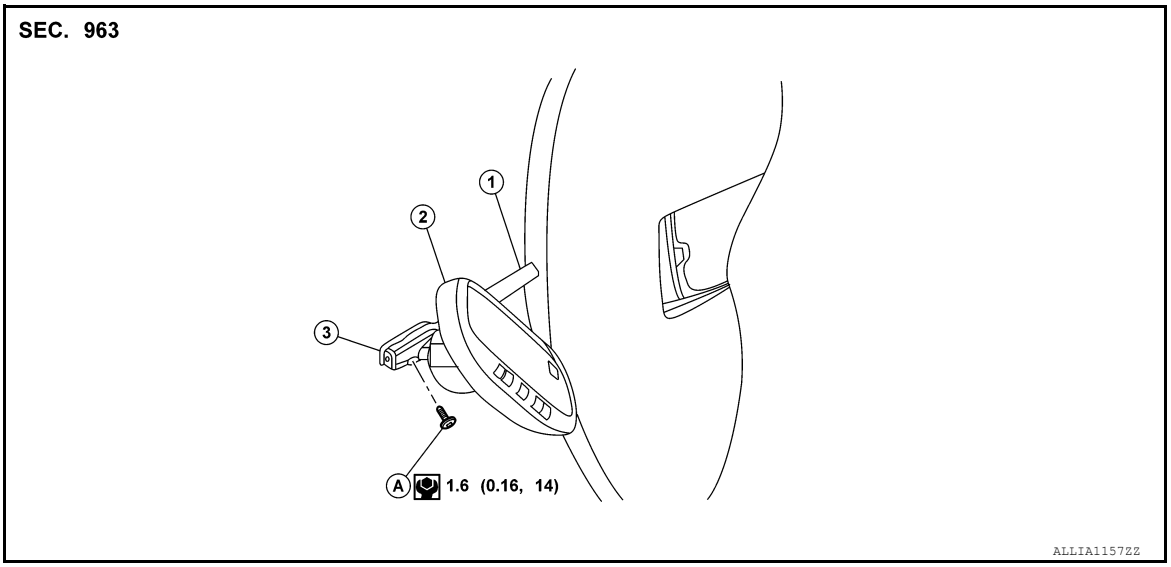

1. Inside mirror finisher
2. Inside mirror
3. Mirror base

A. Screw

Removal and Installation

INFOID:0000000007986731

REMOVAL

1. Remove the inside mirror base screw.
2. Disconnect the harness connector from the inside mirror.
3. Slide the inside mirror upward and remove.

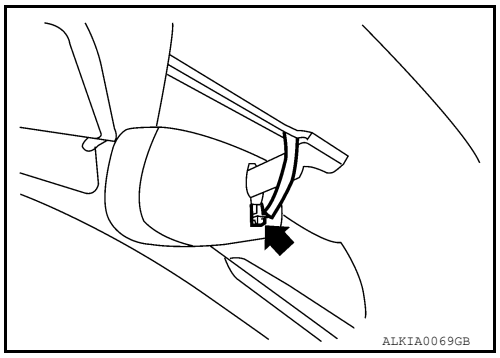

INSTALLATION

Installation is in the reverse order of removal.

CAUTION:

Apply Genuine Mirror Adhesive or equivalent to bonding surface of mounting bracket. Refer to GI-21, "Recommended Chemical Products and Sealants".

DOOR MIRROR

Exploded View

INFOID:0000000007986732

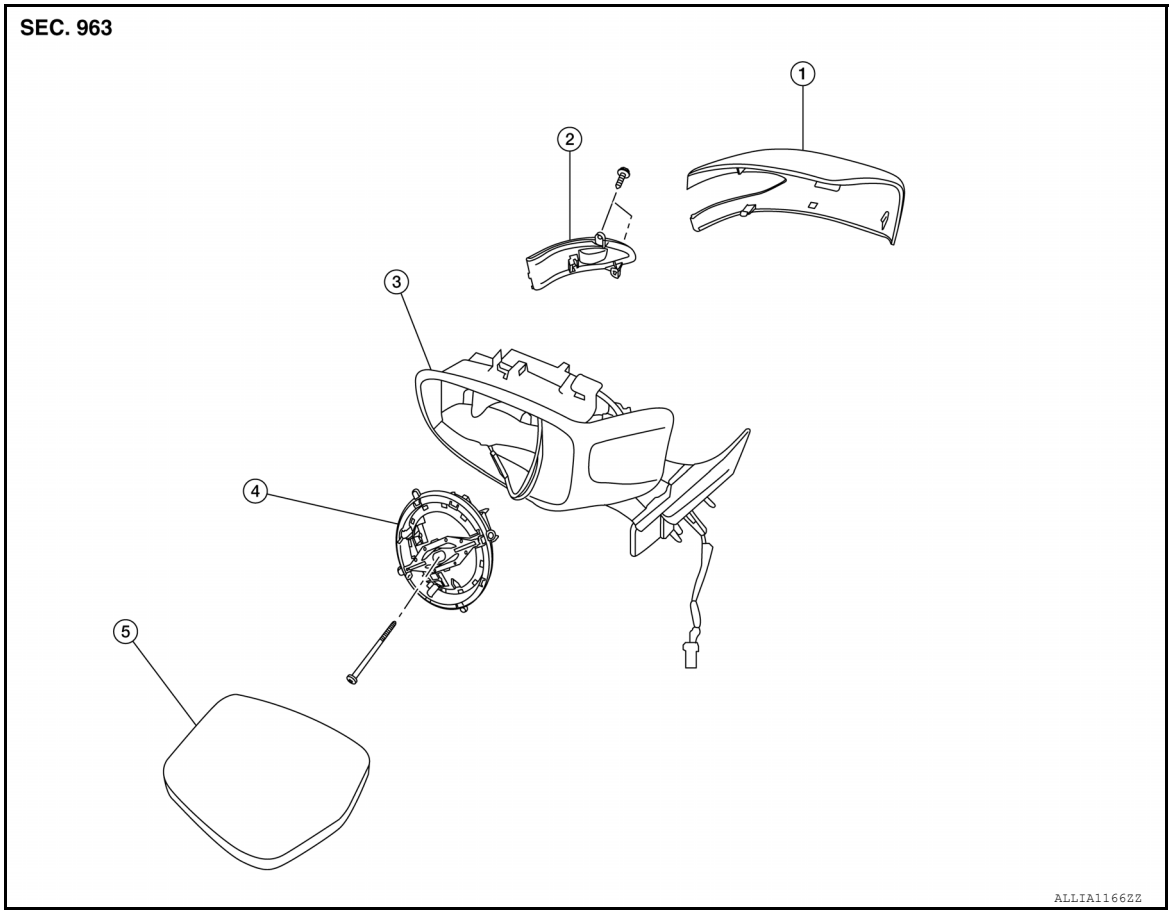

1.	Door mirror cover	2.	Side turn signal lamp	3.	Door mirror housing assembly
4.	Door mirror actuator	5.	Door mirror glass and holder		

Removal and Installation

INFOID:0000000007986733

REMOVAL

1. Remove the front door finisher. Refer to INT-15, "Removal and Installation".
2. Disconnect the harness connectors (A) from the door mirror corner finisher.
3. Release the clips and pawls using a suitable tool and remove the door mirror corner finisher (1).
   △: Clip
   ◌: Pawl

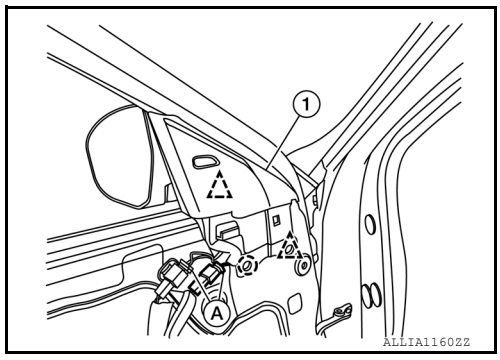

4. Remove the door mirror nuts (A) and the door mirror assembly (1).

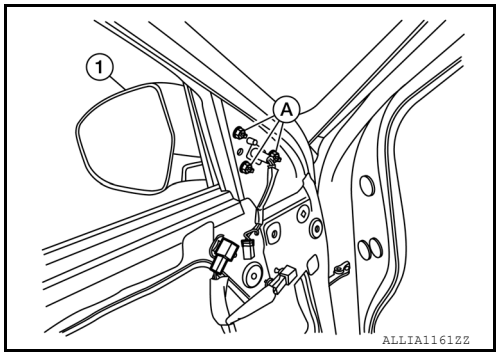

INSTALLATION

Installation is in the reverse order of removal.

DOOR MIRROR GLASS

Removal and Installation

INFOID:0000000008743443

REMOVAL

1. Position the door mirror glass surface upward.
2. Apply protective tape (A) to mirror housing.
3. Insert a suitable tool (B) as shown and gently release the door mirror glass (1) from the door mirror actuator.
   CAUTION:
   Do not use excessive force or damage or breakage of the door mirror glass could occur.

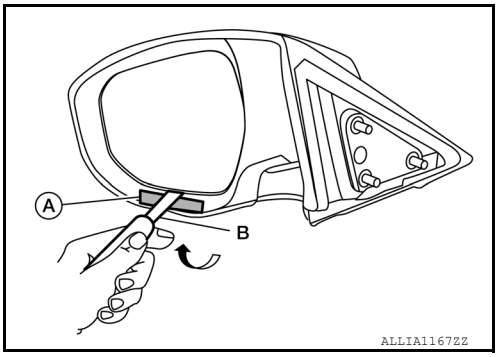

INSTALLATION

Installation is in the reverse order of removal.

DOOR MIRROR REAR FINISHER

Removal and Installation

INFOID:0000000008743444

REMOVAL

1. Remove the door mirror glass. Refer to MIR-22, "Removal and Installation".
2. Release the door mirror rear finisher pawls (A) using a suitable tool.

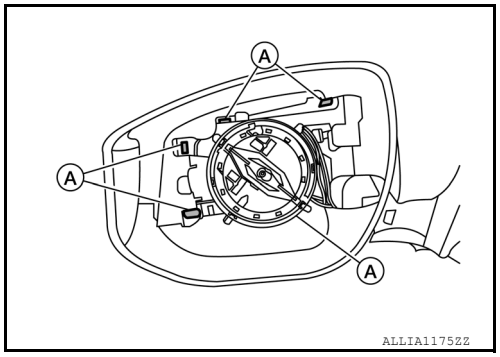

3. Remove the door mirror rear finisher.

INSTALLATION

Installation is in the reverse order of removal.

CAUTION:

After installation, check that pawls are securely engaged.

DOOR MIRROR ACTUATOR

Removal and Installation

INFOID:0000000008743445

REMOVAL

1. Remove the door mirror glass. Refer to MIR-22, "Removal and Installation".
2. Remove the mirror actuator screw (A).
3. Release the door mirror actuator pawls (A) using a suitable tool.
   ◌: Pawl
4. Disconnect the harness connector from the door mirror actuator (1) and remove.

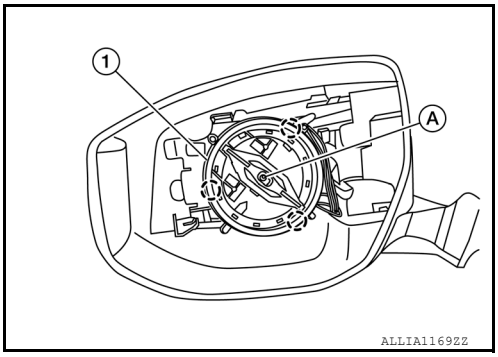

INSTALLATION

Installation is in the reverse order of removal.

DOOR MIRROR REMOTE CONTROL SWITCH

Removal and Installation

INFOID:0000000008743446

REMOVAL

1. Release the pawls and remove the front door pull handle outer finisher. Refer to INT-15, "Exploded View".
2. Disconnect the harness connector from the door mirror remote control switch.
3. Release the pawls and remove the door mirror remote control switch from the front door finisher.

INSTALLATION

Installation is in the reverse order of removal.