SECTION VTL
VENTILATION SYSTEM

CONTENTS

PRECAUTION 2

PRECAUTIONS 2
Precaution for Supplemental Restraint System (SRS) "AIR BAG" and "SEAT BELT PRE-TENSIONER" 2
Precaution for Working with HFC-134a (R-134a) 2
Precaution for Work 3

PREPARATION 4

PREPARATION 4
Special Service Tool 4
Commercial Service Tool 4

SYSTEM DESCRIPTION 5

IN-CABIN MICROFILTER 5
Description 5

PERIODIC MAINTENANCE 6

IN-CABIN MICROFILTER 6
Removal and Installation 6

REMOVAL AND INSTALLATION 7

CONTROL UNIT 7
Removal and Installation 7

INTAKE SENSOR 8
Removal and Installation 8

BLOWER MOTOR 9
Component 9
Removal and Installation 9

VARIABLE BLOWER CONTROL 10
Removal and Installation 10

FRONT BLOWER MOTOR RESISTOR 11
Removal and Installation 11

HEATER & COOLING UNIT ASSEMBLY 12
Component 12
Removal and Installation 12

EVAPORATOR 14
Removal and Installation 14

EXPANSION VALVE 16
Removal and Installation 16

HEATER CORE 17
Component 17
Removal and Installation 17

INTAKE DOOR MOTOR 18
Removal and Installation 18

MODE DOOR MOTOR 19
Removal and Installation 19

AIR MIX DOOR MOTOR 20
Component 20
Removal and Installation 20

DUCTS AND GRILLES 21
Component 21
Removal and Installation 22

PRECAUTION

PRECAUTIONS

Precaution for Supplemental Restraint System (SRS) "AIR BAG" and "SEAT BELT PRE-TENSIONER"

INFOID:0000000007327159

The Supplemental Restraint System such as “AIR BAG” and “SEAT BELT PRE-TENSIONER”, used along with a front seat belt, helps to reduce the risk or severity of injury to the driver and front passenger for certain types of collision. This system includes seat belt switch inputs and dual stage front air bag modules. The SRS system uses the seat belt switches to determine the front air bag deployment, and may only deploy one front air bag, depending on the severity of a collision and whether the front occupants are belted or unbelted.
Information necessary to service the system safely is included in the SR and SB section of this Service Manual.

WARNING:

- **To avoid rendering the SRS inoperative, which could increase the risk of personal injury or death in the event of a collision which would result in air bag inflation, all maintenance must be performed by an authorized NISSAN/INFINITI dealer.**
- **Improper maintenance, including incorrect removal and installation of the SRS, can lead to personal injury caused by unintentional activation of the system. For removal of Spiral Cable and Air Bag Module, see the SR section.**
- **Do not use electrical test equipment on any circuit related to the SRS unless instructed to in this Service Manual. SRS wiring harnesses can be identified by yellow and/or orange harnesses or harness connectors.**

PRECAUTIONS WHEN USING POWER TOOLS (AIR OR ELECTRIC) AND HAMMERS

WARNING:

- **When working near the Airbag Diagnosis Sensor Unit or other Airbag System sensors with the Ignition ON or engine running, DO NOT use air or electric power tools or strike near the sensor(s) with a hammer. Heavy vibration could activate the sensor(s) and deploy the air bag(s), possibly causing serious injury.**
- **When using air or electric power tools or hammers, always switch the Ignition OFF, disconnect the battery, and wait at least 3 minutes before performing any service.**

Precaution for Working with HFC-134a (R-134a)

INFOID:0000000007327160

WARNING:

- **CFC-12 (R-12) refrigerant and HFC-134a (R-134a) refrigerant are not compatible. If the refrigerants are mixed compressor failure is likely to occur. Refer to HA-4, "Contaminated Refrigerant". To determine the purity of HFC-134a (R-134a) in the vehicle and recovery tank, use Refrigerant Recovery/Recycling Recharging equipment and Refrigerant Identifier.**
- **Use only specified oil for the HFC-134a (R-134a) A/C system and HFC-134a (R-134a) components. If oil other than that specified is used, compressor failure is likely to occur.**
- **The specified HFC-134a (R-134a) oil rapidly absorbs moisture from the atmosphere. The following handling precautions must be observed:**

- **When removing refrigerant components from a vehicle, immediately cap (seal) the component to minimize the entry of moisture from the atmosphere.**
- **When installing refrigerant components to a vehicle, do not remove the caps (unseal) until just before connecting the components. Connect all refrigerant loop components as quickly as possible to minimize the entry of moisture into system.**
- **Only use the specified oil from a sealed container. Immediately reseal containers of oil. Without proper sealing, oil will become moisture saturated and should not be used.**
- **Avoid breathing A/C refrigerant and oil vapor or mist. Exposure may irritate eyes, nose and throat. Remove HFC-134a (R-134a) from the A/C system using certified service equipment meeting requirements of SAE J2210 [HFC-134a (R-134a) recycling equipment], or SAE J2209 [HFC-134a (R-134a) recovery equipment]. If accidental system discharge occurs, ventilate work area before resuming service. Additional health and safety information may be obtained from refrigerant and oil manufacturers.**
- **Do not allow oil, Genuine NISSAN A/C System Oil Type R to come in contact with styrofoam parts. Damage may result.**

Precaution for Work

INFOID:0000000007327162

- When removing or disassembling each component, be careful not to damage or deform it. If a component may be subject to interference, be sure to protect it with a shop cloth.
- When removing (disengaging) components with a screwdriver or similar tool, be sure to wrap the component with a shop cloth or vinyl tape to protect it.
- Protect the removed parts with a shop cloth and prevent them from being dropped.
- Replace a deformed or damaged clip.
- If a part is specified as a non-reusable part, always replace it with a new one.
- Be sure to tighten bolts and nuts securely to the specified torque.
- After installation is complete, be sure to check that each part works properly.
- Follow the steps below to clean components:
- Water soluble dirt:
- Dip a soft cloth into lukewarm water, wring the water out of the cloth and wipe the dirty area.
- Then rub with a soft, dry cloth.
- Oily dirt:
- Dip a soft cloth into lukewarm water with mild detergent (concentration: within 2 to 3%) and wipe the dirty area.
- Then dip a cloth into fresh water, wring the water out of the cloth and wipe the detergent off.
- Then rub with a soft, dry cloth.
- Do not use organic solvent such as thinner, benzene, alcohol or gasoline.
- For genuine leather seats, use a genuine leather seat cleaner.

PREPARATION

PREPARATION

Special Service Tool

INFOID:0000000007327163

The actual shapes of Kent-Moore tools may differ from those of special service tools illustrated here.

Tool number (Kent-Moore No.) Tool name	Description
— (J-46534) Trim Tool Set 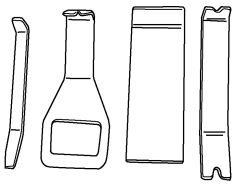 AWJIA0483ZZ	Removing trim components

Commercial Service Tool

INFOID:0000000007327164

Tool name	Description
Power tool 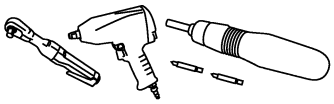 PIIB1407E	Loosening nuts, screws and bolts

SYSTEM DESCRIPTION

IN-CABIN MICROFILTER

Description

INFOID:0000000007327165

FUNCTION

The air inside the passenger compartment is filtered by the in-cabin microfilters when the heater or A/C controls are set on either the recirculation or fresh mode. The two in-cabin microfilters are located in the heater and cooling unit assembly.

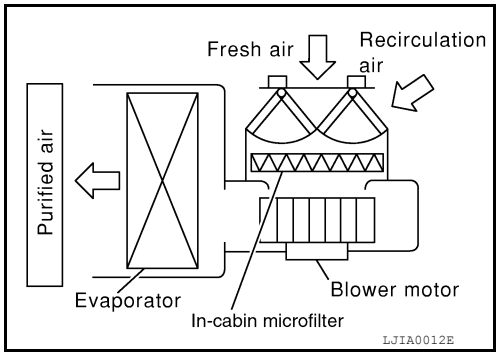

REPLACEMENT TIMING

Replacement of the two in-cabin microfilters is recommended on a regular interval depending on the driving conditions. Refer to MA-11, "FOR USA AND CANADA : Periodic Maintenance" (For United States and Canada) or MA-15, "FOR MEXICO : Periodic Maintenance" (For Mexico). It may also be necessary to replace the two in-cabin microfilters as part of a component replacement if the in-cabin microfilters are damaged.

PERIODIC MAINTENANCE

IN-CABIN MICROFILTER

Removal and Installation

INFOID:0000000007327166

REPLACEMENT PROCEDURE

1. Open the lower glove box and press in on the sides so that it will open completely allowing it to hang by the cord.

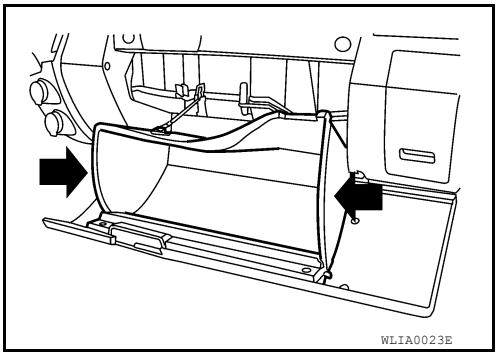

2. Gently lift up on the tab (1) then pull the in-cabin microfilter cover down (2) to remove the cover (3).
   CAUTION:
   Use care when lifting up on the tab to avoid damaging it.

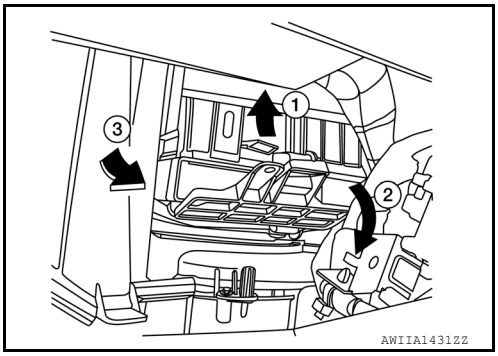

3. Remove the in-cabin microfilters from the heater and cooling unit housing.
4. Insert the first new in-cabin microfilter into the heater and cooling unit housing and slide it over to the right. Insert the second new in-cabin microfilter into the heater and cooling unit housing as shown.
   NOTE:
   The in-cabin microfilters are marked with air flow arrows. The end of the microfilter with the arrow should face the rear of the vehicle. The arrows should point downward.

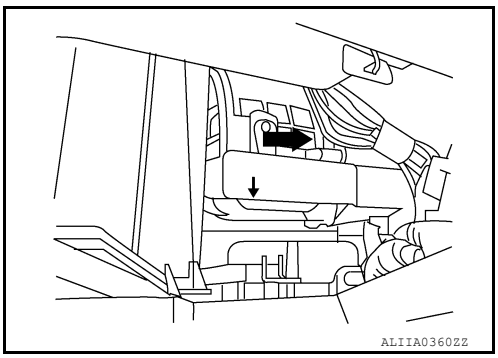

5. Install the in-cabin microfilter cover, make sure the tab is locked in place as shown.

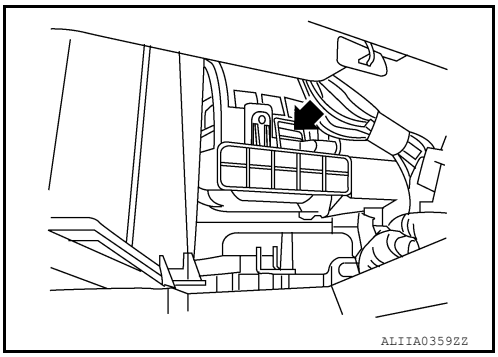

6. Close the lower glove box completely.

REMOVAL AND INSTALLATION

CONTROL UNIT

Removal and Installation

INFOID:0000000007327167

FRONT AIR CONTROL

Removal

1. Remove the A/T finisher. Refer to IP-25, "Removal and Installation"
2. Remove the cup holder.
3. Remove cluster lid C. Refer to IP-14, "Exploded View".
4. Remove the front air control from cluster lid C.
   - For type 1, remove the four screws (A) securing the front air control (1) to cluster lid C.

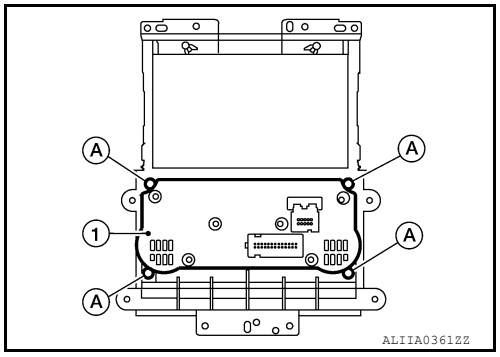

   - For type 2, remove the four screws securing the front air control to cluster lid C.

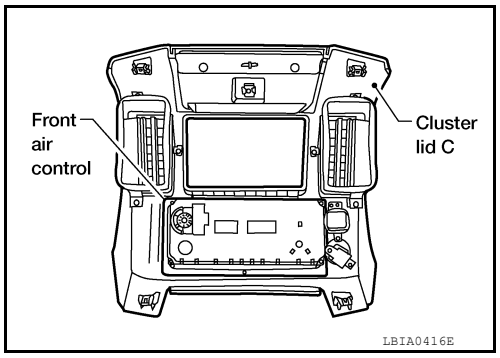

Installation

Installation is in the reverse order of removal.

INTAKE SENSOR

Removal and Installation

INFOID:0000000007327168

REMOVAL

1. Remove the lower dash side finisher. Refer to IP-14, "Exploded View".
2. Remove the assist grip handle. Refer to INT-18, "Component".
3. Remove the front pillar upper finisher. Refer to INT-19, "Removal and Installation".
4. Remove the upper glove box (cluster lid E). Refer to IP-14, "Exploded View".
5. Disconnect the intake sensor electrical connector.
   NOTE:
   The intake sensor is located on the top of the heater and cooling unit assembly next to the A/C evaporator cover.
6. Twist the intake sensor to remove the intake sensor from the heater and cooling unit assembly.

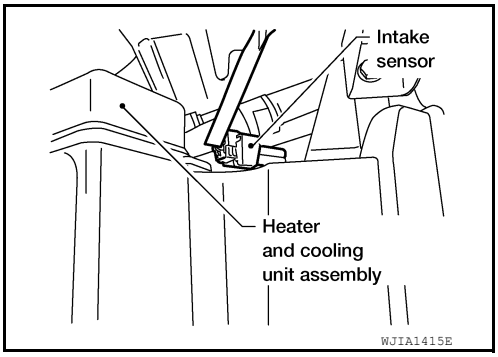

INSTALLATION

Installation is in the reverse order of removal.

BLOWER MOTOR

Component

INFOID:0000000007327169

Blower Motor

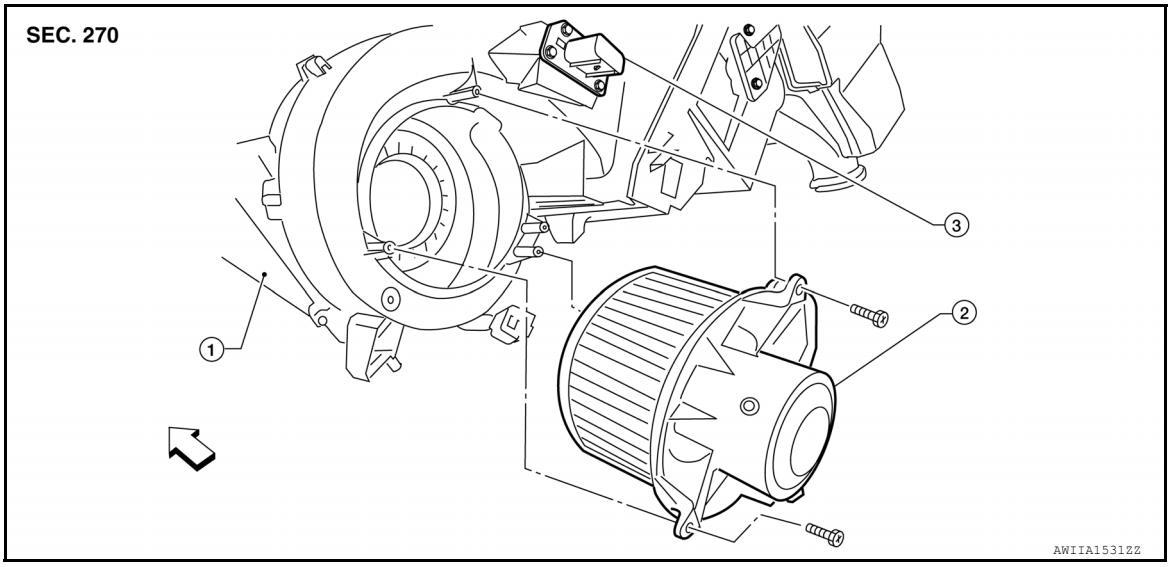

1. Heater and cooling unit assembly
2. Blower motor
3. Variable blower control / Blower motor resistor

⇦ Vehicle front

Removal and Installation

INFOID:0000000007327170

REMOVAL

1. Remove the lower glove box assembly. Refer to IP-24, "Removal and Installation".
2. Disconnect the blower motor electrical connector.
3. Remove the three screws and the blower motor.
4. Remove the blower motor wheel.

INSTALLATION

Installation is in the reverse order of removal.

VARIABLE BLOWER CONTROL

Removal and Installation

INFOID:0000000007327171

Variable Blower Control

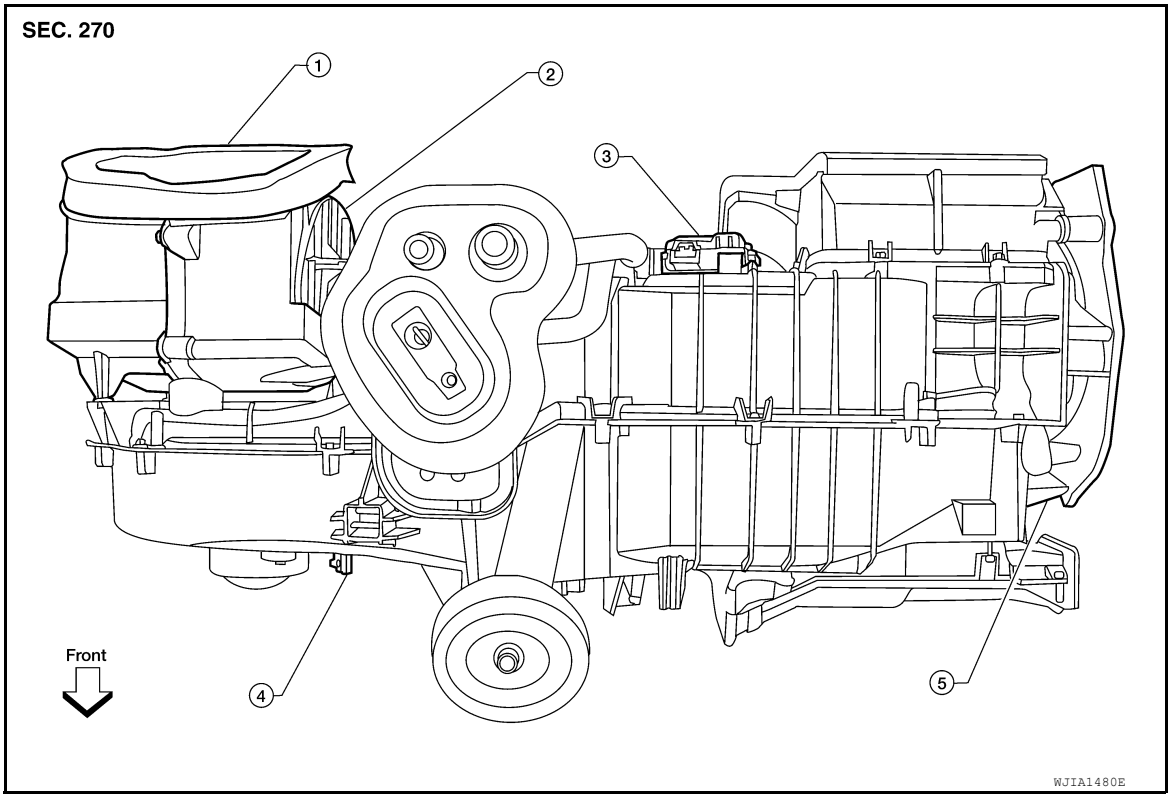

1. Heater and cooling unit assembly
2. Intake door motor
3. Air mix door motor
4. Variable blower control
5. Mode door motor

REMOVAL

1. Disconnect the variable blower control electrical connector.
2. Remove the two screws and remove the variable blower control.

INSTALLATION

Installation is in the reverse order of removal.

FRONT BLOWER MOTOR RESISTOR

Removal and Installation

INFOID:0000000007327172

Blower Motor Resistor

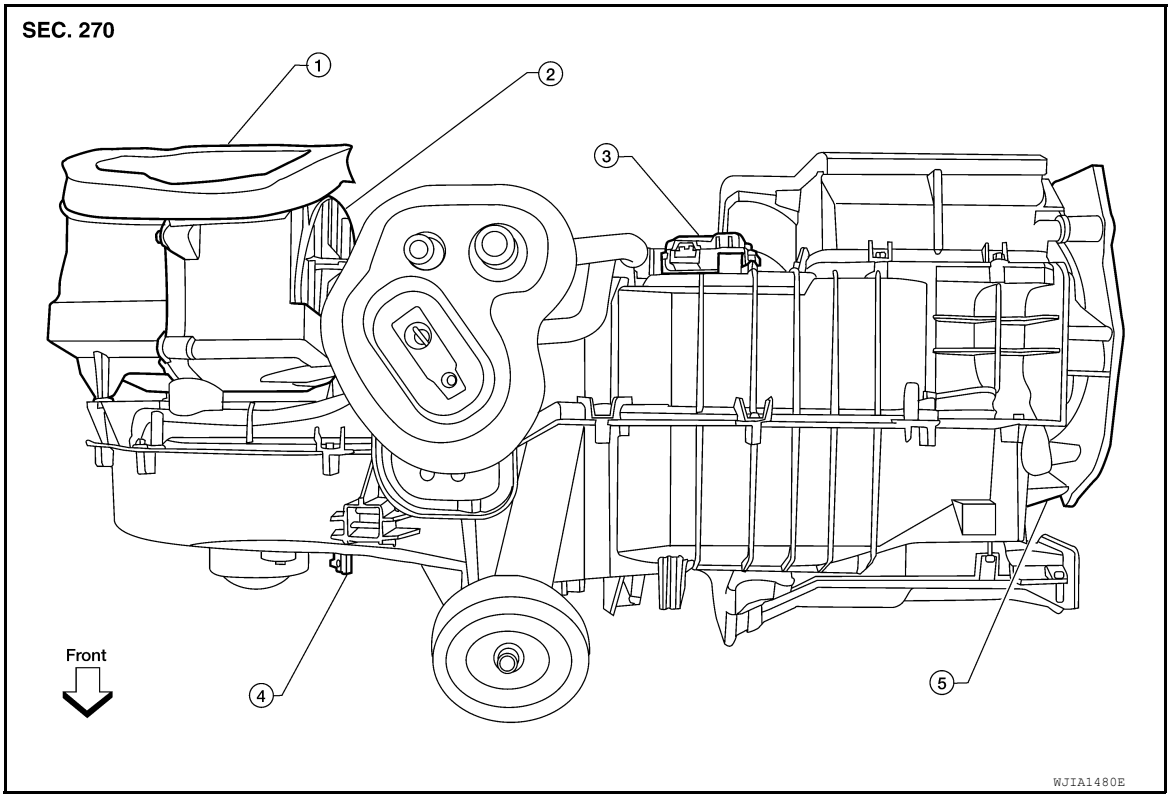

1. Heater and cooling unit assembly
2. Intake door motor
3. Air mix door motor
4. Blower motor resistor
5. Mode door motor

REMOVAL

1. Disconnect the blower motor resistor electrical connector.
2. Remove the two screws and remove the blower motor resistor.

INSTALLATION

Installation is in the reverse order of removal.

HEATER & COOLING UNIT ASSEMBLY

Component

INFOID:0000000007327173

Heater and Cooling Unit Assembly

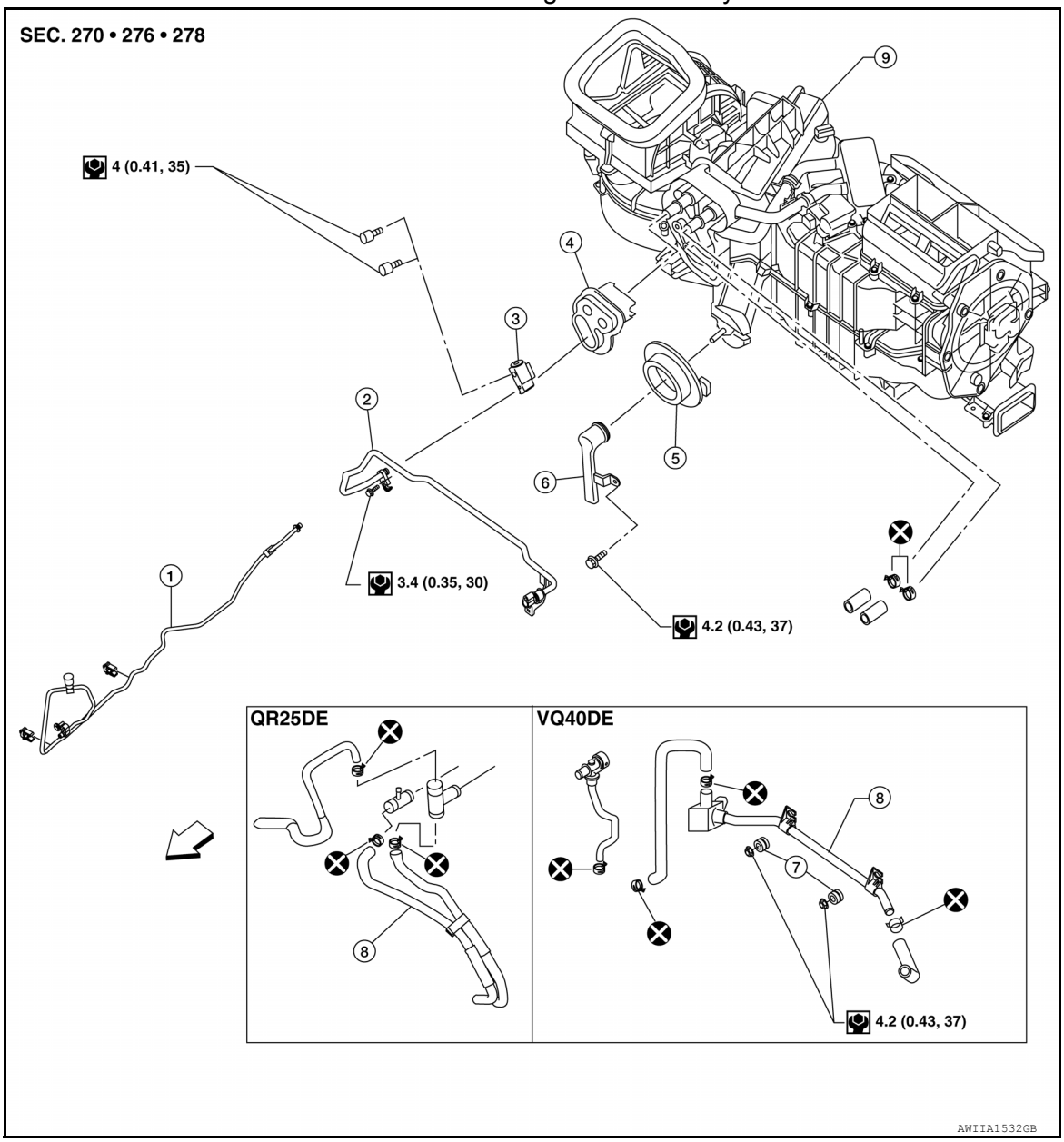

1. High-pressure A/C pipe
2. Low-pressure A/C pipe
3. Expansion valve
4. Heater core and evaporator pipes grommet
5. A/C drain hose grommet
6. A/C drain hose
7. Heater core pipe mounts
8. Heater core pipes
9. Heater and cooling unit assembly

⇦ Vehicle front

NOTE:
When removing components such as hoses, tubes/lines, etc., cap or plug openings to prevent fluid from spilling.

Removal and Installation

INFOID:0000000007327174

REMOVAL

CAUTION:

Before servicing, turn the ignition switch off, disconnect both battery terminals and wait at least 3 minutes.

1. Move the two front seats to the rear most position on the seat track.
2. Discharge the refrigerant from the A/C system. Refer to HA-26, "HFC-134a (R-134a) Service Procedure".
3. Drain the coolant from the engine cooling system. Refer to CO-12, "Changing Engine Coolant" (QR25DE), CO-40, "Changing Engine Coolant" (VQ40DE).
4. Disconnect the battery negative and positive terminals.
5. For vehicles equipped with the VQ40DE engine, remove the RH heater core pipes nut.
6. Disconnect the heater core hoses from the heater core.
7. Disconnect the high and low pressure A/C pipes from the expansion valve.
8. Remove the instrument panel and center console. Refer to IP-14, "Exploded View".
9. Remove the two front floor ducts.
10. Remove the steering column. Refer to ST-12, "Removal and Installation".

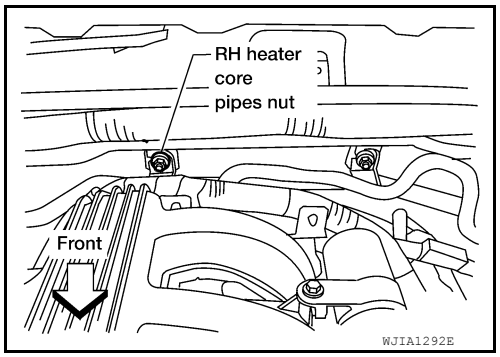

11. Disconnect the instrument panel wire harness at the LH and RH in-line connector brackets, and the fuse block (SMJ) harness connectors. Refer to PG-38, "Harness Layout".
12. Remove the covers and steering member bolts from each side to disconnect the steering member from the vehicle body. Refer to IP-14, "Exploded View".
13. Remove the heater and cooling unit assembly with it attached to the steering member from the vehicle.
    CAUTION:
    Use care not to damage the seats and interior trim panels when removing the heater and cooling unit assembly with it attached to the steering member.
14. Remove the heater and cooling unit assembly from the steering member.

INSTALLATION

Installation is in the reverse order of removal.

CAUTION:

- **Do not reuse O-rings.**
- **Apply A/C oil to the O-ring of the low-pressure A/C pipe and high-pressure A/C pipe for installation.**
- **After charging the refrigerant, check for leaks. Refer to HA-20, "Checking of Refrigerant Leaks".**

NOTE:

- Fill the engine cooling system with the specified coolant mixture. Refer to CO-12, "Changing Engine Coolant" (QR25DE), CO-40, "Changing Engine Coolant" (VQ40DE).
- Recharge the A/C system. Refer to HA-26, "HFC-134a (R-134a) Service Procedure".

EVAPORATOR

Removal and Installation

INFOID:0000000007327175

Heater and Cooling Unit Assembly

SEC. 270

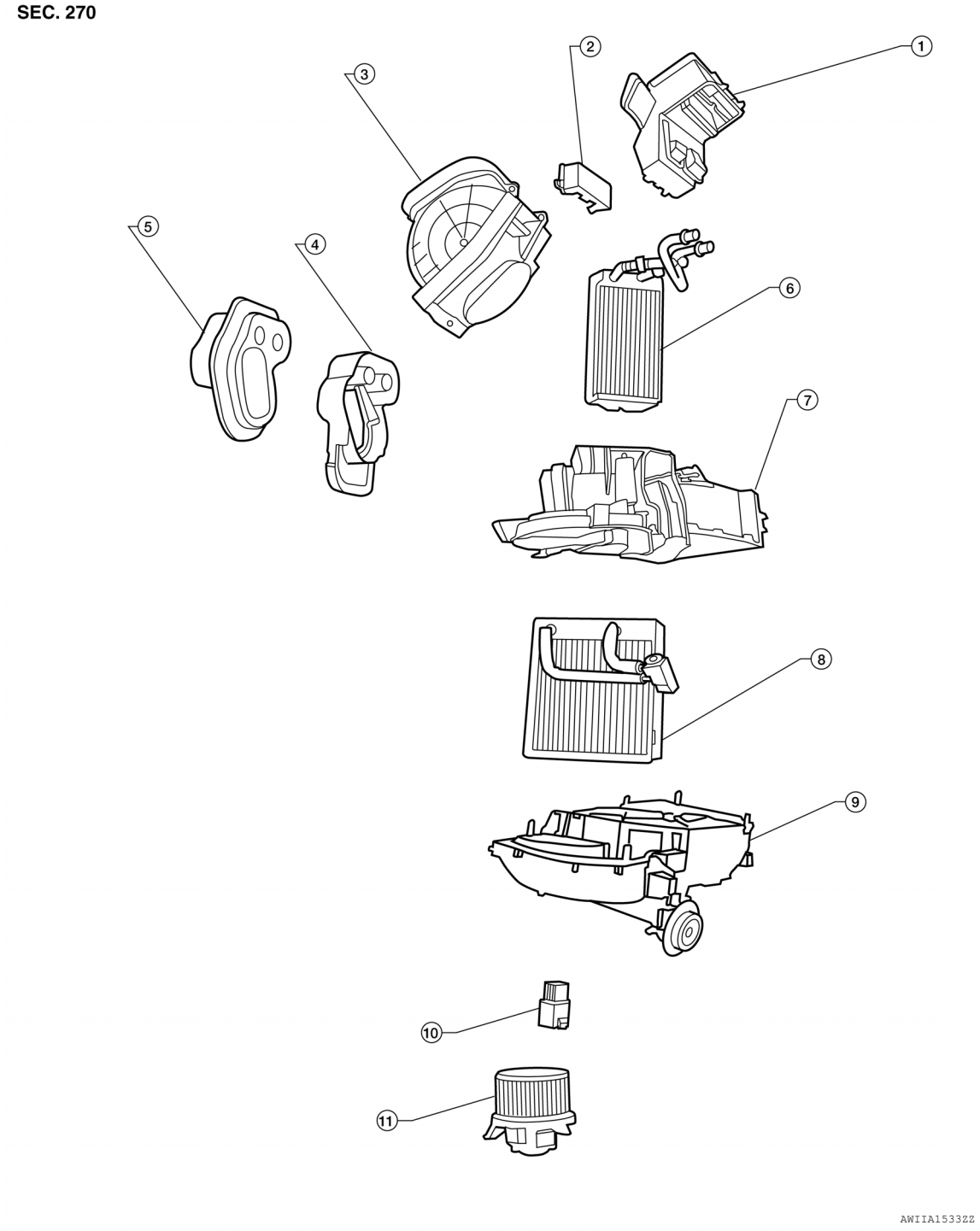

1.	Center ventilator connector duct	2.	Heater core cover	3.	Intake air case
4.	Heater core and evaporator pipes bracket	5.	Heater core and evaporator pipes grommet	6.	Heater core
7.	Upper heater and cooling unit case	8.	Evaporator and expansion valve assembly	9.	Lower heater and cooling unit case
10.	Variable blower control / Blower motor resistor	11.	Blower motor		

REMOVAL

1. Remove the heater core. Refer to VTL-17, "Component".
2. Separate the heater and cooling unit case.
3. Remove the evaporator and expansion valve assembly.

INSTALLATION

Installation is in the reverse order of removal.

CAUTION:

- **Do not reuse O-rings.**
- **Apply A/C to the O-rings on the A/C low-pressure flexible A/C hose and the high-pressure A/C pipe for installation.**

EXPANSION VALVE

Removal and Installation

INFOID:0000000009002615

For removal and installation of the expansion valve, refer to HA-39, "Removal and Installation".

HEATER CORE

Component

INFOID:0000000007327176

Heater and Cooling Unit Assembly

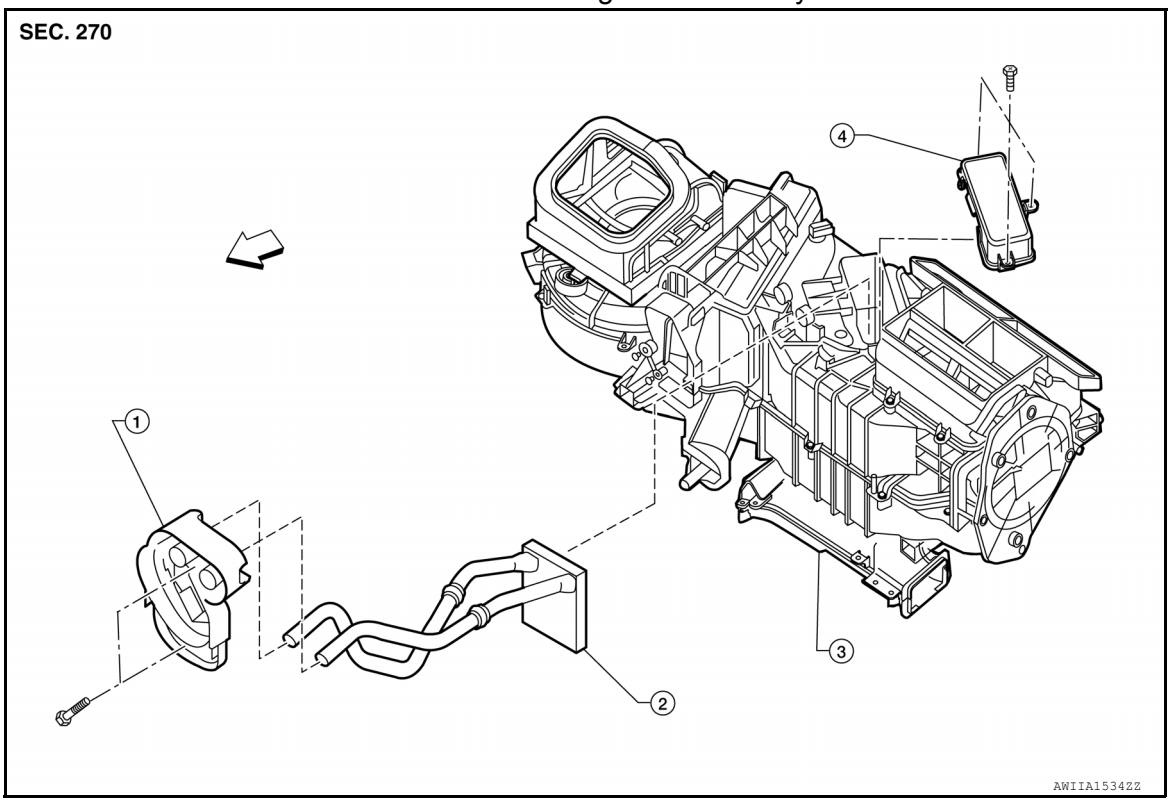

1. Heater core and evaporator pipe bracket
2. Heater core
3. Heater and cooling unit assembly
4. Heater core cover

⇦ Vehicle front

Removal and Installation

INFOID:0000000007327177

REMOVAL

1. Remove the heater and cooling unit assembly. Refer to VTL-12, "Removal and Installation".
2. Remove the three screws and the heater core cover.
3. Remove the heater core and evaporator pipe bracket.
4. Remove the heater core.
   NOTE:
   If the in-cabin microfilters are contaminated from coolant leaking from the heater core, replace the in-cabin microfilters with new ones before installing the new heater core.

INSTALLATION

Installation is in the reverse order of removal.

INTAKE DOOR MOTOR

Removal and Installation

INFOID:0000000007327178

Intake Door Motor

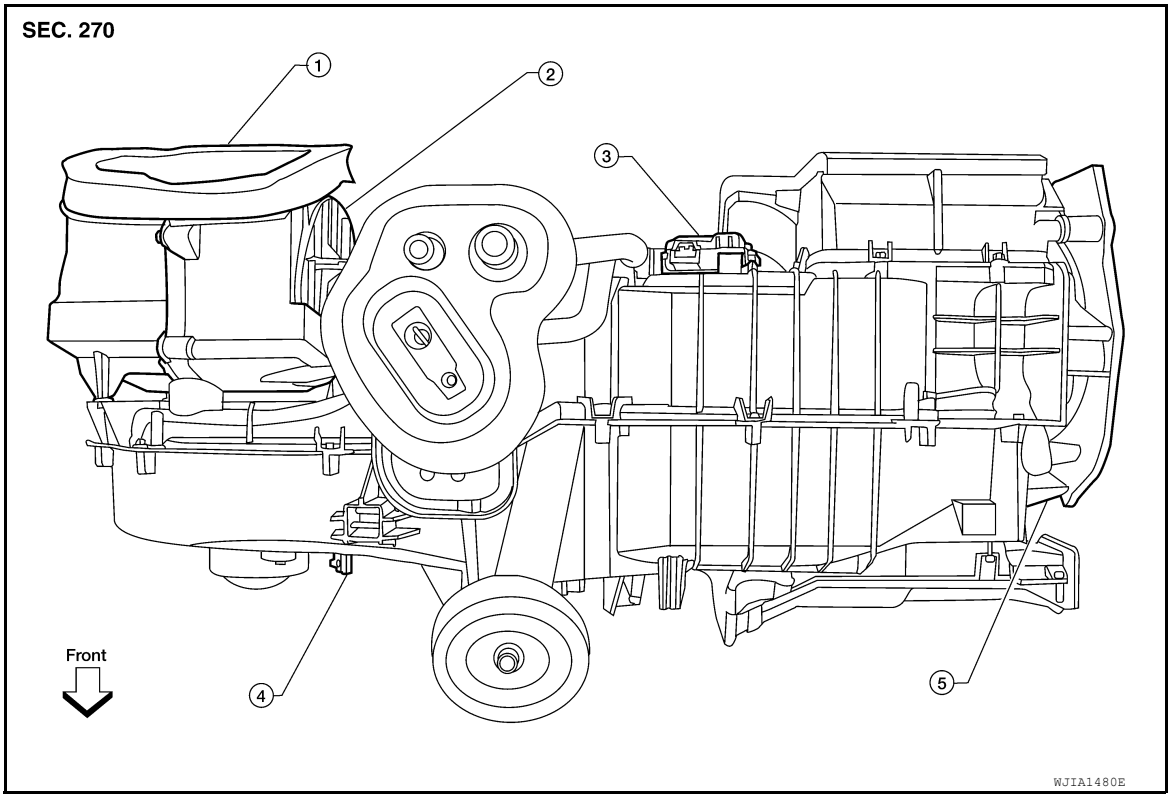

1.	Heater and cooling unit assembly	2.	Intake door motor	3.	Air mix door motor
4.	Variable blower control / Blower motor resistor	5.	Mode door motor		

REMOVAL

1. Remove the heater and cooling unit assembly. Refer to VTL-12, "Removal and Installation".
2. Disconnect the intake door motor electrical connector.
3. Remove the three screws and the intake door motor.

INSTALLATION

Installation is in the reverse order of removal.

MODE DOOR MOTOR

Removal and Installation

INFOID:0000000007327179

Mode Door Motor

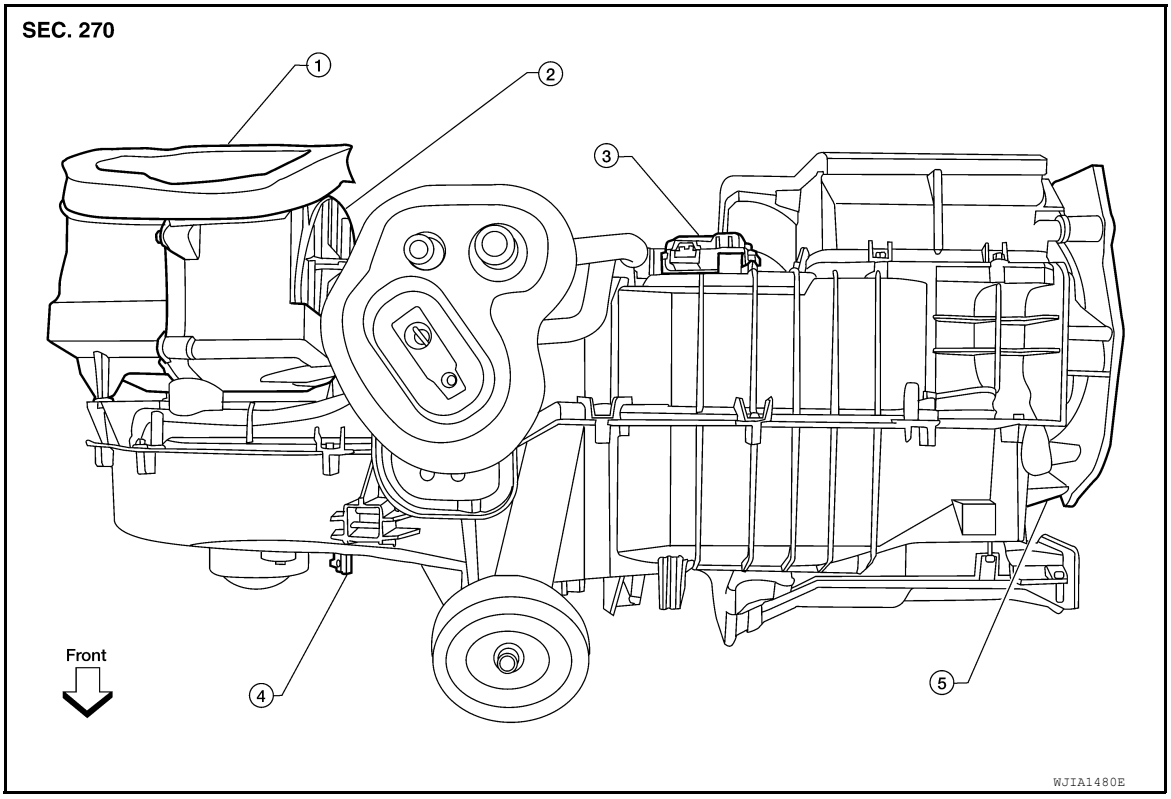

1. Heater and cooling unit assembly
2. Intake door motor
3. Air mix door motor
4. Variable blower control/Blower motor resistor
5. Mode door motor

REMOVAL

1. Remove the BCM. Refer to BCS-49, "Removal and Installation".
2. Disconnect the mode door motor electrical connector.
3. Remove the three screws and remove the mode door motor.

INSTALLATION

Installation is in the reverse order of removal.

AIR MIX DOOR MOTOR

Component

INFOID:0000000007327180

Air Mix Door Motor

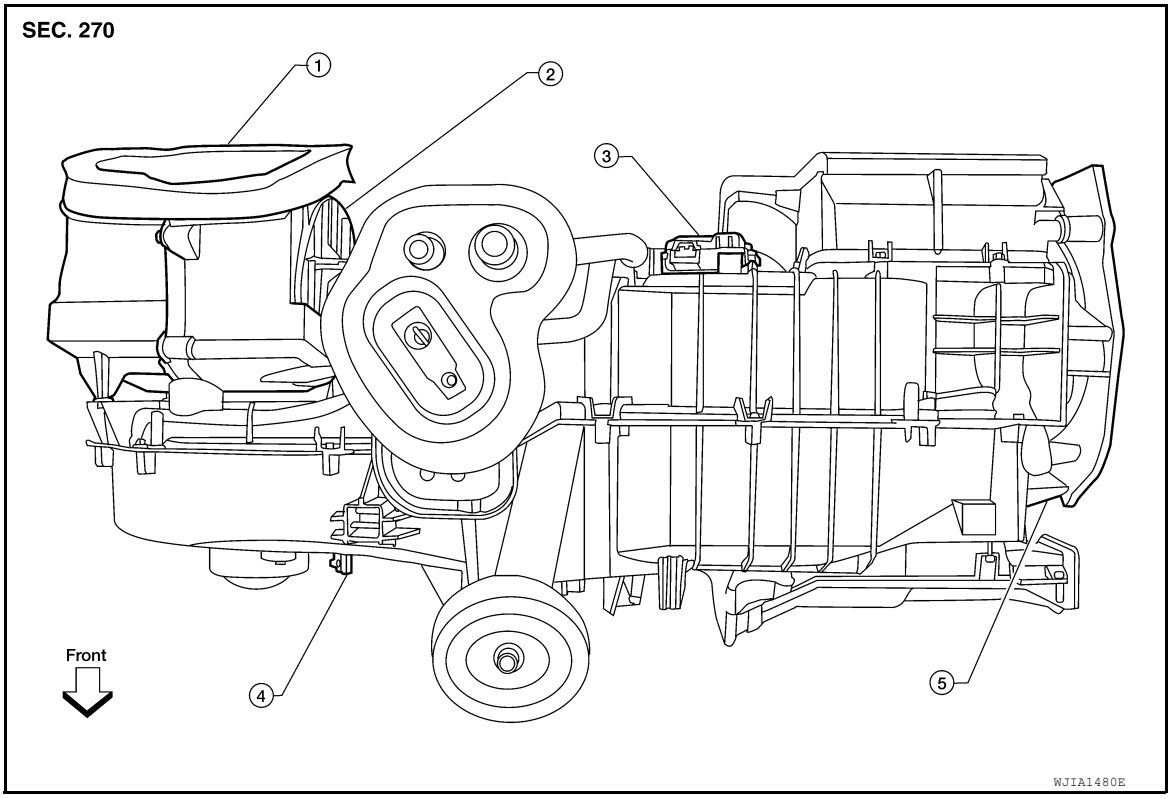

1. Heater and cooling unit assembly
2. Intake door motor
3. Air mix door motor
4. Variable blower control / Blower motor resistor
5. Mode door motor

Removal and Installation

INFOID:0000000007327181

REMOVAL

1. Remove the heater and cooling unit assembly. Refer to VTL-12, "Removal and Installation".
2. Disconnect the air mix door motor electrical connector.
3. Remove the three screws and the air mix door motor.

INSTALLATION

Installation is in the reverse order of removal.

DUCTS AND GRILLES

Component

INFOID:0000000007327182

Ducts

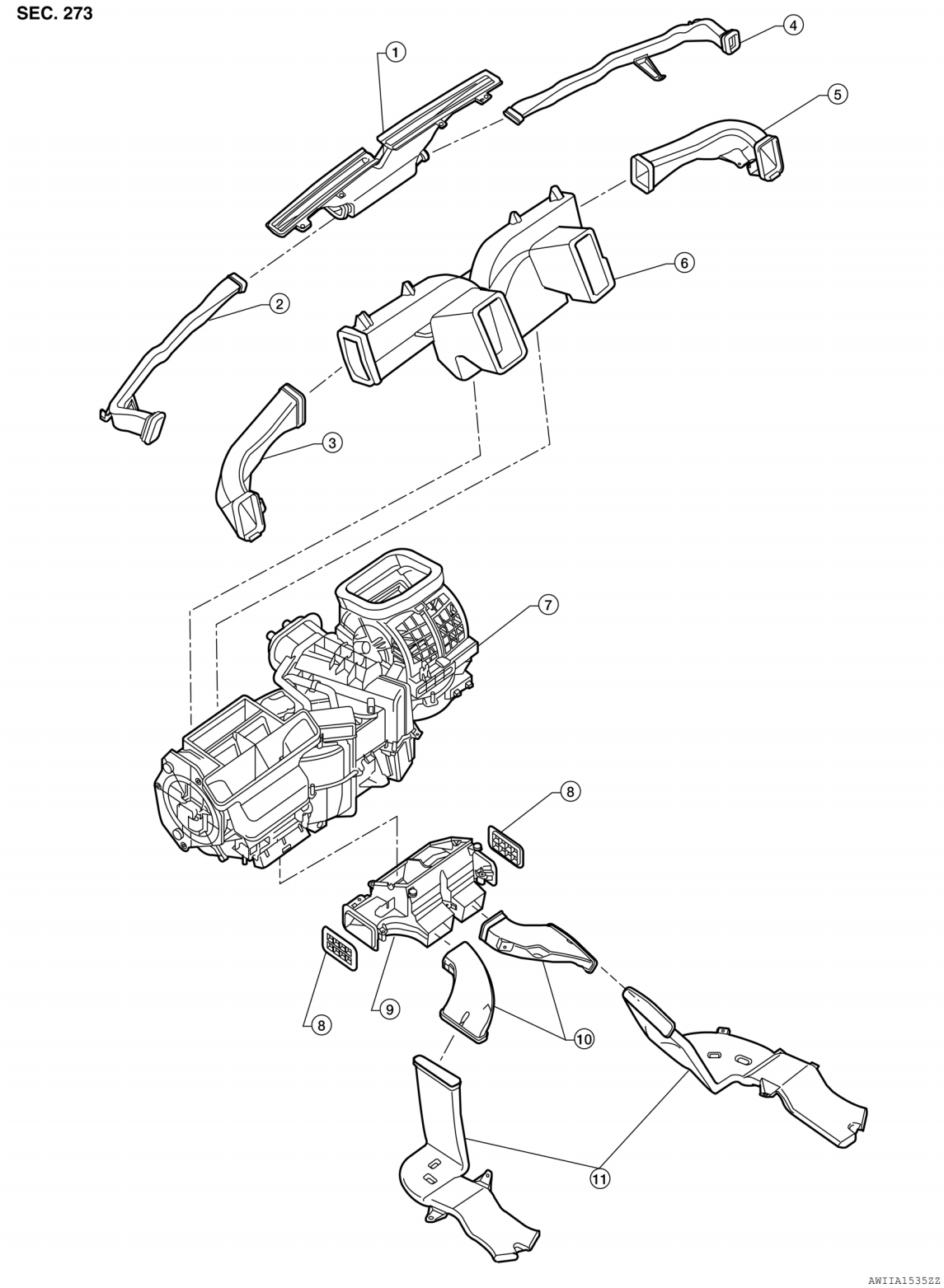

1. Defroster nozzle
2. LH side demister duct
3. LH ventilator duct
4. RH side demister duct
5. RH ventilator duct
6. Center ventilator duct

7. Front heater and cooling unit assembly
8. Floor connector duct grilles
9. Floor connector duct
10. Front floor ducts
11. Rear floor ducts

Grilles

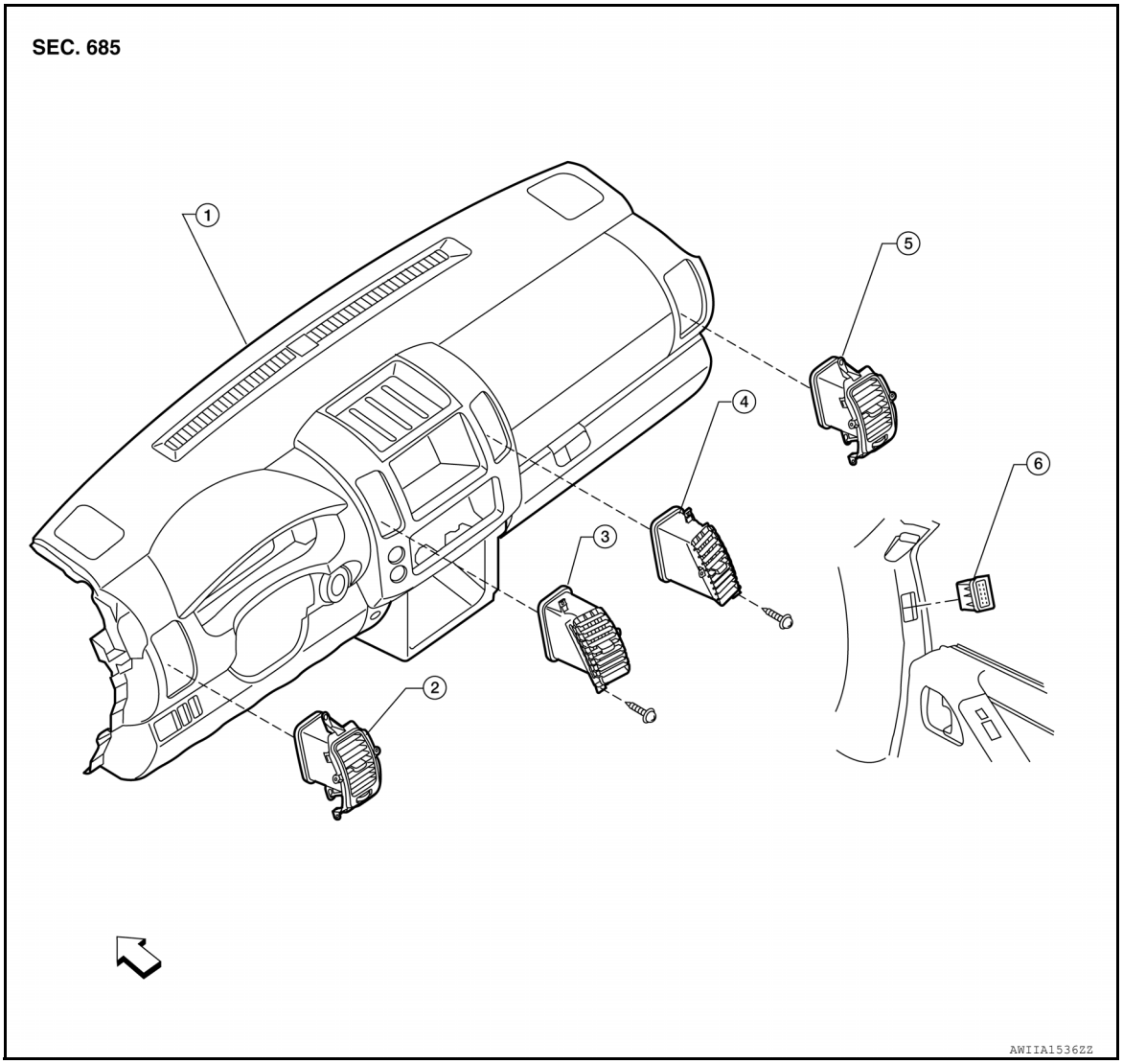

1. Instrument panel
2. LH side ventilator grille
3. LH ventilator grille
4. RH ventilator grille
5. RH side ventilator grille
6. RH side demister grille

⇦ Vehicle front

Removal and Installation

INFOID:0000000007327183

DEFROSTER NOZZLE

Removal

1. Remove the heater and cooling unit assembly. Refer to VTL-12, "Removal and Installation".
2. Remove the defroster nozzle.

Installation

Installation is in the reverse order of removal.

RH AND LH SIDE DEMISTER DUCTS

Removal

1. Remove the heater and cooling unit assembly. Refer to VTL-12, "Removal and Installation".
2. Remove the RH or LH side demister duct.

Installation

Installation is in the reverse order of removal.

RH AND LH VENTILATOR DUCTS

Removal

1. Remove the heater and cooling unit assembly. Refer to VTL-12, "Removal and Installation".
2. Remove the RH or LH ventilator duct.

Installation

Installation is in the reverse order of removal.

CENTER VENTILATOR DUCT

Removal

1. Remove the heater and cooling unit assembly. Refer to VTL-12, "Removal and Installation".
2. Remove the defroster nozzle.
3. Remove the RH and LH ventilator ducts.
4. Remove the RH and LH side demister ducts.
5. Remove the center ventilator duct.

Installation

Installation is in the reverse order of removal.

FLOOR CONNECTOR DUCT

Removal

1. Remove the heater and cooling unit assembly. Refer to VTL-12, "Removal and Installation".
2. Remove the floor connector duct.

Installation

Installation is in the reverse order of removal.

FRONT AND REAR FLOOR DUCTS

Removal

1. Remove the floor carpet. Refer to INT-23, "Removal and Installation".
2. Remove the clips and front and rear floor ducts.

Installation

Installation is in the reverse order of removal.

GRILLES

Removal

1. Remove the interior trim panel as necessary that contains the grille to be removed. Refer to INT-18, "Component" and IP-14, "Exploded View".
2. Remove the grille from the interior trim panel.

Installation

Installation is in the reverse order of removal.