FIAT® 500X

2017

OWNER'S MANUAL

VEHICLES SOLD IN CANADA

With respect to any Vehicles Sold in Canada, the name FCA US LLC shall be deemed to be deleted and the name FCA Canada Inc. used in substitution therefore.

DRIVING AND ALCOHOL

Drunken driving is one of the most frequent causes of accidents.

Your driving ability can be seriously impaired with blood alcohol levels far below the legal minimum. If you are drinking, don't drive. Ride with a designated non-drinking driver, call a cab, a friend, or use public transportation.

WARNING!
Driving after drinking can lead to an accident. Your perceptions are less sharp, your reflexes are slower, and your judgment is impaired when you have been drinking. Never drink and then drive.

This manual illustrates and describes the operation of features and equipment that are either standard or optional on this vehicle. This manual may also include a description of features and equipment that are no longer available or were not ordered on this vehicle. Please disregard any features and equipment described in this manual that are not on this vehicle.

FCA US LLC reserves the right to make changes in design and specifications, and/or make additions to or improvements to its products without imposing any obligation upon itself to install them on products previously manufactured.

Copyright © 2016 FCA US LLC

TABLE OF CONTENTS

SECTION		PAGE
1	INTRODUCTION	3
2	CUSTOMER ASSISTANCE	7
3	GRAPHICAL TABLE OF CONTENTS	13
4	GETTING TO KNOW YOUR VEHICLE	19
5	GETTING TO KNOW YOUR INSTRUMENT PANEL	119
6	SAFETY	153
7	STARTING AND OPERATING	211
8	IN CASE OF EMERGENCY	287
9	MAINTAINING AND CARING FOR YOUR VEHICLE	341
10	TECHNICAL DATA	403
11	MULTIMEDIA	411
12	INDEX	459

INTRODUCTION

CONTENTS

- INTRODUCTION 4
- HOW TO USE THIS MANUAL 4
- WARNINGS AND CAUTIONS 5
- VEHICLE MODIFICATIONS/ALTERATIONS . . .6
- ROLLOVER WARNING 6

INTRODUCTION

Congratulations on selecting your new vehicle. Be assured that it represents precision workmanship, distinctive styling, and high quality.

This Owner's Manual has been prepared with the assistance of service and engineering specialists to acquaint you with the operation and maintenance of your vehicle. It is supplemented by Warranty Information, and various customer-oriented documents. Please take the time to read these publications carefully. Following the instructions and recommendations in this manual will help assure safe and enjoyable operation of your vehicle.

The enclosed Warranty Information lists the services that FCA US LLC offers to its customers:

- The Warranty with terms and conditions for maintaining its validity
- The range of additional services available to FCA US LLC customers

NOTE: After reviewing the owner information, it should be stored in the vehicle for convenient referencing and remain with the vehicle when sold.

When it comes to service, remember that your authorized dealer knows your vehicle best, has factory-trained technicians and genuine MOPAR® parts, and cares about your satisfaction.

HOW TO USE THIS MANUAL

Consult the Table of Contents to determine which section contains the information you desire.

Since the specification of your vehicle depends on the items of equipment ordered, certain descriptions and illustrations may differ from your vehicle's equipment.

The detailed index at the back of this Owner's Manual contains a complete listing of all subjects.

Consult the following table for a description of the symbols that may be used on your vehicle or throughout this Owner's Manual:

WARNINGS AND CAUTIONS

This Owner's Manual contains **WARNINGS** against operating procedures that could result in a collision, bodily injury and/or death. It also contains **CAUTIONS** against procedures that could result in damage to your vehicle. If you do not read this entire Owner's Manual, you may miss important information. Observe all Warnings and Cautions.

VEHICLE MODIFICATIONS/ALTERATIONS

WARNING!

Any modifications or alterations to this vehicle could seriously affect its roadworthiness and safety and may lead to a collision resulting in serious injury or death.

ROLLOVER WARNING

Utility vehicles have a significantly higher rollover rate than other types of vehicles. This vehicle has a higher ground clearance and a higher center of gravity than many passenger vehicles. It is capable of performing better in a wide variety of off-road applications. Driven in an unsafe manner, all vehicles can go out of control. Because of the higher center of gravity, if this vehicle is out of control it may roll over while some other vehicles may not.

Do not attempt sharp turns, abrupt maneuvers, or other unsafe driving actions that can cause loss of vehicle control. Failure to operate this vehicle safely may result in a collision, rollover of the vehicle, and severe or fatal injury. Drive carefully.

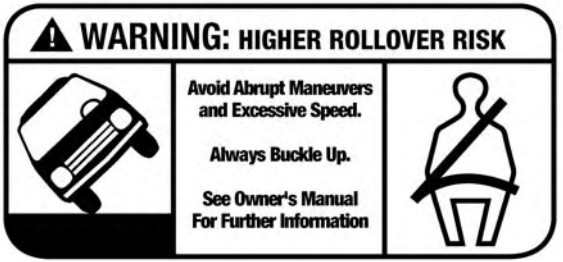

80bfe0f0

Rollover Warning Label

Failure to use the driver and passenger seat belts provided is a major cause of severe or fatal injury. In fact, the U.S. government notes that the universal use of existing seat belts could cut the highway death toll by 10,000 or more each year and could reduce disabling injuries by two million annually. In a rollover crash, an unbelted person is significantly more likely to die than a person wearing a seat belt. Always buckle up.

CUSTOMER ASSISTANCE

CONTENTS

- SUGGESTIONS FOR OBTAINING SERVICE FOR YOUR VEHICLE 8
  - Prepare For The Appointment 8
  - Prepare A List 8
  - Be Reasonable With Requests. 8
- IF YOU NEED ASSISTANCE 8
  - FIAT Customer Center 9
  - FIAT Canada Customer Center. 9
  - In Mexico Contact. 9
  - Puerto Rico And U.S. Virgin Islands 9
  - Customer Assistance For The Hearing Or Speech Impaired (TDD/TTY) 10
  - Service Contract 10
- WARRANTY INFORMATION 11
- REPORTING SAFETY DEFECTS 11
  - In The 50 United States And Washington, D.C..11
  - In Canada. 11
- PUBLICATION ORDER FORMS 12

SUGGESTIONS FOR OBTAINING SERVICE FOR YOUR VEHICLE

Prepare For The Appointment

If you are having warranty work done, be sure to bring the right papers with you, as well as your warranty folder. All work to be performed may not be covered by the warranty. Discuss additional charges with the service manager. Keep a maintenance log of your vehicle's service history, as this can often provide a clue to the current problem.

Prepare A List

Make a written list of your vehicle's problems or the specific work you want done. If you've had an accident or work done that is not on your maintenance log, let the service advisor know.

Be Reasonable With Requests

If you list a number of items and you must have your vehicle by the end of the day, discuss the situation with the service advisor and list the items in order of priority. At many authorized dealers, you may obtain a rental vehicle at a minimal daily charge. If you need a rental, it is advisable to make these arrangements when you call for an appointment.

IF YOU NEED ASSISTANCE

The manufacturer and its authorized dealer are vitally interested in your satisfaction. We want you to be happy with our products and services.

Warranty service must be done by an authorized dealer. We strongly recommend that you take the vehicle to an authorized dealer. They know your vehicle the best, and are most concerned that you get prompt and high quality service. The manufacturer's authorized dealer have the facilities, factory-trained technicians, special tools, and the latest information to ensure the vehicle is fixed correctly and in a timely manner.

This is why you should always talk to an authorized dealer service manager first. Most matters can be resolved with this process.

- If for some reason you are still not satisfied, talk to the general manager or owner of the authorized dealer. They want to know if you need assistance.
- If an authorized dealer is unable to resolve the concern, you may contact the manufacturer's customer center.

Any communication to the manufacturer's customer center should include the following information:

- Owner's name and address
- Owner's telephone number (home and office)
- Authorized dealer name
- Vehicle Identification Number (VIN)
- Vehicle delivery date and mileage

FIAT Customer Center

P.O. Box 21–8004 Auburn Hills, MI 48321–8004

Phone: 1-888-242-6342

FIAT Canada Customer Center

P.O. Box 1621

Windsor, Ontario N9A 4H6

Phone: (800) 465-2001 English / (800) 387-9983 French

In Mexico Contact

Av. Prolongacion Paseo de la Reforma, 1240

Sante Fe C.P. 05109

Mexico, D. F.

In Mexico City: 5081-7568

Outside Mexico City: 1-800-505-1300

Puerto Rico And U.S. Virgin Islands

Customer Service Chrysler International Services LLC

P.O. Box 191857

San Juan 00919-1857

Tel.: (787) 782-5757

Fax: (787) 782-3345

Customer Assistance For The Hearing Or Speech Impaired (TDD/TTY)

To assist customers who have hearing difficulties, the manufacturer has installed special TDD (Telecommunication Devices for the Deaf) equipment at its customer center. Any hearing or speech impaired customer, who has access to a TDD or a conventional teletypewriter (TTY) in the United States, can communicate with the manufacturer by dialing 1-800-380-CHRY.

Canadian residents with hearing difficulties that require assistance can use the special needs relay service offered by Bell Canada. For TTY teletypewriter users, dial 711 and for Voice callers, dial 1-800-855-0511 to connect with a Bell Relay Service operator.

Service Contract

You may have purchased a service contract for a vehicle to help protect you from the high cost of unexpected repairs after the manufacturer's New Vehicle Limited Warranty expires. The manufacturer stands behind only the manufacturer's service contracts. If you purchased a manufacturer's service contract, you will receive Plan Provisions and an Owner Identification Card in the mail within three weeks of the vehicle delivery date. If you have any questions about the service contract, call the manufacturer's Service Contract National Customer Hotline at 1-800-521-9922 (Canadian residents, call (800) 465-2001 English / (800) 387-9983 French).

The manufacturer will not stand behind any service contract that is not the manufacturer's service contract. It is not responsible for any service contract other than the manufacturer's service contract. If you purchased a service contract that is not a manufacturer's service contract, and you require service after the manufacturer's New Vehicle Limited Warranty expires, please refer to the contract documents, and contact the person listed in those documents.

We appreciate that you have made a major investment when you purchased the vehicle. An authorized dealer has also made a major investment in facilities, tools, and training to assure that you are absolutely delighted with the ownership experience. You will be pleased with their sincere efforts to resolve any warranty issues or related concerns.

WARNING!

Engine exhaust (internal combustion engines only), some of its constituents, and certain vehicle components contain, or emit, chemicals known to the State of California to cause cancer and birth defects, or other reproductive harm. In addition, certain fluids contained in vehicles and certain products of component wear contain, or emit, chemicals known to the State of California to cause cancer and birth defects, or other reproductive harm.

WARRANTY INFORMATION

See the Warranty Information Booklet, for the terms and provisions of FCA US LLC warranties applicable to this vehicle and market.

REPORTING SAFETY DEFECTS

In The 50 United States And Washington, D.C.

If you believe that your vehicle has a defect that could cause a crash or cause injury or death, you should immediately inform the National Highway Traffic Safety Administration (NHTSA) in addition to notifying FCA US LLC.

If NHTSA receives similar complaints, it may open an investigation, and if it finds that a safety defect exists in a group of vehicles, it may order a recall and remedy campaign. However, NHTSA cannot become involved in individual problems between you, your authorized dealer or FCA US LLC.

To contact NHTSA, you may call the Vehicle Safety Hotline toll free at 1-888-327-4236 (TTY: 1-800-424-9153); or go to http://www.safercar.gov; or write to: Administrator, NHTSA, 1200 New Jersey Avenue, SE., West Building, Washington, D.C. 20590. You can also obtain other information about motor vehicle safety from http://www.safercar.gov.

In Canada

If you believe that your vehicle has a safety defect, you should contact the Customer Service Department immediately. Canadian customers who wish to report a safety defect to the Canadian government should contact Transport Canada, Motor Vehicle Defect Investigations and Recalls at 1-800-333-0510 or go to http://www.tc.gc.ca/roadsafety/.

PUBLICATION ORDER FORMS

To order the following manuals, you may use either the website or the phone numbers listed below. Visa, Mastercard, American Express, and Discover orders are accepted.

Service Manuals

These comprehensive Service Manuals provide the information that students and professional technicians need in diagnosing/troubleshooting, problem solving, maintaining, servicing, and repairing FCA US LLC vehicles. A complete working knowledge of the vehicle, system, and/or components is written in straightforward language with illustrations, diagrams, and charts.

Diagnostic Procedure Manuals

Diagnostic Procedure Manuals are filled with diagrams, charts and detailed illustrations. These practical manuals make it easy for students and technicians to find and fix problems on computer-controlled vehicle systems and features. They show exactly how to find and correct problems the first time, using step-by-step troubleshooting and drivability procedures, proven diagnostic tests, and a complete list of all tools and equipment.

Owner's Manuals

These Owner's Manuals have been prepared with the assistance of service and engineering specialists to acquaint you with specific FCA US LLC vehicles. Included are starting, operating, emergency and maintenance procedures as well as specifications, capabilities and safety tips.

Call toll free at:

- **1-800-890-4038 (U.S.)**
- **1-800-387-1143 (Canada)**

Or

Visit us on the Worldwide Web at:

- www.techauthority.com

GRAPHICAL TABLE OF CONTENTS

CONTENTS

- FRONT VIEW 14
- REAR VIEW 15
- INSTRUMENT PANEL 16
- INTERIOR. 17

FRONT VIEW

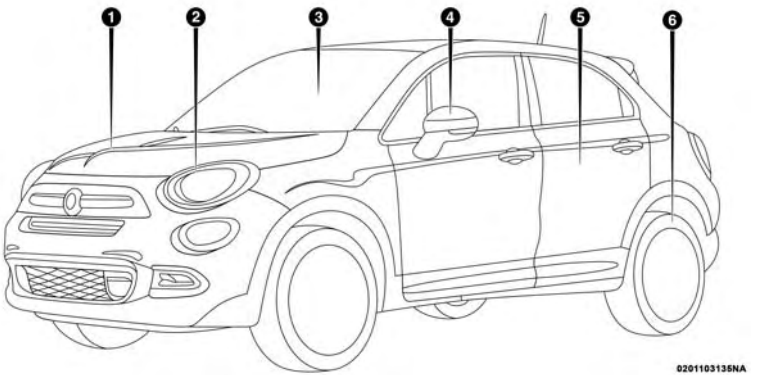

Front View

1 — Engine Compartment
2 — Headlights
3 — Windshield
4 — Outside Mirrors
5 — Doors
6 — Wheels

REAR VIEW

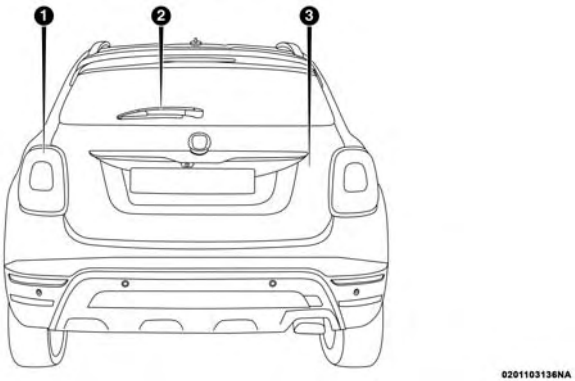

Rear View

1 — Rear Lights
2 — Rear Windshield Wiper
3 — Liftgate

INSTRUMENT PANEL

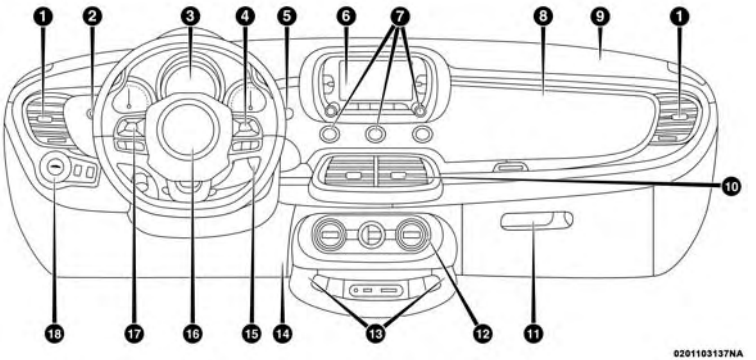

Instrument Panel

1 — Air Vents
2 — Multifunction Lever
3 — Instrument Cluster
4 — Speed Controls
5 — Windshield Wiper Lever
6 — Uconnect Radio
7 — Upper Switch Bank
8 — Upper Storage Compartment
9 — Passenger Front Air Bag
10 — Air Vents
11 — Lower Storage/Glove Compartment
12 — Climate Controls
13 — Lower Switch Bank
14 — Driver Side Knee Air Bag
15 — Ignition
16 — Driver Side Front Air Bag
17 — Instrument Cluster Display Controls
18 — Headlight Switch

INTERIOR

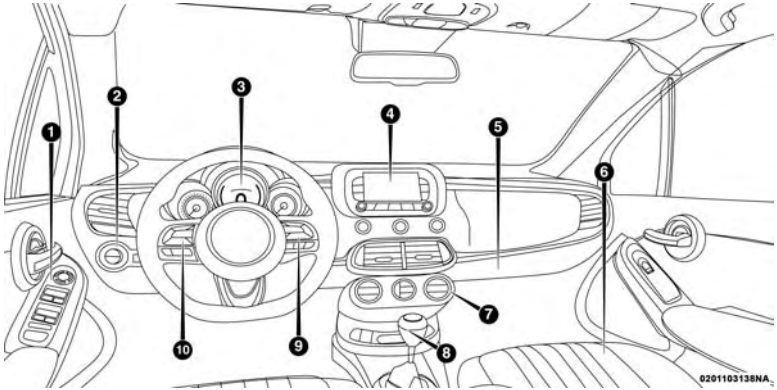

Interior Features

1 — Power Window Switches
2 — Headlight Switch
3 — Instrument Cluster
4 — Uconnect Radio
5 — Glove Compartment
6 — Seats
7 — Climate Controls
8 — Transmission Gear Selector (Automatic/Manual Options)
9 — Electronic Speed Controls
10 — Instrument Cluster Display Controls

GETTING TO KNOW YOUR VEHICLE

CONTENTS

■ KEYS 23

□ Electronic Key Fob 23

□ Key Fob Operation 24

□ Replacing The Battery In The Key Fob With Remote Control. 25

□ Request For Additional Keys 26

□ General Information 27

■ IGNITION SWITCH 27

□ Operation. 27

■ REMOTE STARTING SYSTEM — IF EQUIPPED 29

□ Remote Start Cancel Message — If Equipped. .30

□ How To Use Remote Start 30

□ To Enter Remote Start Mode. 31

□ To Exit Remote Start Mode Without Driving The Vehicle 31

□ To Exit Remote Start Mode And Drive The Vehicle. 31

□ Remote Start Comfort Systems — If Equipped 32

□ Remote Start Windshield Wiper De–Icer Activation — If Equipped 32

□ General Information 32

■ SENTRY KEY 32

□ General Information 33

■ VEHICLE SECURITY ALARM. 33

□ To Arm The System 34

□ To Disarm The System. 35

□ Disabling 36

■ DOORS 36
□ Manual Locking/Unlocking 36
□ Central Lock/Unlock. 37
□ Keyless Enter-N-Go 38
□ Child Locks 44
■ SEATS 46
□ Manual Adjustment Front Seats 46
□ Power Adjustment Front Seats — If Equipped .48
□ Heated Seats — If Equipped 49
□ Rear Seats 50
■ HEAD RESTRAINTS 53
□ Front Head Restraints 53
□ Rear Head Restraints. 54
■ STEERING WHEEL 55
□ Tilt/Telescoping Steering Column 55
□ Heated Steering Wheel — If Equipped 56
■ MIRRORS 57
□ Inside Day/Night Mirror 57
□ Auto Dimming Mirror — If Equipped. 57
□ Outside Mirrors 58
□ Heated Mirrors — If Equipped 59
■ BLIND SPOT MONITORING (BSM) — IF EQUIPPED 59
□ Rear Cross Path (RCP) 64
□ Mode Of Operation. 65
□ Blind Spot Monitoring Fault Warnings 66
□ General Information 66
■ EXTERIOR LIGHTS 66
□ Headlights 66
□ Automatic Lighting — If Equipped 67
□ Daytime Running Lights (DRL) — If Equipped 68
□ Front Fog Lights — If Equipped 68
□ Parking Lights 68
□ Headlight Delay 68

- High Beams 69
- Turn Signals 70

■ INTERIOR LIGHTS 70
- Front Courtesy Light 70
- Rear Dome Light — If Equipped 73
- Cargo Area Lights 73
- Instrument Panel Dimmer And Ambient Light Control 74

■ WIPERS AND WASHERS 75
- Front Wiper Operation 75
- Rain Sensor — If Equipped 76
- Rear Window Wiper/Washer 78
- Windshield Wiper De-Icer — If Equipped 79

■ CLIMATE CONTROLS 80
- Air Outlet And Diffuser Locations — Passenger Compartment 80
- Manual Climate Controls Overview 81
- Automatic Climate Control Overview 86
- Operating Tips 95

■ WINDOWS 98
- Driver's Door Controls 98

■ POWER SUNROOF — IF EQUIPPED 100
- Opening The Sunroof 101
- Closing The Sunroof 102
- Wind Buffeting 102
- Sun Shade 102
- Anti-Pinch Safety Device 102
- Emergency Operation 102
- Power Sunroof Relearn Procedure 103

■ HOOD 104
- Opening 104
- Closing 105

■ LIFTGATE 106
- Opening 106
- Closing 107

- Cargo Area Features 107

■ INTERNAL EQUIPMENT 110

- Glove Compartments 110
- Sun Visors “Slide-On-Rod” 111
- Power Outlets 112
- Cigar Lighter — If Equipped 113
- Ashtray — If Equipped 115
- Front Armrest 115
- Cupholders 116
- Grab Handles 117

■ ROOF LUGGAGE RACK — IF EQUIPPED . . .117

KEYS

Electronic Key Fob

On versions equipped with "Keyless Enter-N-Go," the car is equipped with an electronic key fob.

The key fob with Remote Control contains a Remote Keyless Entry key fob. The Remote Keyless Entry system allows you to lock or unlock the doors and liftgate or activate the Panic Alarm from distances up to approximately 66 ft (20 m) using a handheld key fob. The key fob does not need to be pointed at the vehicle to activate the system.

NOTE: In the ON/RUN position, the trunk release button is disabled. Only the unlock button is enabled.

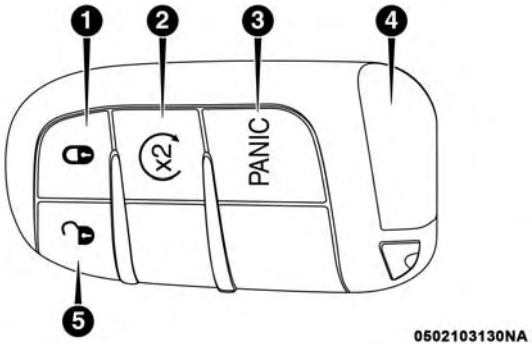

Keyless Enter-N-Go Key Fob

1 — Door Lock Button
2 — Remote Start Button
3 — Panic Button
4 — Emergency Key
5 — Door Unlock Button

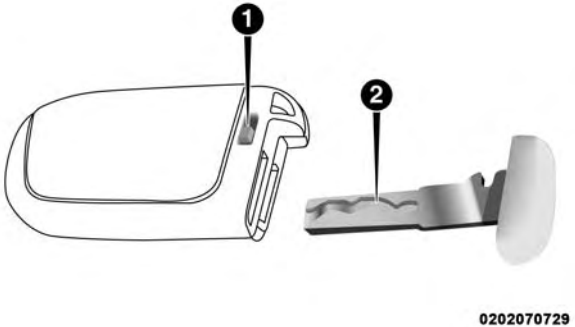

Emergency Key Release/Removal

1 — Emergency Key Release Button
2 — Emergency Key

Key Fob Operation

Unlocking Doors And Liftgate

The driver's door may be unlocked by inserting the vehicle key into the exterior driver's door lock cylinder. To unlock all the doors, push the interior power door unlock button on the door panel.

Push and release the unlock button on the key fob once to unlock the driver's door or twice within five seconds to unlock all doors and the liftgate. The turn signal lights will flash to acknowledge the unlock signal. The illuminated entry system will also turn on.

1st Press Of Key Fob Unlocks Feature

This feature lets you program the system to unlock either the driver's door or all doors on the first push of the unlock button on the key fob. To change the current setting, refer to "Uconnect Settings" in "Multimedia" for further information.

NOTE: If the vehicle is equipped with Passive Entry, refer to "Keyless Enter-N-Go" in "Getting To Know Your Vehicle" for further information.

Locking Doors And Liftgate

The doors may be locked by inserting the vehicle key into the exterior driver's door lock cylinder.

Push and release the lock button on the key fob to lock all doors and liftgate. The turn signal lights will flash and the horn will chirp to acknowledge the signal. Settings in the radio can change to lights only, chirp only, or both.

If the vehicle is equipped with Passive Entry, refer to "Keyless Enter-N-Go" in "Getting To Know Your Vehicle" for further information.

Key Fob With Remote Control And Integrated Vehicle Key

If one or more doors are open, or the liftgate is open, the doors will lock when you push the lock button on the key fob. This is signaled by a quick flash of the turn signals.

Vehicles With Keyless Enter-N-Go

If one or more doors are open, or the liftgate is open, the doors will lock when you push the lock button on the key fob. The doors will unlock again only if the key is inside the passenger compartment.

NOTE:

- The current setting can be changed within the instrument cluster display menu or in the Uconnect Settings so that the system will allow/inhibit the ability to lock the doors when one or more of them are open.
- Refer to "Instrument Cluster Display" in "Getting To Know Your Instrument Panel" or "Uconnect Settings" in "Multimedia" for further information.

Replacing The Battery In The Key Fob With Remote Control

The recommended replacement battery is one CR2032 battery.

NOTE:

- Perchlorate Material — special handling may apply. See www.dtsc.ca.gov/hazardouswaste/perchlorate
- Do not touch the battery terminals that are on the back housing or the printed circuit board.

Separating Keyless Enter-N-Go Key Fob Case

1. Remove the emergency key by sliding the mechanical latch on the back of the key fob sideways with your thumb. Then, pull the key out with your other hand.

2. Separating key fob halves requires screw removal (if equipped) and gently prying the two halves of the key fob apart with the emergency key. Make sure not to damage the seal during removal.

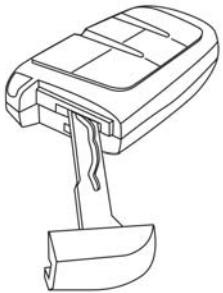

Separating Keyless Enter-N-Go Key Fob Case

3. Remove the battery by turning the back cover over (battery facing downward) and tapping it lightly on a solid surface such as a table or similar surface. Then, replace the battery.

When replacing the battery, match the + sign on the battery to the + sign on the inside of the battery clip, located on the back cover. Avoid touching the new battery with your fingers. Skin oils may cause battery deterioration. If you touch a battery, clean it with rubbing alcohol.

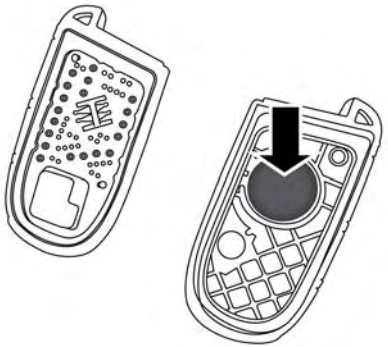

Keyless Enter-N-Go Battery

To assemble the key fob case, snap the two halves together and insert the emergency key.

Request For Additional Keys

NOTE: Only key fobs that are programmed to the vehicle electronics can be used to start and operate the vehicle. Once a key fob is programmed to a vehicle, it cannot be programmed to any other vehicle.

CAUTION!

- **Always remove the key fobs from the vehicle and lock all doors when leaving the vehicle unattended.**
- **For vehicles equipped with Keyless Enter-N-Go — Ignition, always remember to place the ignition in the OFF mode.**

Duplication of key fobs may be performed at an authorized dealer. This procedure consists of programming a blank key fob to the vehicle electronics. A blank key fob is one that has never been programmed.

NOTE: When having the Sentry Key Immobilizer System serviced, bring all vehicle keys with you to an authorized dealer.

General Information

The following regulatory statement applies to all Radio Frequency (RF) devices equipped in this vehicle:

This device complies with Part 15 of the FCC Rules and with Industry Canada license-exempt RSS standard(s). Operation is subject to the following two conditions:

1. This device may not cause harmful interference, and
2. This device must accept any interference received, including interference that may cause undesired operation.

NOTE: Changes or modifications not expressly approved by the party responsible for compliance could void the user's authority to operate the equipment.

IGNITION SWITCH

Operation

Your vehicle uses a keyless ignition system. The keyless ignition system consists of a Remote Keyless Entry key fob with a Keyless Push Button Ignition.

Electronic Key

This Keyless Enter-N-Go system feature allows the driver to operate the ignition switch with the push of a button as long as the key fob is in the passenger compartment.

The Keyless Push Button Ignition has three operating positions. The three positions are STOP, RUN, and START.

NOTE: If the ignition switch does not change with the push of a button, the key fob may have a low or dead battery. In this situation, a back up method can be used to operate the ignition switch. Put the nose side (side opposite of the emergency key) of the key fob against the ENGINE START/STOP button and push to operate the ignition switch.

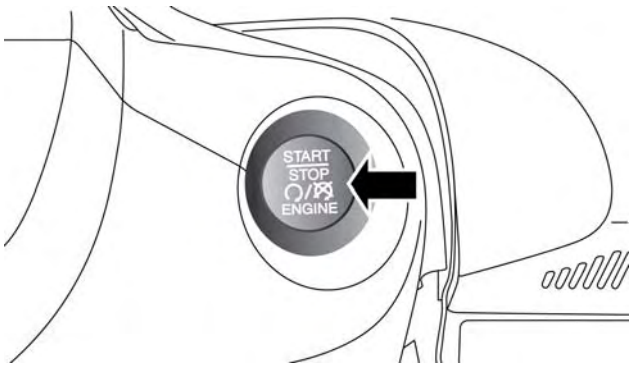

Engine Start Stop Button

The Keyless Push Button Ignition can be placed in the following positions:

STOP

- The engine is stopped.
- Some electrical devices (e.g. Central locking, alarm, etc.) are still available.

RUN

- Driving position.
- All the electrical devices are available.

START

- Start the engine.

NOTE: The vehicle will not start if the key fob is located inside the cargo area and the liftgate is opened.

WARNING!

- **When leaving the vehicle, always remove the key fob from the vehicle and lock your vehicle.**
- **Never leave children alone in a vehicle, or with access to an unlocked vehicle.**

(Continued)

WARNING! ***(Continued)***

- **Allowing children to be in a vehicle unattended is dangerous for a number of reasons. A child or others could be seriously or fatally injured. Children should be warned not to touch the parking brake, brake pedal or the gear selector.**
- **Do not leave the key fob in or near the vehicle, or in a location accessible to children, and do not leave the ignition of a vehicle equipped with Keyless Enter-N-Go in the ON/RUN mode. A child could operate power windows, other controls, or move the vehicle.**
- **Do not leave children or animals inside parked vehicles in hot weather. Interior heat build-up may cause serious injury or death.**

CAUTION!

An unlocked car is an invitation. Always remove the key from the ignition and lock all doors when leaving the vehicle unattended.

NOTE: Refer to "Starting the Engine" in "Starting And Operating" for further information.

General Information

The following regulatory statement applies to all radio frequency (RF) devices equipped in this vehicle:

This device complies with Part 15 of the FCC Rules and with Industry Canada license-exempt RSS standard(s). Operation is subject to the following two conditions:

1. This device may not cause harmful interference, and
2. This device must accept any interference received, including interference that may cause undesired operation.

NOTE: Changes or modifications not expressly approved by the party responsible for compliance could void the user's authority to operate the equipment.

REMOTE STARTING SYSTEM — IF EQUIPPED

This system uses the key fob to start the engine conveniently from outside the vehicle while still maintaining security. The system has a range of 328 ft (100 m).

The Remote Starting System also activates the Climate Control and (if equipped) the optional heated seats and optional heated steering wheel depending on temperatures outside and inside the car.

NOTE:

- The vehicle must be equipped with an automatic transmission to be equipped with Remote Start.
- Obstructions between the vehicle and key fob may reduce this range.

Remote Start Cancel Message — If Equipped

The following messages will display in the instrument cluster if the vehicle fails to remote start or exits remote start prematurely:

- Remote Start Cancelled — Door Open
- Remote Start Cancelled — Hood Open
- Remote Start Cancelled — Fuel Low
- Remote Start Cancelled — Liftgate Open
- Remote Start Disabled — Start Vehicle To Reset
- Remote Start Cancelled — Too Cold
- Remote Start Cancelled — Time Expired

The message will stay active until the ignition is placed in the ON/RUN position.

How To Use Remote Start

All of the following conditions must be met before the engine will remote start:

- Gear Selector in PARK
- Doors closed
- Hood closed
- Liftgate closed
- Hazard switch off
- Brake switch inactive (brake pedal not pushed)
- Battery at an acceptable charge level
- PANIC button not pushed
- System not disabled from previous remote start event
- Vehicle alarm system indicator flashing
- Ignition in STOP/OFF position
- Fuel level meets minimum requirement
- Vehicle security alarm is not signaling an intrusion

WARNING!

- **Do not start or run an engine in a closed garage or confined area. Exhaust gas contains Carbon Monoxide (CO) which is odorless and colorless. Carbon Monoxide is poisonous and can cause serious injury or death when inhaled.**
- **Keep key fobs away from children. Operation of the Remote Start System, windows, door locks or other controls could cause serious injury or death.**

To Enter Remote Start Mode

Push and release the remote start button on the key fob twice within five seconds. The vehicle doors will lock, the turn signals will flash, and the horn will chirp twice. Then, the engine will start, and the vehicle will remain in the Remote Start mode for a 15-minute cycle.

NOTE:

- If an engine fault is present or fuel level is low, the vehicle will start and then shut down in 10 seconds.
- The park lamps will turn on and remain on during remote start mode.
- For security, power window operation is disabled when the vehicle is in the remote start mode.

To Exit Remote Start Mode Without Driving The Vehicle

Push and release the remote start button one time or allow the engine to run for the entire 15-minute cycle.

NOTE: To avoid unintentional shutdowns, the system will disable with a one time push of the remote start button for two seconds after receiving a valid remote start request.

To Exit Remote Start Mode And Drive The Vehicle

Before the end of 15-minute cycle, push and release the unlock button on the key fob to unlock the doors and disarm the vehicle security alarm (if equipped). Then, prior to the end of the 15-minute cycle, for vehicles equipped with the Keyless Enter-N-Go feature, push and release the keyless ignition button.

NOTE: For vehicles equipped with the Keyless Enter-N-Go feature, the message “Remote Start Active — Push Start Button” will display in the instrument cluster display until you push the keyless ignition button.

Remote Start Comfort Systems — If Equipped

When Remote Start is activated, the heated steering wheel and driver heated seat features will automatically turn on in cold weather. These features will stay on through the duration of remote start or until the ignition switch is cycled to the ON/RUN position.

NOTE: The Remote Start Comfort System can be activated and deactivated through the Uconnect Settings. For more information on Remote Start Comfort System operation, refer to "Uconnect Settings" in "Multimedia."

Remote Start Windshield Wiper De–Icer Activation — If Equipped

When remote start is active and the outside ambient temperature is less than 40° F (4.4° C), the Windshield Wiper De-Icer will be enabled. Exiting Remote Start will resume previous operation, except if the Windshield Wiper De-Icer is active. The Windshield Wiper De-Icer timer and operation will continue.

General Information

The following regulatory statement applies to all Radio Frequency (RF) devices equipped in this vehicle:

This device complies with Part 15 of the FCC Rules and with Industry Canada license-exempt RSS standard(s). Operation is subject to the following two conditions:

1. This device may not cause harmful interference, and
2. This device must accept any interference received, including interference that may cause undesired operation.

NOTE: Changes or modifications not expressly approved by the party responsible for compliance could void the user's authority to operate the equipment.

SENTRY KEY

The Sentry Key Immobilizer system prevents unauthorized vehicle operation by disabling the engine. The system does not need to be armed or activated. Operation is automatic, regardless of whether the vehicle is locked or unlocked.

The system uses a key fob with a Keyless Push Button Ignition, and a RF receiver to prevent unauthorized vehicle operation. Therefore, only key fobs that are programmed to the vehicle can be used to start and

operate the vehicle. The system will not allow the engine to crank if an invalid key fob tries to start the engine.

After placing the ignition to the ON/RUN position, if there is a problem with the system, the vehicle security light will turn on. This condition will result in the engine being shut off after two seconds.

Should this occur, have the vehicle serviced as soon as possible by an authorized dealer.

CAUTION!

- **Do not make modifications or alterations to the immobilizer system. Modifications or alterations to the immobilization system may result in a loss of security protection.**
- **The Sentry Key Immobilizer system is not compatible with some aftermarket remote starting systems. Use of these systems may result in vehicle starting problems and loss of security protection.**

General Information

The following regulatory statement applies to all radio frequency (RF) devices equipped in this vehicle:

This device complies with Part 15 of the FCC Rules and with Industry Canada license-exempt RSS standard(s). Operation is subject to the following two conditions:

1. This device may not cause harmful interference, and
2. This device must accept any interference received, including interference that may cause undesired operation.

NOTE: Changes or modifications not expressly approved by the party responsible for compliance could void the user's authority to operate the equipment.

VEHICLE SECURITY ALARM

The vehicle security alarm monitors the vehicle doors for unauthorized entry and if the ignition switch is cycled to the ON/RUN position without a valid key. While the vehicle security alarm is armed, interior switches for door locks and liftgate release are disabled.

If something triggers the alarm, the vehicle security alarm will provide the following audible and visible signals:

- Horn will pulse.
- Park lamps and/or turn signals will flash.
- Vehicle security light in the instrument cluster will flash.

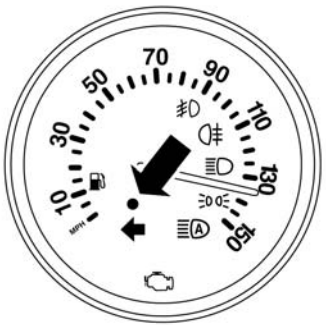

Vehicle Security Light Location

To Arm The System

Follow these steps to arm the vehicle security alarm:

1. Make sure the vehicles ignition is cycled to the STOP/OFF position (refer to "Starting The Engine" in "Starting And Operating" for further information).
   - For vehicles equipped with Keyless Enter-N-Go, make sure the vehicle ignition system is OFF.
2. Perform one of the following methods to lock the vehicle:
   - Push lock on the interior power door lock switch with the driver and/or passenger door open.
   - Push the lock button on the exterior Passive Entry Door Handle with a valid key fob available in the same exterior zone (for further information, refer to "Keyless Enter-N-Go" in "Getting To Know Your Vehicle").
   - Push the lock button on the key fob.
3. If any doors are open, close them.

NOTE:

- If a second chime is heard after approximately four seconds from arming the alarm, disarm the alarm by pushing the unlock button. Check for the correct closure of doors and liftgate, then reactivate the system by following steps 1 and 2.
- If a second chime is heard after approximately four seconds from arming the alarm, even with the doors and liftgate properly closed, a fault may have occurred during the arming operation. If this occurs, contact your authorized dealer.

To Disarm The System

The vehicle security alarm can be disarmed using any of the following methods:

- Push the unlock button on the key fob.
- Grasp the Passive Entry Unlock Door Handle with a valid key fob available in the same exterior zone (if equipped). Refer to "Keyless Enter-N-Go" in "Getting To Know Your Vehicle" for further information.
- Cycle the vehicle ignition system out of the STOP/OFF/LOCK position.
  - For vehicles equipped with Keyless Enter-N-Go, push the Keyless Enter-N-Go START/STOP button (requires at least one valid key fob in the vehicle).

NOTE:

- The driver's door key cylinder cannot arm or disarm the vehicle security alarm.
- When the vehicle security alarm is armed, the interior power door lock switches will not unlock the doors.

The vehicle security alarm is designed to protect your vehicle. However, you can create conditions where the system will give you a false alarm. If one of the previously described arming sequences has occurred, the vehicle security alarm will arm regardless of whether you are in the vehicle or not. If you remain in the vehicle and open a door, the alarm will sound. If this occurs, disarm the vehicle security alarm.

If the vehicle security alarm is armed and the battery becomes disconnected, the vehicle security alarm will remain armed when the battery is reconnected.

Disabling

To completely disable the alarm (e.g. in the case of long inactivity of the car), lock the doors by turning the vehicle key in the exterior door lock cylinder.

NOTE: If the batteries in the key fob discharge in the event of a failure to the system, or to switch off the alarm, place the ignition in the ON/RUN position.

DOORS

Manual Locking/Unlocking

To lock each door from the inside, rotate the door lock button on each door trim panel forward. To unlock the doors from the inside, pull the inside door handle to the first detent or rotate the door lock button until the lock symbol is no longer visible.

If the lock symbol is visible when the door is shut, the door will lock. Therefore, make sure the key fob is not inside the vehicle before closing the door.

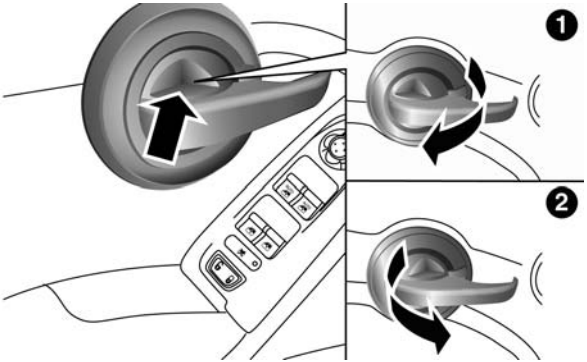

Manual Lock/Unlock Switch

1 — Door Unlocked
2 — Door Locked

NOTE: The manual lock knob unlocks each individual door separately.

WARNING!

- **When leaving the vehicle, always remove the key fob from the vehicle and lock your vehicle.**
- **Never leave children alone in a vehicle, or with access to an unlocked vehicle.**
- **Allowing children to be in a vehicle unattended is dangerous for a number of reasons. A child or others could be seriously or fatally injured. Children should be warned not to touch the parking brake, brake pedal or the gear selector.**
- **Do not leave the key fob in or near the vehicle, or in a location accessible to children, and do not leave the ignition of a vehicle equipped with Keyless Enter-N-Go in the ON/RUN mode. A child could operate power windows, other controls, or move the vehicle.**
- **Do not leave children or animals inside parked vehicles in hot weather. Interior heat build-up may cause serious injury or death.**

CAUTION!

An unlocked car is an invitation. Always remove the key from the ignition and lock all doors when leaving the vehicle unattended.

Central Lock/Unlock

A power door lock switch is located on each of the front door trim panels. This switch is used to lock or unlock the doors and liftgate.

Locking/Unlocking From The Inside

Push the lock button on the driver or passenger door trim panel to lock the doors.

With the doors locked, push the unlock button to unlock the doors.

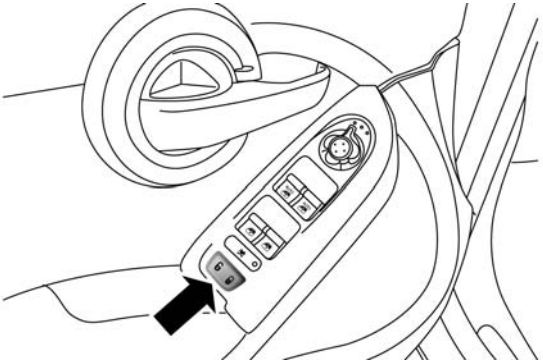

Power Lock/Unlock Switch

The doors can also be locked and unlocked with the Keyless Enter-N-Go (Passive Entry) system if equipped. For further information, refer to "Keyless Enter-N-Go" in "Getting To Know Your Vehicle."

If you push the power door lock switch while the ignition is in the ON/RUN position, and any front door is open, the power locks will not operate. This prevents you from accidentally locking the key in the vehicle. Placing the ignition in the STOP/OFF/LOCK position or closing the door will allow the locks to operate. If a door is open, and the ignition is in the ON/RUN position, a chime will sound as a reminder to remove the key.

NOTE: If all of the doors are closed properly, the door locks will lock automatically when the vehicle's speed exceeds 12 mph (20 km/h). Refer to "Uconnect Settings" in "Multimedia" for further information.

Keyless Enter-N-Go

The Passive Entry system is an enhancement to the vehicle's Remote Keyless Entry system and a feature of Keyless Enter-N-Go. This feature allows you to lock and unlock the vehicle's door(s) without having to push the key fob lock or unlock buttons.

NOTE:

- Passive Entry can be enabled or disabled. Refer to "Uconnect Settings" in "Multimedia" for further information.
- If wearing gloves on your hands, or if it has been raining/snowing on the Passive Entry door handle, the unlock sensitivity can be affected, resulting in a slower response time.

- If the vehicle is unlocked by the Passive Entry Door Handle, and no door goes ajar within 60 seconds, the vehicle will re-lock and if equipped, the security alarm will arm.
- The key fob may not be able to be detected by the vehicle keyless-go system if it is located next to a mobile phone, laptop or other electronic device; these devices may block the key fob's wireless signal and prevent the keyless-go system from starting the vehicle.

To Unlock From The Driver's Side

With a valid Passive Entry key fob within 5 ft (1.5 m) of the driver's door handle, grab the front driver door handle to unlock the driver's door automatically.

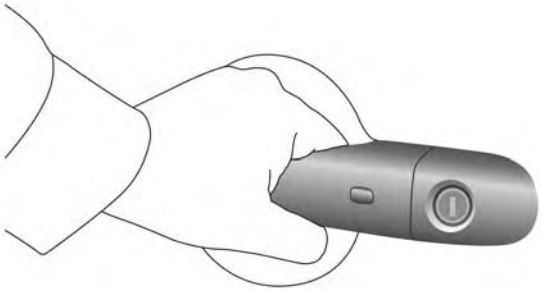

Grab The Door Handle To Unlock

NOTE: If "Unlock All Doors 1st Press" is programmed, all doors will unlock when you grab hold of the front driver's door handle. To select between "Unlock Driver Door 1st Press" and "Unlock All Doors 1st Press," refer to "Uconnect Settings" in "Multimedia" for further information.

To Unlock From The Passenger Side

With a valid Passive Entry key fob within 5 ft (1.5 m) of the passenger door handle, grab the front passenger door handle to unlock all four doors and the liftgate automatically.

NOTE: All doors will unlock when the front passenger door handle is grabbed regardless of the driver's door unlock preference setting ("Unlock Driver Door 1st Press" or "Unlock All Doors 1st Press").

To Lock The Vehicle's Doors And Liftgate

With one of the vehicle's Passive Entry key fob within 5 ft (1.5 m) of the driver or passenger front door handles, push the door handle lock button to lock all four doors.

Do NOT grab the door handle when pushing the door handle lock button. This could unlock the door(s).

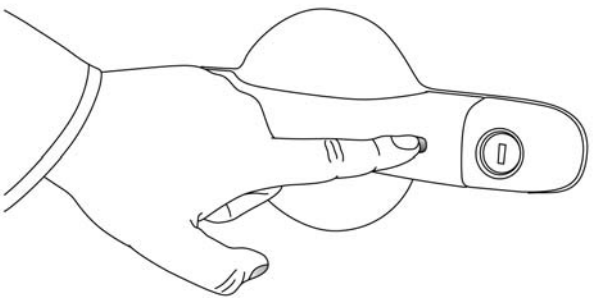

Push The Door Handle Button To Lock

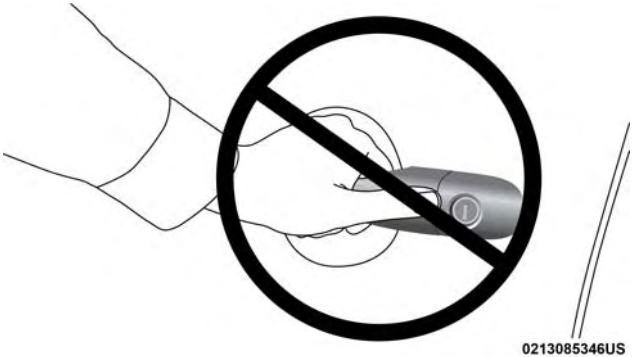

DO NOT Grab The Door Handle When Locking

NOTE: The Passive Entry system will not operate if the key fob battery is dead.

The vehicle doors can also be locked by using the lock button located on the vehicle's interior door panel.

Preventing Inadvertent Locking Of Passive Entry Key Fob In Vehicle (FOBIK-Safe)

To minimize the possibility of unintentionally locking a Passive Entry key fob inside your vehicle, the Passive Entry system is equipped with an automatic door unlock feature which will function if the ignition switch is in the OFF position.

FOBIK-Safe only executes in vehicles with Passive Entry. There are three situations that trigger a FOBIK-Safe search in any Passive Entry vehicle:

- A lock request is made by a valid Passive Entry key fob while a door is ajar.
- A lock request is made by the Passive Entry door handle while a door is ajar.
- A lock request is made by the door panel switch while the door is ajar.

When any of these situations occur, after all ajar doors are shut, the FOBIK-Safe search will be executed. If it finds a Passive Entry key fob inside the car, and it does not find any Passive Entry key fobs outside the car, then the car will unlock and alert the customer.

NOTE: The vehicle will only unlock the doors when a valid Passive Entry key fob is detected inside the vehicle, and no valid Passive Entry key fob is detected outside the vehicle. The vehicle will not unlock the doors when any of the following conditions are met:

- The doors are manually locked using the door lock knobs.
- There is a valid Passive Entry key fob outside the vehicle and within 5 ft (1.5 m) of either Passive Entry door handle.

Emergency Unlocking Driver Door

If the Remote Keyless Entry key fob battery is low or dead, the emergency key can be used to unlock the driver side door lock cylinder.

To release the emergency key, proceed as follows:

1. Slide the emergency key release button to the side.
2. Remove the emergency key from the key fob with remote control housing.

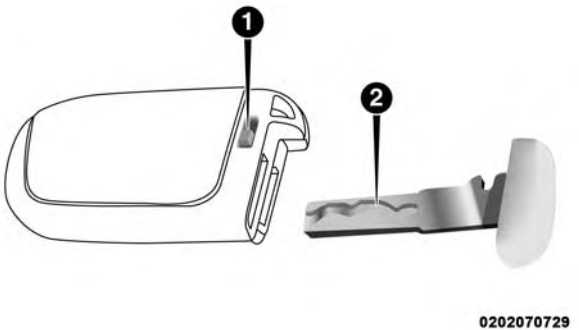

Emergency Key Release

1 — Emergency Key Release Button
2 — Emergency Key

NOTE: The Emergency Key can be inserted into the door lock cylinder in either direction.

WARNING!

- **Never leave children alone in a vehicle, or with access to an unlocked vehicle. Allowing children to be in a vehicle unattended is dangerous for a number of reasons. A child or others could be severely injured or killed. Children should be warned not to touch the parking brake, brake pedal, or the gear selector. Do not leave the key fob in or near the vehicle, or in a location accessible to children, and do not leave the ignition of a vehicle equipped with Keyless Enter- N-Go in the ON/RUN mode. A child could start the vehicle, operate power windows, other controls, or move the vehicle.**
- **Do not leave children or animals inside parked vehicles in hot weather. Interior heat build-up may cause them to be severely injured or killed.**

To Unlock/Enter The Liftgate

The liftgate Passive Entry unlock feature is built into the electronic liftgate release. With a valid Passive Entry key fob within 3 ft (1.0 m) of the liftgate, push the Electronic Liftgate release to open with one fluid motion.

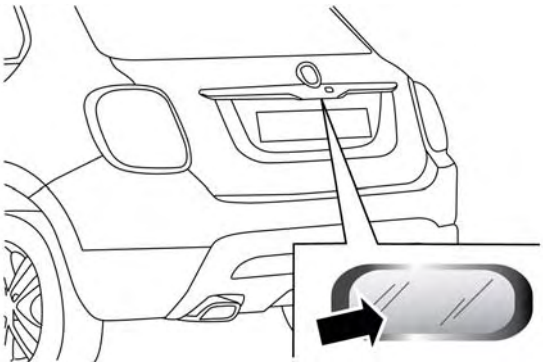

Electronic Liftgate Release Button

NOTE: If "Unlock All Doors 1st Press" is programmed in the instrument cluster display, if equipped, all doors will unlock when you push the Electronic Release. If "Unlock Driver Door 1st Press" is programmed in Uconnect, the liftgate will unlock when you push the electronic lock/unlock button on the liftgate. For further information, refer to "Uconnect Settings" in "Multimedia."

To Lock The Liftgate

With a valid Passive Entry key fob within 3 ft (1.0 m) of the liftgate, push the Passive Entry lock button located to the right of electronic liftgate release.

NOTE: The liftgate Passive Entry lock button will only lock the liftgate. The liftgate unlock feature is built into the electronic liftgate release.

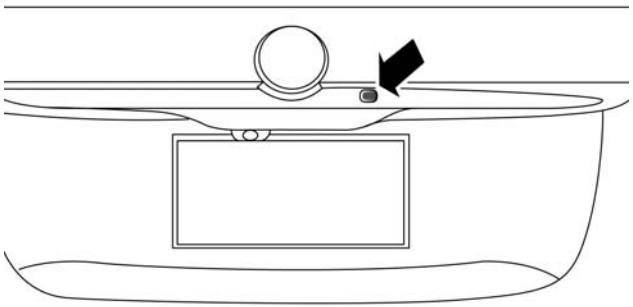

Liftgate Passive Entry Lock Button

Activation/Deactivation Of Keyless Enter-N-Go

Keyless Enter-N-Go can be activated or deactivated through the instrument cluster display or through the Uconnect system.

General Information

The following regulatory statement applies to all radio frequency (RF) devices equipped in this vehicle:

This device complies with Part 15 of the FCC Rules and with Industry Canada license-exempt RSS standard(s). Operation is subject to the following two conditions:

1. This device may not cause harmful interference, and
2. This device must accept any interference received, including interference that may cause undesired operation.

NOTE: Changes or modifications not expressly approved by the party responsible for compliance could void the user's authority to operate the equipment.

Child Locks

To provide a safer environment for small children riding in the rear seats, the rear doors are equipped with a Child-Protection Door Lock system.

To use the system, open each rear door, use a flat blade screwdriver (or ignition key) and rotate the dial to the lock or unlock position. When the system on a door is engaged, that door can only be opened by using the outside door handle even if the inside door lock is in the unlocked position.

Child-Protection Door Lock Location

NOTE:

- When the child lock system is engaged, the door can only be opened by using the outside door handle even though the inside door lock is in the unlocked position.
- After disengaging the Child-Protection Door Lock system, always test the door from the inside to make certain it is in the desired position.
- After engaging the Child-Protection Door Lock system, always test the door from the inside to make certain it is in the desired position.
- For emergency exit with the system engaged, rotate the lock button to the unlocked position, roll down the window, and open the door with the outside door handle.

WARNING!

Avoid trapping anyone in a vehicle in a collision. Remember that the rear doors can only be opened from the outside when the Child-Protection locks are engaged.

SEATS

Seats are a part of the Occupant Restraint System of the vehicle.

WARNING!

- **It is dangerous to ride in a cargo area, inside or outside of a vehicle. In a collision, people riding in these areas are more likely to be seriously injured or killed.**
- **Do not allow people to ride in any area of your vehicle that is not equipped with seats and seat belts. In a collision, people riding in these areas are more likely to be seriously injured or killed.**
- **Be sure everyone in your vehicle is in a seat and using a seat belt properly.**

Manual Adjustment Front Seats

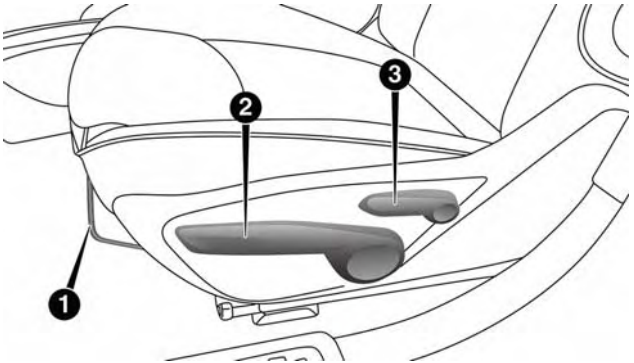

Manual Seat Adjustment Levers

1 — Forward/Rearward Adjustment Bar
2 — Seat Height Adjustment Lever
3 — Recline Lever

Manual Front Seat Forward/Rearward Adjustment

On models equipped with manual seats, the forward/rearward adjusting bar is located at the front of the seats, near the floor.

While sitting in the seat, lift up on the bar and move the seat forward or rearward. Release the bar once you have

reached the desired position. Then, using body pressure, move forward and rearward on the seat to be sure that the seat adjusters have latched.

WARNING!

- **Adjusting a seat while the vehicle is moving is dangerous. The sudden movement of the seat could cause you to lose control. The seat belt might not be adjusted properly and you could be injured. Adjust the seat only while the vehicle is parked.**
- **Do not ride with the seatback reclined so that the shoulder belt is no longer resting against your chest. In a collision you could slide under the seat belt and be seriously or even fatally injured. Use the recliner only when the vehicle is parked.**

Height Adjustment

The front driver and passenger seats height can be raised or lowered by using a lever, located on the outboard side of the seat. Pull upward on the lever to raise the seat height or push downward on the lever to lower the seat height.

Recline Adjustment

To adjust the seatback, lift the lever located on the outboard side of the seat, lean back to the desired position and release the lever. To return the seatback, lift the lever, lean forward and release the lever.

Power Adjustment Front Seats — If Equipped

The power seat controls are located on the outboard side of the seat, close to the floor.

Use the switch to move the seat up/down, forward/rearward, tilt if equipped and to set the angle of the seatback.

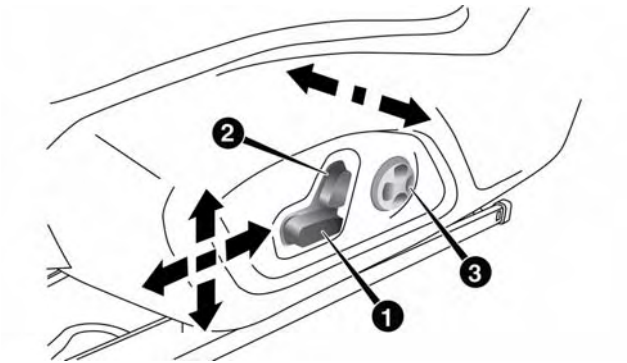

Power Seat Switches

1 — Power Seat Switch
2 — Power Recline Switch
3 — Power Lumbar Switch

Forward Or Rearward Adjustment

The seat can be adjusted both forward and rearward. Push the seat switch forward or rearward, the seat will move in the direction of the switch. Release the switch when the desired position has been reached.

Height Adjustment

The height of the seats can be adjusted up or down. Pull upward or push downward on the seat switch, the seat will move in the direction of the switch. Release the switch when the desired position is reached.

Recline Adjustment

Push the seat recliner switch forward or rearward, the seatback will move in the direction of the switch. Release the switch when the desired position has been reached.

Tilt Adjustment

The angle of the seat cushion can be adjusted up or down. Pull upward or push downward on the front of the seat switch, the front of the seat cushion will move in the direction of the switch.

Power Lumbar Adjustment

Push the switch forward or rearward to increase or decrease the lumbar support. Push the switch upward or downward to raise or lower the lumbar support.

Heated Seats — If Equipped

The heated seat switches are located on the instrument panel.

You can choose between two heating levels:

- Push the heated seat button once to turn the HI setting on.
- Push the heated seat button a second time to turn the LO setting on.
- Push the heated seat button a third time to turn the heating elements off.

If the HI-level setting is selected, the system will automatically switch to LO-level after approximately 145 minutes of continuous operation. At that time, the display will change from HI to LO, indicating the change. The LO-level setting will turn off automatically after approximately 60 minutes.

NOTE: The engine must be running for the heated seats to operate.

Vehicles Equipped With Remote Start

Vehicles equipped with Remote Start, the heated seats can be programmed to come on during a Remote Start until the ignition switch is cycled to the RUN position.

Auto On Comfort — If Equipped

If the external temperature is below 40 °F (5 °C) at each start-up of the vehicle the heated seat functionality of the driver's seat is turned on to HI-level.

WARNING!

- **Persons who are unable to feel pain to the skin because of advanced age, chronic illness, diabetes, spinal cord injury, medication, alcohol use, exhaustion or other physical condition must exercise care when using the seat heater. It may cause burns even at low temperatures, especially if used for long periods of time.**
- **Do not place anything on the seat or seatback that insulates against heat, such as a blanket or cushion. This may cause the seat heater to overheat. Sitting in a seat that has been overheated could cause serious burns due to the increased surface temperature of the seat.**

Rear Seats

The split rear seat increases the storage of the rear cargo area.

NOTE:

- Prior to folding the rear seat down, it may be necessary to position the front seat to its mid-track position. Be sure that the front seats are fully upright and positioned forward, this will allow the rear seat to fold down easily.
- You may experience deformation in the seat cushion from the seat belt buckles if the seats are left folded for an extended period of time. This is normal and by simply opening the seats to the open position, over time the seat cushion will return to its normal shape.

WARNING!

- **It is extremely dangerous to ride in a cargo area, inside or outside of a vehicle. In a collision, people riding in these areas are more likely to be seriously injured or killed.**
- **Do not allow people to ride in any area of your vehicle that is not equipped with seats and seat belts.**
- **Be sure everyone in your vehicle is in a seat and using a seat belt properly.**

Removing Shelf — If Equipped

Proceed as follows:

1. Disconnect the two links that support the shelf at the eyelets.

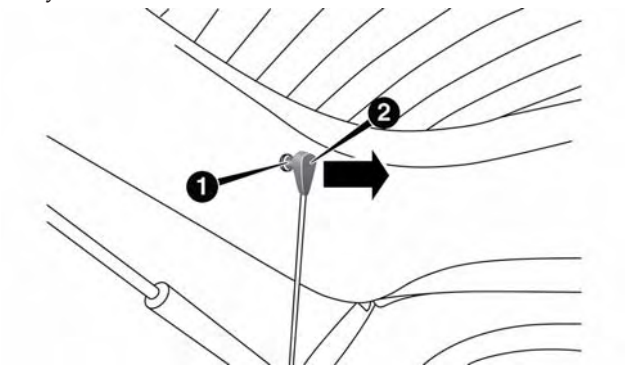

Rear Shelf Support Links

1 — Eyelets
2 — Links

2. Lift the rear part of the overhead luggage shelf.
3. Clear the pins placed outside of the shelf, and then remove the rear shelf pulling it upwards.
4. The rear shelf can be stored in the cargo area, or behind the front seatbacks.

Partial Enlargement Of Cargo Area

Enlargement of the left side of the cargo area allows you to carry a single passenger on the right side of the rear seat, while the enlargement of the right side allows you to carry two passengers.

Proceed as follows:

1. Remove the rear shelf (if equipped).
2. Fully lower the rear seat head restraints.
3. Move the safety belts to the outboard side of the seat and rest them on the seat belt guide.

4. Pull the seatback release lever to fold the left or right rear seatback completely forward.

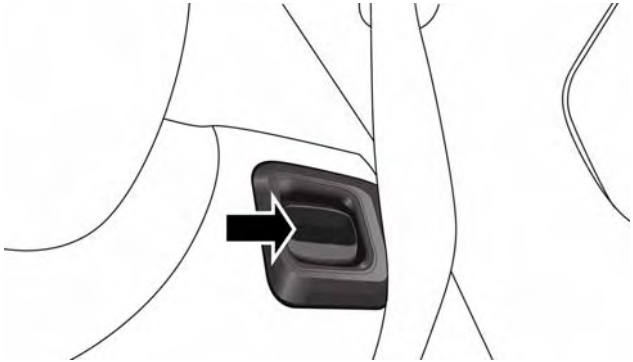

Seatback Release Lever

Cargo Area Enlargement

Folding both sides of the rear seat provides additional storage in the rear cargo area.

Proceed as follows:

1. Remove the rear shelf (if equipped).
2. Fully lower the rear seat head restraints.
3. Move the safety belts to the outboard side of the seat.
4. Pull the seatback release lever to fold both sides of the rear seatbacks completely forward.

Seatback Repositioning

NOTE: If interference from the cargo area prevents the seatback from fully locking, you will have difficulty returning the seat to its proper position.

1. Move the safety belts to the seat belt guides on the top edge of the seat to ensure the seatbacks properly latch.
2. Lift the seatbacks, pushing them back until they lock on both the latches. Verify the red notches are no longer visible on the release lever. If the red notches are visible, the seatback is not secure.

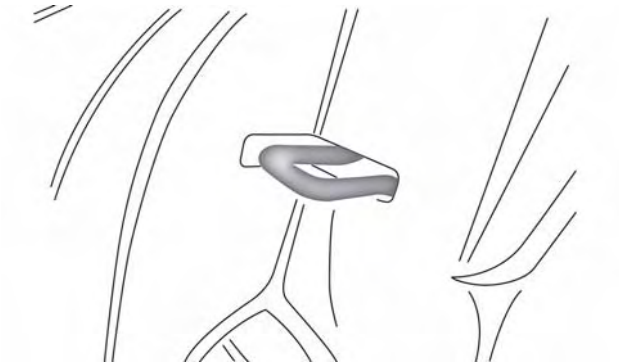

Rear Seat Latch

WARNING!

Be certain that the seatback is securely locked into position. If the seatback is not securely locked into position the seat will not provide the proper stability for child seats and/or passengers. An improperly latched seat could cause serious injury.

HEAD RESTRAINTS

Head restraints are designed to reduce the risk of injury by restricting head movement in the event of a rear impact. Head restraints should be adjusted so that the top of the head restraint is located above the top of your ear.

WARNING!

- **All occupants, including the driver, should not operate a vehicle or sit in a vehicle's seat until the head restraints are placed in their proper positions in order to minimize the risk of neck injury in the event of a crash.**
- **Head restraints should never be adjusted while the vehicle is in motion. Driving a vehicle with the head restraints improperly adjusted or removed could cause serious injury or death in the event of a collision.**

Front Head Restraints

Your vehicle is equipped with driver and passenger head restraints.

To raise the head restraint, pull upward on the head restraint. To lower the head restraint, push the adjustment button, located on the base of the head restraint, and push downward on the head restraint.

To remove the head restraint recline the backrest of the seat to avoid interference with the roof. Raise the head

restraint as far as it can go then push the release button and adjustment button at the base of each post while pulling the head restraint up. To reinstall the head restraint, put the head restraint posts into the holes and push downward. Then adjust it to the appropriate height.

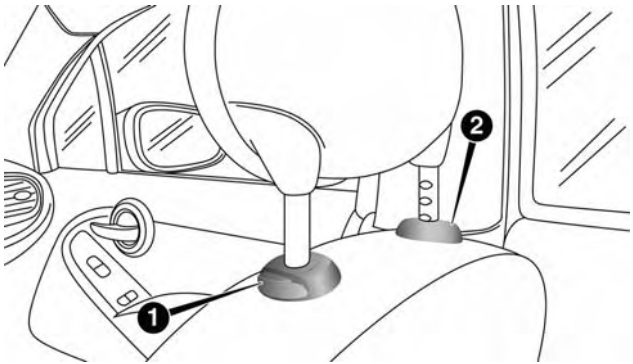

Front Head Restraint

1 — Adjustment Button
2 — Release Button

NOTE: Do not reposition the head restraint 180 degrees to the incorrect position in an attempt to gain additional clearance to the back of the head.

WARNING!

- **A loose head restraint thrown forward in a collision or hard stop could cause serious injury or death to occupants of the vehicle. Always securely stow removed head restraints in a location outside the occupant compartment.**
- **ALL the head restraints MUST be reinstalled in the vehicle to properly protect the occupants. Follow the re-installation instructions above prior to operating the vehicle or occupying a seat.**

Rear Head Restraints

Your vehicle is equipped with two outboard head restraints and one center head restraint for its rear passengers. The rear head restraints can be raised or lowered. When the center seat is being occupied, the head restraint should be in the raised position. When there are no occupants in the center seat, the head restraint can be lowered for maximum visibility for the driver.

To raise the head restraint, pull upward on the head restraint. To lower the head restraint, push the adjustment button, located at the base of the head restraint, and push downward on the head restraint.

To remove the head restraint, raise it as far as it can go then push the release button and adjustment button at the base of each post while pulling the head restraint up. To reinstall the head restraint, put the head restraint posts into the holes and push downward. Then adjust it to the appropriate height.

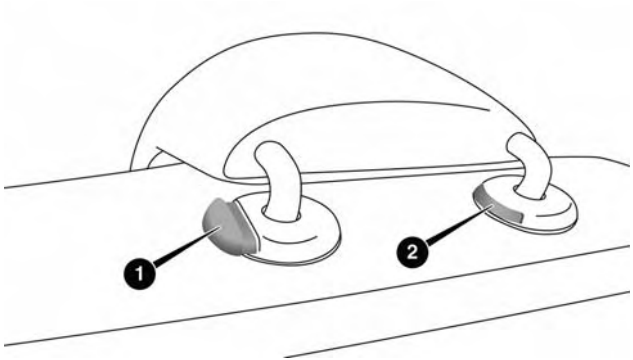

Rear Head Restraint

1 — Adjustment Button
2 — Release Button

NOTE: Do not reposition the head restraint 180 degrees to the incorrect position in an attempt to gain additional clearance to the back of the head.

WARNING!

- **A loose head restraint thrown forward in a collision or hard stop could cause serious injury or death to occupants of the vehicle. Always securely stow removed head restraints in a location outside the occupant compartment.**
- **ALL the head restraints MUST be reinstalled in the vehicle to properly protect the occupants. Follow the re-installation instructions above prior to operating the vehicle or occupying a seat.**

STEERING WHEEL

Tilt/Telescoping Steering Column

This feature allows you to tilt the steering column upward or downward. It also allows you to lengthen or shorten the steering column. The tilt/telescoping lever is located below the steering wheel at the end of the steering column.

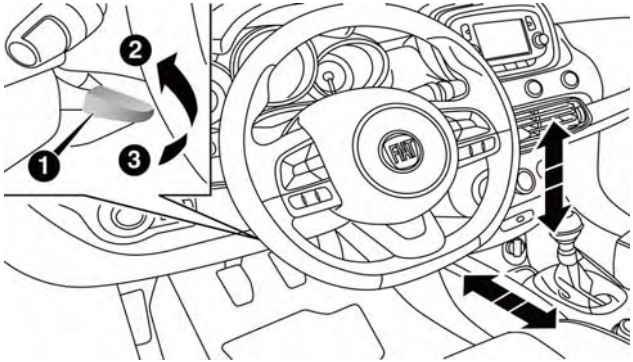

Tilt/Telescoping Steering Wheel

1 — Tilt/Telescoping Steering Wheel Lever
2 — Locked Position
3 — Unlocked Position

To unlock the steering column, push the tilt/telescoping lever downward (toward the floor). To tilt the steering column, move the steering wheel upward or downward as desired. To lengthen or shorten the steering column, pull the steering wheel outward or push it inward as desired.

To lock the steering column in position, pull the tilt/telescoping lever upward until fully engaged.

WARNING!

Do not adjust the steering column while driving. Adjusting the steering column while driving or driving with the steering column unlocked, could cause the driver to lose control of the vehicle. Failure to follow this warning may result in serious injury or death.

Heated Steering Wheel — If Equipped

The steering wheel contains a heating element that helps warm your hands in cold weather. The heated steering wheel has only one temperature setting. Once the heated steering wheel switch has been turned on, it will operate for an average of 80 minutes or more before automatically shutting off. This time may vary depending on the environmental temperature. The heated steering wheel can shut off early or may not turn on when the steering wheel is already warm. The heated steering wheel control button is located on the center of the instrument panel below the climate controls.

Auto On Comfort — If Equipped

If the external temperature is below 40 °F (5 °C) at each start-up of the vehicle the heated steering wheel functionality is turned on.

WARNING!

- **Persons who are unable to feel pain to the skin because of advanced age, chronic illness, diabetes, spinal cord injury, medication, alcohol use, exhaustion, or other physical conditions must exercise care when using the steering wheel heater. It may cause burns even at low temperatures, especially if used for long periods.**
- **Do not place anything on the steering wheel that insulates against heat, such as a blanket or steering wheel covers of any type and material. This may cause the steering wheel heater to overheat.**

MIRRORS

Inside Day/Night Mirror

The mirror can be adjusted up, down, left, and right. The mirror should be adjusted to center on the view through the rear window. Headlight glare from vehicles behind you can be reduced by moving the lever under the mirror to the night position (toward the rear of the vehicle). The mirror should be adjusted while the lever under the mirror is set in the day position (toward the windshield).

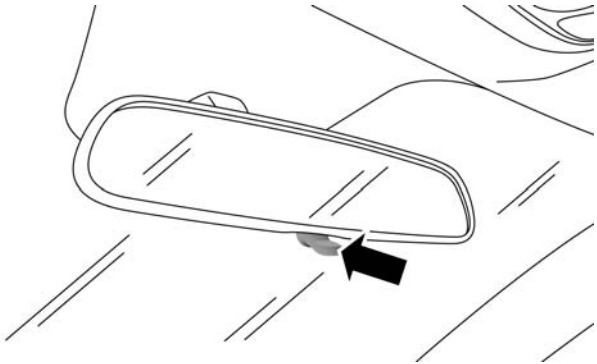

Mirror Lever

NOTE: The mirror will automatically release in the event of heavy contact with a passenger.

Auto Dimming Mirror — If Equipped

This mirror automatically adjusts for headlight glare from vehicles behind you. You can turn the feature on or off by pushing the button at the base of the mirror. A light to the left of the button will illuminate to indicate

when the dimming feature is activated. The sensor to the right of the button does not illuminate.

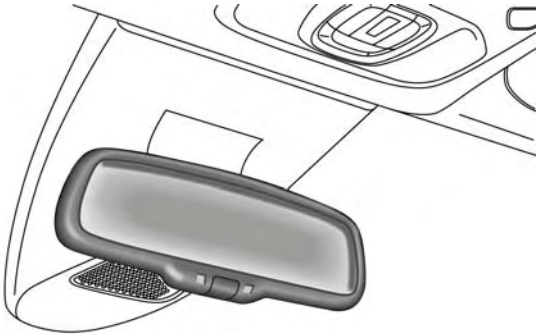

Dimming Mirror

NOTE: This feature is disabled when the vehicle is moving in reverse.

Outside Mirrors

Power Adjustment Mirrors

The power mirror switch is located on the driver's door panel.

To adjust the mirror, push the mirror adjustment switch in the four directions indicated by arrows.

NOTE:

- To adjust the power mirrors, the ignition must be in RUN mode.
- Once the mirror is adjusted, rotate the control to the neutral position to avoid accidental movements.

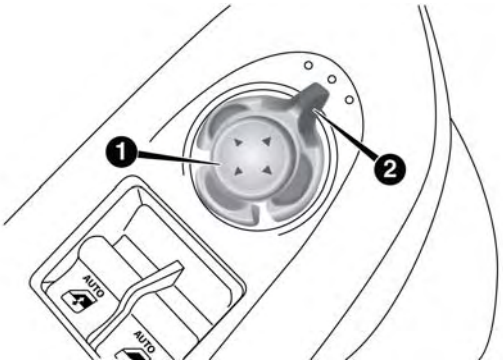

Power Mirror Switch

1 — Mirror Adjustment Switch
2 — Mirror Selector Switch

Folding Mirror

The exterior mirrors are hinged to allow the mirror to pivot forward or rearward to help avoid damage. The mirror has three detent positions: full forward, normal and full rearward.

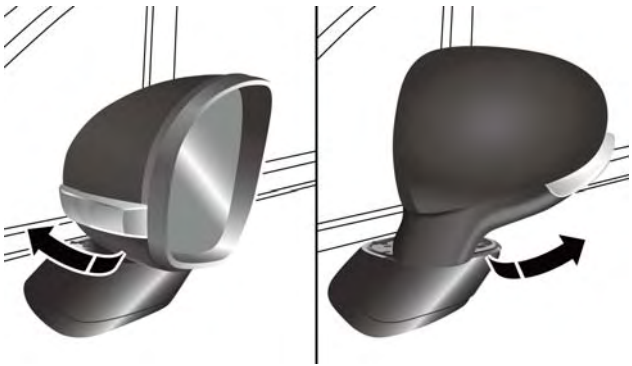

Folding Exterior Mirror

Heated Mirrors — If Equipped

These mirrors are heated to melt frost or ice. This feature can be activated whenever you turn on the Rear Window Defroster.

BLIND SPOT MONITORING (BSM) — IF EQUIPPED

The Blind Spot Monitoring (BSM) system uses two radar-based sensors, located inside the rear bumper fascia, to detect highway licensable vehicles (automobiles, trucks, motorcycles, etc.) that enter the blind spot zones from the rear/front/side of the vehicle.

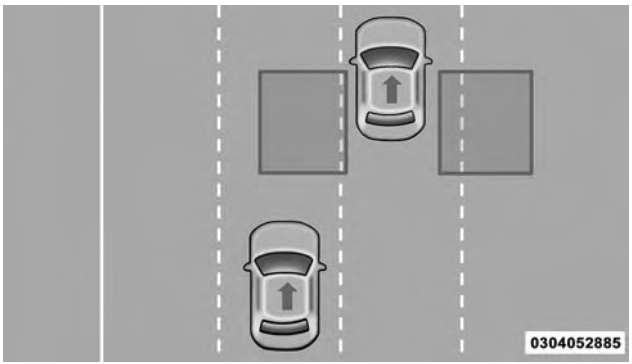

Rear Detection Zones

When the vehicle is started, the BSM warning light will momentarily illuminate in both outside rear view mirrors to let the driver know that the system is operational. The BSM system sensors operate when the

vehicle is in any forward gear or REVERSE and enters stand-by mode when the vehicle is in PARK.

The BSM detection zone covers approximately one lane width on both sides of the vehicle, 10 ft (3 m). The zone length starts at the outside mirror and extends approximately 20 ft (6 m) beyond the rear bumper of the vehicle. The BSM system monitors the detection zones on both sides of the vehicle when the vehicle speed reaches approximately 6 mph (10 km/h) or higher and will alert the driver of vehicles in these areas.

NOTE:

- The BSM system does NOT alert the driver about rapidly approaching vehicles that are outside the detection zones.
- If a trailer is connected to the vehicle, it is necessary to deactivate BSM system manually by settings menu to avoid a miss-detection. Refer to "Uconnect Settings" in "Multimedia" for further information.

The area on the rear fascia where the radar sensors are located must remain free of snow, ice, and dirt/road contamination so that the BSM system can function properly. Do not block the radar sensors located on the rear fascia with foreign objects (bumper stickers, bicycle racks, etc.).

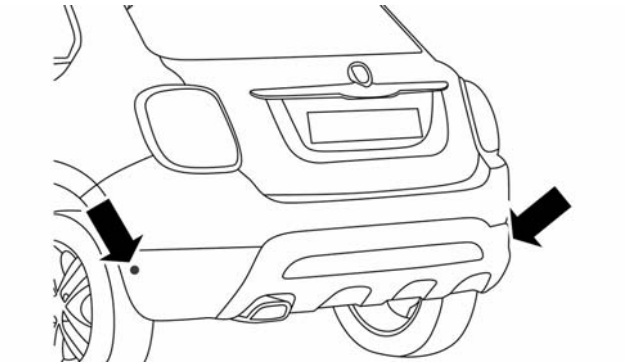

Rear Sensor Locations

The BSM system notifies the driver of objects in the detection zones by illuminating the BSM warning light located in the outside mirrors in addition to sounding an audible (chime) alert and reducing the radio volume. Refer to "Modes Of Operation" in this section for further information.

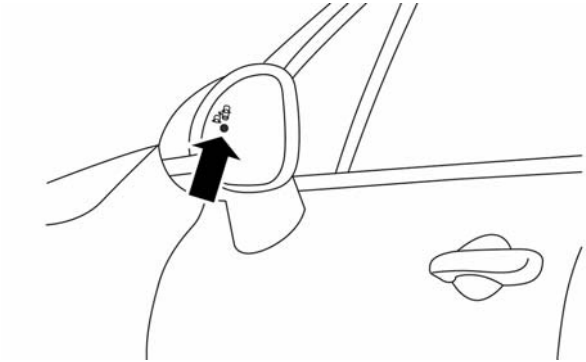

BSM Warning Light

The BSM system monitors the detection zone from three different entry points (side, rear, front) while driving to see if an alert is necessary. The BSM system will issue an alert during these types of zone entries.

Entering From The Side

Vehicles that move into your adjacent lanes from either side of the vehicle.

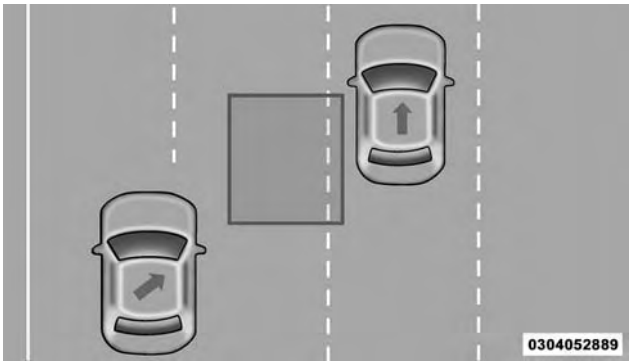

Side Monitoring

Entering From The Rear

Vehicles that come up from behind your vehicle on either side and enter the rear detection zone with a relative speed of less than 31 mph (50 km/h).

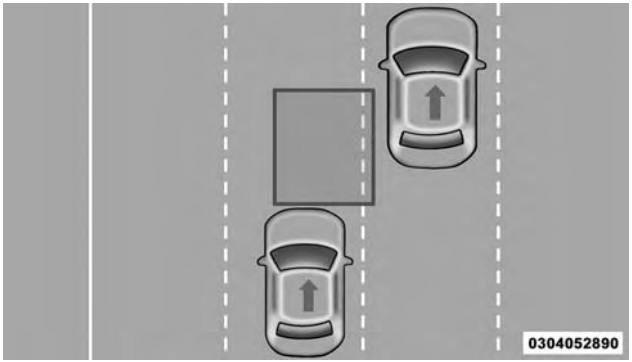

Rear Monitoring

Overtaking Traffic

If you pass another vehicle slowly with a relative speed less than 15 mph (25 km/h) and the vehicle remains in the blind spot for approximately 1.5 seconds, the warning light will be illuminated. If the difference in speed between the two vehicles is greater than 15 mph (25 km/h), the warning light will not illuminate.

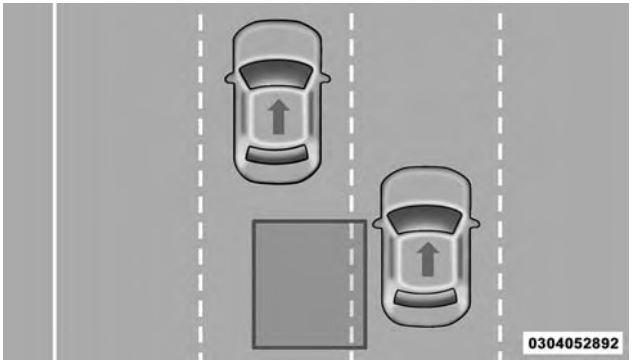

Overtaking/Approaching

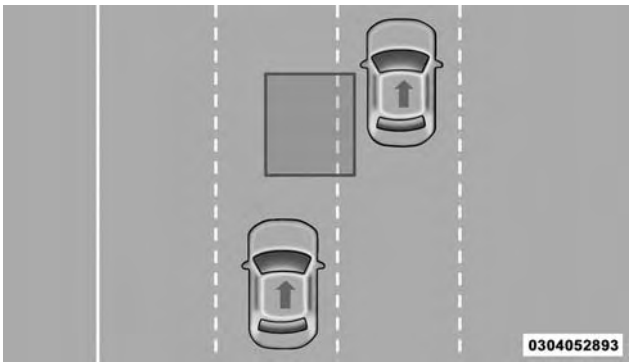

Overtaking/Passing

The BSM system is designed not to issue an alert on stationary objects such as guardrails, posts, walls, foliage, berms, etc. However, occasionally the system may alert on such objects. This is normal operation and your vehicle does not require service.

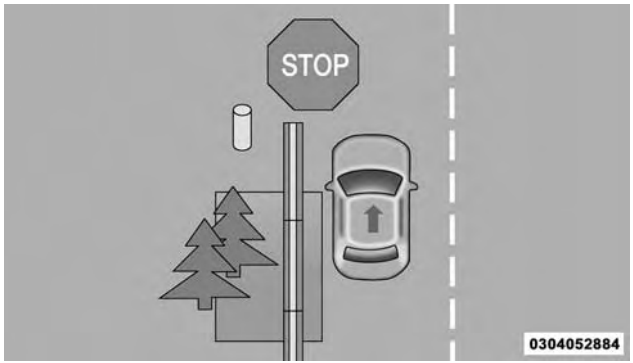

Stationary Objects

The BSM system will not alert you of objects that are traveling in the opposite direction of the vehicle in adjacent lanes.

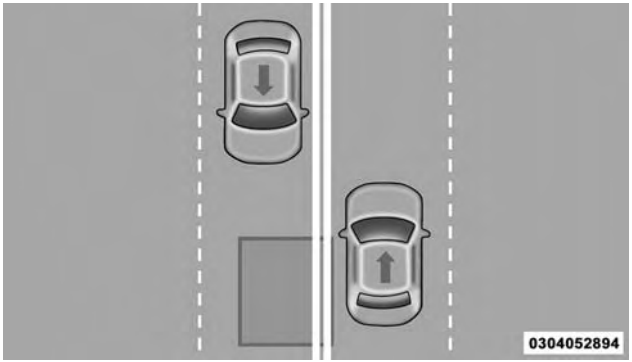

Opposing Traffic

WARNING!

The Blind Spot Monitoring system is only an aid to help detect objects in the blind spot zones. The BSM system is not designed to detect pedestrians, bicyclists, or animals. Even if your vehicle is equipped with the BSM system, always check your vehicles mirrors, glance over your shoulder, and use your turn signal before changing lanes. Failure to do so can result in serious injury or death.

Rear Cross Path (RCP)

The Rear Cross Path (RCP) feature is intended to aid the driver when backing out of parking spaces where their vision of oncoming vehicles may be blocked. Proceed slowly and cautiously out of the parking space until the rear end of the vehicle is exposed. The RCP system will then have a clear view of the cross traffic and if an oncoming vehicle is detected, alert the driver.

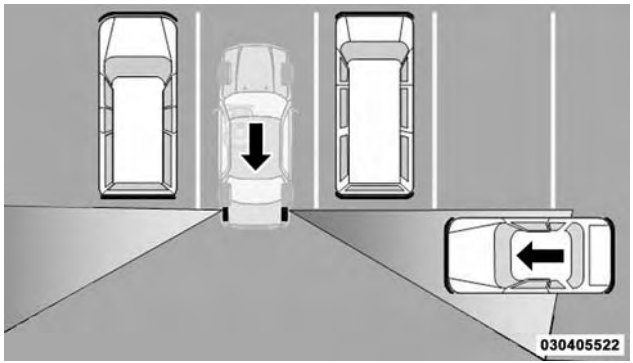

RCP Detection Zones

RCP monitors the rear detection zones on both sides of the vehicle, for objects that are moving toward the side of the vehicle with a minimum speed of approximately 1 mph (2 km/h), to objects moving a maximum of approximately 22 mph (35 km/h), such as in parking lot situations.

NOTE: In a parking lot situation, oncoming vehicles can be obscured by vehicles parked on either side. If the sensors are blocked by other structures or vehicles, the system will not be able to alert the driver.

When RCP is on and the vehicle is in REVERSE, the driver is alerted using both the visual and audible alarms, including reducing the radio volume.

WARNING!

RCP is not a back up aid system. It is intended to be used to help a driver detect an oncoming vehicle in a parking lot situation. Drivers must be careful when backing up, even when using RCP. Always check carefully behind your vehicle, look behind you, and be sure to check for pedestrians, animals, other vehicles, obstructions, and blind spots before backing up. Failure to do so can result in serious injury or death.

Mode Of Operation

Three selectable modes of operation are available in the Uconnect System. Refer to "Uconnect Settings" in "Multimedia" for further information.

Blind Spot Alert Lights Only

When operating in Blind Spot Alert mode, the BSM system will provide a visual alert in the appropriate side view mirror based on a detected object. However, when the system is operating in Rear Cross Path (RCP) mode, the system will respond with both visual and audible alerts when a detected object is present. Whenever an audible alert is requested, the radio is muted.

Blind Spot Alert Lights/Chime

When operating in Blind Spot Alert Lights/Chime mode, the BSM system will provide a visual alert in the appropriate side view mirror based on a detected object. If the turn signal is then activated, and it corresponds to an alert present on that side of the vehicle, an audible chime will also be sounded. Whenever a turn signal and detected object are present on the same side at the same time, both the visual and audible alerts will be issued. In addition to the audible alert, the radio (if on) will also be muted.

NOTE: Whenever an audible alert is requested by the BSM system, the radio is also muted.

When the system is in RCP, the system will respond with both visual and audible alerts when a detected object is present. Whenever an audible alert is requested, the radio is also muted. Turn/hazard signal status is ignored; the RCP state always requests the chime.

Blind Spot Alert Off

When the BSM system is turned off, there will be no visual or audible alerts from either the BSM or RCP systems.

NOTE: The BSM system will store the current operating mode when the vehicle is shut off. Each time the vehicle is started the previously stored mode will be recalled and used.

Blind Spot Monitoring Fault Warnings

Sensor Blinded

In the case of a sensor blinded:

- BSM Mirror Warning Lights are turned on continuously.
- A instrument cluster message will display **"Blind Spot Monitoring Unavailable - Wipe Rear Bumper Corners."**

NOTE: The rear bumper must be clean and free of any obstructing debris.

System Not Available

In the case of the system being temporary unavailable:

- BSM Mirror Warning Lights are turned on continuously.
- A instrument cluster message will display **"Blind Spot Monitoring Temporary Unavailable."**

In the case of the system being completely unavailable:

- A chime will turn on.
- A instrument cluster message will display **"Blind Spot Monitoring Unavailable - Service Required."**

NOTE: Vehicle must be taken to the nearest authorized dealer for service.

General Information

This vehicle has systems that operate on radio frequency that comply with Part 15 of the Federal Communications Commission (FCC) rules and with Industry Canada Standards RSS- GEN/210/220/310.

Operation is subject to the following two conditions:

1. The device may not cause harmful interference.
2. The device must accept any interference received, including interference that may cause undesired operation of the device.

Changes or modifications to any of these systems by other than an authorized service facility could void authorization to use this equipment.

EXTERIOR LIGHTS

Headlights

The headlight switch is located on the left side of the instrument panel. The headlight switch controls the

operation of the headlights, side marker lights, daytime running lights, fog lights and the dimming of the instrument cluster and interior lighting.

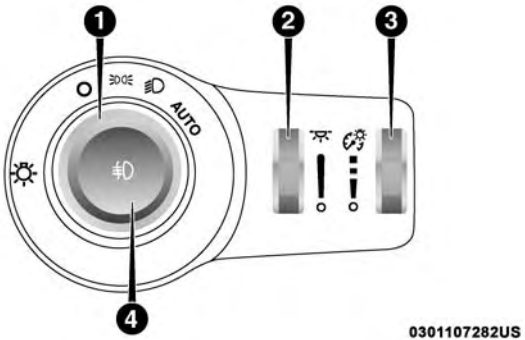

Headlight Switch

1 — Rotate Headlight Switch
2 — Ambient Light Dimmer
3 — Instrument Panel Dimmer
4 — Push Fog Light Switch

Turning on the headlights will illuminate the instrument cluster and the controls located on the instrument panel.

Automatic Lighting — If Equipped

Light Sensor

The light sensor is equipped with an infrared LED, located on the windshield. It detects changes in light intensity outside the vehicle, based on the sensitivity of light set by using the Menu on the display or on the Uconnect system.

The higher the sensitivity, the lesser the amount of external light required for controlling the lighting.

Automatic Headlights

Turn the headlight switch to the AUTO position.

When the automatic headlights are enabled, the headlight time delay is active. After the ignition switch is placed in the STOP mode, the headlights will automatically turn off after approximately 90 seconds depending on the settings of the feature.

The timing of the headlights is adjustable between 0, 30, 60 and 90 seconds. Refer to “Uconnect Settings” in “Multimedia” for further information.

NOTE: The engine must be running before the headlights will come on in the automatic mode.

Daytime Running Lights (DRL) — If Equipped

The Daytime Running Lights (DRLs) will turn on when the engine is started and remain on unless the headlights are turned on or the engine is shut off.

The DRLs will be disabled during turn signal operation and resume operation when the turn signal operation has ended.

Front Fog Lights — If Equipped

The front fog light switch is built into the headlight switch.

To activate the front fog lights, turn on the parking lights or the low beam headlights and push the headlight switch. To turn off the front fog lights, push the headlight switch a second time or turn off the headlight switch.

An indicator light in the instrument cluster illuminates when the fog lights are turned on.

NOTE:

- The fog lights will operate with the low beam headlights or parking lights on. Selecting the high beam headlights will turn off the fog lights.
- The fog lights also function as cornering lights. Therefore there will be times when only one light is on.

Parking Lights

Rotate the headlight switch to the first position to turn on the parking lights. The parking light indicator in the cluster will illuminate.

Headlight Delay

This feature provides the safety of headlight illumination for up to 90 seconds when leaving your vehicle in an unlit area.

The time delay of the headlights is programmable between 0, 30, 60 and 90 seconds. Refer to “Uconnect Settings” in “Multimedia” for further information.

Headlight Delay Activation

To activate the delay feature, place the ignition in the STOP position while the headlights are still on. Then,

turn off the headlights within two minutes. The delay interval begins when the headlight switch is turned off.

Headlight Delay Disable

The feature is disabled by turning on the headlights, the parking lights or by placing the ignition in RUN mode.

If you shut off the lights before the ignition is turned on, they will turn off in the normal manner.

NOTE: The lights must be turned off within two minutes of placing the ignition in STOP mode to activate this feature.

High Beams

To turn on the high beam headlights, push the turn signal lever forward (toward the front of the vehicle) and an indicator will illuminate in the cluster. To turn off the high beams, pull the turn signal lever rearward (toward the rear of the vehicle).

High Beam And Turn Signal Controls

NOTE: The headlights must be on for the high beams to activate.

Turn Signals

Move the multifunction lever up or down and the arrows on each side of the instrument cluster flash to show proper operation of the front and rear turn signal lights.

When the Daytime Running Lights are on and a turn signal is activated, the Daytime Running Lamp will turn off on the side of the vehicle in which the turn signal is flashing. The Daytime Running Lamp will turn back on when the turn signal is turned off.

INTERIOR LIGHTS

Front Courtesy Light

The courtesy lights will automatically turn on when the door is open or closed. The light switches in the overhead console are for reading lamps.

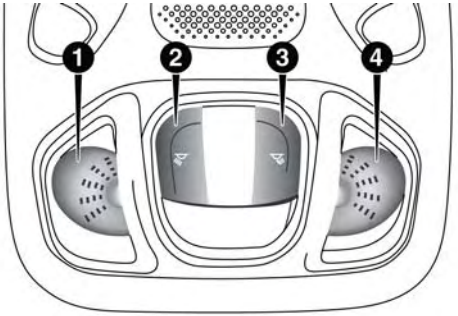

Front Courtesy/Reading Lights

1 — Left Courtesy/Reading Light
2 — Left Light Switch
3 — Right Light Switch
4 — Right Courtesy/Reading Light

Push the driver or passenger light switch to operate the reading lamps individually.

NOTE:

- Before exiting the vehicle, make sure that the interior lights are turned off. This will prevent the battery from discharging once the doors are closed.
- If a light is left on it will automatically be turned off after approximately 15 minutes after the ignition is in STOP mode.

Dome Light Timing

The Dome Light will automatically illuminate when the doors are unlocked, the doors are opened or after the doors are closed.

Timing Entering The Vehicle

The dome lights illuminate in the following ways:

- When the doors are unlocked, the dome light will illuminate for approximately 27 seconds.
- When one of the doors is opened, the dome light will illuminate for approximately three minutes.
- When the doors are closed, the dome light will automatically shut off after approximately 27 seconds.

NOTE: The timing stops once the ignition is placed in the RUN or START mode.

The dome light will turn off under any of the following conditions:

- The dome light is disabled when the ignition is placed in the RUN or START mode.
- The dome lights will turn off automatically when the doors are locked.
- The dome lights will automatically turn off after approximately fifteen minutes of inactivity to preserve the battery.

Timing Exiting The Vehicle

The dome light will illuminate under the following conditions when the ignition is turned to the STOP mode:

- The dome light will illuminate for 27 seconds after the key is removed from the vehicle.
- The opening of one of the doors (approximately three minutes).
- After closing a door (approximately 27 seconds).

The dome light timing is disabled when the doors are locked.

Illuminated Vanity Mirrors — If Equipped

An illuminated vanity mirror is located on each sun visor. To use the mirror, rotate the sun visor down and swing the mirror cover upward. The lights will turn on automatically. Closing the mirror cover will turn the light off.

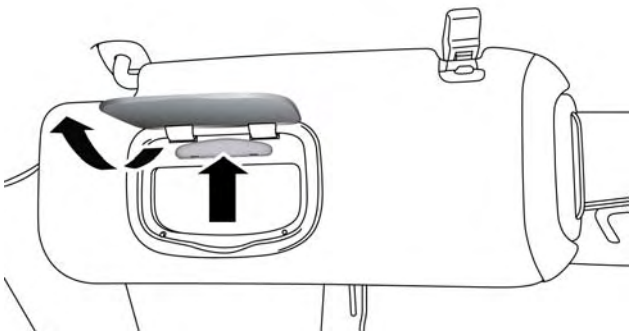

Vanity Mirror Light

Lower Glove Compartment Light

An interior light is located is the lower glove compartment.

This light automatically turn on/off when the glove compartment is opened and closed, regardless of the position of the ignition.

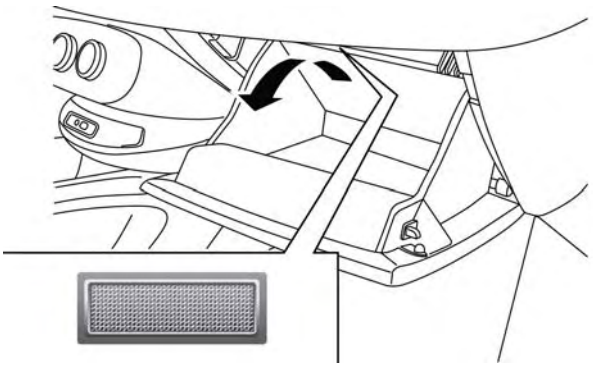

Lower Glove Compartment Light

NOTE: In order to preserve the life of the battery, the light will turn off after 15 minutes.

Rear Dome Light — If Equipped

Push the switch on the rear dome light once to turn the light on, the light will remain on at all times. Push the switch a second time to turn the light off, the lights will remain off until a door is opened.

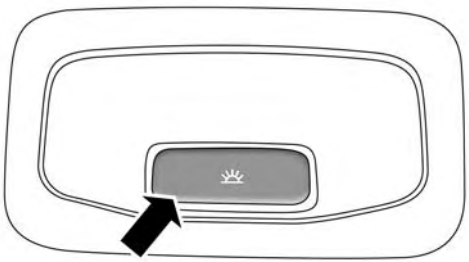

0322105597US

Rear Dome Light On/Off Switch

Vehicles With Retractable Roof

For vehicles equipped with a retractable roof, there are two interior lights located below the grab handles of the rear doors.

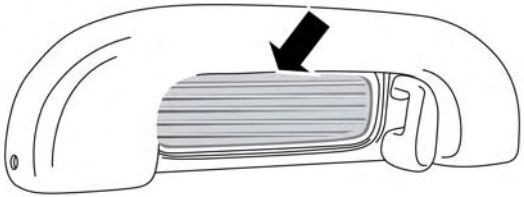

Rear Interior Light

The lights come on by opening any of the doors.

Cargo Area Lights

An interior light is located on the left side panel in the cargo area.

This light automatically turn on/off when the liftgate is opened and closed, regardless of the position of the ignition.

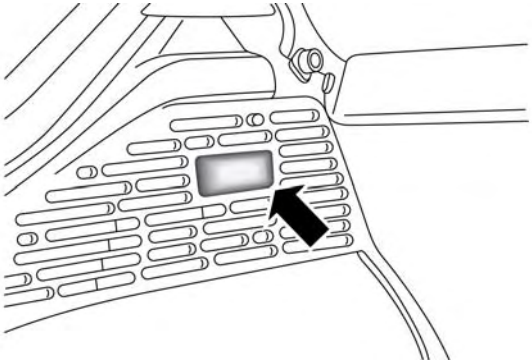

Cargo Light

NOTE: In order to preserve the life of the battery, the light will turn off after 15 minutes.

Instrument Panel Dimmer And Ambient Light Control

Rotate the ambient dimmer control upward or downward to increase or decrease the brightness of the ambient light located in the overhead console, door handle lights, lower instrument panel lights, door map pocket lights, and cubby bin lights.

With the parking lights or headlights on, rotate the instrument panel dimmer control upward or downward to increase or decrease the brightness of the instrument panel. At the top detent of the instrument panel dimmer, all the interior lights will also illuminate. At the bottom most setting of the thumb wheel will turn all the interior lights to their lowest dimmable setting.

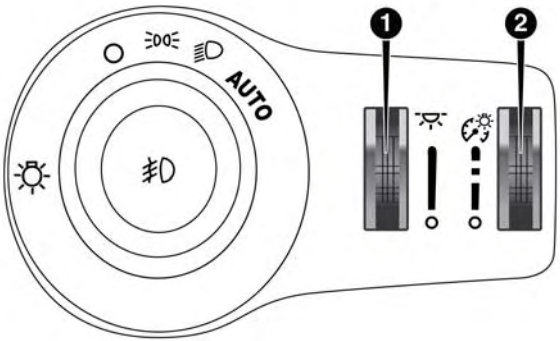

Headlight Switch

1 — Ambient Light Control — If Equipped
2 — Instrument Panel Dimmer

WIPERS AND WASHERS

Front Wiper Operation

The windshield wiper/washer controls are located on the lever on the right side of the steering column. The front wipers are operated by rotating a switch, located on the end of the lever.

Windshield Wiper Stalk

CAUTION!

Always remove any buildup of snow that prevents the windshield wiper blades from returning to the "park" position. If the windshield wiper switch is turned off, and the blades cannot return to the "park" position, damage to the wiper motor may occur.

Windshield Wiper Operation

Rotate the windshield wiper knob to one of the two detent positions for intermittent settings, the third detent for low wiper operation and the fourth for high wiper operation.

Windshield Washer Operation

To use the washer, pull the lever toward you and hold while spray is desired. If the lever is pulled while in the intermittent setting, the wipers will turn on and operate for several wipe cycles after the lever is released, and then resume the intermittent interval previously selected.

If the lever is pulled while the wipers are in the off position, the wipers will operate for several wipe cycles, then turn off.

WARNING!

Sudden loss of visibility through the windshield could lead to a collision. You might not see other vehicles or other obstacles. To avoid sudden icing of the windshield during freezing weather, warm the windshield with the defroster before and during windshield washer use.

Mist

Use this feature when weather conditions make occasional usage of the wipers necessary. Push the lever upward to the MIST position and release for a single wiping cycle.

NOTE: The mist feature does not activate the washer pump; therefore, no washer fluid will be sprayed on the windshield. The wash function must be used in order to spray the windshield with washer fluid.

Rain Sensor — If Equipped

This feature senses moisture on the windshield and automatically activates the wipers for the driver. The feature is especially useful for road splash or overspray from the windshield washers of the vehicle ahead. Rotate the end of the multifunction lever to one of two settings to activate this feature.

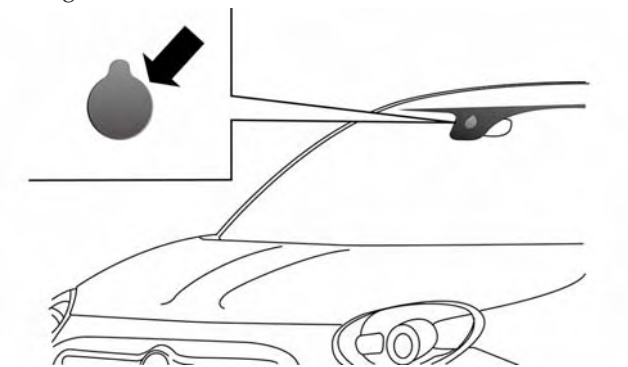

Rain Sensor Location

The sensitivity of the system can be adjusted with the multifunction lever. Wiper delay position one is the least sensitive, and wiper delay position two is the most sensitive. Setting one should be used for normal rain conditions, and can be used if the driver desires less

wiper sensitivity. Setting two can be used if the driver desires more sensitivity. Place the wiper switch in the off (O) position when not using the system.

NOTE:

- The Rain Sensing feature will not operate when the wiper switch is in the low or high-speed position.
- The Rain Sensing feature may not function properly when ice, or dried salt water is present on the windshield.
- Use of Rain-X or products containing wax or silicone may reduce Rain Sensing performance.
- The Rain Sensing feature can be turned on and off using the Uconnect System, refer to "Uconnect Settings" in "Multimedia" for further information.

The Rain Sensing system has protection features for the wiper blades and arms, and will not operate under the following conditions:

- **Low Ambient Temperature** — When the ignition is first turned to RUN, the Rain Sensing system will not operate until the wiper switch is moved, vehicle speed is greater than 0 mph (0 km/h), or the outside temperature is greater than 32°F (0°C).
- **Transmission In NEUTRAL Position** — When the ignition is in RUN mode, and the automatic transmission is in the NEUTRAL position, the Rain Sensing system will not operate until the wiper switch is moved, vehicle speed is greater than 5 mph (8 km/h), or the gear selector is moved out of the NEUTRAL position.

Remote Start Mode Inhibit — On vehicles equipped with Remote Starting system, Rain Sensing wipers are not operational when the vehicle is in the remote start mode. Once the operator is in the vehicle and has placed the ignition switch in RUN mode, rain sensing wiper operation can resume, if it has been selected, and no other inhibit conditions (mentioned previously) exist.

Rear Window Wiper/Washer

The rear wiper/washer controls are located on the lever on the right side of the steering column. The rear wiper/washer is operated by rotating a switch, located at the middle of the lever.

Rotate the center portion of the lever upward to the first detent for intermittent operation and to the second detent for continuous rear wiper operation.

To use the washer, push the lever forward and hold while spray is desired. If the lever is pushed while in the intermittent setting, the wiper will turn on and operate for several wipe cycles after the end of the lever is released, and then resume the intermittent interval previously selected.

NOTE:

- As a protective measure, the pump will stop if the switch is held for more than 30 seconds. Once the lever is released, the pump will resume normal operation.
- When front wipers are continuous and the vehicle is shifted in REVERSE, the rear wiper will perform one round up to clean the rear window.

If the lever is pushed while the wiper is in the off position, the wiper will operate for several wipe cycles, then turn off.

If the rear wiper is operating when the ignition is turned to the STOP mode, the wiper will automatically return to the “park” position.

Rear Window Defroster

The rear window defroster button is located with the Climate Controls on the instrument panel. Push this button to turn on the rear window defroster. An indicator in the button will illuminate when the rear window defroster is on. The rear window defroster automatically turns off after approximately 20

minutes. To manually shut the defroster off, push the button a second time.

CAUTION!

Failure to follow these cautions can cause damage to the heating elements:

- **Use care when washing the inside of the rear window. Do not use abrasive window cleaners on the interior surface of the window. Use a soft cloth and a mild washing solution, wiping parallel to the heating elements. Labels can be peeled off after soaking with warm water.**
- **Do not use scrapers, sharp instruments, or abrasive window cleaners on the interior surface of the window.**
- **Keep all objects a safe distance from the window.**

Windshield Wiper De-Icer — If Equipped

Your vehicle may be equipped with a Windshield Wiper De-Icer feature that may be activated under the following conditions:

- **Activation By Front Defrost** — The Windshield Wiper De-Icer will be activated automatically in the case of a cold weather manual start with full front defrost, and the ambient temperature is below 40° F (4.4° C).
- **Activation By Rear Defrost** — The Windshield Wiper De-Icer will be activated automatically when the rear defrost is turned on and the ambient temperature is below 40° F (4.4° C).
- **Activation By Remote Start Operation** — When Remote Start is active and the outside ambient temperature is less than 40° F (4.4° C), the Windshield Wiper De-Icer will be enabled. Upon exiting remote start mode the Windshield Wiper De-Icer will remain on.

CLIMATE CONTROLS

Air Outlet And Diffuser Locations — Passenger Compartment

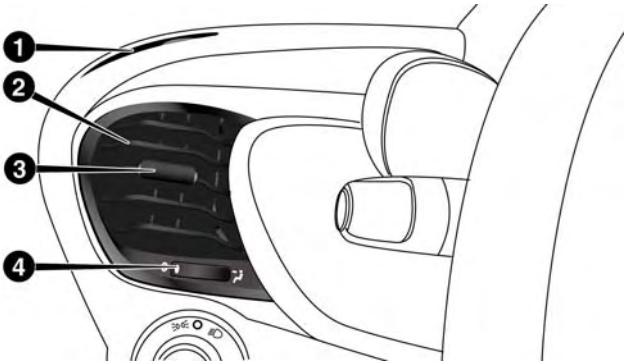

Left Side Air Outlets

1 — Fixed Air Outlet
2 — Adjustable Air Outlet
3 — Air Vane Adjustment
4 — Air Flow Outlet Adjustment

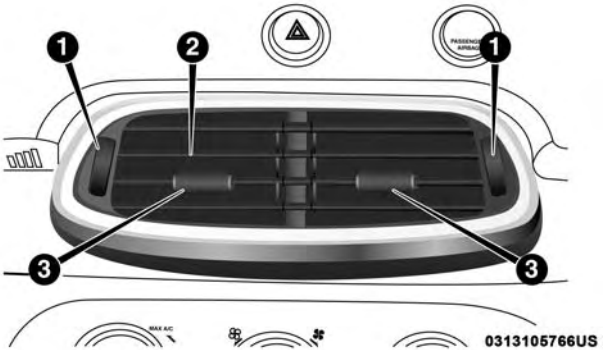

Center Air Outlets

1 — Air Flow Outlet Adjustment
2 — Adjustable Air Outlet
3 — Air Vane Adjustment

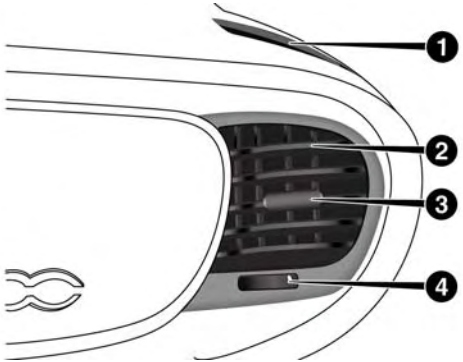

Right Side Air Outlets

1 — Fixed Air Outlet
2 — Adjustable Air Outlet
3 — Air Vane Adjustment
4 — Air Flow Outlet Adjustment

Manual Climate Controls Overview

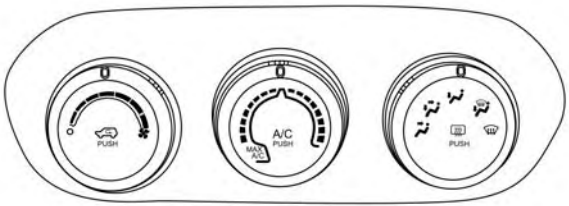

0313101282NA

Manual Climate Controls

Manual Climate Control Descriptions

Icon	Description
MAX A/C	**MAX A/C Setting** MAX A/C sets the system for maximum cooling performance. Rotate the temperature control adjust knob counterclockwise to the MAX A/C setting. In MAX A/C, the blower speed and mode position can be adjusted to desired user settings.
A/C	**A/C Button** Push this button to engage the Air Conditioning. A light will illuminate when the Air Conditioning system is engaged.
	Recirculation Button Push this control button to change the system between recirculation mode and outside air mode. Recirculation can be used when outside conditions such as smoke, odors, dust, or high humidity are present. **NOTE:** • Continuous use of the Recirculation mode may make the inside air stuffy and window fogging may occur. Extended use of this mode is not recommended. • The use of the Recirculation mode in cold or damp weather could cause windows to fog on the inside, because of moisture buildup inside the vehicle. Select the outside air position for maximum defogging. • Recirculation can be used in all modes except for Defrost. • The A/C can be deselected manually without disturbing the mode control selection.

Icon	Description
	Front Defrost Mode Air is directed through the windshield and side window demister outlets. Use this mode with maximum blower and temperature settings for best windshield and side window defrosting. **NOTE:** The air conditioning compressor operates in Mix or Defrost, even if the Air Conditioning (A/C) button is not pushed. This dehumidifies the air to help dry the windshield. To improve fuel economy, use these modes only when required.
	Rear Defrost Button Push and release the Rear Defrost Control button to turn on the rear window defroster and the heated outside mirrors (if equipped). An indicator will illuminate when the rear window defroster is on. The rear window defroster automatically turns off after 20 minutes.
	Temperature Control Rotate this control to regulate the temperature of the air inside the passenger compartment. Rotating the dial counterclockwise into the blue area of the scale indicates cooler temperatures, while rotating clockwise into the red area indicates warmer temperatures. Rotating the Temperature Control all the way counterclockwise results in turning on the MAX A/C feature.
	Blower Control Rotate this control to regulate the amount of air forced through the ventilation system in any mode. The blower speed increases as you move the control clockwise from the “0” (OFF) position.

Icon	Description
Panel Mode	**Panel Mode** Air is directed through the outlets in the instrument panel. These outlets can be adjusted to direct airflow. The center instrument panel outlets can be adjusted so that they are directed toward the rear seat passengers for maximum airflow to the rear.
Bi-Level Mode	**Bi-Level Mode** Air comes from the instrument panel outlets and floor outlets. A slight amount of air is directed through the defrost and side window demister outlets.
Floor Mode	**Floor Mode** Air is directed through the floor outlets with a small amount flowing through the defrost and side window demister outlets.
Mix Mode	**Mix Mode** Air is directed through the floor, defrost, and side window demister outlets. This setting works best in cold or snowy conditions that require extra heat to the windshield. This setting is good for maintaining comfort while reducing moisture on the windshield.

CAUTION!

Failure to follow these cautions can cause damage to the heating elements:

- **Use care when washing the inside of the rear window. Do not use abrasive window cleaners on the interior surface of the window. Use a soft cloth and a mild washing solution, wiping parallel to the heating elements. Labels can be peeled off after soaking with warm water.**
- **Do not use scrapers, sharp instruments, or abrasive window cleaners on the interior surface of the window.**
- **Keep all objects a safe distance from the window.**

Rear Window Defrosting

Push and release the rear window defrost button to turn the function on/off.

Activation of this function is indicated by the rear defrost indicator light on the instrument panel turning on. The function is automatically deactivated after 20 minutes.

If equipped, push the rear defrost button to activate the defrosting of door mirrors and heated rear window.

CAUTION!

To avoid causing damage to the rear window defroster heating filaments do not affix stickers or other objects to the inside of the rear glass.

Air Recirculation

Push and release the Air Recirculation button so that the LED is on, to enter recirculation mode. It is recommended to turn the internal air recirculation on while standing in traffic or in tunnels to prevent the introduction of polluted air.

Do not use the function for a long period of time, particularly if there are many passengers in the vehicle, to prevent the windows from misting up.

NOTE: Internal air recirculation makes it possible to reach the required heating or cooling conditions quickly depending on the mode selected. Do not use the internal air recirculation function on rainy/cold days as it would considerably increase the possibility of the windows misting.

System Maintenance

In Winter, the Climate Control system must be turned on at least once a month for approximately 10 minutes.

Have the system inspected at an authorized dealer before the summer.

NOTE: The system uses R-1234yf (refrigerant) which does not pollute the environment in the event of accidental leakage. Under no circumstances is the use of R-134a (refrigerant) allowed.

Automatic Climate Control Overview

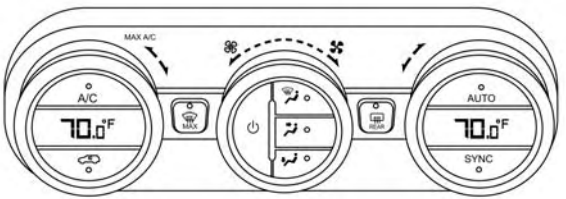

0313101283NA

Automatic Climate Controls

Automatic Climate Control Descriptions

Icon	Description
MAX A/C	**MAX A/C Setting** MAX A/C sets the system for maximum cooling performance. Rotate the driver temperature control adjust knob counterclockwise for MAX A/C. Both driver and passenger temperature displays will show MAX A/C LO. In MAX A/C, the blower speed and mode position can be adjusted to desired user settings. Pressing other settings will cause the MAX A/C operation to switch to the selected setting and MAX A/C to exit.
A/C	**A/C Button** Push the A/C Control Button to change the current setting. The indicator illuminates when the A/C is ON. Pushing the AUTO control button will cause the A/C operation to change to AUTO mode and the A/C indicator will turn off.
SYNC	**SYNC Button** Push the Sync button to toggle the Sync feature ON/OFF. The Sync indicator will illuminate when this feature is enabled. Sync is used to synchronize the passenger temperature setting with the driver temperature setting. Changing the passenger temperature setting while in Sync mode will automatically exit this feature and return to the separate management of air temperatures in the two zones.

Icon	Description
	Recirculation Button Push to change the current setting. The LED illuminates when ON. **NOTE:** • When in Max Defrost mode, the Recirculation button will change the setting to normal Defrost mode. This indicates that you can not enter to this mode due to fogging risk. • When the Auto indicator is ON and the Recirculation indicator is off, the Recirculation is in AUTO mode. If the Recirculation indicator is on, the Recirculation setting is manual and Recirculation is on.
AUTO	**AUTO Button — If Equipped** Pushing this button will automatically control the interior cabin temperature by adjusting airflow distribution and amount. Performing this function will cause the automatic climate controls to change between manual mode and automatic modes.
MAX	**MAX Defrost Button** Push the MAX Defrost button to change the current airflow setting to Defrost mode. The indicator illuminates when this feature is on. Performing this function will cause the automatic climate controls to change to manual mode. The blower speed increases to full (all LEDs on) when MAX Defrost mode is selected, the air conditioning compressor is turned on (LED on), both driver and passenger temperature controls are set to (HI), defrost mode is selected (LED on), rear defroster is turned on (LED on) and the air recirculation is turned off (LED off). If the MAX Defrost mode is turned off, the climate system will return to the previous setting.

Icon	Description
REAR	**Rear Defrost Button** Push the Rear Defrost button to turn on the rear window defroster and the heated outside mirrors (if equipped). An indicator will illuminate when the rear window defroster is on. The rear window defroster automatically turns OFF after 20 minutes.
	Passenger Temperature Knob Provides the passenger with independent temperature control. Rotate the adjustment knob to set desired temperature shown in the Temperature Display. The set temperature is shown on the display. Turning the control knob completely in one direction or the other activates the HI (maximum heating) or LO (maximum cooling) functions shown in the display, respectively. To deactivate these functions, turn the temperature knob to the desired temperature. **NOTE:** Rotating the Passenger Temperature Control knob while in Sync mode will automatically exit Sync.
	Blower Control Knob Blower control is used to regulate the amount of air forced through the climate system. Adjusting the blower will cause the automatic mode to change to manual operation. The speeds can be selected by rotating the Blower Control adjustment knob.
Windshield Mode	**Windshield Mode** Air comes from the outlets directed at the windshield meant for defrosting, and side window demisting. This setting works best in cold or snowy conditions that require extra heat to the windshield.

Icon	Description
Panel Mode	**Panel Mode** Air comes from the outlets in the instrument panel. Each of these outlets can be individually adjusted to direct the flow of air. The air vanes of the center outlets and outboard outlets can be moved up and down or side to side to regulate airflow direction. There is a shut off wheel located below the air vanes to shut off or adjust the amount of airflow from these outlets.
Floor Mode	**Floor Mode** Air comes from the floor outlets. A slight amount of air is directed through the defrost and side window demister outlets.
Bi-Level Mode	**Bi-Level Mode** Bi-Level Mode is obtained by pressing both the Panel Mode button and the Floor Mode button, activating them both. Air comes from the instrument panel outlets and floor outlets. A slight amount of air is directed through the defrost and side window demister outlets. **NOTE:** Bi-Level Mode is designed under comfort conditions to provide cooler air out of the panel outlets and warmer air from the floor outlets.

Icon	Description
Mix Mode	**Mix Mode** Mix Mode is obtained by pressing both the Windshield Mode button and the Floor Mode button, activating them both. Air is directed through the floor, defrost, and side window demister outlets. This setting works best in cold or snowy conditions that require extra heat to the windshield. This setting is good for maintaining comfort while reducing moisture on the windshield.
	Climate Control Power Button Press and release this button to turn the Climate Control on/off.
	Driver Temperature Knob Provides the driver with independent temperature control. Rotate the adjustment knob to set desired temperature shown in the Temperature Display. Rotate fully counterclockwise for maximum A/C (LO). The set temperature is shown on the display. Turning the control knob completely in one direction or the other activates the HI (maximum heating) or LO (maximum cooling) functions shown in the display, respectively. To deactivate these functions, turn the temperature knob to the desired temperature.

CAUTION!

Failure to follow these cautions can cause damage to the heating elements:

- **Use care when washing the inside of the rear window. Do not use abrasive window cleaners on the interior surface of the window. Use a soft cloth and a mild washing solution, wiping parallel to the heating elements. Labels can be peeled off after soaking with warm water.**
- **Do not use scrapers, sharp instruments, or abrasive window cleaners on the interior surface of the window.**
- **Keep all objects a safe distance from the window.**

Climate Control System Compressor

Push the A/C Control button to activate/deactivate the compressor (activation is indicated by the LED on the button turning on).

The system remembers that the compressor has been turned off, even after the engine has stopped.

Pushing the A/C button will stop AUTO MODE (AUTO LED will turn off). To restore automatic control of compressor, push the AUTO button again.

NOTE: With the compressor off, air cannot be introduced to the passenger compartment with a temperature lower than the outside temperature. Under certain environmental conditions, windows could fog rapidly since the air is not dehumidified.

MAX A/C

MAX A/C sets the system for maximum cooling performance.

Rotate the driver temperature control adjust knob counterclockwise for MAX A/C. Both driver and passenger temperature displays will show MAX A/C LO.

In MAX A/C, the blower speed and mode position can be adjusted to desired user settings. Pressing other settings will cause the MAX A/C operation to switch to the selected setting and MAX A/C to exit.

Rapid Window Demisting (MAX-Defrost Function)

Push the MAX-defrost button to activate (LED on) the windshield and side window demisting function.

The Climate Control system carries out the following operations:

- Turns on the air conditioning compressor when environmental conditions are suitable.
- Turns air recirculation off.
- Sets blower fan to the maximum speed.
- Directs air flow to windshield and front side window diffusers.
- Activates the heated rear window defrost.
- Activates the heated windshield (if equipped).
- Displays the fan speed (Blower Control Indicator LED illuminated).

When the function is activated, the AUTO button LED turns off. With the function activated, the only possible manual adjustments are pushing the A/C control button, adjusting the fan speed and turning the heated rear window off.

When the Recirculation Control or AUTO buttons are pushed, the Climate Control system will deactivate the Front Defrost (MAX-DEF) function.

Selecting the footwell/windshield or only windshield distribution activates the Climate Control system compressor and the air recirculation is set to outside air intake.

This logic guarantees optimum visibility at the windows. Max-defrost is also available in manual mode.

Rear Window Defrosting

Push and release the rear window defrost button to turn the function on/off.

Activation of this function is indicated by the rear defrost indicator light on the instrument panel turning on. The function is automatically deactivated after 20 minutes. If equipped, push the rear defrost button to activate the defrosting of door mirrors and heated rear window.

CAUTION!

To avoid causing damage to the rear window defroster heating filaments do not affix stickers or other objects to the inside of the rear glass.

Turning Off The Climate Control System

Push the ON/OFF button.

With the Climate Control system off:

- Air recirculation is on, isolating the passenger compartment from the outside.
- The A/C compressor is off.
- The blower is off.
- The heated rear window can be activated/deactivated.

NOTE: The Climate Control unit stores the temperatures set before the system was turned off and restores them when one of the following knobs/buttons is pushed:

- A/C
- Recirculation
- Max Defrost
- Blower Increase
- AUTO

To restart the Climate Control system in fully automatic mode, push the AUTO button.

System Maintenance

In Winter, the Climate Control system must be turned on at least once a month for approximately 10 minutes.

Have the system inspected at an authorized dealership before the summer.

NOTE: The system uses R-1234yf (refrigerant) which does not pollute the environment in the event of accidental leakage. Under no circumstances is the use of R-134a (refrigerant) allowed.

Automatic Temperature Control (ATC) — If Equipped

Automatic Operation

1. Push the AUTO button on the front ATC panel and the word “AUTO” will illuminate in the front ATC display, along with two temperatures for the driver and front passenger. The system will then automatically regulate the amount of airflow.
2. Adjust the temperature you would like the system to maintain, by adjusting the driver, and passenger temperatures. Once the desired temperature is displayed, the system will achieve and automatically maintain that comfort level.

3. When the system is set up for your comfort level, it is not necessary to change the settings. You will experience the greatest efficiency by simply allowing the system to function automatically.

NOTE:

- It is not necessary to move the temperature settings. The system automatically adjusts the temperature, mode, and fan speed to provide comfort as quickly as possible.

To provide you with maximum comfort in the automatic mode, during cold start-ups, the blower fan will remain on low until the engine warms up. The fan will engage immediately if the Defrost mode is selected, or by changing the front blower knob setting.

Manual Operation Override

This system offers a full complement of manual override features. The AUTO symbol in the front ATC display will be turned off when the system is being used in the manual mode.

NOTE: The system will not automatically sense the presence of fog, mist or ice on the windshield. Defrost mode must be manually selected to clear the windshield and side glass.

Operating Tips

NOTE: Refer to the chart at the end of this section for suggested control settings for various weather conditions.

Summer Operation

The engine cooling system must be protected with a high-quality antifreeze coolant to provide proper corrosion protection and to protect against engine overheating. OAT coolant (conforming to MS.90032) is recommended.

Winter Operation

To ensure the best possible heater and defroster performance, make sure the engine cooling system is functioning properly and the proper amount, type, and concentration of coolant is used. Use of the Air Recirculation mode during Winter months is not recommended, because it may cause window fogging.

Vacation/Storage

Before you store your vehicle, or keep it out of service (i.e., vacation) for two weeks or more, run the air conditioning system at idle for about five minutes, in fresh air with the blower setting on high. This will ensure adequate system lubrication to minimize the possibility of compressor damage when the system is started again.

Window Fogging

Vehicle windows tend to fog on the inside in mild, rainy and/or humid weather. To clear the windows, select Defrost or Mix mode and increase the front blower speed. Do not use the Recirculation mode without A/C for long periods, as fogging may occur.

Outside Air Intake

Make sure the air intake, located directly in front of the windshield, is free of obstructions such as leaves. Leaves collected in the air intake may reduce airflow, and if they enter the plenum, they could plug the water drains. In winter months, make sure the air intake is clear of ice, slush, and snow.

Cabin Air Filter

The climate control system filters out dust and pollen from the air. Contact your authorized dealer to service your cabin air filter, and to have it replaced when needed.

Operating Tips Chart

WEATHER	CONTROL SETTINGS
Hot weather and vehicle interior is very hot	Set the mode control to , on, and blower on high. Roll down the windows for a minute to flush out the hot air. Once comfort is achieved adjust controls for comfort.
Warm weather	Turn on and set the mode control to the position.
Cool Sunny	Operate in position.
Cool & Humid conditions	Set the mode control to and turn on to keep windows clear.
Cold Weather	Set the mode control to the position. If windshield fogging starts to occur, move the control towards the position.

8000cb71

WINDOWS

Driver's Door Controls

The power window switch is located on the driver's door panel. The driver's power window switch controls the operation of all the windows.

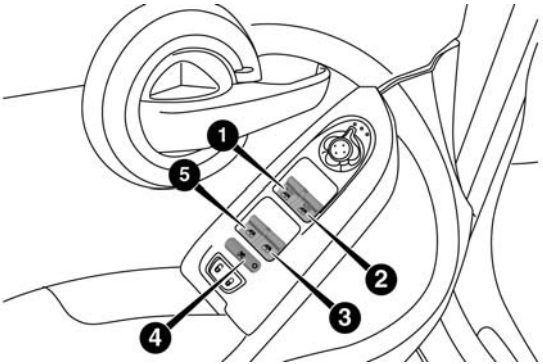

Power Window Switches

1 — Opening/Closing Left Front Window
2 — Opening/Closing Right Front Window
3 — Opening/Closing Right Rear Window
4 — Window Lockout Switch (Rear Doors)
5 — Opening/Closing Left Rear Window

There are single window controls on each passenger door trim panel, which operate the passenger door windows. The window controls will operate only when the ignition is in the ON/RUN or START position.

NOTE: For vehicles equipped with Uconnect, the power window switches will remain active for up to three minutes after the ignition is cycled to the STOP/OFF position. Opening either front door will cancel this feature. Refer to "Uconnect Settings" in "Multimedia" for further information.

WARNING!

Never leave children unattended in a vehicle, and do not let children play with power windows. Do not leave the key fob in or near the vehicle, or in a location accessible to children, and do not leave the ignition of a vehicle equipped with Keyless Enter-N-Go in the ACC or ON/RUN mode. Occupants, particularly unattended children, can become entrapped by the windows while operating the power window switches. Such entrapment may result in serious injury or death.

Auto-Down Feature — If Equipped

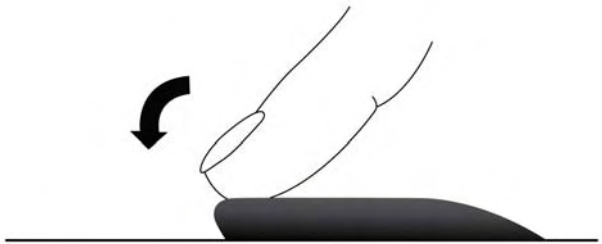

Push To Activate Auto-Down Feature

The driver and passenger power window switches have an Auto-down feature. Push the switch for half a second and release it; the window will go down automatically.

To partially open the window, push the window switch and release it when you want the window to stop.

To stop the window from going all the way down during the Auto-down operation, pull up on the switch briefly when the when the window has reached the desired position.

Auto-Up Feature With Anti-Pinch Protection — If Equipped

Lift To Activate Auto-Up Feature

Lift and hold the window switch for half a second, release, and the window will go up automatically.

To stop the window from going all the way up during the Auto operation, push down on the switch briefly.

To partially close the window, lift the window switch and release it when you want the window to stop.

NOTE:

- If the window runs into any obstacle during auto-closure, it will reverse direction and then go back down. Remove the obstacle and use the window switch again to close the window.
- Any impact due to rough road conditions may trigger the auto-reverse function unexpectedly during auto-closure. If this happens, pull the switch lightly and hold to close the window manually.

WARNING!

There is no anti-pinch protection when the window is almost closed. Be sure to clear all objects from the window before closing.

Reset Auto-Up

Should the Auto-Up feature stop working, the window probably needs to be reset. To reset Auto-Up:

1. Pull the window switch up to close the window completely and continue to hold the switch up for an additional two seconds after the window is closed.

Wind Buffeting

Wind buffeting can be described as the perception of pressure on the ears or a helicopter-type sound in the ears. Your vehicle may exhibit wind buffeting with the windows down, or the sunroof in certain open or partially open positions. This is a normal occurrence and can be minimized. If the buffeting occurs with the rear windows open, open the front and rear windows together to minimize the buffeting. If the buffeting occurs with the sunroof open, adjust the sunroof opening to minimize the buffeting or open any window.

POWER SUNROOF — IF EQUIPPED

The sunroof has two glass panels (the front one is operational and the rear one fixed) and is equipped with two manual operated sun blinds, front and rear.

The power sunroof can be operated only with the ignition is placed in RUN mode.

The power sunroof switches are located in the overhead console.

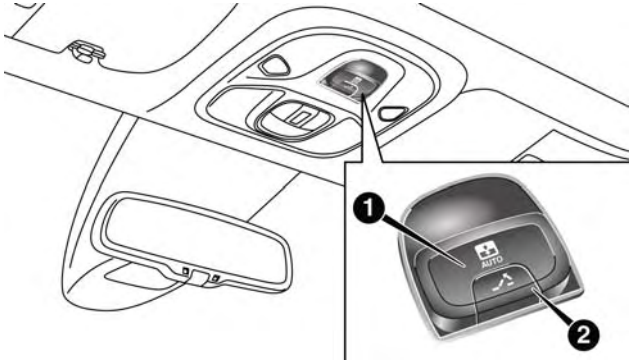

Operation Switch

1 — Front Panel Open/Close Switch
2 — Front Panel Vent Switch

WARNING!

- **Never leave children alone in a vehicle, or with access to an unlocked vehicle. Never leave the key fob in or near the vehicle or in a location accessible to children. Occupants, particularly unattended children, can become entrapped by the power sunroof while operating the power sunroof**

(Continued)

WARNING! *(Continued)*

switch. Such entrapment may result in serious injury or death.

- **In a collision, there is greater risk of being thrown from a vehicle with an open sunroof. You could also be seriously injured or killed. Always fasten your seat belt properly and make sure all passengers are properly secured too.**
- **Do not allow small children to operate the sunroof. Never allow your fingers, other body parts, or any object to project through the sunroof opening. Injury may result.**

Opening The Sunroof

To retract the front panel to the open position, push the open/close button and the sunroof will fully open. The sunroof can be stopped in any position by pushing the switch a second time while is opening.

Venting The Front Panel

To vent the sunroof push and hold the vent switch.

NOTE: The vent switch has the automatic function only at the opening of the roof, during the closing of the roof, the expected functionality is only that manual.

Closing The Sunroof

To close the front panel completely, pull the sunroof switch from the open position. The sunroof can be stopped in any position by pulling the sunroof switch a second time while it is closing.

NOTE: During the open/close or vent operation any push on the switches will stop the closing of the panel.

Wind Buffeting

Wind buffeting can be described as the perception of pressure on the ears or a helicopter-type sound in the ears. Your vehicle may exhibit wind buffeting with the windows down, or the sunroof (if equipped) in certain open or partially open positions. This is a normal occurrence and can be minimized. If the buffeting occurs with the rear windows open, open the front and rear windows together to minimize the buffeting. If the buffeting occurs with the sunroof open, adjust the sunroof opening to minimize the buffeting or open any window.

Sun Shade

The two sun shades are manually operated and can be adjusted in any position.

Anti-Pinch Safety Device

This feature will detect an obstruction in the opening of the sunroof during Express Close operation. If an obstruction in the path of the sunroof is detected, the sunroof will automatically retract. Remove the obstruction if this occurs. Next, push the switch forward and release to Express Close.

Emergency Operation

If the power sunroof switch fails, the sunroof can be operated manually as follows:

1. Remove the protective cap located on the inner lining.
2. Remove the Allen Key that is supplied in the tool bag in the cargo area.
3. Insert the Allen Key into the key hole and turn it clockwise to open the roof or counter-clockwise to close.

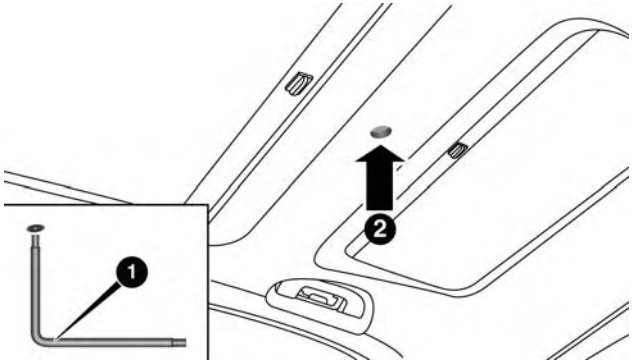

Emergency Key And Key Hole

1 — Allen Key
2 — Key Hole

CAUTION!

- **When refitting sunroof, be careful to avoid fingers, scarves, ties and items of clothing from getting caught under the panel.**
- **Do not open the roof in the presence of snow or ice. There is risk of damage.**

Power Sunroof Relearn Procedure

As a result of any abnormal behavior of the roof or as a result of an emergency operation, and you must relearn the automatic operation of the sunroof.

Proceed as follows:

1. Push the open/close button to move the roof in the fully closed position.
2. Bring the ignition to STOP mode and wait for at least 10 seconds.
3. Bring the ignition to the RUN mode.
4. Pull the open/close button and hold it for at least 10 seconds, after which you should feel the mechanical stop of the electric motor of the roof.
5. Within five seconds, pull to close and hold the open/close button, the roof makes a complete cycle of opening and closing automatically (to indicate that the relearn procedure has been successful). If this does not happen and you need to repeat the procedure from the beginning.

HOOD

Opening

The hood release lever (to open the primary latch) and safety latch (to open the secondary latch) must be released to open the hood.

1. Pull the hood release lever located under the driver's side of the instrument panel.

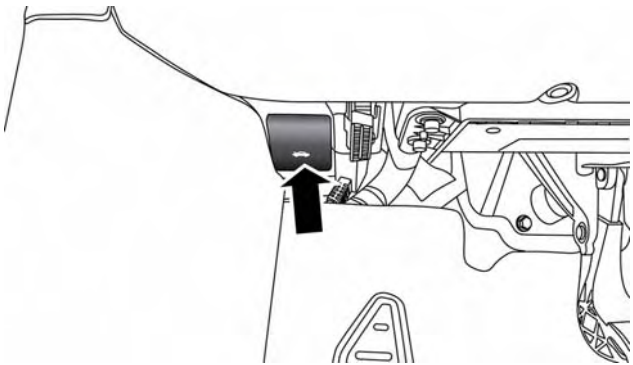

Hood Release Lever

2. Move to the outside of the vehicle.
3. Push the safety latch release lever toward the passenger side of the vehicle. The safety latch is located behind the center front edge of the hood.

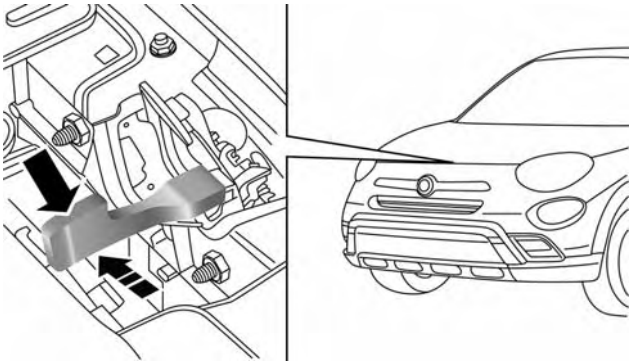

Safety Latch Release lever Location

4. Remove the support rod from the locking tab and insert it into the seat located on the underside of the hood.

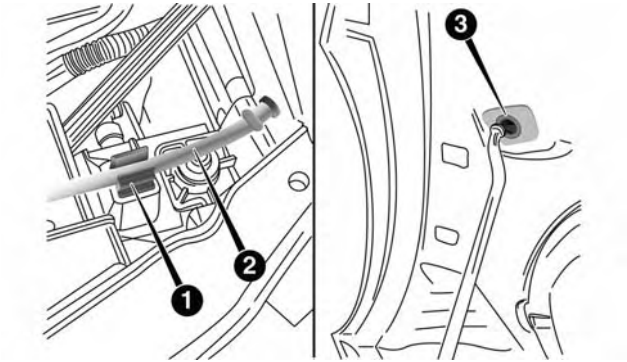

Hood Prop System

1 — Locking Tab
2 — Support Rod
2 — Support Rod Seat

NOTE:

- Before lifting the hood, check that the wiper arms are not in motion and not in the lifted position.
- While lifting the hood, use both hands.
- Vehicle must be at a stop and the automatic transmission must be in PARK. Manual transmission vehicles must have the electric park brake engaged.

Closing

1. Hold up the hood with one hand and with the other hand remove the support rod from its seat and reinsert it into the locking tab.
2. Lower the hood to approximately 12 inches (30 cm) from the engine compartment and drop it. Make sure that the hood is completely closed.

WARNING!

Be sure the hood is fully latched before driving your vehicle. If the hood is not fully latched, it could open when the vehicle is in motion and block your vision. Failure to follow this warning could result in serious injury or death.

CAUTION!

To prevent possible damage, do not slam the hood to close it. Lower hood to approximately 12 inches (30 cm) and drop the hood to close. Make sure hood is fully closed for both latches. Never drive vehicle unless hood is fully closed, with both latches engaged.

LIFTGATE

The liftgate release function is disabled when the vehicle is in motion.

Opening

Opening From Outside

To unlock the liftgate from the outside, squeeze the electronic liftgate release and pull the liftgate open with one fluid motion.

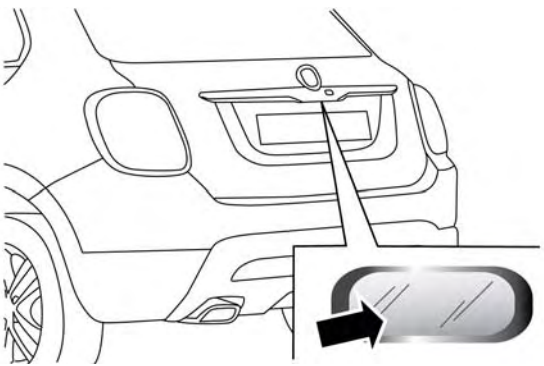

Electronic Liftgate Release

When opening the door, the turn signal lights will flash twice and the interior dome light will illuminate. The interior dome light will turn off automatically by closing the liftgate. Refer to "Interior Lights" in "Getting To Know Your Vehicle."

If the liftgate is left open, the interior dome light will shut off after a few minutes to conserve battery life.

Internal Emergency Release

Proceed as follows:

1. Lower the headrests and fold the seatbacks.

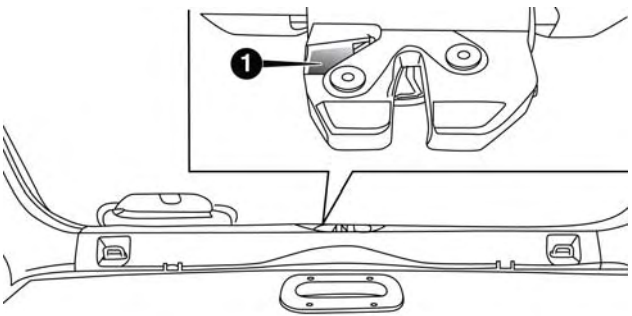

1 — Yellow Tab

2. Using the supplied screwdriver (located under cargo floor in tool kit), remove the yellow tab.

3. Insert the screwdriver into the release tab slot to trigger the release tab of the liftgate.

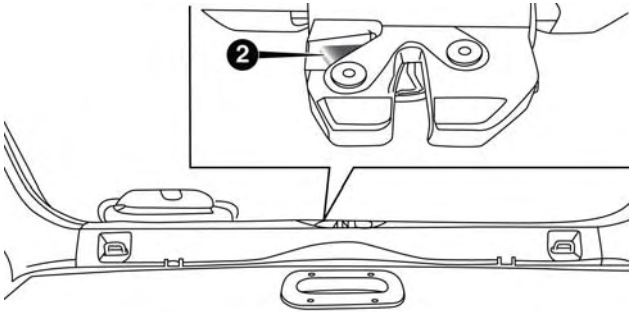

2 — Release Tab Slot

Closing

Grasp the liftgate closing handle and lower the liftgate.

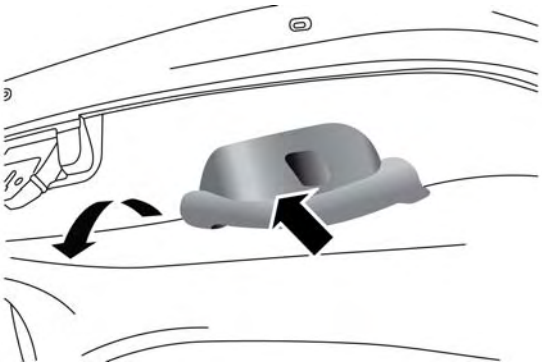

Liftgate Closing Handle

NOTE: Before closing the liftgate, make sure to be in possession of the key because the liftgate will be locked automatically.

Cargo Area Features

Cargo Load Floor — If Equipped

The vehicle is equipped with a load floor that can be adjusted as needed.

Position 1 (Floor Flush):

This position allows you to make the load floor flat for ease of loading/unloading objects from the cargo area. This position also makes it possible to use the space below as another compartment for storing fragile or smaller objects.

Position 2 (Elevated Position):

When the rear seatbacks and front passenger seat is folded flat, it will allow for loading objects of long dimensions. It is recommended to use this position only during the actual transporting of the objects, then bring the load floor in position 1.

NOTE: With a full size spare, the floor will be at the elevated position.

Access To The Loading Floor

To access the double load compartment, proceed as follows:

1. Lift up on the Load Floor Handle.

Load Floor Handle

1 — Cargo Load Floor
2 — Cargo Load Floor Handle

2. Place the desired objects inside the compartment.
3. Reposition the load floor.

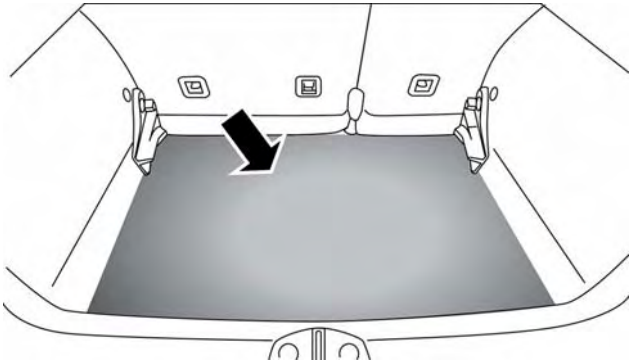

Cargo Area Storage

CAUTION!

The load floor must be arranged in a central position with respect to cargo area.

Displacement Load Floor

To position the load from the lower to the upper position, proceed as follows:

1. Grasp the load floor handle and lift up the load floor.
2. Correctly place the load floor on the side panel guides and on the rear cross member.

Access To Tire Service Kit Or Spare Tire

To access the Tire Service Kit or spare tire and container carrier, proceed as follows:

1. Grasp the load floor handle and remove the floor.
2. Pull the tab and lift up on the carpet.

Anchoring Of The Load

The cargo tie-downs, located on the trim panels around the cargo area floor, should be used to safely secure loads when the vehicle is moving.

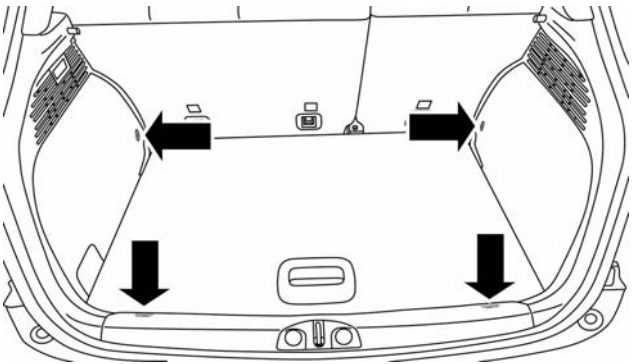

Tie-Downs

Cargo Box — If Equipped

The cargo area contains a preformed cargo box that can be used for the storage of objects that allows you to obtain a uniform level when loading.

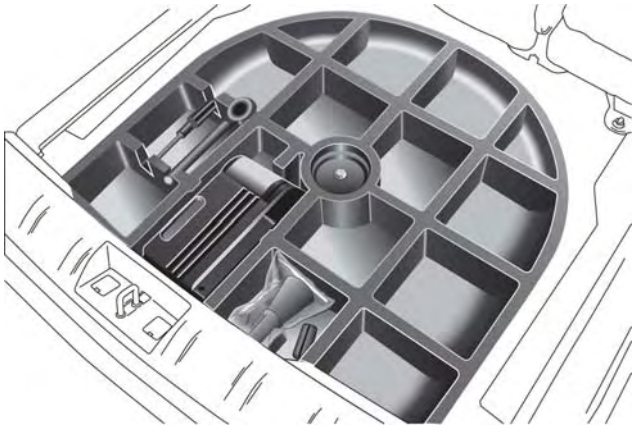

Cargo Box

NOTE: The cargo box is sized for a maximum capacity of distributed weight equal to 242 lbs (110 kg).

INTERNAL EQUIPMENT

Glove Compartments

The glove compartments are located on the passenger side of the instrument panel.

Upper Glove Compartment

To open the upper compartment, push in the button located on the bottom side of the upper door. The door will automatically open.

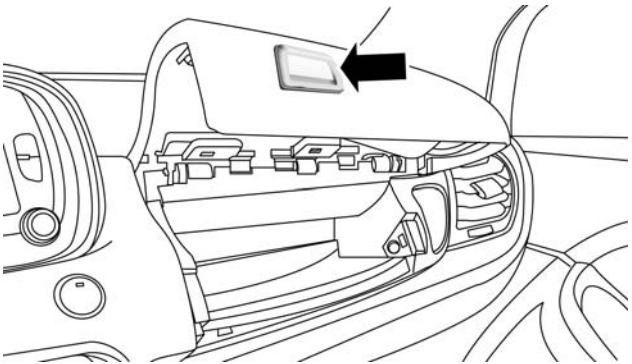

Upper Glove Compartment Button

To close the compartment door, push downward on the door's surface to latch the door closed.

Lower Glove Compartment

To open the lower glove compartment, pull outward on the latch and lower the glove compartment door.

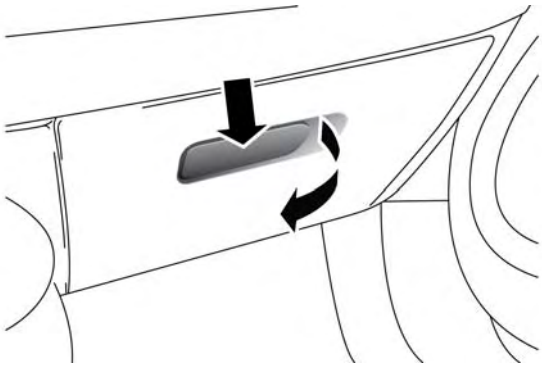

Lower Glove Compartment Latch

Once the glove compartment is open, a light will turn on to illuminate the compartment.

NOTE:

- Do not insert objects in the glove compartments that will not allow the compartment to fully close.
- The glove compartments should be completely closed while the vehicle is in motion.

Sun Visors "Slide-On-Rod"

Sun visors are located on both sides of the rearview mirror. The visors can be lowered or moved to the side to help block sunlight from entering the windshield or door glass.

To move the sun visor against the driver or passenger door glass, remove the sun visor from the hook and turn it toward the side window.

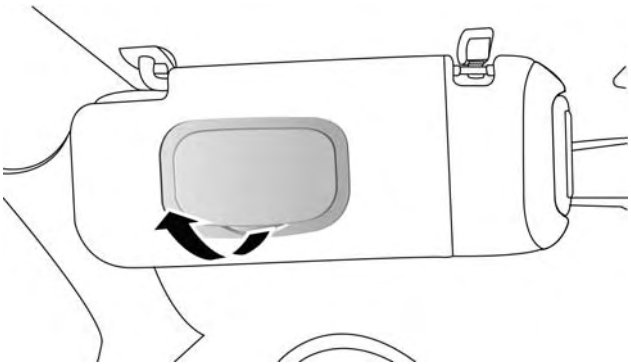

Sun Visor Mirror Cover

The visors also have illuminated vanity mirrors to allow use in low light conditions.

Lift upward on the mirror cover to access the mirror.

Extendible Sun Visor

To extend the sun visor, proceed as follows:

1. Place the sun visor against the door glass by detaching it from the hook and turning it toward the side window.
2. Slide the visor.
3. Slide out the sun visor extender.

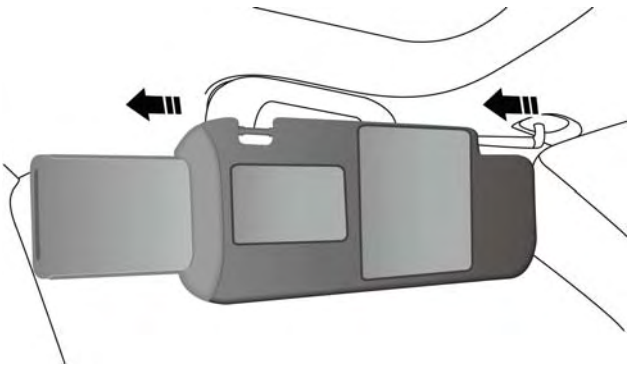

Fully Extended Sun Visor

Power Outlets

The front power outlet is located under the center stack of the instrument panel. It only operates with the ignition in the RUN position.

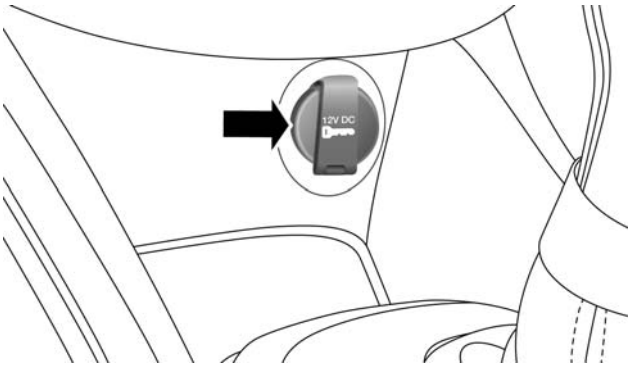

12 Volt Power Outlet

NOTE: The power outlet can be changed to "battery" powered all the time by switching the power outlet Engine Compartment Fuses/Distribution Unit fuse from location F84 to F23.

Models equipped with the optional "smoker kit," will have a cigar lighter instead of the power outlet.

WARNING!

To avoid serious injury or death:
- **Only devices designed for use in this type of outlet should be inserted into any 12 Volt outlet.**
- **Do not touch with wet hands.**
- **Close the lid when not in use and while driving the vehicle.**
- **If this outlet is mishandled, it may cause an electric shock and failure.**

CAUTION!

Do not connect devices with power higher than 180 Watts (15 Amps) to the socket. Do not damage the socket by using unsuitable adaptors. If the 180 Watt (15 Amp) power rating is exceeded the fuse protecting the system will need to be replaced.

CAUTION!

- **Many accessories that can be plugged in draw power from the vehicle's battery, even when not in use (i.e., cellular phones, etc.). Eventually, if**

(Continued)

CAUTION! ***(Continued)***

plugged in long enough, the vehicle's battery will discharge sufficiently to degrade battery life and/or prevent the engine from starting.
- **Accessories that draw higher power (i.e., coolers, vacuum cleaners, lights, etc.) will degrade the battery even more quickly. Only use these intermittently and with greater caution.**
- **After the use of high power draw accessories, or long periods of the vehicle not being started (with accessories still plugged in), the vehicle must be driven a sufficient length of time to allow the generator to recharge the vehicle's battery.**

Cigar Lighter — If Equipped

NOTE: Cigar lighters can be purchased at an authorized dealer through MOPAR parts. To ensure proper cigar lighter operation, a MOPAR knob and element must be used.

The cigar lighter is located on the center console. Push lighter inward to heat.

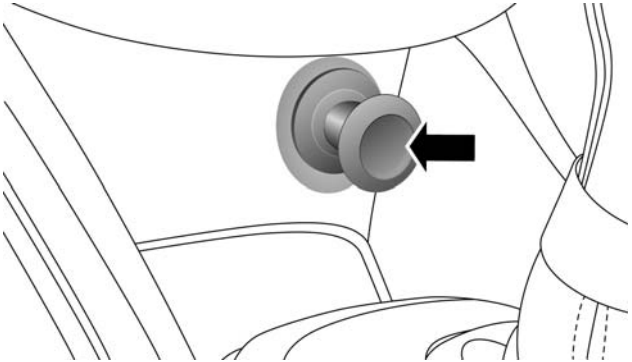

Cigar Lighter

After a few seconds, the lighter automatically returns to its initial position and is ready to be used.

WARNING!

When the cigar lighter is in use it becomes very hot. To avoid serious injury, handle the cigar lighter with care. Always check that the cigar lighter has turned off.

CAUTION!

Do not connect devices with power higher than 180 Watts (15 Amps) to the socket. Do not damage the socket by using unsuitable adaptors. If the 180 Watt (15 Amp) power rating is exceeded the fuse protecting the system will need to be replaced.

Ashtray — If Equipped

NOTE: Ashtrays can be purchased at an authorized dealer through MOPAR parts.

The ashtray is a plastic container that can be placed into one of the cup holders.

Ashtray Location

Front Armrest

The front armrest is located between the front seats.

The armrest can be adjusted by moving it in the direction indicated by the arrows.

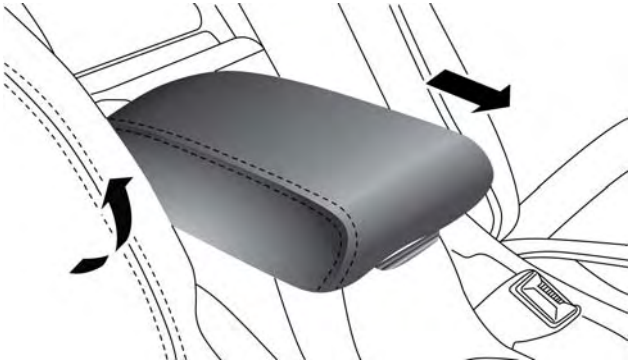

Front Armrest Handle

Storage Compartment

Push the storage handle and lift up the armrest to access the storage compartment.

WARNING!
Do not operate this vehicle with a console compartment lid in the open position. Driving with the console compartment lid open may result in injury in a collision.

Cupholders

There are two cupholders for the front seat passengers, located in the center console.

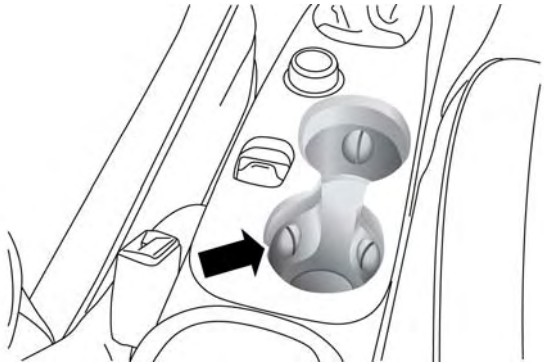

Front Cupholders

Grab Handles

The Grab Handles are located immediately above the doors. The rear handles are equipped with hooks for dress hangers.

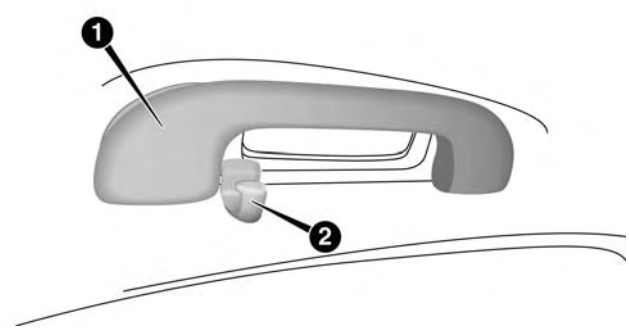

Rear Grab Handle Assembly

1 — Grab Handle
2 — Hook

ROOF LUGGAGE RACK — IF EQUIPPED

Your vehicle may be equipped with a Roof Luggage Rack for transporting accessories.

Crossbars should always be used whenever cargo is placed on the Roof Luggage Rack. Check the straps frequently to be sure that the load remains securely attached.

NOTE: Crossbars can be purchased at a authorized dealer through Mopar parts. External racks do not increase the total load carrying capacity of the vehicle. Be sure that the total occupant and luggage load inside the vehicle, plus the load on the Roof Luggage Rack, do not exceed the maximum vehicle load capacity.

The load carried on the roof, when equipped with a luggage rack, must not exceed 150 lbs (68 kg), and it should be uniformly distributed over the cargo area.

Do not use the sunroof when using the crossbars.

WARNING!

Roof rack cargo must be securely tied down before driving your vehicle. Improperly secured loads may fall off the vehicle, particularly at high speeds, resulting in personal injury or property damage. Follow the Roof Luggage Rack warnings and cautions when carrying cargo on your roof rack.

CAUTION!

- **To avoid damage to the Roof Luggage Rack and vehicle, do not exceed the maximum roof rack load capacity. Always distribute heavy loads as**

(Continued)

CAUTION! ***(Continued)***

evenly as possible and secure the load appropriately.
- **Long loads, which extend over the windshield, such as wood panels or surfboards, should be secured to both the front and rear of the vehicle.**
- **Place a blanket or other protection between the surface of the roof and the load.**
- **Travel at reduced speeds and turn corners carefully when carrying large or heavy loads on the roof rack. Wind forces, due to natural causes or nearby truck traffic, can add sudden upward loads. This is especially true on large flat loads and may result in damage to the cargo or your vehicle.**

GETTING TO KNOW YOUR INSTRUMENT PANEL

CONTENTS

■ INSTRUMENT CLUSTER 120

■ ONBOARD DIAGNOSTIC SYSTEM (OBD II) . .121

- □ Onboard Diagnostic System (OBD II) Cybersecurity 122

■ INSTRUMENT CLUSTER DISPLAY 123

- □ Instrument Cluster Display Description 123
- □ Mapping And Reconfigurable Zone Display — If Equipped 123
- □ Instrument Cluster Display Control Buttons .124
- □ Engine Oil Change Reset 125
- □ Instrument Cluster Display Main Menu 125

■ WARNING AND INDICATOR LIGHTS 132

- □ Red Telltale Indicator Lights 132
- □ Yellow Telltale Indicator Lights 140
- □ Green Telltale Indicator Lights 150
- □ White Telltale Indicator Lights 152
- □ Blue Telltale Indicator Lights 152

INSTRUMENT CLUSTER

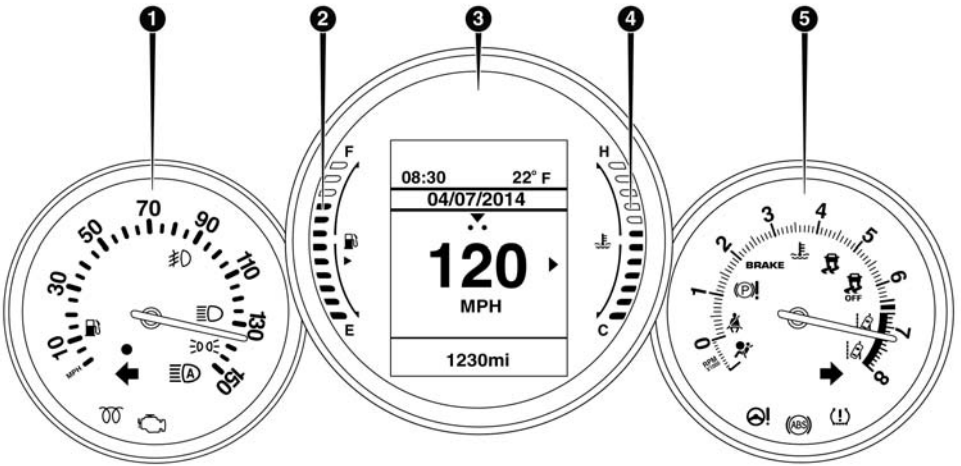

1. Speedometer
   - Indicates the speed of the car.
2. Fuel Level Gauge
   - The fuel gauge in the instrument cluster display indicates the amount of fuel left in the tank.
   - The light comes on, together with a chime and the display of a message in the instrument cluster display, when the gas tank has 1.5 to 2 gallons (5 to 7 liters) of fuel remaining.
3. Instrument Cluster Display
   - The vehicle can be equipped with multifunctional instrument cluster display which offers useful information to the driver.
   - With the ignition in the STOP/OFF position (and the key removed, for vehicles with mechanical key), opening/closing of a door will activate the instrument cluster display for viewing, and display the total miles or kilometers in the odometer.
4. Engine Coolant Temperature
   - The temperature gauge in the instrument cluster display displays the temperature of the engine coolant and starts providing indications when the coolant temperature exceeds approximately 122° F. In the normal use of the car, the temperature gauge can move in different directions based on the use of the car. The light comes on, together with a chime and the display of a message in the instrument cluster display, to indicate an excessive increase in the temperature of the engine coolant. Stop the engine and contact you approved automotive dealer.
5. Tachometer
   - Indicates the engine RPM.

NOTE: The illumination of the graphics on the instrument cluster may vary according to the version (Monocolor or Color display).

ONBOARD DIAGNOSTIC SYSTEM (OBD II)

Your vehicle is equipped with a sophisticated onboard diagnostic system called OBD II. This system monitors the performance of the emissions, engine, and automatic transmission control systems. When these systems are operating properly, your vehicle will provide excellent performance and fuel economy, as well as engine emissions well within current government regulations.

If any of these systems require service, the OBD II system will turn on the "Malfunction Indicator Light (MIL)." It will also store diagnostic codes and other information to assist your service technician in making repairs. Although your vehicle will usually be drivable and not need towing, see your authorized dealer for service as soon as possible.

CAUTION!

- **Prolonged driving with the MIL on could cause further damage to the emission control system. It could also affect fuel economy and driveability. The vehicle must be serviced before any emissions tests can be performed.**
- **If the MIL is flashing, while the engine is running, severe catalytic converter damage and power loss will soon occur. Immediate service is required.**

Onboard Diagnostic System (OBD II) Cybersecurity

Your vehicle is required to have an Onboard Diagnostic system (OBD II) and a connection port to allow access to information related to the performance of your emissions controls. Authorized service technicians may need to access this information to assist with the diagnosis and service of your vehicle and emissions system.

WARNING!

- **ONLY an authorized service technician should connect equipment to the OBD II connection port in order to diagnose or service your vehicle.**
- **If unauthorized equipment is connected to the OBD II connection port, such as a driver-behavior tracking device, it may:**
  - **Be possible that vehicle systems, including safety related systems, could be impaired or a loss of vehicle control could occur that may result in an accident involving serious injury or death.**
  - **Access, or allow others to access, information stored in your vehicle systems, including personal information.**

For further information, refer to "Privacy Practices" and "Uconnect CyberSecurity" in "All About Uconnect Access" in your Owner's Manual Radio Supplement and "Cybersecurity" in "Multimedia".

INSTRUMENT CLUSTER DISPLAY

Instrument Cluster Display Description

The vehicle can be equipped with an instrument cluster display which offers useful information to the driver.

With the ignition in the STOP/OFF position, opening/closing of a door will activate the display for viewing, and display the total miles or kilometers in the odometer.

Mapping And Reconfigurable Zone Display — If Equipped

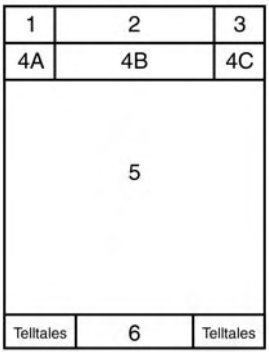

Mapping And Reconfigurable Zone Display

The display shows the following information, if equipped:

ZONE LOCATIONS	CONTENT
Zone 1 & 3	Date Compass Time Ext. Temp
Zone 2	Automatic Gear Display
Zone 4	Audio Information Browsing Arrows Display Menu Titles
Zone 5	Speed Display Trip Fuel Economy Turn By Turn Navigation
Zone 6	Odometer Reading Cruise Control Speed Set Speed Buzzer
Telltales Bottom Left	Red
Telltales Bottom right	Yellow

Instrument Cluster Display Control Buttons

The system allows the driver to select information by pushing the following buttons mounted on the steering wheel:

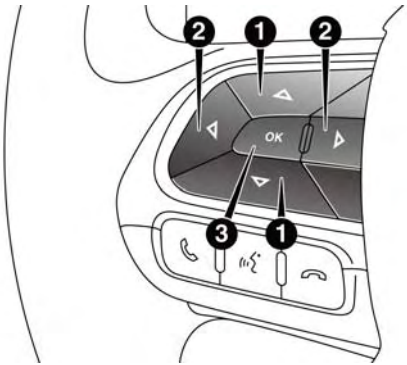

Instrument Cluster Display Control Buttons

1 — Arrow Up/Down Scroll Through Menus And Submenus
2 — Arrow Right/Left Access Information/Submenu Screens
3 — OK Button For Selecting And Resetting Information

- *Up Arrow Button*

△ Push and release the up arrow button to scroll upward through the main menu and submenus.

- *Down Arrow Button*

▽ Push and release the down arrow button to scroll downward through the main menu and submenus.

- *Right Arrow Button*

▷ Push and release the right arrow button to access the information screens or submenu screens of a main menu item.

- *Left Arrow Button*

◁ Push and release the left arrow button to access the information screens or submenu screens of a main menu item.

- *OK Button*

The OK button may be used for the following:

- Select
- Reset (hold)

Engine Oil Change Reset

Your vehicle is equipped with an engine oil change indicator system. The "Change Engine Oil" message will flash in the instrument cluster display for approximately 10 seconds after a single chime has sounded to indicate the next scheduled oil change interval. The engine oil change indicator system is duty cycle based, which means the engine oil change interval may fluctuate, dependent upon your personal driving style.

Unless reset, this message will continue to display each time you turn the ignition switch to the ON/RUN position. To reset the oil change indicator system (after performing the scheduled maintenance), refer to the following procedure.

1. In key-on: press accelerator pedal at 100%, remain in this condition for more than 30 seconds.
2. After this time, always with accelerator pedal down to 100%, press the brake pedal for at least 7 times.
3. Release the pedals.
4. Key-off and wait for Power latch.

NOTE: If the indicator message illuminates when you start the vehicle, the oil change indicator system did not reset. If necessary, repeat this procedure.

Instrument Cluster Display Main Menu

The Main Menu is composed of several options that can be selected using the control buttons above.

NOTE:

- The display mode of the menu items varies depending on the type of display.
- For some items, a submenu is provided.
- In the Uconnect system, some items on the menu are not shown on the instrument cluster display.

Instrument Cluster Display Menu/Submenu Items

The Menu is composed of the following items:

- Trip
  - Speedometer
  - Instantaneous Info
  - Trip A
  - Trip B

- Drive Mode Selector
  - Auto Mode
  - Sport Mode
  - Traction/All Weather Mode
- Vehicle Info
  - Tire Pressure
  - Oil Temperature
  - Battery Voltage
- Driver Assist
  - Lane Departure Warning
- Audio
- Navigation
- Messages
- Settings
  - Display
  - Units
  - Clock & Date
  - Security
  - Safety & Assistance
  - Lights
  - Doors & Locks

Trip

This instrument cluster display menu item allows you to view and select information about the "Trip Computer":

- Speedometer
  - View and change the speedometer scale from MPH to km/h (km/h to MPH).
- Instantaneous info
  - View the distance to empty(miles or km).
  - View the instantaneous consumption (mpg, or l/ 100km or km/l).
- Trip A
  - View and change Trip A distance (miles or km).
  - View and change travel time A (hours/minutes/ seconds).
  - View and change average consumption A (mpg, or l/ 100km or km/l).
  - View and change average speed A (MPH or km/h).

- Trip B
  - View and change Trip B distance (miles or km).
  - View and change travel time B (hours/minutes/seconds).
  - View and change average consumption B (mpg, or l/ 100km or km/l).
  - View and change average speed B (MPH or km/h).

Drive Mode Selector

This instrument cluster display menu/submenu items allows you to view and select information about the "Drive Mode":

- Auto Mode
  - Drive Style
  - Instantaneous consumption
  - Auto Mode Description
- Sport Mode
  - Acceleration
  - Turbo Boost or Engine Power
  - Sport Mode Description
- Traction/All Weather Mode
  - 4x4/4x2 Percentage of Traction
  - Traction Mode Description
  - Temperature
  - All Weather Mode Description

Vehicle Info

Push and release the **up** or **down** arrow button until "Vehicle Info" is highlighted in the instrument cluster display. Push and release the **right** arrow button and Coolant Temp will be displayed. Push the **right** or **left** arrow button to scroll through the following information displays:

- Tire pressure
  - View the information relating to the TPMS system (if equipped).
- Oil Temperature
  - View the engine oil temperature.
- Battery Voltage
  - View the voltage value (state of charge) of the battery.

Driver Assist

This menu item allows you to change the settings ("Notice LaneSense" and "Intensity LaneSense") relating to the LaneSense system (if equipped).

- Notice LaneSense
- By selecting this function, you can select the "readiness" of LaneSense, choosing between the options "Near," "Medium," or "Far."

- Intensity LaneSense
- Using this function, you can select the force applied to the steering wheel to keep the car in the roadway through the electrical drive system due to LaneSense.

Audio

This menu item allows you to view the instrument cluster display and the information present on the display of the Uconnect system.

The information displayed is:

- "Radio (AM or FM)"
- View Radio Station Name (if equipped), frequency, and graphical icon

- "MP3"
- Title display or number song playing

- "USB"
- Title display or number song playing

- "Ipod"
- Display the song title and graphic element.

- Bluetooth Displays the song title and a graphic element.
- SAT displays the station name and a graphic element.
- AUX displays graphic element.
- APP displays strings and a graphic element.

Messages (Stored)

This menu item allows you to display the information messages/malfunction stored.

The background color of the display varies according to the priorities of the failure:

- Failed Messages with low priority displays in yellow

- Failed Messages with high priority displays in red

Settings

This menu item allows you to change the settings for the following:

- **Display**

- **Units**

- **Clock and Date**

- **Security**

- **Safety and Assistance**
- **Lights**
- **Doors and Locks**

Refer to “Uconnect Settings” in “Multimedia” for more information.

Display

By selecting ″Display,″ you can access the following settings:

- Screen Setup: Allows you to configure the display screen.
- Language: Allows you to select the language in which to display the information/warnings.
- Automatic Reset Trip B: Allows you to set the options to reset the Trip B (never, always, every 2 hours or every 8 hours).
- Phone Repetition: Allows you to select “On” or “Off,” The instrument cluster display can also display the information concerning phone mode. The information that can be displayed is the connection status of the mobile phone (phone connected or disconnected), the active telephone calls/incoming/on hold, and the management of double calls (first incoming second waiting, etc.).
- Navigation Repetition: Allows you to select “On” or “Off”, on the instrument cluster display, information relating to the navigation mode.

Units

By selecting the item ″Units Of Measure,″ you can select the unit of measure used in the display.

Possible options are:

- US
- Metric
- Custom

Clock And Date

By selecting the item ″clock and date,″ you can adjust the clock.

Possible options are:

- Set Time: Adjust hours/minutes.
- Set Format: Adjust the time format ″12h″ (12 hours) or ″24h″ (24 hours).
- Set Date: Adjust day/month/year.

Security

By selecting the item "Security," you can make the following adjustments:

- Speed Warning: Set the vehicle speed limit (MPH or km/h), which the driver is notified through a visual and acoustic signaling (display of a message and a symbol on the display).
- Seat Belt Buzzer: This function is only viewable when the Seat Belt Reminder (SBR) system is active.
- Hill Start Assist: Activation/Deactivation of the Hill Start Assist system.

Safety And Assistance

By selecting the item "Safety & Assistance," you can make the following adjustments:

- FCW: A selection of operating modes of the system Forward Collision Warning Plus.
- FCW Sensitivity: A selection of the "readiness" of intervention of the Forward Collision Warning Plus system, based on the distance to the obstacle.
- ParkSense: A selection of the type of information provided by ParkSense.
- ParkSense Vol.: A selection of the volume of acoustic signals provided by ParkSense.
- Auto Wipers: Enabling/disabling the automatic operation of wipers in the event of rain.
- LaneSense Warning: A selection of the "readiness" of intervention of LaneSense.
- Warning Buzzer Volume: Increase or decrease the volume of the buzzerby selecting "Low", "Medium", or "High".
- Maintenance Brakes — If Equipped: Activation of the procedure to carry out braking system maintenance.
- Auto Park Brake — If Equipped: Enable/disable auto-insertion of the Electric Parking Brake.

Lights

By selecting the item "Lights," you can make the following adjustments:

- Headlight Off Delay: Set the delay for headlight shutoff after engine shutoff.
- Headlight Sensor: Adjust the sensitivity of headlight brightness.

- Interior Ambient Lights: Increase of decrease the brightness of the Interior Ambient Lights.
- Greeting Lights: Enable/disable the vehicle's Greeting Lights.
- Auto High Beam: Activate/deactivate the automatic main beam headlights — If Equipped.
- Daytime Lights: Activate/deactivate the daytime running lights.
- Cornering Lights: activate/deactivate the cornering lights — If Equipped.

Doors And Locks

By selecting the item "Doors & Locks," you can make the following adjustments:

- Auto Door Lock: Activate/deactivate the automatic locking of the doors with the vehicle moving.
- Auto Unlock On Exit: Automatic unlocking of the doors when exiting the vehicle.
- Flash Light With Lock: Activate the direction indicators when closing the doors.
- Sound Horn With Lock: Activate/deactivate the horn when pushing the lock button on the Remote Keyless Entry. The options are "Off," "First Press," and "Second Press."
- Horn With Remote Start: activate/deactivate the horn at the Remote Starting of the engine with the Remote Keyless Entry.
- Unlock On First Press Of Key Fob (vehicles without Passive Entry): allows you to choose whether to unlock all the doors or only the driver's side door on the first push of the unlock button on the Remote Keyless Entry.
- Remote Door Unlock: Allows you to open the driver door only on the first push of the unlock button on the Remote Keyless Entry.
- Passive Entry — If Equipped: Activate the automatic locking of the doors.

WARNING AND INDICATOR LIGHTS

The warning/indicator lights switch on in the instrument panel together with a dedicated message and/or acoustic signal when applicable. These indications are indicative and precautionary and as such must not be considered as exhaustive and/or alternative to the information contained in the Owner's Manual, which you are advised to read carefully in all cases. Always refer to the information in this chapter in the event of a failure indication.

Red Telltale Indicator Lights

All active telltales will display first if applicable. The system check menu may appear different based upon equipment options and current vehicle status. Some telltales are optional and may not appear.

Air Bag Warning Light

Red Telltale Light	What It Means
	Air Bag Warning Light This light will turn on for four to eight seconds as a bulb check when the ignition switch is first turned to ON/RUN. If the light is either not on during startup, stays on, or turns on while driving, have the system inspected at an authorized dealer as soon as possible. This light will illuminate with a single chime when a fault with the Air Bag Warning Light has been detected, it will stay on until the fault is cleared. If the light comes on intermittently or remains on while driving, have an authorized dealer service the vehicle immediately. Refer to "Occupant Restraints" in "Safety" for further information.

Seat Belt Reminder Warning Light

Red Telltale Light	What It Means
	Seat Belt Reminder Warning Light When the ignition switch is first turned to ON/RUN, this light will turn on for four to eight seconds as a bulb check. During the bulb check, if the driver's seat belt is unbuckled, a chime will sound. After the bulb check or when driving, if the driver's seat belt remains unbuckled, the Seat Belt Reminder Light will flash or remain on continuously and a chime will sound. Refer to "Occupant Restraint Systems" in "Safety" for further information.

Brake Warning Light

Red Telltale Light	What It Means
BRAKE English Metric	**Brake Warning Light** This light monitors various brake functions, including brake fluid level and parking brake application. If the brake light turns on it may indicate that the parking brake is applied, that the brake fluid level is low, or that there is a problem with the anti-lock brake system reservoir. If the light remains on when the parking brake has been disengaged, and the fluid level is at the full mark on the master cylinder reservoir, it indicates a possible brake hydraulic system malfunction or that a problem with the Brake Booster has been detected by the Anti-Lock Brake System (ABS) / Electronic Stability Control (ESC) system. In this case, the light will remain on until the condition has been corrected. If the problem is related to the Brake Booster, the ABS pump will run when applying the brake, and a brake pedal pulsation may be felt during each stop. **NOTE:** Brake Warning Light may illuminate due to excessive wear to brake pads.

The dual brake system provides a reserve braking capacity in the event of a failure to a portion of the hydraulic system. A leak in either half of the dual brake system is indicated by the Brake Warning Light, which will turn on when the brake fluid level in the master cylinder has dropped below a specified level.

The light will remain on until the cause is corrected.

NOTE: The light may flash momentarily during sharp cornering maneuvers, which change fluid level conditions. The vehicle should have service performed, and the brake fluid level checked.

If brake failure is indicated, immediate repair is necessary.

WARNING!

Driving a vehicle with the red brake light on is dangerous. Part of the brake system may have failed. It will take longer to stop the vehicle. You could have a collision. Have the vehicle checked immediately.

Vehicles equipped with the Anti-Lock Brake System (ABS) are also equipped with Electronic Brake Force Distribution (EBD).

CAUTION!

In the event of an EBD failure, the Brake Warning Light will turn on along with the ABS Light. Immediate repair to the ABS system is required.

Operation of the Brake Warning Light can be checked by placing the ignition in the MAR (ACC/ON/RUN) position. The light should illuminate for approximately two seconds. The light should then turn off unless the parking brake is applied or a brake fault is detected. If the light does not illuminate, have the light inspected by an authorized dealer.

The light also will turn on when the parking brake is applied with the ignition placed in the MAR (ACC/ON/RUN) position.

NOTE: This light shows only that the parking brake is applied. It does not show the degree of brake application.

Battery Charge Warning Light

Red Telltale Light	What It Means
	Battery Charge Warning Light This light illuminates when the battery is not charging properly. If it stays on while the engine is running, there may be a malfunction with the charging system. Contact your authorized dealer as soon as possible. This indicates a possible problem with the electrical system or a related component. If jump starting is required, refer to “Jump Starting” in “In Case Of Emergency.”

Coolant Temperature Warning Light

Red Telltale Light	What It Means
	Coolant Temperature Warning Light This light warns of an overheated engine condition. If the light turns on while driving, safely pull over and stop the vehicle. If the A/C system is on, turn it off. Also, shift the transmission into NEUTRAL and idle the vehicle. If the temperature reading does not return to normal, turn the engine off immediately and call for service. **NOTE:** As the coolant temperature gauge approaches "H," a Red Dot lamp located to the left of the "H" will illuminate and a single chime will sound. Further overheating will cause the temperature gauge to pass "H." In this case, a continuous chime will sound until the engine is allowed to cool or the 4 minute duration is expired, whichever comes first.

Door Open Warning Light

Red Telltale Light	What It Means
	Door Open Warning Light This indicator will illuminate when a door is ajar/open and not fully closed. • Driver's Door Open • Passenger Door Open • Driver and Passenger Door Open

Electric Power Steering Fail Warning Light — If Equipped

Red Telltale Light	What It Means
	Electric Power Steering Fail Warning — If Equipped This light is used to manage the electrical warning of the EPS (Electric Power Steering). Refer to “Power Steering” in “Starting And Operating” for further information.

Hood Open Warning Light — If Equipped

Red Telltale Light	What It Means
	Hood Open Warning Light This indicator will illuminate when the hood is ajar/open and not fully closed.

Oil Pressure Warning Light

Red Telltale Light	What It Means
	Oil Pressure Warning Light This light indicates low engine oil pressure. If the light turns on while driving, stop the vehicle and shut off the engine as soon as possible. A chime will sound when this light turns on.

Red Telltale Light	What It Means
	Do not operate the vehicle until the cause is corrected. This light does not indicate how much oil is in the engine. The engine oil level must be checked under the hood.

Transmission Fault Warning Light

Red Telltale Light	What It Means
	Transmission Fault Warning Light This light will illuminate (together with a message in the instrument cluster display and a buzzer) to indicate a transmission fault. Contact your authorized dealer if the message remains after restarting the engine.

WARNING!

If you continue operating the vehicle when the Transmission Temperature Warning Light is illuminated you could cause the fluid to boil over, come in contact with hot engine or exhaust components and cause a fire.

CAUTION!

Continuous driving with the Transmission Temperature Warning Light illuminated will eventually cause severe transmission damage or transmission failure.

Vehicle Security Warning Light — If Equipped

Red Telltale Light	What It Means
●	**Vehicle Security Warning Light — If Equipped** This light will flash at a fast rate for approximately 15 seconds when the vehicle security alarm is arming, and then will flash slowly until the vehicle is disarmed.

Electronic Throttle Control (ETC) Warning Light

Red Telltale Light	What It Means
	Electronic Throttle Control (ETC) Warning Light This light informs you of a problem with the Electronic Throttle Control (ETC) system. If a problem is detected while the engine is running, the light will either stay on or flash depending on the nature of the problem. Cycle the ignition key when the vehicle is safely and completely stopped and the transmission is placed in the PARK position. The light should turn off. If the light remains on with the engine running, your vehicle will usually be drivable; however, see an authorized dealer for service as soon as possible. If the light continues to flash when the engine is running, immediate service is required and you may experience reduced performance, an elevated/rough idle, or engine stall and your vehicle may require towing. The light will come on when the ignition is first placed in the MAR (ACC/ON/RUN) position and remain on briefly as a bulb check. If the light does not come on during starting, have the system checked by an authorized dealer.

Yellow Telltale Indicator Lights

Low Fuel Indicator Light

Yellow Telltale Light	What It Means
	Low Fuel Indicator Light When the fuel level reaches approximately 1.3–1.8 gal (5–7 L) this light will turn on, and remain on until fuel is added.

Engine Check/Malfunction Indicator Light (MIL)

Yellow Telltale Light	What It Means
	Engine Check/Malfunction Indicator Light (MIL) The Engine Check/Malfunction Indicator Light (MIL) is a part of an Onboard Diagnostic System called OBD II that monitors engine and automatic transmission control systems. The light will illuminate when the ignition is in the MAR (ACC/ON/RUN) position before engine start. If the bulb does not come on when turning the key from STOP (OFF/LOCK) to MAR (ACC/ON/RUN), have the condition checked promptly. Certain conditions, such as a loose or missing gas cap, poor quality fuel, etc., may illuminate the light after engine start. The vehicle should be serviced if the light stays on through several typical driving styles. In most situations, the vehicle will drive normally and will not require towing.

Yellow Telltale Light	What It Means
	When the engine is running, the MIL may flash to alert serious conditions that could lead to immediate loss of power or severe catalytic converter damage. The vehicle should be serviced as soon as possible if this occurs.

WARNING!

A malfunctioning catalytic converter, as referenced above, can reach higher temperatures than in normal operating conditions. This can cause a fire if you drive slowly or park over flammable substances such as dry plants, wood, cardboard, etc. This could result in death or serious injury to the driver, occupants or others.

CAUTION!

Prolonged driving with the Malfunction Indicator Light (MIL) on could cause damage to the vehicle control system. It also could affect fuel economy and driveability. If the MIL is flashing, severe catalytic converter damage and power loss will soon occur. Immediate service is required.

Wait To Start Light — If Equipped

Yellow Telltale Light	What It Means
	Wait To Start Light The "Wait To Start" telltale will illuminate for approximately two seconds when the ignition is turned to the RUN position. It's duration may be longer based on colder operating conditions. Vehicle will not initiate start until telltale is out. Refer to "Starting The Engine" in "Starting And Operating" for further information. **NOTE:** The "Wait To Start" telltale may not illuminate if the intake manifold temperature is warm enough.

Vehicle Security Indicator Light

Yellow Telltale Light	What It Means
	Vehicle Security Indicator Light This indicator will illuminate when the vehicle security alarm system has detected an attempt was made to break into the vehicle.

Transmission Temperature Indicator Light

Yellow Telltale Light	What It Means
	Transmission Temperature Indicator Light This light indicates that the transmission fluid temperature is running hot. This may occur with severe usage, such as trailer towing. If this light turns on, safely pull over and stop the vehicle. Then, shift the transmission into NEUTRAL and run the engine at idle or faster until the light turns off.

WARNING!

If you continue operating the vehicle when the Transmission Temperature Warning Light is illuminated you could cause the fluid to boil over, come in contact with hot engine or exhaust components and cause a fire.

CAUTION!

Continuous driving with the Transmission Temperature Warning Light illuminated will eventually cause severe transmission damage or transmission failure.

Tire Pressure Monitoring System (TPMS) Warning Light

Yellow Telltale Light	What It Means
	Tire Pressure Monitoring System (TPMS) Warning Light The warning light switches on and a message is displayed to indicate that the tire pressure is lower than the recommended value and/or that slow pressure loss is occurring. In these cases, optimal tire duration and fuel consumption may not be guaranteed. Should one or more tires be in the condition mentioned above, the display will show the indications corresponding to each tire in sequence.

CAUTION!

Do not continue driving with one or more flat tires as handling may be compromised. Stop the vehicle, avoiding sharp braking and steering. Repair immediately using the dedicated tire repair kit and contact your authorized dealer as soon as possible.

Each tire, including the spare (if provided), should be checked monthly when cold and inflated to the inflation pressure recommended by the vehicle manufacturer on the vehicle placard or tire inflation pressure label. (If your vehicle has tires of a different size than the size indicated on the vehicle placard or tire inflation pressure label, you should determine the proper tire inflation pressure for those tires.)

As an added safety feature, your vehicle has been equipped with a tire pressure monitoring system (TPMS) that illuminates a low tire pressure telltale when one or more of your tires is significantly under-inflated. Accordingly, when the low tire pressure telltale illuminates, you should stop and check your tires as soon as possible, and inflate them to the proper pressure. Driving on a significantly under-inflated tire causes the tire to overheat and can lead to tire failure.

Under-inflation also reduces fuel efficiency and tire tread life, and may affect the vehicle's handling and stopping ability.

Please note that the TPMS is not a substitute for proper tire maintenance, and it is the driver's responsibility to maintain correct tire pressure, even if under-inflation has not reached the level to trigger illumination of the TPMS low tire pressure telltale.

Your vehicle has also been equipped with a TPMS malfunction indicator to indicate when the system is not operating properly. The TPMS malfunction indicator is combined with the low tire pressure telltale. When the system detects a malfunction, the telltale will flash for approximately one minute and then remain continuously illuminated. This sequence will continue upon subsequent vehicle start-ups as long as the malfunction exists. When the malfunction indicator is illuminated, the system may not be able to detect or signal low tire pressure as intended. TPMS malfunctions may occur for a variety of reasons, including the installation of replacement or alternate tires or wheels on the vehicle that prevent the TPMS from functioning properly. Always check the TPMS malfunction telltale after replacing one or more tires or wheels on your vehicle to ensure that the replacement or alternate tires and wheels allow the TPMS to continue to function properly.

CAUTION!

The TPMS has been optimized for the original equipment tires and wheels. TPMS pressures and warning have been established for the tire size equipped on your vehicle. Undesirable system operation or sensor damage may result when using replacement equipment that is not of the same size, type, and/or style. Aftermarket wheels can cause sensor damage. Using aftermarket tire sealants may cause the Tire Pressure Monitoring System (TPMS) sensor to become inoperable. After using an aftermarket tire sealant it is recommended that you take your vehicle to an authorized dealer to have your sensor function checked.

Stop Light Failure Indicator Light

Yellow Telltale Light	What It Means
STOP	**Stop Light Failure Indicator Light** This light will illuminate if one or more of the stop light bulb fails. The failure relating to this light could be: • One or more blown bulbs • A blown protection fuse • A break in the electrical connection

Service Warning Indicator Light – If Equipped

Yellow Telltale Light	What It Means
	Service Warning Indicator Light The “Scheduled Servicing Plan” includes vehicle maintenance at fixed intervals, refer to the ″Maintaining And Caring For Your Vehicle″ chapter. This message is displayed automatically along with the warning light when the key is turned to ON - 1242 miles (2,000 km) before these deadlines and reappears every 124 miles (200 km). Below 124 miles (200 km) servicing indications are more frequent. The indication will appear in miles or kilometers according to the ″Unit Of Measurement″ settings. When the next scheduled service is approaching and the key is turned to ON, the word Service will appear on the display, followed by the number of miles or kilometers left. Contact a dedicated authorized dealership. The operations in the “Scheduled Servicing Plan” will be performed and the message will be reset.

Service Stop/Start System Indicator Light — If Equipped

Yellow Telltale Light	What It Means
	Service Stop/Start System Indicator Light — If Equipped This telltale will turn on to indicate the Stop/Start system is not functioning properly and service is required.

Anti-Lock Brake (ABS) Indicator Light

Yellow Telltale Light	What It Means
	Anti-Lock Brake (ABS) Indicator Light This light monitors the Anti-Lock Brake System (ABS). The light will turn on when the ignition is placed in the ON/RUN position and may stay on for as long as four seconds. If the ABS light remains on or turns on while driving, then the Anti-Lock portion of the brake system is not functioning and service is required. However, the conventional brake system will continue to operate normally if the brake warning light is not on. If the ABS light is on, the brake system should be serviced as soon as possible to restore the benefits of Anti-Lock Brakes. If the ABS light does not turn on when the ignition is placed in the ON/RUN position, have the light inspected by an authorized dealer.

Electric Park Brake Fail Light

Yellow Telltale Light	What It Means
	Electric Park Brake Fail Warning Light This telltale will turn on to indicate the Electric Park Brake is not functioning properly and that service is required. Contact your authorized dealership.

Exterior Bulb Failure Indicator Light

Yellow Telltale Light	What It Means
	Exterior Bulb Failure Indicator Light This light will illuminate when there is a malfunction in one of the exterior bulbs.

Electronic Stability Control (ESC) Indicator Light — If Equipped

Yellow Telltale Light	What It Means
	Electronic Stability Control (ESC) Indicator Light The "ESC Indicator Light" in the instrument cluster will come on when the ignition switch is turned to the AVV/START position. If the "ESC Indicator Light" comes on continuously with the engine running, a malfunction has been detected in the ESC system. If this light remains on after several ignition cycles, and the vehicle has been driven several miles (kilometers) at speeds greater than 30 mph (48 km/h), see your authorized dealer as soon as possible to have the problem diagnosed and corrected. • The "ESC Off Indicator Light" and the "ESC Indicator Light" come on momentarily each time the ignition switch is turned to AVV/START. • Each time the ignition is turned to AVV/START, the ESC system will be ON, even if it was turned off previously. • The ESC system will make buzzing or clicking sounds when it is active. This is normal; the sounds will stop when ESC becomes inactive following the maneuver that caused the ESC activation.

Electronic Stability Control (ESC) OFF Indicator Light

Yellow Telltale Light	What It Means
OFF	**Electronic Stability Control (ESC) OFF Indicator Light** This light indicates the Electronic Stability Control (ESC) is off.

Green Telltale Indicator Lights

Turn Signal Indicator Lights

Green Telltale Light	What It Means
	Turn Signal Indicator Lights The instrument cluster arrow will flash independently for the left or right turn signal as selected, as well as the exterior turn signal lamp(s) (front and rear) as selected when the multi-function lever is moved down (left) or up (right).

Park/Headlight On Indicator Light

Green Telltale Light	What It Means
	Park/Headlight On Indicator Light This indicator will illuminate when the park lights or headlights are turned on.

Front Fog Indicator Light — If Equipped

Green Telltale Light	What It Means
	Front Fog Indicator Light — If Equipped This indicator will illuminate when the front fog lights are on.

Cruise Control Engaged Indicator Light — If Equipped

Green Telltale Light	What It Means
	Cruise Control Engaged Indicator Light This light will turn on when the cruise control has been set to a certain speed.

White Telltale Indicator Lights

Cruise Control On Indicator Light

White Telltale Light	What It Means
	Cruise Control On Indicator Light This light will turn on when the cruise control has been enabled by the driver.

Blue Telltale Indicator Lights

High Beam Indicator Light

Blue Telltale Light	What It Means
	High Beam Indicator Light This indicator shows that the high beam headlights are on. Push the multifunction control lever away from you to switch the headlights to high beam. Pull the lever toward you to switch the headlights back to low beam. If the driver's door is open, and the headlights or park lights are left on, the high beam indicator light will remain illuminated.

SAFETY

CONTENTS

■ BRAKE SYSTEM 154

■ ELECTRONIC BRAKE CONTROL SYSTEM . . .154

- □ Electronic Brake Force Distribution (EBD) . . .155
- □ Brake System Warning Light. 155
- □ Anti-Lock Brake System (ABS) 155
- □ Anti-Lock Brake Warning Light. 156
- □ Brake Assist System (BAS) 157
- □ Hill Start Assist (HSA) 157
- □ Traction Control System (TCS) 159
- □ Electronic Stability Control (ESC) 159
- □ Electronic Roll Mitigation (ERM) 161
- □ Dynamic Steering Torque (DST) 161

■ OCCUPANT RESTRAINT SYSTEMS 162

- □ Occupant Restraint Systems Features 162
- □ Important Safety Precautions 162
- □ Seat Belt Systems 163
- □ Supplemental Restraint Systems (SRS) 174
- □ Child Restraints 188
- □ Transporting Pets 205

■ SAFETY TIPS 205

- □ Transporting Passengers. 205
- □ Exhaust Gas 206
- □ Safety Checks You Should Make Inside The Vehicle 207
- □ Periodic Safety Checks You Should Make Outside The Vehicle 209

BRAKE SYSTEM

Your vehicle is equipped with dual hydraulic brake systems. If either of the two hydraulic systems loses normal capability, the remaining system will still function. However, there will be some loss of overall braking effectiveness. This will be evident by increased pedal travel during application and greater pedal force required to slow or stop the vehicle. In addition, if the malfunction is caused by a leak in the hydraulic system, the "Brake Warning Light" will turn on as the brake fluid level drops in the master cylinder.

In the event power assist is lost for any reason (i.e., repeated brake applications with the engine OFF) the brakes will still function. However, the effort required to brake the vehicle will be much greater than that required with the power system operating.

WARNING!

- **Riding the brakes can lead to brake failure and possibly a collision. Driving with your foot resting or riding on the brake pedal can result in abnormally high brake temperatures, excessive**

(Continued)

WARNING! ***(Continued)***

lining wear, and possible brake damage. You would not have your full braking capacity in an emergency.

- **Driving a vehicle with the "Brake Warning Light" on is dangerous. A significant decrease in braking performance or vehicle stability during braking may occur. It will take you longer to stop the vehicle or will make your vehicle harder to control. You could have a collision. Have the vehicle checked immediately.**

ELECTRONIC BRAKE CONTROL SYSTEM

Your vehicle is equipped with an advanced Electronic Brake Control system (EBC). This system includes Electronic Brake Force Distribution (EBD), Anti-Lock Brake System (ABS), Brake Assist System (BAS), Hill Start Assist (HSA), Traction Control System (TCS), Electronic Stability Control (ESC), Dynamic Steering Torque (DST) and Electronic Roll Mitigation (ERM). These systems work together to enhance both vehicle stability and control in various driving conditions.

Electronic Brake Force Distribution (EBD)

This function manages the distribution of the braking torque between the front and rear axles by limiting braking pressure to the rear axle. This is done to prevent overslip of the rear wheels to avoid vehicle instability, and to prevent the rear axle from entering ABS before the front axle.

Brake System Warning Light

The red "Brake System Warning Light" will turn on when the ignition switch is turned to the ON position and may stay on for as long as four seconds.

If the "Brake System Warning Light" remains on or comes on while driving, it indicates that the brake system is not functioning properly and that immediate service is required. If the "Brake System Warning Light" does not come on when the ignition switch is turned to the ON position, have the light repaired as soon as possible.

Anti-Lock Brake System (ABS)

The Anti-Lock Brake System (ABS) provides increased vehicle stability and brake performance under most braking conditions. The system automatically prevents wheel lock, and enhances vehicle control during braking.

The ABS performs a self-check cycle to ensure that the ABS is working properly each time the vehicle is started and driven. During this self-check, you may hear a slight clicking sound as well as some related motor noises.

ABS is activated during braking when the system detects one or more wheels begins to lock. Road conditions such as ice, snow, gravel, bumps, railroad tracks, loose debris, or panic stops may increase the likelihood of ABS activation(s).

You also may experience the following when ABS activates:

- The ABS motor noise (it may continue to run for a short time after the stop).
- The clicking sound of solenoid valves.
- Brake pedal pulsations.
- A slight drop of the brake pedal at the end of the stop.

These are all normal characteristics of ABS.

WARNING!

- **The ABS contains sophisticated electronic equipment that may be susceptible to interference caused by improperly installed or high output radio transmitting equipment. This interference can cause possible loss of anti-lock braking capability. Installation of such equipment should be performed by qualified professionals.**
- **Pumping of the Anti-Lock Brakes will diminish their effectiveness and may lead to a collision. Pumping makes the stopping distance longer. Just press firmly on your brake pedal when you need to slow down or stop.**
- **The ABS cannot prevent the natural laws of physics from acting on the vehicle, nor can it increase braking or steering efficiency beyond that afforded by the condition of the vehicle brakes and tires or the traction afforded.**
- **The ABS cannot prevent collisions, including those resulting from excessive speed in turns, following another vehicle too closely, or hydroplaning.**

(Continued)

WARNING! ***(Continued)***

- **The capabilities of an ABS equipped vehicle must never be exploited in a reckless or dangerous manner that could jeopardize the user's safety or the safety of others.**

ABS is designed to function with the OEM tires. Modification may result in degraded ABS performance.

Anti-Lock Brake Warning Light

The yellow "Anti-Lock Brake Warning Light" will turn on when the ignition switch is turned to the ON position and may stay on for as long as four seconds.

If the "Anti-Lock Brake Warning Light" remains on or comes on while driving, it indicates that the anti-lock portion of the brake system is not functioning and that service is required. However, the conventional brake system will continue to operate normally if the "Brake System Warning Light" is not on.

If the "Anti-Lock Brake Warning Light" is on, the brake system should be serviced as soon as possible to restore the benefits of anti-lock brakes. If the "Anti-Lock Brake

Warning Light" does not come on when the ignition switch is turned to the ON position, have the light repaired as soon as possible.

Brake Assist System (BAS)

The BAS is designed to optimize the vehicle's braking capability during emergency braking maneuvers. The system detects an emergency braking situation by sensing the rate and amount of brake application and then applies optimum pressure to the brakes. This can help reduce braking distances. The BAS complements the anti-lock brake system (ABS). Applying the brakes very quickly results in the best BAS assistance. To receive the benefit of the system, you must apply continuous braking pressure during the stopping sequence, (do not "pump" the brakes). Do not reduce brake pedal pressure unless braking is no longer desired. Once the brake pedal is released, the BAS is deactivated.

WARNING!

The Brake Assist System (BAS) cannot prevent the natural laws of physics from acting on the vehicle,

(Continued)

WARNING! ***(Continued)***

nor can it increase the traction afforded by prevailing road conditions. BAS cannot prevent collisions, including those resulting from excessive speed in turns, driving on very slippery surfaces, or hydroplaning. The capabilities of a BAS-equipped vehicle must never be exploited in a reckless or dangerous manner, which could jeopardize the user's safety or the safety of others.

Hill Start Assist (HSA)

The HSA system is designed to mitigate roll back from a complete stop while on an incline. If the driver releases the brake while stopped on an incline, HSA will continue to hold the brake pressure for a short period. If the driver does not apply the throttle before this time expires, the system will release brake pressure and the vehicle will roll down the hill as normal.

The following conditions must be met in order for HSA to activate:

- The feature must be enabled.
- The vehicle must be stopped.
- Park brake must be off.

- Driver door must be closed.
- The vehicle must be on a sufficient grade.
- The gear selection must match vehicle uphill direction (i.e., vehicle facing uphill is in forward gear; vehicle backing uphill is in REVERSE gear).
- HSA will work in REVERSE gear and all forward gears. The system will not activate if the transmission is in PARK or NEUTRAL. For vehicles equipped with a manual transmission, if the clutch is pressed, HSA will remain active.

WARNING!

There may be situations where the Hill Start Assist (HSA) will not activate and slight rolling may occur, such as on minor hills or with a loaded vehicle, or while pulling a trailer. HSA is not a substitute for active driving involvement. It is always the driver's responsibility to be attentive to distance to other vehicles, people, and objects, and most importantly brake operation to ensure safe operation of the vehicle under all road conditions. Your complete

(Continued)

WARNING! ***(Continued)***

attention is always required while driving to maintain safe control of your vehicle. Failure to follow these warnings can result in a collision or serious personal injury.

Disabling And Enabling HSA

This feature can be turned on or turned off. To change the current setting, proceed as follows:

- For vehicles equipped with the instrument cluster display, refer to "Instrument Cluster Display" in "Getting To Know Your Instrument Panel" for further information.
- If disabling HSA using Uconnect Settings, refer to "Uconnect Settings" in the "Multimedia" section for further information.

For vehicles not equipped with the instrument cluster display, perform the following steps:

1. Center the steering wheel (front wheels pointing straight forward).
2. Shift the transmission into PARK.
3. Apply the parking brake.

4. Start the engine.
5. Rotate the steering wheel slightly more than one-half turn to the left.
6. Push the "ESC Off" button located in the lower switch bank below the climate control four times within twenty seconds. The "ESC Off Indicator Light" should turn on and turn off two times.
7. Rotate the steering wheel back to center and then an additional slightly more than one-half turn to the right.
8. Turn the ignition switch to the OFF position and then back to the ON position. If the sequence was completed properly, the "ESC Off Indicator Light" will blink several times to confirm HSA is disabled.
9. Repeat these steps if you want to return this feature to its previous setting.

Traction Control System (TCS)

This system monitors the amount of wheel spin of each of the driven wheels. If wheel spin is detected, the TCS may apply brake pressure to the spinning wheel(s) and/or reduce engine power to provide enhanced acceleration and stability. A feature of the TCS, Brake Limited Differential (BLD), functions similar to a limited slip differential and controls the wheel spin across a driven axle. If one wheel on a driven axle is spinning faster than the other, the system will apply the brake of the spinning wheel. This will allow more engine torque to be applied to the wheel that is not spinning. BLD may remain enabled even if TCS and ESC are in a reduced mode.

Electronic Stability Control (ESC)

This system enhances directional control and stability of the vehicle under various driving conditions. ESC corrects for oversteering or understeering of the vehicle by applying the brake of the appropriate wheel(s) to assist in counteracting the oversteer or understeer condition. Engine power may also be reduced to help the vehicle maintain the desired path.

ESC uses sensors in the vehicle to determine the vehicle path intended by the driver and compares it to the actual path of the vehicle. When the actual path does not match the intended path, ESC applies the brake of the appropriate wheel to assist in counteracting the oversteer or understeer condition.

- Oversteer - when the vehicle is turning more than appropriate for the steering wheel position.

- Understeer - when the vehicle is turning less than appropriate for the steering wheel position.

The "ESC Activation/Malfunction Indicator Light" located in the instrument cluster will start to flash as soon as the ESC system becomes active. The "ESC Activation/Malfunction Indicator Light" also flashes when the TCS is active. If the "ESC Activation/Malfunction Indicator Light" begins to flash during acceleration, ease up on the accelerator and apply as little throttle as possible. Be sure to adapt your speed and driving to the prevailing road conditions.

NOTE: The ESC Off switch is located below the radio screen.

WARNING!

When in "Partial Off" mode, the TCS functionality of ESC, (except for the limited slip feature described in the TCS section), has been disabled and the "ESC Off Indicator Light" will be illuminated. When in "Partial Off" mode, the engine power reduction feature of TCS is disabled, and the enhanced vehicle stability offered by the ESC system is reduced.

WARNING!

- **Electronic Stability Control (ESC) cannot prevent the natural laws of physics from acting on the vehicle, nor can it increase the traction afforded by prevailing road conditions. ESC cannot prevent accidents, including those resulting from excessive speed in turns, driving on very slippery surfaces, or hydroplaning. ESC also cannot prevent accidents resulting from loss of vehicle control due to inappropriate driver input for the conditions. Only a safe, attentive, and skillful driver can prevent accidents. The capabilities of an ESC equipped vehicle must never be exploited in a reckless or dangerous manner which could jeopardize the user's safety or the safety of others.**
- **Vehicle modifications, or failure to properly maintain your vehicle, may change the handling characteristics of your vehicle, and may negatively affect the performance of the ESC system. Changes to the steering system, suspension, braking system, tire type and size or wheel size may adversely affect ESC performance. Improperly**

(Continued)

WARNING! *(Continued)*

inflated and unevenly worn tires may also degrade ESC performance. Any vehicle modification or poor vehicle maintenance that reduces the effectiveness of the ESC system can increase the risk of loss of vehicle control, vehicle rollover, personal injury and death.

Electronic Roll Mitigation (ERM)

This system anticipates the potential for wheel lift by monitoring the driver's steering wheel input and the speed of the vehicle. When ERM determines that the rate of change of the steering wheel angle and vehicle's speed are sufficient to potentially cause wheel lift, it then applies the appropriate brake and may also reduce engine power to lessen the chance that wheel lift will occur. ERM can only reduce the chance of wheel lift occurring during severe or evasive driving maneuvers; it cannot prevent wheel lift due to other factors, such as road conditions, leaving the roadway, or striking objects or other vehicles.

NOTE: ERM is disabled anytime the ESC is in "Full Off" mode (if equipped). Refer to "Electronic Stability Control (ESC)" in this section for a complete explanation of the available ESC modes.

WARNING!

Many factors, such as vehicle loading, road conditions and driving conditions, influence the chance that wheel lift or rollover may occur. ERM cannot prevent all wheel lift or roll overs, especially those that involve leaving the roadway or striking objects or other vehicles. The capabilities of an ERM-equipped vehicle must never be exploited in a reckless or dangerous manner which could jeopardize the user's safety or the safety of others.

Dynamic Steering Torque (DST)

Dynamic Steering Torque is a feature of the ESC and EPS modules that provides torque at the steering wheel for certain driving conditions in which the ESC module is detecting vehicle instability. The torque that the steering wheel receives is only meant to help the driver realize optimal steering behavior in order to reach/

maintain vehicle stability. The only notification the driver receives that the feature is active is the torque applied to the steering wheel.

NOTE: The DST feature is only meant to help the driver realize the correct course of action through small torques on the steering wheel, which means the effectiveness of the DST feature is highly dependent on the driver's sensitivity and overall reaction to the applied torque. It is very important to realize that this feature will not steer the vehicle, meaning the driver is still responsible for steering the vehicle.

OCCUPANT RESTRAINT SYSTEMS

Some of the most important safety features in your vehicle are the restraint systems:

Occupant Restraint Systems Features

- Seat Belt Systems
- Supplemental Restraint Systems (SRS) Air Bags
- Child Restraints

Some of the safety features described in this section may be standard equipment on some models, or may be optional equipment on others. If you are not sure, ask your authorized dealer.

Important Safety Precautions

Please pay close attention to the information in this section. It tells you how to use your restraint system properly, to keep you and your passengers as safe as possible.

Here are some simple steps you can take to minimize the risk of harm from a deploying air bag:

1. Children 12 years old and under should always ride buckled up in a vehicle with a rear seat.
2. If a child from 2 to 12 years old (not in a rear-facing child restraint) must ride in the front passenger seat, move the seat as far back as possible and use the proper child restraint (refer to "Child Restraints" in this section for further information).
3. Children that are not big enough to wear the vehicle seat belt properly (refer to "Child Restraints" in this section for further information) should be secured in a vehicle with a rear seat in child restraints or belt-positioning booster seats. Older children who do not use child restraints or belt-positioning booster seats should ride properly buckled up in a vehicle with a rear seat.

4. Never allow children to slide the shoulder belt behind them or under their arm.
5. You should read the instructions provided with your child restraint to make sure that you are using it properly.
6. All occupants should always wear their lap and shoulder belts properly.
7. The driver and front passenger seats should be moved back as far as practical to allow the front air bags room to inflate.
8. Do not lean against the door or window. If your vehicle has side air bags, and deployment occurs, the side air bags will inflate forcefully into the space between occupants and the door and occupants could be injured.
9. If the air bag system in this vehicle needs to be modified to accommodate a disabled person, refer to the "Customer Assistance" section for customer service contact information.

WARNING!

- **Never place a rear-facing child restraint in front of an air bag. A deploying passenger front air bag can cause death or serious injury to a child 12 years or younger, including a child in a rear-facing child restraint.**
- **Only use a rear-facing child restraint in a vehicle with a rear seat.**

Seat Belt Systems

Buckle up even though you are an excellent driver, even on short trips. Someone on the road may be a poor driver and could cause a collision that includes you. This can happen far away from home or on your own street.

Research has shown that seat belts save lives, and they can reduce the seriousness of injuries in a collision. Some of the worst injuries happen when people are thrown from the vehicle. Seat belts reduce the possibility of ejection and the risk of injury caused by striking the inside of the vehicle. Everyone in a motor vehicle should be belted at all times.

Enhanced Seat Belt Use Reminder System (BeltAlert)

Driver And Passenger BeltAlert — If Equipped

BeltAlert is a feature intended to remind the driver and outboard front seat passenger (if equipped with outboard front passenger seat BeltAlert) to buckle their seat belts. The Belt Alert feature is active whenever the ignition switch is in the START or ON/RUN position.

Initial Indication

If the driver is unbuckled when the ignition switch is first in the START or ON/RUN position, a chime will signal for a few seconds. If the driver or outboard front seat passenger (if equipped with outboard front passenger seat BeltAlert) is unbuckled when the ignition switch is first in the START or ON/RUN position the Seat Belt Reminder Light will turn on and remain on until both outboard front seat belts are buckled. The outboard front passenger seat BeltAlert is not active when an outboard front passenger seat is unoccupied.

BeltAlert Warning Sequence

The BeltAlert warning sequence is activated when the vehicle is moving above a specified vehicle speed range and the driver or outboard front seat passenger is unbuckled (if equipped with outboard front passenger seat BeltAlert) (the outboard front passenger seat BeltAlert is not active when the outboard front passenger seat is unoccupied). The BeltAlert warning sequence starts by blinking the Seat Belt Reminder Light and sounding an intermittent chime. Once the BeltAlert warning sequence has completed, the Seat Belt Reminder Light will remain on until the seat belts are buckled. The BeltAlert warning sequence may repeat based on vehicle speed until the driver and occupied outboard front seat passenger seat belts are buckled. The driver should instruct all occupants to buckle their seat belts.

Change Of Status

If the driver or outboard front seat passenger (if equipped with outboard front passenger seat BeltAlert) unbuckles their seat belt while the vehicle is traveling, the BeltAlert warning sequence will begin until the seat belts are buckled again.

The outboard front passenger seat BeltAlert is not active when the outboard front passenger seat is unoccupied. BeltAlert may be triggered when an animal or other items are placed on the outboard front passenger seat or

when the seat is folded flat (if equipped). It is recommended that pets be restrained in the rear seat (if equipped) in pet harnesses or pet carriers that are secured by seat belts, and cargo is properly stowed.

BeltAlert can be activated or deactivated by your authorized dealer. FCA US LLC does not recommend deactivating BeltAlert.

NOTE: If BeltAlert has been deactivated and the driver or outboard front seat passenger (if equipped with outboard front passenger seat BeltAlert) is unbuckled the Seat Belt Reminder Light will turn on and remain on until the driver and outboard front seat passenger seat belts are buckled.

Lap/Shoulder Belts

All seating positions in your vehicle are equipped with lap/shoulder belts.

The seat belt webbing retractor will lock only during very sudden stops or collisions. This feature allows the shoulder part of the seat belt to move freely with you under normal conditions. However, in a collision the seat belt will lock and reduce your risk of striking the inside of the vehicle or being thrown out of the vehicle.

WARNING!

- **Relying on the air bags alone could lead to more severe injuries in a collision. The air bags work with your seat belt to restrain you properly. In some collisions, the air bags won't deploy at all. Always wear your seat belt even though you have air bags.**
- **In a collision, you and your passengers can suffer much greater injuries if you are not properly buckled up. You can strike the interior of your vehicle or other passengers, or you can be thrown out of the vehicle. Always be sure you and others in your vehicle are buckled up properly.**
- **It is dangerous to ride in a cargo area, inside or outside of a vehicle. In a collision, people riding in these areas are more likely to be seriously injured or killed.**
- **Do not allow people to ride in any area of your vehicle that is not equipped with seats and seat belts.**
- **Be sure everyone in your vehicle is in a seat and using a seat belt properly. Occupants, including the driver, should always wear their seat belts**

(Continued)

WARNING! *(Continued)*

whether or not an air bag is also provided at their seating position to minimize the risk of severe injury or death in the event of a crash.

- Wearing your seat belt incorrectly could make your injuries in a collision much worse. You might suffer internal injuries, or you could even slide out of the seat belt. Follow these instructions to wear your seat belt safely and to keep your passengers safe, too.
- Two people should never be belted into a single seat belt. People belted together can crash into one another in a collision, hurting one another badly. Never use a lap/shoulder belt or a lap belt for more than one person, no matter what their size.

WARNING!

- A lap belt worn too high can increase the risk of injury in a collision. The seat belt forces won't be at the strong hip and pelvic bones, but across your abdomen. Always wear the lap part of your seat

(Continued)

WARNING! *(Continued)*

belt as low as possible and keep it snug.

- A twisted seat belt may not protect you properly. In a collision, it could even cut into you. Be sure the seat belt is flat against your body, without twists. If you can't straighten a seat belt in your vehicle, take it to your authorized dealer immediately and have it fixed.
- A seat belt that is buckled into the wrong buckle will not protect you properly. The lap portion could ride too high on your body, possibly causing internal injuries. Always buckle your seat belt into the buckle nearest you.
- A seat belt that is too loose will not protect you properly. In a sudden stop, you could move too far forward, increasing the possibility of injury. Wear your seat belt snugly.
- A seat belt that is worn under your arm is dangerous. Your body could strike the inside surfaces of the vehicle in a collision, increasing head and neck injury. A seat belt worn under the arm can cause internal injuries. Ribs aren't as strong as shoulder bones. Wear the seat belt over your

(Continued)

WARNING! ***(Continued)***

shoulder so that your strongest bones will take the force in a collision.

- **A shoulder belt placed behind you will not protect you from injury during a collision. You are more likely to hit your head in a collision if you do not wear your shoulder belt. The lap and shoulder belt are meant to be used together.**
- **A frayed or torn seat belt could rip apart in a collision and leave you with no protection. Inspect the seat belt system periodically, checking for cuts, frays, or loose parts. Damaged parts must be replaced immediately. Do not disassemble or modify the seat belt system. Seat belt assemblies must be replaced after a collision.**

Lap/Shoulder Belt Operating Instructions

1. Enter the vehicle and close the door. Sit back and adjust the seat.
2. The seat belt latch plate is above the back of the front seat, and next to your arm in the rear seat (for vehicles equipped with a rear seat). Grasp the latch plate and pull out the seat belt. Slide the latch plate up the webbing as far as necessary to allow the seat belt to go around your lap.

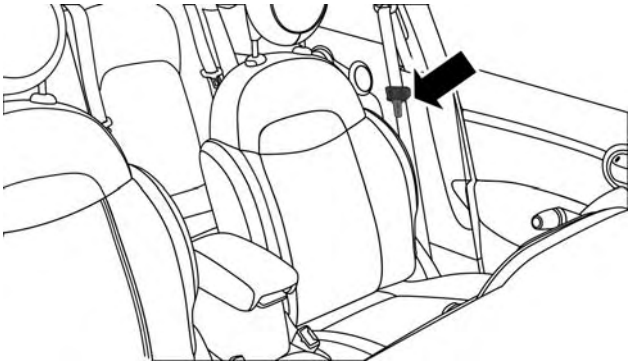

Pulling Out The Latch Plate

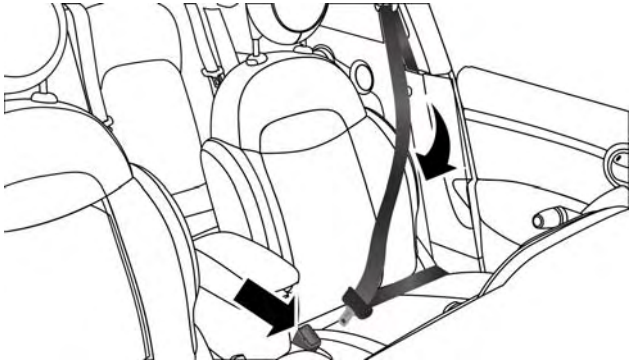

Inserting Latch Plate Into Buckle

3. When the seat belt is long enough to fit, insert the latch plate into the buckle until you hear a “click.”

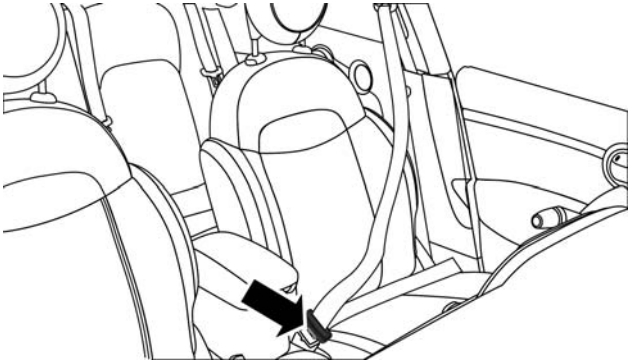

Positioning The Lap Belt

4. Position the lap belt so that it is snug and lies low across your hips, below your abdomen. To remove slack in the lap belt portion, pull up on the shoulder belt. To loosen the lap belt if it is too tight, tilt the latch plate and pull on the lap belt. A snug seat belt reduces the risk of sliding under the seat belt in a collision.

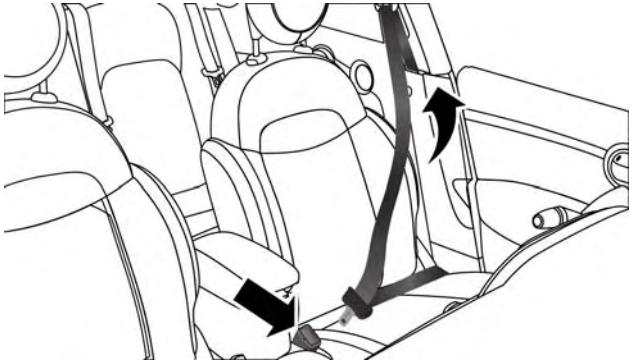

Releasing The Seat Belt

5. Position the shoulder belt across the shoulder and chest with minimal, if any slack so that it is comfortable and not resting on your neck. The retractor will withdraw any slack in the shoulder belt.

6. To release the seat belt, push the red button on the buckle. The seat belt will automatically retract to its stowed position. If necessary, slide the latch plate down the webbing to allow the seat belt to retract fully.

Lap/Shoulder Belt Untwisting Procedure

Use the following procedure to untwist a twisted lap/shoulder belt.

1. Position the latch plate as close as possible to the anchor point.

2. At about 6 to 12 in (15 to 30 cm) above the latch plate, grasp and twist the seat belt webbing 180 degrees to create a fold that begins immediately above the latch plate.

3. Slide the latch plate upward over the folded webbing. The folded webbing must enter the slot at the top of the latch plate.

4. Continue to slide the latch plate up until it clears the folded webbing and the seat belt is no longer twisted.

Adjustable Upper Shoulder Belt Anchorage

In the driver and front passenger seats, the top of the shoulder belt can be adjusted upward or downward to position the seat belt away from your neck. Push or squeeze the anchorage button to release the anchorage, and move it up or down to the position that serves you best.

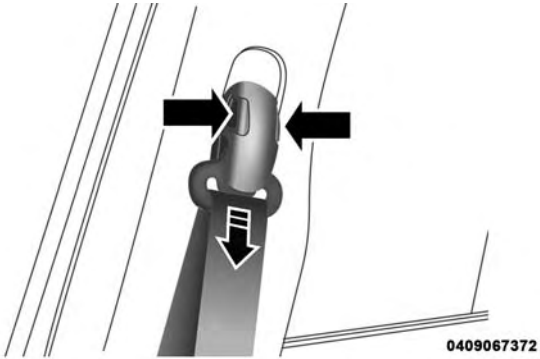

Adjustable Anchorage Up

As a guide, if you are shorter than average, you will prefer the shoulder belt anchorage in a lower position, and if you are taller than average, you will prefer the shoulder belt anchorage in a higher position. After you release the anchorage button, try to move it up or down to make sure that it is locked in position.

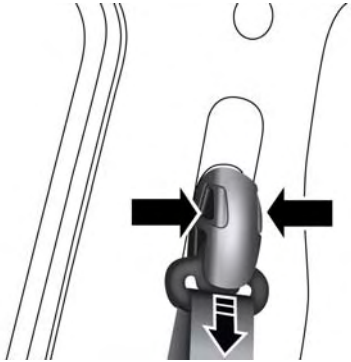

Adjustable Anchorage Down

NOTE: The adjustable upper shoulder belt anchorage is equipped with an Easy Up feature. This feature allows the shoulder belt anchorage to be adjusted in the upward position without pushing or squeezing the release button. To verify the shoulder belt anchorage is latched, pull downward on the shoulder belt anchorage until it is locked into position.

WARNING!

- **Wearing your seat belt incorrectly could make your injuries in a collision much worse. You might suffer internal injuries, or you could even slide out of the seat belt. Follow these instructions to wear your seat belt safely and to keep your passengers safe, too.**
- **Position the shoulder belt across the shoulder and chest with minimal, if any slack so that it is comfortable and not resting on your neck. The retractor will withdraw any slack in the shoulder belt.**
- **Misadjustment of the seat belt could reduce the effectiveness of the safety belt in a crash.**

Seat Belts And Pregnant Women

Pregnant Women And Seat Belts

Seat belts must be worn by all occupants including pregnant women: the risk of injury in the event of an accident is reduced for the mother and the unborn child if they are wearing a seat belt.

Position the lap belt snug and low below the abdomen and across the strong bones of the hips. Place the shoulder belt across the chest and away from the neck. Never place the shoulder belt behind the back or under the arm.

Seat Belt Pretensioner

The front seat belt system is equipped with pretensioning devices that are designed to remove slack from the seat belt in the event of a collision. These devices may improve the performance of the seat belt by removing slack from the seat belt early in a collision. Pretensioners work for all size occupants, including those in child restraints.

NOTE: These devices are not a substitute for proper seat belt placement by the occupant. The seat belt still must be worn snugly and positioned properly.

The pretensioners are triggered by the Occupant Restraint Controller (ORC). Like the air bags, the pretensioners are single use items. A deployed pretensioner or a deployed air bag must be replaced immediately.

Energy Management Feature

This vehicle has a seat belt system with an Energy Management feature in the front seating positions that may help further reduce the risk of injury in the event of a collision. The seat belt system has a retractor assembly that is designed to release webbing in a controlled manner.

Switchable Automatic Locking Retractors (ALR)

The seat belts in the passenger seating positions are equipped with a Switchable Automatic Locking Retractor (ALR) which is used to secure a child restraint system. For additional information, refer to “Installing Child Restraints Using The Vehicle Seat Belt” under the “Child Restraints” section of this manual. The figure below illustrates the locking feature for each seating position.

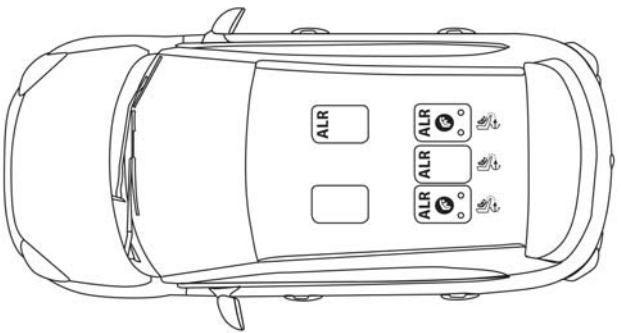

ALR = Switchable Automatic Locking Retractor

If the passenger seating position is equipped with an ALR and is being used for normal usage, only pull the seat belt webbing out far enough to comfortably wrap around the occupant’s mid-section so as to not activate

the ALR. If the ALR is activated, you will hear a clicking sound as the seat belt retracts. Allow the webbing to retract completely in this case and then carefully pull out only the amount of webbing necessary to comfortably wrap around the occupant's mid-section. Slide the latch plate into the buckle until you hear a "click."

In Automatic Locking Mode, the shoulder belt is automatically pre-locked. The seat belt will still retract to remove any slack in the shoulder belt. Use the Automatic Locking Mode anytime a child restraint is installed in a seating position that has a seat belt with this feature. Children 12 years old and under should always be properly restrained in a vehicle with a rear seat.

WARNING!

- **Never place a rear-facing child restraint in front of an air bag. A deploying passenger front air bag can cause death or serious injury to a child 12 years or younger, including a child in a rear-facing child restraint.**
- **Only use a rear-facing child restraint in a vehicle with a rear seat.**

How To Engage The Automatic Locking Mode

1. Buckle the combination lap and shoulder belt.
2. Grasp the shoulder portion and pull downward until the entire seat belt is extracted.
3. Allow the seat belt to retract. As the seat belt retracts, you will hear a clicking sound. This indicates the seat belt is now in the Automatic Locking Mode.

How To Disengage The Automatic Locking Mode

Unbuckle the combination lap/shoulder belt and allow it to retract completely to disengage the Automatic Locking Mode and activate the vehicle sensitive (emergency) locking mode.

WARNING!

- **The seat belt assembly must be replaced if the switchable Automatic Locking Retractor (ALR) feature or any other seat belt function is not working properly when checked according to the procedures in the Service Manual.**
- **Failure to replace the seat belt assembly could increase the risk of injury in collisions.**

(Continued)

WARNING! *(Continued)*

- **Do not use the Automatic Locking Mode to restrain occupants who are wearing the seat belt or children who are using booster seats. The locked mode is only used to install rear-facing or forward-facing child restraints that have a harness for restraining the child.**

Supplemental Restraint Systems (SRS)

Some of the safety features described in this section may be standard equipment on some models, or may be optional equipment on others. If you are not sure, ask your authorized dealer.

The air bag system must be ready to protect you in a collision. The Occupant Restraint Controller (ORC) monitors the internal circuits and interconnecting wiring associated with the electrical Air Bag System Components. Your vehicle may be equipped with the following Air Bag System Components:

Air Bag System Components

- Occupant Restraint Controller (ORC)
- Air Bag Warning Light
- Steering Wheel and Column
- Instrument Panel
- Knee Impact Bolsters
- Driver and Front Passenger Air Bags
- Supplemental Side Air Bags
- Supplemental Knee Air Bags
- Front and Side Impact Sensors
- Seat Belt Pretensioners
- Seat Track Position Sensors
- Seat Belt Buckle Switch

Air Bag Warning Light

The ORC monitors the readiness of the electronic parts of the air bag system whenever the ignition switch is in the START or ACC/ON/RUN position. If the ignition switch is in the STOP/OFF/LOCK position or in the ACC position, the air bag system is not on and the air bags will not inflate.

The ORC contains a backup power supply system that may deploy the air bag system even if the battery loses power or it becomes disconnected prior to deployment.

The ORC turns on the Air Bag Warning Light in the instrument panel for approximately four to eight seconds for a self-check when the ignition switch is in the ACC/ON/RUN position. After the self-check, the Air Bag Warning Light will turn off. If the ORC detects a malfunction in any part of the system, it turns on the Air Bag Warning Light, either momentarily or continuously. A single chime will sound to alert you if the light comes on again after initial startup.

The ORC also includes diagnostics that will illuminate the instrument panel Air Bag Warning Light if a malfunction is detected that could affect the air bag system. The diagnostics also record the nature of the malfunction. While the air bag system is designed to be maintenance free, if any of the following occurs, have an authorized dealer service the air bag system immediately.

- The Air Bag Warning Light does not come on during the four to eight seconds when the ignition switch is first in the ACC/ON/RUN position.
- The Air Bag Warning Light remains on after the four to eight-second interval.
- The Air Bag Warning Light comes on intermittently or remains on while driving.

NOTE: If the speedometer, tachometer, or any engine related gauges are not working, the Occupant Restraint Controller (ORC) may also be disabled. In this condition the air bags may not be ready to inflate for your protection. Have an authorized dealer service the air bag system immediately.

WARNING!

Ignoring the Air Bag Warning Light in your instrument panel could mean you won't have the air bags to protect you in a collision. If the light does not come on as a bulb check when the ignition is first turned on, stays on after you start the vehicle, or if it comes on as you drive, have an authorized dealer service the air bag system immediately.

Redundant Air Bag Warning Light

If a fault with the Air Bag Warning Light is detected, which could affect the Supplemental Restraint System (SRS), the Redundant Air Bag Warning Light will illuminate on the instrument panel. The Redundant Air Bag Warning Light will stay on until the fault is cleared. In addition, a single chime will sound to alert you that the Redundant Air Bag Warning Light has come on and a fault has been detected. If the Redundant Air Bag Warning Light comes on intermittently or remains on while driving have an authorized dealer service the vehicle immediately. For additional information regarding the Redundant Air Bag Warning Light, refer to "Warning/Indicator Lights And Messages" in "Getting to Know Your Instrument Panel" section of this manual.

Front Air Bags

This vehicle has front air bags and lap/shoulder belts for both the driver and front passenger. The front air bags are a supplement to the seat belt restraint systems. The driver front air bag is mounted in the center of the steering wheel. The passenger front air bag is mounted in the instrument panel, above the glove compartment. The words "SRS AIRBAG" or "AIRBAG" are embossed on the air bag covers.

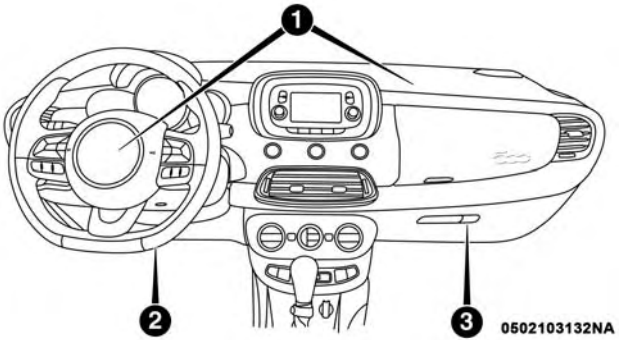

Front Air Bag Locations

1 — Driver And Passenger Front Air Bags
2 — Driver Knee Impact Bolster/Supplemental Driver Knee Air Bag
3 — Passenger Knee Impact Bolster

WARNING!

- **Being too close to the steering wheel or instrument panel during front air bag deployment could cause serious injury, including death. Air bags need room to inflate. Sit back, comfortably extending your arms to reach the steering wheel or instrument panel.**
- **Never place a rear-facing child restraint in front of an air bag. A deploying passenger front air bag can cause death or serious injury to a child 12 years or younger, including a child in a rear-facing child restraint.**
- **Only use a rear-facing child restraint in a vehicle with a rear seat.**

Driver And Passenger Front Air Bag Features

The Advanced Front Air Bag system has multistage driver and front passenger air bags. This system provides output appropriate to the severity and type of collision as determined by the Occupant Restraint Controller (ORC), which may receive information from the front impact sensors (if equipped) or other system components.

The first stage inflator is triggered immediately during an impact that requires air bag deployment. A low energy output is used in less severe collisions. A higher energy output is used for more severe collisions.

This vehicle may be equipped with a driver and/or front passenger seat belt buckle switch that detects whether the driver or front passenger seat belt is buckled. The seat belt buckle switch may adjust the inflation rate of the Advanced Front Air Bags.

This vehicle may be equipped with driver and/or front passenger seat track position sensors that may adjust the inflation rate of the Advanced Front Air Bags based upon seat position.

WARNING!

- **No objects should be placed over or near the air bag on the instrument panel or steering wheel because any such objects could cause harm if the vehicle is in a collision severe enough to cause the air bag to inflate.**
- **Do not put anything on or around the air bag covers or attempt to open them manually. You**

(Continued)

WARNING! ***(Continued)***

may damage the air bags and you could be injured because the air bags may no longer be functional. The protective covers for the air bag cushions are designed to open only when the air bags are inflating.

- **Relying on the air bags alone could lead to more severe injuries in a collision. The air bags work with your seat belt to restrain you properly. In some collisions, air bags won't deploy at all. Always wear your seat belts even though you have air bags.**

Front Air Bag Operation

Front Air Bags are designed to provide additional protection by supplementing the seat belts. Front air bags are not expected to reduce the risk of injury in rear, side, or rollover collisions. The front air bags will not deploy in all frontal collisions, including some that may produce substantial vehicle damage — for example, some pole collisions, truck underrides, and angle offset collisions.

On the other hand, depending on the type and location of impact, front air bags may deploy in crashes with little vehicle front-end damage but that produce a severe initial deceleration.

Because air bag sensors measure vehicle deceleration over time, vehicle speed and damage by themselves are not good indicators of whether or not an air bag should have deployed.

Seat belts are necessary for your protection in all collisions, and also are needed to help keep you in position, away from an inflating air bag.

When the ORC detects a collision requiring the front air bags, it signals the inflator units. A large quantity of non-toxic gas is generated to inflate the front air bags.

The steering wheel hub trim cover and the upper right side of the instrument panel separate and fold out of the way as the air bags inflate to their full size. The front air bags fully inflate in less time than it takes to blink your eyes. The front air bags then quickly deflate while helping to restrain the driver and front passenger.

Knee Impact Bolsters

The Knee Impact Bolsters help protect the knees of the driver and front passenger, and position the front occupants for improved interaction with the front air bags.

WARNING!

- **Do not drill, cut, or tamper with the knee impact bolsters in any way.**
- **Do not mount any accessories to the knee impact bolsters such as alarm lights, stereos, citizen band radios, etc.**

Supplemental Driver Knee Air Bag

This vehicle is equipped with a Supplemental Driver Knee Air Bag mounted in the instrument panel below the steering column. The Supplemental Driver Knee Air Bag provides enhanced protection during a frontal impact by working together with the seat belts, pretensioners, and front air bags.

Supplemental Side Air Bags

Your vehicle is equipped with two types of side air bags:

1. Supplemental Seat-Mounted Side Air Bags (SABs): Located in the outboard side of the front seats. The SABs are marked with a “SRS AIRBAG” or “AIRBAG” label sewn into the outboard side of the seats.

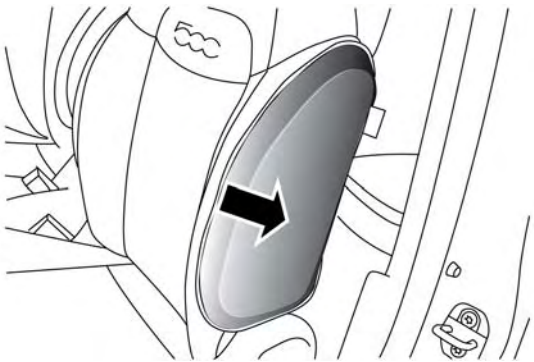

Front Supplemental Seat-Mounted Side Air Bag

The SABs may help to reduce the risk of occupant injury during certain side impacts and/or vehicle rollover events, in addition to the injury reduction potential provided by the seat belts and body structure.

When the SAB deploys, it opens the seam on the outboard side of the seatback's trim cover. The inflating SAB deploys through the seat seam into the space between the occupant and the door. The SAB moves at a very high speed and with such a high force that it could injure occupants if they are not seated properly, or if items are positioned in the area where the SAB inflates. Children are at an even greater risk of injury from a deploying air bag.

WARNING!

Do not use accessory seat covers or place objects between you and the Side Air Bags; the performance could be adversely affected and/or objects could be pushed into you, causing serious injury.

2. Supplemental Side Air Bag Inflatable Curtains (SABICs): Located above the side windows. The trim covering the SABICs is labeled "SRS AIRBAG" or "AIRBAG."

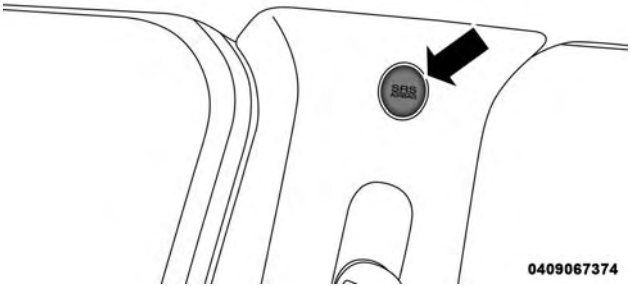

Supplemental Side Air Bag Inflatable Curtain (SABIC) Label Location

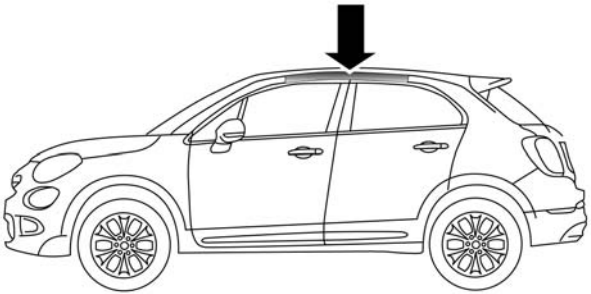

Supplemental Side Air Bag Inflatable Curtain (SABIC)

SABICs may help reduce the risk of head or other injuries to front and rear seat outboard occupants in certain side impacts and/or vehicle rollover events, in addition to the injury reduction potential provided by the seat belts and body structure.

The SABICs deploy downward, covering the side windows. An inflating SABIC pushes the outside edge of the trim out of the way and covers the window. The SABICs inflate with enough force to injure occupants if they are not belted and seated properly, or if items are positioned in the area where the SABICs inflate. Children are at an even greater risk of injury from a deploying air bag.

WARNING!

- **Do not stack luggage or other cargo up high enough to block the deployment of the SABICs. The trim covering above the side windows where the SABIC and its deployment path are located should remain free from any obstructions.**
- **In order for the SABICs to work as intended, do not install any accessory items in your vehicle which could alter the roof. Do not add an after-market sunroof to your vehicle. Do not add roof racks that require permanent attachments (bolts or screws) for installation on the vehicle roof. Do not drill into the roof of the vehicle for any reason.**

The SABICs and SABs (Side Air Bags) are designed to activate in certain side impacts and certain rollover events. The Occupant Restraint Controller (ORC) determines whether the deployment of the Side Air Bags in a particular side impact or rollover event is appropriate, based on the severity and type of collision. Vehicle

damage by itself is not a good indicator of whether or not Side Air Bags should have deployed.

Side Air Bags are a supplement to the seat belt restraint system. Side Air Bags deploy in less time than it takes to blink your eyes.

WARNING!

- **Occupants, including children, who are up against or very close to Side Air Bags can be seriously injured or killed. Occupants, including children, should never lean on or sleep against the door, side windows, or area where the side air bags inflate, even if they are in an infant or child restraint.**
- **Seat belts (and child restraints where appropriate) are necessary for your protection in all collisions. They also help keep you in position, away from an inflating Side Air Bag. To get the best protection from the Side Air Bags, occupants must wear their seat belts properly and sit upright with their backs against the seats. Children must be properly restrained in a child restraint or booster seat that is appropriate for the size of the child.**

WARNING!

- **Side Air Bags need room to inflate. Do not lean against the door or window. Sit upright in the center of the seat.**
- **Being too close to the Side Air Bags during deployment could cause you to be severely injured or killed.**
- **Relying on the Side Air Bags alone could lead to more severe injuries in a collision. The Side Air Bags work with your seat belt to restrain you properly. In some collisions, Side Air Bags won't deploy at all. Always wear your seat belt even though you have Side Air Bags.**

NOTE: Air bag covers may not be obvious in the interior trim, but they will open during air bag deployment.

Side Impacts

In side impacts, the side impact sensors aid the ORC in determining the appropriate response to impact events. The system is calibrated to deploy the Side Air Bags on the impact side of the vehicle during impacts that require Side Air Bag occupant protection. In side impacts, the Side Air Bags deploy independently; a left

side impact deploys the left Side Air Bags only and a right side impact deploys the right Side Air Bags only.

The Side Air Bags will not deploy in all side collisions, including some collisions at certain angles, or some side collisions that do not impact the area of the passenger compartment. The Side Air Bags may deploy during angled or offset frontal collisions where the front air bags deploy.

Rollover Events

Side Air Bags are designed to activate in certain rollover events. The ORC determines whether the deployment of the Side Air Bags in a particular rollover event is appropriate, based on the severity and type of collision. Vehicle damage by itself is not a good indicator of whether or not Side Air Bags should have deployed.

The Side Air Bags will not deploy in all rollover events. The rollover sensing system determines if a rollover event may be in progress and whether deployment is appropriate. In the event the vehicle experiences a rollover or near rollover event, and deployment of the Side Air Bags is appropriate, the rollover sensing system will also deploy the seat belt pretensioners on both sides of the vehicle.

The SABICs may help reduce the risk of partial or complete ejection of vehicle occupants through side windows in certain rollover or side impact events.

The Occupant Restraint Controller (ORC) monitors the internal circuits and interconnecting wiring associated with electrical Air Bag System Components listed below:

Air Bag System Components

- Occupant Restraint Controller (ORC)
- Air Bag Warning Light
- Steering Wheel and Column
- Instrument Panel
- Knee Impact Bolsters
- Driver and Front Passenger Air Bags
- Supplemental Side Air Bags
- Supplemental Knee Air Bags
- Front and Side Impact Sensors
- Seat Belt Pretensioners
- Seat Track Position Sensors
- Seat Belt Buckle Switch

If A Deployment Occurs

The front air bags are designed to deflate immediately after deployment.

NOTE: Front and/or side air bags will not deploy in all collisions. This does not mean something is wrong with the air bag system.

If you do have a collision which deploys the air bags, any or all of the following may occur:

- The air bag material may sometimes cause abrasions and/or skin reddening to the occupants as the air bags deploy and unfold. The abrasions are similar to friction rope burns or those you might get sliding along a carpet or gymnasium floor. They are not caused by contact with chemicals. They are not permanent and normally heal quickly. However, if you haven't healed significantly within a few days, or if you have any blistering, see your doctor immediately.
- As the air bags deflate, you may see some smoke-like particles. The particles are a normal by-product of the process that generates the non-toxic gas used for air bag inflation. These airborne particles may irritate the skin, eyes, nose, or throat. If you have skin or eye irritation, rinse the area with cool water. For nose or throat irritation, move to fresh air. If the irritation continues, see your doctor. If these particles settle on your clothing, follow the garment manufacturer's instructions for cleaning.

Do not drive your vehicle after the air bags have deployed. If you are involved in another collision, the air bags will not be in place to protect you.

WARNING!

Deployed air bags and seat belt pretensioners cannot protect you in another collision. Have the air bags, seat belt pretensioners, and the seat belt retractor assemblies replaced by an authorized dealer immediately. Also, have the Occupant Restraint Controller System serviced as well.

NOTE:

- Air bag covers may not be obvious in the interior trim, but they will open during air bag deployment.
- After any collision, the vehicle should be taken to an authorized dealer immediately.

Enhanced Accident Response System

In the event of an impact, if the communication network remains intact, and the power remains intact, depending on the nature of the event, the ORC will determine whether to have the Enhanced Accident Response System perform the following functions:

- Cut off fuel to the engine.
- Flash hazard lights as long as the battery has power or until the hazard light button is pressed. The hazard lights can be deactivated by pressing the hazard light button.
- Turn on the interior lights, which remain on as long as the battery has power or for 15 minutes from the intervention of the Enhanced Accident Response System.
- Unlock the power door locks.
- Turn off the Fuel Pump Heater (if equipped).
- Turn off the HVAC Blower Motor.
- Close the HVAC Circulation Door.

Enhanced Accident Response System Reset Procedure

After the event occurs, when the system is active, a message regarding fuel cutoff is displayed. Turn the ignition switch from ignition AVV/START or MAR/ACC/ON/RUN to ignition STOP/OFF/LOCK. Carefully check the vehicle for fuel leaks in the engine compartment and on the ground near the engine compartment and fuel tank before resetting the system and starting the engine.

Depending on the nature of the event the left and right turn signal lights, located in the instrument panel, may both be blinking and will continue to blink. In order to move your vehicle to the side of the road, you must follow the system reset procedure.

Customer Action	Customer Will See
NOTE: Each step MUST BE held for at least two seconds	
1. Turn ignition STOP/OFF/LOCK. (Turn Signal Must be placed in Neutral State).	
2. Turn ignition MAR/ACC/ON/RUN.	Right turn light BLINKS. Left turn light is OFF.
3. Turn right turn signal switch ON.	Right turn light is ON SOLID. Left turn light BLINKS.
4. Place turn signal in neutral state.	Right turn light is OFF. Left turn light BLINKS.
5. Turn left turn signal switch ON.	Right turn light BLINKS. Left turn light is ON SOLID.
6. Place turn signal in neutral state.	Right turn light BLINKS. Left turn light is OFF.
7. Turn right turn signal switch ON.	Right turn light is ON SOLID. Left turn light BLINKS.

Customer Action	Customer Will See
NOTE: Each step MUST BE held for at least two seconds	
8. Place turn signal in neutral state.	Right turn light is OFF. Left turn light BLINKS
9. Turn left turn signal switch ON.	Right turn light is ON SOLID. Left turn light is ON SOLID.
10. Turn left turn signal switch OFF. (Turn Signal Switch Must be placed in Neutral State).	Right turn light is OFF. Left turn light is OFF.
11. Turn ignition STOP/OFF/LOCK.	
12. Turn ignition MAR/ACC/ON/RUN. (Entire sequence needs to be completed within one minute or sequence will need to be repeated).	System is now reset and the engine may be started.
Turn hazard flashers OFF (Manually)	

If a reset procedure step is not completed within 60 seconds, then the turn signal lights will blink and the reset procedure must be performed again in order to be successful.

Maintaining Your Air Bag System

WARNING!

- **Modifications to any part of the air bag system could cause it to fail when you need it. You could be injured if the air bag system is not there to protect you. Do not modify the components or wiring, including adding any kind of badges or stickers to the steering wheel hub trim cover or the upper right side of the instrument panel. Do not modify the front bumper, vehicle body structure, or add aftermarket side steps or running boards.**
- **It is dangerous to try to repair any part of the air bag system yourself. Be sure to tell anyone who works on your vehicle that it has an air bag system.**
- **Do not attempt to modify any part of your air bag system. The air bag may inflate accidentally or**

(Continued)

WARNING! ***(Continued)***

may not function properly if modifications are made. Take your vehicle to an authorized dealer for any air bag system service. If your seat, including your trim cover and cushion, needs to be serviced in any way (including removal or loosening/tightening of seat attachment bolts), take the vehicle to your authorized dealer. Only manufacturer approved seat accessories may be used. If it is necessary to modify the air bag system for persons with disabilities, contact your authorized dealer.

Event Data Recorder (EDR)

This vehicle is equipped with an event data recorder (EDR). The main purpose of an EDR is to record, in certain crash or near crash-like situations, such as an air bag deployment or hitting a road obstacle, data that will assist in understanding how a vehicle's systems performed. The EDR is designed to record data related to vehicle dynamics and safety systems for a short period of time, typically 30 seconds or less. The EDR in this vehicle is designed to record such data as:

- How various systems in your vehicle were operating;

- Whether or not the driver and passenger safety belts were buckled/fastened;
- How far (if at all) the driver was depressing the accelerator and/or brake pedal; and,
- How fast the vehicle was traveling.
- These data can help provide a better understanding of the circumstances in which crashes and injuries occur.

NOTE: EDR data are recorded by your vehicle only if a non-trivial crash situation occurs; no data are recorded by the EDR under normal driving conditions and no personal data (e.g., name, gender, age, and crash location) are recorded. However, other parties, such as law enforcement, could combine the EDR data with the type of personally identifying data routinely acquired during a crash investigation.

To read data recorded by an EDR, special equipment is required, and access to the vehicle or the EDR is needed. In addition to the vehicle manufacturer, other parties, such as law enforcement, that have the special equipment, can read the information if they have access to the vehicle or the EDR.

Child Restraints

Everyone in your vehicle needs to be buckled up at all times, including babies and children. Every state in the United States, and every Canadian province, requires that small children ride in proper restraint systems. This is the law, and you can be prosecuted for ignoring it.

Children 12 years or younger should ride properly buckled up in a rear seat, if available. According to crash statistics, children are safer when properly restrained in the rear seats rather than in the front.

WARNING!

In a collision, an unrestrained child can become a projectile inside the vehicle. The force required to hold even an infant on your lap could become so great that you could not hold the child, no matter how strong you are. The child and others could be badly injured. Any child riding in your vehicle should be in a proper restraint for the child's size.

There are different sizes and types of restraints for children from newborn size to the child almost large enough for an adult safety belt. Always check the child seat Owner's Manual to make sure you have the correct seat for your child. Carefully read and follow all the instructions and warnings in the child restraint Owner's Manual and on all the labels attached to the child restraint.

Before buying any restraint system, make sure that it has a label certifying that it meets all applicable Safety Standards. You should also make sure that you can install it in the vehicle where you will use it.

NOTE:

- For additional information, refer to www.safercar.gov/parents/index.htm or call: 1–888–327–4236
- Canadian residents should refer to Transport Canada's website for additional information: http://www.tc.gc.ca/eng/motorvehiclesafety/safedriverschildsafety-index-53.htm

Summary Of Recommendations For Restraining Children In Vehicles

	Child Size, Height, Weight Or Age	Recommended Type Of Child Restraint
Infants and Toddlers	Children who are two years old or younger and who have not reached the height or weight limits of their child restraint	Either an Infant Carrier or a Convertible Child Restraint, facing rearward in the rear seat of the vehicle
Small Children	Children who are at least two years old or who have out-grown the height or weight limit of their rear-facing child restraint	Forward-Facing Child Restraint with a five-point Harness, facing forward in the rear seat of the vehicle
Larger Children	Children who have out-grown their forward-facing child restraint, but are too small to properly fit the vehicle's seat belt	Belt Positioning Booster Seat and the vehicle seat belt, seated in the rear seat of the vehicle
Children Too Large for Child Restraints	Children 12 years old or younger, who have out-grown the height or weight limit of their booster seat	Vehicle Seat Belt, seated in the rear seat of the vehicle

Infant And Child Restraints

Safety experts recommend that children ride rear-facing in the vehicle until they are two years old or until they reach either the height or weight limit of their rear-facing child restraint. Two types of child restraints can be used rear-facing: infant carriers and convertible child seats.

The infant carrier is only used rear-facing in the vehicle. It is recommended for children from birth until they reach the weight or height limit of the infant carrier. Convertible child seats can be used either rear-facing or forward-facing in the vehicle. Convertible child seats often have a higher weight limit in the rear-facing direction than infant carriers do, so they can be used rear-facing by children who have outgrown their infant carrier but are still less than at least two years old. Children should remain rear-facing until they reach the highest weight or height allowed by their convertible child seat.

WARNING!

- **Never place a rear-facing child restraint in front of an air bag. A deploying passenger front air bag can cause death or serious injury to a child 12 years or younger, including a child in a rear-facing child restraint.**
- **Only use a rear-facing child restraint in a vehicle with a rear seat.**

Older Children And Child Restraints

Children who are two years old or who have outgrown their rear-facing convertible child seat can ride forward-facing in the vehicle. Forward-facing child seats and convertible child seats used in the forward-facing direction are for children who are over two years old or who have outgrown the rear-facing weight or height limit of their rear-facing convertible child seat. Children should remain in a forward-facing child seat with a harness for as long as possible, up to the highest weight or height allowed by the child seat.

All children whose weight or height is above the forward-facing limit for the child seat should use a belt-positioning booster seat until the vehicle's seat belts fit properly. If the child cannot sit with knees bent over the vehicle's seat cushion while the child's back is against the seatback, they should use a belt-positioning booster seat. The child and belt-positioning booster seat are held in the vehicle by the seat belt.

WARNING!

- **Improper installation can lead to failure of an infant or child restraint. It could come loose in a collision. The child could be badly injured or killed. Follow the child restraint manufacturer's directions exactly when installing an infant or child restraint.**
- **After a child restraint is installed in the vehicle, do not move the vehicle seat forward or rearward because it can loosen the child restraint attachments. Remove the child restraint before adjusting the vehicle seat position. When the vehicle seat has been adjusted, reinstall the child restraint.**
- **When your child restraint is not in use, secure it in the vehicle with a seat belt or LATCH anchorages, or remove it from the vehicle. Do not leave it loose in the vehicle. In a sudden stop or accident, it could strike the occupants or seatbacks and cause serious personal injury.**

Children Too Large For Booster Seats

Children who are large enough to wear the shoulder belt comfortably, and whose legs are long enough to bend over the front of the seat when their back is against the seatback, should use the seat belt in a rear seat. Use this simple 5-step test to decide whether the child can use the vehicle's seat belt alone:

1. Can the child sit all the way back against the back of the vehicle seat?
2. Do the child's knees bend comfortably over the front of the vehicle seat – while they are still sitting all the way back?
3. Does the shoulder belt cross the child's shoulder between their neck and arm?

4. Is the lap part of the belt as low as possible, touching the child's thighs and not their stomach?

5. Can the child stay seated like this for the whole trip?

If the answer to any of these questions was "no," then the child still needs to use a booster seat in this vehicle. If the child is using the lap/shoulder belt, check seat belt fit periodically and make sure the seat belt buckle is latched. A child's squirming or slouching can move the belt out of position. If the shoulder belt contacts the face or neck, move the child closer to the center of the vehicle, or use a booster seat to position the seat belt on the child correctly.

WARNING!

Never allow a child to put the shoulder belt under an arm or behind their back. In a crash, the shoulder belt will not protect a child properly, which may result in serious injury or death. A child must always wear both the lap and shoulder portions of the belt correctly.

Recommendations For Attaching Child Restraints

Restraint Type	Combined Weight of the Child + Child Restraint	Use Any Attachment Method Shown With An "X" Below			
		LATCH – Lower Anchors Only	Seat Belt Only	LATCH – Lower Anchors + Top Tether Anchor	Seat Belt + Top Tether Anchor
Rear-Facing Child Restraint	Up to 65 lbs (29.5 kg)	X	X		
Rear-Facing Child Restraint	More than 65 lbs (29.5 kg)		X		
Forward-Facing Child Restraint	Up to 65 lbs (29.5 kg)			X	X
Forward-Facing Child Restraint	More than 65 lbs (29.5 kg)				X

Lower Anchors And Tethers For CHildren (LATCH) Restraint System

LATCH Label

Your vehicle is equipped with the child restraint anchorage system called LATCH, which stands for Lower Anchors and Tethers for CHildren. The LATCH system has three vehicle anchor points for installing LATCH-equipped child seats. There are two lower anchorages located at the back of the seat cushion where it meets the seatback and one top tether anchorage located behind the seating position. These anchorages are used to install LATCH-equipped child seats without using the vehicle's seat belts. Some seating positions may have a top tether anchorage but no lower anchorages. In these seating positions, the seat belt must be used with the top tether anchorage to install the child restraint. Please see the following table for more information.

LATCH Positions For Installing Child Restraints In This Vehicle

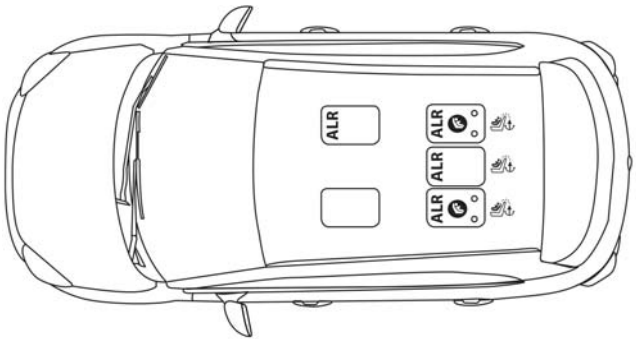

LATCH Positions

- Lower Anchorage Symbol (2 Anchorages Per Seating Position)
- Top Tether Anchorage Symbol

Frequently Asked Questions About Installing Child Restraints With LATCH		
What is the weight limit (child's weight + weight of the child restraint) for using the LATCH anchorage system to attach the child restraint?	65 lbs (29.5 kg)	Use the LATCH anchorage system until the combined weight of the child and the child restraint is 65 lbs (29.5 kg). Use the seat belt and tether anchor instead of the LATCH anchorage system once the combined weight is more than 65 lbs (29.5 kg).
Can the LATCH anchorages and the seat belt be used together to attach a rear-facing or forward-facing child restraint?	No	Do not use the seat belt when you use the LATCH anchorage system to attach a rear-facing or forward-facing child restraint.
Can a child seat be installed in the center position using the inner LATCH lower anchorage?	No	Use the seat belt and tether anchor to install a child seat in the center seating position.

Frequently Asked Questions About Installing Child Restraints With LATCH		
Can two child restraints be attached using a common lower LATCH anchorage?	No	Never “share” a LATCH anchorage with two or more child restraints. If the center position does not have dedicated LATCH lower anchorages, use the seat belt to install a child seat in the center position next to a child seat using the LATCH anchorages in an outboard position.
Can the rear-facing child restraint touch the back of the front passenger seat?	Yes	The child seat may touch the back of the front passenger seat if the child restraint manufacturer also allows contact. See your child restraint owner’s manual for more information.
Can the head restraints be removed?	Yes	The head restraints may be removed in every rear seating position.

Locating The LATCH Anchorages

The lower anchorages are round bars that are found at the rear of the seat cushion where it meets the seatback, below the anchorage symbols on the seatback. They are just visible when you lean into the rear seat to install the child restraint. You will easily feel them if you run your finger along the gap between the seatback and seat cushion.

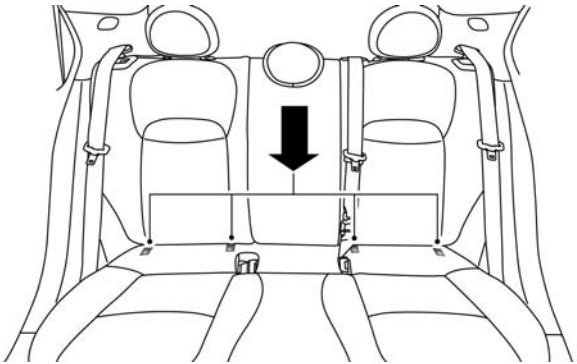

Lower Anchorage Location

Locating The Upper Tether Anchorages

There are tether strap anchorages behind each rear seating position located on the back of the seat.

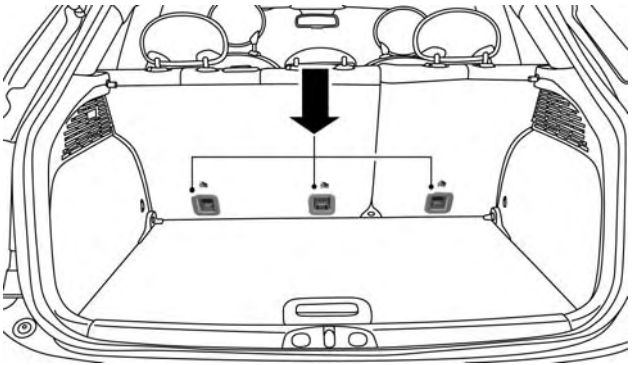

Tether Anchorage Locations

LATCH-compatible child restraint systems will be equipped with a rigid bar or a flexible strap on each side. Each will have a hook or connector to attach to the lower anchorage and a way to tighten the connection to the anchorage. Forward-facing child restraints and some rear-facing child restraints will also be equipped with a tether strap. The tether strap will have a hook at

the end to attach to the top tether anchorage and a way to tighten the strap after it is attached to the anchorage.

Center Seat LATCH

WARNING!

- **Do not install a child restraint in the center position using the LATCH system. This position is not approved for installing child seats using the LATCH attachments. You must use the seat belt and tether anchor to install a child seat in the center seating position.**
- **Never use the same lower anchorage to attach more than one child restraint. Please refer to "Installing The LATCH-Compatible Child Restraint System" for typical installation instructions.**

Always follow the directions of the child restraint manufacturer when installing your child restraint. Not all child restraint systems will be installed as described here.

To Install A LATCH-Compatible Child Restraint

If the selected seating position has a Switchable Automatic Locking Retractor (ALR) seat belt, stow the seat belt, following the instructions below. See the section "Installing Child Restraints Using The Vehicle Seat Belt" to check what type of seat belt each seating position has.

1. Loosen the adjusters on the lower straps and on the tether strap of the child seat so that you can more easily attach the hooks or connectors to the vehicle anchorages.
2. Place the child seat between the lower anchorages for that seating position. For some second row seats, you may need to recline the seat and/or raise the head restraint to get a better fit. If the rear seat can be moved forward and rearward in the vehicle, you may wish to move it to its rear-most position to make room for the child seat. You may also move the front seat forward to allow more room for the child seat.
3. Attach the lower hooks or connectors of the child restraint to the lower anchorages in the selected seating position.
4. If the child restraint has a tether strap, connect it to the top tether anchorage. See the section "Installing Child Restraints Using The Top Tether Anchorage" for directions to attach a tether anchor.

5. Tighten all of the straps as you push the child restraint rearward and downward into the seat. Remove slack in the straps according to the child restraint manufacturer's instructions.

6. Test that the child restraint is installed tightly by pulling back and forth on the child seat at the belt path. It should not move more than 1 inch (25.4 mm) in any direction.

How To Stow An Unused Switchable-ALR (ALR) Seat Belt

When using the LATCH attaching system to install a child restraint, stow all ALR seat belts that are not being used by other occupants or being used to secure child restraints. An unused belt could injure a child if they play with it and accidentally lock the seat belt retractor. Before installing a child restraint using the LATCH system, buckle the seat belt behind the child restraint and out of the child's reach. If the buckled seat belt interferes with the child restraint installation, instead of buckling it behind the child restraint, route the seat belt through the child restraint belt path and then buckle it. Do not lock the seat belt. Remind all children in the vehicle that the seat belts are not toys and that they should not play with them.

WARNING!

- **Improper installation of a child restraint to the LATCH anchorages can lead to failure of the restraint. The child could be badly injured or killed. Follow the child restraint manufacturer's directions exactly when installing an infant or child restraint.**
- **Child restraint anchorages are designed to withstand only those loads imposed by correctly-fitted child restraints. Under no circumstances are they to be used for adult seat belts, harnesses, or for attaching other items or equipment to the vehicle.**

Installing Child Restraints Using The Vehicle Seat Belt

Child restraint systems are designed to be secured in vehicle seats by lap belts or the lap belt portion of a lap/shoulder belt.

WARNING!

- **Improper installation or failure to properly secure a child restraint can lead to failure of the restraint. The child could be badly injured or killed.**
- **Follow the child restraint manufacturer's directions exactly when installing an infant or child restraint.**

The seat belts in the passenger seating positions are equipped with a Switchable Automatic Locking Retractor (ALR) that is designed to keep the lap portion of the seat belt tight around the child restraint so that it is not necessary to use a locking clip. The ALR retractor can be "switched" into a locked mode by pulling all of the webbing out of the retractor and then letting the webbing retract back into the retractor. If it is locked, the ALR will make a clicking noise while the webbing is pulled back into the retractor. Refer to the "Automatic Locking Mode" description in "Switchable Automatic Locking Retractors (ALR)" under "Occupant Restraint Systems" for additional information on ALR.

Please see the table below and the following sections for more information.

Lap/Shoulder Belt Systems For Installing Child Restraints In This Vehicle

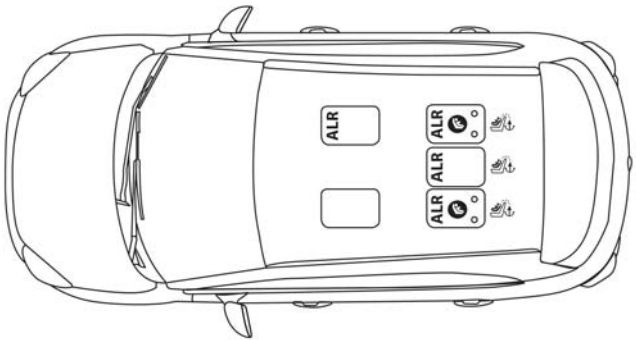

Automatic Locking Retractor (ALR) Locations

- ALR = Switchable Automatic Locking Retractor
- Top Tether Anchorage Symbol

Frequently Asked Questions About Installing Child Restraints With Seat Belts		
What is the weight limit (child's weight + weight of the child restraint) for using the Tether Anchor with the seat belt to attach a forward facing child restraint?	Weight limit of the Child Restraint	Always use the tether anchor when using the seat belt to install a forward facing child restraint, up to the recommended weight limit of the child restraint.
Can the rear-facing child restraint touch the back of the front passenger seat?	Yes	Contact between the front passenger seat and the child restraint is allowed, if the child restraint manufacturer also allows contact.
Can the head restraints be removed?	Yes	The head restraints can be removed in every rear seating position.
Can the buckle stalk be twisted to tighten the seat belt against the belt path of the child restraint?	No	Do not twist the buckle stalk in a seating position with an ALR retractor.

Installing A Child Restraint With A Switchable Automatic Locking Retractor (ALR):

Child restraint systems are designed to be secured in vehicle seats by lap belts or the lap belt portion of a lap/shoulder belt.

WARNING!

- **Improper installation or failure to properly secure a child restraint can lead to failure of the restraint. The child could be badly injured or killed.**
- **Follow the child restraint manufacturer's directions exactly when installing an infant or child restraint.**

1. Place the child seat in the center of the seating position. For some second row seats, you may need to recline the seat and/or raise the head restraint to get a better fit. If the rear seat can be moved forward and rearward in the vehicle, you may wish to move it to its rear-most position to make room for the child seat. You may also move the front seat forward to allow more room for the child seat.
2. Pull enough of the seat belt webbing from the retractor to pass it through the belt path of the child restraint. Do not twist the belt webbing in the belt path.
3. Slide the latch plate into the buckle until you hear a "click."
4. Pull on the webbing to make the lap portion tight against the child seat.
5. To lock the seat belt, pull down on the shoulder part of the belt until you have pulled all the seat belt webbing out of the retractor. Then, allow the webbing to retract back into the retractor. As the webbing retracts, you will hear a clicking sound. This means the seat belt is now in the Automatic Locking mode.
6. Try to pull the webbing out of the retractor. If it is locked, you should not be able to pull out any webbing. If the retractor is not locked, repeat step 5.
7. Finally, pull up on any excess webbing to tighten the lap portion around the child restraint while you push the child restraint rearward and downward into the vehicle seat.
8. If the child restraint has a top tether strap and the seating position has a top tether anchorage, connect the tether strap to the anchorage and tighten the tether strap. See the section "Installing Child Restraints Using the Top Tether Anchorage" for directions to attach a tether anchor.
9. Test that the child restraint is installed tightly by pulling back and forth on the child seat at the belt path. It should not move more than 1 inch (25.4 mm) in any direction.

Any seat belt system will loosen with time, so check the belt occasionally, and pull it tight if necessary.

Installing Child Restraints Using The Top Tether Anchorage:

WARNING!

Do not attach a tether strap for a rear-facing car seat to any location in front of the car seat, including the seat frame or a tether anchorage. Only attach the tether strap of a rear-facing car seat to the tether anchorage that is approved for that seating position, located behind the top of the vehicle seat. See the section "Lower Anchors and Tethers for CHildren (LATCH) Restraint System" for the location of approved tether anchorages in your vehicle.

1. Look behind the seating position where you plan to install the child restraint to find the tether anchorage. You may need to move the seat forward to provide better access to the tether anchorage. If there is no top tether anchorage for that seating position, move the child restraint to another position in the vehicle if one is available.
2. Route the tether strap to provide the most direct path for the strap between the anchor and the child seat. If your vehicle is equipped with adjustable rear head restraints, raise the head restraint, and where possible, route the tether strap under the head restraint and between the two posts. If not possible, lower the head restraint and pass the tether strap around the outboard side of the head restraint.
3. Attach the tether strap hook of the child restraint to the top tether anchorage as shown in the diagram.

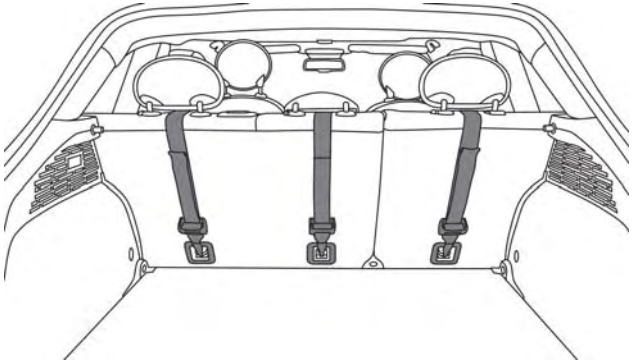

Tether Anchorage Locations

4. Remove slack in the tether strap according to the child restraint manufacturer's instructions.

WARNING!

- **An incorrectly anchored tether strap could lead to increased head motion and possible injury to the child. Use only the anchorage position directly behind the child seat to secure a child restraint top tether strap.**

(Continued)

WARNING! ***(Continued)***

- **If your vehicle is equipped with a split rear seat, make sure the tether strap does not slip into the opening between the seatbacks as you remove slack in the strap.**

Transporting Pets

Air Bags deploying in the front seat could harm your pet. An unrestrained pet will be thrown about and possibly injured, or injure a passenger during panic braking or in a collision.

Pets should be restrained in the rear seat in pet harnesses or pet carriers that are secured by seat belts.

SAFETY TIPS

Transporting Passengers

NOTE: Never transport passengers in the cargo area.

WARNING!

- **Do not leave children or animals inside parked vehicles in hot weather. Interior heat build-up may cause serious injury or death.**
- **It is extremely dangerous to ride in a cargo area, inside or outside of a vehicle. In a collision, people riding in these areas are more likely to be seriously injured or killed.**
- **Do not allow people to ride in any area of your vehicle that is not equipped with seats and seat belts.**
- **Be sure everyone in your vehicle is in a seat and using a seat belt properly.**

Exhaust Gas

WARNING!

Exhaust gases can injure or kill. They contain carbon monoxide (CO), which is colorless and odorless. Breathing it can make you unconscious and can eventually poison you. To avoid breathing (CO), follow these safety tips:

(Continued)

WARNING! ***(Continued)***

- **Do not run the engine in a closed garage or in confined areas any longer than needed to move your vehicle in or out of the area.**
- **If you are required to drive with the trunk/liftgate/rear doors open, make sure that all windows are closed and the climate control BLOWER switch is set at high speed. DO NOT use the recirculation mode.**
- **If it is necessary to sit in a parked vehicle with the engine running, adjust your heating or cooling controls to force outside air into the vehicle. Set the blower at high speed.**

The best protection against carbon monoxide entry into the vehicle body is a properly maintained engine exhaust system.

Whenever a change is noticed in the sound of the exhaust system, when exhaust fumes can be detected inside the vehicle, or when the underside or rear of the vehicle is damaged, have a competent mechanic inspect the complete exhaust system and adjacent body areas for broken, damaged, deteriorated, or mispositioned parts. Open seams or loose connections could permit exhaust fumes to seep into the passenger compartment.

In addition, inspect the exhaust system each time the vehicle is raised for lubrication or oil change. Replace as required.

Safety Checks You Should Make Inside The Vehicle

Seat Belts

Inspect the seat belt system periodically, checking for cuts, frays, and loose parts. Damaged parts must be replaced immediately. Do not disassemble or modify the system.

Front seat belt assemblies must be replaced after a collision. Rear seat belt assemblies must be replaced after a collision if they have been damaged (i.e., bent retractor, torn webbing, etc.). If there is any question regarding seat belt or retractor condition, replace the seat belt.

Air Bag Warning Light

The Air Bag warning light will turn on for four to eight seconds as a bulb check when the ignition switch is first turned to ON/RUN. If the light is either not on during starting, stays on, or turns on while driving, have the system inspected at an authorized dealer as soon as possible. This light will illuminate with a single chime when a fault with the Air Bag Warning Light has been detected, it will stay on until the fault is cleared. If the light comes on intermittently or remains on while driving, have an authorized dealer service the vehicle immediately. Refer to “Occupant Restraints” in “Safety” for further information.

Defroster

Check operation by selecting the defrost mode and place the blower control on high speed. You should be able to feel the air directed against the windshield. See your authorized dealer for service if your defroster is inoperable.

Floor Mat Safety Information

Always use floor mats designed to fit the footwell of your vehicle. Use only floor mats that leave the pedal area unobstructed and that are firmly secured so that they cannot slip out of position and interfere with the pedals or impair safe operation of your vehicle in other ways.

WARNING!

An improperly attached, damaged, folded, or stacked floor mat, or damaged floor mat fasteners may cause your floor mat to interfere with the accelerator, brake, or clutch pedals and cause a loss of vehicle control. To prevent SERIOUS INJURY or DEATH:

- **ALWAYS securely attach your floor mat using the floor mat fasteners. DO NOT install your floor mat upside down or turn your floor mat over. Lightly pull to confirm mat is secured using the floor mat fasteners on a regular basis.**
- **ALWAYS REMOVE THE EXISTING FLOOR MAT FROM THE VEHICLE before installing any other floor mat. NEVER install or stack an additional floor mat on top of an existing floor mat.**
- **ONLY install floor mats designed to fit your vehicle. NEVER install a floor mat that cannot be properly attached and secured to your vehicle. If a floor mat needs to be replaced, only use a FCA approved floor mat for the specific make, model, and year of your vehicle.**

(Continued)

WARNING! ***(Continued)***

- **ONLY use the driver's side floor mat on the driver's side floor area. To check for interference, with the vehicle properly parked with the engine off, fully depress the accelerator, the brake, and the clutch pedal (if present) to check for interference. If your floor mat interferes with the operation of any pedal, or is not secure to the floor, remove the floor mat from the vehicle and place the floor mat in your trunk.**
- **ONLY use the passenger's side floor mat on the passenger's side floor area.**
- **ALWAYS make sure objects cannot fall or slide into the driver's side floor area when the vehicle is moving. Objects can become trapped under accelerator, brake, or clutch pedals and could cause a loss of vehicle control.**
- **NEVER place any objects under the floor mat (e.g., towels, keys, etc.). These objects could change the position of the floor mat and may cause interference with the accelerator, brake, or clutch pedals.**

(Continued)

WARNING! *(Continued)*

- **If the vehicle carpet has been removed and re-installed, always properly attach carpet to the floor and check the floor mat fasteners are secure to the vehicle carpet. Fully depress each pedal to check for interference with the accelerator, brake, or clutch pedals then re-install the floor mats.**
- **It is recommended to only use mild soap and water to clean your floor mats. After cleaning, always check your floor mat has been properly installed and is secured to your vehicle using the floor mat fasteners by lightly pulling mat.**

Periodic Safety Checks You Should Make Outside The Vehicle

Tires

Examine tires for excessive tread wear and uneven wear patterns. Check for stones, nails, glass, or other objects lodged in the tread or sidewall. Inspect the tread for cuts and cracks. Inspect sidewalls for cuts, cracks, and bulges. Check the wheel nuts for tightness. Check the tires (including spare) for proper cold inflation pressure.

Lights

Have someone observe the operation of brake lights and exterior lights while you work the controls. Check turn signal and high beam indicator lights on the instrument panel.

Door Latches

Check for proper closing, latching, and locking.

Fluid Leaks

Check area under vehicle after overnight parking for fuel, engine coolant, oil, or other fluid leaks. Also, if gasoline fumes are detected, or if fuel or brake fluid leaks are suspected, the cause should be located and corrected immediately.

STARTING AND OPERATING

CONTENTS

■ STARTING THE ENGINE 214
- □ Tip Start Feature 215
- □ If Engine Fails To Start 215
- □ Cold Weather Operation 216
- □ Extended Park Starting. 216
- □ After Starting — Warming Up The Engine . . .217
- □ Stopping The Engine 217
- □ Turbocharger “Cool Down” — If Equipped . .217

■ ENGINE BREAK-IN RECOMMENDATIONS . .217

■ ELECTRIC PARK BRAKE (EPB) 218
- □ Auto Park Brake 221
- □ SafeHold 222
- □ Brake Service Mode 222

■ MANUAL TRANSMISSION 223
- □ Shifting. 224
- □ Downshifting 225

■ AUTOMATIC TRANSMISSION 226
- □ Gear Selector. 228
- □ Gear Ranges 229
- □ Transmission Limp Home Mode 234
- □ Ignition Park Interlock 235
- □ Brake/Transmission Shift Interlock System. . .235

■ SPEED CONTROL — IF EQUIPPED 235
- □ Activation. 236
- □ Setting A Desired Speed 236
- □ Deactivation 236
- □ Resume Speed. 236
- □ Varying The Speed 236

- Accelerating For Passing 237

■ ALL WHEEL DRIVE (AWD) — IF EQUIPPED .238

■ DYNAMIC SELECTOR — IF EQUIPPED 238

- Warning Messages 239

■ BRAKE CONTROL — IF EQUIPPED 239

- Brake Control 239
- Turning Brake Control On Or Off 241
- Changing Brake Control Sensitivity 241
- Brake Control Limited Warning. 242
- Service Brake Control Warning 242
- Precautions While Driving With Brake Control. 243
- General Information 246

■ PARKSENSE REAR PARK ASSIST — IF EQUIPPED 246

- ParkSense Sensors 247
- Enabling And Disabling ParkSense 248
- Service The Rear Park Assist System 249
- ParkSense System Usage Precautions. 249

■ LANESENSE — IF EQUIPPED 251

- LaneSense Operation 251
- Turning LaneSense On Or Off. 252
- LaneSense Warning Message. 252
- Changing LaneSense Status 254

■ PARKVIEW REAR BACK UP CAMERA — IF EQUIPPED 255

■ TIRE PRESSURE MONITORING SYSTEM (TPMS) 257

- Base System 259
- General Information. 261

■ FUEL REQUIREMENTS 261

- 1.4L Turbo Engine 261
- 2.4L Engine. 262
- Reformulated Gasoline 262
- Gasoline/Oxygenate Blends 262
- E-85 Usage In Non-Flex Fuel Vehicles 263

- CNG And LP Fuel System Modifications 263
- MMT In Gasoline 263
- Materials Added To Fuel 264
- Fuel System Cautions. 264
- Carbon Monoxide Warnings 265

■ ADDING FUEL 265

■ VEHICLE LOADING 268

- Certification Label 268

■ DRIVING ON SLIPPERY SURFACES 270

- Acceleration 270
- Traction 270

■ DRIVING THROUGH WATER 271

- Flowing/Rising Water 271
- Shallow Standing Water 271

■ POWER STEERING 272

■ TRAILER TOWING 273

- Common Towing Definitions 273
- Trailer Hitch Classification 276
- Trailer Towing Weights (Maximum Trailer Weight Ratings) 277
- Trailer And Tongue Weight 277
- Towing Requirements 278
- Towing Tips 283

■ RECREATIONAL TOWING (BEHIND MOTORHOME, ETC.) 284

- Towing This Vehicle Behind Another Vehicle .284

STARTING THE ENGINE

Before starting your vehicle, adjust your seat, adjust the inside and outside mirrors, fasten your seat belt, and if present, instruct all other occupants to buckle their seat belts.

WARNING!

- **Never leave children alone in a vehicle, or with access to an unlocked vehicle.**
- **Allowing children to be in a vehicle unattended is dangerous for a number of reasons. A child or others could be seriously or fatally injured. Children should be warned not to touch the parking brake, brake pedal or the gear selector.**
- **Do not leave the key fob in or near the vehicle (or in a location accessible to children), and do not leave the ignition in the ON or RUN mode. A child could operate power windows, other controls, or move the vehicle.**

Start the engine with the gear selector in the NEUTRAL or PARK position. Apply the brake before shifting to any driving range.

Manual Transmission

Proceed as follows:

1. Set the Electric Park Brake (EPB) and put the gear selector in the NEUTRAL position.
2. Press the clutch pedal to the floor, without pressing the accelerator.
3. Cycle the ignition to the START mode and release it as soon as the engine is started.
4. If the engine does not start, place the ignition in the OFF mode and wait 10-15 seconds before attempting to restart the engine.

Automatic Transmission

Proceed as follows:

1. Set the Electric Park Brake (EPB) and put the gear selector in the PARK or NEUTRAL position.
2. Press on the brake pedal, without pressing the accelerator.
3. Cycle the ignition to the START mode and release it as soon as the engine is started.

4. If the engine does not start, place the ignition in the OFF mode and wait 10-15 seconds before attempting to restart the engine.

Tip Start Feature

Do not press the accelerator. Cycle the ignition switch briefly to the START mode and release it. The starter motor will continue to run but will automatically disengage when the engine is running.

If Engine Fails To Start

WARNING!

Never pour fuel or other flammable liquid into the throttle body air inlet opening in an attempt to start the vehicle. This could result in flash fire causing serious personal injury.

If the engine fails to start after you have followed the "Normal Starting" or "Extreme Cold Weather" procedure, and has not experienced an extended park condition as identified in "Extended Park Starting" procedure it may be flooded. Push the accelerator pedal all the way to the floor and hold it there. Crank the engine for no more than 15 seconds. This should clear any excess fuel in case the engine is flooded. Leave the ignition RUN mode, release the accelerator pedal and repeat the "Normal Starting" procedure.

WARNING!

- **Never pour fuel or other flammable liquid into the throttle body air inlet opening in an attempt to start the vehicle. This could result in flash fire causing serious personal injury.**
- **Do not attempt to push or tow your vehicle to get it started. Vehicles equipped with an automatic transmission cannot be started this way. Unburned fuel could enter the catalytic converter and once the engine has started, ignite and damage the converter and vehicle.**
- **If the vehicle has a discharged battery, booster cables may be used to obtain a start from a booster battery or the battery in another vehicle. This type of start can be dangerous if done improperly. Refer to "Jump-Starting" in "In Case Of Emergency" for further information.**

CAUTION!

To prevent damage to the starter, do not continuously crank the engine for more than 25 seconds at a time. Wait 60 seconds before trying again.

Cold Weather Operation

To ensure reliable starting under extreme cold conditions an externally powered electric block heater (available from your authorized dealer) is required for the 1.4L Turbo engine below -20°F (-29°C) and for the 2.4L engine below -31°F (-35°C) and is recommended for the 2.4L engine below -20°F (-29°C).

To prevent possible engine damage while starting at low temperatures, this vehicle will inhibit engine cranking when the ambient temperature is less than -20°F (-29°C) for the 1.4L Turbo engine, and -31°F (-35°C) for the 2.4L engine, and the oil temperature sensor reading indicates an engine block heater has not been used. The message "plug in engine heater" will be displayed in the instrument cluster when the ambient temperature is below -4°F (-20°C) at the time the engine is shut off as a reminder to avoid possible crank delays at the next cold start.

Extended Park Starting

NOTE: Extended Park condition occurs when the vehicle has not been started or driven for at least 30 days.

1. Install a battery charger or jumper cables to the battery to ensure a full battery charge during the crank cycle.
2. Cycle the ignition to the START mode and release it when the engine starts.
3. If the engine fails to start within 10 to 15 seconds, cycle the ignition to the OFF mode, wait five seconds to allow the starter to cool, then repeat the Extended Park Starting procedure.
4. If the engine fails to start after eight attempts, allow the starter to cool for at least 10 minutes, then repeat the procedure.

CAUTION!

To prevent damage to the starter, do not crank continuously for more than 10 seconds at a time. Wait 10 to 15 seconds before trying again.

After Starting — Warming Up The Engine

Proceed as follows:

- Travel slowly, letting the engine run at a reduced RPM, without accelerating suddenly.
- It is recommended to wait until the engine coolant temperature gauge starts to rise for maximum performance.

Stopping The Engine

To shut off the engine with vehicle speed greater than 5 mph (8 km/h), you must push and hold the ignition or push the START/STOP button three times consecutively within a few seconds. The engine will shut down, and the ignition will be placed in the RUN position.

Turning OFF the car (cycle the ignition from the RUN mode to the OFF mode), the power supply to the accessories are maintained for a period of three minutes.

Opening the driver side door with the ignition in RUN will sound a short chime that reminds the driver to place the ignition to OFF.

When the ignition is in the OFF mode, the window switches remains active for three minutes. Opening a front door will cancel this function.

After severe driving, idle the engine to allow the temperature inside the engine compartment to cool before shutting off the engine.

Turbocharger “Cool Down” — If Equipped

This vehicle is equipped with an after-run pump to cool the turbocharger after the engine is shut off. Depending on the type of driving and the amount of cargo, the pump will run for up to 10 minutes after the engine has been shut off to circulate coolant through the turbocharger. Although the pump is rubber-mounted for quiet operation, it is normal to hear it running during this time.

ENGINE BREAK-IN RECOMMENDATIONS

A long break-in period is not required for the engine and drivetrain (transmission and axle) in your vehicle.

Drive moderately during the first 300 miles (500 km). After the initial 60 miles (100 km), speeds up to 50 or 55 mph (80 or 90 km/h) are desirable.

While cruising, brief full-throttle acceleration within the limits of local traffic laws contributes to a good break-in. Wide-open throttle acceleration in low gear can be detrimental and should be avoided.

The engine oil installed in the engine at the factory is a high-quality energy conserving type lubricant. Oil changes should be consistent with anticipated climate conditions under which vehicle operations will occur. For the recommended viscosity and quality grades, refer to "Dealer Service" in "Servicing And Maintenance".

CAUTION!

Never use Non-Detergent Oil or Straight Mineral Oil in the engine or damage may result.

NOTE: A new engine may consume some oil during its first few thousand miles (kilometers) of operation. This should be considered a normal part of the break-in and not interpreted as a problem.

ELECTRIC PARK BRAKE (EPB)

Your vehicle is equipped with an Electric Park Brake System (EPB) that offers simple operation, and some additional features that make the parking brake more convenient and useful.

The parking brake is primarily intended to prevent the vehicle from rolling while parked. Before leaving the vehicle, make sure that the parking brake is applied. Also, be certain to leave the transmission in PARK.

The EPB switch is located in the center console.

You can engage the EPB in two ways;

- Manually, by pulling up on the park brake switch momentarily to apply.
- Automatically, by enabling the Auto Park Brake feature in the customer programmable features section of the Uconnect Settings.

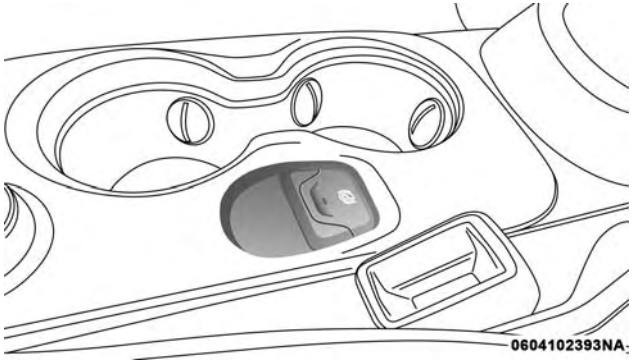

Electric Park Brake Switch

To apply the EPB manually, pull up on the switch momentarily. You may hear a slight whirring sound from the back of the vehicle while the EPB engages. Once the parking brake is fully engaged, the BRAKE warning lamp in the instrument cluster and an indicator on the switch will illuminate. If your foot is on the brake pedal while you apply the EPB, you may notice a small amount of brake pedal movement. The EPB can be applied even when the ignition switch is in the OFF mode but the BRAKE warning lamp will not illuminate, however, it can only be released when the ignition is in the RUN mode.

NOTE: The EPB fault lamp will illuminate if the EPB switch is held for longer than 20 seconds in either the released or applied position. The light will extinguish upon releasing the switch.

If the Auto Park Brake feature is enabled, the EPB will automatically engage whenever the transmission is placed into PARK, or with a manual transmission, when the ignition switch is in the STOP/OFF position. If your foot is on the brake pedal, you may notice a small amount of brake pedal movement while the EPB is engaging.

The EPB will be automatically released if the driver's seat belt is buckled and driver's intention to start (in forward or reverse direction) is recognized by the system

To release the EPB manually, the ignition must be in the RUN mode. Put your foot on the brake pedal, then push the EPB switch down momentarily. You may hear a slight whirring sound from the back of the vehicle while the parking brake disengages. You may also notice a small amount of movement in the brake pedal. Once the EPB is fully disengaged, the BRAKE warning lamp in the instrument cluster and the LED indicator on the switch will extinguish.

NOTE:

- When parking on a hill, it is important to turn the front wheels toward the curb on a downhill grade and away from the curb on an uphill grade. Apply the EPB before placing the gear selector in PARK, otherwise the load on the transmission locking mechanism may make it difficult to move the gear selector out of PARK. The EPB should always be applied whenever the driver is not in the vehicle.
- If the clutch pedal is released at the same time the gas pedal is pressed, the EPB will be automatically released (manual transmissions only).

WARNING!

- **When leaving the vehicle, always remove the key fob from the ignition and lock your vehicle.**
- **Never leave children alone in a vehicle, or with access to an unlocked vehicle. Allowing children to be in a vehicle unattended is dangerous for a number of reasons. A child or others could be seriously or fatally injured. Children should be warned not to touch the parking brake, brake pedal or the transmission gear selector.**

(Continued)

WARNING! ***(Continued)***

- **Do not leave the key fob in or near the vehicle (or in a location accessible to children), and do not leave the ignition in the ON or RUN mode. A child could operate power windows, other controls, or move the vehicle.**
- **Be sure the parking brake is fully disengaged before driving; failure to do so can lead to brake failure and a collision.**
- **Always fully apply the parking brake when leaving your vehicle, or it may roll and cause damage or injury. Also be certain to leave the transmission in PARK. Failure to do so may allow the vehicle to roll and cause damage or injury.**

CAUTION!

If the Brake System Warning Light remains on with the parking brake released, a brake system malfunction is indicated. Have the brake system serviced by an authorized dealer immediately.

If exceptional circumstances should make it necessary to engage the EPB while the vehicle is in motion, maintain upward pressure on the EPB switch for as

long as engagement is desired. The brake warning lamp could illuminate in case of the hydraulic system is not available. The rear stop lamps will also be illuminated automatically while the vehicle remains in motion.

To disengage the EPB while the vehicle is in motion, release the switch. If the vehicle is brought to a complete stop using the EPB, when the vehicle reaches approximately 1.9 mph (3 km/h) the EPB will remain engaged.

WARNING!

Driving the vehicle with the parking brake engaged, or repeated use of the parking brake to slow the vehicle may cause serious damage to the brake system. Be sure the parking brake is fully disengaged before driving; failure to do so can lead to brake failure and a collision.

In the unlikely event of a malfunction of the EPB system, a yellow EPB fault lamp will illuminate. This may be accompanied by the Brake warning lamp flashing. In this status some EPB functionalities may be deactivated. In this event, urgent service of the EPB system is required. Do not rely on the EPB to hold the vehicle stationary.

Auto Park Brake

The EPB can be programmed to be applied automatically whenever the vehicle speed is below 1.9 mph (3 km/h) and the automatic transmission is placed in PARK, or with a manual transmission, whenever the ignition is in the OFF mode. Auto Park Brake is enabled and disabled by customer selection through the Customer Programmable Features section of the Uconnect Settings.

Any single Auto Park Brake application can be bypassed by pushing the EPB switch to the release position while the transmission is placed in PARK (automatic transmission) and the ignition is in the RUN mode. In some cases, in case of Automatic or Dual clutch transmission, when the ignition is in the OFF mode EPB can automatically apply even if it has been previously disabled

SafeHold

SafeHold is a safety feature of the EPB system that will engage the park brake automatically if the vehicle is left unsecured while the ignition switch is in the RUN mode.

For automatic transmissions, the EPB will automatically engage if all of the following conditions are met:

- Vehicle speed is below 1.9 mph (3 km/h).
- There is no attempt to depress the brake pedal or accelerator pedal.
- The seat belt is unbuckled.
- The driver door is open.
- The vehicle is not in the PARK position.

For manual transmissions, the EPB will automatically engage if all of the following conditions are met:

- Vehicle speed is below 1.9 mph (3 km/h).
- There is no attempt to depress the brake pedal or accelerator pedal.
- The clutch pedal is not pressed.
- The seat belt is unbuckled.
- The driver door is open.

SafeHold can be temporarily bypassed by pushing the EPB Switch while the driver door is open and the brake pedal is pressed. Once manually bypassed, SafeHold will be enabled again once the vehicle reaches 12 mph (20 km/h) or the ignition is cycled to the OFF mode and back to RUN mode.

Brake Service Mode

We recommend having your brakes serviced by your authorized dealer. You should only make repairs for which you have the knowledge and the right equipment. You should only enter Brake Service Mode during brake service.

When servicing your rear brakes, it may be necessary for you or your technician to push the rear piston into the rear caliper bore. With the electric park brake system, this can only be done after retracting the EPB actuator. The actuator retraction can be done easily by entering the Brake Service Mode through the Uconnect Settings in your vehicle. This menu based system will guide you through the steps necessary to retract the EPB actuator in order to perform rear brake service.

Service Mode has requirements that must be met in order to be activated:

- The vehicle must be at a standstill.
- The parking brake must be disabled.
- The transmission must be in park or neutral.
- The EPB switch not activated.
- The ignition is in the ON mode.
- The brake pedal not pressed.

While in service mode, the EPB fault lamp will flash continuously while the ignition is cycled ON.

NOTE: A dedicated message will appear in the instrument cluster if Brake Service Mode cannot be activated.

When brake service work is complete, the following steps must be followed to reset the parking brake system to normal operation:

- Ensure the vehicle is at a standstill.
- Press the brake pedal with moderate force.
- Apply the EPB Switch.

NOTE: A dedicated message will appear in the instrument cluster if Brake Service Mode cannot be deactivated.

WARNING!

You can be badly injured working on or around a motor vehicle. Do only that service work for which you have the knowledge and the right equipment. If you have any doubt about your ability to perform a service job, take your vehicle to a competent mechanic.

MANUAL TRANSMISSION

WARNING!

You or others could be injured if you leave the vehicle unattended without having the parking brake fully applied. The parking brake should always be applied when the driver is not in the vehicle, especially on an incline.

CAUTION!

Never drive with your foot resting on the clutch pedal, or attempt to hold the vehicle on a hill with the clutch pedal partially engaged, as this will cause abnormal wear on the clutch.

NOTE: During cold weather, you may experience increased effort in shifting until the transmission fluid warms up. This is normal.

To shift the gears, press the clutch pedal to the floor and put the gear selector to the desired position (the diagram for the engagement of the gears is displayed on the handle of the lever).

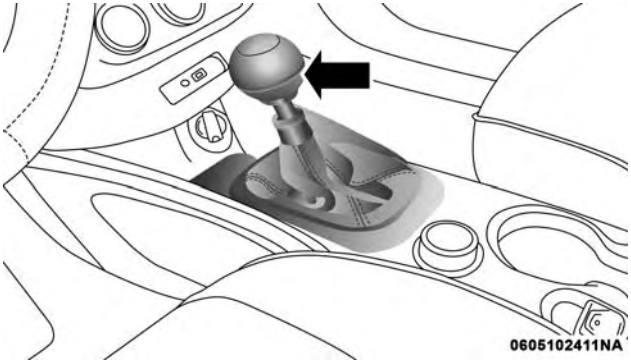

REVERSE Ring

To engage REVERSE gear from the NEUTRAL position lift the REVERSE ring, located below the knob and simultaneously move the lever to the left and then forward.

Shifting

Fully press the clutch pedal before shifting gears. As you release the clutch pedal, lightly press the accelerator pedal.

You should always use first gear when starting from a standing position.

Recommended Vehicle Shift Speeds

To utilize your manual transmission efficiently for fuel economy and performance, it should be upshifted as listed in the recommended shift speed chart. Shift at the vehicle speeds listed for acceleration. When heavily loaded or pulling a trailer, these recommended up-shift speeds may not apply.

Manual Transmission Shift Speeds in MPH (KM/H)					
All Engines	Gear Selection	2 to 3	3 to 4	4 to 5	5 to 6
	Accel.	24 (39)	34 (55)	47 (76)	56 (90)
	Cruise	19 (31)	27 (43)	37 (60)	41 (66)

Downshifting

Moving from a high gear down to a lower gear is recommended to preserve brakes when driving down steep hills. In addition, downshifting at the right time provides better acceleration when you desire to resume speed. Downshift progressively. Do not skip gears to avoid overspeeding the engine and clutch.

WARNING!

Do not downshift for additional engine braking on a slippery surface. The drive wheels could lose their grip, and the vehicle could skid.

CAUTION!

- **Skipping gears and downshifting into lower gears at higher vehicle speeds can damage the engine and clutch systems, Any attempt to shift into lower gear with clutch pedal depressed may result damage to the clutch system. Shifting into lower gear and releasing the clutch may result in engine damage.**
- **When descending a hill, be very careful to downshift one gear at a time to prevent overspeeding the engine which can cause engine damage, and/or clutch damage, even if the clutch pedal is pressed. If transfer case is in low range the vehicle**

(Continued)

CAUTION! *(Continued)*

speeds to cause engine and clutch damage are significantly lower.

- **Failure to follow the maximum recommended downshifting speeds may cause the engine damage and/or damage the clutch, even if the clutch pedal is pressed.**
- **Descending a hill in low range with clutch pedal depressed could result in clutch damage.**

Maximum Recommended Downshift Speeds

CAUTION!

Failure to follow the maximum recommended downshifting speeds may cause the engine to overspeed and/or damage the clutch disc, even if the clutch pedal is pressed.

Manual Transmission Shift Speeds in MPH (KM/H)					
Gear Selection	6 to 5	5 to 4	4 to 3	3 to 2	2 to 1
Maximum Speed	80 (129)	70 (113)	50 (81)	30 (48)	15 (24)

CAUTION!

If you skip a gear while downshifting or downshift at too high of a vehicle speed, these conditions may cause the engine to overspeed if too low of a gear is selected and the clutch pedal is released. Damage to the clutch and the transmission can result from skipping a gear while downshifting or downshifting at too high of a vehicle speed even if the clutch pedal is held pressed (i.e., not released).

AUTOMATIC TRANSMISSION

Your vehicle is equipped with a state of the art, fuel efficient nine-speed transmission.

The transmission gear range (PRND) is displayed both beside the gear selector and in the instrument cluster. To select a gear range, press the lock button on the gear selector and move the lever rearward or forward. You must also press the brake pedal to shift the transmission out of PARK, or to shift from NEUTRAL into DRIVE or

REVERSE when the vehicle is stopped or moving at low speeds (refer to "Brake/Transmission Shift Interlock System" in this section). Select the DRIVE range for normal driving.

WARNING!

- **It is dangerous to shift out of PARK or NEUTRAL if the engine speed is higher than idle speed. If your foot is not firmly pressing the brake pedal, the vehicle could accelerate quickly forward or in reverse. You could lose control of the vehicle and hit someone or something. Only shift into gear when the engine is idling normally and your foot is firmly pressing the brake pedal.**
- **Unintended movement of a vehicle could injure those in or near the vehicle. As with all vehicles, you should never exit a vehicle while the engine is running. Before exiting a vehicle, always apply the parking brake, shift the transmission into PARK, and turn the ignition OFF. When the ignition is in the OFF mode, the transmission is locked in PARK, securing the vehicle against unwanted movement.**

(Continued)

WARNING! ***(Continued)***

- **When leaving the vehicle, always make sure the ignition is in the OFF mode, remove the key fob from the vehicle, and lock the vehicle.**
- **Never leave children alone in a vehicle, or with access to an unlocked vehicle. Allowing children to be in a vehicle unattended is dangerous for a number of reasons. A child or others could be seriously or fatally injured. Children should be warned not to touch the parking brake, brake pedal or the transmission gear selector.**
- **Do not leave the key fob in or near the vehicle (or in a location accessible to children), and do not leave the ignition in the ACC or ON/RUN mode. A child could operate power windows, other controls, or move the vehicle.**

CAUTION!

Damage to the transmission may occur if the following precautions are not observed:

- **Shift into or out of PARK or REVERSE only after the vehicle has come to a complete stop.**

(Continued)

CAUTION! ***(Continued)***

- **Do not shift between PARK, REVERSE, NEUTRAL, or DRIVE when the engine is above idle speed.**
- **Before shifting into any gear, make sure your foot is firmly pressing the brake pedal.**

NOTE: You must press and hold the brake pedal while shifting out of PARK.

Gear Selector

The transmission gear selector has PARK, REVERSE, NEUTRAL, DRIVE, and AutoStick (+/-) shift positions. Manual shifts can be made using the AutoStick shift control (refer to "AutoStick" in this section for further information). Toggling the gear selector forward (-) or rearward (+) while in the AutoStick position (beside the DRIVE position) will manually select the transmission gear, and will display the current gear in the instrument cluster as 1, 2, 3, etc.

NOTE: If the gear selector cannot be moved to the PARK, REVERSE, or NEUTRAL position (when pushed forward) it is probably in the AutoStick (+/-) position (beside the DRIVE position). In AutoStick mode, the transmission gear is displayed in the instrument cluster without the "D" indicator (i.e. as 1, 2, 3, etc. rather than D1, D2, D3, etc.). Move the gear selector to the right (into the DRIVE [D] position) for access to PARK, REVERSE, and NEUTRAL.

The electronically-controlled transmission adapts its shift schedule based on driver inputs, along with environmental and road conditions. The transmission electronics are self-calibrating. The first few shifts on a new vehicle may be somewhat abrupt. This is a normal condition, and precision shifts will develop within a few hundred miles (kilometers).

Gear Selector Lock Button

Only shift from DRIVE to PARK or REVERSE when the accelerator pedal is released and the vehicle is stopped. Be sure to keep your foot on the brake pedal when shifting between these gears.

DO NOT race the engine when shifting from PARK or NEUTRAL into another gear range.

CAUTION!

After selecting any gear range, wait a moment to allow the selected gear to engage before accelerating. This is especially important when the engine is cold.

Gear Ranges

PARK (P)

This range supplements the Electric Park Brake (EPB) by locking the transmission. The engine can be started in this range. Never attempt to use PARK while the vehicle is in motion. Apply the EPB when leaving the vehicle in this range.

When parking on a level surface, you may shift the transmission into PARK first, and then apply the EPB.

When parking on a hill, apply the EPB before shifting the transmission to PARK, otherwise the load on the transmission locking mechanism may make it difficult to move the gear selector out of PARK. As an added precaution, turn the front wheels toward the curb on a downhill grade and away from the curb on an uphill grade.

When exiting the vehicle, always:

- Apply the parking brake.
- Shift the transmission into PARK.
- Turn the engine OFF.
- Remove the key fob.

WARNING!

- **Never use the PARK position as a substitute for the parking brake. Always apply the parking brake fully when exiting the vehicle to guard against vehicle movement and possible injury or damage.**
- **Your vehicle could move and injure you and others if it is not in PARK. Check by trying to move the transmission gear selector out of PARK with the brake pedal released. Make sure the transmission is in PARK before leaving the vehicle.**
- **It is dangerous to shift out of PARK or NEUTRAL if the engine speed is higher than idle speed. If your foot is not firmly pressing the brake pedal, the vehicle could accelerate quickly forward or in**

(Continued)

WARNING! ***(Continued)***

reverse. You could lose control of the vehicle and hit someone or something. Only shift into gear when the engine is idling normally and your foot is firmly pressing the brake pedal.

- **Unintended movement of a vehicle could injure those in or near the vehicle. As with all vehicles, you should never exit a vehicle while the engine is running. Before exiting a vehicle, always apply the parking brake, shift the transmission into PARK, and turn the ignition OFF. When the ignition is in the OFF mode, the transmission is locked in PARK, securing the vehicle against unwanted movement.**
- **When leaving the vehicle, always make sure the ignition is in the OFF mode, remove the key fob from the vehicle, and lock the vehicle.**
- **Never leave children alone in a vehicle, or with access to an unlocked vehicle. Allowing children to be in a vehicle unattended is dangerous for a number of reasons. A child or others could be seriously or fatally injured. Children should be**

(Continued)

WARNING! *(Continued)*

warned not to touch the parking brake, brake pedal or the transmission gear selector.

- **Do not leave the key fob in or near the vehicle (or in a location accessible to children), and do not leave the ignition in the ACC or ON/RUN mode. A child could operate power windows, other controls, or move the vehicle.**

CAUTION!

- **Before moving the transmission gear selector out of PARK, you must start the engine, and also press the brake pedal. Otherwise, damage to the gear selector could result.**
- **DO NOT race the engine when shifting from PARK or NEUTRAL into another gear range, as this can damage the drivetrain.**

The following indicators should be used to ensure that you have engaged the transmission into the PARK position:

- When shifting into PARK, press the lock button on the gear selector, and firmly move the gear selector all the way forward until it stops and is fully seated.
- Look at the transmission gear position display and verify that it indicates the PARK position (P), and is not blinking.
- With the brake pedal released, verify that the gear selector will not move out of PARK.

Reverse (R)

This range is for moving the vehicle backward. Shift into REVERSE only after the vehicle has come to a complete stop.

Neutral (N)

Use this range when the vehicle is standing for prolonged periods with the engine running. The engine may be started in this range. Apply the electric park brake and shift the transmission into PARK if you must leave the vehicle.

WARNING!

Do not coast in NEUTRAL and never turn off the ignition to coast down a hill. These are unsafe practices that limit your response to changing traffic or road conditions. You might lose control of the vehicle and have a collision.

CAUTION!

Towing the vehicle, coasting, or driving for any other reason with the transmission in NEUTRAL can cause severe transmission damage. Refer to "Recreational Towing" in "Starting And Operating" and "Towing A Disabled Vehicle" in "In Case Of Emergency" for further information.

Drive (D)

This range should be used for most city and highway driving. It provides the smoothest upshifts and downshifts, and the best fuel economy. The transmission automatically upshifts through all forward gears. The DRIVE position provides optimum driving characteristics under all normal operating conditions.

When frequent transmission shifting occurs (such as when operating the vehicle under heavy loading conditions, in hilly terrain, traveling into strong head winds or while towing a heavy trailer), use the AutoStick shift control (refer to "AutoStick" in this section for further information) to select a lower gear. Under these conditions, using a lower gear will improve performance and extend transmission life by reducing excessive shifting and heat buildup.

If the transmission temperature exceeds normal operating limits, the transmission controller may modify the transmission shift schedule, reduce engine torque, and/or expand the range of torque converter clutch engagement. This is done to prevent transmission damage due to overheating.

If the transmission becomes extremely hot, the "Transmission Temperature Warning Light" may illuminate and the transmission may operate differently until the transmission cools down.

During cold temperatures, transmission operation may be modified depending on engine and transmission temperature as well as vehicle speed. This feature improves warm up time of the engine and transmission to achieve maximum efficiency. Engagement of the torque converter clutch, and shifts into 8th or 9th gear, are inhibited until the transmission fluid is warm. Normal operation will resume once the transmission temperature has risen to a suitable level.

AutoStick

AutoStick is a driver-interactive transmission feature providing manual shift control, giving you more control of the vehicle. AutoStick allows you to maximize engine braking, eliminate undesirable upshifts and downshifts,

and improve overall vehicle performance. This system can also provide you with more control during passing, city driving, cold slippery conditions, mountain driving, trailer towing and many other situations.

Operation

When the gear selector is in the AutoStick position (beside the DRIVE position), it can be moved forward and rearward. This allows the driver to manually select the transmission gear being used. Moving the gear selector forward (-) triggers a downshift, and rearward (+) an upshift. The current gear is displayed in the instrument cluster.

NOTE: In AutoStick mode, the transmission will only shift up or down when the driver moves the gear selector rearward (+) or forward (-), except as described below.

- The transmission will automatically upshift when necessary to prevent engine overspeed.
- The transmission will automatically downshift as the vehicle slows (to prevent engine lugging) and will display the current gear.
- The transmission will automatically downshift to first or second gear (depending on model) when coming to a stop. After a stop, the driver should manually upshift (+) the transmission as the vehicle is accelerated.
- You can start out (from a stop) in first or second gear. Starting out in second gear can be helpful in snow or icy conditions. Tap the gear selector forward or rearward to select the desired gear after the vehicle is brought to a stop.
- If a requested downshift would cause the engine to overspeed, that shift will not occur.
- The system will ignore attempts to upshift at too low of a vehicle speed.
- Avoid using speed control when AutoStick is engaged because the transmission will not shift automatically.
- Transmission shifting will be more noticeable when AutoStick is enabled.
- The system may revert to automatic shift mode if a fault or overheat condition is detected.

To disengage AutoStick mode, return the gear selector to the DRIVE position. You can shift in or out of the

AutoStick position at any time without taking your foot off the accelerator pedal.

WARNING!

Do not downshift for additional engine braking on a slippery surface. The drive wheels could lose their grip and the vehicle could skid, causing a collision or personal injury.

Transmission Limp Home Mode

Transmission function is electronically monitored for abnormal conditions. If a condition is detected that could result in transmission damage, Transmission Limp Home Mode is activated. In this mode, the transmission remains in fourth gear regardless of which forward gear is selected. PARK, REVERSE, and NEUTRAL will continue to operate. The Malfunction Indicator Light (MIL) may be illuminated. Limp Home Mode allows the vehicle to be driven to an authorized dealer for service without damaging the transmission.

In the event of a momentary problem, the transmission can be reset to regain all forward gears by performing the following steps:

1. Stop the vehicle.
2. Shift the transmission into PARK.
3. Cycle the ignition to the STOP/OFF position.
4. Wait approximately 10 seconds.
5. Restart the engine.
6. Shift into the desired gear range. If the problem is no longer detected, the transmission will return to normal operation.

NOTE: Even if the transmission can be reset, we recommend that you visit your authorized dealer at your earliest possible convenience. Your authorized dealer has diagnostic equipment to determine if the problem could recur. If the transmission cannot be reset, authorized dealer service is required.

Ignition Park Interlock

Vehicles Equipped With Keyless Enter-N-Go:

This vehicle is equipped with an Ignition Park Interlock, which requires the transmission to be in PARK before the ignition can be turned to the STOP/OFF mode. Also, the transmission is locked in PARK whenever the ignition is in the STOP/OFF mode.

Brake/Transmission Shift Interlock System

This vehicle is equipped with a Brake Transmission Shift Interlock system (BTSI) that holds the transmission gear selector in PARK unless the brakes are applied. To shift the transmission out of PARK, the ignition must be cycled to the RUN mode (engine running or not) and the brake pedal must be pressed.

The brake pedal must also be pressed before pushing the button on the gear selector to shift from NEUTRAL into DRIVE or REVERSE when the vehicle is stopped or moving at low speeds.

SPEED CONTROL — IF EQUIPPED

When engaged, the Speed Control takes over accelerator operations at speeds greater than 25 mph (40 km/h).

The Speed Control buttons are located on the right side of the steering wheel.

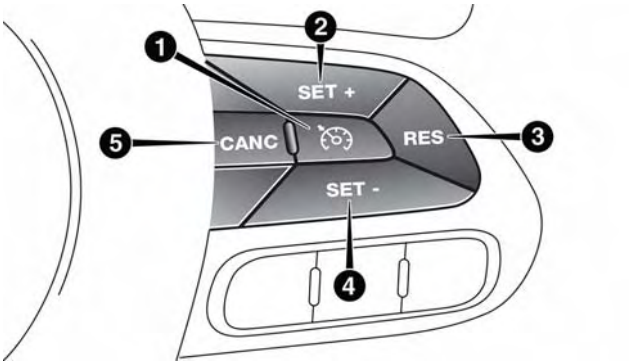

Speed Control Buttons

1 — On/Off
2 — SET+/Accel
3 — RES/Resume
4 — SET-/Decel
5 — CANC/Cancel

NOTE: In order to ensure proper operation, the Speed Control System has been designed to shut down if multiple Speed Control functions are operated at the same time. If this occurs, the Speed Control System can be reactivated by pushing the Speed Control on/off button and resetting the desired vehicle set speed.

Activation

Push the on/off button to activate the Speed Control. The cruise indicator light in the instrument cluster display will illuminate. To turn the system off, push the on/off button a second time. The cruise indicator light will turn off. The system should be turned off when not in use.

WARNING!

Leaving the Speed Control system on when not in use is dangerous. You could accidentally set the system or cause it to go faster than you want. You could lose control and have an accident. Always leave the system off when you are not using it.

Setting A Desired Speed

Turn the Speed Control on.

NOTE: The vehicle should be traveling at a steady speed and on level ground before pushing the SET (+) or SET (-) button.

When the vehicle has reached the desired speed, push the SET (+) or SET (-) button and release. Release the accelerator and the vehicle will operate at the selected speed.

Deactivation

A soft tap on the brake pedal, pushing the CANC button, ESC intervention, brake control mitigation, electronic park brake intervention, or normal brake pressure while slowing the vehicle will deactivate the Speed Control without erasing the set speed from memory.

Pushing the on/off button or turning the ignition switch to STOP erases the set speed from memory.

Resume Speed

To resume a previously set speed, push the RES button and release. Resume can be used at any speed above 20 mph (32 km/h).

Varying The Speed

To Increase Speed

When the Speed Control is set, you can increase speed by pushing the SET **(+)** button.

The driver's preferred units can be selected through the Uconnect system if equipped. Refer to "Uconnect Settings" in "Multimedia" for more information. The speed increment shown is dependant on the chosen speed unit of U.S. (mph) or Metric (km/h):

U.S. Speed (mph)

- Pushing the SET **(+)** button once will result in a 1 mph increase in set speed. Each subsequent tap of the button results in an increase of 1 mph.
- If the button is continually pushed, the speed will continue to increase until the button is released, then the new set speed will be established.

Metric Speed (km/h)

- Pushing the SET **(+)** button once will result in a 1 km/h increase in set speed. Each subsequent tap of the button results in an increase of 1 km/h.
- If the button is continually pushed, the speed will continue to increase until the button is released, then the new set speed will be established.

To Decrease Speed

When the Speed Control is set, you can decrease speed by pushing the SET **(-)** button.

The driver's preferred units can be selected through the Uconnect system if equipped. Refer to "Uconnect Settings" in "Multimedia" for more information. The speed increment shown is dependant on the chosen speed unit of U.S. (mph) or Metric (km/h):

U.S. Speed (mph)

- Pushing the SET **(-)** button once will result in a 1 mph decrease in set speed. Each subsequent tap of the button results in a decrease of 1 mph.
- If the button is continually pushed, the speed will continue to decrease until the button is released, then the new set speed will be established.

Metric Speed (km/h)

- Pushing the SET **(-)** button once will result in a 1 km/h decrease in set speed. Each subsequent tap of the button results in a decrease of 1 km/h.
- If the button is continually pushed, the speed will continue to decrease until the button is released, then the new set speed will be established.

Accelerating For Passing

Press the accelerator as you would normally. When the pedal is released, the vehicle will return to the set speed.

ALL WHEEL DRIVE (AWD) — IF EQUIPPED

This feature provides on-demand All-Wheel Drive (AWD). The system is automatic with no driver inputs or additional driving skills required. Under normal driving conditions, the front wheels provide most of the traction. If the front wheels begin to lose traction, power is shifted automatically to the rear wheels. The greater the front wheel traction loss, the greater the power transfer to the rear wheels.

Additionally, on dry pavement under heavy throttle input (where one may have no wheel spin), torque will be sent to the rear in a pre-emptive effort to improve vehicle launch and performance characteristics.

CAUTION!

All wheels must have the same size and type tires. Unequal tire sizes must not be used. Unequal tire size may cause failure of the power transfer unit.

DYNAMIC SELECTOR — IF EQUIPPED

The Dynamic Selector combines the capabilities of the vehicle control systems, along with driver input, to provide the best performance in all driving conditions.

Dynamic Selector Switch

The Dynamic Selector consists of the following positions:

Auto Mode – This mode is designed for comfort and safety in normal driving conditions. In versions equipped with all-wheel drive, this mode also reduces fuel consumption by automatically altering the distribution of torque between the front and rear axle.

All Weather Mode – This mode offers increased traction control and stability control for low traction conditions such as driving on a dirt road or off road as well as wet and slippery roads.

Sport Mode – This mode is designed to increase steering feedback to the driver with a slight increase in effort and changes the transmission shift schedules for more aggressive shifting. This driving mode is useful while driving on twisty roads where more steering precision is desired in spirited cornering.

Warning Messages

In the event of a system fault, the system automatically defaults to "Auto" mode and a message will appear in the instrument cluster display.

Refer to "Instrument Cluster Display" in "Getting To Know Your Instrument Panel" for further information.

BRAKE CONTROL — IF EQUIPPED

Brake Control

The Brake Control system with mitigation provides the driver with audible warnings, visual warnings (within the instrument cluster display), and may apply a brake jerk to warn the driver when it detects a potential frontal collision. The warnings and limited braking are intended to provide the driver with enough time to react, avoid or mitigate the potential collision.

NOTE:

- Brake Control monitors the information from the forward looking sensors as well as the Electronic Brake Controller (EBC), to calculate the probability of a forward collision. When the system determines that a forward collision is probable, the driver will be provided with audible and visual warnings and may provide a brake jerk warning.
- If the driver does not take action based upon these progressive warnings, then the system will provide a limited level of active braking to help slow the vehicle and mitigate the potential forward collision. If the driver reacts to the warnings by braking and the system determines that the driver intends to avoid the collision by braking but has not applied sufficient brake force, the system will compensate and provide additional brake force as required.

Vehicles With A Manual Transmission: After the end of the intervention of automatic braking, the engine could stall, unless the driver can depress the clutch pedal.

Vehicles With Automatic Transmission: After the end of the intervention of automatic braking, the transmission may remain in last gear stored: therefore the car

could lurch forward, once the brakes release a few seconds later. If the Brake Control event stops the vehicle completely, the system will hold the vehicle at standstill for two seconds and then release the brakes.

If a Brake Control event begins at a speed below 20 mph (32 km/h), the system may provide the maximum braking possible to mitigate the potential forward collision. If the Brake Control event stops the vehicle completely, the system will hold the vehicle at standstill for two seconds and then release the brakes.

Brake Control Message

When the system determines a collision with the vehicle in front of you is no longer probable, the warning message will be deactivated.

NOTE:

- The minimum speed for Brake Control activation is 4 mph (7 km/h).
- The maximum speed for Brake Control activation is 124 mph (200 km/h).
- The Brake Control alerts may be triggered on objects other than vehicles such as guard rails or sign posts based on the course prediction. This is expected and is a part of normal Brake Control activation and functionality.
- The Brake Control system is intended for on-road use only. If the vehicle is taken off-road, the Brake Control system should be deactivated to prevent unnecessary warnings to the surroundings.
- The active braking is enabled only if the front seat belts are fastened.

WARNING!

Brake Control is not intended to avoid a collision on its own, nor can Brake Control detect every type of potential collision. The driver has the responsibility to avoid a collision by controlling the vehicle via braking and steering. Failure to follow this warning could lead to serious injury or death.

Turning Brake Control On Or Off

The Brake Control menu setting is located in the Uconnect settings.

NOTE: The default status of Brake Control is "Warning + Active Braking." This allows the system to warn you of a possible collision with the vehicle in front of you and enable the active braking.

- Changing the Brake Control status to "Off" deactivates the system, so no warning or active braking will be available in case of a possible collision
- Changing the Brake Control status to "Only Warning" prevents the system from providing limited active braking, or additional brake support if the driver is not braking adequately in the event of a potential frontal collision, but maintains the audible and visual warnings.

Changing the status of the system is only possible with the vehicle at a complete stop.

NOTE: The Brake Control system state is not kept in memory from one key cycle to the next. If the system is turned off, it will turn on when the vehicle is restarted.

Changing Brake Control Sensitivity

By changing the settings on the menu of the Uconnect system, you can change the sensitivity of the system by choosing one of the following three options: "Near", "Medium" or "Far". Refer to "Multimedia" for further information.

The default option is "Medium". This setting provides that the system notify the driver of a possible accident with the vehicle ahead of it when the latter is at a standard distance, intermediate between the other two possible settings.

By setting the sensitivity of the system to "Far", the system will warn the driver of a possible accident with the vehicle in front when the latter is at a greater distance, giving you the chance to act on the brakes in

a more limited and gradual. This setting gives the driver the maximum possible time of reaction to prevent a possible accident.

By changing the option to ″Near″, the system will warn the driver of a possible accident with the vehicle ahead of it when the latter is a reduced distance. This setting offers a reaction time to the driver lower than the settings ″Medium″ and ″Far″, in the case of a potential accident, while a more dynamic driving of the car.

The setting of the sensitivity of the system is maintained in memory when the engine is switched off.

Brake Control Limited Warning

If the instrument cluster display will read “Brake Control Limited Functionality” or “Brake Control Limited Functionality Clean Front Windshield” momentarily, there may be a condition that limits Brake Control functionality. Although the vehicle is still drivable under normal conditions, the active braking may not be fully available. Once the condition that limited the system performance is no longer present, the system will return to its full performance state. If the problem persists, see your authorized dealer.

Service Brake Control Warning

If the system turns off, and the instrument cluster display displays:

- Brake Control Unavailable Service Required

This indicates there is an internal system fault. Although the vehicle is still drivable under normal conditions, have the system checked by an authorized dealer.

“Wipe Front Radar Sensor In Front Of Vehicle” Warning

The “Brake Control Front Radar Sensor Temporarily Blocked” warning will display when conditions temporarily limit system performance. This most often occurs at times of poor visibility, such as in snow or heavy rain. The system may also become temporarily blinded due to obstructions, such as mud, dirt or ice. In these cases, the instrument cluster display will display “Brake Control Front Radar Sensor Temporarily Blocked” and the system will deactivate.

The “Brake Control Front Radar Sensor Temporarily Blocked” message can sometimes be displayed while driving in highly reflective areas (i.e. tunnels with reflective tiles, or ice and snow). The system will

recover after the vehicle has left these areas. Under rare conditions, when the radar is not tracking any vehicles or objects in its path this warning may temporarily occur.

If weather conditions are not a factor, the driver should examine the sensor. It may require cleaning or removal of an obstruction. The sensor is located behind the lower grille. In absence of visible obstructions on the bumper, it could be necessary to wipe off the radar directly on the surface, after having the radar cover removed. It's recommended that your authorized dealer perform's this operation.

NOTE:

- If the "Brake Control Front Radar Sensor Temporarily Blocked" message occurs frequently (e.g. more than once on every trip) without any snow, rain, mud, or other obstruction, have the radar sensor realigned at your authorized dealer.
- Installing a snow plow, front-end protector, an aftermarket grille or modifying the grille is not recommended. Doing so may block the sensor and inhibit Brake Control operation.

Precautions While Driving With Brake Control

In certain driving conditions, such as:

- Driving in the vicinity of a curve
- Small vehicles and/or not aligned to the lane
- Lane changing of other vehicles
- Passing of vehicles in an oncoming intersection

The intervention of the system could be unexpected or delayed. The driver must therefore always pay particular attention, while maintaining control of the car to drive in complete safety.

Driving In The Vicinity Of A Curve

Entering or exiting a large curve, the system could detect the presence of a vehicle that is in front of the car, but that does not preside in the same lane. In cases such as this, the system might respond.

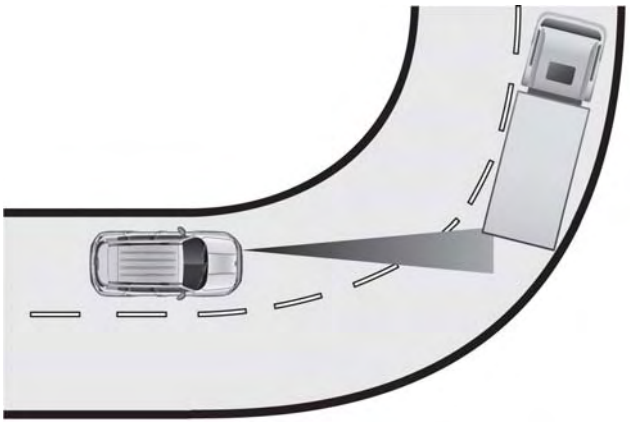

Driving In The Vicinity Of A Curve

Small Vehicles And/Or Not Aligned To The Lane

The system is not able to detect the presence of vehicles that are in front of the car but placed outside the field of action of the radar sensor and could therefore not react in the presence of small vehicles such as bicycles or motorcycles.

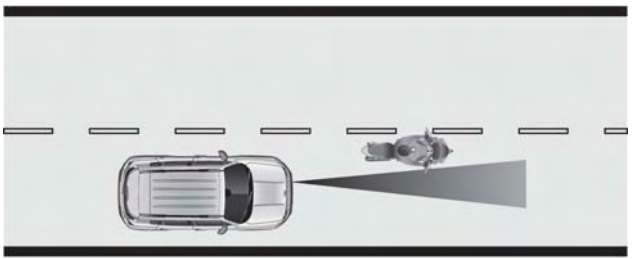

Small Vehicles And/Or Not Aligned To The Lane

Lane Changing Of Other Vehicles

Vehicles that suddenly change lane, while standing in the traffic lane of their car and inside the field of action of the radar sensor may cause the intervention of the system.

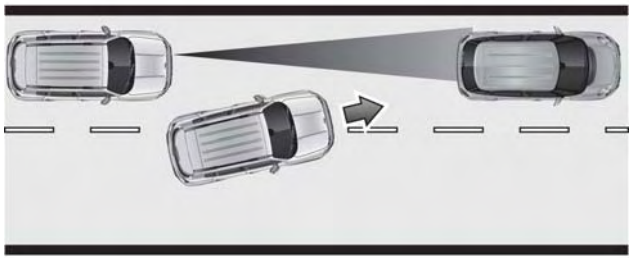

Lane Changing Of Other Vehicles

Passing Of Vehicles In An Oncoming Intersection

The system could temporarily react to a vehicle that crossed the range of the radar sensor, in an oncoming intersection.

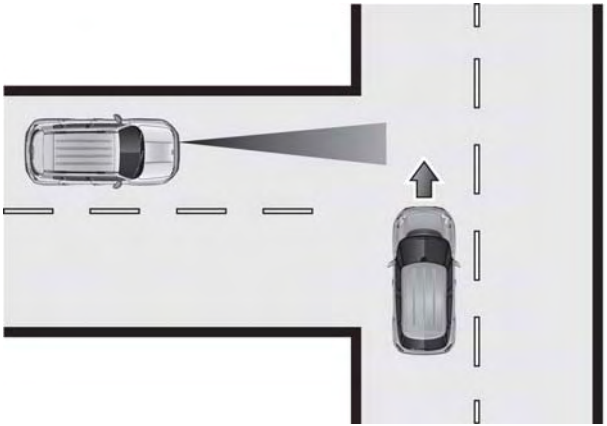

Passing Of Vehicles In An Oncoming Intersection

General Information

This vehicle has systems that operate on radio frequency that comply with Part 15 of the Federal Communications Commission (FCC) rules and with Industry Canada Standards RSS- GEN/210/220/310.

Operation is subject to the following two conditions:

1. The device may not cause harmful interference.
2. The device must accept any interference received, including interference that may cause undesired operation of the device.

Changes or modifications to any of these systems by other than an authorized service facility could void authorization to use this equipment.

PARKSENSE REAR PARK ASSIST — IF EQUIPPED

The ParkSense Rear Park Assist system provides visual and audible indications of the distance between the rear fascia and a detected obstacle when backing up, e.g. during a parking maneuver. Refer to ParkSense System Usage Precautions for limitations of this system and recommendations

ParkSense will retain the last system state (enabled or disabled) from the last ignition cycle when the ignition is changed to RUN mode.

ParkSense can be active only when the gear selector is in REVERSE.

ParkSense Sensors

The four ParkSense sensors, located in the rear fascia/bumper, monitor the area behind the vehicle that is within the sensors' field of view. The sensors can detect obstacles from approximately 12 inches (30 cm) up to 59 inches (150 cm) from the rear fascia/bumper in the horizontal direction, depending on the location, type and orientation of the obstacle.

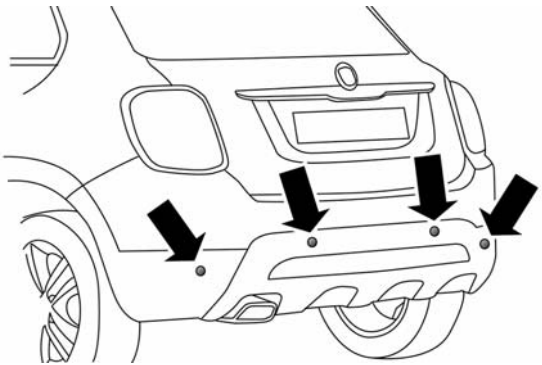

Parking Sensors

Chime

By shifting the vehicle in REVERSE and in the case of the presence of a rear obstacle, an acoustic signal that varies with the distance of the obstacle from the bumper is activated.

The frequency of the acoustic signal:

- Increases with the distance between car and object decreases.
- Becomes continuous when the distance that separates the car from the obstacle is less than approximately 12 inches (30 cm), while terminates immediately if the distance to the obstacle increases.
- Remains constant if the distance between car and obstacle remains unchanged. If this situation occurs for the side sensors, the signal is stopped after approximately three seconds to avoid, for example, it activates in case of maneuver along a wall.

When the system emits a beeping sound, the volume of the Uconnect system, if turned on, is automatically lowered by ParkSense.

Detection Distances

If the sensors detect more obstacles, it is taken into account only what is the shorter distance.

Instrument Cluster Display

ParkSense is displayed on the instrument cluster only if you have selected the item "Sound And Display" inside the "Settings" menu of the Uconnect system.

If an obstacle is detected in the center rear region, the display will show a single solid arc in the center rear region and will produce a one-half second tone. As the vehicle moves closer to the obstacle, the display will show the single arc moving closer to the vehicle and the sound tone will change from slow, to fast, to continuous.

If an obstacle is detected in the left and/or right rear region, the display will show a single flashing arc in the left and/or right rear region and will produce a fast sound tone. As the vehicle moves closer to the obstacle, the display will show the single arc moving closer to the vehicle and the tone will change from fast to continuous.

In general, the car is closest to the obstacle when the display shows only a flashing arc and the chime becomes continuous.

The color on the display depends on the distance and location of the obstacle.

Enabling And Disabling ParkSense

ParkSense can be enabled and disabled with the ParkSense switch.

When the ParkSense switch is pushed to disable the system, the instrument cluster will display the "PARKSENSE OFF" message for approximately five seconds. Refer to "Instrument Cluster Display" in "Getting To Know Your Instrument Panel" for further information. When the gear selector is moved to REVERSE and the system is disabled, the instrument cluster display will show the "PARKSENSE OFF" message for as long as the vehicle is in REVERSE.

The ParkSense switch LED will be on when ParkSense is disabled or requires service. The ParkSense switch LED will be off when the system is enabled. If the

ParkSense switch is pushed, and requires service, the ParkSense switch LED will blink momentarily, and then the LED will be on.

ParkSense will remember the previous state when the vehicle is switch off.

CAUTION!

After turning the ignition to STOP, the ParkSense remains in this setting until the next key cycle. This is true even in the case of changing the ignition from RUN to STOP, and then again to RUN.

Service The Rear Park Assist System

During vehicle start up, when the ParkSense Rear Park Assist System has detected a faulted condition, the instrument cluster will actuate a single chime, once per ignition cycle, and it will display a dedicated message such as "PARK ASSIST UNAVAILABLE WIPE REAR SENSORS" or the "PARK ASSIST UNAVAILABLE SERVICE REQUIRED" message. Refer to "Instrument Cluster Display" in "Getting To Know Your Instrument Panel" for further information. When the gear selector is moved to REVERSE and the system has detected a faulted condition, the instrument cluster display will display a dedicated message such as "PARK ASSIST UNAVAILABLE WIPE REAR SENSORS" or "PARKSENSE UNAVAILABLE SERVICE REQUIRED" message for as long as the vehicle is in REVERSE. Under this condition, Rear Park Assist will not operate.

If a message such as "PARK ASSIST UNAVAILABLE WIPE REAR SENSORS" appears in the instrument cluster display, make sure the outer surface and the underside of the rear fascia/bumper is clean and clear of snow, ice, mud, dirt or other obstructions, and then cycle the ignition. If the message continues to appear, see an authorized dealer.

If a message such as "PARK ASSIST UNAVAILABLE SERVICE REQUIRED" appears in the instrument cluster display, see an authorized dealer.

ParkSense System Usage Precautions

NOTE:

- Ensure that the outer surface and the underside of the rear bumper is clean and clear of snow, ice, mud, dirt or other obstruction to keep the Rear ParkSense system operating properly.
- Jackhammers, large trucks, and other vibrations could affect the performance of Rear ParkSense.

- Clean the Rear ParkSense sensors regularly, taking care not to scratch or damage them. The sensors must not be covered with ice, snow, slush, mud, dirt or debris. Failure to do so can result in the system not working properly. The Rear ParkSense system might not detect an obstacle behind the fascia/bumper, or it could provide a false indication that an obstacle is behind the fascia/bumper.
- Objects such as bicycle carriers, etc., must not be placed within 12 inches (30 cm) from the rear fascia/bumper while driving the vehicle. Failure to do so can result in the system misinterpreting a close object as a sensor problem, causing a failure indication to be displayed in the instrument cluster.

WARNING!

- **Drivers must be careful when backing up even when using ParkSense. Always check carefully behind your vehicle, look behind you, and be sure to check for pedestrians, animals, other vehicles, obstructions, and blind spots before backing up. You are responsible for safety and must continue to pay attention to your surroundings.**

(Continued)

WARNING! ***(Continued)***

Failure to do so can result in serious injury or death.

- **Before using ParkSense, it is strongly recommended that the ball mount and hitch ball assembly is disconnected from the vehicle when the vehicle is not used for towing. Failure to do so can result in injury or damage to vehicles or obstacles because the hitch ball will be much closer to the obstacle than the rear fascia when the loudspeaker sounds the continuous tone. Also, the sensors could detect the ball mount and hitch ball assembly, depending on its size and shape, giving a false indication that an obstacle is behind the vehicle.**

CAUTION!

- **ParkSense is only a parking aid and it is unable to recognize every obstacle, including small obstacles. Parking curbs might be temporarily detected or not detected at all. Obstacles located**

(Continued)

CAUTION! ***(Continued)***

above or below the sensors will not be detected when they are in close proximity.

- **The vehicle must be driven slowly when using ParkSense in order to be able to stop in time when an obstacle is detected. It is recommended that the driver looks over his/her shoulder when using ParkSense.**

If it's necessary to keep the trailer hitch and hitch ball assembly mounted for a long period, it is possible to filter out the trailer hitch and hitch ball assembly presence in sensor field of view. The filtering operation must be performed only by an authorized dealer.

LANESENSE — IF EQUIPPED

LaneSense Operation

The LaneSense system is operational at speeds above 37 mph (60 km/h) and below 112 mph (180 km/h). The LaneSense system uses a forward looking camera to detect lane markings and measure vehicle position within the lane boundaries.

When both lane markings are detected and the driver unintentionally drifts out of the lane (no turn signal applied), the LaneSense system provides a haptic warning in the form of torque applied to the steering wheel to prompt the driver to remain within the lane boundaries. If the driver continues to unintentionally drift out of the lane, the LaneSense system provides a visual warning through the instrument cluster display to prompt the driver to remain within the lane boundaries.

The driver may manually override the haptic warning by applying torque into the steering wheel at any time.

When only a single lane marking is detected and the driver unintentionally drifts across the lane marking (no turn signal applied), the LaneSense system provides a visual warning through the instrument cluster display to prompt the driver to remain within the lane. When only a single lane marking is detected, a haptic (torque) warning will not be provided.

NOTE: When operating conditions have been met, the LaneSense system will monitor if the driver's hands are on the steering wheel and provides an audible warning to the driver when the driver's hands are not detected on the steering wheel. The system will cancel if the driver does not return their hands to the wheel.

Turning LaneSense On Or Off

The default status of LaneSense is “off”.

The LaneSense button is located on the end of the turn signal stalk, located on the left side of the steering column.

To turn the LaneSense system on, push the LaneSense button once. A “Lane Sense On” message is shown in the instrument cluster display.

To turn the LaneSense system off, push the LaneSense button once.

NOTE: The LaneSense system will retain the last system state on or off from the last ignition cycle when the ignition is changed to RUN mode.

LaneSense Warning Message

The LaneSense system will indicate the current lane drift condition through the instrument cluster display.

Base Instrument Cluster Display

When the LaneSense system is on, the lane lines are gray when both of the lane boundaries have not been detected and the LaneSense indicator is solid white.

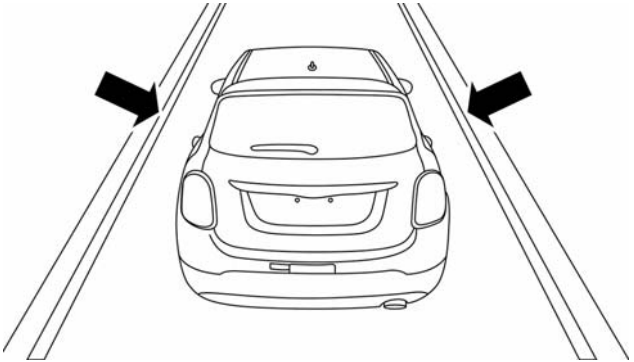

System On (Gray Lines/White Indicator)

Left Lane Departure — Only Left Lane Detected

- When the LaneSense system is on, the LaneSense indicator is solid white when only the left lane marking has been detected and the system is ready to provide visual warnings in the instrument cluster display if an unintentional lane departure occurs.
- When the LaneSense system senses the lane has been approached and is in a lane departure situation, the left thick lane line flashes yellow (on/off), the left thin line remains solid yellow and the LaneSense indicator changes from solid white to flashing yellow.

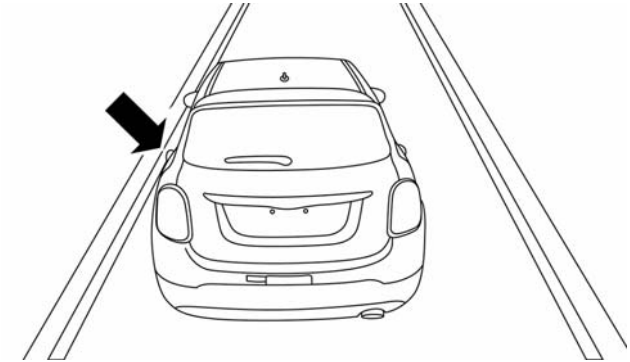

Lane Approached (Flashing Yellow Thick Line, Solid Yellow Thin Line/Flashing Yellow Indicator)

NOTE: The LaneSense system operates with the similar behavior for a right lane departure when only the right lane marking has been detected.

Left Lane Departure — Both Lanes Detected

- When the LaneSense system is on, the lane lines turn from gray to white to indicate that both of the lane markings have been detected. The LaneSense indicator is solid green when both lane markings have been detected and the system is "armed" to provide visual warnings in the instrument cluster display and a torque warning in the steering wheel if an unintentional lane departure occurs.

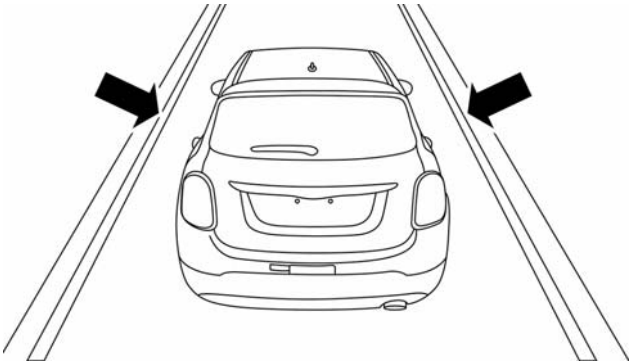

Lanes Sensed (White Lines/Green Indicator)

- When the LaneSense system senses a lane drift situation, the left thick lane line and left thin line turn solid yellow. The LaneSense indicator changes from solid green to solid yellow. At this time torque is applied to the steering wheel in the opposite direction of the lane boundary.
- For example: If approaching the left side of the lane the steering wheel will turn to the right.

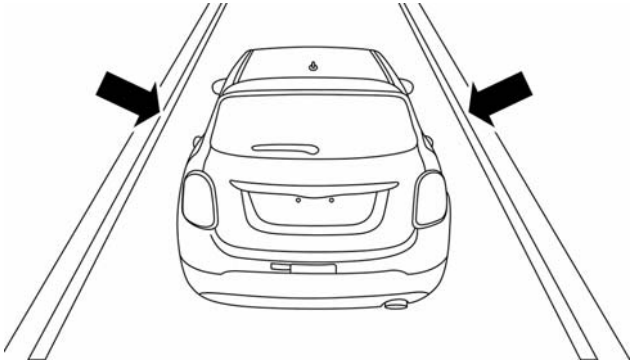

Lane Sensed (Solid Yellow Thick Line, Solid Yellow Thin Line/Solid Yellow Indicator)

- When the LaneSense system senses the lane has been approached and is in a lane departure situation, the left thick lane line flashes yellow (on/off) and the left thin line remains solid yellow. The LaneSense indicator changes from solid yellow to flashing yellow. At this time torque is applied to the steering wheel in the opposite direction of the lane boundary.
- For example: If approaching the left side of the lane the steering wheel will turn to the right.

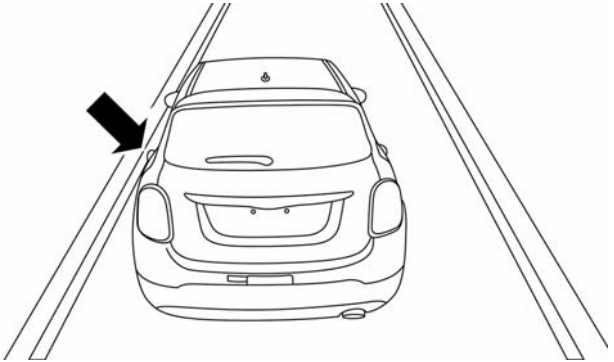

Lane Approached (Flashing Yellow Thick Line, Solid Yellow Thin Line/Flashing Yellow Indicator)

NOTE: The LaneSense system operates with the similar behavior for a right lane departure.

Changing LaneSense Status

The LaneSense system has settings to adjust the intensity of the torque warning and the warning zone sensitivity (early/late) that you can configure through the Uconnect system screen. Refer to “Uconnect Settings” in “Multimedia” for further information.

NOTE:

- When enabled the system operates above 37 mph (60 km/h) and below 112 mph (180 km/h).
- Use of the turn signal suppresses the warnings.
- The system will not apply torque to the steering wheel whenever a safety system engages. (anti-lock brakes, traction control system, electronic stability control, forward collision warning, etc.).

PARKVIEW REAR BACK UP CAMERA — IF EQUIPPED

The ParkView Rear Back Up Camera that allows you to see an on-screen image of your vehicle's rear surroundings when the gear selector is put into REVERSE. The image will be displayed on the touchscreen display along with a note to "check entire surroundings" across the top of the screen. After five seconds this note will disappear. The ParkView camera is located above the rear license plate.

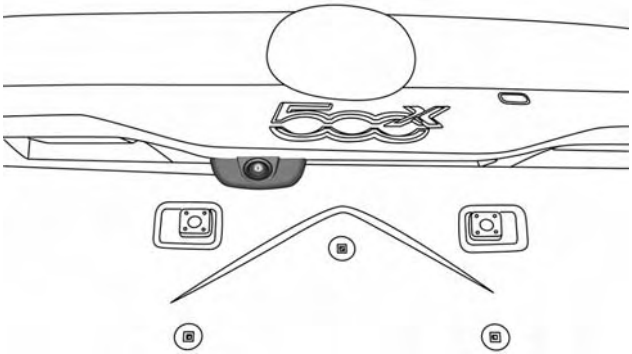

Parking Camera

When the vehicle is shifted out of REVERSE (with camera delay turned off), the rear camera mode is exited and the navigation or audio screen appears again.

When the vehicle is shifted out of REVERSE (with camera delay turned on), the camera image will continue to be displayed for up to 10 seconds after shifting out of REVERSE unless the vehicle speed exceeds 8 mph (13 km/h), the vehicle is shifted into PARK or the ignition is switched to STOP mode.

A touchscreen button to disable the camera is available when the vehicle is not in REVERSE. Display of the camera image after shifting out of REVERSE can be disabled via Uconnect Settings.

When enabled, active guide lines are overlaid on the image to illustrate the width of the vehicle and its projected backup path based on the steering wheel position.

When enabled, fixed guide lines are overlaid on the image to illustrate the width of the vehicle.

Different colored zones indicate the distance to the rear of the vehicle.

The following table shows the approximate distances for each zone:

Zone	Distance To The Rear Of The Vehicle
Red	0 - 1 ft (0 - 30 cm)
Yellow	1 ft - 3 ft (30 cm - 1 m)
Green	3 ft or greater (1 m or greater)

NOTE: If snow, ice, mud, or any foreign substance builds up on the camera lens, clean the lens, rinse with water, and dry with a soft cloth. Do not cover the lens.

WARNING!

Drivers must be careful when backing up even when using the ParkView Rear Back Up Camera. Always check carefully behind your vehicle, and be

(Continued)

WARNING! ***(Continued)***

sure to check for pedestrians, animals, other vehicles, obstructions, or blind spots before backing up. You are responsible for the safety of your surroundings and must continue to pay attention while backing up. Failure to do so can result in serious injury or death.

CAUTION!

- **To avoid vehicle damage, ParkView should only be used as a parking aid. The ParkView camera is unable to view every obstacle or object in your drive path.**
- **To avoid vehicle damage, the vehicle must be driven slowly when using ParkView to be able to stop in time when an obstacle is seen. It is recommended that the driver look frequently over his/her shoulder when using ParkView.**

TIRE PRESSURE MONITORING SYSTEM (TPMS)

The Tire Pressure Monitor System (TPMS) will warn the driver of a low tire pressure based on the vehicle recommended cold tire pressure.

The tire pressure will vary with temperature by about 1 psi (7 kPa) for every 12° F (6.5° C). This means that when the outside temperature decreases, the tire pressure will decrease. Tire pressure should always be set based on cold inflation tire pressure. This is defined as the tire pressure after the vehicle has not been driven for at least three hours, or driven less than 1 mile (1.6 km) after a three hour period. The cold tire inflation pressure must not exceed the maximum inflation pressure molded into the tire sidewall. Refer to "Tires – General Information" in "Maintaining And Caring For Your Vehicle" for information on how to properly inflate the vehicle's tires. The tire pressure will also increase as the vehicle is driven, this is normal and there should be no adjustment for this increased pressure.

The TPMS will warn the driver of a low tire pressure if the tire pressure falls below the low pressure warning limit for any reason, including low temperature effects, or natural pressure loss through the tire.

The TPMS will continue to warn the driver of low tire pressure as long as the condition exists, and will not turn off until the tire pressure is at or above the recommended cold tire pressure on the placard. Once the low tire pressure warning (Tire Pressure Monitoring Telltale Light) illuminates, you must increase the tire pressure to the recommended cold tire pressure in order for the Tire Pressure Monitoring Telltale Light to turn off. The system will automatically update and the Tire Pressure Monitoring Telltale Light will turn off once the system receives the updated tire pressures. The vehicle

may need to be driven for up to 20 minutes above 15 mph (24 km/h) in order for the TPMS to receive this information.

For example, your vehicle may have a recommended cold (parked for more than three hours) tire pressure of 30 psi (207 kPa). If the ambient temperature is 68° F (20° C) and the measured tire pressure is 27 psi (186 kPa), a temperature drop to 20° F (-7° C) will decrease the tire pressure to approximately 23 psi (159 kPa). This tire pressure is sufficiently low enough to turn on the Tire Pressure Monitoring Telltale Light. Driving the vehicle may cause the tire pressure to rise to approximately 27 psi (186 kPa), but the Tire Pressure Monitoring Telltale Light will still be on. In this situation, the Tire Pressure Monitoring Telltale Light will turn off only after the tires are inflated to the vehicle's recommended cold tire pressure value.

CAUTION!

- **The TPMS has been optimized for the original equipment tires and wheels. TPMS pressures and warnings have been established for the tire size equipped on your vehicle. Undesirable system**

(Continued)

CAUTION! ***(Continued)***

operation or sensor damage may result when using replacement equipment that is not of the same size, type, and/or style. Aftermarket wheels can cause sensor damage. Using aftermarket tire sealants may cause the Tire Pressure Monitoring System (TPMS) sensor to become inoperable. After using an aftermarket tire sealant it is recommended that you take your vehicle to an authorized dealership to have your sensor function checked.

- **After inspecting or adjusting the tire pressure, always reinstall the valve stem cap. This will prevent moisture and dirt from entering the valve stem, which could damage the Tire Pressure Monitoring Sensor.**

NOTE:

- The TPMS is not intended to replace normal tire care and maintenance, or to provide warning of a tire failure or condition.
- The TPMS should not be used as a tire pressure gauge while adjusting your tire pressure.

- Driving on a significantly under-inflated tire causes the tire to overheat and can lead to tire failure. Under-inflation also reduces fuel efficiency and tire tread life, and may affect the vehicle's handling and stopping ability.
- The TPMS is not a substitute for proper tire maintenance, and it is the driver's responsibility to maintain correct tire pressure using an accurate tire gauge, even if under-inflation has not reached the level to trigger illumination of the Tire Pressure Monitoring Telltale Light.
- Seasonal temperature changes will affect tire pressure, and the TPMS will monitor the actual tire pressure in the tire.

Base System

This is the TPMS warning indicator located in the instrument cluster.

The TPMS uses wireless technology with wheel rim mounted electronic sensors to monitor tire pressure levels. Sensors, mounted to each wheel as part of the valve stem, transmit tire pressure readings to the Receiver Module.

NOTE: It is particularly important for you to check the tire pressure in all of the tires on your vehicle regularly and to maintain the proper pressure.

The TPMS consists of the following components:

- Receiver Module.
- Four Tire Pressure Monitoring Sensors.
- Tire Pressure Monitoring Telltale Light.

Tire Pressure Monitoring Low Pressure Warnings

The Tire Pressure Monitoring Telltale Light will illuminate in the instrument cluster, an acoustic signal will be activated, and the "Check left or right front/rear tire" text message will display when one or more of the four active road tire pressures are low. Should this occur, you should stop as soon as possible, check the inflation pressure of each tire on your vehicle, and inflate each tire to the vehicle's recommended cold placard pressure value. The system will automatically update and the Tire Pressure Monitoring Light will extinguish once the updated tire pressures have been received. The vehicle may need to be driven for up to 20 minutes above 15 mph (24 km/h) to receive this information.

Check TPMS Warnings

The Tire Pressure Monitoring Telltale Light will flash on and off for 75 seconds and remain on solid when a system fault is detected, an audible chime will be activated and the "Service Tire Pressure Monitoring System" text message will display. If the ignition is cycled, this sequence will repeat providing the system fault still exists. The Tire Pressure Monitoring Telltale Light will turn off when the fault condition no longer exists. A system fault can occur with any of the following scenarios:

- Jamming due to electronic devices or driving next to facilities emitting the same radio frequencies as the TPM sensors.
- Installing some form of aftermarket window tinting that affects radio wave signals.
- Snow or ice around the wheels or wheel housings.
- Using tire chains on the vehicle.
- Using wheels/tires not equipped with TPM sensors.

NOTE: Your vehicle may be equipped with a compact spare wheel and tire assembly.

- The compact spare tire does not have a tire pressure monitoring sensor. Therefore, the TPMS will not monitor the tire pressure in the compact spare tire.
- If you install the compact spare tire in place of a road tire that has a pressure below the low-pressure warning limit, upon the next ignition cycle, a chime will sound and the Tire Pressure Monitoring Telltale Light will still turn ON due to the low tire.
- However, after driving the vehicle for up to 20 minutes above 15 mph (24 km/h), the Tire Pressure Monitoring Telltale Light will flash on and off for 75 seconds and then remain on solid.
- This occurs for each subsequent ignition cycle, a chime will sound and the Tire Pressure Monitoring Telltale Light will flash on and off for 75 seconds and then remain on solid.
- Once you repair or replace the original road tire and reinstall it on the vehicle in place of the compact spare tire, the TPMS will update automatically and the Tire Pressure Monitoring Telltale Light will turn OFF, as long as no tire pressure is below the low-pressure warning limit in any of the four active road

tires. The vehicle may need to be driven for up to 20 minutes above 15 mph (24 km/h) in order for the TPMS to receive this information.

General Information

The following regulatory statement applies to all radio frequency (RF) devices equipped in this vehicle:

This device complies with Part 15 of the FCC Rules and with Industry Canada license-exempt RSS standard(s). Operation is subject to the following two conditions:

(1) This device may not cause harmful interference, and

(2) This device must accept any interference received, including interference that may cause undesired operation.

NOTE: Changes or modifications not expressly approved by the party responsible for compliance could void the user's authority to operate the equipment.

FUEL REQUIREMENTS

1.4L Turbo Engine

This engine is designed to meet all emission regulations and provide satisfactory fuel economy and performance when using high-quality unleaded "regular" gasoline having an octane rating of 87 using the (R+M)/2 method. For optimum performance and fuel economy the use of 91 octane or higher is recommended.

While operating on gasoline with an octane number of 87, hearing a light knocking sound from the engine is not a cause for concern. However, if the engine is heard making a heavy knocking sound, see your dealer immediately. Use of gasoline with an octane number lower than 87 can cause engine failure and may void or not be covered by the New Vehicle Limited Warranty.

Poor quality gasoline can cause problems such as hard starting, stalling, and hesitations. If you experience these symptoms, try another brand of gasoline before considering service for the vehicle.

2.4L Engine

All available gasoline engines are designed to meet all emissions regulations and provide excellent fuel economy and performance when using high quality unleaded "regular" gasoline having a octane rating of 87 using the (R+M)/2 method. The use of premium gasoline is not recommended, as it will not provide any benefit over regular gasoline in these engines.

While operating on gasoline with an octane number of 87, hearing a light knocking sound from the engine is not a cause for concern. However, if the engine is heard making a heavy knocking sound, see your dealer immediately. Use of gasoline with an octane number lower than 87 can cause engine failure and may void or not be covered by the New Vehicle Limited Warranty.

Poor quality gasoline can cause problems such as hard starting, stalling, and hesitations. If you experience these symptoms, try another brand of gasoline before considering service for the vehicle.

Reformulated Gasoline

Many areas of the country require the use of cleaner burning gasoline referred to as "Reformulated Gasoline". Reformulated gasoline contains oxygenates and are specifically blended to reduce vehicle emissions and improve air quality.

The use of reformulated gasoline is recommended. Properly blended reformulated gasoline will provide improved performance and durability of engine and fuel system components.

Gasoline/Oxygenate Blends

Some fuel suppliers blend unleaded gasoline with oxygenates such as ethanol.

CAUTION!

DO NOT use gasoline containing methanol or gasoline containing more than 15% ethanol (E-15). Use of these blends may result in starting and drivability problems, damage critical fuel system components, cause emissions to exceed the applicable standard, and/or cause the "Malfunction Indicator

(Continued)

CAUTION! *(Continued)*

Light" to illuminate. Please observe pump labels as they should clearly communicate if a fuel contains greater than 15% ethanol (E-15).

Problems that result from using gasoline containing more than 15% ethanol (E-15) or gasoline containing methanol are not the responsibility of the manufacturer and may void or not be covered under New Vehicle Limited Warranty.

E-85 Usage In Non-Flex Fuel Vehicles

Non-Flex Fuel Vehicles (FFV) are compatible with gasoline containing up to 15% ethanol (E-15). Gasoline with higher ethanol content may void the New Vehicle Limited Warranty.

If a Non-FFV vehicle is inadvertently fueled with E-85 fuel, the engine will have some or all of these symptoms:

- Operate in a lean mode.
- OBD II "Malfunction Indicator Light" on.
- Poor engine performance.
- Poor cold start and cold drivability.
- Increased risk for fuel system component corrosion.

CNG And LP Fuel System Modifications

Modifications that allow the engine to run on compressed natural gas (CNG) or liquid propane (LP) may result in damage to the engine, emissions, and fuel system components. Problems that result from running CNG or LP are not the responsibility of the manufacturer and may void or not be covered under the New Vehicle Limited Warranty.

MMT In Gasoline

Methylcyclopentadienyl Manganese Tricarbonyl (MMT) is a manganese-containing metallic additive that is blended into some gasoline to increase octane. Gasoline blended with MMT provides no performance advantage beyond gasoline of the same octane number without MMT. Gasoline blended with MMT reduces spark plug life and reduces emissions system performance in some vehicles. The manufacturer recommends that gasoline without MMT be used in your vehicle. The MMT content of gasoline may not be indicated on the gasoline pump, therefore, you should ask your gasoline retailer whether the gasoline contains MMT. MMT is prohibited in Federal and California reformulated gasoline.

Materials Added To Fuel

Besides using unleaded gasoline with the proper octane rating, gasolines that contain detergents, corrosion, and stability additives are recommended. Using gasolines that have these additives will help improve fuel economy, reduce emissions, and maintain vehicle performance.

Designated TOP TIER Detergent Gasoline contains a higher level of detergents to further aide in minimizing engine and fuel system deposits. When available, the usage of Top Tier Detergent gasoline is recommended. Visit www.toptiergas.com for a list of TOP TIER Detergent Gasoline Retailers.

Indiscriminate use of fuel system cleaning agents should be avoided. Many of these materials intended for gum and varnish removal may contain active solvents or similar ingredients. These can harm fuel system gasket and diaphragm materials.

Fuel System Cautions

CAUTION!

Follow these guidelines to maintain your vehicle's performance:

- **The use of leaded gasoline is prohibited by Federal law. Using leaded gasoline can impair engine performance and damage the emissions control system.**
- **An out-of-tune engine or certain fuel or ignition malfunctions can cause the catalytic converter to overheat. If you notice a pungent burning odor or some light smoke, your engine may be out of tune or malfunctioning and may require immediate service. Contact your authorized dealer for service assistance.**
- **The use of fuel additives, which are now being sold as octane enhancers, is not recommended. Most of these products contain high concentrations of methanol. Fuel system damage or vehicle performance problems resulting from the use of such fuels or additives is not the responsibility of the manufacturer and may void or not be covered under the New Vehicle Limited Warranty.**

NOTE: Intentional tampering with the emissions control system can result in civil penalties being assessed against you.

Carbon Monoxide Warnings

WARNING!

Carbon monoxide (CO) in exhaust gases is deadly. Follow the precautions below to prevent carbon monoxide poisoning:

- **Do not inhale exhaust gases. They contain carbon monoxide, a colorless and odorless gas, which can kill. Never run the engine in a closed area, such as a garage, and never sit in a parked vehicle with the engine running for an extended period. If the vehicle is stopped in an open area with the engine running for more than a short period, adjust the ventilation system to force fresh, outside air into the vehicle.**
- **Guard against carbon monoxide with proper maintenance. Have the exhaust system inspected every time the vehicle is raised. Have any abnormal conditions repaired promptly. Until repaired, drive with all side windows fully open.**

ADDING FUEL

The Capless Fuel System uses a flapper placed at the filler pipe of the fuel tank; it opens and closes automatically upon insertion/extraction of the fuel nozzle.

The Capless Fuel System is designed so that it prevents the filling of an incorrect type of fuel.

Opening The Door

For filling, proceed as follows:

1. Open the door, by pushing and releasing on the indentation point indicated by the arrow.

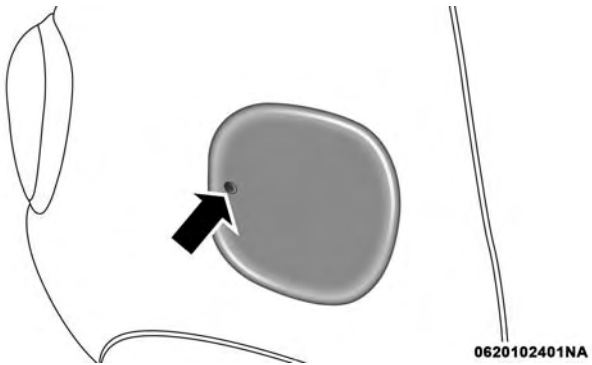

Fuel Filler Door

2. Insert the fuel nozzle in the filler pipe and proceed with filling the fuel tank.

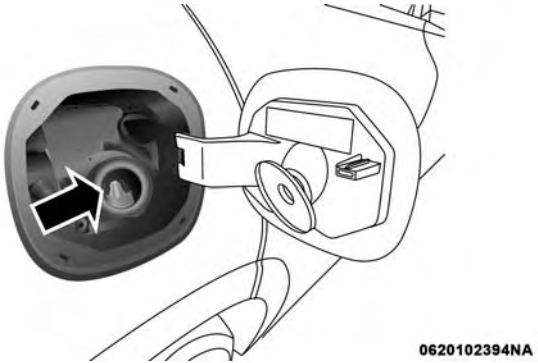

Filler Pipe

3. Before removing the nozzle, wait at least 10 seconds to allow the fuel to flow inside of the tank.
4. Pull the nozzle from the filler pipe and then close the door.

Emergency Refueling Procedure

If the vehicle is out of fuel, proceed as follows:

1. Open the liftgate and remove the emergency fuel fill funnel located in the cargo area.

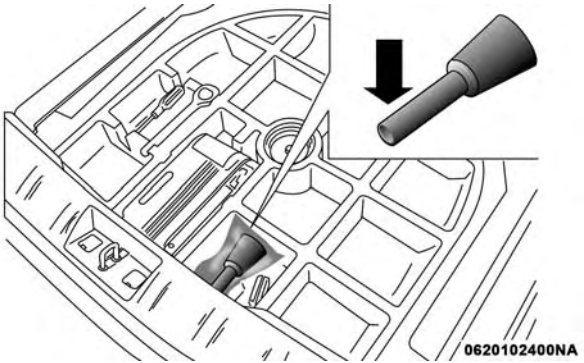

Emergency Fuel Fill Funnel

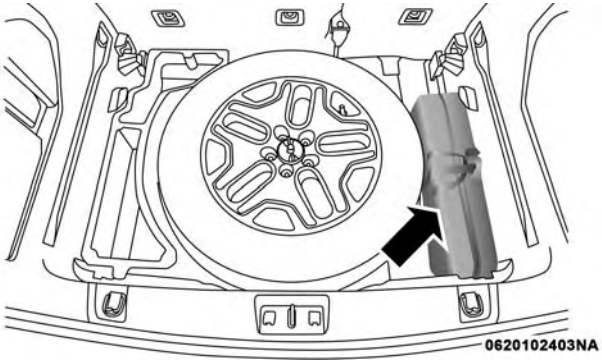

Emergency Fuel Fill Funnel — If Equipped With Full Size Spare Tire

2. Open the fuel door.
3. Insert the emergency fuel fill funnel in the filler pipe and proceed to fill the fuel tank.

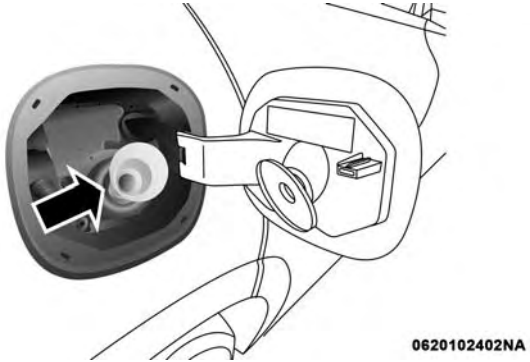

Fueling With Emergency Fuel Fill Funnel

4. Remove the emergency fuel fill funnel, and close the door.
5. Store the emergency fuel fill funnel in the cargo area.

WARNING!

- **Do not affix objects/plugs to the end of the filler neck other than is provided on the car.**
- **The use of objects/plugs do not comply with the vehicle and may cause pressure increases inside the tank, creating dangerous conditions.**
- **Do not approach the neck of the tank with open flames or lit cigarettes its an extreme fire hazard. Also, avoid close contact with the filler pipe with your face, do not inhale harmful vapors.**
- **Do not use your mobile phone in the vicinity of the pump fuel nozzle, it can be a possible risk of fire.**

VEHICLE LOADING

Certification Label

As required by National Highway Traffic Safety Administration regulations, your vehicle has a certification label affixed to the driver's side door or pillar.

This label contains the month and year of manufacture, Gross Vehicle Weight Rating (GVWR), Gross Axle Weight Rating (GAWR) front and rear, and Vehicle Identification Number (VIN). A Month-Day-Hour (MDH) number is included on this label and indicates the Month, Day and Hour of manufacture. The bar code that appears on the bottom of the label is your VIN.

Gross Vehicle Weight Rating (GVWR)

The GVWR is the total permissible weight of your vehicle including driver, passengers, vehicle, options and cargo. The label also specifies maximum capacities of front and rear axle systems (GAWR). Total load must be limited so GVWR and front and rear GAWR are not exceeded.

Payload

The payload of a vehicle is defined as the allowable load weight a truck can carry, including the weight of the driver, all passengers, options and cargo.

Gross Axle Weight Rating (GAWR)

The GAWR is the maximum permissible load on the front and rear axles. The load must be distributed in the cargo area so that the GAWR of each axle is not exceeded.

Each axle GAWR is determined by the components in the system with the lowest load carrying capacity (axle, springs, tires or wheels). Heavier axles or suspension

components sometimes specified by purchasers for increased durability does not necessarily increase the vehicle's GVWR.

Tire Size

The tire size on the Vehicle Certification Label represents the actual tire size on your vehicle. Replacement tires must be equal to the load capacity of this tire size.

Rim Size

This is the rim size that is appropriate for the tire size listed.

Inflation Pressure

This is the cold tire inflation pressure for your vehicle for all loading conditions up to full GAWR.

Curb Weight

The curb weight of a vehicle is defined as the total weight of the vehicle with all fluids, including vehicle fuel, at full capacity conditions, and with no occupants or cargo loaded into the vehicle. The front and rear curb weight values are determined by weighing your vehicle on a commercial scale before any occupants or cargo are added.

Loading

The actual total weight and the weight of the front and rear of your vehicle at the ground can best be determined by weighing it when it is loaded and ready for operation.

The entire vehicle should first be weighed on a commercial scale to insure that the GVWR has not been exceeded. The weight on the front and rear of the vehicle should then be determined separately to be sure that the load is properly distributed over the front and rear axle. Weighing the vehicle may show that the GAWR of either the front or rear axles has been exceeded but the total load is within the specified GVWR. If so, weight must be shifted from front to rear or rear to front as appropriate until the specified weight limitations are met. Store the heavier items down low and be sure that the weight is distributed equally. Stow all loose items securely before driving.

Improper weight distributions can have an adverse effect on the way your vehicle steers and handles and the way the brakes operate.

CAUTION!

Do not load your vehicle any heavier than the GVWR or the maximum front and rear GAWR. If you do, parts on your vehicle can break, or it can change the way your vehicle handles. This could cause you to lose control. Also overloading can shorten the life of your vehicle.

DRIVING ON SLIPPERY SURFACES

Acceleration

Rapid acceleration on snow covered, wet, or other slippery surfaces may cause the driving wheels to pull erratically to the right or left. This phenomenon occurs when there is a difference in the surface traction under the front (driving) wheels.

WARNING!

Rapid acceleration on slippery surfaces is dangerous. Unequal traction can cause sudden pulling of the front wheels. You could lose control of the vehicle and possibly have a collision. Accelerate slowly and carefully whenever there is likely to be poor traction (ice, snow, wet, mud, loose sand, etc.).

Traction

When driving on wet or slushy roads, it is possible for a wedge of water to build up between the tire and road surface. This is hydroplaning and may cause partial or complete loss of vehicle control and stopping ability. To reduce this possibility, the following precautions should be observed:

1. Slow down during rainstorms or when the roads are slushy.
2. Slow down if the road has standing water or puddles.

3. Replace the tires when tread wear indicators first become visible.
4. Keep tires properly inflated.
5. Maintain sufficient distance between your vehicle and the vehicle in front of you to avoid a collision in a sudden stop.

DRIVING THROUGH WATER

Driving through water more than a few inches/centimeters deep will require extra caution to ensure safety and prevent damage to your vehicle.

Flowing/Rising Water

WARNING!

Do not drive on or across a road or path where water is flowing and/or rising (as in storm run-off). Flowing water can wear away the road or path's surface and cause your vehicle to sink into deeper water. Furthermore, flowing and/or rising water can carry your vehicle away swiftly. Failure to follow this warning may result in injuries that are serious or fatal to you, your passengers, and others around you.

Shallow Standing Water

Although your vehicle is capable of driving through shallow standing water, consider the following Cautions and Warnings before doing so.

WARNING!

- **Driving through standing water limits your vehicle's traction capabilities. Do not exceed 5 mph (8 km/h) when driving through standing water.**
- **Driving through standing water limits your vehicle's braking capabilities, which increases stopping distances. Therefore, after driving through standing water, drive slowly and lightly press on the brake pedal several times to dry the brakes.**
- **Failure to follow these warnings may result in injuries that are serious or fatal to you, your passengers, and others around you.**

CAUTION!

- **Always check the depth of the standing water before driving through it. Never drive through standing water that is deeper than the bottom of the tire rims mounted on the vehicle.**
- **Determine the condition of the road or the path that is under water and if there are any obstacles in the way before driving through the standing water.**
- **Do not exceed 5 mph (8 km/h) when driving through standing water. This will minimize wave effects.**
- **Driving through standing water may cause damage to your vehicle's drivetrain components. Always inspect your vehicle's fluids (i.e., engine oil, transmission, axle, etc.) for signs of contamination (i.e., fluid that is milky or foamy in appearance) after driving through standing water. Do not continue to operate the vehicle if any fluid appears contaminated, as this may result in further damage. Such damage is not covered by the New Vehicle Limited Warranty.**

(Continued)

CAUTION! ***(Continued)***

- **Getting water inside your vehicle's engine can cause it to lock up and stall out, and cause serious internal damage to the engine. Such damage is not covered by the New Vehicle Limited Warranty.**

POWER STEERING

The electric power steering system will give you good vehicle response and increased ease of maneuverability in tight spaces. The system will vary its assist to provide light efforts while parking and good feel while driving. If the electric steering system experiences a fault that reduces assist or prevents the vehicle from providing assist, you will still have the ability to steer the vehicle manually.

WARNING!

Continued operation with reduced assist could pose a safety risk to yourself and others. Service should be obtained as soon as possible.

If the “SERVICE POWER STEERING” OR ”POWER STEERING ASSIST OFF - SERVICE SYSTEM” message and a steering wheel icon are displayed on the instrument cluster screen, it indicates that the vehicle needs to be taken to the dealer for service. It is likely the vehicle has lost power steering assistance. Refer to “Instrument Cluster Display” in “Getting To Know Your Instrument Panel” for further information.

NOTE:

- Even if the power steering assistance is no longer operational, it is still possible to steer the vehicle. Under these conditions there will be a substantial increase in steering effort, especially at low speeds and during parking maneuvers.
- If the condition persists, see your authorized dealer for service.

TRAILER TOWING

In this section you will find safety tips and information on limits to the type of towing you can reasonably do with your vehicle. Before towing a trailer, carefully review this information to tow your load as efficiently and safely as possible.

To maintain the New Vehicle Limited Warranty coverage, follow the requirements and recommendations in this manual concerning vehicles used for trailer towing.

Common Towing Definitions

The following trailer towing related definitions will assist you in understanding the following information:

Gross Vehicle Weight Rating (GVWR)

The GVWR is the total allowable weight of your vehicle. This includes driver, passengers, cargo and tongue weight. The total load must be limited so that you do not exceed the GVWR. Refer to “Vehicle Loading/ Vehicle Certification Label” in “Starting And Operating” for further information.

Gross Trailer Weight (GTW)

The GTW is the weight of the trailer plus the weight of all cargo, consumables and equipment (permanent or temporary) loaded in or on the trailer in its ”loaded and ready for operation” condition.

The recommended way to measure GTW is to put your fully loaded trailer on a vehicle scale. The entire weight of the trailer must be supported by the scale.

Gross Combination Weight Rating (GCWR)

The GCWR is the total allowable weight of your vehicle and trailer when weighed in combination.

Gross Axle Weight Rating (GAWR)

The GAWR is the maximum capacity of the front and rear axles. Distribute the load over the front and rear axles evenly. Make sure that you do not exceed either front or rear GAWR. Refer to "Vehicle Loading/Vehicle Certification Label" in "Starting And Operating" for further information.

WARNING!

It is important that you do not exceed the maximum front or rear GAWR. A dangerous driving condition can result if either rating is exceeded.

Tongue Weight (TW)

The tongue weight is the downward force exerted on the hitch ball by the trailer. You must consider this as part of the load on your vehicle.

Frontal Area

The frontal area is the maximum height multiplied by the maximum width of the front of a trailer.

Trailer Sway Control — Mechanical

The trailer sway control is a telescoping link that can be installed between the hitch receiver and the trailer tongue that typically provides adjustable friction associated with the telescoping motion to dampen any unwanted trailer swaying motions while traveling.

Weight-Carrying Hitch

A weight-carrying hitch supports the trailer tongue weight, just as if it were luggage located at a hitch ball or some other connecting point of the vehicle. These kinds of hitches are the most popular on the market today and they are commonly used to tow small and medium sized trailers.

Weight-Distributing Hitch

A weight-distributing system works by applying leverage through spring (load) bars. They are typically used for heavier loads to distribute trailer tongue weight to the tow vehicle's front axle and the trailer axle(s). When used in accordance with the manufacturer's directions, it provides for a more level ride, offering more consistent steering and brake control thereby enhancing towing safety. The addition of a friction/hydraulic sway control also dampens sway caused by traffic and crosswinds and contributes positively to tow vehicle and trailer stability. Trailer sway control and a weight distributing (load equalizing) hitch are recommended for heavier Tongue Weights (TW) and may be required depending on vehicle and trailer configuration/loading to comply with Gross Axle Weight Rating (GAWR) requirements.

WARNING!

- **An improperly adjusted Weight Distributing Hitch system may reduce handling, stability, braking performance, and could result in a collision.**
- **Weight Distributing Systems may not be compatible with Surge Brake Couplers. Consult with your hitch and trailer manufacturer or a reputable Recreational Vehicle dealer for additional information.**

Trailer Hitch Classification

The following chart provides the industry standard for the maximum trailer weight a given trailer hitch class can tow and should be used to assist you in selecting the correct trailer hitch for your intended towing condition.

Trailer Hitch Classification Definitions	
Class	**Max. Trailer Hitch Industry Standards**
Class I - Light Duty	2,000 lbs (907 kg)
Class II - Medium Duty	3,500 lbs (1,587 kg)
Class III - Heavy Duty	5,000 lbs (2,267 kg)
Class IV - Extra Heavy Duty	10,000 lbs (4,535 kg)
Refer to the "Trailer Towing Weights (Maximum Trailer Weight Ratings)" chart for the Maximum Gross Trailer Weight (GTW) towable for your given drivetrain.	
All trailer hitches should be professionally installed on your vehicle.	

Trailer Towing Weights (Maximum Trailer Weight Ratings)

The following chart provides the maximum trailer weight ratings towable for your given drivetrain.

1.4L Turbo Engine & 2.4 FWD

Trailer towing is not recommended.

Engine	Max. GTW (Gross Trailer Wt.)	Max. Tongue Wt. (See Note)
2.4L AWD	1,000 lbs (450 kg)	100 lbs (45 kg)
Refer to local laws for maximum trailer towing speeds.		
NOTE: The trailer tongue weight must be considered as part of the combined weight of occupants and cargo and should never exceed the weight referenced on the Tire and Loading Information placard. Refer to "Tire Safety Information" in "Maintaining And Caring For Your Vehicle" for further information.		

Trailer And Tongue Weight

Never exceed the maximum tongue weight stamped on your bumper or trailer hitch.

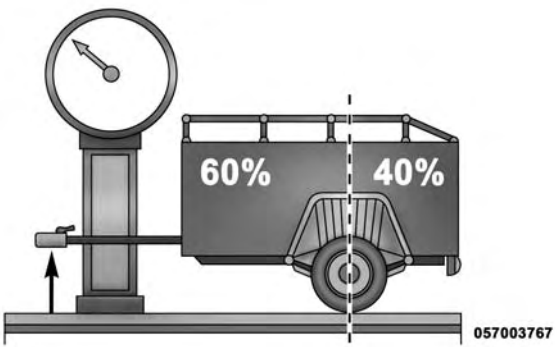

Consider the following items when computing the weight on the rear axle of the vehicle:

- The tongue weight of the trailer.
- The weight of any other type of cargo or equipment put in or on your vehicle.
- The weight of the driver and all passengers.

NOTE: Remember that everything put into or on the trailer adds to the load on your vehicle. Also, additional factory-installed options or dealer-installed options must be considered as part of the total load on your vehicle. Refer to the "Tire And Loading Information" placard for the maximum combined weight of occupants and cargo for your vehicle.

Towing Requirements

To promote proper break-in of your new vehicle drive-train components, the following guidelines are recommended:

WARNING!

Improper towing can lead to a collision. Follow these guidelines to make your trailer towing as safe as possible:

- **Make certain that the load is secured in the trailer and that it will not shift during travel. When trailering cargo that is not fully secured, dynamic load shifts can occur that may be difficult for the driver to control. You could lose control of your vehicle and have a collision.**
- **When hauling cargo, or towing a trailer, do not overload your vehicle or trailer. Overloading can cause a loss of control, poor performance, or damage to brakes, axle, engine, transmission, steering, suspension, chassis structure, or tires.**
- **Safety chains must always be used between your vehicle and trailer. Always connect the chains to the frame or hook retainers of the vehicle hitch. Cross the chains under the trailer tongue and allow enough slack for turning corners.**
- **Vehicles with trailers should not be parked on a grade. When parking, apply the parking brake on the tow vehicle. Put the tow vehicle transmission**

(Continued)

WARNING! *(Continued)*

in PARK. Always block or "chock" the trailer wheels.

- **GCWR must not be exceeded.**
- **Total weight must be distributed between the tow vehicle and the trailer such that the following four ratings are not exceeded:**

  1. GVWR

  2. GTW

  3. GAWR

  4. Tongue weight rating for the trailer hitch utilized.

CAUTION!

- **Do not tow a trailer at all during the first 500 miles (805 km) the new vehicle is driven. The engine, axle or other parts could be damaged.**
- **Then, during the first 500 miles (805 km) that a trailer is towed, do not drive over 50 mph (80 km/h) and do not make starts at full throttle.**

(Continued)

CAUTION! *(Continued)*

This helps the engine and other parts of the vehicle wear in at the heavier loads.

Towing Requirements — Tires

- Do not attempt to tow a trailer while using a compact spare tire.
- Proper tire inflation pressures are essential to the safe and satisfactory operation of your vehicle. Refer to "Tires – General Information" in "Starting And Operating" for proper tire inflation procedures.
- Check the trailer tires for proper tire inflation pressures before trailer usage.
- Check for signs of tire wear or visible tire damage before towing a trailer. Refer to "Tires – General Information" in "Starting And Operating" for the proper inspection procedure.
- When replacing tires, refer to "Tires – General Information" in "Starting And Operating" for the proper tire replacement procedures. Replacing tires with a higher load carrying capacity will not increase the vehicle's GVWR and GAWR limits.

Towing Requirements — Trailer Brakes

- Do **not** interconnect the hydraulic brake system or vacuum system of your vehicle with that of the trailer. This could cause inadequate braking and possible personal injury.
- An electronically actuated trailer brake controller is required when towing a trailer with electronically actuated brakes. When towing a trailer equipped with a hydraulic surge actuated brake system, an electronic brake controller is not required.
- Trailer brakes are recommended for trailers over 1,000 lbs (453 kg) and required for trailers in excess of 2,000 lbs (907 kg).

WARNING!

- **Do not connect trailer brakes to your vehicle's hydraulic brake lines. It can overload your brake system and cause it to fail. You might not have brakes when you need them and could have a collision.**
- **Towing any trailer will increase your stopping distance. When towing you should allow for additional space between your vehicle and the vehicle in front of you. Failure to do so could result in a collision.**

CAUTION!

If the trailer weighs more than 1,000 lbs (453 kg) loaded, it should have its own brakes and they should be of adequate capacity. Failure to do this could lead to accelerated brake lining wear, higher brake pedal effort, and longer stopping distances.

Towing Requirements — Trailer Lights And Wiring (If Equipped)

Whenever you pull a trailer, regardless of the trailer size, stoplights and turn signals on the trailer are required for motoring safety.

The Trailer Tow Package may include a four- and seven-pin wiring harness. Use a factory approved trailer harness and connector.

NOTE: Do not cut or splice wiring into the vehicles wiring harness.

The electrical connections are all complete to the vehicle but you must mate the harness to a trailer connector. Refer to the following illustrations.

NOTE:

- Disconnect trailer wiring connector from the vehicle before launching a boat (or any other device plugged into vehicle's electrical connect) into water.
- Be sure to reconnect after clear from water area.

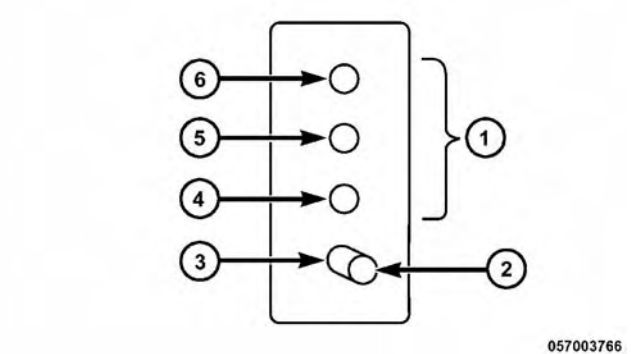

Four-Pin Connector

1 — Female Pins
2 — Male Pin
3 — Ground
4 — Park
5 — Left Stop/Turn
6 — Right Stop/Turn

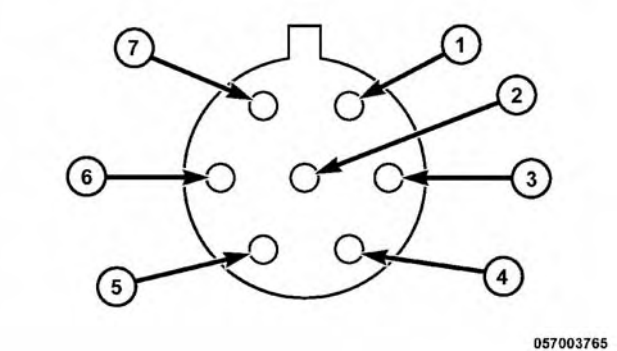

Seven-Pin Connector

1 — Battery
2 — Backup Lamps
3 — Right Stop/Turn
4 — Electric Brakes
5 — Ground
6 — Left Stop/Turn
7 — Running Lamps

Towing Tips

Before setting out on a trip, practice turning, stopping, and backing the trailer in an area located away from heavy traffic.

Automatic Transmission — If Equipped

Select the DRIVE range when towing. The transmission controls include a drive strategy to avoid frequent shifting when towing. However, if frequent shifting does occur while in DRIVE, you can use the AutoStick shift control to manually select a lower gear.

NOTE: Using a lower gear while operating the vehicle under heavy loading conditions will improve performance and extend transmission life by reducing excessive shifting and heat build up. This action will also provide better engine braking.

AutoStick

- When using the AutoStick shift control, select the highest gear that allows for adequate performance and avoids frequent downshifts. For example, choose “5” if the desired speed can be maintained. Choose “4” or “3” if needed to maintain the desired speed.
- To prevent excess heat generation, avoid continuous driving at high RPM. Reduce vehicle speed as necessary to avoid extended driving at high RPM. Return to a higher gear or vehicle speed when grade and road conditions allow.

Speed Control — If Equipped

- Do not use in hilly terrain or with heavy loads.
- When using the speed control, if you experience speed drops greater than 10 mph (16 km/h), disengage until you can get back to cruising speed.
- Use speed control in flat terrain and with light loads to maximize fuel efficiency.

Cooling System

To reduce potential for engine and transmission overheating, take the following actions:

City Driving

When stopped for short periods of time, shift the transmission into NEUTRAL and increase engine idle speed.

Highway Driving

Reduce speed.

Air Conditioning

Turn off temporarily.

RECREATIONAL TOWING (BEHIND MOTORHOME, ETC.)

Towing This Vehicle Behind Another Vehicle

TOWING CONDITION	WHEELS OFF THE GROUND	FRONT WHEEL DRIVE (FWD)	ALL-WHEEL DRIVE (AWD)
Flat Tow	NONE	NOT ALLOWED	NOT ALLOWED
Dolly Tow	REAR	NOT ALLOWED	NOT ALLOWED
	FRONT	OK	NOT ALLOWED
On Trailer	ALL	BEST METHOD	OK
NOTE: When towing your vehicle, always follow applicable state and provincial laws. Contact state and provincial Highway Safety offices for additional details.			

NOTE: You must ensure that the Auto Park Brake feature is disabled before towing this vehicle, to avoid inadvertent Electric Park Brake engagement. The Auto Park Brake feature is enabled or disabled via the Customer Programmable Features in the Uconnect Settings.

Recreational Towing

Front-Wheel Drive (FWD) Models

Recreational towing is allowed ONLY if the front wheels are OFF the ground. This may be accomplished using a tow dolly (front wheels off the ground) or vehicle trailer (all four wheels off the ground). If using a tow dolly, follow this procedure:

- Properly secure the dolly to the tow vehicle, following the dolly manufacturer's instructions.
- Drive the front wheels onto the tow dolly.
- Apply the Electric Park Brake (EPB). Place the transmission in PARK. Turn the engine OFF.
- Properly secure the front wheels to the dolly, following the dolly manufacturer's instructions.
- Cycle the ignition to the RUN mode, but do not start the engine.
- Press and hold the brake pedal.
- Release the Electric Park Brake (EPB).
- Cycle the ignition OFF, remove the key fob, and release the brake pedal.

CAUTION!

- **DO NOT flat tow this vehicle. Damage to the drivetrain will result. If this vehicle requires towing, make sure the drive wheels are OFF the ground.**
- **Ensure that the Electric Park Brake is released, and remains released, while being towed.**
- **Towing this vehicle in violation of the above requirements can cause severe transmission damage. Damage from improper towing is not covered under the New Vehicle Limited Warranty.**

All-Wheel Drive (AWD) Models

Recreational towing (with all four wheels on the ground, or using a towing dolly) is NOT ALLOWED. This vehicle may be towed on a flatbed or vehicle trailer provided all four wheels are OFF the ground.

CAUTION!

Towing this vehicle with ANY of its wheels on the ground can cause severe transmission and/or power transfer unit damage. Damage from improper towing is not covered under the New Vehicle Limited Warranty.

IN CASE OF EMERGENCY

CONTENTS

■ HAZARD WARNING FLASHERS 289

■ BULB REPLACEMENT 289

- □ General Information. 289
- □ Replacement Bulbs 290
- □ Replacing Exterior Bulbs 291
- □ Replacing Interior Bulbs 300

■ FUSES 305

- □ General Information. 305
- □ Access To The Fuses 307
- □ Engine Compartment Fuses/Distribution Unit 307
- □ Body Computer Fuse Center. 312
- □ Rear Cargo Fuse/Relay Distribution Unit. . . .314

■ JACKING AND TIRE CHANGING 315

- □ Jack Location/Spare Tire Stowage — If Equipped 315
- □ Preparations For Jacking 317
- □ Jacking Instructions 318
- □ Road Tire Installation. 322

■ TIRE SERVICE KIT STORAGE. 323

- □ Tire Service Kit — If Equipped 324

■ JUMP STARTING 327

- □ Preparations For Jump Start 327
- □ Jump Starting Procedure 328

■ REFUELING IN EMERGENCY 330

■ IF YOUR ENGINE OVERHEATS 330

■ GEAR SELECTOR OVERRIDE 331

■ FREEING A STUCK VEHICLE 332

■ TOWING A DISABLED VEHICLE 334
□ Front Wheel Drive (FWD) Models 335
□ All Wheel Drive (AWD) Models 335
■ TOW EYE USAGE — IF EQUIPPED. 336
□ Front Tow Eye Installation 338
□ Rear Tow Eye Installation. 339
■ ENHANCED ACCIDENT RESPONSE SYSTEM (EARS) 340
■ EVENT DATA RECORDER (EDR) 340

HAZARD WARNING FLASHERS

The Hazard Warning flasher switch is located on the switch bank below the radio.

Push the switch to turn on the Hazard Warning Flasher. When the switch is activated, all directional turn signals will flash on and off to warn oncoming traffic of an emergency. Push the switch a second time to turn off the Hazard Warning flashers.

This is an emergency warning system and it should not be used when the vehicle is in motion. Use it when your vehicle is disabled and it is creating a safety hazard for other motorists.

When you must leave the vehicle to seek assistance, the Hazard Warning flashers will continue to operate even though the ignition is placed in OFF mode.

NOTE: With extended use the Hazard Warning flashers may wear down your battery.

BULB REPLACEMENT

General Information

- Before you replace a bulb, check the contacts to be sure they are not oxidized.
- Replace the bulbs with the same type and wattage.
- After replacing a light bulb, always check the correct orientation.
- Before replacing a bulb that is not functioning, check that the fuse is intact.

NOTE: Lens fogging can occur under certain atmospheric conditions. This will usually clear as atmospheric conditions change to allow the condensation to change back into a vapor. Turning the lamps on will usually accelerate the clearing process.

Replacement Bulbs

Interior Bulbs

Lamps	Bulb Number
Front Courtesy Light	C5W
Front Courtesy Lights (Sun Visors)	C5W
Rear Dome Light (Models Without Retractable Roof)	C5W
Rear Interior Lights (Models With Retractable Roof)	C5W
Interior Lights	W5W
Dome Light (Glove Compartment)	W5W

Exterior Bulbs

Lamps	Bulb Number
Low Beam/High Beam Headlamps	HIR2
Front Position/Daytime Running Lights (DRL)	P21/5
Front Direction Indicator Lamps	PY21W
Front Fog Lamps	H8
Side Indicators (Side View Mirror)	WY5W
Tail/Brake Lights/Turn Indicators	P21W
Center High Mounted Stop Lamp (CHMSL)	LED (Serviced At An Authorized Dealer)
Reverse	P21W
License Plate Lamp	W5W

Replacing Exterior Bulbs

Headlamps

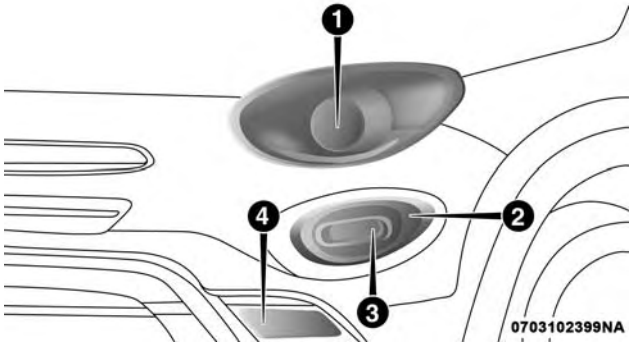

Front Lamps

1 — Headlamps
2 — Daytime Running Lamps
3 — Directional Indicators
4 — Fog Lamps — If Equipped

Hi/Lo Beam Light Halogen

To replace the bulbs proceed as follows:

1. Open the engine compartment and remove the headlamp bulb cap.

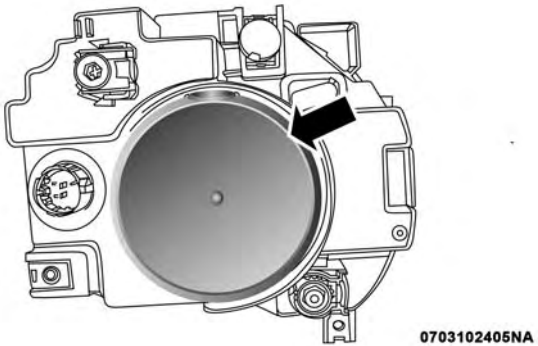

Headlamp Bulb Cap

2. Rotate the headlamp bulb socket counterclockwise then pull outwards.

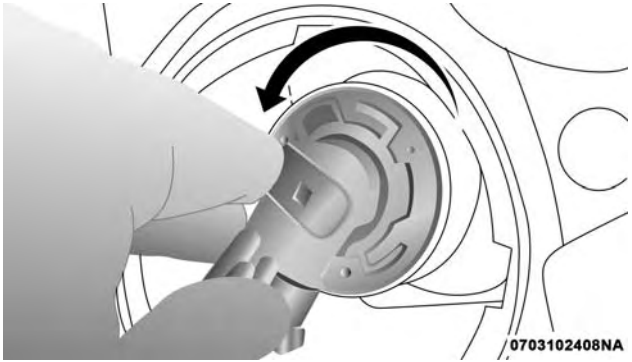

Headlamp Bulb Socket

3. Release the locking tab on the headlamp bulb connector and remove the bulb and socket.

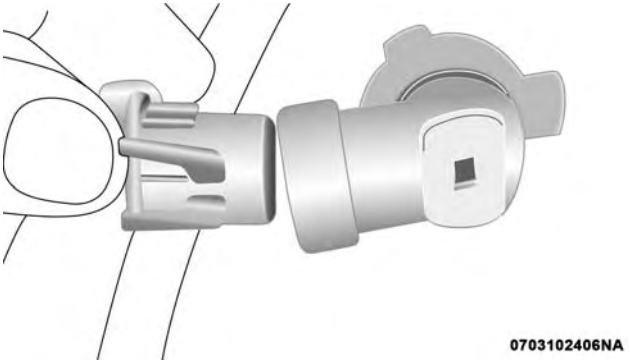

Headlamp Bulb Connector

4. Install the new headlamp bulb making sure it is properly locked.

5. Install the headlamp bulb and socket; align the tabs and turn it clockwise making sure it is properly locked.

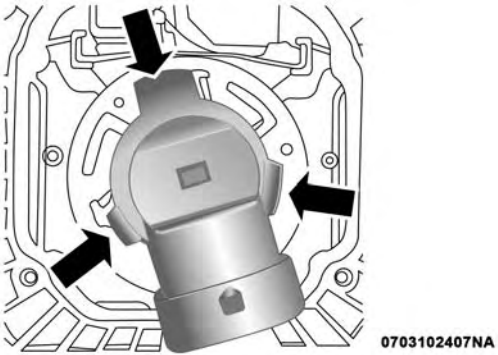

Headlamp Bulb Connector

WARNING!

Carry out the operation of replacing lamps only with the engine off. Also make sure that the engine is cold, to avoid the danger of burns.

Position Lights/Daytime Running Lights/Fog Lights

To replace the bulbs proceed as follows:

1. Turn the front wheels completely.
2. Use a suitable tool to remove the access door.

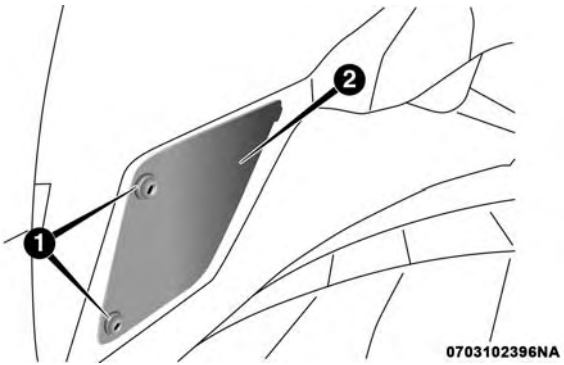

Position Light/Daytime Running Light/Fog light Access

1 — Screws
2 — Access Door

3. Remove the electrical connectors.

4. Rotate in a counterclockwise direction and remove the bulb and bulb socket.

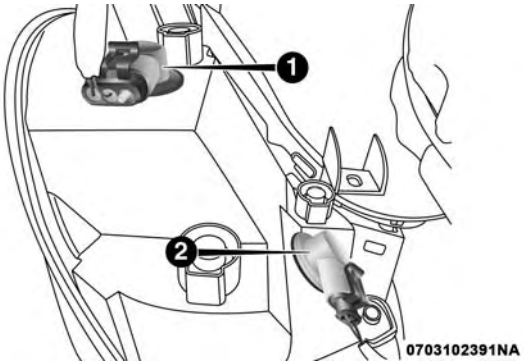

Position Light/Daytime Running Light Assembly

1 — DRL Bulb Socket
2 — Turn Signal Bulb Socket

5. To replace the bulb gently push bulb and rotate counterclockwise.

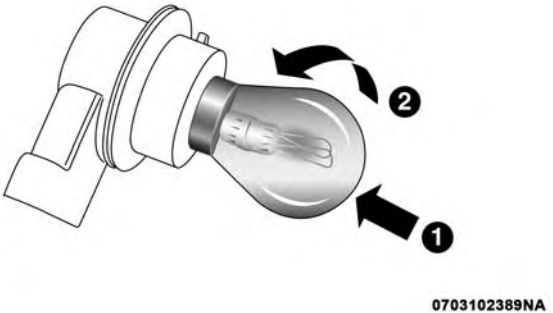

Bulb and Socket Assembly

1 — Bulb
2 — Rotate Bulb

6. Insert the new bulb by pushing on it and turning it clockwise. Make sure the bulb is correctly locked in place.
7. Install the bulb and sockets and rotate them clockwise, making sure that it is properly locked.
8. Reconnect the electrical connectors.
9. Reinstall the access door.

Front Fog Lights

To replace the bulbs proceed as follows:

1. Turn the front wheels completely.
2. Use a suitable tool to remove the access door.

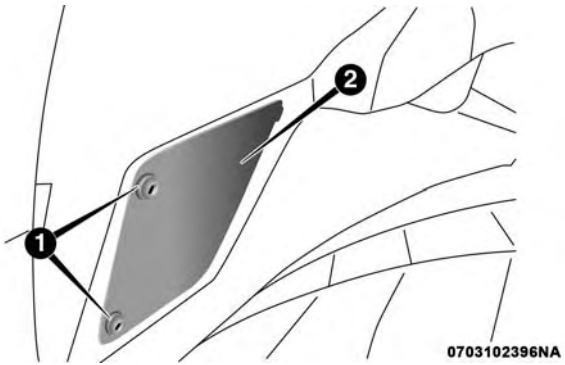

Position Light/Daytime Running Light/Fog Light Access

1 — Screws
2 — Access Door

3. By pushing the electrical connector tab remove the electrical connector.

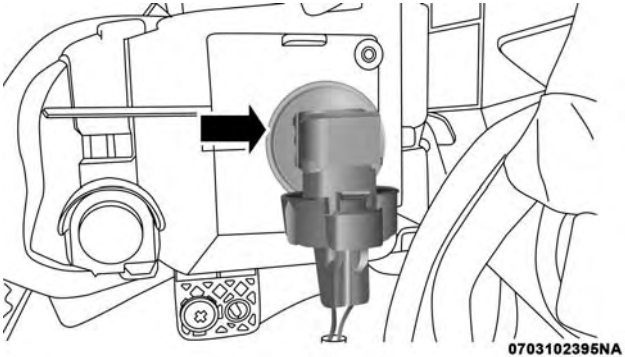

Fog Light Assembly

4. Rotate the bulb counterclockwise, and then replace the bulb.
5. Insert the new bulb in the socket, making sure the bulb is locked into place.
6. Reconnect the electrical connector.
7. Reinstall the access door.

Side Indicators on External Rear View Mirrors – If Equipped

CAUTION!
The procedure is described as a guideline. For the replacement of the lamp it is recommended that you contact your authorized dealer.

To replace the bulb proceed as follows:

1. Remove the mirror cap on the outside rear view mirror.

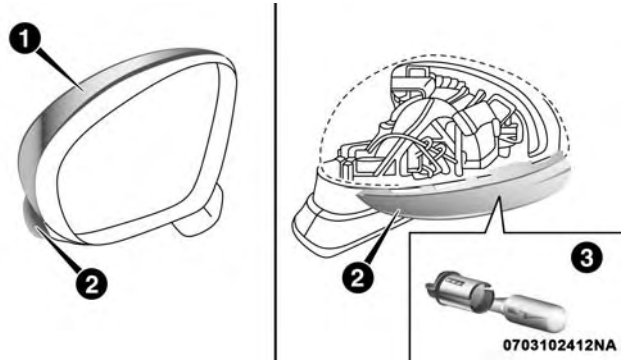

Mirror Cap

1 — Mirror Cover
2 — Side Indicator Lens
3 — Side Indicator Bulb Location

2. Remove the transparent lens assembly as shown.
3. Remove the bulb socket and bulb from the transparent lens assembly by rotating the socket counterclockwise.
4. Remove the bulb from the bulb socket by pulling the bulb straight out.

5. Insert the new bulb, making sure that it is locked into place
6. Reinstall the socket in to the transparent lens assembly.
7. Reinstall the cover on the outside rear view mirror, making sure it is locked into place.

Rear Tail Lamps

Contain the following:

- Position lights
- Stop lights
- Direction indicator
- REVERSE lights

To replace the bulbs proceed as follows:

1. Open the liftgate.
2. Using a suitable tool remove the tail lamp housing screws as shown.

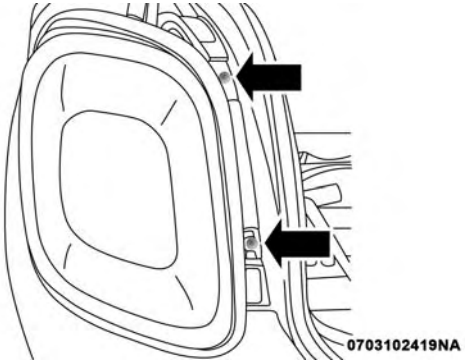

Tail Lamp Removal

3. Remove the rear tail lamp, sliding it toward the outside as shown.

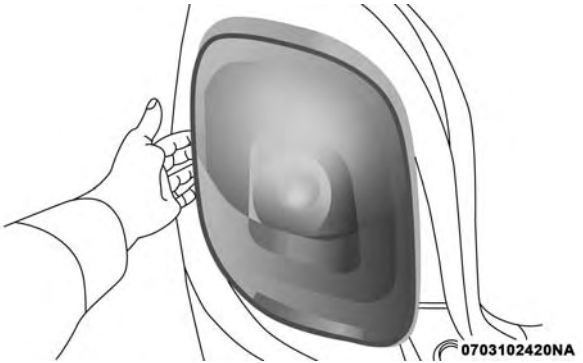

Tail Lamp Removal

4. Remove the screws and remove the rear tail lamp holder.

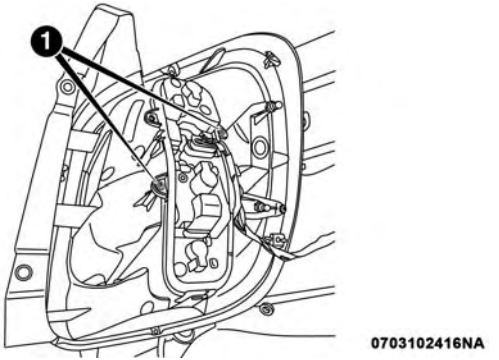

Rear Lamp Assembly

1 — Screws

5. Replace the bulb as necessary.

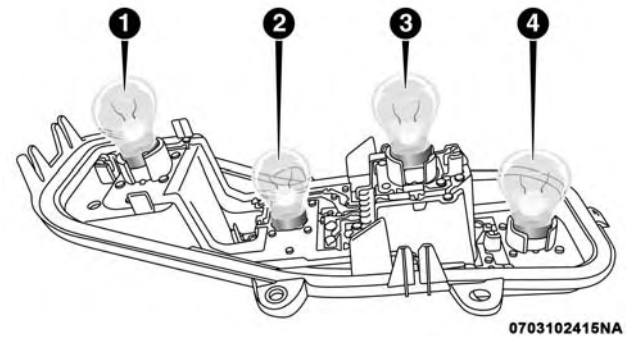

Rear Tail Lamp Holder

1 — Running/Stop Lamp
2 — Direction Indicator Bulb
3 — Running/Stop Lamp
4 — Reverse Bulb

6. Insert the new bulb, making sure it is properly locked.
7. Reassemble the lamp assembly on the rear tail lamp housing, tightening the screws.
8. Reposition the rear tail lamp on the vehicle.
9. Secure the rear tail lamp and reconnect the electrical connector.
10. Finally close the liftgate.

3th Stop Lamp

The CHMSL is LED. For their replacement see your authorized dealer.

License Plate Lights

To replace the bulbs proceed as follows:

1. Using a suitable tool remove the license plate lens.

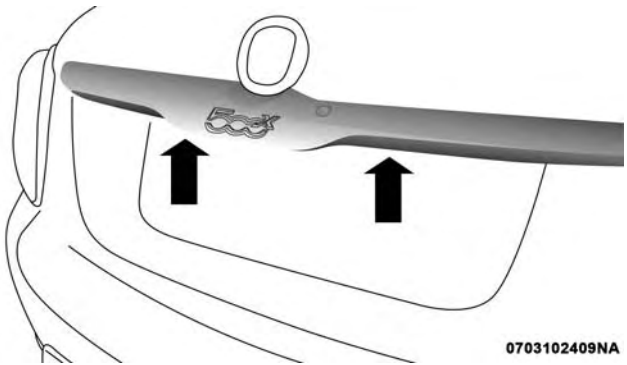

License Plate Light Location

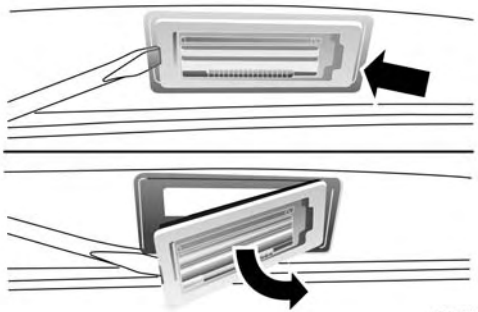

License Plate Light

2. Remove the bulbs from the individual side contacts.
3. Insert the new bulbs, and ensure that they are properly locked between the contacts.
4. Reinstall the license plate lens.

NOTE: If removal the license plate lens using a suitable tool, be sure to cover the tip of the suitable with a cloth so no damage is done to the lenses or the vehicle paint.

Replacing Interior Bulbs

Front Courtesy Light

To replace the bulbs proceed as follows:

1. Using a suitable tool remove the front courtesy light as shown.

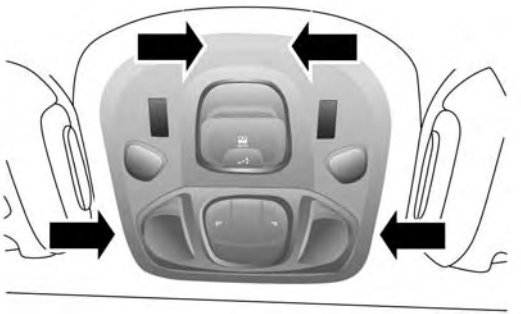

Front Courtesy Light Housing

2. Release the retainer clips and bulb housing as shown.

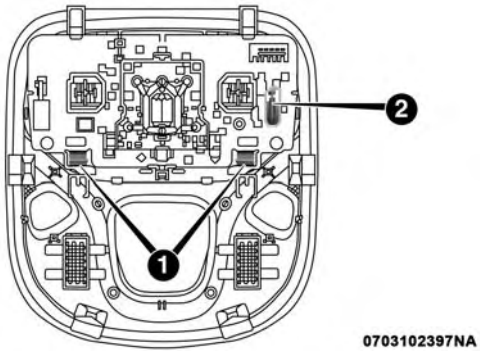

Front Courtesy Bulb Housing

1 — Retaining Clips
2 — Bulb Housing

3. Replace the bulbs by pulling straight out of bulb housing.

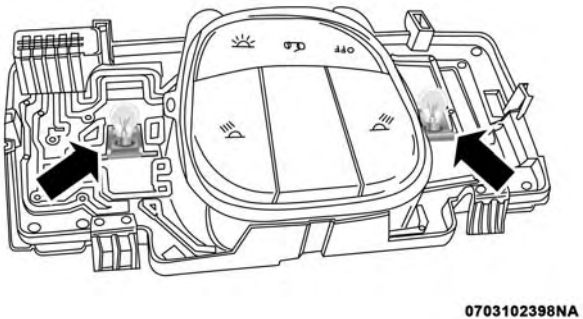

Front Courtesy Bulb Housing

4. Insert the new bulbs, making sure that they are properly locked.
5. Reassemble the bulb housing and courtesy light housing making sure that they are properly locked.
6. Install the front courtesy light making sure that it is properly locked.

Dome Light Vanity Mirror

To replace the bulbs proceed as follows:

1. Lift the cover of the mirror and pull out the visor mirror light cover.
2. Replace the bulb, releasing it from the side contacts, and then insert the new bulb, making sure that it is properly locked between the contacts.

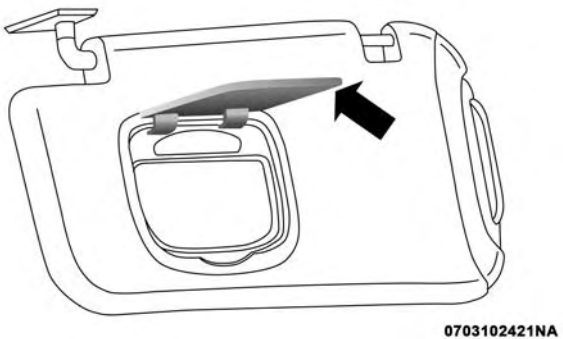

Visor Mirror Cover

3. Reinstall the visor mirror light cover making sure that it is properly locked.
4. Finally lower the visor mirror cover to the mirror.

Dome Light Glove Compartment

To replace the bulb proceed as follows:

1. Open the glove compartment.
2. Place your fingers inside the light assembly, pull the bulb to replace it.

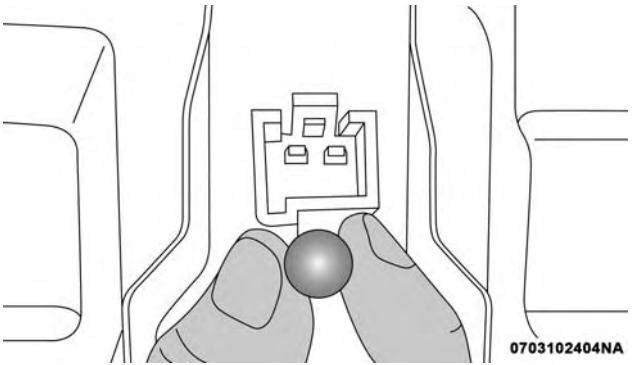

Bulb Removal/Installation

3. Insert the new bulb, making sure it is properly locked.

Rear Dome Light — Without Retractable Roof

To replace the bulbs proceed as follows:

1. Using a suitable tool release the lamp assembly at both the ends.
2. Open the flap and replace the bulb.

Rear Dome Light

3. Insert the new bulb, locking it between the contacts.
4. Reinstall the dome light.

Dome Light

To replace the bulbs proceed as follows:

1. Lower the handle in the direction shown remove the dome light.

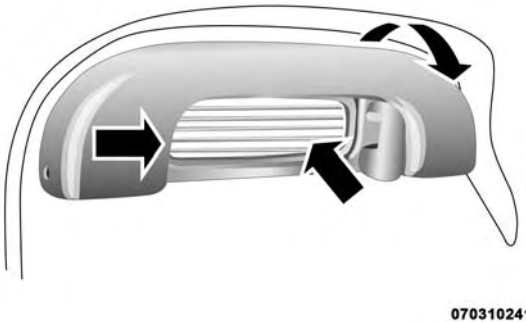

Retractable Roof Light

2. Replace the bulb by removing it from the side contacts.

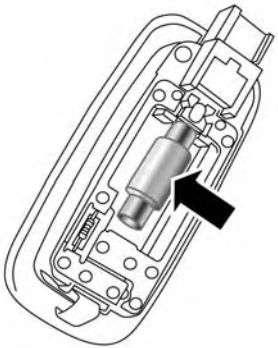

Bulb

3. Insert the new bulb, locking it between the contacts.
4. Reinstall the dome light.

Interior Cargo Lights

To replace the bulbs proceed as follows:

1. Open the luggage compartment and remove the dome light assembly.
2. Open the light cover and replace the bulb.

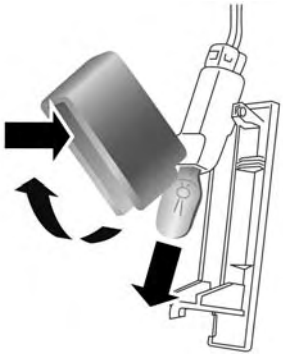

Light Cover

3. Close the light cover over the bulb.
4. Reinstall the dome light in its correct position.

WARNING!

- **Before proceeding with the replacement of the lamp wait for the exhaust pipes are cool: DANGER OF BURNS!**
- **Modifications or repair of the electrical system performed incorrectly and without taking into**

(Continued)

WARNING! *(Continued)*

account the technical characteristics can cause malfunctions with the risk of fire.

- **Halogen lamps contain gas under pressure, in the event of breakage be careful of the projection of fragments of glass.**
- **Halogen lamps must be handled by touching only the metallic part. If the transparent bulb is in contact with the fingers, reduces the intensity of the emitted light and you can also affect the life of the lamp. In case of accidental contact, rub the bulb with a cloth dampened with alcohol and allow to dry.**

FUSES

WARNING!

- **When replacing a blown fuse, always use an appropriate replacement fuse with the same amp rating as the original fuse. Never replace a fuse with another fuse of higher amp rating. Never replace a blown fuse with metal wires or any**

(Continued)

WARNING! *(Continued)*

other material. Failure to use proper fuses may result in serious personal injury, fire and/or property damage.

- **Before replacing a fuse, make sure that the ignition is off and that all the other services are switched off and/or disengaged.**
- **If the replaced fuse blows again, contact an authorized dealer.**
- **If a general protection fuse for safety systems (air bag system, braking system), power unit systems (engine system, gearbox system) or steering system blows, contact an authorized dealer.**

General Information

The fuses protect electrical systems against excessive current.

When a device does not work, you must check the electrical circuit inside the fuse for a break/melt.

Also please be aware that when using power outlets for extended periods of time with the engine off may result in vehicle battery discharge.

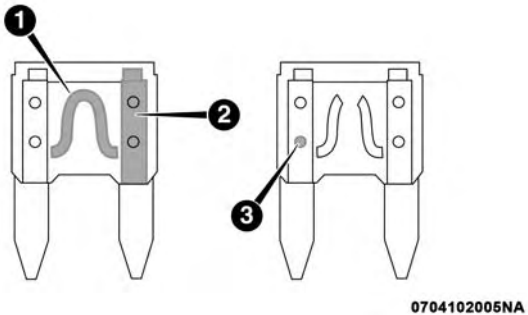

Blade Fuses

1 — Electrical Circuit
2 — Blade Fuse With Good Electrical Circuit
3 — Blade Fuse With Bad Electrical Circuit

Fuse Removal

To replace a fuse use the extractor attached to the fuse cover (located on the inside of the engine compartment fuse cover.

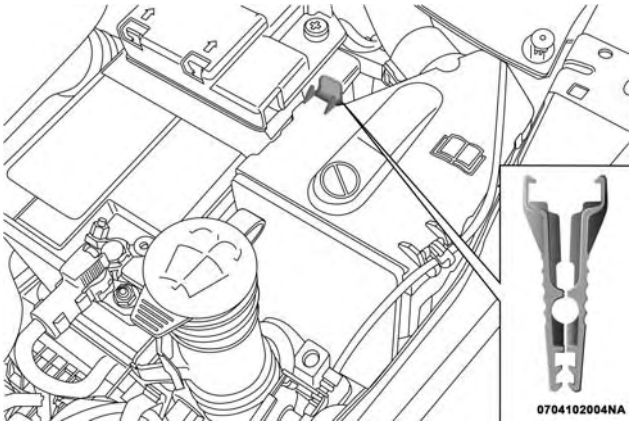

Fuse Extractor Location

Access To The Fuses

The fuses are grouped into four controllers located in the engine compartment, under the instrument panel and on the inside of the left side cargo trim panel.

Engine Compartment Fuses/Distribution Unit

The engine compartment fuse panel is located on the left side of the engine compartment.

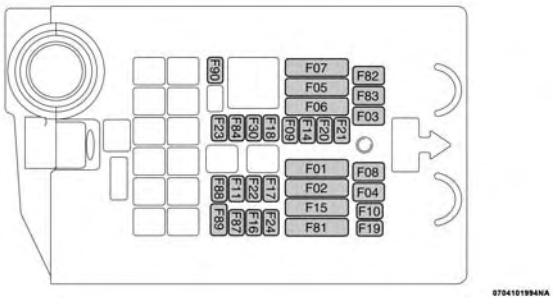

Engine Compartment Fuse Cavities

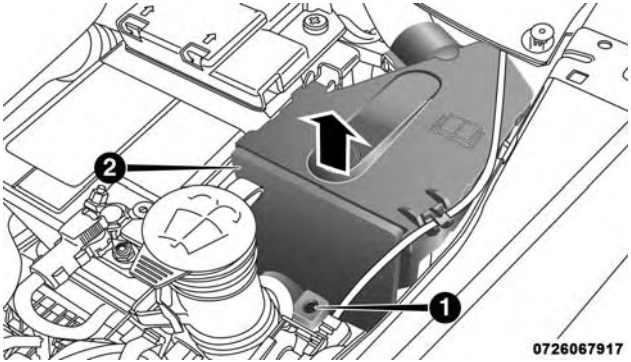

Fuse Panel And Cover Location

1 — Mounting Screw
2 — Fuse Cover

Removing Fuse Cover and Locking Screw

Proceed as follows:

1. Slowly turn the screw counterclockwise.
2. Slowly release the screw.
3. Remove the fuse cover by sliding it upward.

Mounting Fuse Cover and Locking Screw

Proceed as follows:

1. Properly secure the fuse cover to the box, slide completely from top to bottom.
2. Fully depress the screw, using the special screwdriver supplied.
3. Slowly turn the screw clockwise.
4. Release the screw.

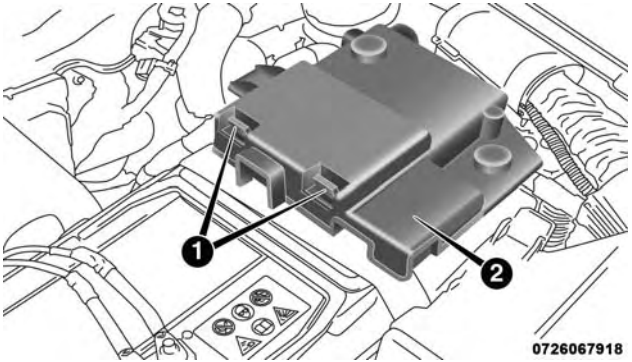

Battery Fuse Cover Location

1 — Fuse Cover Tabs
2 — Fuse Cover

Cavity	Maxi Fuse	Cartage Fuse	Mini Fuse	Description
F01	70 Amp Tan	–	–	Module Body Computer
F02	60 Amp Blue	–	–	Module Body Computer, Rear Distribution Units

Cavity	Maxi Fuse	Cartage Fuse	Mini Fuse	Description
F03	–	20 Amp Blue	–	Controller Power Supply Body Computer
F04	–	30 Amp Pink	–	Brake Control Electronics Module
F05	70 Amp Tan	–	–	Electric Power-Assisted Steering
F06	20 Amp Yellow	–	–	Engine Cooling fan
F07	50 Amp Red	–	–	Engine Cooling fan
F08	–	30 Amp Pink	–	Automatic Transmission, GSM
F09	–	–	5 Amp Tan	Control Module Engine
F10	–	–	10 Amp Red	Horn
F11	–	–	10 Amp Red	Supply Secondary Loads
F14	–	–	5 Amp Tan	Pump Power "After run"
F15	40 Amp Orange	–	–	Brake Control Module Pump

Cavity	Maxi Fuse	Cartage Fuse	Mini Fuse	Description
F16	–	–	5 Amp Tan	Engine Control Module Power, Automatic Transmission
F17	–	–	10 Amp Red 15 Amp Blue	Supply Primary Loads (1.4L) Supply Primary Loads (2.4L)
F18	–	–	30 Amp Green	Power All-Wheel Drive
F19	–	–	7.5 Amp Brown	Air Conditioner Compressor
F20	–	–	5 Amp Tan	Electronic Power Four-Wheel Drive
F21	–	–	15 Amp Blue	Fuel Pump
F22	–	–	20 Amp Yelow	Power Control Module Engine
F23	–	–	20 Amp Yellow (Customer Installed)	Power Outlet (Battery Powered)

Cavity	Maxi Fuse	Cartage Fuse	Mini Fuse	Description
F24	–	–	15 Amp Blue	Electronic Unit Supply Automatic Transmission
F30	–	–	30 Amp Green	Heated Windshield – If Equipped
F83	–	40 Amp Green	–	Air Conditioning Fan
F84	–	–	20 Amp Yellow	Power Outlet (Ignition Powered)
F87	–	–	5 Amp Tan	Gear Selector Automatic Transmission
F88	–	–	7.5 Amp Brown	Heated Outside Mirrors
F89	–	30 Amp Pink	–	Heated Rear Window
F90	–	–	5 Amp Tan	IBS Sensor (Battery State of Charge)

Body Computer Fuse Center

The controller is located at the left side of the steering column at the bottom of the instrument panel.

For the fuse replacement see your authorized dealer.

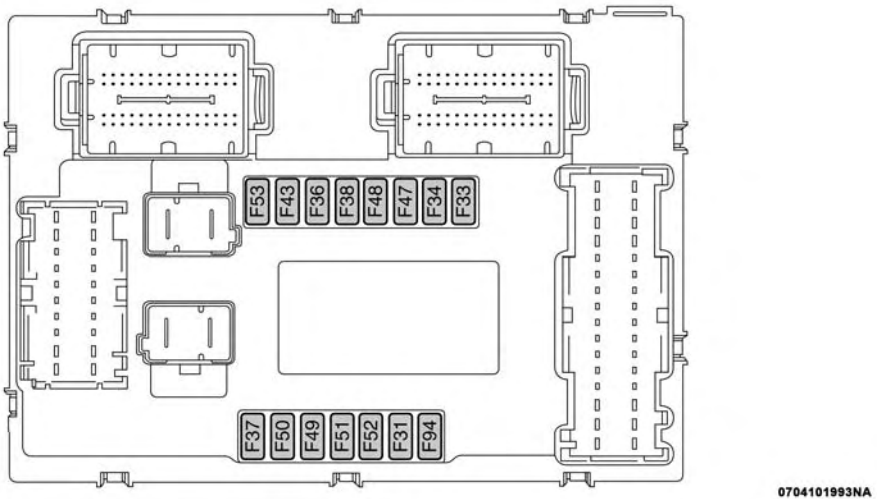

Body Controller Fuse Cavities

Cavity	Mini Fuse	Description
F31	7.5 Amp Brown	Fan Air Conditioning, Power Socket
F33	20 Amp Yellow	Power Window Front (Passenger Side)
F34	20 Amp Yellow	Power Window Front (Driver's Side)
F36	15 Amp Blue	Supply Uconnect System, Air Conditioning, USB Port, Rear lateral ceiling light in case of open roof, EOBD port
F37	10 Amp Red	System Power Forward Collision Warning Plus, All Wheel Drive (AWD), IPC, Central stack switches, Brake Pedal Switch (NC)
F38	20 Amp Yellow	Central Locking
F42	7.5 Amp Brown	BSM - Brake Control Module, EPS - Electric Power-Assisted Steering
F43	20 Amp Yellow	Bi-directional Pump Washer
F47	20 Amp Yellow	Power Rear Window (Driver Side)
F48	20 Amp Yellow	Power Rear Window (Passenger Side)
F49	7.5 Amp Brown	Supply ParkSense, Spot Lights Front Dome, Internal Electocromic Mirror, Heated Front Seats
F50	7.5 Amp Brown	Supply Air Bag
F51	7.5 Amp Brown	Air Conditioning Compressor, Plaque Automatic Transmission, Rear Camera, Air Conditioning, LDW - Lane Departure Warning, ASS - Auxiliary Stack Switch, DSU - Drive Syle Selector Unit, Reverse gear switch, side mirrors and rear window defrost
F53	7.5 Amp Brown	Supply IPC/Starter Device/System Keyless Enter-N-Go, Brake Pedal Switch (NA), EPB - Electric Parking Brake

Rear Cargo Fuse/Relay Distribution Unit

To access the fuses, remove the access door from the left rear panel of the rear cargo area.

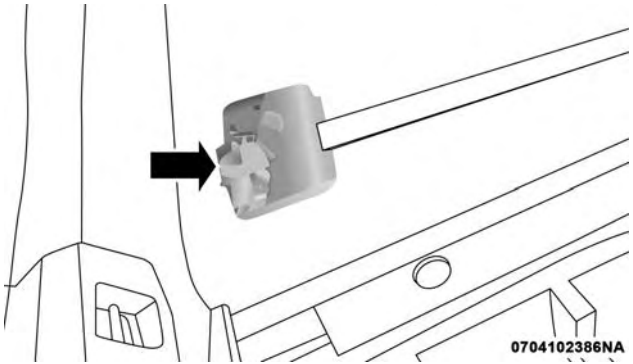

Access Door Location

Push on the left side of the access door to unhinge and remove.

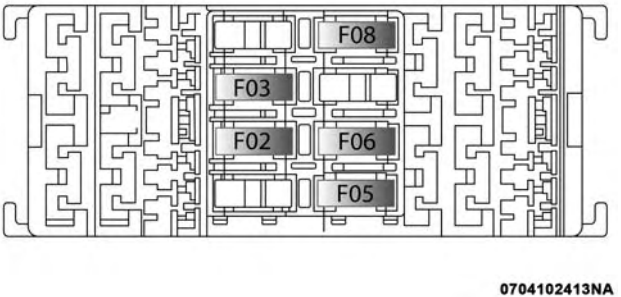

Rear Cargo Fuse Cavities

Cavity	Mini Fuse	Description
F2	20 Amp Yellow	Audio System
F3	20 Amp Yellow	Electric Sunroof
F5	30 Amp Green	Power Seat (driver side)
F6	7.5 Amp Brown	Power Seat (driver side) Lumbar Adjustment
F8	20 Amp Yellow	Heating Front Seats

JACKING AND TIRE CHANGING

WARNING!

- **Do not attempt to change a tire on the side of the vehicle close to moving traffic. Pull far enough off the road to avoid the danger of being hit when operating the jack or changing the wheel.**
- **Being under a jacked-up vehicle is dangerous. The vehicle could slip off the jack and fall on you. You could be crushed. Never put any part of your body under a vehicle that is on a jack. If you need to get under a raised vehicle, take it to a service center where it can be raised on a lift.**
- **Never start or run the engine while the vehicle is on a jack.**
- **The jack is designed to be used as a tool for changing tires only. The jack should not be used to lift the vehicle for service purposes. The vehicle should be jacked on a firm level surface only. Avoid ice or slippery areas.**

Jack Location/Spare Tire Stowage — If Equipped

The jack and tools are located in the rear storage compartment if equipped, inside a special container.

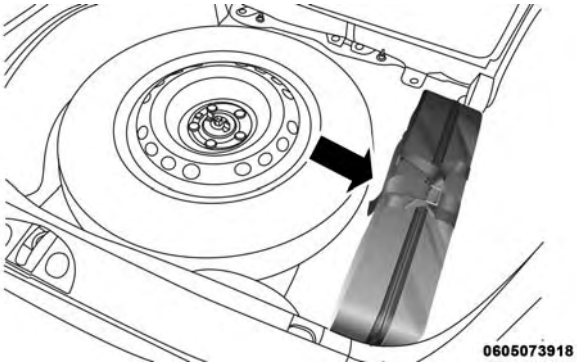

Jack And Tools Location

1. Open the liftgate.

2. Lift the access cover using the load floor handle.

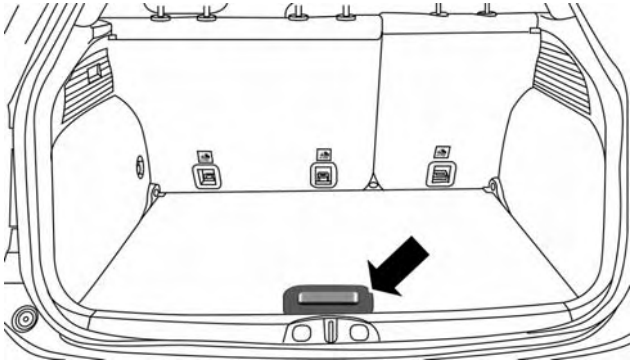

Load Floor Handle

3. Remove the fastener securing the spare tire.

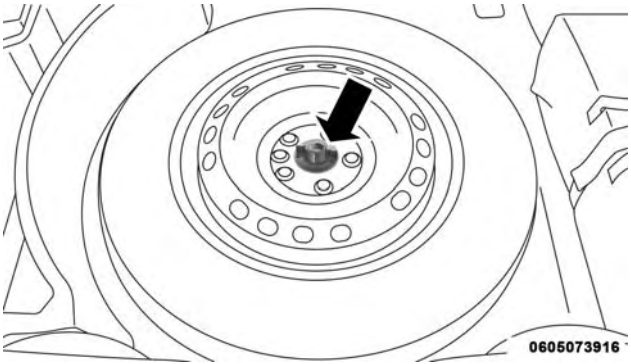

Spare Tire Fastener

4. Remove the jack, wheel bolt wrench, and wheel chocks.

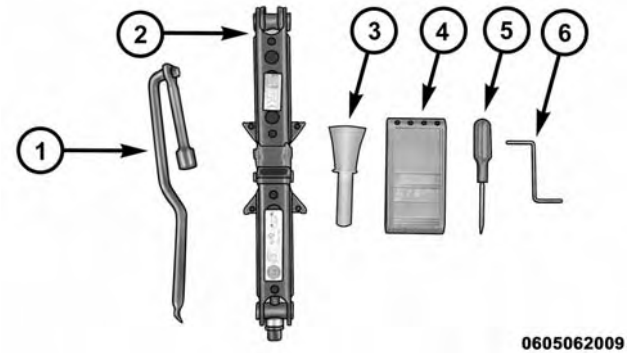

Jack And Tools

1 — Wheel Bolt Wrench
2 — Jack
3 — Emergency Funnel
4 — Wheel Chock
5 — Screwdriver
6 — Emergency Allen Key

5. Remove the spare tire.

WARNING!

A loose tire or jack thrown forward in a collision or hard stop could endanger the occupants of the vehicle. Always stow the jack parts and the spare tire in the places provided. Have the deflated (flat) tire repaired or replaced immediately.

Preparations For Jacking

1. Park the vehicle on a firm level surface as far from the edge of the roadway as possible. Avoid icy or slippery areas.

WARNING!

Do not attempt to change a tire on the side of the vehicle close to moving traffic, pull far enough off the road to avoid being hit when operating the jack or changing the wheel.

2. Turn on the Hazard Warning flasher.
3. Set the Electric Park Brake.
4. Place the gear selector into PARK (automatic transmission) or REVERSE (manual transmission).

5. Turn the ignition to STOP mode.

6. Chock both the front and rear of the wheel diagonally opposite of the jacking position. For example, if changing the right front tire, chock the left rear wheel.

NOTE: Passengers should not remain in the vehicle when the vehicle is being jacked.

Jacking Instructions

WARNING!

Carefully follow these tire changing warnings to help prevent personal injury or damage to your vehicle:

- **Always park on a firm, level surface as far from the edge of the roadway as possible before raising the vehicle.**
- **Turn on the Hazard Warning flasher.**
- **Chock the wheel diagonally opposite the wheel to be raised.**
- **Apply the parking brake and place an automatic transmission in PARK.**

(Continued)

WARNING! ***(Continued)***

- **Never start or run the engine with the vehicle on a jack.**
- **Do not let anyone sit in the vehicle when it is on a jack.**
- **Do not get under the vehicle when it is on a jack. If you need to get under a raised vehicle, take it to a service center where it can be raised on a lift.**
- **Only use the jack in the positions indicated and for lifting this vehicle during a tire change.**
- **If working on or near a roadway, be extremely careful of motor traffic.**
- **To assure that spare tires, flat or inflated, are securely stowed, spares must be stowed with the valve stem facing the ground.**

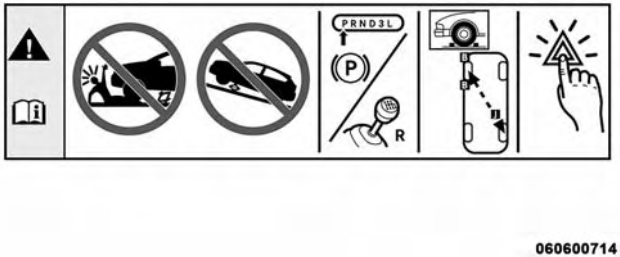

Jack Warning Label

CAUTION!
Do not attempt to raise the vehicle by jacking on locations other than those indicated in the Jacking Instructions for this vehicle.

1. Remove the spare tire, jack, and wheel bolt wrench.
2. If equipped with wheels where the center cap covers the wheel bolts, use the wheel bolt wrench to pry the center cap off carefully before raising the vehicle.
3. Before raising the vehicle, use the wheel bolt wrench to loosen, but not remove the wheel bolts on the wheel with the flat tire. Turn the wheel bolts counterclockwise one turn while the wheel is still on the ground.

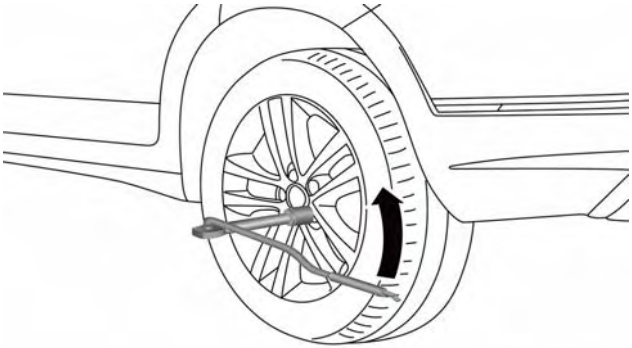

Loosen The Wheel Bolt

4. Place the jack underneath the lift area that is closest to the flat tire. Turn the jack screw clockwise to firmly engage the jack saddle with the lift area of the sill flange, centering the jack saddle inside the cutout in the sill cladding.

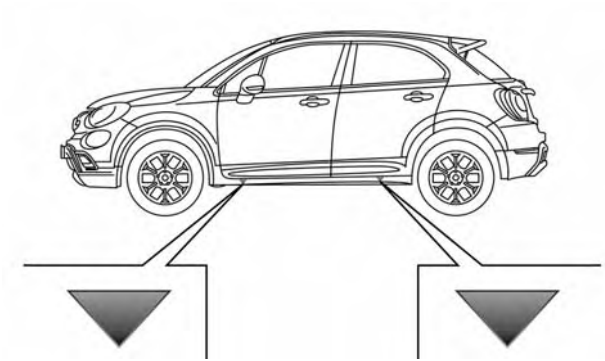

Jacking Locations

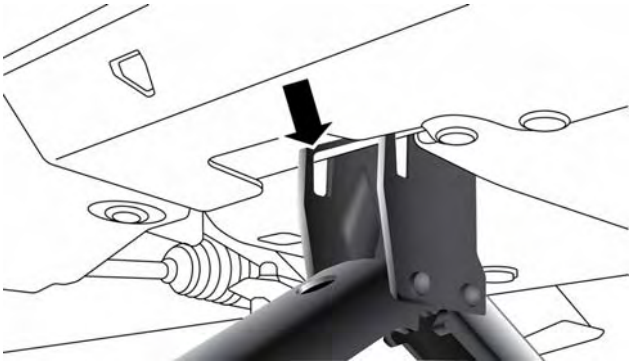

Front Jacking Engagement Point

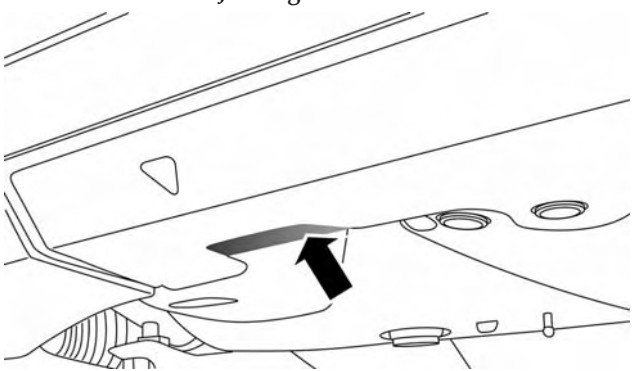

Front Jacking Location

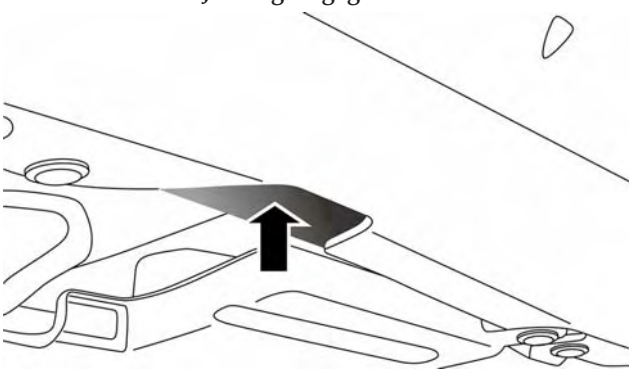

Rear Jacking Location

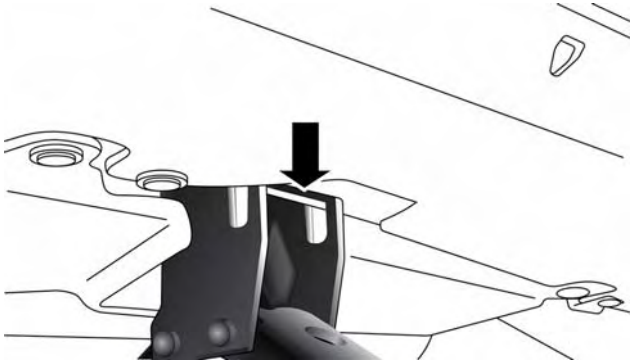

Rear Jacking Engagement Point

5. Raise the vehicle just enough to remove the flat tire.

WARNING!

Raising the vehicle higher than necessary can make the vehicle less stable. It could slip off the jack and hurt someone near it. Raise the vehicle only enough to remove the tire.

6. Remove the wheel bolts and tire.
7. Mount the spare tire.

CAUTION!

Be sure to mount the spare tire with the valve stem facing outward. The vehicle could be damaged if the spare tire is mounted incorrectly.

Mounting Spare Tire

NOTE:

- Your vehicle may be equipped with a compact spare tire or a limited — use spare tire. For further information refer to "Tires — General Information" in "Maintaining Your Vehicle".
- For vehicles so equipped, do not attempt to install a center cap or wheel cover on the compact spare.

8. Install the wheel bolts with the threaded end of the wheel bolt toward the wheel. Lightly tighten the wheel bolts.

WARNING!

To avoid the risk of forcing the vehicle off the jack, do not fully tighten the wheel bolts until the vehicle has been lowered. Failure to follow this warning may result in serious injury.

9. Lower the vehicle to the ground by turning the wheel bolt wrench counterclockwise.
10. Finish tightening the wheel bolts. Push down on the wrench while at the end of the handle for increased leverage. Tighten the wheel bolts in a star pattern until each wheel bolt has been tightened twice. Refer to "Torque Specifications" in "Technical Data" for the proper lug bolt torque. If in doubt about the correct tightness, have them checked with a torque wrench by your authorized dealer or at a service station.
11. Securely stow the jack, tools, chocks and flat tire.

WARNING!

A loose tire or jack thrown forward in a collision or hard stop could endanger the occupants of the vehicle. Always stow the jack parts and the spare tire in the places provided. Have the deflated (flat) tire repaired or replaced immediately.

Road Tire Installation

1. Mount the road tire on the axle.
2. Install the remaining wheel bolts with the threaded end of the wheel bolt toward the wheel. Lightly tighten the wheel bolts.

WARNING!

To avoid the risk of forcing the vehicle off the jack, do not tighten the lug nuts fully until the vehicle has been lowered. Failure to follow this warning may result in serious injury.

3. Lower the vehicle to the ground by turning the jack handle counterclockwise.
4. Finish tightening the wheel bolts. Push down on the wrench while at the end of the handle for increased leverage. Tighten the wheel bolts in a star pattern until each wheel bolt has been tightened twice. Refer to "Torque Specifications" in the "Technical Data" section for the proper lug bolt torque. If in doubt about the correct tightness, have them checked with a torque wrench by your authorized dealer or service station.
5. Lower the jack until it is free. Remove the wheel chocks. Stow the jack and tools back in the proper storage location. Release the Electric Park Brake before driving the vehicle.
6. After 25 miles (40 km) check the wheel bolt torque with a torque wrench to ensure that all wheel bolts are properly seated against the wheel.

TIRE SERVICE KIT STORAGE

The Tire Service Kit is located in the rear storage compartment inside a storage container. Located inside the container are a screwdriver and the emergency fuel funnel. To access the Tire Service Kit open the liftgate and remove the load floor.

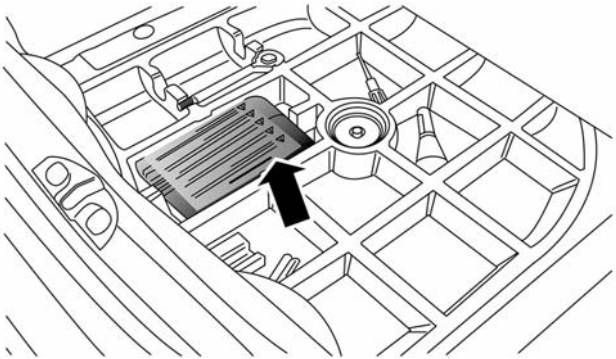

Tire Service Kit Location

Tire Service Kit — If Equipped

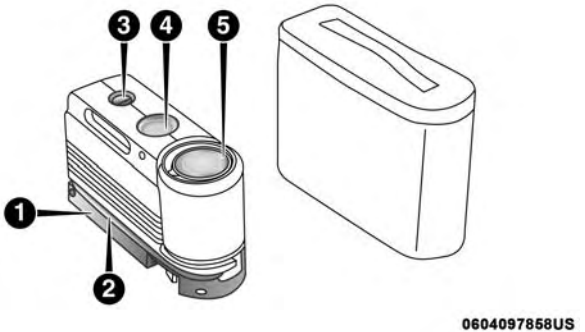

Tire Service Kit Components

1 — Power Plug (located on bottom side of Tire Service Kit)
2 — Sealant Hose (Clear)
3 — Power Button
4 — Pressure Gauge
5 — Sealant Bottle

If a tire is punctured, you can make a first emergency repair using the Tire Service Kit located in the rear storage compartment inside the storage container.

Remove the Tire Service Kit from the vehicle, take it out from the bag and place it near the punctured tire. Screw the clear flexible filling tube to the tire valve.

WARNING!

- **Do not attempt to seal a tire on the side of the vehicle closest to traffic. Pull far enough off the road to avoid the danger of being hit when using the Tire Service Kit.**
- **Do not use Tire Service Kit or drive the vehicle under the following circumstances:**
  - **If the puncture in the tire tread is approximately 1/4 inch (6 mm) or larger.**
  - **If the tire has any sidewall damage.**
  - **If the tire has any damage from driving with extremely low tire pressure.**
  - **If the tire has any damage from driving on a flat tire.**
  - **If the wheel has any damage.**
  - **If you are unsure of the condition of the tire or the wheel.**
- **Keep Tire Service Kit away from open flames or heat sources.**

(Continued)

WARNING! ***(Continued)***

- **A loose Tire Service Kit thrown forward in a collision or hard stop could endanger the occupants of the vehicle. Always stow the Tire Service Kit in the place provided. Failure to follow these warnings can result in injuries that are serious or fatal to you, your passengers, and others around you.**
- **Take care not to allow the contents of Tire Service Kit to come in contact with hair, eyes, or clothing. Tire Service Kit sealant is harmful if inhaled, swallowed, or absorbed through the skin. It causes skin, eye, and respiratory irritation. Flush immediately with plenty of water if there is any contact with eyes or skin. Change clothing as soon as possible, if there is any contact with clothing.**
- **Tire Service Kit Sealant solution contains latex. In case of an allergic reaction or rash, consult a physician immediately. Keep Tire Service Kit out of reach of children. If swallowed, rinse mouth immediately with plenty of water and drink plenty of water. Do not induce vomiting! Consult a physician immediately.**

Insert the power plug into the vehicle power outlet socket. Start the vehicle engine.

Push the Tire Service Kit power button to the "I" position. The electric compressor will be turned on, sealant and air will inflate the tire.

Minimum 26 psi (1.8 bar) of pressure should be reached within 20 minutes. If the pressure has not been reached turn off and remove the Tire Service Kit, drive the vehicle 30 feet (10 meters) back and forth, to better distribute the sealant inside the tire.

Attach the clear flexible filling tube of the compressor directly to the tire valve and repeat the inflation process.

When the correct pressure has been reached, start driving the vehicle to uniformly distribute the sealant inside the tire. After 10 minutes, stop and check the tire pressure. If the pressure is below 19 psi (1.3 bar), do not drive the vehicle, as the tire is too damaged, contact the nearest authorized dealer.

WARNING!

Tire Service Kit is not a permanent flat tire repair. Have the tire inspected and repaired or replaced after using Tire Service Kit. Do not exceed 65 mph (110 km/h) until the tire is repaired or replaced. Failure to follow this warning can result in injuries that are serious or fatal to you, your passengers, and others around you. Have the tire checked as soon as possible at an authorized dealer.

If the pressure is at 19 psi (1.3 bar) or above repeat the inflation process to reach the correct tire pressure and continue driving.

Peel off the warning label from the bottle and place it on the dashboard as a reminder to the driver that the tire has been treated with Tire Service Kit.

WARNING!

The metal end fitting from Power Plug may get hot after use, so it should be handled carefully.

NOTE: Replace the sealant canister prior to the expiration date at your authorized dealer.

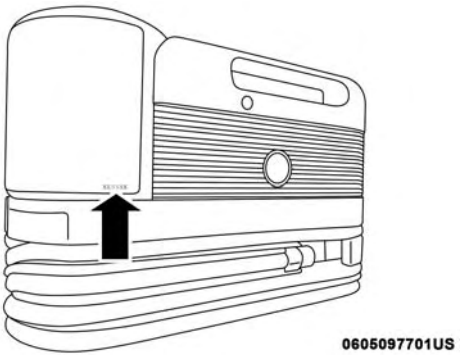

Tire Service Kit Expiration Date Location

WARNING!

Store the sealant canister in its special compartment, away from sources of heat. Failure to follow this WARNING may result in sealant canister rupture and serious injury or death.

JUMP STARTING

If your vehicle has a discharged battery it can be jump-started using a set of jumper cables and a battery in another vehicle or by using a portable battery booster pack. Jump starting can be dangerous if done improperly so please follow the procedures in this section carefully.

NOTE: When using a portable battery booster pack follow the manufacturer's operating instructions and precautions.

WARNING!

Do not attempt jump-starting if the battery is frozen. It could rupture or explode and cause personal injury.

CAUTION!

Do not use a portable battery booster pack or any other booster source with a system voltage greater than 12 Volts or damage to the battery, starter motor, alternator or electrical system may occur.

Preparations For Jump Start

The battery in your vehicle is located in the front of the engine compartment, behind the left headlight assembly.

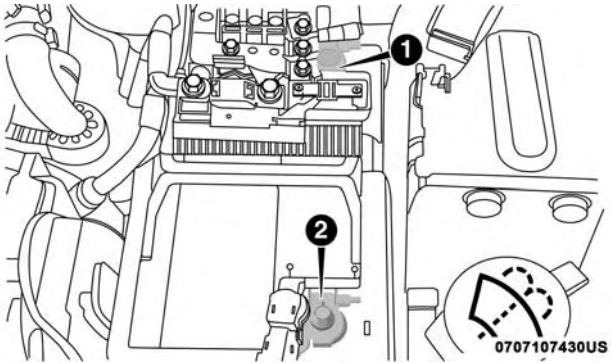

Battery Posts

1 — Positive Battery Post
2 — Negative Battery Post

NOTE: The positive battery post is covered with a protective cap. Lift up on the cap to gain access to the positive battery post.

WARNING!

- **Take care to avoid the radiator cooling fan whenever the hood is raised. It can start anytime the ignition switch is ON. You can be injured by moving fan blades.**
- **Remove any metal jewelry such as rings, watch bands and bracelets that could make an inadvertent electrical contact. You could be seriously injured.**
- **Batteries contain sulfuric acid that can burn your skin or eyes and generate hydrogen gas which is flammable and explosive. Keep open flames or sparks away from the battery.**

Proceed as follows:

1. Set the Electric Park Brake, shift the automatic transmission into PARK (manual transmission in NEUTRAL) and place the ignition OFF.
2. Turn off the heater, radio, and all unnecessary electrical accessories.
3. If using another vehicle to jump start the battery, park the vehicle within the jumper cables reach, set the parking brake and make sure the ignition is OFF.

WARNING!

Do not allow vehicles to touch each other as this could establish a ground connection and personal injury could result.

Jump Starting Procedure

WARNING!

Failure to follow this jump-starting procedure could result in personal injury or property damage due to battery explosion.

CAUTION!

Failure to follow these procedures could result in damage to the charging system of the booster vehicle or the discharged vehicle.

Connecting The Jumper Cables

1. Connect the positive **(+)** end of the jumper cable to the positive **(+)** post of the discharged vehicle.
2. Connect the opposite end of the positive **(+)** jumper cable to the positive **(+)** post of the booster battery.
3. Connect the negative **(-)** end of the jumper cable to the negative **(-)** post of the booster battery.
4. Connect the opposite end of the negative **(-)** jumper cable to a good engine ground (exposed metal part of the discharged vehicle's engine) away from the battery and the fuel injection system.

WARNING!

Do not connect the jumper cable to the negative (-) post of the discharged battery. The resulting electrical spark could cause the battery to explode and could result in personal injury. Only use the specific ground point, do not use any other exposed metal parts.

5. Start the engine in the vehicle that has the booster battery, let the engine idle a few minutes, and then start the engine in the vehicle with the discharged battery.
6. Once the engine is started, remove the jumper cables in the reverse sequence:

Disconnecting The Jumper Cables

1. Disconnect the negative **(-)** end of the jumper cable from the engine ground of the vehicle with the discharged battery.
2. Disconnect the opposite end of the negative **(-)** jumper cable from the negative **(-)** post of the booster battery.
3. Disconnect the positive **(+)** end of the jumper cable from the positive **(+)** post of the booster battery.
4. Disconnect the opposite end of the positive **(+)** jumper cable from the positive **(+)** post of the vehicle with the discharged battery.

If frequent jump starting is required to start your vehicle you should have the battery and charging system inspected at your authorized dealer.

CAUTION!

Accessories plugged into the vehicle power outlets draw power from the vehicle's battery, even when not in use (i.e., cellular devices, etc.). Eventually, if plugged in long enough without engine operation, the vehicle's battery will discharge sufficiently to degrade battery life and/or prevent the engine from starting.

REFUELING IN EMERGENCY

The fuel filling procedure in case of emergency is described in the "Emergency Refueling Procedure". Refer to "Adding Fuel" in "Starting And Operating" for further information.

IF YOUR ENGINE OVERHEATS

In any of the following situations, you can reduce the potential for overheating your engine by taking the appropriate action.

- On the highways — slow down.
- In city traffic — while stopped, put transmission in NEUTRAL, but do not increase engine idle speed.

CAUTION!

Driving with a hot cooling system could damage your vehicle. If the temperature gauge reads "H," pull over and stop the vehicle. Idle the vehicle with the air conditioner turned off until the pointer drops back into the normal range. If the pointer remains on the "H" and you hear continuous chimes, turn the engine off immediately and call for service.

NOTE: There are steps that you can take to slow down an impending overheat condition:

- If your air conditioner (A/C) is on, turn it off. The A/C system adds heat to the engine cooling system and turning the A/C off can help remove this heat.
- You can also turn the temperature control to maximum heat, the mode control to floor and the blower control to high. This allows the heater core to act as a supplement to the radiator and aids in removing heat from the engine cooling system.

WARNING!

You or others can be badly burned by hot engine coolant (antifreeze) or steam from your radiator. If you see or hear steam coming from under the hood, do not open the hood until the radiator has had time to cool. Never try to open a cooling system pressure cap when the radiator or coolant bottle is hot.

GEAR SELECTOR OVERRIDE

If a malfunction occurs and the gear selector cannot be moved out of the PARK position, you can use the following procedure to temporarily move the gear selector:

1. Turn the engine OFF.
2. Apply the Electric Park Brake.
3. Carefully separate the gear selector bezel and boot assembly from the center console.

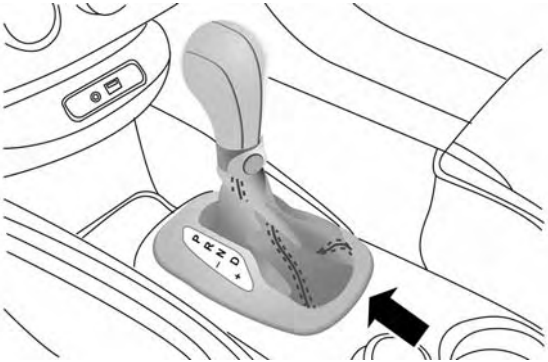

Gear Selector Bezel Location

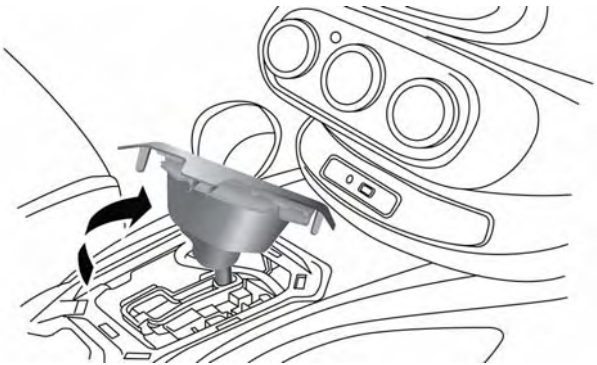

Removing Gear Selector Bezel

4. Push and maintain firm pressure on the brake pedal.
5. Insert a small screwdriver or similar tool down into the gear selector override access hole (at the right front corner of the gear selector assembly), and push and hold the override release lever down.

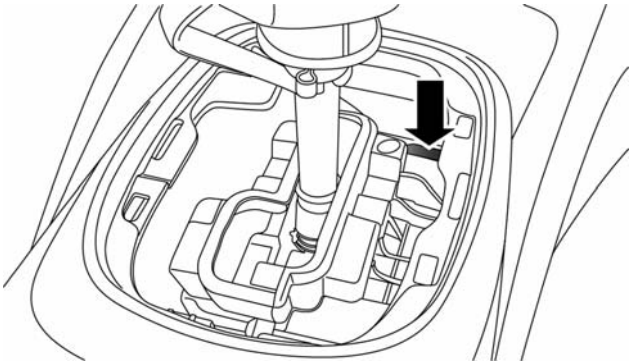

Gear Selector Override Location

6. Move the gear selector to the NEUTRAL position.
7. The vehicle may then be started in NEUTRAL.
8. Reinstall the gear selector bezel.

FREEING A STUCK VEHICLE

If your vehicle becomes stuck in mud, sand or snow, it can often be moved using a rocking motion. Turn the steering wheel right and left to clear the area around the front wheels. For vehicles with automatic transmission, push and hold the lock button on the gear selector. Then shift back and forth between DRIVE and REVERSE (with automatic transmission) or SECOND GEAR and REVERSE (with manual transmission), while gently pressing the accelerator.

Use the least amount of accelerator pedal pressure that will maintain the rocking motion without spinning the wheels or racing the engine.

For Vehicles With Automatic Transmission:

Shifts between DRIVE and REVERSE can only be achieved at wheel speeds of 5 mph (8 km/h) or less. Whenever the transmission remains in NEUTRAL for more than two seconds, you must press the brake pedal to engage DRIVE or REVERSE.

NOTE: Push the "ESC Off" switch (if necessary), to place the Electronic Stability Control (ESC) system in "Partial Off" mode, before rocking the vehicle. Refer to "Electronic Brake Control" in "Safety" for further information. Once the vehicle has been freed, push the "ESC Off" switch again to restore "ESC On" mode.

WARNING!

Fast spinning tires can be dangerous. Forces generated by excessive wheel speeds may cause damage, or even failure, of the axle and tires. A tire could explode and injure someone. Do not spin your vehicle's wheels faster than 30 mph (48 km/h) or for longer than 30 seconds continuously without stopping when you are stuck and do not let anyone near a spinning wheel, no matter what the speed.

CAUTION!

- **Racing the engine or spinning the wheels may lead to transmission overheating and failure. Allow the engine to idle with the transmission in NEUTRAL for at least one minute after every five rocking-motion cycles. This will minimize overheating and reduce the risk of clutch or transmission failure during prolonged efforts to free a stuck vehicle.**
- **When "rocking" a stuck vehicle by shifting between DRIVE/ SECOND gear and REVERSE, do not spin the wheels faster than 15 mph (24 km/h), or drivetrain damage may result.**
- **Revving the engine or spinning the wheels too fast may lead to transmission overheating and failure. It can also damage the tires. Do not spin the wheels above 30 mph (48 km/h) while in gear (no transmission shifting occurring).**

TOWING A DISABLED VEHICLE

This section describes procedures for towing a disabled vehicle using a commercial towing service.

Towing Condition	Wheels OFF The Ground	FWD MODELS	ALL WHEEL DRIVE
Flat Tow	**NONE**	**NOT ALLOWED**	**NOT ALLOWED**
Wheel Lift Or Dolly Tow	Rear	**NOT ALLOWED**	**NOT ALLOWED**
	Front	**OK**	**NOT ALLOWED**
Flatbed	**ALL**	**BEST METHOD**	**OK**

Proper towing or lifting equipment is required to prevent damage to your vehicle. Use only tow bars and other equipment designed for this purpose, following equipment manufacturer's instructions. Use of safety chains is mandatory. Attach a tow bar or other towing device to main structural members of the vehicle, not to bumpers or associated brackets. State and local laws regarding vehicles under tow must be observed.

NOTE:

- You must ensure that the Auto Park Brake feature is disabled before towing this vehicle, to avoid inadvertent Electric Park Brake engagement. The Auto Park Brake feature is enabled or disabled via the customer programmable features in the Uconnect Settings.
- Vehicles with a discharged battery or total electrical failure when the Electric Park Brake (EPB) is engaged, will need a wheel dolly or jack to raise the rear wheels off the ground when moving the vehicle onto a flatbed.

If you must use the accessories (wipers, defrosters, etc.) while being towed, the ignition must be in the RUN position.

NOTE: The Safehold feature will engage the Electric Park Brake whenever the driver's door is opened (if the ignition is RUN, transmission is not in PARK, and brake pedal is released). If you are towing this vehicle with the ignition in the RUN position, you must manually disable the Electric Park Brake each time the driver's door is opened, by pressing the brake pedal and then releasing the EPB.

If the key fob is unavailable, or the vehicle's battery is discharged, refer to "Gear Selector Override" in this section for instructions on shifting the transmission out of PARK so that the vehicle can be moved.

CAUTION!

- **Do not use sling type equipment when towing. Vehicle damage may occur.**
- **When securing the vehicle to a flat bed truck, do not attach to front or rear suspension components. Damage to your vehicle may result from improper towing.**

Front Wheel Drive (FWD) Models

The manufacturer recommends towing your vehicle with all four wheels OFF the ground using a flatbed.

If flatbed equipment is not available, this vehicle must towed with the front wheels OFF the ground (using a towing dolly, or wheel lift equipment with the front wheels raised).

NOTE: Ensure that the Electric Park Brake is released, and remains released, while being towed.

CAUTION!

Towing this vehicle in violation of the above requirements can cause severe transmission damage. Damage from improper towing is not covered under the New Vehicle Limited Warranty.

All Wheel Drive (AWD) Models

The manufacturer requires towing with all four wheels OFF the ground. Acceptable methods are to tow the vehicle on a flatbed, or with one end of the vehicle raised and the opposite end on a towing dolly.

CAUTION!

- **DO NOT tow this vehicle with ANY of its wheels on the ground. Damage to the drivetrain will result.**
- **Front or rear wheel lifts must not be used. Internal damage to the transmission or power transfer unit will occur if a front or rear wheel lift is used when towing.**
- **Towing this vehicle in violation of the above requirements can cause severe transmission and/or power transfer unit damage. Damage from improper towing is not covered under the New Vehicle Limited Warranty.**

TOW EYE USAGE — IF EQUIPPED

Your vehicle is equipped with a tow eye that can be used to tow a disabled vehicle.

When using a tow eye be sure to follow the "Tow Eye Usage Precautions" and the "Towing A Disabled Vehicle" instructions in this section.

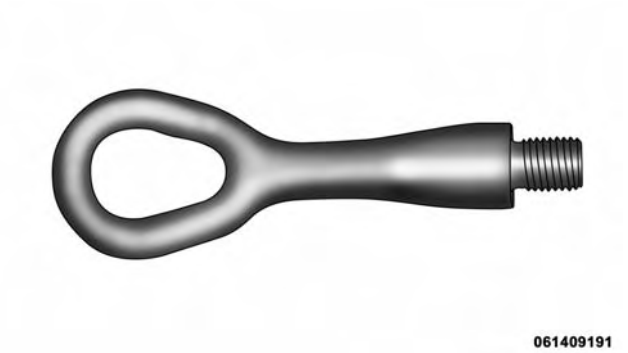

Tow Eye

Tow Eye Usage Precautions

NOTE:

- Ensure that the tow eye is properly seated and secure in the mounting receptacle.
- The tow eye is recommended for use with an approved tow bar and or rope.
- Do not use the tow eye to pull the vehicle onto a flatbed truck.

- Do not use the tow eye to free a stuck vehicle. Refer to "Freeing A Stuck Vehicle" in this section for further information.

WARNING!

Stand clear of vehicles when pulling with tow eyes.
- **Do not use a chain with a tow eye. Chains may break, causing serious injury or death.**
- **Do not use a tow strap with a tow eye. Tow straps may break or become disengaged, causing serious injury or death.**
- **Failure to follow proper tow eye usage may cause components to break resulting in serious injury or death.**

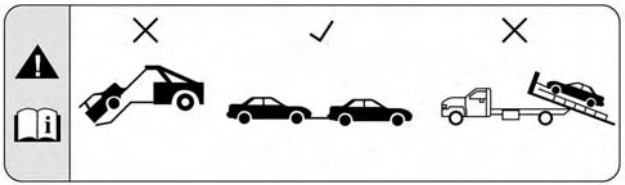

Tow Eye Warning Label

CAUTION!

- **The tow eye must be used exclusively for roadside assistance operations. Only use the tow eye with an appropriate device in accordance with the highway code (a rigid bar or rope) to flat tow the vehicle for a short distance to the nearest service location.**
- **Tow eyes MUST NOT be used to tow vehicles off the road or where there are obstacles.**

(Continued)

CAUTION! *(Continued)*

- **In compliance with the above conditions, towing with a tow eye must take place with two vehicles (one towing, the other towed) aligned as much as possible along the same center line. Damage to your vehicle may occur if these guidelines are not followed.**

Front Tow Eye Installation

The front tow eye receptacle is located behind a access door, located on the right front bumper fascia. To install the tow eye, open the access door using the vehicle key or a small screwdriver, and thread the tow eye into the receptacle.

Insert the wheel bolt wrench handle through the eye and tighten, refer to "Jacking and Tire Changing" for further information. The tow eye must be fully seated to the attaching bracket through the lower front fascia as shown. If the tow eye is not fully seated to the attaching bracket, the vehicle should not be towed.

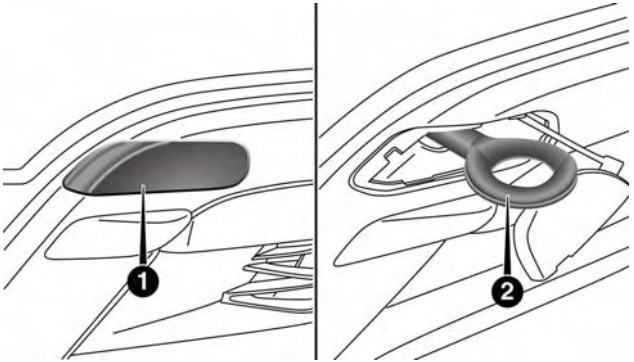

Front Tow Eye Installation

1 — Access Door
2 — Tow Eye

Rear Tow Eye Installation

The rear tow eye receptacle is located behind a access door on the rear bumper fascia.

To install the tow eye, open the access door using the vehicle key or a small screwdriver, and thread the tow eye into the receptacle.

Insert the wheel bolt wrench handle through the eye and tighten, refer to "Jacking and Tire Changing" for further information. The tow eye must be fully seated to the attaching bracket through the lower rear fascia. If the tow eye is not fully seated to the attaching bracket, the vehicle should not be towed.

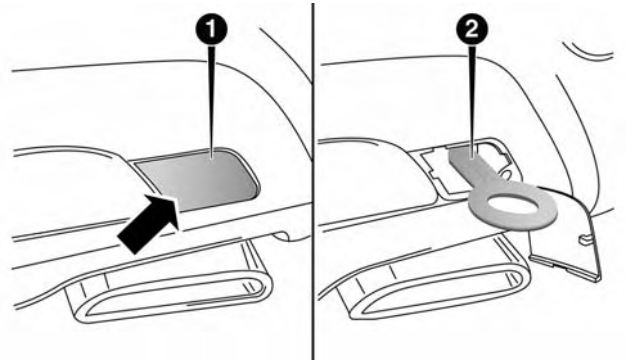

Rear Tow Eye Installation

1 — Access Door
2 — Tow Eye

ENHANCED ACCIDENT RESPONSE SYSTEM (EARS)

This vehicle is equipped with an Enhanced Accident Response System.

Please refer to "Occupant Restraint Systems" in "Safety" for further information on the Enhanced Accident Response System (EARS) function.

EVENT DATA RECORDER (EDR)

This vehicle is equipped with an Event Data Recorder (EDR). The main purpose of an EDR is to record data that will assist in understanding how a vehicle's systems performed under certain crash or near crash-like situations, such as an air bag deployment or hitting a road obstacle.

Please refer to "Occupant Restraint Systems" in "Safety" for further information on the Event Data Recorder (EDR).

MAINTAINING AND CARING FOR YOUR VEHICLE

CONTENTS

- EMISSIONS INSPECTION AND MAINTENANCE PROGRAMS 343
- REPLACEMENT PARTS 344
- DEALER SERVICE 344
- MAINTENANCE SCHEDULE 344
  - Maintenance Chart 346
- ENGINE COMPARTMENT — 1.4L TURBO ENGINE 353
- ENGINE COMPARTMENT — 2.4L ENGINE. . .354
- MAINTENANCE PROCEDURES 354
  - Engine Oil 355
  - Engine Oil Filter 357
  - Engine Air Cleaner Filter 357
  - Maintenance-Free Battery 358
  - Air Conditioner Maintenance 358
  - Body Lubrication 360
  - Wiper Blades 360
  - Adding Washer Fluid 362
  - Exhaust System 362
  - Cooling System 364
  - Brake System 368
  - Manual Transmission — If Equipped 370
  - Automatic Transmission — If Equipped 371
  - Appearance Care And Protection From Corrosion 372
- RAISING THE VEHICLE 379
- TIRE SAFETY INFORMATION 380
  - Tire Markings 380
  - Tire Identification Number (TIN). 383

- Tire Terminology And Definitions 384
- Tire Loading And Tire Pressure 384

■ TIRES — GENERAL INFORMATION 389

- Tire Pressure 389
- Tire Inflation Pressures 390
- Tire Pressures For High Speed Operation . . .391
- Radial Ply Tires 391
- Tire Types 392
- Run Flat Tires — If Equipped 393
- Spare Tires — If Equipped 393
- Tire Spinning 394
- Tread Wear Indicators 394
- Life Of Tire 395
- Replacement Tires 395

■ TIRE CHAINS (TRACTION DEVICES) 397

■ DEPARTMENT OF TRANSPORTATION UNIFORM TIRE QUALITY GRADES 398

- Treadwear. 398
- Traction Grades 398
- Temperature Grades. 398

■ TIRE ROTATION RECOMMENDATIONS 399

■ STORING THE VEHICLE 400

EMISSIONS INSPECTION AND MAINTENANCE PROGRAMS

In some localities, it may be a legal requirement to pass an inspection of your vehicle's emissions control system. Failure to pass could prevent vehicle registration.

For states that require an Inspection and Maintenance (I/M), this check verifies the "Malfunction Indicator Light (MIL)" is functioning and is not on when the engine is running, and that the OBD II system is **ready** for testing.

Normally, the OBD II system will be **ready**. The OBD II system may **not** be ready if your vehicle was recently serviced, or recently had a dead battery or a battery replacement. If the OBD II system should be determined **not ready** for the I/M test, your vehicle may fail the test.

Your vehicle has a simple ignition actuated test, which you can use prior to going to the test station. To check if your vehicle's OBD II system is **ready**, you must do the following:

1. Cycle the ignition to the ON mode, but do not crank or start the engine.

NOTE: If you crank or start the engine, you will have to start this test over.

2. As soon as you cycle the ignition to the ON mode, you will see the "Malfunction Indicator Light (MIL)" symbol come on as part of a normal bulb check.

3. Approximately 15 seconds later, one of two things will happen:

- The MIL will flash for about 10 seconds and then return to being fully illuminated until you cycle the ignition OFF or start the engine. This means that your vehicle's OBD II system is **not ready** and you should **not** proceed to the I/M station.
- The MIL will not flash at all and will remain fully illuminated until you place the ignition in the off position or start the engine. This means that your vehicle's OBD II system is **ready** and you can proceed to the I/M station.

If your OBD II system is **not ready,** you should see your authorized dealer or repair facility. If your vehicle was recently serviced or had a battery failure or replacement, you may need to do nothing more than drive your vehicle as you normally would in order for your

OBD II system to update. A recheck with the above test routine may then indicate that the system is now **ready**.

Regardless of whether your vehicle's OBD II system is ready or not, if the MIL is illuminated during normal vehicle operation you should have your vehicle serviced before going to the I/M station. The I/M station can fail your vehicle because the MIL is on with the engine running.

REPLACEMENT PARTS

Use of genuine parts for normal/scheduled maintenance and repairs is highly recommended to ensure the designed performance. Damage or failures caused by the use of parts which are not quality-equivalent to genuine parts for maintenance and repairs will not be covered by the manufacturer's warranty.

DEALER SERVICE

Your authorized dealer has the qualified service personnel, special tools, and equipment to perform all service operations in an expert manner. Service Manuals are available which include detailed service information for your vehicle. Refer to these Service Manuals before attempting any procedure yourself.

NOTE: Intentional tampering with emissions control systems may void your warranty and could result in civil penalties being assessed against you.

WARNING!

You can be badly injured working on or around a motor vehicle. Only do service work for which you have the knowledge and the proper equipment. If you have any doubt about your ability to perform a service job, take your vehicle to a competent mechanic.

MAINTENANCE SCHEDULE

Your vehicle is equipped with an automatic oil change indicator system. The oil change indicator system will remind you that it is time to take your vehicle in for scheduled maintenance.

Based on engine operation conditions, the oil change indicator message will illuminate in the instrument cluster. This means that service is required for your vehicle. Operating conditions such as frequent short-trips, trailer tow and extremely hot or cold ambient temperatures will influence when the "Change Oil" or "Oil Change Required" message is displayed. Severe

Operating Conditions can cause the change oil message to illuminate as early as 3,500 miles (5,600 km) since last reset. Have your vehicle serviced as soon as possible, within the next 500 miles (805 km).

Your authorized dealer will reset the oil change indicator message after completing the scheduled oil change. If a scheduled oil change is performed by someone other than your authorized dealer, the message can be reset by referring to the steps described under "Instrument Cluster Display" in "Getting To Know Your Instrument Panel" for further information.

NOTE: Under no circumstances should oil change intervals exceed 10,000 miles (16,000 km), twelve months or 350 hours of engine run time, whichever comes first. The 350 hours of engine run or idle time is generally only a concern for fleet customers.

Severe Duty All Models

Change Engine Oil at 4,000 miles (6,500 km) if the vehicle is operated in a dusty and off road environment or is operated predominately at idle or only very low engine RPM's. This type of vehicle use is considered Severe Duty.

NOTE: The Oil Change Indicator will not illuminate under these conditions.

Once A Month Or Before A Long Trip:

- Check engine oil level.
- Check windshield washer fluid level.
- Check the tire inflation pressures and look for unusual wear or damage.
- Check the fluid levels of the coolant reservoir, and brake master cylinder reservoir, and fill as needed.
- Check function of all interior and exterior lights.

Maintenance Chart

Required Maintenance Intervals

At Every Oil Change Interval As Indicated By Oil Change Indicator System:
Change oil and filter.
Inspect battery and clean and tighten terminals as required.
Inspect brake pads, shoes, rotors, drums, and hoses.
Inspect engine cooling system protection and hoses.
Check and adjust hand brake.
Inspect exhaust system.
Inspect engine air filter if using in dusty or off-road conditions.

Refer to the “Maintenance Chart” on the following page for the required maintenance intervals.

Mileage or time passed (whichever comes first)	10,000	20,000	30,000	40,000	50,000	60,000	70,000	80,000	90,000	100,000	110,000	120,000	130,000	140,000	150,000
Or Years:	1	2	3	4	5	6	7	8	9	10	11	12	13	14	15
Or Kilometers:	16,000	32,000	48,000	64,000	80,000	96,000	112,000	128,000	144,000	160,000	176,000	192,000	208,000	224,000	240,000
Check tire condition/wear and adjust pressure, if necessary, check TIREKIT expiration date (if provided).	•	•	•	•	•	•	•	•	•	•	•	•	•	•	•
Check operation of lighting system (headlamps, direction indicators, hazard warning lights, luggage compartment, passenger compartment, glove compartment, instrument panel warning lights, etc.).	•	•	•	•	•	•	•	•	•	•	•	•	•	•	•
Check and, if necessary, top up fluid levels (brakes/ hydraulic clutch, windshield washer, battery, engine coolant, etc.).	•	•	•	•	•	•	•	•	•	•	•	•	•	•	•
Check engine control system operation (via diagnostic tool).	•	•	•	•	•	•	•	•	•	•	•	•	•	•	•

Mileage or time passed (whichever comes first)	10,000	20,000	30,000	40,000	50,000	60,000	70,000	80,000	90,000	100,000	110,000	120,000	130,000	140,000	150,000
Or Years:	1	2	3	4	5	6	7	8	9	10	11	12	13	14	15
Or Kilometers:	16,000	32,000	48,000	64,000	80,000	96,000	112,000	128,000	144,000	160,000	176,000	192,000	208,000	224,000	240,000
Visually inspect condition of: exterior bodywork, underbody protection, pipes and hoses (exhaust - fuel system - brakes), rubber elements (boots, sleeves, bushings, etc.).		•		•		•		•		•		•		•	
Check windshield/rear window wiper blade position/wear.	•		•		•		•		•		•		•		•
Check operation of windshield washer system and adjust jets if necessary.	•		•		•		•		•		•		•		•
Check cleanliness of hood and tailgate locks and cleanliness and lubrication of linkages.	•		•		•		•		•		•		•		•
Visually check the condition and wear of the front and rear brakes.	•	•	•	•	•	•	•	•	•	•	•	•	•	•	•

Mileage or time passed (whichever comes first)	10,000	20,000	30,000	40,000	50,000	60,000	70,000	80,000	90,000	100,000	110,000	120,000	130,000	140,000	150,000
Or Years:	1	2	3	4	5	6	7	8	9	10	11	12	13	14	15
Or Kilometers:	16,000	32,000	48,000	64,000	80,000	96,000	112,000	128,000	144,000	160,000	176,000	192,000	208,000	224,000	240,000
Check the front suspension, tie rods, CV joints and replace if necessary.		•		•		•		•		•		•		•	
Visual inspect the condition of the accessory drive belt.				•				•				•			
Check the tension of the accessory drive belt.		•		•		•		•		•		•		•	
Replace the accessory drive belt.															•
Inspect and replace PCV valve if necessary.										•					
Change engine oil and replace oil filter. *	In accordance with Oil Change Indicator System OR Severe Duty Mileage, whichever occurs first.														
Inspect the PTU fluid level.				•				•				•			
Inspect the rear differential fluid level.				•				•				•			
Replace spark plugs (1.4L Turbo engine). **			•			•			•			•			•

Mileage or time passed (whichever comes first)	10,000	20,000	30,000	40,000	50,000	60,000	70,000	80,000	90,000	100,000	110,000	120,000	130,000	140,000	150,000
Or Years:	1	2	3	4	5	6	7	8	9	10	11	12	13	14	15
Or Kilometers:	16,000	32,000	48,000	64,000	80,000	96,000	112,000	128,000	144,000	160,000	176,000	192,000	208,000	224,000	240,000
Replace spark plugs (2.4L engine). **										●					
Replace engine air filter. #			●			●			●			●			●
Replace brake fluid every two years.		●		●		●		●		●		●		●	
Replace cabin filter.	○	●	○	●	○	●	○	●	○	●	○	●	○	●	○
Change the manual transmission fluid if using your vehicle for any of the following: trailer towing, heavy loading, taxi, police, delivery service (commercial service), off-road, desert operation or more than 50% of your driving is at sustained speeds during hot weather, above 90°F (32°C).					●										●

Mileage or time passed (whichever comes first)	10,000	20,000	30,000	40,000	50,000	60,000	70,000	80,000	90,000	100,000	110,000	120,000	130,000	140,000	150,000
Or Years:	1	2	3	4	5	6	7	8	9	10	11	12	13	14	15
Or Kilometers:	16,000	32,000	48,000	64,000	80,000	96,000	112,000	128,000	144,000	160,000	176,000	192,000	208,000	224,000	240,000
Flush and replace the engine coolant at 10 years or 150,000 miles (240,000 km) whichever comes first.										•					•
Replace the timing belt (1.4L Turbo Engine).															•

○ Recommend replacement

• Mandatory service

The engine air cleaner should be inspected at every oil change if used in dusty areas.

* The oil and oil filter replacement must be carried out when indicated by a warning light or message on the instrument panel, or in any case should not exceed 1 year or 10,000 miles (16,000 km).

** The spark plug change is distance based only, yearly intervals do not apply. The following are essential to ensure correct operation and prevent serious damage to the engine:

- Only use spark plugs of the same make and type which are specially certified for such engines (refer to "Fluids, Lubricants, And Genuine Parts" in "Technical Data" for further information).
- Strictly comply with the spark plug replacement interval given in the "Maintenance Chart" for spark plug replacement.
- Contact your authorized dealer if you have any questions.

WARNING!

- **You can be badly injured working on or around a motor vehicle. Do only service work for which you have the knowledge and the right equipment. If you have any doubt about your ability to perform a service job, take your vehicle to a competent mechanic.**
- **Failure to properly inspect and maintain your vehicle could result in a component malfunction and effect vehicle handling and performance. This could cause an accident.**

ENGINE COMPARTMENT — 1.4L TURBO ENGINE

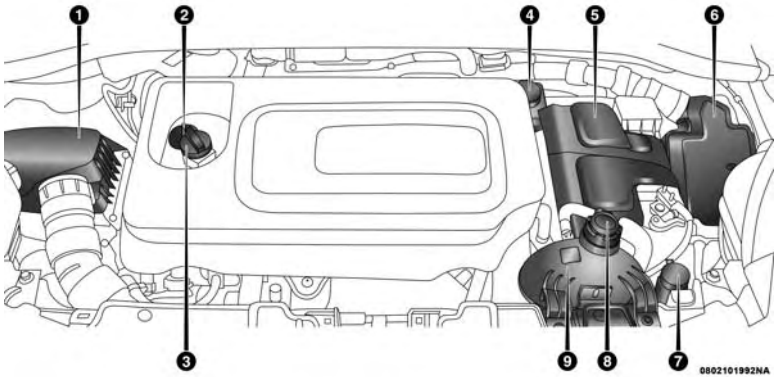

1 — Air Cleaner Filter
2 — Engine Oil Dipstick
3 — Oil Fill Cap
4 — Brake Fluid Reservoir
5 — Battery
6 — Power Distribution Center (Fuses)
7 — Washer Fluid Reservoir
8 — Coolant Pressure Bottle Cap
9 — Coolant Pressure Bottle

ENGINE COMPARTMENT — 2.4L ENGINE

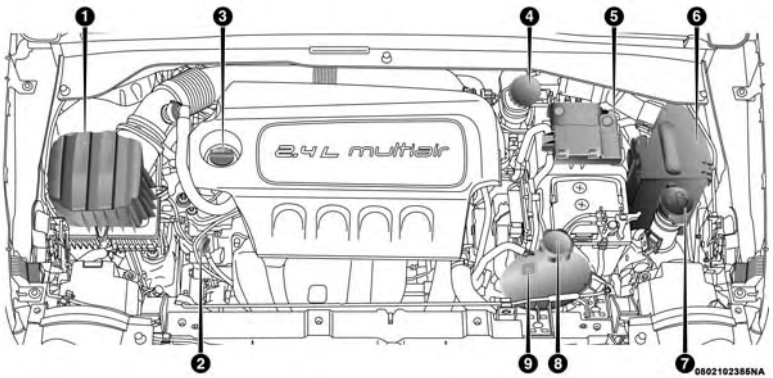

1 — Engine Air Cleaner Filter
2 — Engine Oil Dipstick
3 — Engine Oil Fill Cap
4 — Brake Fluid Reservoir
5 — Battery
6 — Power Distribution Center (Fuses)
7 — Washer Fluid Reservoir
8 — Coolant Pressure Bottle Cap
9 — Coolant Pressure Bottle

MAINTENANCE PROCEDURES

The pages that follow contain the **required** maintenance services determined by the engineers who designed your vehicle.

Besides those maintenance items specified in the fixed maintenance schedule, there are other components which may require servicing or replacement in the future.

CAUTION!

- **Failure to properly maintain your vehicle or perform repairs and service when necessary could result in more costly repairs, damage to other components or negatively impact vehicle performance. Immediately have potential malfunctions examined by an authorized dealer or qualified repair center.**
- **Your vehicle has been built with improved fluids that protect the performance and durability of your vehicle and also allow extended maintenance intervals. Do not use chemical flushes in these components as the chemicals can damage your engine, transmission, or air conditioning. Such damage is not covered by the New Vehicle Limited Warranty. If a flush is needed because of component malfunction, use only the specified fluid for the flushing procedure.**

Engine Oil

Checking Oil Level

To assure proper engine lubrication, the engine oil must be maintained at the correct level. Check the oil level at regular intervals, such as every fuel stop. The best time to check the engine oil level is approximately five minutes after a fully warmed engine is shut off. Do not check oil level before starting the engine after it has sat overnight. Checking engine oil level when the engine is cold will give you an incorrect reading.

Checking the oil while the vehicle is on level ground, and approximately five minutes after a fully warmed engine is shut off, will improve the accuracy of the oil level readings. Maintain the oil level between the range markings on the dipstick. The safe range is indicated by a crosshatch zone. Adding 1 quart (0.9 Liters) of oil when the reading is at the low end of the indicated range will result in the oil level at the full end of the indicator range.

CAUTION!

Do not overfill the engine with oil. Overfilling the engine with oil will cause oil aeration, which can lead to loss of oil pressure and an increase in oil temperature. This loss of oil pressure and increased oil temperature could damage your engine.

Change Engine Oil

The oil change indicator system will remind you that it is time to take your vehicle in for scheduled maintenance. Refer to the "Maintenance Schedule" for further information.

NOTE: Under no circumstances should oil change intervals exceed 10,000 miles (16,000 km), twelve months or 350 hours of engine run time, whichever comes first. The 350 hours of engine run or idle time is generally only a concern for fleet customers.

Engine Oil Selection — 1.4L Turbo Engine

For best performance and maximum protection for turbocharged engines under all types of operating conditions, the manufacturer recommends synthetic engine oils that are API Certified and meet the requirements of FCA Material Standard MS-12991.

Engine Oil Selection — 2.4L Engine

For best performance and maximum protection under all types of operating conditions, the manufacturer only recommends 0W-20 engine oils that are API Certified and meet the requirements of FCA Material Standard MS-6395.

Engine Oil Viscosity (SAE Grade) — 1.4L Turbo Engine

Mopar SAE 5W-40 synthetic engine oil is recommended for all operating temperatures. This engine oil improves low temperature starting and vehicle fuel economy. Your engine oil filler cap also states the recommended engine oil viscosity grade for your engine.

Lubricants which do not have both the engine oil certification mark and the correct SAE viscosity grade number should not be used.

Engine Oil Viscosity (SAE Grade) — 2.4L Engine

Mopar SAE 0W-20 engine oil is recommended for all operating temperatures. This engine oil improves low temperature starting and vehicle fuel economy. Your engine oil filler cap also states the recommended engine oil viscosity grade for your engine.

Lubricants which do not have both the engine oil certification mark and the correct SAE viscosity grade number should not be used.

Materials Added To Engine Oil

The manufacturer strongly recommends against the addition of any additives (other than leak detection

dyes) to the engine oil. Engine oil is an engineered product and its performance may be impaired by supplemental additives.

Disposing Of Used Engine Oil And Oil Filters

Care should be taken in disposing of used engine oil and oil filters from your vehicle. Used oil and oil filters, indiscriminately discarded, can present a problem to the environment. Contact your authorized dealer, service station or governmental agency for advice on how and where used oil and oil filters can be safely discarded in your area.

Engine Oil Filter

The engine oil filter should be replaced with a new filter at every engine oil change.

Engine Oil Filter Selection

This manufacturer's engines have a full-flow type disposable oil filter. Use a filter of this type for replacement. The quality of replacement filters varies considerably. Only high quality filters should be used to assure most efficient service. Mopar engine oil filters are high quality oil filters and are recommended.

Engine Air Cleaner Filter

Refer to the "Maintenance Schedule" for the proper maintenance intervals.

WARNING!

The air induction system (air cleaner, hoses, etc.) can provide a measure of protection in the case of engine backfire. Do not remove the air induction system (air cleaner, hoses, etc.) unless such removal is necessary for repair or maintenance. Make sure that no one is near the engine compartment before starting the vehicle with the air induction system (air cleaner, hoses, etc.) removed. Failure to do so can result in serious personal injury.

Engine Air Cleaner Filter Selection

The quality of replacement engine air cleaner filters varies considerably. Only high quality filters should be used to assure most efficient service. Mopar engine air cleaner filters are a high quality filter and are recommended.

Maintenance-Free Battery

Your vehicle is equipped with a maintenance-free battery. You will never have to add water, nor is periodic maintenance required.

WARNING!

- **Battery fluid is a corrosive acid solution and can burn or even blind you. Do not allow battery fluid to contact your eyes, skin, or clothing. Do not lean over a battery when attaching clamps. If acid splashes in eyes or on skin, flush the area immediately with large amounts of water. Refer to "Jump-Starting Procedures" in the "In Case Of Emergency" section for further information.**
- **Battery gas is flammable and explosive. Keep flame or sparks away from the battery. Do not use a booster battery or any other booster source with an output greater than 12 Volts. Do not allow cable clamps to touch each other.**
- **Battery posts, terminals, and related accessories contain lead and lead compounds. Wash hands after handling.**

(Continued)

WARNING! ***(Continued)***

- **The battery in this vehicle has a vent hose that should not be disconnected and should only be replaced with a battery of the same type (vented).**

CAUTION!

- **It is essential when replacing the cables on the battery that the positive cable is attached to the positive post and the negative cable is attached to the negative post. Battery posts are marked positive (+) and negative (-) and are identified on the battery case. Cable clamps should be tight on the terminal posts and free of corrosion.**
- **If a "fast charger" is used while the battery is in the vehicle, disconnect both vehicle battery cables before connecting the charger to the battery. Do not use a "fast charger" to provide starting voltage.**

Air Conditioner Maintenance

For best possible performance, your air conditioner should be checked and serviced by an authorized dealer at the start of each warm season. This service should

include cleaning of the condenser fins and a performance test. Drive belt tension should also be checked at this time.

WARNING!

- **Use only refrigerants and compressor lubricants approved by the manufacturer for your air conditioning system. Some unapproved refrigerants are flammable and can explode, injuring you. Other unapproved refrigerants or lubricants can cause the system to fail, requiring costly repairs. Refer to Warranty Information Book for further warranty information.**
- **The air conditioning system contains refrigerant under high pressure. To avoid risk of personal injury or damage to the system, adding refrigerant or any repair requiring lines to be disconnected should be done by an experienced technician.**

CAUTION!

Do not use chemical flushes in your air conditioning system as the chemicals can damage your air conditioning components. Such damage is not covered by the New Vehicle Limited Warranty.

Refrigerant Recovery And Recycling HFO 1234yf

HFO 1234yf Air Conditioning Refrigerant is a hydrofluoolefine HFO that is endorsed by the Environmental Protection Agency and is an ozone-saving product. The manufacturer recommends that air conditioning service be performed by authorized dealer using recovery and recycling equipment.

NOTE: Use only manufacturer approved A/C system PAG compressor oil, and refrigerants.

A/C Air Filter

See your Authorized Dealer for service.

Body Lubrication

Locks and all body pivot points, including such items as seat tracks, door hinge pivot points and rollers, liftgate, tailgate, decklid, sliding doors and hood hinges, should be lubricated periodically with a lithium based grease, such as Mopar Spray White Lube to assure quiet, easy operation and to protect against rust and wear. Prior to the application of any lubricant, the parts concerned should be wiped clean to remove dust and grit; after lubricating excess oil and grease should be removed. Particular attention should also be given to hood latching components to ensure proper function. When performing other underhood services, the hood latch, release mechanism and safety catch should be cleaned and lubricated.

The external lock cylinders should be lubricated twice a year, preferably in the Fall and Spring. Apply a small amount of a high quality lubricant, such as Mopar Lock Cylinder Lubricant directly into the lock cylinder.

Wiper Blades

Clean the rubber edges of the wiper blades, the windshield, and rear window periodically with a sponge or soft cloth and a mild nonabrasive cleaner. This will remove accumulations of salt, waxes, or road film, and help reduce streaking and smearing.

Operation of the wipers on dry glass for long periods may cause deterioration of the wiper blades. Always use washer fluid when using the wipers to remove salt or dirt from a dry windshield or rear window.

Avoid using the wiper blades to remove frost or ice from the windshield or rear window. Make sure that they are not frozen to the glass before turning them on to avoid damaging the blade. Keep the wiper blade out of contact with petroleum products such as engine oil, gasoline, etc.

NOTE: Life expectancy of wiper blades varies depending on geographical area and frequency of use. Poor performance of blades may be present with chattering, marks, water lines, or wet spots. If any of these conditions are present, clean the wiper blades or replace as necessary.

Service Position Strategy

The service position allows the wiper blades to be placed in a position that allows the wiper blades to be easily changed.

To enable the Service Position Strategy, the wipers must be in the Park position before placing the ignition in the OFF mode.

Service mode must be activated within two minutes after the ignition is placed in the OFF mode.

To have a correct activation of strategy, the Service Position command (antipanic) must be active for at least half a second.

At every valid activation of Service Position command, the wiper blades are activated for 250 ms.

The Service Position command can be repeated several times to bring the blades into the desired position, up to a maximum of three times.

After three subsequent activations the strategy is disabled.

Function Deactivation:

The functionality is reset if:

- The ignition is turned to the RUN mode.
- Number of subsequent activations is three.
- Two minutes timer has expired after cycling the ignition OFF.

NOTE: When turning the ignition ON, the blades will go into the parking position.

Front Wiper Blade Removal/Installation

1. Lift the front wiper arm upward to raise the wiper blade off of the windshield.
2. Push the release button on the arm of the wiper blade.
3. Push the wiper blade up and remove it.

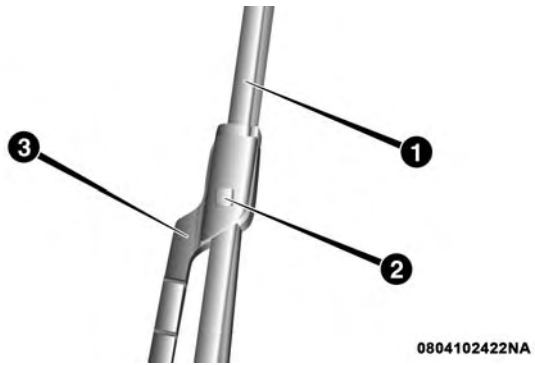

1 — Wiper Blade
2 — Release Button
3 — Wiper Arm

4. Install the wiper blade and firmly push the wiper blade until it snaps into place.

Rear Wiper Blade Removal/Installation

1. Carefully lift the rear wiper arm upward to raise the wiper blade off of the liftgate glass.
2. Grab and hold the wiper arm closest to the wiper blade end while pushing the wiper blade towards the liftgate glass to unsnap the blade pivot pin from the wiper blade holder on the wiper arm.
3. Install the wiper blade pivot pin into the wiper blade holder at the end of the wiper arm, and firmly push the wiper blade until it snaps into place.

Adding Washer Fluid

The windshield washer fluid reservoir is located in the engine compartment, and the fluid level should be checked at regular intervals. Fill the reservoir with windshield washer solvent (not engine coolant/ anti-freeze). Refer to "Engine Compartment" in this section for further information.

WARNING!

Commercially available windshield washer solvents are flammable. They could ignite and burn you. Care must be exercised when filling or working around the washer solution.

Exhaust System

The best protection against carbon monoxide entry into the vehicle body is a properly maintained engine exhaust system.

If you notice a change in the sound of the exhaust system; or if the exhaust fumes can be detected inside the vehicle; or when the underside or rear of the vehicle is damaged; have an authorized technician inspect the complete exhaust system and adjacent body areas for broken, damaged, deteriorated, or mispositioned parts. Open seams or loose connections could permit exhaust fumes to seep into the passenger compartment. In addition, have the exhaust system inspected each time the vehicle is raised for lubrication or oil change. Replace as required.

WARNING!

- **Exhaust gases can injure or kill. They contain carbon monoxide (CO), which is colorless and odorless. Breathing it can make you unconscious and can eventually poison you. To avoid breathing CO, refer to "Safety Tips/Exhaust Gas" in the "Safety" section for further information.**
- **A hot exhaust system can start a fire if you park over materials that can burn. Such materials might be grass or leaves coming into contact with your exhaust system. Do not park or operate your vehicle in areas where your exhaust system can contact anything that can burn.**

CAUTION!

- **The catalytic converter requires the use of unleaded fuel only. Leaded gasoline will destroy the effectiveness of the catalyst as an emissions control device and may seriously reduce engine performance and cause serious damage to the engine.**
- **Damage to the catalytic converter can result if your vehicle is not kept in proper operating**

(Continued)

CAUTION! ***(Continued)***

condition. In the event of engine malfunction, particularly involving engine misfire or other apparent loss of performance, have your vehicle serviced promptly. Continued operation of your vehicle with a severe malfunction could cause the converter to overheat, resulting in possible damage to the converter and vehicle.

Under normal operating conditions, the catalytic converter will not require maintenance. However, it is important to keep the engine properly tuned to assure proper catalyst operation and prevent possible catalyst damage.

NOTE: Intentional tampering with emissions control systems can result in civil penalties being assessed against you.

In unusual situations involving grossly malfunctioning engine operation, a scorching odor may suggest severe and abnormal catalyst overheating. If this occurs, stop the vehicle, turn off the engine and allow it to cool. Service, including a tune-up to manufacturer's specifications, should be obtained immediately.

To minimize the possibility of catalytic converter damage:

- Do not shut off the engine or interrupt the ignition, when the transmission is in gear and the vehicle is in motion.
- Do not try to start the engine by pushing or towing the vehicle.
- Do not idle the engine with any spark plug wires disconnected or removed, such as when diagnostic testing, or for prolonged periods during very rough idle or malfunctioning operating conditions.

Cooling System

WARNING!

- **Turn vehicle off and disconnect the fan motor lead before working near the radiator cooling fan.**
- **You or others can be badly burned by hot engine coolant (antifreeze) or steam from your radiator. If you see or hear steam coming from under the hood, do not open the hood until the radiator has had time to cool. Never open a cooling system**

(Continued)

WARNING! ***(Continued)***

pressure cap when the radiator or coolant bottle is hot.

- **Keep hands, tools, clothing, and jewelry away from the radiator cooling fan when the hood is raised. The fan starts automatically and may start at any time, whether the engine is running or not.**
- **When working near the radiator cooling fan, disconnect the fan motor lead or turn the ignition switch to the OFF position. The fan is temperature controlled and can start at any time the ignition switch is in the ON position.**
- **You or others can be badly burned by hot engine coolant (antifreeze) or steam from your radiator. If you see or hear steam coming from under the hood, do not open the hood until the radiator has had time to cool. Never try to open a cooling system pressure cap when the radiator is hot.**

Coolant Checks

Check engine coolant (antifreeze) protection every 12 months (before the onset of freezing weather, where applicable). If the engine coolant (antifreeze) is dirty or rusty in appearance, the system should be drained,

flushed and refilled with fresh engine coolant (antifreeze). Check the front of the A/C condenser for any accumulation of bugs, leaves, etc. If dirty, clean by gently spraying water from a garden hose vertically down the face of the condenser.

Cooling System — Drain, Flush And Refill

NOTE: Some vehicles require special tools to add coolant properly. Failure to fill these systems properly could lead to severe internal engine damage. If any coolant is needed to be added to the system, please contact your local authorized dealer.

If the engine coolant (antifreeze) is dirty or contains visible sediment, have an authorized dealer clean and flush with OAT coolant (antifreeze) (conforming to MS.90032).

Refer to the "Maintenance Schedule" for the proper maintenance intervals.

Selection Of Coolant

Refer to "Fluids, Lubricants, And Genuine Parts" in the "Technical Data" section for further information.

CAUTION!

- **Mixing of engine coolant (antifreeze) other than specified Organic Additive Technology (OAT) engine coolant (antifreeze), may result in engine damage and may decrease corrosion protection. Organic Additive Technology (OAT) engine coolant is different and should not be mixed with Hybrid Organic Additive Technology (HOAT) engine coolant (antifreeze) or any "globally compatible" coolant (antifreeze). If a non-OAT engine coolant (antifreeze) is introduced into the cooling system in an emergency, the cooling system will need to be drained, flushed, and refilled with fresh OAT coolant (conforming to MS.90032), by an authorized dealer as soon as possible.**
- **Do not use water alone or alcohol-based engine coolant (antifreeze) products. Do not use additional rust inhibitors or antirust products, as they may not be compatible with the engine coolant and may plug the radiator.**
- **This vehicle has not been designed for use with propylene glycol-based engine coolant (antifreeze). Use of propylene glycol-based engine coolant (antifreeze) is not recommended.**

Adding Coolant

Your vehicle has been built with an improved engine coolant (OAT coolant conforming to MS.90032) that allows extended maintenance intervals. This engine coolant (antifreeze) can be used up to ten years or 150,000 miles (240,000 km) before replacement. To prevent reducing this extended maintenance period, it is important that you use the same engine coolant (OAT coolant conforming to MS.90032) throughout the life of your vehicle.

Please review these recommendations for using Organic Additive Technology (OAT) engine coolant (antifreeze) that meets the requirements of FCA Material Standard MS.90032. When adding engine coolant (antifreeze):

- We recommend using Mopar Antifreeze/Coolant 10 Year/150,000 Mile Formula OAT (Organic Additive Technology) that meets the requirements of FCA Material Standard MS.90032.
- Mix a minimum solution of 50% OAT engine coolant that meets the requirements of FCA Material Standard MS.90032 and distilled water. Use higher concentrations (not to exceed 70%) if temperatures below −34°F (−37°C) are anticipated. Please contact your authorized dealer for assistance.
- Use only high purity water such as distilled or deionized water when mixing the water/engine coolant (antifreeze) solution. The use of lower quality water will reduce the amount of corrosion protection in the engine cooling system.

NOTE:

- It is the owner's responsibility to maintain the proper level of protection against freezing according to the temperatures occurring in the area where the vehicle is operated.
- Some vehicles require special tools to add coolant properly. Failure to fill these systems properly could lead to severe internal engine damage. If any coolant is needed to be added to the system, please contact your local authorized dealer.
- Mixing engine coolant (antifreeze) types is not recommended and can result in cooling system damage.

If HOAT and OAT coolant are mixed in an emergency, have a authorized dealer drain, flush, and refill with OAT coolant (conforming to MS.90032) as soon as possible.

Cooling System Pressure Cap

The cap must be fully tightened to prevent loss of engine coolant (antifreeze) and to ensure that engine coolant (antifreeze) will return to the radiator from the coolant recovery tank.

The cap should be inspected and cleaned if there is any accumulation of foreign material on the sealing surfaces.

WARNING!

- **Do not open hot engine cooling system. Never add engine coolant (antifreeze) when the engine is overheated. Do not loosen or remove the cap to cool an overheated engine. Heat causes pressure to build up in the cooling system. To prevent scalding or injury, do not remove the pressure cap while the system is hot or under pressure.**

(Continued)

WARNING! ***(Continued)***

- **Do not use a pressure cap other than the one specified for your vehicle. Personal injury or engine damage may result.**

Disposal Of Used Engine Coolant

Used ethylene glycol-based engine coolant (antifreeze) is a regulated substance requiring proper disposal. Check with your local authorities to determine the disposal rules for your community. To prevent ingestion by animals or children, do not store ethylene glycol-based engine coolant in open containers or allow it to remain in puddles on the ground. If ingested by a child or pet, seek emergency assistance immediately. Clean up any ground spills immediately.

Coolant Level

The coolant expansion bottle provides a quick visual method for determining that the coolant level is adequate. With the engine off and cold, the level of the engine coolant (antifreeze) in the bottle should be between the “MIN” and “MAX” marks.

As long as the engine operating temperature is satisfactory, the coolant bottle need only be checked once a month.

When additional engine coolant (antifreeze) is needed to maintain the proper level, it should be added to the coolant bottle. Do not overfill.

Points To Remember

NOTE: When the vehicle is stopped after a few miles/kilometers of operation, you may observe vapor coming from the front of the engine compartment. This is normally a result of moisture from rain, snow, or high humidity accumulating on the radiator and being vaporized when the thermostat opens, allowing hot engine coolant (antifreeze) to enter the radiator.

If an examination of your engine compartment shows no evidence of radiator or hose leaks, the vehicle may be safely driven. The vapor will soon dissipate.

- Do not overfill the coolant expansion bottle.
- Check the coolant freeze point in the radiator and in the coolant expansion bottle. If engine coolant (antifreeze) needs to be added, the contents of the coolant expansion bottle must also be protected against freezing.
- If frequent engine coolant (antifreeze) additions are required, the cooling system should be pressure tested for leaks.
- Maintain engine coolant (antifreeze) concentration at a minimum of 50% OAT coolant (conforming to MS.90032) and distilled water for proper corrosion protection of your engine which contains aluminum components.
- Keep the front of the radiator clean. If your vehicle is equipped with air conditioning, keep the front of the condenser clean.
- Do not change the thermostat for Summer or Winter operation. If replacement is ever necessary, install ONLY the correct type thermostat. Other designs may result in unsatisfactory engine coolant (antifreeze) performance, poor gas mileage, and increased emissions.

Brake System

In order to assure brake system performance, all brake system components should be inspected periodically. Refer to the “Maintenance Schedule” for the proper maintenance intervals.

WARNING!

Riding the brakes can lead to brake failure and possibly a collision. Driving with your foot resting or riding on the brake pedal can result in abnormally high brake temperatures, excessive lining wear, and possible brake damage. Riding the brakes may also reduce braking capacity in an emergency.

Brake Master Cylinder

The fluid level in the master cylinder should be checked when performing under hood services, or immediately if the "Brake Warning Light" is on.

Be sure to clean the top of the master cylinder area before removing the cap. If necessary, add fluid to bring the fluid level up to the requirements described on the brake fluid reservoir. Fluid level can be expected to fall as the brake pads wear. The brake fluid level should be checked when the pads are replaced. However, low fluid level may be caused by a leak and a checkup may be needed.

NOTE: If your vehicle is equipped with a **manual transmission**, the brake fluid reservoir supplies fluid to both the brake system and the clutch release system. The two systems are separated in the reservoir, and a leak in one system will not affect the other system. The **manual transmission** clutch release system should not require fluid replacement during the life of the vehicle. If the brake fluid reservoir is low and the brake system does not indicate any leaks or other problems, it may be a result of a leak in the hydraulic clutch release system. See your local authorized dealer for service.

Use only manufacturer's recommended brake fluid. Refer to "Fluids, Lubricants, And Genuine Parts" in the "Technical Data" section for further information.

WARNING!

- **Use only manufacturer's recommended brake fluid. Refer to "Fluids, Lubricants, And Genuine Parts" in the "Technical Data" section for further information. Using the wrong type of brake fluid can severely damage your brake system and/or impair its performance. The proper type of brake fluid for your vehicle is also identified on the**

(Continued)

WARNING! *(Continued)*

original factory installed hydraulic master cylinder reservoir.

- **To avoid contamination from foreign matter or moisture, use only new brake fluid or fluid that has been in a tightly closed container. Keep the master cylinder reservoir cap secured at all times. Brake fluid in a open container absorbs moisture from the air resulting in a lower boiling point. This may cause it to boil unexpectedly during hard or prolonged braking, resulting in sudden brake failure. This could result in a collision.**
- **Overfilling the brake fluid reservoir can result in spilling brake fluid on hot engine parts, causing the brake fluid to catch fire. Brake fluid can also damage painted and vinyl surfaces, care should be taken to avoid its contact with these surfaces.**
- **Do not allow petroleum-based fluid to contaminate the brake fluid. Brake seal components could be damaged, causing partial or complete brake failure. This could result in a collision.**

CAUTION!

Use of improper brake fluids will affect overall clutch system performance. Improper brake fluids may damage the clutch system resulting in loss of clutch function and the ability to shift the transmission.

Manual Transmission — If Equipped

Lubricant Selection

Use only the manufacturers recommended transmission fluid. Refer to “Fluids, Lubricants, And Genuine Parts” in “Technical Data” for further information.

Please see your authorized dealer for service.

Fluid Level Check

Check the fluid level by removing the fill plug. The fluid level should be between the bottom of the fill hole and a point not more than 3/16 inch (4.7 mm) below the bottom of the hole.

Add fluid, if necessary, to maintain the proper level.

Please see your authorized dealer for service.

Frequency Of Fluid Change

Under normal operating conditions, the fluid installed at the factory will give satisfactory lubrication for the life of the vehicle. Fluid changes are not necessary unless lubricant has become contaminated with water.

NOTE: If contaminated with water, the fluid should be changed immediately.

Automatic Transmission — If Equipped

Selection Of Lubricant

It is important to use the proper transmission fluid to ensure optimum transmission performance and life. Use only the manufacturer's specified transmission fluid. Refer to "Fluids, Lubricants, And Genuine Parts" in "Technical Data" for fluid specifications. It is important to maintain the transmission fluid at the correct level using the recommended fluid.

NOTE: No chemical flushes should be used in any transmission; only the approved lubricant should be used.

CAUTION!

Using a transmission fluid other than the manufacturer's recommended fluid may cause deterioration in transmission shift quality and/or torque converter shudder. Refer to "Fluids, Lubricants, And Genuine Parts" in "Technical Data" for fluid specifications.

Special Additives

The manufacturer strongly recommends against using any special additives in the transmission. Automatic Transmission Fluid (ATF) is an engineered product and its performance may be impaired by supplemental additives. Therefore, do not add any fluid additives to the transmission. Avoid using transmission sealers as they may adversely affect seals.

CAUTION!

Do not use chemical flushes in your transmission as the chemicals can damage your transmission components. Such damage is not covered by the New Vehicle Limited Warranty.

Fluid Level Check

The fluid level is preset at the factory and does not require adjustment under normal operating conditions. Routine fluid level checks are not required, therefore the transmission has no dipstick. Your authorized dealer can check your transmission fluid level using special service tools. If you notice fluid leakage or transmission malfunction, visit your authorized dealer immediately to have the transmission fluid level checked. Operating the vehicle with an improper fluid level can cause severe transmission damage.

CAUTION!

If a transmission fluid leak occurs, visit your authorized dealer immediately. Severe transmission damage may occur. Your authorized dealer has the proper tools to adjust the fluid level accurately.

Fluid And Filter Changes

Under normal operating conditions, the fluid installed at the factory will provide satisfactory lubrication for the life of the vehicle.

Routine fluid and filter changes are not required. However, change the fluid and filter if the fluid becomes contaminated (with water, etc.), or if the transmission is disassembled for any reason.

Appearance Care And Protection From Corrosion

Protection Of Body And Paint From Corrosion

Vehicle body care requirements vary according to geographic locations and usage. Chemicals that make roads passable in snow and ice and those that are sprayed on trees and road surfaces during other seasons are highly corrosive to the metal in your vehicle. Outside parking, which exposes your vehicle to airborne contaminants, road surfaces on which the vehicle is operated, extreme hot or cold weather and other extreme conditions will have an adverse effect on paint, metal trim, and underbody protection.

The following maintenance recommendations will enable you to obtain maximum benefit from the corrosion resistance built into your vehicle.

What Causes Corrosion?

Corrosion is the result of deterioration or removal of paint and protective coatings from your vehicle.

The most common causes are:

- Road salt, dirt and moisture accumulation.
- Stone and gravel impact.
- Insects, tree sap and tar.
- Salt in the air near seacoast localities.
- Atmospheric fallout/industrial pollutants.

Washing

- Wash your vehicle regularly. Always wash your vehicle in the shade using Mopar Car Wash, or a mild car wash soap, and rinse the panels completely with clear water.
- If insects, tar, or other similar deposits have accumulated on your vehicle, use Mopar Super Kleen Bug and Tar Remover to remove.
- Use a high quality cleaner wax, such as Mopar Cleaner Wax to remove road film, stains and to protect your paint finish. Take care never to scratch the paint.
- Avoid using abrasive compounds and power buffing that may diminish the gloss or thin out the paint finish.

CAUTION!

- **Do not use abrasive or strong cleaning materials such as steel wool or scouring powder that will scratch metal and painted surfaces.**
- **Use of power washers exceeding 1,200 psi (8 274 kPa) can result in damage or removal of paint and decals.**
- **If the engine compartment is washed with an high pressure jet, keep it at a distance of at least 8 inches (20 centimeters) from filler surface.**

Special Care

- If you drive on salted or dusty roads, or if you drive near the ocean, hose off the undercarriage at least once a month.
- It is important that the drain holes in the lower edges of the doors, rocker panels, and trunk be kept clear and open.

- If you detect any stone chips or scratches in the paint, touch them up immediately. The cost of such repairs is considered the responsibility of the owner.
- If your vehicle is damaged due to a collision or similar cause that destroys the paint and protective coating, have your vehicle repaired as soon as possible. The cost of such repairs is considered the responsibility of the owner.
- If you carry special cargo such as chemicals, fertilizers, de-icer salt, etc., be sure that such materials are well packaged and sealed.
- If a lot of driving is done on gravel roads, consider mud or stone shields behind each wheel.
- Use Mopar Touch Up Paint on scratches as soon as possible. Your authorized dealer has touch up paint to match the color of your vehicle.

Wheel And Wheel Trim Care

All wheels and wheel trim, especially aluminum and chrome plated wheels, should be cleaned regularly using mild (neutral Ph) soap and water to maintain their luster and to prevent corrosion. Wash wheels with the same soap solution recommended for the body of the vehicle.

Your wheels are susceptible to deterioration caused by salt, sodium chloride, magnesium chloride, calcium chloride, etc., and other road chemicals used to melt ice or control dust on dirt roads. Use a soft cloth or sponge and mild soap to wipe away promptly. Do not use harsh chemicals or a stiff brush. They can damage the wheel's protective coating that helps keep them from corroding and tarnishing.

NOTE: Many aftermarket wheel cleaners contain strong acids or strong alkaline additives that can harm the wheel surface.

CAUTION!

Avoid products or automatic car washes that use acidic solutions or strong alkaline additives or harsh brushes. These products and automatic car washes may damage the wheel's protective finish. Such damage is not covered by the New Vehicle Limited Warranty. Only car wash soap, Mopar Wheel Cleaner or equivalent is recommended.

When cleaning extremely dirty wheels including excessive brake dust, care must be taken in the selection of tire and wheel cleaning chemicals and equipment to

prevent damage to the wheels. Mopar Wheel Treatment or Mopar Chrome Cleaner or their equivalent is recommended or select a non-abrasive, non-acidic cleaner for aluminum or chrome wheels. Do not use any products on Dark Vapor or Black Satin Chrome Wheels. They will permanently damage this finish and such damage is not covered by the New Vehicle Limited Warranty.

CAUTION!

Do not use scouring pads, steel wool, a bristle brush, metal polishes or oven cleaner. These products may damage the wheel's protective finish. Such damage is not covered by the New Vehicle Limited Warranty. Only car wash soap, Mopar Wheel Cleaner or equivalent is recommended.

NOTE: If you intend parking or storing your vehicle for an extended period after cleaning the wheels with wheel cleaner, drive your vehicle for a few minutes before doing so. Driving the vehicle and applying the brakes when stopping will reduce the risk of brake rotor corrosion.

Dark Vapor Or Black Satin Chrome Wheels

CAUTION!

If your vehicle is equipped with Dark Vapor or Black Satin Chrome wheels DO NOT USE wheel cleaners, abrasives or polishing compounds. They will permanently damage this finish and such damage is not covered by the New Vehicle Limited Warranty. USE ONLY MILD SOAP AND WATER WITH A SOFT CLOTH. Used on a regular basis; this is all that is required to maintain this finish.

Stain Repel Fabric Cleaning Procedure — If Equipped

Stain Repel seats may be cleaned in the following manner:

- Remove as much of the stain as possible by blotting with a clean, dry towel.
- Blot any remaining stain with a clean, damp towel.
- For tough stains, apply Mopar Total Clean, or a mild soap solution to a clean, damp cloth and remove stain. Use a fresh, damp towel to remove soap residue.

- For grease stains, apply Mopar Multi-Purpose Cleaner to a clean, damp cloth and remove stain. Use a fresh, damp towel to remove soap residue.
- Do not use any harsh solvents or any other form of protectants on Stain Repel products.

Interior Care

Use Mopar Total Clean to clean fabric upholstery and carpeting.

Use Mopar Total Clean to clean vinyl upholstery.

Mopar Total Clean is specifically recommended for leather upholstery.

Your leather upholstery can be best preserved by regular cleaning with a damp soft cloth. Small particles of dirt can act as an abrasive and damage the leather upholstery and should be removed promptly with a damp cloth. Stubborn soils can be removed easily with a soft cloth and Mopar Total Clean. Care should be taken to avoid soaking your leather upholstery with any liquid. Please do not use polishes, oils, cleaning fluids, solvents, detergents, or ammonia-based cleaners to clean your leather upholstery. Application of a leather conditioner is not required to maintain the original condition.

WARNING!

Do not use volatile solvents for cleaning purposes. Many are potentially flammable, and if used in closed areas they may cause respiratory harm.

CAUTION!

- **Direct contact of air fresheners, insect repellents, suntan lotions, or hand sanitizers to the plastic, painted, or decorated surfaces of the interior may cause permanent damage. Wipe away immediately.**
- **Damage caused by these type of products may not be covered by your New Vehicle Limited Warranty.**
- **Do not use Alcohol and Alcohol-based and/or Keton based cleaning products to clean leather seats, as damage to the seat may result.**

Cleaning Headlights

Your vehicle has plastic headlights that are lighter and less susceptible to stone breakage than glass headlights.

Plastic is not as scratch resistant as glass and therefore different lens cleaning procedures must be followed.

To minimize the possibility of scratching the lenses and reducing light output, avoid wiping with a dry cloth. To remove road dirt, wash with a mild soap solution followed by rinsing.

Do not use abrasive cleaning components, solvents, steel wool or other aggressive material to clean the lenses.

Glass Surfaces

All glass surfaces should be cleaned on a regular basis with Mopar Glass Cleaner, or any commercial household-type glass cleaner. Never use an abrasive type cleaner. Use caution when cleaning the inside rear window equipped with electric defrosters or windows equipped with radio antennas. Do not use scrapers or other sharp instrument that may scratch the elements.

When cleaning the rear view mirror, spray cleaner on the towel or cloth that you are using. Do not spray cleaner directly on the mirror.

Instrument Panel Cover

The instrument panel cover has a low glare surface which minimizes reflections on the windshield. Do not use protectants or other products which may cause undesirable reflections. Use soap and warm water to restore the low glare surface.

Instrument Panel Bezels

CAUTION!

When installing hanging air fresheners in your vehicle, read the installation instructions carefully. Some air fresheners will damage the finish of painted or decorated parts if allowed to directly contact any surface.

Cleaning Plastic Instrument Cluster Lenses

The lenses in front of the instruments in this vehicle are molded in clear plastic. When cleaning the lenses, care must be taken to avoid scratching the plastic.

1. Clean with a wet soft cloth. A mild soap solution may be used, but do not use high alcohol content or abrasive cleaners. If soap is used, wipe clean with a clean damp cloth.
2. Dry with a soft cloth.

Seat Belt Maintenance

Do not bleach, dye or clean the belts with chemical solvents or abrasive cleaners. This will weaken the fabric. Sun damage can also weaken the fabric.

If the belts need cleaning, use a mild soap solution or lukewarm water. Do not remove the belts from the vehicle to wash them. Dry with a soft cloth.

Replace the belts if they appear frayed or worn or if the buckles do not work properly.

NOTE: If the belts retract slowly, inspect the upper turning loop for soiling. If soiling is present, clean with a wet soft cloth until all residue is removed.

WARNING!

A frayed or torn belt could rip apart in a collision and leave you with no protection. Inspect the belt system periodically, checking for cuts, frays, or loose parts. Damaged parts must be replaced immediately. Do not disassemble or modify the system. Seat belt assemblies must be replaced after a collision if they have been damaged (i.e., bent retractor, torn webbing, etc.).

RAISING THE VEHICLE

In the case where it is necessary to raise the vehicle, go to an authorized dealer or service station.

The vehicle lifting points on the vehicle are marked on side skirts with symbols (▽ see example shown).

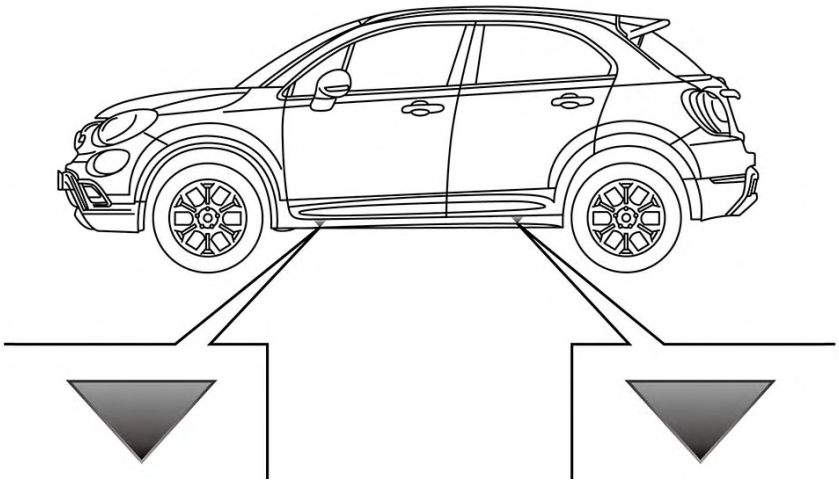

Lifting Point Locations

TIRE SAFETY INFORMATION

Tire Markings

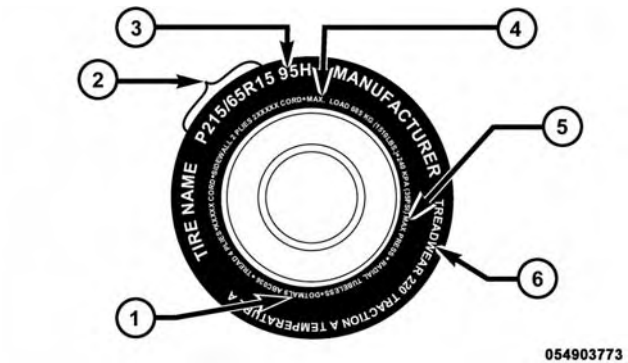

1 — U.S. DOT Safety Standards Code (TIN)
2 — Size Designation
3 — Service Description
4 — Maximum Load
5 — Maximum Pressure
6 — Treadwear, Traction and Temperature Grades

NOTE:

- P (Passenger) — Metric tire sizing is based on U.S. design standards. P-Metric tires have the letter “P” molded into the sidewall preceding the size designation. Example: P215/65R15 95H.
- European — Metric tire sizing is based on European design standards. Tires designed to this standard have the tire size molded into the sidewall beginning with the section width. The letter ″P″ is absent from this tire size designation. Example: 215/65R15 96H.
- LT (Light Truck) — Metric tire sizing is based on U.S. design standards. The size designation for LT-Metric tires is the same as for P-Metric tires except for the letters “LT” that are molded into the sidewall preceding the size designation. Example: LT235/85R16.

- Temporary spare tires are designed for temporary emergency use only. Temporary high pressure compact spare tires have the letter "T" or "S" molded into the sidewall preceding the size designation. Example: T145/80D18 103M.
- High flotation tire sizing is based on U.S. design standards and it begins with the tire diameter molded into the sidewall. Example: 31x10.5 R15 LT.

Tire Sizing Chart

EXAMPLE:

Example Size Designation: P215/65R15XL 95H, 215/65R15 96H, LT235/85R16C, T145/80D18 103M, 31x10.5 R15 LT
P = Passenger car tire size based on U.S. design standards, or **"....blank...."** = Passenger car tire based on European design standards, or **LT** = Light truck tire based on U.S. design standards, or **T or S** = Temporary spare tire or **31** = Overall diameter in inches (in)
215, 235, 145 = Section width in millimeters (mm)
65, 85, 80 = Aspect ratio in percent (%) – Ratio of section height to section width of tire, or **10.5** = Section width in inches (in)
R = Construction code – "R" means radial construction, or – "D" means diagonal or bias construction
15, 16, 18 = Rim diameter in inches (in)

EXAMPLE:

Service Description:

95 = Load Index

– A numerical code associated with the maximum load a tire can carry

H = Speed Symbol

– A symbol indicating the range of speeds at which a tire can carry a load corresponding to its load index under certain operating conditions

– The maximum speed corresponding to the speed symbol should only be achieved under specified operating conditions (i.e., tire pressure, vehicle loading, road conditions, and posted speed limits)

Load Identification:

Absence of the following load identification symbols on the sidewall of the tire indicates a Standard Load (SL) tire:

- **XL** = Extra load (or reinforced) tire, or
- **LL** = Light load tire or
- **C, D, E, F, G** = Load range associated with the maximum load a tire can carry at a specified pressure

Maximum Load – Maximum load indicates the maximum load this tire is designed to carry

Maximum Pressure – Maximum pressure indicates the maximum permissible cold tire inflation pressure for this tire

Tire Identification Number (TIN)

The TIN may be found on one or both sides of the tire; however, the date code may only be on one side. Tires with white sidewalls will have the full TIN, including the date code, located on the white sidewall side of the tire. Look for the TIN on the outboard side of black sidewall tires as mounted on the vehicle. If the TIN is not found on the outboard side, then you will find it on the inboard side of the tire.

EXAMPLE:
DOT MA L9 ABCD 0301
DOT = Department of Transportation – This symbol certifies that the tire is in compliance with the U.S. Department of Transportation tire safety standards and is approved for highway use
MA = Code representing the tire manufacturing location (two digits)
L9 = Code representing the tire size (two digits)
ABCD = Code used by the tire manufacturer (one to four digits)
03 = Number representing the week in which the tire was manufactured (two digits) – 03 means the 3rd week
01 = Number representing the year in which the tire was manufactured (two digits) – 01 means the year 2001 – Prior to July 2000, tire manufacturers were only required to have one number to represent the year in which the tire was manufactured. Example: 031 could represent the 3rd week of 1981 or 1991

Tire Terminology And Definitions

Term	Definition
B-Pillar	The vehicle B-Pillar is the structural member of the body located behind the front door.
Cold Tire Inflation Pressure	Cold tire inflation pressure is defined as the tire pressure after the vehicle has not been driven for at least three hours, or driven less than 1 mile (1.6 km) after sitting for a minimum of three hours. Inflation pressure is measured in units of PSI (pounds per square inch) or kPa (kilopascals).
Maximum Inflation Pressure	The maximum inflation pressure is the maximum permissible cold tire inflation pressure for this tire. The maximum inflation pressure is molded into the sidewall.
Recommended Cold Tire Inflation Pressure	Vehicle manufacturer's recommended cold tire inflation pressure as shown on the tire placard.
Tire Placard	A label permanently attached to the vehicle describing the vehicle's loading capacity, the original equipment tire sizes and the recommended cold tire inflation pressures.

Tire Loading And Tire Pressure

Tire And Loading Information Placard Location

NOTE: The proper cold tire inflation pressure is listed on the driver's side B-Pillar or the rear edge of the driver's side door.

Check the inflation pressure of each tire, including the spare tire (if equipped), at least monthly and inflate to the recommended pressure for your vehicle.

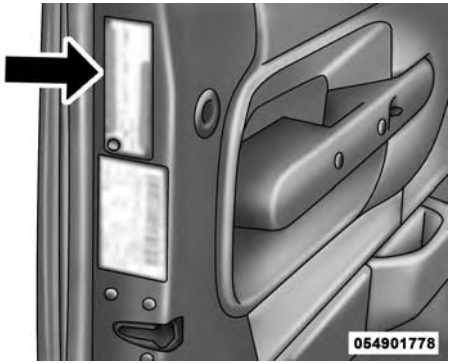

Example Tire Placard Location (Door)

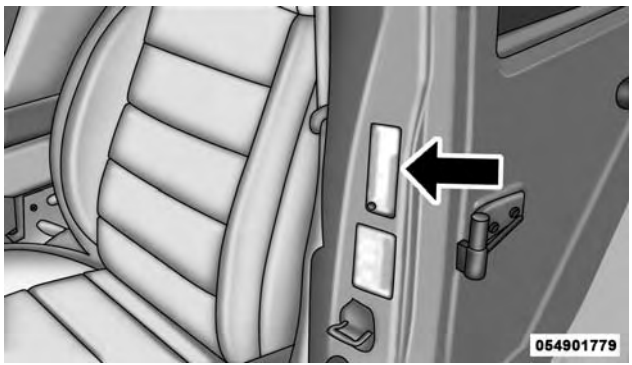

Example Tire Placard Location (B-Pillar)

WARNING!

- **Overloading of your tires is dangerous. Overloading can cause tire failure, affect vehicle handling, and increase your stopping distance. Use tires of the recommended load capacity for your vehicle. Never overload them.**
- **Improperly inflated tires are dangerous and can cause collisions. Under-inflation increases tire flexing and can result in over-heating and tire failure. Over-inflation reduces a tire's ability to cushion shock. Objects on the road and chuck holes can cause damage that results in tire failure. Unequal tire pressures can cause steering problems. You could lose control of your vehicle. Over-inflated or under-inflated tires can affect vehicle handling and can fail suddenly, resulting in loss of vehicle control. Always drive with each tire inflated to the recommended cold tire inflation pressure.**

Tire And Loading Information Placard

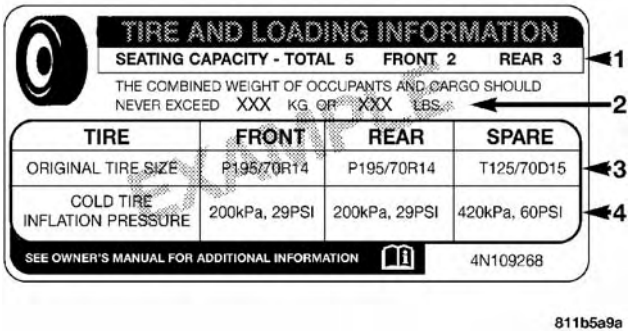

Tire And Loading Information Placard

This placard tells you important information about the:

1. Number of people that can be carried in the vehicle.
2. Total weight your vehicle can carry.
3. Tire size designed for your vehicle.
4. Cold tire inflation pressures for the front, rear, and spare tires.

Loading

The vehicle maximum load on the tire must not exceed the load carrying capacity of the tire on your vehicle. You will not exceed the tire's load carrying capacity if you adhere to the loading conditions, tire size, and cold tire inflation pressures specified on the Tire and Loading Information placard in "Vehicle Loading" in "Starting And Operating", or the Tire Information Supplement, located in your Owner's Information kit.

NOTE: Under a maximum loaded vehicle condition, gross axle weight ratings (GAWRs) for the front and rear axles must not be exceeded. Refer to "Vehicle Loading" in "Starting And Operating", or the Tire Information Supplement located in your Owner's Information kit, for further information on GAWRs, vehicle loading, and trailer towing.

To determine the maximum loading conditions of your vehicle, locate the statement "The combined weight of occupants and cargo should never exceed XXX kg or XXX lbs" on the Tire and Loading Information placard. The combined weight of occupants, cargo/luggage and trailer tongue weight (if applicable) should never exceed the weight referenced here.

Steps For Determining Correct Load Limit—

(1) Locate the statement "The combined weight of occupants and cargo should never exceed XXX kg or XXX lbs." on your vehicle's placard.

(2) Determine the combined weight of the driver and passengers that will be riding in your vehicle.

(3) Subtract the combined weight of the driver and passengers from XXX kg or XXX lbs.

(4) The resulting figure equals the available amount of cargo and luggage load capacity. For example, if "XXX" amount equals 1400 lbs. and there will be five 150 lb passengers in your vehicle, the amount of available cargo and luggage load capacity is 650 lbs. (1400-750 (5x150) = 650 lbs.)

(5) Determine the combined weight of luggage and cargo being loaded on the vehicle. That weight may not safely exceed the available cargo and luggage load capacity calculated in Step 4.

(6) If your vehicle will be towing a trailer, load from your trailer will be transferred to your vehicle. Consult this manual to determine how this reduces the available cargo and luggage load capacity of your vehicle.

Metric Example For Load Limit

For example, if "XXX" amount equals 635 kg, and there will be five 68 kg passengers in your vehicle, the amount of available cargo and luggage load capacity is 295 kg (635-340 (5x68) = 295 kg) as shown in step 4.

NOTE:

- If your vehicle will be towing a trailer, load from your trailer will be transferred to your vehicle. The following table shows examples on how to calculate total load, cargo/luggage, and towing capacities of your vehicle with varying seating configurations and number and size of occupants. This table is for illustration purposes only and may not be accurate for the seating and load carry capacity of your vehicle.
- For the following example, the combined weight of occupants and cargo should never exceed 865 lbs (392 kg).

Occupants			Combined weight of occupants and cargo from Tire Placard	MINUS	Combined Occupant's weight	=	AVAILABLE Cargo/Luggage and Trailer Tongue Weight
TOTAL	FRONT	REAR					
EXAMPLE 1							
5	2	3	865 lbs	minus	Occupant 1: 200 lbs Occupant 2: 130 lbs Occupant 3: 160 lbs Occupant 4: 100 lbs Occupant 5: 80 lbs TOTAL WEIGHT: 670 lbs 670 lbs	=	195 lbs
EXAMPLE 2							
3	2	1	865 lbs	minus	Occupant 1: 210 lbs Occupant 2: 180 lbs Occupant 3: 150 lbs TOTAL WEIGHT: 540 lbs 540 lbs	=	325 lbs
EXAMPLE 3							
2	2	0	865 lbs	minus	Occupant 1: 200 lbs Occupant 2: 200 lbs TOTAL WEIGHT: 400 lbs 400 lbs	=	465 lbs

EXAMPLE

S11a4d11

WARNING!

Overloading of your tires is dangerous. Overloading can cause tire failure, affect vehicle handling, and increase your stopping distance. Use tires of the recommended load capacity for your vehicle. Never overload them.

TIRES — GENERAL INFORMATION

Tire Pressure

Proper tire inflation pressure is essential to the safe and satisfactory operation of your vehicle. Four primary areas are affected by improper tire pressure:

- Safety and Vehicle Stability
- Economy
- Tread Wear
- Ride Comfort

Safety

WARNING!

- **Improperly inflated tires are dangerous and can cause collisions.**
- **Underinflation increases tire flexing and can result in overheating and tire failure.**
- **Overinflation reduces a tire's ability to cushion shock. Objects on the road and chuckholes can cause damage that result in tire failure.**

(Continued)

WARNING! ***(Continued)***

- **Overinflated or underinflated tires can affect vehicle handling and can fail suddenly, resulting in loss of vehicle control.**
- **Unequal tire pressures can cause steering problems. You could lose control of your vehicle.**
- **Unequal tire pressures from one side of the vehicle to the other can cause the vehicle to drift to the right or left.**
- **Always drive with each tire inflated to the recommended cold tire inflation pressure.**

Both under-inflation and over-inflation affect the stability of the vehicle and can produce a feeling of sluggish response or over responsiveness in the steering.

NOTE:

- Unequal tire pressures from side to side may cause erratic and unpredictable steering response.
- Unequal tire pressure from side to side may cause the vehicle to drift left or right.

Fuel Economy

Underinflated tires will increase tire rolling resistance resulting in higher fuel consumption.

Tread Wear

Improper cold tire inflation pressures can cause abnormal wear patterns and reduced tread life, resulting in the need for earlier tire replacement.

Ride Comfort And Vehicle Stability

Proper tire inflation contributes to a comfortable ride. Over-inflation produces a jarring and uncomfortable ride.

Tire Inflation Pressures

The proper cold tire inflation pressure is listed on the driver's side B-Pillar or rear edge of the driver's side door.

At least once a month:

- Check and adjust tire pressure with a good quality pocket-type pressure gauge. Do not make a visual judgement when determining proper inflation. Tires may look properly inflated even when they are under-inflated.
- Inspect tires for signs of tire wear or visible damage.

CAUTION!

After inspecting or adjusting the tire pressure, always reinstall the valve stem cap. This will prevent moisture and dirt from entering the valve stem, which could damage the valve stem.

Inflation pressures specified on the placard are always "cold tire inflation pressure". Cold tire inflation pressure is defined as the tire pressure after the vehicle has not been driven for at least three hours, or driven less than 1 mile (1.6 km) after sitting for a minimum of three hours. The cold tire inflation pressure must not exceed the maximum inflation pressure molded into the tire sidewall.

Check tire pressures more often if subject to a wide range of outdoor temperatures, as tire pressures vary with temperature changes.

Tire pressures change by approximately 1 psi (7 kPa) per 12°F (7°C) of air temperature change. Keep this in mind when checking tire pressure inside a garage, especially in the Winter.

Example: If garage temperature = 68°F (20°C) and the outside temperature = 32°F (0°C) then the cold tire inflation pressure should be increased by 3 psi (21 kPa), which equals 1 psi (7 kPa) for every 12°F (7°C) for this outside temperature condition.

Tire pressure may increase from 2 to 6 psi (13 to 40 kPa) during operation. DO NOT reduce this normal pressure build up or your tire pressure will be too low.

Tire Pressures For High Speed Operation

The manufacturer advocates driving at safe speeds and within posted speed limits. Where speed limits or conditions are such that the vehicle can be driven at high speeds, maintaining correct tire inflation pressure is very important. Increased tire pressure and reduced vehicle loading may be required for high-speed vehicle operation. Refer to your authorized tire dealer or original equipment vehicle dealer for recommended safe operating speeds, loading and cold tire inflation pressures.

WARNING!

High speed driving with your vehicle under maximum load is dangerous. The added strain on your tires could cause them to fail. You could have a serious collision. Do not drive a vehicle loaded to the maximum capacity at continuous speeds above 75 mph (120 km/h).

Radial Ply Tires

WARNING!

Combining radial ply tires with other types of tires on your vehicle will cause your vehicle to handle poorly. The instability could cause a collision. Always use radial ply tires in sets of four. Never combine them with other types of tires.

Tire Repair

If your tire becomes damaged, it may be repaired if it meets the following criteria:

- The tire has not been driven on when flat.
- The damage is only on the tread section of your tire (sidewall damage is not repairable).
- The puncture is no greater than a ¼ of an inch (6 mm).

Consult an authorized tire dealer for tire repairs and additional information.

Damaged Run Flat tires, or Run Flat tires that have experienced a loss of pressure should be replaced immediately with another Run Flat tire of identical size and service description (Load Index and Speed Symbol).

Tire Types

All Season Tires — If Equipped

All season tires provide traction for all seasons (Spring, Summer, Fall and Winter). Traction levels may vary between different all season tires. All season tires can be identified by the M+S, M&S, M/S or MS designation on the tire sidewall. Use all season tires only in sets of four; failure to do so may adversely affect the safety and handling of your vehicle.

Summer Or Three Season Tires — If Equipped

Summer tires provide traction in both wet and dry conditions, and are not intended to be driven in snow or on ice. If your vehicle is equipped with Summer tires, be aware these tires are not designed for Winter or cold driving conditions. Install Winter tires on your vehicle when ambient temperatures are less than 40°F (5°C) or if roads are covered with ice or snow. For more information, contact an authorized dealer.

Summer tires do not contain the all season designation or mountain/snowflake symbol on the tire sidewall. Use Summer tires only in sets of four; failure to do so may adversely affect the safety and handling of your vehicle.

WARNING!

Do not use Summer tires in snow/ice conditions. You could lose vehicle control, resulting in severe injury or death. Driving too fast for conditions also creates the possibility of loss of vehicle control.

Snow Tires

Some areas of the country require the use of snow tires during the Winter. Snow tires can be identified by a "mountain/snowflake" symbol on the tire sidewall.

If you need snow tires, select tires equivalent in size and type to the original equipment tires. Use snow tires only in sets of four; failure to do so may adversely affect the safety and handling of your vehicle.

Snow tires generally have lower speed ratings than what was originally equipped with your vehicle and should not be operated at sustained speeds over 75 mph (120 km/h). For speeds above 75 mph (120 km/h), refer to original equipment or an authorized tire dealer for recommended safe operating speeds, loading and cold tire inflation pressures.

While studded tires improve performance on ice, skid and traction capability on wet or dry surfaces may be poorer than that of non-studded tires. Some states prohibit studded tires; therefore, local laws should be checked before using these tire types.

Run Flat Tires — If Equipped

Run Flat tires allow you the capability to drive 50 miles (80 km) at 50 mph (80 km/h) after a rapid loss of inflation pressure. This rapid loss of inflation is referred to as the Run Flat mode. A Run Flat mode occurs when the tire inflation pressure is of/or below 14 psi (96 kPa). Once a Run Flat tire reaches the Run Flat mode, it has limited driving capabilities and needs to be replaced immediately. A Run Flat tire is not repairable.

It is not recommended to drive a vehicle loaded at full capacity, or to tow a trailer while a tire is in the Run Flat mode.

See the tire pressure monitoring section for more information.

Spare Tires — If Equipped

NOTE: For vehicles equipped with Tire Service Kit instead of a spare tire, please refer to "Tire Service Kit" in "In Case Of Emergency" for further information.

CAUTION!

Because of the reduced ground clearance, do not take your vehicle through an automatic car wash with a compact or limited use temporary spare installed. Damage to the vehicle may result.

Tire Spinning

When stuck in mud, sand, snow, or ice conditions, do not spin your vehicle's wheels above 30 mph (48 km/h) or for longer than 30 seconds continuously without stopping.

Refer to "Freeing A Stuck Vehicle" in "In Case Of Emergency" for further information.

WARNING!

Fast spinning tires can be dangerous. Forces generated by excessive wheel speeds may cause tire damage or failure. A tire could explode and injure someone. Do not spin your vehicle's wheels faster than 30 mph (48 km/h) for more than 30 seconds continuously when you are stuck, and do not let anyone near a spinning wheel, no matter what the speed.

Tread Wear Indicators

Tread wear indicators are in the original equipment tires to help you in determining when your tires should be replaced.

055007576

Tire Tread

1 — Worn Tire
2 — New Tire

These indicators are molded into the bottom of the tread grooves. They will appear as bands when the tread depth becomes a 1/16 of an inch (1.6 mm). When the

tread is worn to the tread wear indicators, the tire should be replaced. Refer to "Replacement Tires" in this section for further information.

Life Of Tire

The service life of a tire is dependent upon varying factors including, but not limited to:

- Driving style.
- Tire pressure – Improper cold tire inflation pressures can cause uneven wear patterns to develop across the tire tread. These abnormal wear patterns will reduce tread life, resulting in the need for earlier tire replacement.
- Distance driven.
- Performance tires, tires with a speed rating of V or higher, and Summer tires typically have a reduced tread life. Rotation of these tires per the vehicle maintenance schedule is highly recommended.

WARNING!

Tires and the spare tire should be replaced after six years, regardless of the remaining tread. Failure to

(Continued)

WARNING! ***(Continued)***

follow this warning can result in sudden tire failure. You could lose control and have a collision resulting in serious injury or death.

Keep dismounted tires in a cool, dry place with as little exposure to light as possible. Protect tires from contact with oil, grease, and gasoline.

Replacement Tires

The tires on your new vehicle provide a balance of many characteristics. They should be inspected regularly for wear and correct cold tire inflation pressures. The manufacturer strongly recommends that you use tires equivalent to the originals in size, quality and performance when replacement is needed. Refer to the paragraph on "Tread Wear Indicator" in this section. Refer to the Tire and Loading Information placard or the Vehicle Certification Label for the size designation of your tire. The Load Index and Speed Symbol for your tire will be found on the original equipment tire sidewall.

See the Tire Sizing Chart example found in the "Tire Safety Information" section of this manual for more information relating to the Load Index and Speed Symbol of a tire.

It is recommended to replace the two front tires or two rear tires as a pair. Replacing just one tire can seriously affect your vehicle's handling. If you ever replace a wheel, make sure that the wheel's specifications match those of the original wheels.

It is recommended you contact your authorized tire dealer or original equipment dealer with any questions you may have on tire specifications or capability. Failure to use equivalent replacement tires may adversely affect the safety, handling, and ride of your vehicle.

WARNING!

- **Do not use a tire, wheel size or rating other than that specified for your vehicle. Some combinations of unapproved tires and wheels may change suspension dimensions and performance characteristics, resulting in changes to steering, handling, and braking of your vehicle. This can cause**

(Continued)

WARNING! ***(Continued)***

unpredictable handling and stress to steering and suspension components. You could lose control and have a collision resulting in serious injury or death. Use only the tire and wheel sizes with load ratings approved for your vehicle.

- **Never use a tire with a smaller load index or capacity, other than what was originally equipped on your vehicle. Using a tire with a smaller load index could result in tire overloading and failure. You could lose control and have a collision.**
- **Failure to equip your vehicle with tires having adequate speed capability can result in sudden tire failure and loss of vehicle control.**

CAUTION!

Replacing original tires with tires of a different size may result in false speedometer and odometer readings.

TIRE CHAINS (TRACTION DEVICES)

Use of traction devices require sufficient tire-to-body clearance. Follow these recommendations to guard against damage.

- Traction device must be of proper size for the tire, as recommended by the traction device manufacturer.
- Install on Front Tires Only.
- Only 215/60 R16 and 215/55 R17 tire sizes can be chained using 9 mm tire chains.
- No other tire sizes can be chained.

WARNING!

Using tires of different size and type (M+S, Snow) between front and rear axles can cause unpredictable handling. You could lose control and have a collision.

CAUTION!

To avoid damage to your vehicle or tires, observe the following precautions:

- **Because of restricted traction device clearance between tires and other suspension components, it is important that only traction devices in good condition are used. Broken devices can cause serious damage. Stop the vehicle immediately if noise occurs that could indicate device breakage. Remove the damaged parts of the device before further use.**
- **Install device as tightly as possible and then retighten after driving about ½ mile (0.8 km).**
- **Do not exceed 30 mph (48 km/h).**
- **Drive cautiously and avoid severe turns and large bumps, especially with a loaded vehicle.**
- **Do not drive for a prolonged period on dry pavement.**
- **Observe the traction device manufacturer's instructions on the method of installation, operating speed, and conditions for use. Always use the suggested operating speed of the device manufacturer's if it is less than 30 mph (48 km/h).**
- **Do not use traction devices on a compact spare tire.**

DEPARTMENT OF TRANSPORTATION UNIFORM TIRE QUALITY GRADES

The following tire grading categories were established by the National Highway Traffic Safety Administration. The specific grade rating assigned by the tire's manufacturer in each category is shown on the sidewall of the tires on your vehicle.

All passenger vehicle tires must conform to Federal safety requirements in addition to these grades.

Treadwear

The Treadwear grade is a comparative rating, based on the wear rate of the tire when tested under controlled conditions on a specified government test course. For example, a tire graded 150 would wear one and one-half times as well on the government course as a tire graded 100. The relative performance of tires depends upon the actual conditions of their use, however, and may depart significantly from the norm due to variations in driving habits, service practices, and differences in road characteristics and climate.

Traction Grades

The Traction grades, from highest to lowest, are AA, A, B, and C. These grades represent the tire's ability to stop on wet pavement, as measured under controlled conditions on specified government test surfaces of asphalt and concrete. A tire marked C may have poor traction performance.

WARNING!

The traction grade assigned to this tire is based on straight-ahead braking traction tests, and does not include acceleration, cornering, hydroplaning, or peak traction characteristics.

Temperature Grades

The temperature grades are A (the highest), B, and C, representing the tire's resistance to the generation of heat and its ability to dissipate heat, when tested under controlled conditions on a specified indoor laboratory test wheel. Sustained high temperature can cause the material of the tire to degenerate and reduce tire life, and excessive temperature can lead to sudden tire failure. The grade C corresponds to a level of performance, which all passenger vehicle

tires must meet under the Federal Motor Vehicle Safety Standard No. 109. Grades B and A represent higher levels of performance on the laboratory test wheel, than the minimum required by law.

WARNING!

The temperature grade for this tire is established for a tire that is properly inflated and not overloaded. Excessive speed, under-inflation, or excessive loading, either separately or in combination, can cause heat buildup and possible tire failure.

TIRE ROTATION RECOMMENDATIONS

The tires on the front and rear of your vehicle operate at different loads and perform different steering, handling, and braking functions. For these reasons, they wear at unequal rates.

These effects can be reduced by timely rotation of tires. The benefits of rotation are especially worthwhile with aggressive tread designs such as those on On/Off Road type tires. Rotation will increase tread life, help to maintain mud, snow, and wet traction levels, and contribute to a smooth, quiet ride.

Refer to the "Maintenance Plan" in this section for the proper maintenance intervals. The reasons for any rapid or unusual wear should be corrected prior to rotation being performed.

The suggested Front Wheel Drive (FWD) rotation method is the "forward cross" shown in the following diagram. This rotation pattern does not apply to some directional tires that must not be reversed.

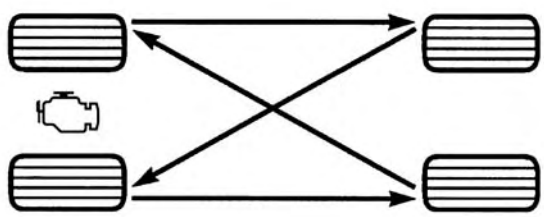

055707139

Front Wheel Drive (FWD) Tire Rotation

The suggested Four Wheel Drive (4WD) Tire rotation method is the "rearward cross" shown in the following diagram.

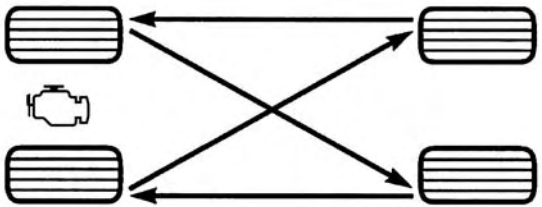

Four Wheel Drive (4WD) Tire Rotation

CAUTION!

Proper operation of four-wheel drive vehicles depends on tires of equal size, type and circumference on each wheel. Any difference in tire size can cause damage to the power transfer unit. Tire rotation schedule should be followed to balance tire wear.

STORING THE VEHICLE

If the vehicle should remain stationary for more than a month, observe the following precautions:

- Park your vehicle in a covered, dry and possibly airy location the windows open slightly.
- Check that the Electric Park Brake is not engaged.
- Disconnect the negative (-) terminal from the battery post and be sure that the battery is fully charged. During storage check battery charge quarterly.
- If you do not disconnect the battery from the electrical system, check the battery charge every thirty days.
- Clean and protect the painted parts by applying protective waxes.
- Clean and protect polished metal parts by applying protective waxes.
- Apply talcum powder to the front and rear wiper blades and leave raised from the glass.
- Cover the vehicle with an appropriate cover taking care not to damage the painted surface by dragging

across dirty surfaces. Do not use plastic sheeting which will not allow the evaporation of moisture present on the surface of the vehicle.

- Inflate the tires at a pressure of +7.25 psi (+0.5 bar) higher than recommended on the tire placard and check it periodically.
- Do not drain the engine cooling system.
- Whenever you leave the vehicle is stationary for two weeks or more, idle the engine for approximately five minutes with the air conditioning system on and high fan speed. This will ensure a proper lubrication of the system, thus minimizing the possibility of damage to the compressor when the vehicle is put back into operation.

NOTE: When the vehicle has not been started or driven for at least 30 days, an Extended Park Start Procedure is required to start the vehicle. Refer to "Starting The Engine" in "Starting And Operating" for further information.

CAUTION!

Before removal of the positive and negative terminals to the battery, wait at least a minute with ignition switch in the OFF position and close the drivers door. When reconnecting the positive and negative terminals to the battery be sure the ignition switch is in the OFF position and the drivers door is closed.

TECHNICAL DATA

CONTENTS

- VEHICLE IDENTIFICATION NUMBER 404
- WHEEL AND TIRE TORQUE SPECIFICATIONS 404
  - Torque Specifications 405
- FLUID CAPACITIES 407
- FLUIDS, LUBRICANTS, AND GENUINE PARTS 408
  - Engine 408
  - Chassis 409

VEHICLE IDENTIFICATION NUMBER

The chassis number (VIN) and stamped on the plate illustrated in, located on the left front corner of the instrument panel cover, visible from the outside vehicle through the windshield.

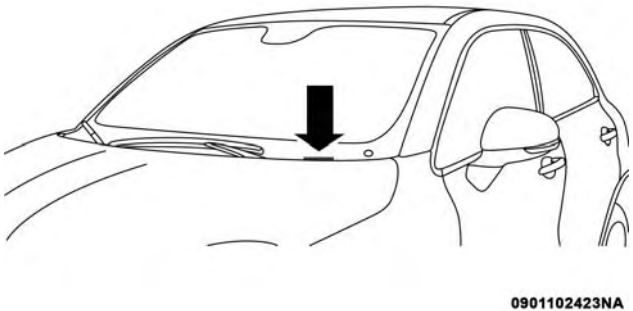

Vehicle Identification Number (VIN)

This number is also stamped on the floor of the passenger compartment, in front of the right front seat.

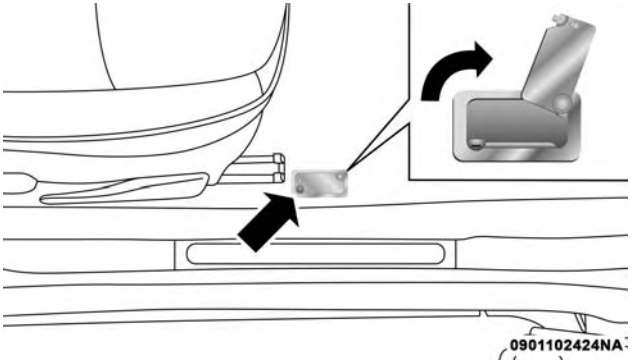

Vehicle Identification Number (VIN)

The stamp includes:

- Type of the vehicle
- Sequential production number of the chassis

WHEEL AND TIRE TORQUE SPECIFICATIONS

Proper lug nut/bolt torque is very important to ensure that the wheel is properly mounted to the vehicle. Any time a wheel has been removed and reinstalled on the vehicle, the lug nuts/bolts should be torqued using a properly calibrated torque wrench.

Torque Specifications

Lug Nut/Bolt Torque	**Lug Nut/ Bolt Size	Lug Nut/ Bolt Socket Size
89 Ft-Lbs (120 N·m)	M12 x 1.25 x 25.5	17 mm

**Use only your authorized dealer recommended lug nuts/bolts and clean or remove any dirt or oil before tightening.

Inspect the wheel mounting surface prior to mounting the tire and remove any corrosion or loose particles.

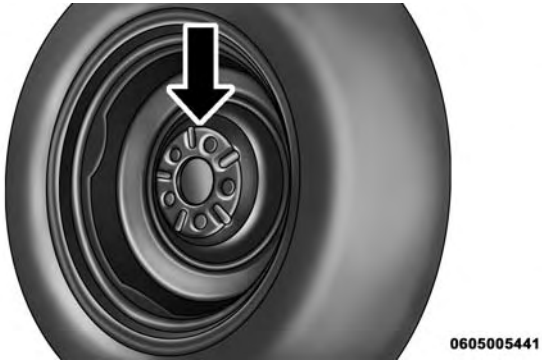

Wheel Mounting Surface

Tighten the lug nuts/bolts in a star pattern until each nut/bolt has been tightened twice.

0605006372

Torque Patterns

After 25 miles (40 km) check the lug nut/bolt torque to be sure that all the lug nuts/bolts are properly seated against the wheel.

WARNING!

To avoid the risk of forcing the vehicle off the jack, do not tighten the lug nuts fully until the vehicle has been lowered. Failure to follow this warning may result in personal injury.

FLUID CAPACITIES

	U.S	Metric
Fuel (Approximate)		
1.4L Turbo/2.4L Engine	12.7 Gallons	48 Liters
Engine Oil With Filter		
1.4L Turbo Engine (SAE 5W-40 Synthetic, API Certified)	4.0 Quarts	3.8 Liters
2.4L Engine (SAE 0W-20, API Certified)	5.5 Quarts	5.2 Liters
Cooling System *		
1.4L Turbo Engine (Mopar Antifreeze/Engine Coolant 10 Year/150,000 Mile Formula)	5.5 Quarts	5.2 Liters
2.4L Engine (Mopar Antifreeze/Engine Coolant 10 Year/ 150,000 Mile Formula)	6.8 Quarts	6.5 Liters
* Includes heater and coolant recovery bottle filled to MAX level.		

FLUIDS, LUBRICANTS, AND GENUINE PARTS

Engine

Component	Fluid, Lubricant, or Genuine Part
Engine Coolant	We recommend you use Mopar Antifreeze/Coolant 10 Year/ 150,000 Mile Formula OAT (Organic Additive Technology) or equivalent meeting the requirements of FCA Material Standard MS.90032.
Engine Oil – 1.4L Turbo Engine	We recommend you use SAE 5W-40 API Certified Synthetic Engine Oil, meeting the requirements of FCA Material Standard MS-12991. Refer to your engine oil filler cap for correct SAE grade.
Engine Oil – 2.4L Engine	We recommend you use SAE 0W-20 API Certified Engine Oil, meeting the requirements of FCA Material Standard MS-6395. Refer to your engine oil filler cap for correct SAE grade.
Engine Oil Filter	We recommend you use a Mopar Engine Oil Filter.
Spark Plugs	We recommend you use Mopar Spark Plugs.
Fuel Selection – 1.4L Turbo Engine	91 Octane Recommended, 87 Acceptable, 0-15% Ethanol.
Fuel Selection – 2.4L Engine	87 Octane, 0-15% Ethanol.

Chassis

Component	Fluid, Lubricant, or Genuine Part
Manual Transmission – If Equipped	We recommend you use Mopar C Series Manual & Dual Dry Clutch Transmission Fluid.
Automatic Transmission – If Equipped	Use only Mopar ZF 8&9 Speed ATF Automatic Transmission Fluid, or equivalent. Failure to use the correct fluid may affect the function or performance of your transmission.
Power Transfer Unit (PTU) – If Equipped	We recommended you use Mopar Front Axle/PTU Synthetic Axle Lubricant SAE 75W-90 (API GL-5).
Rear Differential (RDM) – If Equipped	We recommended you use Mopar Rear Axle/RDM Synthetic Axle Lubricant SAE 75W-90 (API GL-5).
Brake Master Cylinder	We recommend you use Mopar DOT 4. If DOT 4 brake fluid is not available, then DOT 3 is acceptable. DOT 4 brake fluid must be changed every 2 years regardless of mileage.

MULTIMEDIA

CONTENTS

- CYBERSECURITY 412
- UCONNECT SETTINGS 413
  - Buttons On The Faceplate 415
  - Buttons On The Touchscreen 415
  - Customer Programmable Features — Uconnect 5.0 Settings 415
  - Customer Programmable Features — Uconnect 6.5 NAV Settings 430
- UCONNECT RADIOS 445
- USB/MEDIA PLAYER CONTROL — IF EQUIPPED 445
- STEERING WHEEL AUDIO CONTROLS 446
  - Radio Operation 447
  - Media Mode 447
- RADIO OPERATION AND MOBILE DEVICES . .447
  - Regulatory And Safety Information 447
- VOICE RECOGNITION QUICK TIPS 449
  - Introducing Uconnect 449
  - Get Started 450
  - Basic Voice Commands 451
  - Radio 451
  - Media 452
  - Phone 453
  - Voice Text Reply 454
  - Navigation (6.5 NAV) 455
  - Siri Eyes Free — If Equipped 456
  - General Information 458
  - Additional Information 458

CYBERSECURITY

Your vehicle may be a connected vehicle and may be equipped with both wired and wireless networks. These networks allow your vehicle to send and receive information. This information allows systems and features in your vehicle to function properly.

Your vehicle may be equipped with certain security features to reduce the risk of unauthorized and unlawful access to vehicle systems and wireless communications. Vehicle software technology continues to evolve over time and FCA US LLC, working with its suppliers, evaluates and takes appropriate steps as needed. Similar to a computer or other devices, your vehicle may require software updates to improve the usability and performance of your systems or to reduce the potential risk of unauthorized and unlawful access to your vehicle systems.

The risk of unauthorized and unlawful access to your vehicle systems may still exist, even if the most recent version of vehicle software (such as Uconnect software) is installed.

WARNING!

- **It is not possible to know or to predict all of the possible outcomes if your vehicle's systems are breached. It may be possible that vehicle systems, including safety related systems, could be impaired or a loss of vehicle control could occur that may result in an accident involving serious injury or death.**
- **ONLY insert media (e.g., USB, SD card, or CD) into your vehicle if it came from a trusted source. Media of unknown origin could possibly contain malicious software, and if installed in your vehicle, it may increase the possibility for vehicle systems to be breached.**
- **As always, if you experience unusual vehicle behavior, take your vehicle to your nearest authorized dealer immediately.**

NOTE:

- FCA or your dealer may contact you directly regarding software updates.
- To help further improve vehicle security and minimize the potential risk of a security breach, vehicle owners should:
  - Routinely check www.driveuconnect.com/software-update to learn about available Uconnect software updates.
  - Only connect and use trusted media devices (e.g. personal mobile phones, USBs, CDs).

Privacy of any wireless and wired communications cannot be assured. Third parties may unlawfully intercept information and private communications without your consent. For further information, refer to "On-board Diagnostic System (OBD II) Cybersecurity" in "Getting To Know Your Instrument Panel".

UCONNECT SETTINGS

The Uconnect system uses a combination of buttons on the touchscreen and buttons on the faceplate located on the center of the instrument panel that allow you to access and change the customer programmable features. Many features can vary by vehicle.

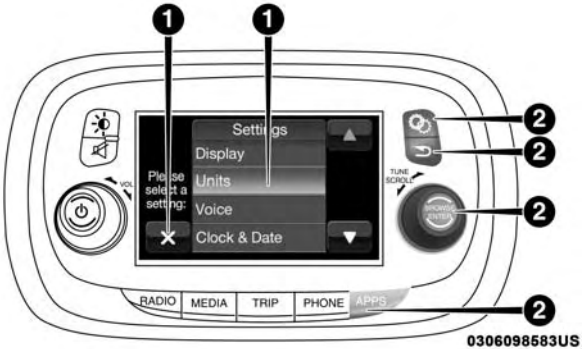

Uconnect 5.0 Buttons On The Touchscreen And Buttons On The Faceplate

1 — Uconnect Buttons On The Touchscreen
2 — Uconnect Buttons On The Faceplate

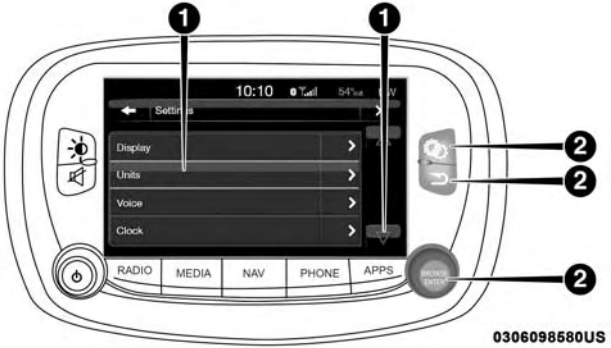

Uconnect 6.5 NAV Buttons On The Touchscreen And Buttons On The Faceplate

1 — Uconnect Buttons On The Touchscreen
2 — Uconnect Buttons On The Faceplate

Buttons On The Faceplate

Buttons on the faceplate are located below, and beside the Uconnect system in the center of the instrument panel. In addition, there is a Scroll/Enter control knob located on the right side. Turn the control knob to scroll through menus and change settings (i.e., 30, 60, 90), push the center of the control knob one or more times to select or change a setting (i.e., ON, OFF).

Your Uconnect system may also have Display Off and back arrow buttons on the faceplate.

Push the Display Off button on the faceplate to turn off the Uconnect screen. Push the Display Off button on the faceplate a second time to turn the screen on.

Push the Back Arrow button on the faceplate to exit out of a Menu or certain option on the Uconnect system.

Buttons On The Touchscreen

Buttons on the touchscreen are accessible on the Uconnect touchscreen.

Customer Programmable Features — Uconnect 5.0 Settings

Push the Settings button on the faceplate, to display the settings menu screen. In this mode the Uconnect system allows you to access programmable features that may be equipped such as Display, Units, Voice, Clock & Date, Safety/Assistance, Lights, Doors & Locks, Engine Off Options, Audio, Phone/Bluetooth, Radio Setup, Restore Settings and Clear Personal Data.

NOTE: Only one touchscreen area may be selected at a time.

When making a selection, press the button on the touchscreen to enter the desired mode. Once in the desired mode, press and release the preferred setting and make your selection. Once the setting is complete, either press the Back Arrow button on the touchscreen or the Back button on the faceplate to return to the previous menu or press the “X” button on the touchscreen to close out of the settings screen. Pressing the Up or Down Arrow buttons on the right side of the screen will allow you to toggle up or down through the available settings.

NOTE: All settings should be changed with the ignition in the “RUN” position.

Display

After pressing the “Display” button on the touchscreen, the following settings will be available:

Setting Name	Selectable Options		
Display Mode	Auto	Manual	
Brightness	+	–	
Language	English	Español	Français
Touchscreen Beep	☐	☑	

Units

After pressing the “Units” button on the touchscreen, you may select each unit of measure independently displayed in the instrument cluster display. The following selectable units of measure are listed below:

Setting Name	Selectable Options	
US	☐	☑
Metric	☐	☑

After pressing the “Custom” button with “Units” on the touchscreen, you may select from the following menu items:

Setting Name	Selectable Options			
Distance	mi	km		
Fuel Consumption	MPG (US)	MPG (UK)	L/100 km	km/L
Pressure	psi	kPa	bar	
Temperature	°C		°F	

Voice

After pressing the “Voice” button on the touchscreen, the following settings will be available:

Setting Name	Selectable Options		
Voice Response Length	Brief	Detailed	
Show Command List	Always	With Help	Never

Clock & Date

After pressing the “Clock & Date” button on the touch-screen, the following settings will be available:

Setting Name	Selectable Options	
Set Time & Format	12 hour	24 hour
NOTE: Press the corresponding arrow above and below the current time to adjust, then select “AM” or “PM.”		
Show Time Status	On	Off
Set Date	Up Arrow Button	Down Arrow Button
Sync Time — If Equipped	On	Off
NOTE: When in this display, you may sync the time with GPS.		

Safety/Assistance

After pressing the "Safety/Assistance" button on the touchscreen, the following settings will be available:

Setting Name	Selectable Options	
ParkView Backup Camera Delay — If Equipped	☐	☑
NOTE: When the vehicle is shifted out of REVERSE (with camera delay turned off), the rear camera mode is exited and the navigation or audio screen appears again. When the vehicle is shifted out of REVERSE (with camera delay turned on), the rear view image with dynamic grid lines will be displayed for up to 10 seconds after shifting out of "REVERSE" unless the forward vehicle speed exceeds 8 mph (13 km/h), the transmission is shifted into PARK or the ignition is switched to the off position.		
ParkView Backup Camera Active Guide Lines — If Equipped	☐	☑
NOTE: When this feature is enabled, active (dynamic) grid lines are overlaid on the Rear Backup Camera image to illustrate the width of the vehicle and its projected back up path based on the steering wheel position. A dashed center line overlay indicates the center of the vehicle to assist with parking or aligning to a hitch/receiver.		
ParkView Backup Camera Fixed Guide Lines — If Equipped	☐	☑

Setting Name	Selectable Options	
NOTE: When this feature is enabled, fixed (static) grid lines are overlaid on the Rear Backup Camera image to illustrate the width of the vehicle.		
Forward Collision Warning-Plus (FCW+) — If Equipped	Near	Far
NOTE: The Front Collision Warning (FCW+) feature can be set to Far, or set to Near. The default status of FCW+ is the Far setting. This means the system will warn you of a possible collision with the vehicle in front of you when you are farther away. This gives you the most reaction time.		
Forward Collision Warning-Plus (FCW+) Active Braking — If Equipped	☐	☑
NOTE: The FCW+ system includes Advanced Brake Assist (ABA). When this feature is selected, it will apply the brakes to slow your vehicle in case of potential forward collision. The ABA applies additional brake pressure when the driver requests insufficient brake pressure to avoid a potential frontal collision. The ABA system becomes active at 5 mph (8 km/h).		
ParkSense — If Equipped	Sound Only	Sound and Display
NOTE: The ParkSense system will scan for objects behind the vehicle when the transmission gear selector is in REVERSE and the vehicle speed is less than 11 mph (18 km/h). It will provide an alert (audible and/or visual) to indicate the proximity to other objects.		

Setting Name	Selectable Options		
Front ParkSense Volume — If Equipped	Low	Medium	High
Rear ParkSense Volume — If Equipped	Low	Medium	High
Rear ParkSense Braking Assist — If Equipped	☐	☑	
NOTE: When this feature is selected, the park assist system will detect objects located behind the vehicle and utilize autonomous braking to stop the vehicle.			
LaneSense Warning — If Equipped	Early	Medium	Late
NOTE: When this feature is selected, it sets the distance at which the steering wheel will provide feedback for potential lane departures.			
LaneSense Strength — If Equipped	Low	Medium	High
NOTE: When this feature is selected, it sets the strength of the steering wheel feedback for potential lane departures.			

Setting Name	Selectable Options		
Blind Spot Alert — If Equipped	Off	Lights	Lights & Chime

NOTE:
- When this feature is selected, the Blind Spot Alert feature can be set to Off, Lights or Lights and Chime. The Blind Spot Alert feature can be activated in Lights mode. When this mode is selected, the Blind Spot Monitor (BSM) system is activated and will only show a visual alert in the outside mirrors. When Lights & Chime mode is activated, the Blind Spot Monitor (BSM) will show a visual alert in the outside mirrors as well as an audible alert when the turn signal is on. When Off is selected, the Blind Spot Monitor (BSM) system is deactivated.
- If your vehicle has experienced any damage in the area where the sensor is located, even if the fascia is not damaged, the sensor may have become misaligned. Take your vehicle to an authorized dealer to verify sensor alignment. A sensor that is misaligned will result in the BSM not operating to specification.

Setting Name	Selectable Options	
Rain Sensing Wipers — If Equipped	☐	☑

NOTE: When this feature is selected, the system will automatically activate the windshield wipers if it senses moisture on the windshield.

Lights

After pressing the "Lights" button on the touchscreen, the following settings will be available:

Setting Name	Selectable Options			
Headlight Sensitivity	1	2	3	
NOTE: The greater the sensitivity set, the less the external light variation required to turn on the lights (e.g. with a setting on level 3 at sunset the headlights turn on earlier than in levels 1 and 2). • Level 1 = minimum sensitivity • Level 2 = medium sensitivity • Level 3 = maximum sensitivity				
Headlight Off Delay	0	30	60	90
Greeting Lights	On		Off	
Auto High Beams — If Equipped	On		Off	
Daytime Running Lights	Yes		No	

Setting Name	Selectable Options	
Cornering Lights	On	Off
Flash Lights With Lock — If Equipped	On	Off

Doors & Locks

After pressing the "Doors & Locks" button on the touchscreen, the following settings will be available:

Setting Name	Selectable Options		
Auto Door Locks	On	Off	
NOTE: When this feature is selected, all doors will lock automatically when the vehicle reaches a speed of 12 mph (20 km/h).			
Auto Unlock On Exit	On	Off	
Flash Lights With Lock	On	Off	
Horn With Lock	Off	1st Press	2nd Press
Horn With Remote Start — If Equipped	On	Off	

Setting Name	Selectable Options	
Passive Entry	On	Off
Remote Door Unlock/ Door Unlock	Driver	All
NOTE: When "Driver" is selected, only the driver's door will unlock on the first push of the key fob unlock button, you must push the key fob unlock button twice to unlock the passenger's doors. When "All" is selected, all of the doors will unlock on the first press of the key fob unlock button.		

Engine Off Options

After pressing the "Engine Off Options" button on the touchscreen, the following settings will be available:

Setting Name	Selectable Options	
Headlight Off Delay	+	–
NOTE: When this feature is selected, the driver can choose to have the headlights remain on for 0, 30, 60, or 90 seconds when exiting the vehicle.		
Radio Off Delay	0 MIN	20 MIN

Audio

After pressing the "Audio" button on the touchscreen, the following settings will be available:

Setting Name	Selectable Options		
Equalizer	+		–
NOTE: Bass/Mid/Treble allow you to simply slide your finger up or down to change the setting as well as press directly on the desired setting.			
Balance/Fade	When in this display you may adjust the Balance and Fade settings.		
Speed Adjusted Volume	1	2	3
Surround Sound — If Equipped	On		Off
Loudness — If Equipped	Yes		No
AUX Volume Off-set — If Equipped	On		Off
Auto-On Radio	On	Off	Recall Last
NOTE: The Radio automatically turns on when vehicle is in run or will recall whether it was on or off at last ignition off.			

Phone/Bluetooth

After pressing the "Phone/Bluetooth" button on the touchscreen, the following settings will be available:

Setting Name	Selectable Options
Paired Phones	This feature shows which phones are paired to the Phone/Bluetooth system. For further information, refer to the Uconnect Owner's Manual Supplement

SiriusXM Setup — If Equipped

After pressing the "SiriusXM Setup" button on the touchscreen, the following settings will be available:

Setting Name	Selectable Options	
SXM Tune Start	☐	☑
NOTE: The "Tune Start" feature begins playing the current song from the beginning when you tune to a music channel using one of the twelve presets, so you can enjoy the complete song. This feature occurs the first time the preset is selected during that current song. Tune Start works in the background, so you will not even realize it's on, except that you will miss the experience of joining your favorite song with only a few seconds left to play.		

Setting Name	Selectable Options
Channel Skip	Channel Skip
NOTE: SiriusXM can be programmed to designate a group of channels that are the most desirable to listen to or to exclude undesirable channels while scanning. To make your selection, press the “Channel Skip” button on the touchscreen, select the channels you would like to skip.	
Subscription Information	Subscription Info
NOTE: New vehicle purchasers or lessees will receive a free limited time subscription to SiriusXM Satellite Radio with your radio. Following the expiration of the free services, it will be necessary to access the information on the Subscription Information screen to re-subscribe. 1. Press the “Subscription Info” button on the touchscreen to access the Subscription Information screen. 2. Write down the SIRIUS ID numbers for your receiver. To reactivate your service, either call the number listed on the screen or visit the provider online.	

NOTE: SiriusXM Travel Link is a separate subscription and is available for U.S. residents only.

Restore Settings

After pressing the "Restore Settings" button on the touchscreen, the following settings will be available:

Setting Name	Selectable Options		
Restore Settings	Ok	Cancel	X

NOTE:
When this feature is selected, it will reset all settings to their default settings. To restore the settings to their default setting, press the "Restore Settings" button on the touchscreen. A pop-up will appear asking "Are you sure you want to reset your settings to default?"

Clear Personal Data

After pressing the "Clear Personal Data" button on the touchscreen, the following settings will be available:

Setting Name	Selectable Options		
Clear Personal Data	OK	Cancel	X

NOTE:
When this feature is selected, it will remove all personal data including Bluetooth devices and presets. To remove personal information, press the "Clear Personal Data" button and a pop-up will appear asking "Are you sure you want to clear all personal data?"

Customer Programmable Features — Uconnect 6.5 NAV Settings

Press the Settings button to display the menu setting screen. In this mode the Uconnect system allows you to access programmable features that may be equipped such as Display, Clock, Safety & Driving Assistance, Lights, Doors & Locks, Engine Off Options, Audio, Phone/Bluetooth, SiriusXM Setup, Restore Settings Defaults, Clear Personal Data and System Information.

NOTE:

- Only one touchscreen area may be selected at a time.
- Depending on the vehicles options, feature settings may vary.

When making a selection, press the button on the touchscreen to enter the desired mode. Once in the desired mode, press and release the preferred setting and make your selection. Once the setting is complete, either press the Back Arrow button on the touchscreen to return to the previous menu, or press the “X” button on the touchscreen to close out of the settings screen. Pressing the Up or Down Arrow button on the right side of the screen will allow you to toggle up or down through the available settings.

Display

After pressing the “Display” button on the touchscreen, the following settings will be available:

Setting Name	Selectable Options	
Display Mode	Auto	Manual
NOTE: When Day or Night is selected for the Display Mode, the usage of the Parade Mode feature will cause the radio to activate the Display Brightness Day control even though the headlights are on.		
Display Brightness With Head-lights ON	+	–
Display Brightness With Head-lights OFF	+	–
Set Language	English/Español/Français	
Touchscreen Beep	On	Off

Units

After pressing the "Units" button on the touchscreen, you may select each unit of measure independently displayed in the instrument cluster display. The following selectable units of measure are listed below:

Setting Name	Selectable Options	
US	☐	☑
Metric	☐	☑
NOTE: When US is selected, Distance is set on miles, Fuel Consumption is set on MPG (US), Pressure is set on psi, and Temperature is set on °F. When Metric is selected, Distance is set on km, Fuel Consumption is set on L/100 km, Pressure is set on bar, and Temperature is set on °C.		

After pressing the "Custom" button with "Units" on the touchscreen, you may select from the following menu items:

Setting Name	Selectable Options			
Distance	mi	km		
Fuel Consumption	MPG (US)	MPG (UK)	L/100 km	km/L
Pressure	psi	kPa	bar	
Temperature	°C		°F	

Voice

After pressing the "Voice" button on the touchscreen, the following settings will be available:

Setting Name	Selectable Options		
Voice Response Length	Brief	Detailed	
Show Command List	Always	With Help	Never

Clock

After pressing the "Clock" button on the touchscreen, the following settings will be available:

Setting Name	Selectable Options	
Show Time In Status Bar	On	Off
Sync Time With GPS	On	Off
Set Day	+	–
Set Month	+	–
Set Year	+	–
Set Hours	+	–
Set Minutes	+	–
Time Format	12 hrs	24 hrs

Safety & Driving Assistance

After pressing the "Safety & Driving Assistance" button on the touchscreen, the following settings will be available:

Setting Name	Selectable Options		
Forward Collision Warning-Plus (FCW+) — If Equipped	Near	Medium	Far
NOTE: The Front Collision Warning (FCW+) feature can be set to Far, Medium, or Near. The default status of FCW+ is the Far setting. This means the system will warn you of a possible collision with the vehicle in front of you when you are farther away. This gives you the most reaction time. To change the setting for a more dynamic driving experience, select the Near setting. This warns you of a possible collision when you are much closer to the vehicle in front of you.			
Forward Collision Warning-Plus (FCW+) Active Braking — If Equipped	Off	Audio	Audio & Brake
NOTE: The FCW+ system includes Advanced Brake Assist (ABA). When this feature is selected, it will apply the brakes to slow your vehicle in case of potential forward collision. The ABA applies additional brake pressure when the driver requests insufficient brake pressure to avoid a potential frontal collision. The ABA system becomes active at 5 mph (8 km/h).			

Setting Name	Selectable Options		
LaneSense Warning — If Equipped	Early	Med	Late
NOTE: When this feature is selected, it sets the distance at which the steering wheel will provide feedback for potential lane departures.			
LaneSense Strength — If Equipped	Low	Medium	High
NOTE: When this feature is selected, it sets the strength of the steering wheel feedback for potential lane departures.			
ParkSense — If Equipped	Sound Only	Sound & Display	
NOTE: The ParkSense system will scan for objects behind the vehicle when the transmission gear selector is in REVERSE and the vehicle speed is less than 11 mph (18 km/h). It will provide an alert (audible and/or visual) to indicate the proximity to other objects.			
Front ParkSense Volume — If Equipped	Low	Medium	High
Blind Spot Alert — If Equipped	Off	Lights	Lights & Chimes

Setting Name	Selectable Options	
NOTE: • When this feature is selected, the Blind Spot Alert feature can be set to Off, Lights or Lights and Chime. The Blind Spot Alert feature can be activated in Lights mode. When this mode is selected, the Blind Spot Monitor (BSM) system is activated and will only show a visual alert in the outside mirrors. When Lights & Chime mode is activated, the Blind Spot Monitor (BSM) will show a visual alert in the outside mirrors as well as an audible alert when the turn signal is on. When Off is selected, the Blind Spot Monitor (BSM) system is deactivated. • If your vehicle has experienced any damage in the area where the sensor is located, even if the fascia is not damaged, the sensor may have become misaligned. Take your vehicle to an authorized dealer to verify sensor alignment. A sensor that is misaligned will result in the BSM not operating to specification.		
ParkView Backup Camera Active Guidelines — If Equipped	On	Off
NOTE: Your vehicle may be equipped with the ParkView Rear Back Up Camera Active Guidelines that allows you to see active guidelines over the ParkView Back up camera display whenever the gear selector is put into REVERSE. The image will be displayed on the radio touchscreen display along with a caution note to “check entire surroundings” across the top of the screen. After five seconds, this note will disappear.		

Setting Name	Selectable Options	
ParkView Backup Camera Delay	On	Off
NOTE: When the vehicle is shifted out of REVERSE (with camera delay turned off), the rear camera mode is exited and the navigation or audio screen appears again. When the vehicle is shifted out of REVERSE (with camera delay turned on), the rear view image will be displayed for up to 10 seconds after shifting out of "REVERSE" unless the forward vehicle speed exceeds 8 mph (12 km/h), the transmission is shifted into PARK or the ignition is switched to the off position.		
Rain Sensing Auto Wipers	On	Off
NOTE: When this feature is selected, the system will automatically activate the windshield wipers if it senses moisture on the windshield.		
Electric Park Brake Service Mode	This feature provides a means for a technician or vehicle owner to utilize a vehicle integrated, menu driven system, to command the electric park brake retraction, to service the rear foundation brakes (brake pads, calipers, rotors, etc.).	

Lights

After pressing the "Lights" button on the touchscreen, the following settings will be available.

Setting Name	Selectable Options			
Headlight Sensitivity	1	2	3	
NOTE: The greater the sensitivity set, the less the external light variation required to turn on the lights (e.g. with a setting on level 3 at sunset the headlights turn on earlier than in levels 1 and 2). • Level 1 = minimum sensitivity • Level 2 = medium sensitivity • Level 3 = maximum sensitivity				
Headlight Off Delay	0	30	60	90
Greeting Lights	On		Off	
Auto High Beams — If Equipped	On		Off	
Daytime Running Lights	Yes		No	
Cornering Lights	On		Off	

Setting Name	Selectable Options	
Flash Lights With Lock — If Equipped	On	Off
Headlights With Wipers — If Equipped	On	Off

Doors & Locks

After pressing the "Doors & Locks" button on the touchscreen, the following settings will be available:

Setting Name	Selectable Options	
Auto Door Lock	Yes	No
NOTE: When this feature is selected, all doors will lock automatically when the vehicle reaches a speed of 15 mph (24 km/h).		
Auto Unlock On Exit	Yes	No
Flash Lights With Lock	Yes	No
Sound Horn With Remote Lock	On	Off

Setting Name	Selectable Options	
Remote Door Unlock	All	Driver
NOTE: This feature will allow you to program your remote door locks to open "All" or only the "Driver" with the first push of the key fob or grabbing the Passive Entry door handle.		
Passive Entry	On	Off
NOTE: This feature allows you to lock and unlock the vehicles door(s) without having to press the key fob lock or unlock buttons.		
Memory Linked To Key Fob — If Equipped	On	Off
NOTE: • This feature provides automatic driver seat positioning to enhance driver mobility when entering and exiting the vehicle. • The seat will return to the memorized seat location (if Recall Memory with Remote Key Unlock is set to On) when the key fob is used to unlock the door.		
Sound Horn With Start — If Equipped	On	Off
NOTE: When this feature is selected, the horn will sound when the Remote Start is activated.		

Engine Off Options

After pressing the "Engine Off Options" button on the touchscreen, the following settings will be available:

Setting Name	Selectable Options	
Radio Off Delay	0 MIN	20 MIN
Headlight Off Delay — If Equipped	+	–
NOTE: When this feature is selected, the driver can choose to have the headlights remain on for 0, 30, 60, or 90 seconds when exiting the vehicle.		

Audio

After pressing the "Audio" button on the touchscreen, the following settings will be available:

Setting Name	Selectable Options	
Balance/Fade	When in this display you may adjust the Balance and Fade settings.	
Equalizer	+	–
NOTE: Bass/Mid/Treble allow you to simply slide your finger up or down to change the setting as well as press directly on the desired setting.		

Setting Name	Selectable Options		
Speed Adjusted Volume	1	2	3
Surround Sound — If Equipped	On		Off
Loudness — If Equipped	Yes		No
AUX Volume Off-set — If Equipped	On		Off
Auto-On Radio	On	Off	Recall Last
NOTE: The Radio automatically turns on when vehicle is in run or will recall whether it was on or off at last ignition off.			

Phone/Bluetooth

After pressing the "Phone/Bluetooth" button on the touchscreen, the following settings will be available:

Setting Name	Selectable Options
Paired Phones	This feature shows which mobile phones are paired to the Phone/ Bluetooth system.
Paired Audio Sources	This feature shows which audio devices are paired to the Phone/ Bluetooth system.

SiriusXM Setup — If Equipped

After pressing the "SiriusXM Setup" button on the touchscreen, the following settings will be available:

Setting Name	Selectable Options	
SXM Tune Start	☐	☑
NOTE: The "Tune Start" feature begins playing the current song from the beginning when you tune to a music channel using one of the twelve presets, so you can enjoy the complete song. This feature occurs the first time the preset is selected during that current song. Tune Start works in the background, so you will not even realize it's on, except that you will miss the experience of joining your favorite song with only a few seconds left to play.		
Channel Skip	Channel Skip	
NOTE: SiriusXM can be programmed to designate a group of channels that are the most desirable to listen to or to exclude undesirable channels while scanning. To make your selection, press the "Channel Skip" button on the touchscreen, select the channels you would like to skip.		

Setting Name	Selectable Options
Subscription Information	Subscription Info

NOTE:
New vehicle purchasers or lessees will receive a free limited time subscription to SiriusXM Satellite Radio with your radio. Following the expiration of the free services, it will be necessary to access the information on the Subscription Information screen to re-subscribe.

1. Press the "Subscription Info" button on the touchscreen to access the Subscription Information screen.
2. Write down the SIRIUS ID numbers for your receiver. To reactivate your service, either call the number listed on the screen or visit the provider online.

NOTE: SiriusXM Travel Link is a separate subscription and is available for U.S. residents only.

Restore Settings Defaults

After pressing the "Restore Settings Defaults" button on the touchscreen, the following settings will be available:

Setting Name	Selectable Options
Restore Settings	When this feature is selected, it will reset Display, Clock, Audio, and Radio Settings to their default. Once in the desired mode, press and release the preferred setting and make your selection.

Clear Personal Data

After pressing the "Clear Personal Data Settings" button on the touchscreen, the following settings will be available:

Setting Name	Selectable Options	
Clear Personal Data	Yes	No
NOTE: When this feature is selected, it will remove personal data including Bluetooth devices and presets.		

UCONNECT RADIOS

For detailed information about your Uconnect radio, refer to your Uconnect Owner's Manual Supplement.

USB/MEDIA PLAYER CONTROL — IF EQUIPPED

This feature allows an external device to be plugged into the USB port or AUX Jack.

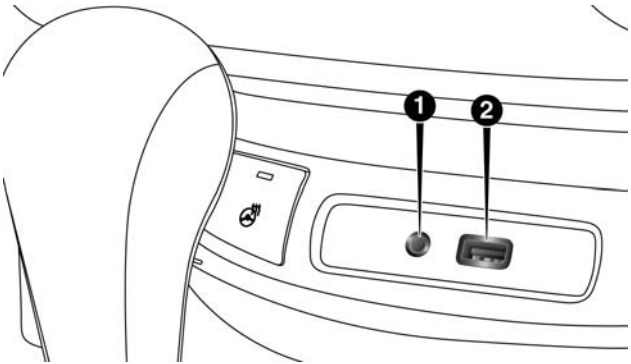

Front USB Port And AUX Jack

1 — AUX/ Jack
2 — USB Port

Located below the heating ventilation and air conditioning controls is the front USB port and AUX jack.

Refer to the Uconnect Owner's Manual Supplement for external USB support capability.

Center Console USB Port

Located in the center console is a second USB port.

NOTE: Depending on vehicle configuration, the USB port may be charge only, or media file capable.

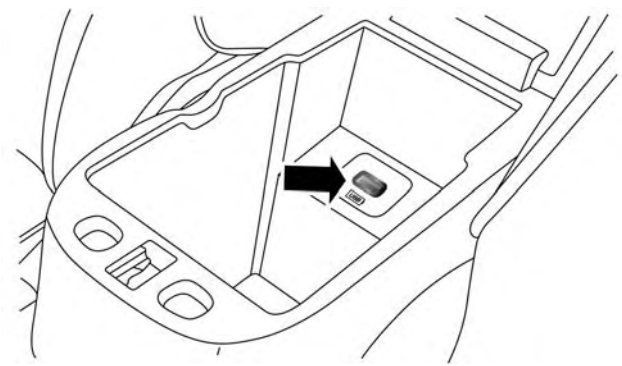

Center Console USB (Charge Only) Port — If Equipped

STEERING WHEEL AUDIO CONTROLS

The remote sound system controls are located at the rear of the steering wheel. Reach behind the wheel to access the switches.

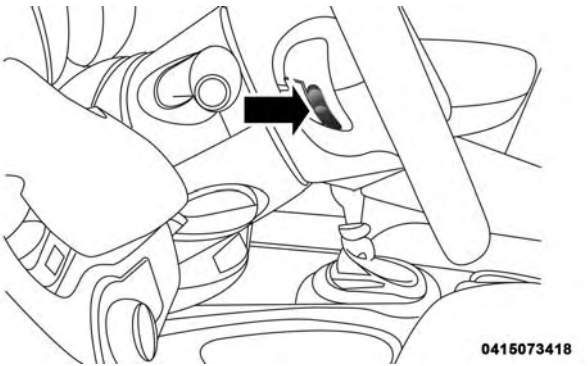

Remote Sound System Controls (Back View Of Steering Wheel)

The right-hand control is a rocker-type switch with a pushbutton in the center and controls the volume and mode of the sound system. Pushing the top of the rocker switch will increase the volume, and pushing the bottom of the rocker switch will decrease the volume.

Pushing the center button will make the radio switch between the various modes available (AM/FM/SAT/

AUX/Media Player, etc.) and can also be used to select/enter an item while scrolling through menu.

The left-hand control is a rocker-type switch with a pushbutton in the center. The function of the left-hand control is different depending on which mode you are in.

The following describes the left-hand control operation in each mode.

Radio Operation

Pushing the top of the switch will "Seek" up for the next listenable station and pushing the bottom of the switch will "Seek" down for the next listenable station.

The button located in the center of the left-hand control will tune to the next preset station that you have programmed in the radio preset button.

Media Mode

Pushing the top of the switch once will go to the next track on the selected media (USB, Bluetooth). Pushing the bottom of the switch once will go to the beginning of the current track, or to the beginning of the previous track if it is within eight seconds after the current track begins to play.

If you push the switch up or down twice, it plays the second track; three times, it will play the third, etc.

RADIO OPERATION AND MOBILE DEVICES

Under certain conditions, an "on" mobile device in your vehicle can cause erratic or noisy performance from your radio. This condition may be lessened or eliminated by relocating the mobile device antenna. This condition is not harmful to the radio. If your radio performance does not satisfactorily "clear" by the repositioning of the antenna, it is recommended that the radio volume be turned down or off during mobile device operation when not using Uconnect (if equipped).

Regulatory And Safety Information

USA/CANADA

Exposure to Radio Frequency Radiation

The radiated output power of the internal wireless radio is far below the FCC radio frequency exposure limits. Nevertheless, the wireless radio will be used in such a manner that the radio is 8 inches (20 centimeters) or further from the human body.

The internal wireless radio operates within guidelines found in radio frequency safety standards and recommendations, which reflect the consensus of the scientific community.

The radio manufacturer believes the internal wireless radio is safe for use by consumers. The level of energy emitted is far less than the electromagnetic energy emitted by wireless devices such as mobile phones. However, the use of wireless radios may be restricted in some situations or environments, such as aboard airplanes. If you are unsure of restrictions, you are encouraged to ask for authorization before turning on the wireless radio.

This device complies with Part 15 of the FCC Rules and with Industry Canada license-exempt RSS standard(s). Operation is subject to the following two conditions:

1. This device may not cause harmful interference.
2. This device must accept any interference received, including interference that may cause undesired operation.

NOTE:

- This equipment has been tested and found to comply with the limits for a Class B digital device, pursuant to Part 15 of the FCC Rules. These limits are designed to provide reasonable protection against harmful interference in a residential installation. This equipment generates, uses and can radiate radio frequency energy and, if not installed and used in accordance with the instructions, may cause harmful interference to radio communications. However, there is no guarantee that interference will not occur in a particular installation.
- If this equipment does cause harmful interference to radio or television reception, which can be determined by turning the equipment off and on, the user is encouraged to try to correct the interference by one or more of the following measures:
- Increase the separation between the equipment and receiver.
- Consult the dealer or an experienced radio technician for help.

VOICE RECOGNITION QUICK TIPS

Introducing Uconnect

Start using Uconnect Voice Recognition with these helpful quick tips. It provides the key Voice Commands and tips you need to know to control your Uconnect 5.0 or 6.5 NAV system.

Uconnect 5.0

Key Features:

- Five-inch Color Touchscreen Display with AM/FM/USB/Bluetooth
- Bluetooth with integrated voice control

Uconnect 6.5 NAV

Key Features:

- 6.5-inch Color Touchscreen Display with AM/FM/USB/SD Card/Bluetooth
- Bluetooth with integrated voice control
- GPS navigation (if equipped)

Get Started

All you need to control your Uconnect system with your voice are the buttons on your steering wheel.

1. Visit **UconnectPhone.com to check mobile device and feature compatibility and to find phone pairing instructions.**
2. Reduce background noise. Wind and passenger conversations are examples of noise that may impact recognition.
3. Speak clearly at a normal pace and volume while facing straight ahead. The microphone is positioned on the rearview mirror and aimed at the driver.
4. Each time you give a Voice Command, you must first push either the VR or Phone button, wait until **after** the beep, then say your Voice Command.
5. You can interrupt the help message or system prompts by pushing the VR or Phone button and saying a Voice Command from current category.

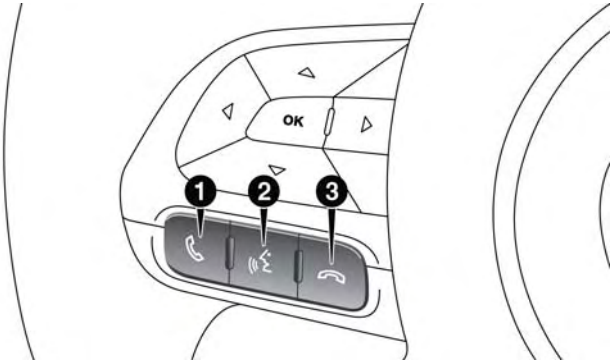

Uconnect Voice Command Buttons

1 — Push To Initiate Or To Answer A Phone Call, Send Or Receive A Text
2 — Push To Begin Radio, Navigation, Or Media Functions
3 — Push To End Call

Basic Voice Commands

The basic Voice Commands below can be given at any point while using your Uconnect system.

Push the VR button . After the beep, say...

- **Cancel** to stop a current voice session.
- **Help** to hear a list of suggested Voice Commands.
- **Repeat** to listen to the system prompts again.

Notice the visual cues that inform you of your voice recognition system's status. Cues appear on the touch-screen.

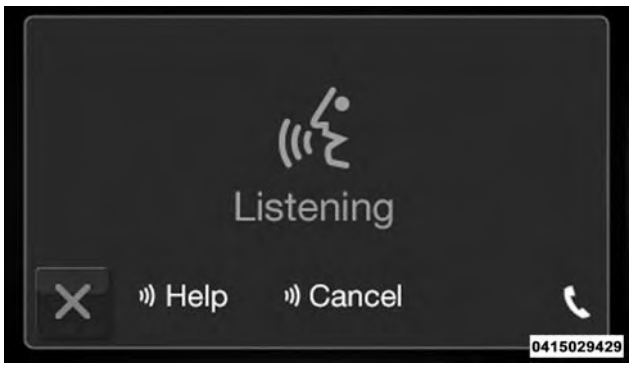

Uconnect 5.0

Uconnect 6.5 NAV

Radio

Use your voice to quickly get to the AM, FM or SiriusXM Satellite Radio stations you would like to hear. (Subscription or included SiriusXM Satellite Radio trial required.)

Push the VR button . After the beep, say...

- **Tune to** ninety-five-point-five FM.
- **Tune to** Satellite Channel Hits 1.

TIP: At any time, if you are not sure of what to say or want to learn a Voice Command, press the VR button and say **"Help."** The system will provide you with a list of commands.

Uconnect 5.0 Radio

Uconnect 6.5A NAV Radio

Media

Uconnect offers connections via USB Port, Bluetooth and Auxiliary Ports (If Equipped). Voice operation is only available for connected USB and iPod devices.

Push the VR button . After the beep, say one of the following commands and follow the prompts to switch your media source or choose an artist.

- **Change source** to Bluetooth.
- **Change source** to iPod.
- **Change source** to USB.

- **Play artist** Beethoven; **Play album** Greatest Hits; **Play song** Moonlight Sonata; **Play genre** Classical.

TIP: Press the Browse button on the touchscreen to see all of the music on your iPod or USB device. Your Voice Command must match **exactly** how the artist, album, song and genre information is displayed.

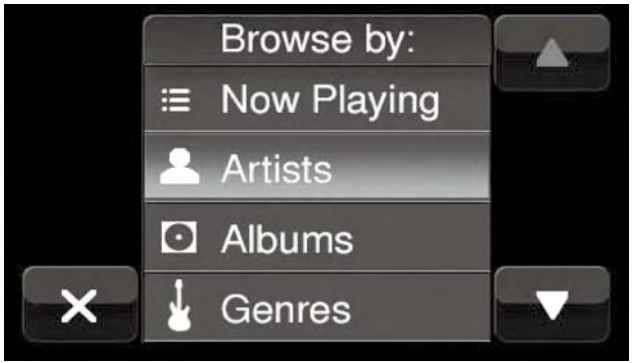

Uconnect 5.0 Media

Uconnect 6.5 NAV Media

Phone

Making and answering hands-free phone calls is easy with Uconnect. When the Phonebook button is illuminated on your touchscreen, your system is ready. Check UconnectPhone.com for mobile phone compatibility and pairing instructions.

Push the Phone button . After the beep, say one of the following commands...

- **Call** John Smith.
- **Dial** 123-456-7890 and follow the system prompts.
- **Redial** (call previous outgoing phone number).

- **Call back** (call previous incoming phone number).

TIP: When providing a Voice Command, push the Phone button and say **"Call,"** then pronounce the name **exactly** as it appears in your phone book. When a contact has multiple phone numbers, you can say **"Call** John Smith **work."**

Uconnect 5.0 Phone

Uconnect 6.5 NAV Phone

Voice Text Reply

Uconnect will announce **incoming** text messages. Push the Phone button and say **"Listen."** (Must have compatible mobile phone paired to Uconnect system.)

1. Once an incoming text message is read to you, push the Phone button . After the beep, say: **"Reply."**
2. Listen to the Uconnect prompts. After the beep, repeat one of the pre-defined messages and follow the system prompts.

PRE-DEFINED VOICE TEXT REPLY RESPONSES

Yes.	Stuck in traffic.	See you later.
No.	Start without me.	I'll be late.
Okay.	Where are you?	I will be <number> minutes late.
Call me.	Are you there yet?	
I'll call you later.	I need directions.	See you in <number> of minutes.
I'm on my way.	Can't talk right now.	
I'm lost.		Thanks.

TIP: Your mobile phone must have the full implementation of the **Message Access Profile (MAP)** to take advantage of this feature. For details about MAP, visit UconnectPhone.com. Apple iPhone iOS6 or later supports reading **incoming** text messages only.

Navigation (6.5 NAV)

The Uconnect navigation feature helps you save time and become more productive when you know exactly how to get to where you want to go.

1. To enter a destination, push the VR button . After the beep, say:
   - For the 6.5 NAV Uconnect System, say: **"Navigate to** 800 Chrysler Drive Auburn Hills, Michigan."
2. Then follow the system prompts.

TIP: To start a POI search, push the VR button . After the beep, say: " **Find nearest** coffee shop."

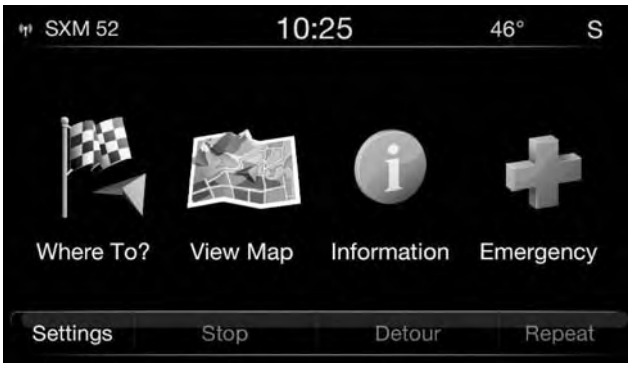

Uconnect 6.5 NAV Navigation

Siri Eyes Free — If Equipped

Siri lets you use your voice to send text messages, select media, place phone calls and much more. Siri uses your natural language to understand what you mean and will respond back to confirm your requests. The system is designed to keep your eyes on the road and your hands on the wheel by letting Siri help you perform useful tasks.

To enable Siri push and hold, then release the Uconnect Voice Recognition (VR) button on the steering wheel. After you hear a double beep you can ask Siri to play podcasts and music, get directions, read text messages and many other useful requests.

Getting Started

Ensure Siri is enabled On Your iPhone.

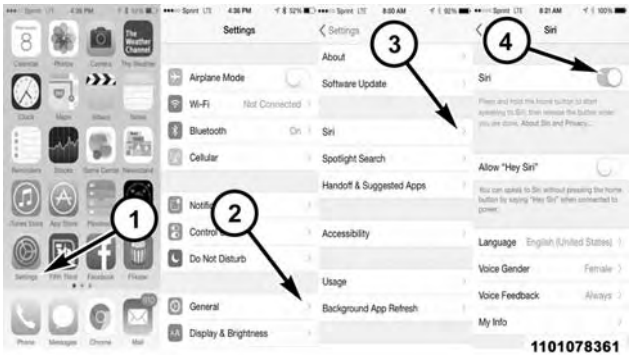

1 — Select Settings On Your iPhone
2 — Select General
3 — Select Siri
4 — Enable Siri

1. Pair your Siri enabled device to the vehicles sound system.

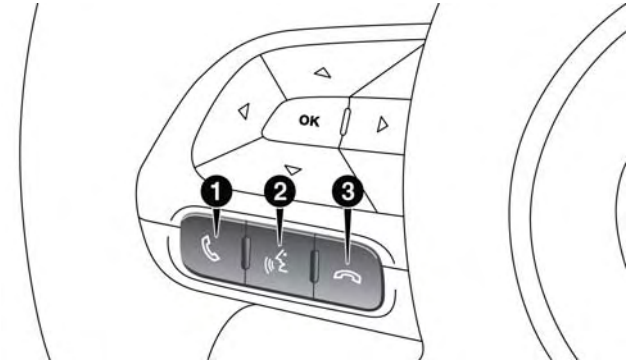

Uconnect Voice Command Buttons

1 — Phone Pick Up Button
2 — Voice Recognition/Siri Eyes Free Button
3 — Phone Hang Up Button

NOTE: A **push and release** of the button will start normal embedded VR functions. The **push and hold, then release** of the button will start Siri functions.

2. After the double beep, begin speaking to Siri.

Examples of Siri commands and questions:

- "Play Rolling Stones"
- "Send text message to John"
- "Read text message from Sarah"
- "Take me to the nearest coffee shop"

NOTE:

- Speak clearly at a normal pace and volume while facing straight ahead to ensure your command is understood.
- Siri is available on iPhone 4S and later.

General Information

This device complies with FCC rules Part 15 and Industry Canada RSS-210. Operation is subject to the following two conditions:

1. This device may not cause harmful interference.
2. This device must accept any interference that may be received including interference that may cause undesired operation.

NOTE:

- The transmitter has been tested and it complies with FCC and IC rules. Changes or modifications not expressly approved by the party responsible for compliance could void the user's authority to operate the device.
- The term IC before the certification/registration number only signifies that Industry Canada technical specifications were met.

Additional Information

© 2016 FCA US LLC. All rights reserved. Mopar and Uconnect are registered trademarks and Mopar Owner Connect is a trademark of FCA US LLC. Android is a trademark of Google Inc. SiriusXM and all related marks and logos are trademarks of SiriusXM Radio Inc.

Uconnect System Support:

- U.S. residents call 1-877-855-8400 (24 hours a day 7 days a week) or visit DriveUconnect.com
- Canadian residents call 1-800-465-2001 (English) or 1-800-387-9983 (French) or visit DriveUconnect.ca
- Mon. – Fri., 8:00 am – 8:00 pm, ET
- Sat., 9:00 am – 5:00 pm, ET
- Sun., Closed

INDEX

About Your Brakes 154
Adding Engine Coolant (Antifreeze) 366
Adding Fuel 265
Adding Washer Fluid 362
Additives, Fuel 264
Air Bag 176
  Advance Front Air Bag 176
  Air Bag Operation 178
  Enhanced Accident Response 340
  Event Data Recorder (EDR) 340
  Front Air Bag 176
  If A Deployment Occurs 184
  Knee Impact Bolsters 179
  Maintaining Your Air Bag System 187
  Redundant Air Bag Warning Light 176
  Side Air Bags 179
  Transporting Pets 205
Air Bag Light 132, 207
Air Bag Maintenance 187
Air Cleaner, Engine (Engine Air Cleaner Filter) . . .357
Air Conditioner Maintenance 358
Air Conditioning Filter 96, 359
Air Conditioning, Operating Tips 95
Air Conditioning Refrigerant 358, 359
Air Conditioning System 94, 358
Air Pressure, Tires 390
Alarm
  Arm The System 34
Alarm (Security Alarm) 139
All Wheel Drive (AWD) 238
Alterations/Modifications, Vehicle 6
Antifreeze (Engine Coolant) 365, 407
  Disposal 367
Anti-Lock Brake System (ABS) 155
Anti-Lock Warning Light 147, 148
Appearance Care 372
Assist, Hill Start 157
Audio Systems (Radio) 445
Automatic Headlights 67
Automatic Temperature Control (ATC) 94
Automatic Transmission 226, 371, 372
  Adding Fluid 372, 409
  Fluid And Filter Changes 372
  Fluid Change 372
  Fluid Level Check 372
  Fluid Type 371, 409
  Special Additives 371
Auxiliary Electrical Outlet (Power Outlet) 112
Auxiliary Power Outlet 112
Axle Fluid 409

Axle Lubrication 409

Battery 135, 358
  Charging System Light 135
Belts, Seat. 207
Blind Spot Monitoring 59
Body Mechanism Lubrication. 360
B-Pillar Location 384
Brake Assist System 157
Brake Fluid 409
Brakes. 154, 368
Brake System 154, 368
  Fluid Check 409
  Master Cylinder 369
  Warning Light 133
Brightness, Interior Lights 74
Bulbs, Light 209

Camera, Rear 255
Capacities, Fluid 407
Caps, Filler
  Oil (Engine) 356
Carbon Monoxide Warning 206, 265
Car Washes 373
Certification Label. 268
Chains, Tire 397
Changing A Flat Tire 315, 379
Chart, Tire Sizing 381
Check Engine Light (Malfunction Indicator Light) .343
Checking Your Vehicle For Safety 205
Checks, Safety 205
Child Restraint 188
Child Restraints
  Booster Seats 192
  Child Restraints 188
  Child Seat Installation 202
  How To Stow An Unused ALR Seat Belt 200
  Infants And Child Restraints 190
  LATCH Positions 195
  Locating The LATCH Anchorages 198
  Lower Anchors And Tethers For Children 195
  Older Children And Child Restraints 191
  Seating Positions 194
Clean Air Gasoline 262
Cleaning
  Wheels 374
  Windshield Wiper Blades 360
Climate Control 80
  Manual 80
Clutch 369

Clutch Fluid 369
Coin Holder 115
Cold Weather Operation 216
Connector
UCI 445
Universal Consumer Interface (UCI) 445
Console 115
Console, Floor. 115
Contract, Service 10
Cooling System. 364
Adding Coolant (Antifreeze) 366
Coolant Capacity 407
Coolant Level 364, 367
Disposal Of Used Coolant 367
Drain, Flush, And Refill 365
Inspection 367
Points To Remember 367, 368
Pressure Cap 367
Selection Of Coolant (Antifreeze) 365, 407, 408
Corrosion Protection 372
Cruise Light. 151, 152
Cupholders 116
Customer Assistance. 8
Customer Programmable Features 415
Daytime Running Lights 68
Dealer Service. 344
Defroster, Rear Window 78
Defroster, Windshield 207
Dimmer Switch, Headlight 69
Disabled Vehicle Towing 334
Disposal
Antifreeze (Engine Coolant) 367
Door Ajar. 136
Door Ajar Light 136
Door Locks
Door Locks 36
Key Fob 36
Remote 36
Remote Keyless Entry 36
Driver’s Seat Back Tilt. 46
Driving
Through Flowing, Rising, Or Shallow Standing Water 271

Electrical Outlet, Auxiliary (Power Outlet). 112
Electric Park Brake 218
Electric Parking Brake 218
Electronic Brake Control System
Anti-Lock Brake System 155

Electronic Roll Mitigation 161
Traction Control System 159
Electronic Speed Control (Cruise Control) 235
Electronic Throttle Control Warning Light 139
Emergency, In Case Of
Hazard Warning Flasher 289
Jacking 315, 379
Jump Starting 327
Overheating 330
Towing 334
Emission Control System Maintenance 343
Engine
Air Cleaner 357
Break-In Recommendations 217
Checking Oil Level 355
Compartment 353
Coolant (Antifreeze) 408
Cooling 364
Exhaust Gas Caution 206, 265
Fails To Start 215
Flooded, Starting 215
Fuel Requirements 261
Jump Starting 327
Oil 355, 407, 408
Oil Filler Cap 356
Oil Filter 357
Oil Selection 356, 407
Overheating 330
Starting 214
Engine Oil Viscosity 356
Engine Oil Viscosity Chart 356
Enhanced Accident Response Feature 340
Ethanol 262
Exhaust Gas Caution 206, 265
Exhaust System 206, 362
Exterior Lighting 66
Exterior Lights 66, 209

Filters
Air Cleaner 357
Air Conditioning 96, 359
Engine Oil 357, 408
Engine Oil Disposal 357
Flashers
Hazard Warning 289
Turn Signal 70, 150, 209
Flooded Engine Starting 215
Floor Console 115
Fluid, Brake 409
Fluid Capacities 407

Fluid Leaks 209
Fluids, Lubricants And Genuine Parts 408
Fog Lights 68
Forward Collision Warning 239
Freeing A Stuck Vehicle 332
Fuel 261
  Adding 265
  Additives 264
  Clean Air 262
  Ethanol 262
  Gasoline 261
  Light 140
  Materials Added 264
  Methanol 262
  Octane Rating 261, 408
  Requirements 261
  Specifications 408
  Tank Capacity 407

Gasoline, Clean Air 262
Gasoline (Fuel) 261
Gasoline, Reformulated 262
Gear Ranges 225
Gear Select Lever Override 331
General Information 246
General Maintenance 354
Glass Cleaning 377
Gross Axle Weight Rating 274
Gross Vehicle Weight Rating 273
GVWR 268

Hazard
  Driving Through Flowing, Rising, Or Shallow Standing Water 271
Hazard Warning Flasher 289
Headlights
  Automatic 67
  Cleaning 377
  Delay 68
  High Beam/Low Beam Select Switch 69
  Lights On Reminder 68
  Switch 66
  Time Delay 68
Head Restraints 53
Head Rests 53
Heated Mirrors 59
High Beam/Low Beam Select (Dimmer) Switch 69
Hill Start Assist 157
Hitches
  Trailer Towing 276

Holder, Coin 115
Holder, Cup 116
Hood Prop 104
Hood Release 104

Ignition
  Key 27
Immobilizer (Sentry Key) 32
Inside Rearview Mirror 57
Instrument Cluster 150
Instrument Panel Cover 377
Instrument Panel Lens Cleaning 378
Interior And Instrument Lights 70
Interior Appearance Care 376
Interior Lights 70
Intermittent Wipers (Delay Wipers) 75
Introduction 4

Jacking Instructions 318
Jack Location 315
Jack Operation 315, 318, 379
Jump Starting 327

Key Fob
  Arm The Alarm 34
  Keyless Entry 38
Key Fob, Remote Keyless Entry 23
Keyless Enter-N-Go
  Enter The Trunk 38
  Key Fob 38
  Lock The Vehicle's Doors 38, 439
  Passive Entry 38
  Passive Entry Programming 38, 439
  Remote Control 38
  Unlock From The Driver's Side 38
  Unlock From The Passenger Side 38
  Unlock Liftgate 439
Keyless Entry System 23
Key, Replacement 26
Keys 27
Key, Sentry (Immobilizer) 32

Lane Change And Turn Signals 70
LaneSense 251
Lap/Shoulder Belts 165
Latches 209
Lead Free Gasoline 261
Leaks, Fluid 209
Life Of Tires 395
Liftgate Window Wiper/Washer 78

Light Bulbs 209
Lights 209
Air Bag 132, 207
Automatic Headlights 67
Brake Warning 133
Cruise 151, 152
Daytime Running 68
Dimmer Switch, Headlight 69
Exterior 209
Fog 68
Hazard Warning Flasher 289
Headlights 66
Headlights On Reminder 68
Headlight Switch 66
High Beam 69
High Beam/Low Beam Select 69
Instrument Cluster 66
Intensity Control 74
Interior 70
Lights On Reminder 68
Low Fuel 140
Malfunction Indicator (Check Engine) 140
Park 151
Seat Belt Reminder 133
Security Alarm 139
Tire Pressure Monitoring (TPMS) 144
Turn Signal 70, 150, 209
Vanity Mirror 72
Warning (Instrument Cluster Description) 150
Loading Vehicle 268
Tires 384
Locks 36
Door 36
Lubrication, Body 360
Luggage Carrier 117
Lug Nuts 404

Maintenance Free Battery. 358
Maintenance, General 354
Maintenance Procedures 354
Maintenance Schedule. 344
Malfunction Indicator Light (Check Engine) . .140, 343
Manual, Service 12
Manual Transmission 223, 370
Fluid Level Check 370
Frequency Of Fluid Change 371
Lubricant Selection 370
Shift Speeds 225
Master Cylinder (Brakes) 369
Methanol 262

Mirrors 57
Heated 59
Outside 58
Rearview 57
Vanity 72
Modifications/Alterations, Vehicle 6
MTBE/ETBE 262

New Vehicle Break-In Period 217

Occupant Restraints 162
Octane Rating, Gasoline (Fuel). 261, 408
Oil, Engine 355, 408
Capacity 407
Change Interval 356
Checking 355
Disposal 357
Filter 357, 408
Filter Disposal 357
Materials Added To 356
Pressure Warning Light 137
Recommendation 356, 407
Viscosity 356, 407
Oil Filter, Change 357
Oil Filter, Selection 357
Oil Pressure Light 137
Onboard Diagnostic System 121
Operating Precautions 121
Operator Manual (Owner's Manual) 4
Outside Rearview Mirrors 58
Overheating, Engine 330
Owner's Manual (Operator Manual) 4, 12

Paint Care 372
Parking Brake. 218
ParkSense System, Rear 246
Pets 205
Placard, Tire And Loading Information. 384, 386
Power
Brakes 154
Outlet (Auxiliary Electrical Outlet) 112
Sunroof 100
Pregnant Women And Seat Belts. 171
Preparation For Jacking 317
Pretensioners
Seat Belts 172

Radial Ply Tires 391
Radio Frequency
General Information 27, 29, 32, 33, 44

Radio Operation 447
Rain Sensitive Wiper System 76
Rear Camera 255
Rear Cross Path 64
Rear ParkSense System 246
Rear Window Defroster. 78
Rear Wiper/Washer 78
Recreational Towing 284
Reformulated Gasoline 262
Refrigerant 359
Reminder, Lights On. 68
Reminder, Seat Belt 164
Remote Control
  Starting System 29
Remote Keyless Entry 23
  Arm The Alarm 34
  Keyless Enter-N-Go 38
Remote Sound System (Radio) Controls 446
Remote Starting
  Exit Remote Start Mode 31
  Uconnect Customer Programmable Features 32
  Uconnect Settings 32
Remote Starting System 29
Replacement Keys 26
Replacement Parts. 344
Replacement Tires 395
Reporting Safety Defects 11
Restraint, Head 53
Restraints, Child 188
Roll Over Warning 6
Roof Type Carrier 117
Rotation, Tires 399

Safety Checks Inside Vehicle 207
Safety Checks Outside Vehicle 209
Safety Defects, Reporting. 11
Safety, Exhaust Gas 206
Safety Information, Tire 380
Safety Tips 205
Schedule, Maintenance 344
Seat Belt
  Adjustable Upper Shoulder Belt Anchorage 169
  Automatic Locking Retractor (ALR) 172
  Energy Management Feature 172
  Lap/Shoulder Belt Operation 167
  Lap/Shoulder Belts 165
  Lap/Shoulder Belt Untwisting 169
  Pregnant Women 171
  Seat Belt Pretensioner 172
  Seat Belt Reminder 164

Seat Belt Maintenance 378
Seat Belt Reminder 164
Seat Belts. 163, 207
Adjustable Shoulder Belt 169
Adjustable Upper Shoulder Anchorage 169
Child Restraint 188
Front Seat 163, 165, 167
Inspection 207
Operating Instructions 167
Pregnant Women 171
Pretensioners 172
Rear Seat 165
Reminder 133
Untwisting Procedure 169
Seats 46
Adjustment 46
Head Restraints 53
Seatback Release 46
Tilting 46
Security Alarm 139
Arm The System 34
Selection Of Coolant (Antifreeze) 408
Sentry Key (Immobilizer) 32
Sentry Key Replacement 26
Service Assistance 8
Service Contract 10
Service Manuals 12
Shifting
Manual Transmission 223
Shift Lever Override 331
Shoulder Belts 165
Side View Mirror Adjustment 58
Signals, Turn. 70, 150, 209
Snow Chains (Tire Chains). 397
Snow Tires 393
Spark Plugs 408
Specifications
Fuel (Gasoline) 408
Oil 408
Speed Control (Cruise Control). 235
Starting. 29, 214
Cold Weather 216
Engine Fails To Start 215
Remote 29
Starting And Operating 214
Starting Procedures 214
Steering
Tilt Column 55
Wheel, Heated 56
Wheel, Tilt 55

Steering Wheel Audio Controls 446
Steering Wheel Mounted Sound System Controls . .446
Storage, Vehicle 96
Stuck, Freeing 332
Sun Roof 100
Sun Visor Extension 111
Supplemental Restraint System - Air Bag 176
Sway Control, Trailer 274
System, Remote Starting 29

Telescoping Steering Column 55
Temperature Control, Automatic (ATC) 94
Tilt Steering Column 55
Time Delay, Headlight 68
Tip Start 215
Tire And Loading Information Placard 384, 386
Tire Markings 380
Tires 209, 389, 398
  Aging (Life Of Tires) 395
  Air Pressure 384, 389
  Chains 397
  Changing 315, 379
  General Information 389
  High Speed 391
  Inflation Pressures 390
  Jacking 315, 379
  Life Of Tires 395
  Load Capacity 384, 386
  Pressure Warning Light 144
  Quality Grading 398
  Radial 391
  Replacement 395
  Rotation 399
  Safety 380, 389
  Sizes 381
  Snow Tires 393
  Spinning 394
  Trailer Towing 279
  Tread Wear Indicators 394
Tire Safety Information 380
Tire Service Kit 324
Tongue Weight/Trailer Weight 277
Towing 273
  Disabled Vehicle 334
  Guide 277
  Recreational 284
  Weight 277
Towing Eyes 336
Towing Vehicle Behind A Motorhome 284
Traction 270

Traction Control 159
Trailer Towing 273
Cooling System Tips 283
Hitches 276
Minimum Requirements 278
Trailer And Tongue Weight 277
Wiring 281
Trailer Towing Guide 277
Trailer Weight. 277
Transfer Case
Fluid 409
Transmission
Automatic 226, 371
Fluid 409
Manual 223
Transporting Pets 205
Tread Wear Indicators 394
Turn Signals 70, 150

UCI Connector 445
Uconnect
Customer Programmable Features 32
Uconnect Settings 32
Uconnect Settings
Customer Programmable Features 439
Passive Entry Programming 439
Uconnect Settings 439
Uconnect Voice Command 449
Uniform Tire Quality Grades 398
Universal Consumer Interface (UCI) Connector . . .445
Unleaded Gasoline 261
Untwisting Procedure, Seat Belt 169

Vanity Mirrors 72
Vehicle Loading 268, 386
Vehicle Modifications/Alterations 6
Vehicle Storage. 96
Viscosity, Engine Oil 356

Warning Flasher, Hazard 289
Warning, Roll Over 6
Warnings And Cautions 5
Warranty Information 4, 11
Washer
Adding Fluid 362
Washing Vehicle 373
Water
Driving Through 271
Wheel And Wheel Trim 374
Wheel And Wheel Trim Care 374

Wind Buffeting. 100, 102
Window Fogging 96
Windows 98
Windshield Defroster. 207
Windshield Wiper Blades. 360
Wiper Blade Replacement 360
Wipers, Intermittent 75
Wipers, Rain Sensitive. 76
Wrecker Towing 334

INSTALLATION OF RADIO TRANSMITTING EQUIPMENT

Special design considerations are incorporated into this vehicle's electronic system to provide immunity to radio frequency signals. Mobile two-way radios and telephone equipment must be installed properly by trained personnel. The following must be observed during installation.

The positive power connection should be made directly to the battery and fused as close to the battery as possible. The negative power connection should be made to body sheet metal adjacent to the negative battery connection. This connection should not be fused.

Antennas for two-way radios should be mounted on the roof or the rear area of the vehicle. Care should be used in mounting antennas with magnet bases. Magnets may affect the accuracy or operation of the compass on vehicles so equipped.

The antenna cable should be as short as practical and routed away from the vehicle wiring when possible. Use only fully shielded coaxial cable.

Carefully match the antenna and cable to the radio to ensure a low Standing Wave Ratio (SWR).

Mobile radio equipment with output power greater than normal may require special precautions.

All installations should be checked for possible interference between the communications equipment and the vehicle's electronic systems.

17FB-126-AB
©2016 FCA US LLC. All Rights Reserved.
FIAT is a registered trademark of FCA Group
Marketing S.p.A., used under license by FCA US LLC.

First Edition
Printed in U.S.A.