AUTOMATIC TRANSAXLE SYSTEM

DTC P0500: VEHICLE SPEED SENSOR "A"

DESCRIPTION

The speed sensors detect the wheel speed and send the appropriate signals to the skid control ECU. The skid control ECU converts these wheel speed signals into a 4-pulse signal and outputs it to the TCM via the combination meter. The TCM determines the vehicle speed based on the frequency of these pulse signals.

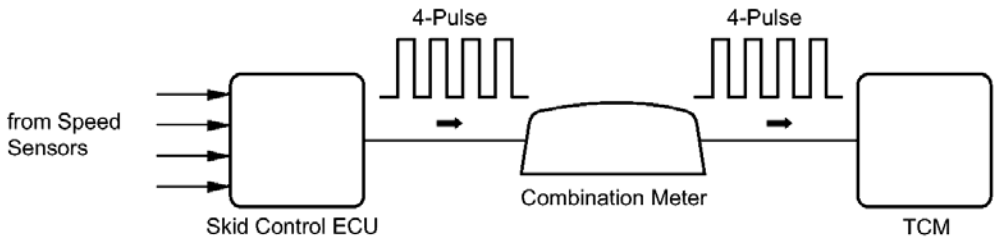

Fig. 1: Vehicle Speed Sensor Pulse Signal Diagram
Courtesy of TOYOTA MOTOR SALES, U.S.A., INC.

DTC No.	DTC Detection Condition	Trouble Area
P0500	When the engine coolant temperature sensor is normal and the counter gear speed is 300 RPM or more, the vehicle speed signal is not input for 2 seconds or more (1 trip detection logic).	• Open or short in vehicle speed signal circuit • Combination meter • Vehicle speed sensor (Brake control system) • Skid control ECU (Brake control system) • TCM

MONITOR DESCRIPTION

The TCM assumes that the vehicle is being driven when the transmission counter gear indicates more than 300 RPM and over 30 seconds have passed since the park/neutral position switch was turned off. If there is no vehicle speed signal with these conditions satisfied, the TCM concludes that there is a vehicle speed signal malfunction. The TCM will turn on the MIL and store the DTC.

MONITOR STRATEGY

Related DTCs	P0500: Vehicle Speed Sensor Circuit
Required sensors/components (Main)	Vehicle speed sensor, Combination meter, Skid control ECU
Required sensors/components (Sub)	Output speed sensor (NC), Engine coolant temperature (ECT) sensor
Frequency of operation	Continuous
Duration	2 seconds
MIL operation	Immediately
Sequence operation	None

TYPICAL ENABLING CONDITIONS

Engine	Running
Transmission counter gear revolution	300 RPM or more
Battery voltage	8 V or more
Ignition switch	ON
Starter	OFF
Either a or b is met (See below)	
a. All of the following conditions are met	
ECT	20°C (68°F) or more
ECT sensor fail (P0115, P0117, P0118, P0125)	Not detected
Time after park/neutral position switch ON to OFF	2 seconds or more
b. All of the following conditions are met	
ECT	Less than 20°C (68°F)
ECT sensor fail (P0115, P0117, P0118, P0125)	Detected
Time after park/neutral position switch ON to OFF	30 seconds or more

TYPICAL MALFUNCTION THRESHOLDS

Vehicle speed sensor signal	No pulse input

WIRING DIAGRAM

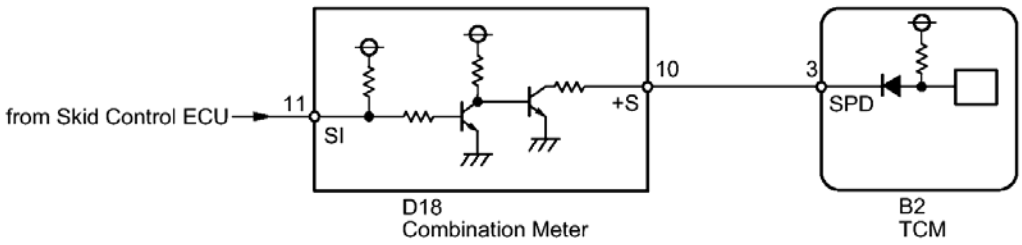

Fig. 2: Vehicle Speed Sensor Circuit - Wiring Diagram
Courtesy of TOYOTA MOTOR SALES, U.S.A., INC.

INSPECTION PROCEDURE

NOTE: **Perform the universal trip to clear permanent DTCs. Refer to DTC CHECK / CLEAR .**

PROCEDURE

1. **READ VALUE USING TECHSTREAM (VEHICLE SPEED)**
   a. Drive the vehicle and check whether the operation of the speedometer in the combination meter is normal.

      HINT:

      - The vehicle speed sensor is operating normally if the speedometer reading is normal.
      - If the speedometer does not operate, check it by following the procedure described for a speedometer malfunction.

   b. Connect the Techstream to the DLC3.
   c. Turn the ignition switch to ON.
   d. Turn the Techstream on.
   e. Enter the following menus: Powertrain / ECT / Data List / All Data / Vehicle Speed.
   f. Drive the vehicle.
   g. Read the value displayed on the Techstream.

      OK

      Vehicle speeds displayed on the Techstream and speedometer display are equal.

   NG --> See step 2

   OK --> See step 6

2. **INSPECT COMBINATION METER (SPD SIGNAL WAVEFORM)**
   a. Inspect the combination meter using an oscilloscope.

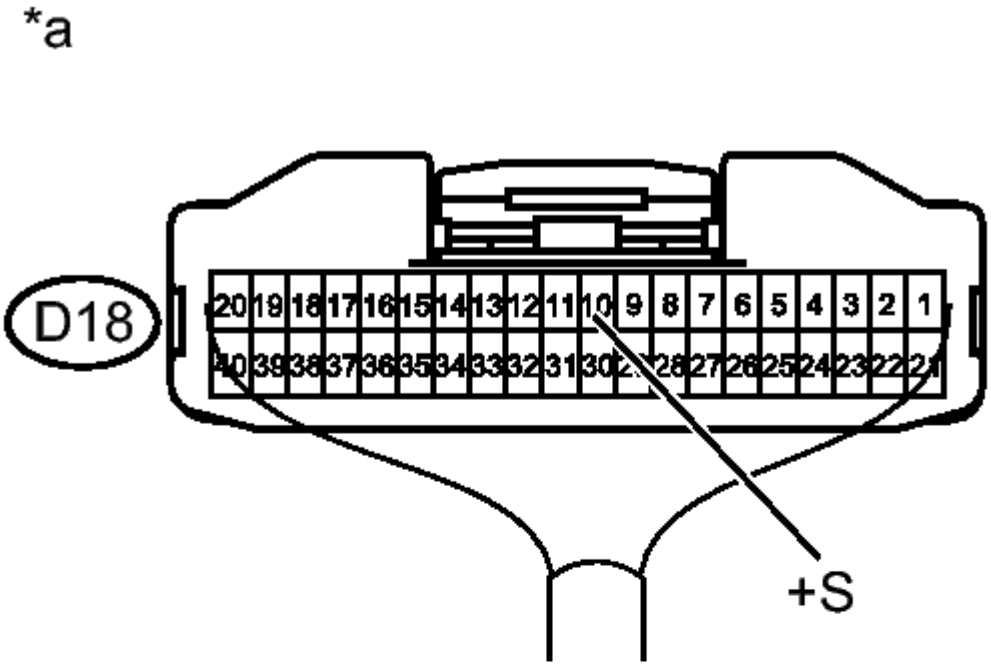

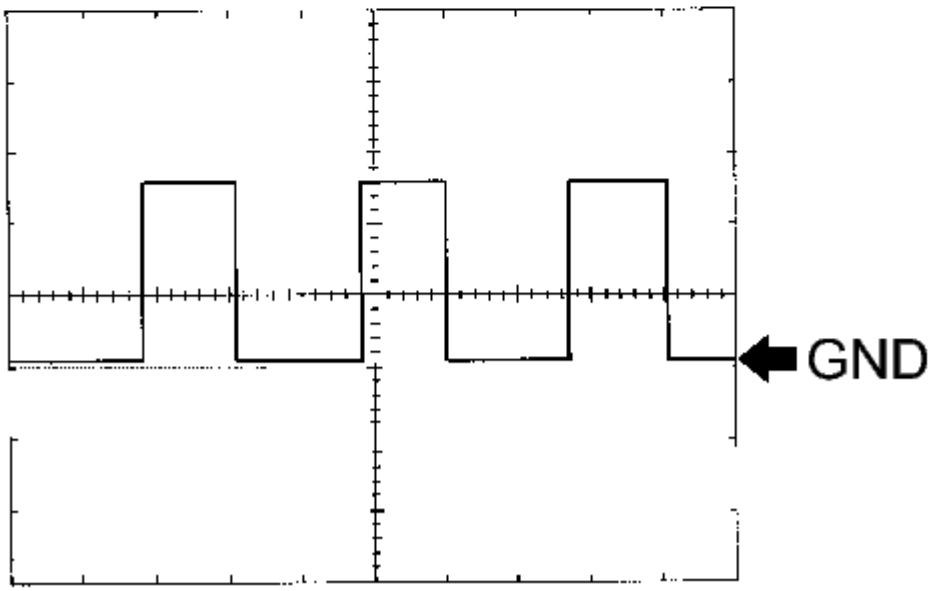

Fig. 3: Measuring Voltage Between Combination Meter And Body Ground With Waveform Reference

Courtesy of TOYOTA MOTOR SALES, U.S.A., INC.

1. Move the shift lever to N.
2. Jack up the vehicle.
3. Turn the ignition switch to ON.
4. Measure the voltage between the terminal of the combination meter assembly and the body ground while the wheel is turned slowly.

   Standard Voltage

Tester Connection	Switch Condition	Specified Condition
D18-10 (+S) - Body ground	Ignition switch ON	Voltage generated intermittently

TEXT IN ILLUSTRATION

*a	Component with harness connected: (Combination Meter)

HINT:

The output voltage should fluctuate up and down, similarly to the diagram, when the wheel is turned slowly.

NG --> See step 5

OK: Go to next step

3. **CHECK HARNESS AND CONNECTOR (COMBINATION METER - TCM)**
   a. Disconnect the combination meter connector.
   b. Disconnect the TCM connector.
   c. Measure the resistance according to the value(s) in the table below.

   Standard Resistance

Tester Connection	Condition	Specified Condition
D18-10 (+S) - B2-3 (SPD)	Always	Below 1 ohms

NG --> REPAIR OR REPLACE HARNESS OR CONNECTOR

OK --> See step 4

4. **REPLACE TCM. Refer to REMOVAL**
5. **GO TO METER / GAUGE SYSTEM (SPEED SIGNAL CIRCUIT). Refer to Speed Signal Circuit**
6. **SYMPTOM SIMULATION AND DTC CHECK. Refer to HOW TO PROCEED WITH TROUBLESHOOTING**

DTC P0560: SYSTEM VOLTAGE

DESCRIPTION

The battery supplies electricity to the TCM even when the ignition switch is off. This power allows the TCM to store data such as DTC history and freeze frame data. If the battery voltage falls below a minimum level, these memories are cleared and the TCM determines that there is a malfunction in the power supply circuit. When the engine is next started, the TCM will turn on the MIL and store the DTC.

DTC No.	DTC Detection Condition	Trouble Area
P0560	Open in TCM back-up power source circuit. DTC is detected for 3 seconds or more (1 trip detection logic).	• Open in back-up power source circuit • TCM

HINT:

If DTC P0560 is set, the TCM does not store other DTCs.

MONITOR STRATEGY

Related DTCs	P0560: TCM system voltage
Required Sensors/Components (Main)	TCM
Required Sensors/Components (Sub)	-
Frequency of Operation	Continuous
Duration	3 seconds
MIL Operation	Immediately (MIL illuminated after next engine start)
Sequence of Operation	None

TYPICAL ENABLING CONDITIONS

Monitor runs whenever following DTCs are not present:	None

TYPICAL MALFUNCTION THRESHOLDS

TCM power source	Less than 3.5 V
Stand-by RAM	Initialized

WIRING DIAGRAM

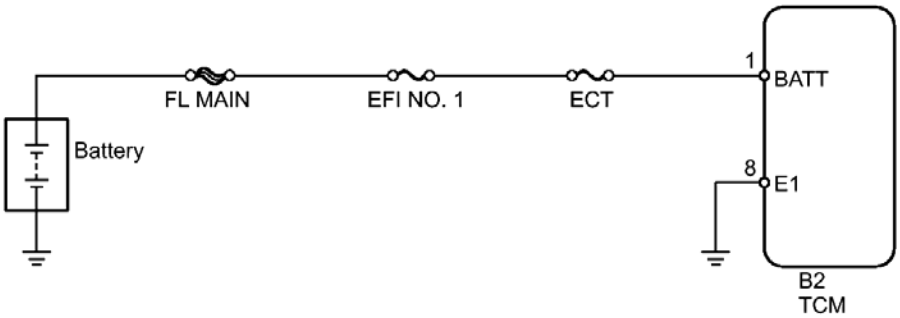

Fig. 4: System Voltage Circuit - Wiring Diagram
Courtesy of TOYOTA MOTOR SALES, U.S.A., INC.

INSPECTION PROCEDURE

NOTE:

- **Inspect the fuses for circuits related to this system before performing the following inspection procedure.**
- **Perform the universal trip to clear permanent DTCs. Refer to DTC CHECK / CLEAR .**

PROCEDURE

1. **CHECK HARNESS AND CONNECTOR (TCM - BATTERY AND BODY GROUND)**
   a. Disconnect the TCM connector.

*a

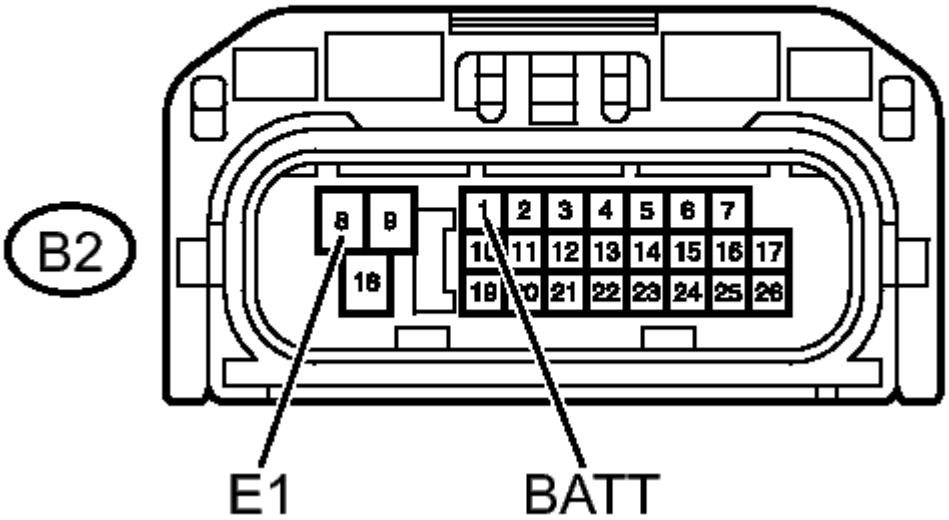

Fig. 5: Measuring Voltage Of TCM To Body Ground
Courtesy of TOYOTA MOTOR SALES, U.S.A., INC.

b. Measure the voltage according to the value(s) in the table below.

Standard Voltage

Tester Connection	Condition	Specified Condition
B2-1 (BATT) - B2-8 (E1)	Always	11 to 14 V

c. Measure the resistance according to the value(s) in the table below.

Standard Resistance

Tester Connection	Condition	Specified Condition
B2-8 (E1) - Body ground	Always	Below 1 ohms

TEXT IN ILLUSTRATION

	Front view of

*a	wire harness connector: (to TCM)

NG --> REPAIR OR REPLACE HARNESS OR CONNECTOR

OK --> See step 2

2. **REPLACE TCM. Refer to REMOVAL**

DTC P0617: STARTER RELAY CIRCUIT HIGH

DESCRIPTION

While the engine is being cranked, battery voltage is applied to terminal STA of the TCM.

If the TCM detects the Starter Control (STA) signal while the vehicle is being driven, it determines that there is a malfunction in the STA circuit. The TCM will turn on the MIL and store the DTC.

This monitor runs when the vehicle is driven at 20 km/h (12.43 mph) for over 20 seconds.

DTC No.	DTC Detection Condition	Trouble Area
P0617	When conditions (a), (b) and (c) are met, positive (+B) battery voltage 10.5 V or more applied to TCM for 20 seconds (1 trip detection logic). (a) Vehicle speed more than 20 km/h (12.43 mph) (b) Engine speed more than 1000 RPM (c) STA signal ON	• Park/neutral position switch • Ignition switch • Starter relay circuit • TCM

MONITOR STRATEGY

Related DTCs	P0617: Starter signal
Required Sensors/Components (Main)	Starter (ST) relay, Park/neutral position switch, ignition switch
Required Sensors/Components (Sub)	Vehicle speed sensor (VSS), Crankshaft Position (CKP) sensor
Frequency of Operation	Continuous
Duration	20 seconds
MIL Operation	Immediately
Sequence of Operation	None

TYPICAL ENABLING CONDITIONS

Monitor runs whenever these DTCs are not present:	None
Battery voltage	10.5 V or more
Vehicle speed	20 km/h (12.43 mph) or more
Engine speed	1000 RPM or more

TYPICAL MALFUNCTION THRESHOLDS

Starter signal	ON

WIRING DIAGRAM

w/o Smart Key System:

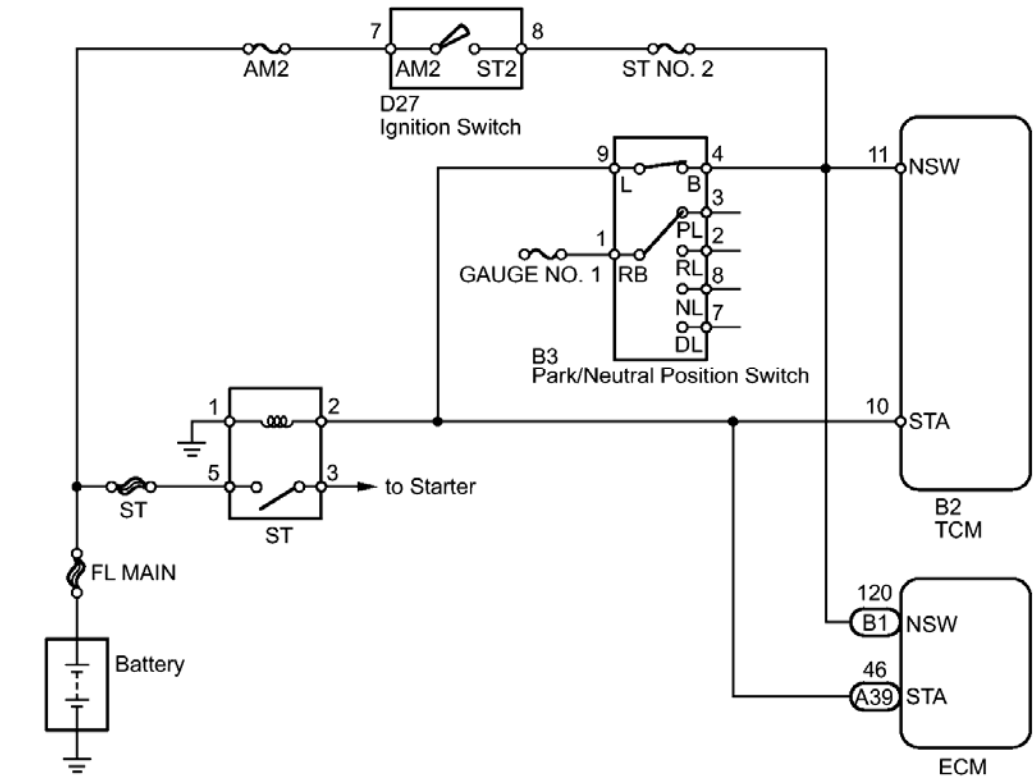

Fig. 6: Starter Relay Circuit - Wiring Diagram (w/o Smart Key System)
Courtesy of TOYOTA MOTOR SALES, U.S.A., INC.

w/ Smart Key System:

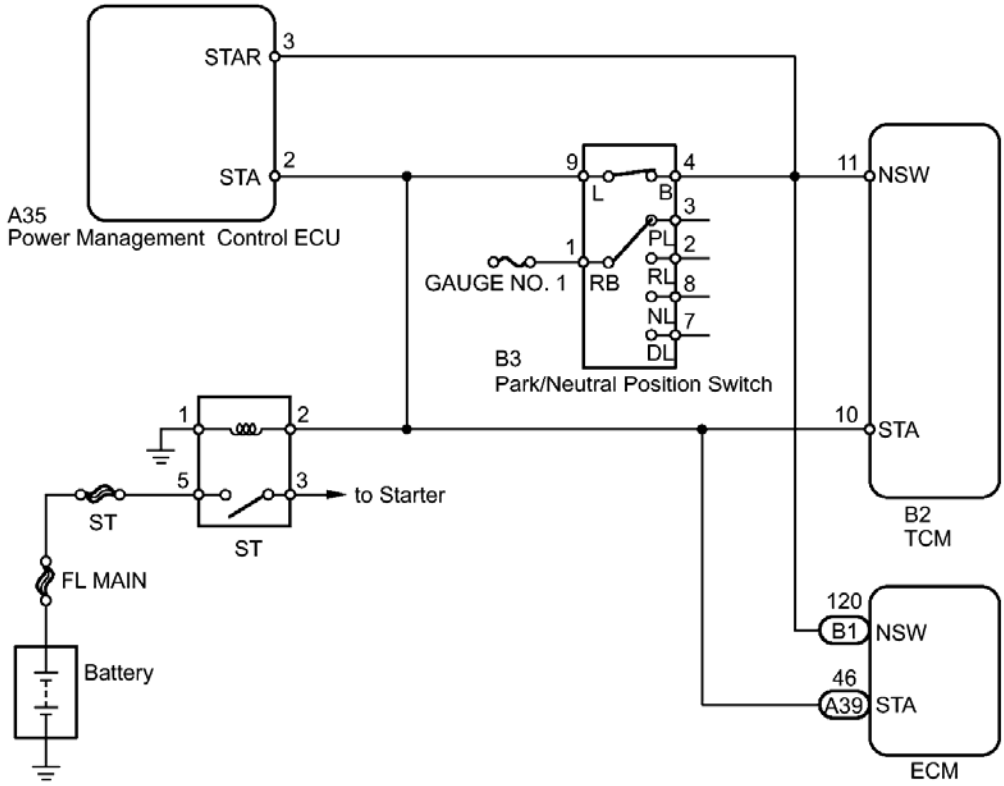

Fig. 7: Starter Relay Circuit - Wiring Diagram (w/ Smart Key System)
Courtesy of TOYOTA MOTOR SALES, U.S.A., INC.

INSPECTION PROCEDURE

NOTE: **Perform the universal trip to clear permanent DTCs. Refer to DTC CHECK / CLEAR .**

HINT:

The following troubleshooting flowchart is based on the premise that the engine is cranked normally. If the engine does not crank, proceed to the problem symptoms table. Refer to **2GR-FE - PROBLEM SYMPTOMS TABLE** or **1AR-FE - PROBLEM SYMPTOMS TABLE** .

PROCEDURE

1. **READ VALUE USING TECHSTREAM (STARTER SIGNAL)**
   a. Connect the Techstream to the DLC3.
   b. Turn the ignition switch to ON.
   c. Turn the Techstream on.
   d. Enter the following menus: Powertrain / ECT / Data List / All Data /Starter Signal.

e. Check the value displayed on the Techstream when the ignition switch is turned to ON and START.

OK

Switch Condition	Starter Signal
ON	Close
START	Open

NG --> See step 2

OK --> See step 11

2. **READ VALUE USING TECHSTREAM (STARTER SIGNAL)**
   a. Turn the Techstream off.
   b. Turn the ignition switch off.
   c. Disconnect the park/neutral position switch connector.
   d. Turn the ignition switch to ON.
   e. Turn the Techstream on.
   f. Enter the following menus: Powertrain / ECT / Data List / All Data / Starter Signal.
   g. Check the value displayed on the Techstream when the ignition switch is turned to ON.

RESULT

Starter Signal	Proceed to
Remains Open	A
Close	B

B --> See step 4

A: Go to next step

3. **INSPECT TCM (STA VOLTAGE)**
   a. Turn the ignition switch off.
   b. Disconnect the ECM connector.

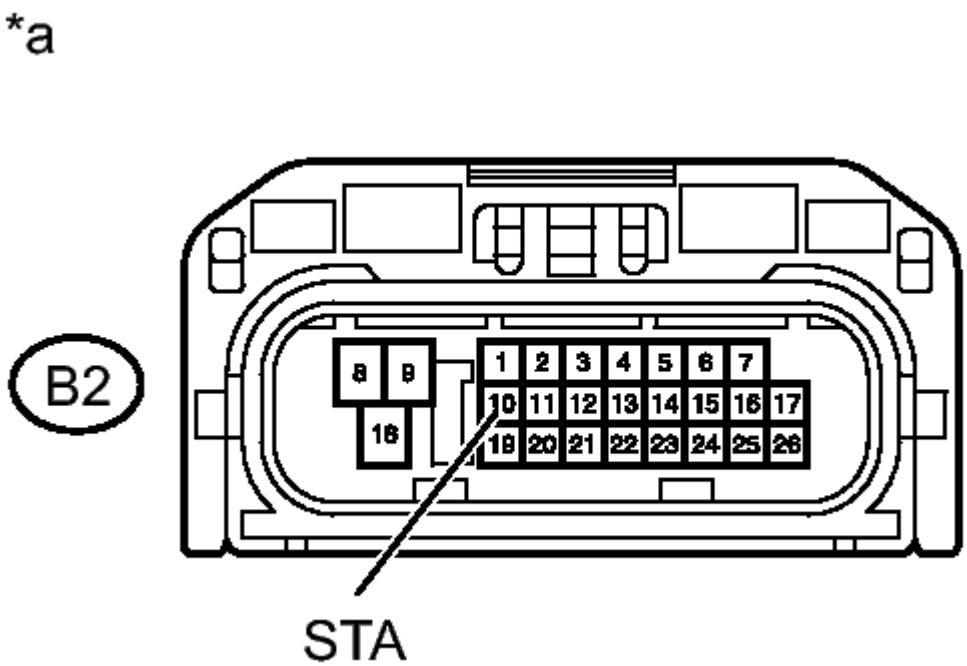

Fig. 8: Measuring Voltage Of TCM (STA Voltage)
Courtesy of TOYOTA MOTOR SALES, U.S.A., INC.

c. Disconnect the power management control ECU connector (w/ Smart Key System).
d. Connect the park/neutral position switch connector.
e. Disconnect the TCM connector.
f. Measure the voltage according to the value(s) in the table below.

RESULT

Tester Connection	Condition	Specified Condition	Proceed to
B2-10 (STA) - Body ground	Always	11 to 14 V	A
		Below 1.5 V	B

TEXT IN ILLUSTRATION

*a	Front view of wire harness connector (to TCM)

B --> See step 12

A --> REPAIR OR REPLACE HARNESS OR CONNECTOR (TCM - PARK/NEUTRAL POSITION SWITCH - ST RELAY AND OTHER ECUS)

4. **INSPECT PARK/NEUTRAL POSITION SWITCH**
   a. Disconnect the park/neutral position switch connector.
   b. Measure the resistance according to the value(s) in the table below.

*a

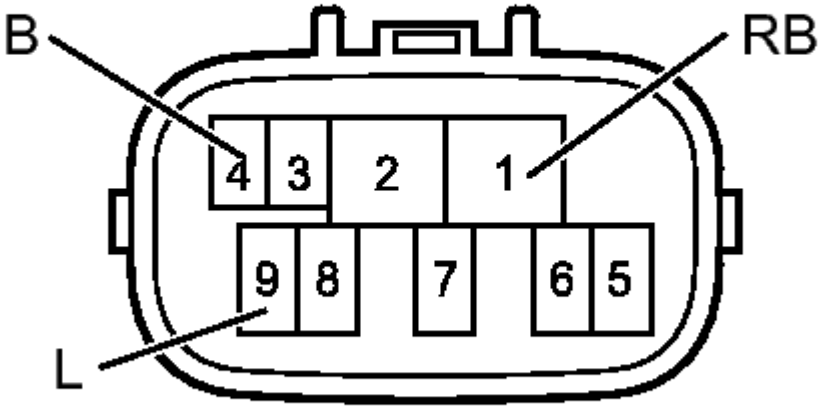

Fig. 9: Measuring Resistance Of Park/Neutral Position Switch
Courtesy of TOYOTA MOTOR SALES, U.S.A., INC.

Standard Resistance

Tester Connection	Switch Condition (Shift Lever Position)	Specified Condition
4 (B) - 9 (L)	P	Below 1 ohms
	N	Below 1 ohms
	Except P and N	10 kohms or higher
	P	10 kohms or higher
		10 kohms

1 (RB) - 9 (L)	R	or higher
	N	10 kohms or higher
	D	10 kohms or higher

TEXT IN ILLUSTRATION

*a	Component without harness connected (Park/Neutral Position Switch)

RESULT

Result	Proceed to
Short between 4 and 9 (w/o Smart Key System)	A
Short between 4 and 9 (w/ Smart Key System)	B
Short between 1 and 9	C

B --> See step 9

C --> See step 13

A: Go to next step

5. **REPLACE PARK/NEUTRAL POSITION SWITCH**
   a. Replace the park/neutral position switch. Refer to **REMOVAL** .

NEXT: Go to next step

6. **CHECK DTC OUTPUT**
   a. Start the engine.
   b. Turn the Techstream on.
   c. Enter the following menus: Powertrain / ECT / Trouble Codes.
   d. Perform the monitor drive pattern. Refer to **MONITOR DRIVE PATTERN**
   e. Check the DTC output on the Techstream.

RESULT

Result	Proceed to
DTC not output	A
P0617 is output	B

B --> See step 7

A --> END

7. **INSPECT IGNITION SWITCH**
   a. Remove the ignition switch.
   b. Measure the resistance according to the value(s) in the table below.

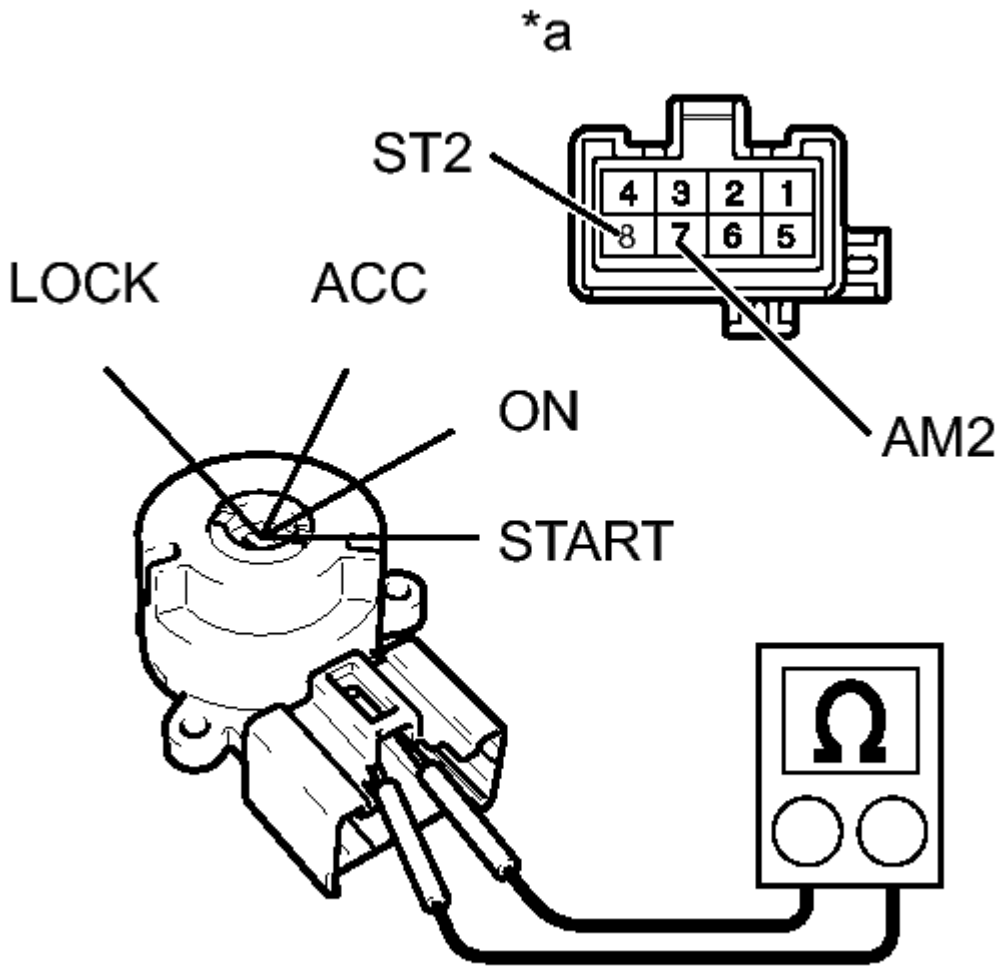

P

Fig. 10: Measuring Resistance Of Ignition Switch
Courtesy of TOYOTA MOTOR SALES, U.S.A., INC.

Standard Resistance

Tester Connection	Switch Condition	Specified Condition
8 (ST2) - Except 7 (AM2) terminal	LOCK, ACC AND ON	10 kohms or higher

TEXT IN ILLUSTRATION

	Component without harness

*a	connected (Ignition Switch)

NG --> See step 14

OK: Go to next step

8. **INSPECT TCM (NSW TERMINAL VOLTAGE)**
   a. Reinstall the ignition switch.
   b. Turn the ignition switch off.
   c. Disconnect the ECM connector.

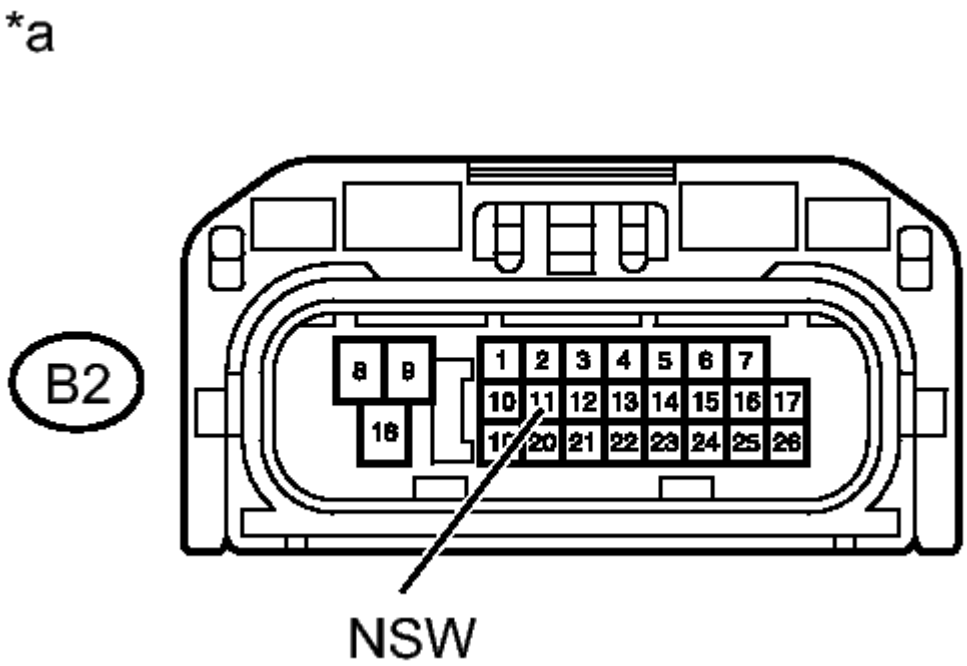

Fig. 11: Measuring Voltage Of TCM (NSW Terminal Voltage)
Courtesy of TOYOTA MOTOR SALES, U.S.A., INC.

   d. Connect the park/neutral position switch connector.
   e. Disconnect the TCM connector.
   f. Measure the voltage according to the value(s) in the table below.

   Standard Voltage

Tester Connection	Switch Condition	Specified Condition
B2-11		

(NSW) - Body ground	Ignition switch off	Below 1.5 V

TEXT IN ILLUSTRATION

*a	Front view of wire harness connector (to TCM)

NG --> See step 12

OK --> REPAIR OR REPLACE HARNESS OR CONNECTOR (TCM - IGNITION SWITCH - PARK/NEUTRAL POSITION SWITCH)

9. **REPLACE PARK/NEUTRAL POSITION SWITCH**
   a. Replace the park/neutral position switch. Refer to **REMOVAL** .

NEXT: Go to next step

10. **CHECK DTC OUTPUT**
   a. Start the engine.
   b. Turn the Techstream on.
   c. Perform the monitor drive pattern. Refer to **MONITOR DRIVE PATTERN** .
   d. Enter the following menus: Powertrain / ECT / Trouble Codes.
   e. Check the DTC output on the Techstream.

RESULT

Result	Proceed to
DTC not output	A
P0617 is output	B

B --> See step 15

A --> END

11. **CHECK FOR INTERMITTENT PROBLEMS. Refer to HOW TO PROCEED WITH TROUBLESHOOTING**

12. **REPLACE TCM. Refer to REMOVAL**
13. **REPLACE PARK/NEUTRAL POSITION SWITCH. Refer to REMOVAL**
14. **REPLACE IGNITION SWITCH. Refer to REMOVAL**
15. **CHECK STARTER SIGNAL CIRCUIT. Refer to Starter Signal Circuit**

DTC P062F: INTERNAL CONTROL MODULE EEPROM ERROR

DESCRIPTION

The TCM monitors its internal operation and it will set this DTC when it detects an internal malfunction.

DTC No.	DTC Detection Condition	Trouble Area
P062F	TCM internal error (EEPROM)	TCM

MONITOR DESCRIPTION

The TCM monitors its internal operation. If the internal operation is malfunctioning, the TCM will turn on the MIL and store the DTC.

MONITOR STRATEGY

Related DTCs	P062F: Internal control module EEPROM error
Required sensors/Components (Main)	TCM
Required sensors/Components (Related)	-
Frequency of operation	Once per driving cycle
Duration	11 seconds
MIL operation	Immediately
Sequence of operation	None

TYPICAL ENABLING CONDITIONS

Monitor runs whenever following DTCs not present	None
Time after engine start	10 seconds or more
Battery voltage	8 V or higher
Ignition switch	ON
Starter	OFF

TYPICAL MALFUNCTION THRESHOLDS

Permanent fault code data	Mismatch (3 times or more)

INSPECTION PROCEDURE

NOTE: **Perform the universal trip to clear permanent DTCs. Refer to DTC CHECK / CLEAR .**

PROCEDURE

1. **READ OUTPUT DTC (DTC P062F)**
   a. Connect the Techstream to the DLC3.
   b. Turn the ignition switch to ON.
   c. Turn the Techstream on.
   d. Clear DTCs. Refer to **DTC CHECK / CLEAR** .
   e. Turn the ignition switch off and turn the Techstream off.
   f. Disconnect the Techstream.
   g. Disconnect the cable from the negative (-) battery terminal and wait for 1 minute.
   h. Connect the cable to the negative (-) battery terminal.
   i. Connect the Techstream to the DLC3.
   j. Turn the ignition switch to ON.
   k. Turn the Techstream on.
   l. Enter the following menus: Powertrain / ECT / Trouble Codes.
   m. Read DTCs.

   RESULT

Result	Proceed to
No DTC output	A
P062F is output	B

   B --> See step 3

   A --> See step 2

2. **CHECK FOR INTERMITTENT PROBLEMS. Refer to ELECTRONIC CIRCUIT INSPECTION PROCEDURE**
3. **REPLACE TCM. Refer to REMOVAL**

DTC P0705: TRANSMISSION RANGE SENSOR CIRCUIT MALFUNCTION (PRNDL INPUT)

DESCRIPTION

The park/neutral position switch detects the shift lever position and sends signals to the TCM.

DTC No.	DTC Detection Condition	Trouble Area
P0705	(A) Any 2 or more signals of the following are ON simultaneously (2 trip detection logic) • NSW input signal is ON. • R input signal is ON. • D input signal is ON. (B) All switches are OFF simultaneously for NSW, R and D.	• Open or short in park/neutral position switch circuit • Park/neutral position switch • TCM

MONITOR DESCRIPTION

These DTCs indicate a problem with the park/neutral position switch and the wire harness in the park/neutral position switch circuit.

The park/neutral position switch detects the shift lever position and sends signals to the TCM.

For safety, the park/neutral position switch detects the shift lever position so that the engine can be started only when the shift lever is in P or N.

The park/neutral position switch sends a signal to the TCM according to the shift lever position (R or D). The TCM determines that there is a problem with the switch or related parts if it receives more than 1 position signal simultaneously. The TCM will turn on the MIL and store the DTC.

MONITOR STRATEGY

Related DTCs	P0705: Park/neutral position switch/Verify switch input
Required sensors/Components	Park/neutral position switch
Frequency of operation	Continuous
Duration	Condition (A): 2 seconds Condition (B): 60 seconds
MIL operation	2 driving cycles
Sequence of operation	None

TYPICAL ENABLING CONDITIONS

The monitor will run whenever the following DTCs are not present	None
Ignition switch	ON
Battery voltage	10.5 V or more

TYPICAL MALFUNCTION THRESHOLDS

When either condition below is met: Condition (A) or (B)

Condition (A)

When 2 or more of the following signals are input at the same time:

Park/neutral position switch	ON
R position switch	ON
D position switch	ON

Condition (B)

When all conditions below are met:

Park/neutral position switch	OFF
R position switch	OFF
D position switch	OFF

COMPONENT OPERATING RANGE

Park/neutral position switch	The park/neutral position switch sends only one signal to the TCM

WIRING DIAGRAM

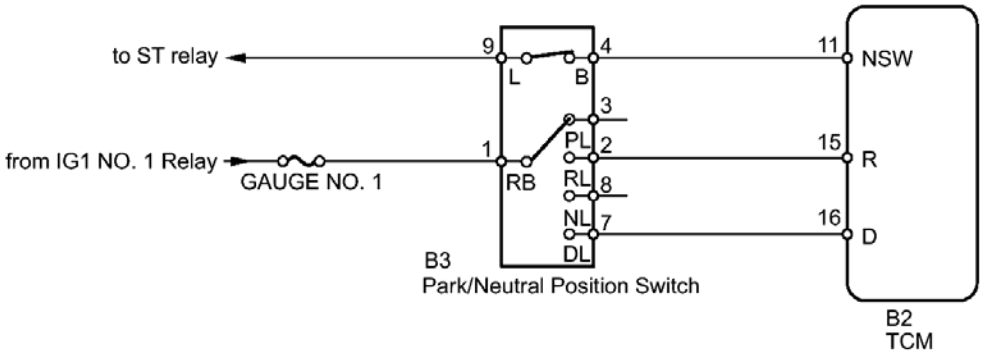

Fig. 12: Transmission Range Sensor Circuit - Wiring Diagram
Courtesy of TOYOTA MOTOR SALES, U.S.A., INC.

INSPECTION PROCEDURE

NOTE:

- **Inspect the fuses for circuits related to this system before performing the following inspection procedure.**
- **Perform the universal trip to clear permanent DTCs. Refer to DTC CHECK / CLEAR .**

HINT:

Using the Techstream to read the Data List allows the values or states of switches, sensors, actuators and other items to be read without removing any parts. This non-intrusive inspection can be very useful because intermittent conditions or signals may be discovered before parts or wiring is disturbed. Reading the Data List information early in troubleshooting is one way to save diagnostic time.

NOTE: **In the table below, the values listed under "Normal Condition" are reference values. Do not depend solely on these reference values when deciding whether a part is faulty or not.**

1. Connect the Techstream to the DLC3.
2. Turn the ignition switch to ON.
3. Turn the Techstream on.
4. Enter the following menus: Powertrain / ECT / Data List / All Data.
5. According to the display on the Techstream, read the Data List.

ECT

Tester Display	Measurement Item / Range	Normal Condition	Diagnostic Note
			When the shift lever

Neutral Position SW Signal	Park/neutral position switch status / ON or OFF	• ON: Shift lever is in P or N • OFF: Shift lever is not in P or N	position displayed on the Techstream differs from the actual position, adjustment of the Park/neutral position switch or the shift cable may be incorrect.
Shift SW Status (R Range)	Park/neutral position switch status / ON or OFF	• ON: Shift lever is in R • OFF: Shift lever is not in R	When the shift lever position displayed on the Techstream differs from the actual position, adjustment of the Park/neutral position switch or the shift cable may be incorrect.
Shift SW Status (D Range)	Park/neutral position switch status / ON or OFF	• ON: Shift lever is in D or S • OFF: Shift lever is not	When the shift lever position displayed on the Techstream differs from the actual position, adjustment of the Park/neutral position switch or

		in D or S	the shift cable may be incorrect.

PROCEDURE

1. **CHECK HARNESS AND CONNECTOR (IG1 RELAY - PARK/NEUTRAL POSITION SWITCH)**
   a. Disconnect the park/neutral position switch connector.

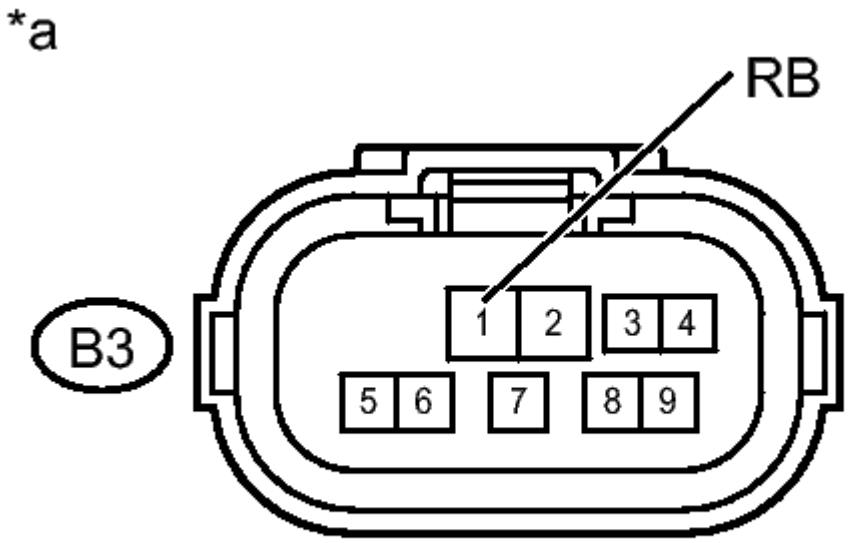

Fig. 13: Checking Harness And Connector (IG1 Relay - Park/Neutral Position Switch)
Courtesy of TOYOTA MOTOR SALES, U.S.A., INC.

   b. Turn the ignition switch to ON.
   c. Measure the voltage according to the value(s) in the table below.

   Standard Voltage

Tester Connection	Switch Condition	Specified Condition
B3-1 (RB) - Body ground	Ignition switch ON	11 to 14 V

TEXT IN ILLUSTRATION

	Front view

*a	of wire harness connector: (to Park/Neutral Position Switch)

NG --> REPAIR OR REPLACE HARNESS OR CONNECTOR

OK: Go to next step

2. **INSPECT TCM (NSW OUTPUT SIGNAL)**
   a. Turn the ignition switch to ON.

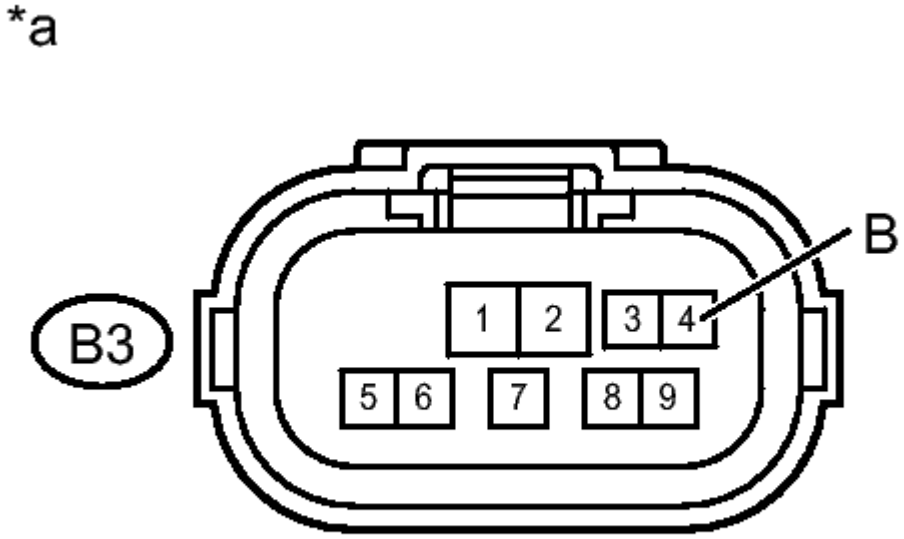

<u>Fig. 14: Measuring Voltage Of TCM (NSW Output Signal)</u>
Courtesy of TOYOTA MOTOR SALES, U.S.A., INC.

   b. Measure the voltage according to the value(s) in the table below.

   Standard Voltage

Tester Connection	Switch Condition	Specified Condition
B3-4 (B) - Body	Ignition switch	11 to 14 V

ground	ON	

TEXT IN ILLUSTRATION

*a	Front view of wire harness connector: (to Park/Neutral Position Switch)

NG --> See step 5

OK: Go to next step

3. **INSPECT PARK/NEUTRAL POSITION SWITCH**
   a. Measure the resistance according to the value(s) in the table below.

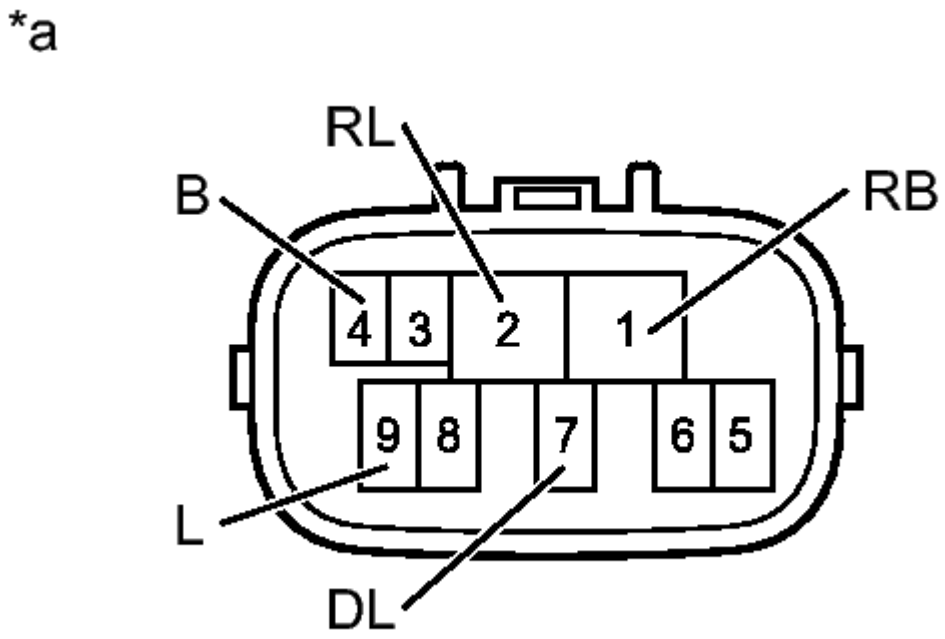

Fig. 15: Measuring Resistance Of Park/Neutral Position Switch
Courtesy of TOYOTA MOTOR SALES, U.S.A., INC.

Standard Resistance

Tester	Switch Condition	Specified

Connection	(Shift Lever Position)	Condition
4 (B) - 9 (L)	P or N	Below 1 ohms
	Except P and N	10 ohms or higher
1 (RB) - 2 (RL)	R	Below 1 ohms
	Except R	10 ohms or higher
1 (RB) - 7 (DL)	D, S, "+" or "-"	Below 1 ohms
	Except D, S, "+" and "-"	10 ohms or higher

TEXT IN ILLUSTRATION

*a	Component without harness connected: (Park/Neutral Position Switch)

NG --> See step 7

OK: Go to next step

4. **CHECK HARNESS AND CONNECTOR (PARK/NEUTRAL POSITION SWITCH - TCM)**
   a. Connect the park/neutral position switch connector.

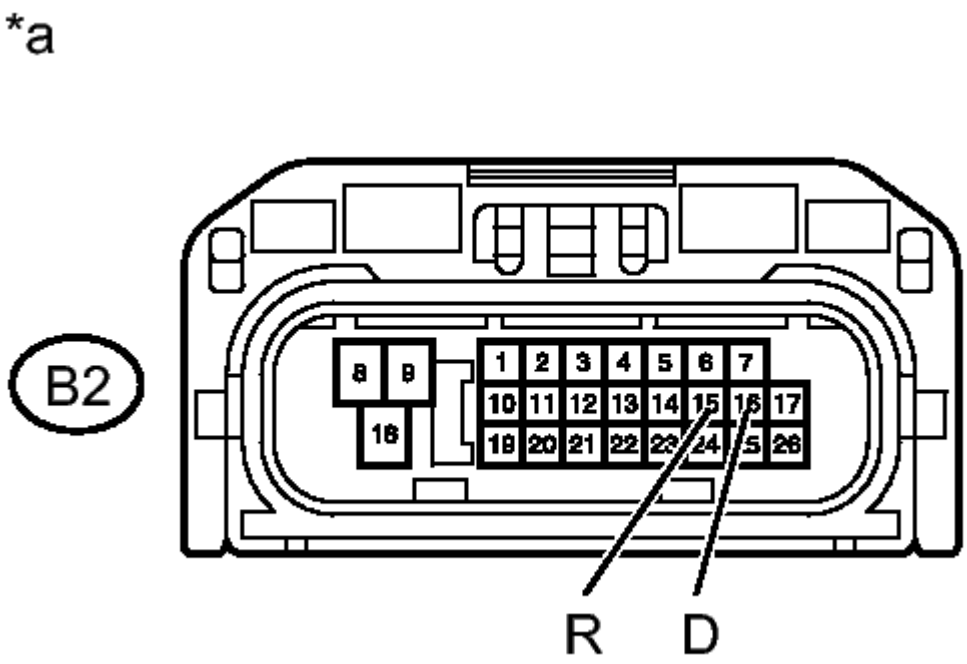

Fig. 16: Checking Harness And Connector (Park/Neutral Position Switch - TCM)
Courtesy of TOYOTA MOTOR SALES, U.S.A., INC.

b. Disconnect the TCM connector.
c. Turn the ignition switch to ON.
d. Measure the voltage according to the value(s) in the table below.

Standard Voltage

Tester Connection	Switch Condition (Shift Lever Position)	Specified Condition
B2-15 (R) - Body ground	R	11 to 14 V*
	Except R	Below 1 V
B2-16 (D) - Body ground	D, S, "+" or "-"	11 to 14 V
	Except D, S, "+" and "-"	Below 1 V

TEXT IN ILLUSTRATION

	Front

*a	view of wire harness connector: (to TCM)

HINT:

*: The voltage will drop slightly due to lighting up of the back up light.

NG --> REPAIR OR REPLACE HARNESS OR CONNECTOR

OK --> See step 6

5. **CHECK HARNESS AND CONNECTOR (PARK/NEUTRAL POSITION SWITCH - TCM)**
   a. Turn the ignition switch off.
   b. Disconnect the park/neutral position switch connector.
   c. Measure the resistance according to the value(s) in the table below.

   Standard Resistance

Tester Connection	Condition	Specified Condition
B3-4 (B) - B2-11 (NSW)	Always	Below 1 ohms
B3-4 (B) or B2-11 (NSW) - Body ground	Always	10 kohms or higher

NG --> REPAIR OR REPLACE HARNESS OR CONNECTOR

OK --> See step 6

6. **REPLACE TCM. Refer to REMOVAL**
7. **REPLACE PARK/NEUTRAL POSITION SWITCH. Refer to REMOVAL**

DTC P0711: TRANSMISSION FLUID TEMPERATURE SENSOR "A" PERFORMANCE

DESCRIPTION

The Automatic Transmission Fluid (ATF) temperature sensor converts the fluid temperature into a resistance value for use by the TCM.

The TCM applies a voltage to the temperature sensor through terminal THO1 of the TCM.

The sensor resistance changes with the ATF temperature. As the temperature becomes higher, the sensor resistance decreases.

One terminal of the sensor is grounded so that the sensor resistance decreases and the voltage goes down as the temperature becomes higher.

The TCM calculates the fluid temperature based on the voltage signal.

DTC No.	DTC Detection Condition	Trouble Area
P0711	One of the following conditions (A), (B) or (C) is met:	ATF temperature sensor
	(A) (a), (b) and (c) are detected: (2 trip detection logic). • (a) Intake air and engine coolant temperatures are more than 15°C (59°F) at engine start • (b) Soak time is more than 5 hours • (c) After normal driving for over 10 minutes and 5 km (3 miles) or more, ATF temperature is less than 20°C (68°F)	
	(B) Both (a) and (b) are detected: (2 trip detection logic). • (a) Intake air and engine coolant temperatures are more than -10°C (14°F) at engine start • (b) After normal driving for over 18 minutes and 20 seconds and 8 km (5 miles) or more, ATF temperature is less than 20°C (68°F)	
	(C) Both (a) and (b) are detected: (2 trip detection logic). • (a) Engine coolant temperature is less than 35°C (95°F) at engine start • (b) ATF temperature is 110°C (230°F) or more when engine coolant temperature reaches 60°C (140°F)	

MONITOR DESCRIPTION

This DTC indicates that there is a problem with output signals from the ATF temperature sensor and that the sensor itself is defective. The ATF temperature sensor converts the ATF temperature into an electrical

resistance value. Based on the resistance, the TCM determines the ATF temperature and detects an open or short in the ATF temperature circuit or a fault of the ATF temperature sensor.

After running the vehicle for a certain period, the ATF temperature should increase. If the ATF temperature is below 20°C (68°F) after running the vehicle for a certain period, the TCM will turn on the MIL and store the DTC.

MONITOR STRATEGY

Related DTCs	P0711: ATF temperature sensor
Required sensors/Components	ATF temperature sensor
Frequency of operation	Continuous
Duration	Condition A, B, C and D: 3 seconds Condition E: Continuous
MIL operation	2 driving cycles
Sequence of operation	None

TYPICAL ENABLING CONDITIONS

ALL

The monitor will run whenever this DTC is not present. (Not circuit malfunction)	P0712, P0713 (ATF temperature sensor circuit (TFT sensor)) P0115, P0117, P0118 (ECT sensor circuit) P0112, P0113 (IAT sensor circuit) P0715, P0717 (Input speed sensor (NT) circuit) P0791, P0793 (Output speed sensor (NC) circuit) P0748 (Shift solenoid valve SL1 circuit) P0778 (Shift solenoid valve SL2 circuit) P0798 (Shift solenoid valve SL3 circuit) P2810 (Shift solenoid valve SL4 circuit) P0327, P0328, P0332, P0333 (KCS sensor circuit) P0120, P0121, P0122, P0123, P0220, P0222, P0223, P0604, P0606, P060A, P060B, P060D, P060E, P0657, P1607, P2102, P2103, P2111, P2112, P2118, P2119, P2135 ((ETCS) Electronic throttle control system) U0100 (CAN communication system) P2610 (Soak timer circuit)
TFT (Transmission fluid temperature) sensor circuit	No circuit malfunction
ECT (Engine coolant temperature) sensor circuit	No circuit malfunction
IAT (Intake air temperature) sensor circuit	No circuit malfunction
Input speed sensor (NT) circuit	No circuit malfunction
Output speed sensor (NC) circuit	No circuit malfunction
Shift solenoid valve SL1 circuit	No circuit malfunction
Shift solenoid valve SL2 circuit	No circuit malfunction

Shift solenoid valve SL3 circuit	No circuit malfunction
Shift solenoid valve SL4 circuit	No circuit malfunction
KCS (Knock control sensor) circuit	No circuit malfunction
Soak timer circuit	No circuit malfunction
(ETCS) Electronic throttle control system	Not system down
CAN communication system	Not system down
Engine	Starting
Time after engine start	12 seconds or more
ECT	-15°C (5°F) or more

CONDITION A:

Time after engine start	10 minutes
Driving distance after engine start	5 km (3 miles) or more
IAT (12 seconds after engine start)	15°C (59°F) or more
ECT (12 seconds after engine start)	15°C (59°F) or more
Soak time	5 hours
Accumulated driving time *1	115 seconds or more
*1: Following conditions are met	
Engine speed (NE) - Input speed (NT)	50 RPM or more
Output speed (NC)	400 RPM or more
Throttle valve opening angle	3% or more
Shift position	Not N or P

CONDITION B:

Time after engine start	18 minutes and 20 seconds
Driving distance after engine start	8 km (5 miles) or more
IAT (12 seconds after engine start)	-10°C (14°F) or more
ECT (12 seconds after engine start)	-10°C (14°F) or more
Accumulated driving time *1	200 seconds or more

CONDITION C:

Time after engine start	30 minutes
Driving distance after engine start	15 km (9.3 miles)
IAT (12 seconds after engine start)	-15°C (5°F) or more
ECT (12 seconds after engine start)	-15°C (5°F) or more
Accumulated driving time *1	400 seconds or more

CONDITION D:

Time after engine start	40 minutes
Driving distance after engine start	20 km (12.4 miles)
Accumulated driving time *1	550 seconds or more

CONDITION E:

Time after ECT reaches 60°C (140°F)	10 seconds or more
ATF temperature (12 seconds after engine start)	110°C (230°F) or more
ECT (12 seconds after engine start)	Below 35°C (95°F)

TYPICAL MALFUNCTION THRESHOLDS

CONDITION A, B, C AND D:

ATF temperature	Below 20°C (68°F)

CONDITION E:

ATF temperature	110°C (230°F) or more

COMPONENT OPERATING RANGE

ATF temperature	20 to 110°C (68 to 230°F)

WIRING DIAGRAM

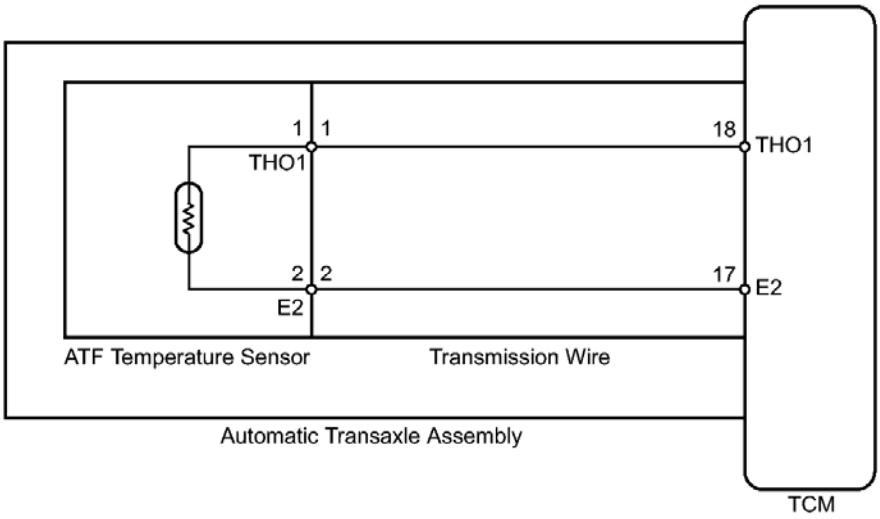

Fig. 17: Transmission Fluid Temperature Sensor Circuit - Wiring Diagram
Courtesy of TOYOTA MOTOR SALES, U.S.A., INC.

INSPECTION PROCEDURE

NOTE:

- **Perform the universal trip to clear permanent DTCs. Refer to DTC CHECK / CLEAR .**
- **If DTCs P0711 and P2610 are output simultaneously, confirm that the ATF temperature is as specified in "Normal Condition" using the Techstream**

first. When the ATF temperature is as specified in "Normal Condition", perform troubleshooting for DTC P2610. Refer to DTC P2610: ECM / PCM Internal Engine Off Timer Performance .

- **In the table below, the values listed under "Normal Condition" are reference values.**

HINT:

Using the Techstream to read the Data List allows the values or states of switches, sensors, actuators and other items to be read without removing any parts. This non-intrusive inspection can be very useful because intermittent conditions or signals may be discovered before parts or wiring is disturbed. Reading the Data List information early in troubleshooting is one way to save diagnostic time.

1. Warm up the engine.
2. Turn the ignition switch off.
3. Connect the Techstream to the DLC3.
4. Turn the ignition switch to ON.
5. Turn the Techstream on.
6. Enter the following menus: Powertrain / ECT / Data List / All Data.
7. According to the display on the Techstream, read the Data List.

ECT

Tester Display	Measurement Item/Range	Normal Condition	Diagnostic Note
A/T Oil Temperature 1	ATF temperature sensor value/ Min.: -40°C (-40°F) Max.: 215°C (419°F)	• After stall speed test: Approximately 80°C (176°F) • While engine is cold: Equal to ambient temperature	If value is -40°C (-40°F) or 150°C (302°F), ATF temperature sensor circuit is open or short circuited

HINT:

When DTC P0712 is output and the Techstream indicates 150°C (302°F) or more, there is a short circuit.

When DTC P0713 is output and the Techstream indicates -40°C (-40°F), there is an open circuit.

Measure the resistance between terminal THO1 (OT) and body ground.

Temperature	

Displayed	Malfunction
-40°C (-40°F)	Open circuit
150°C (302°F) or more	Short circuit

HINT:

If a circuit related to the ATF temperature sensor becomes open, P0713 is immediately set (in 0.5 seconds). When P0713 is set, P0711 cannot be detected.

It is not necessary to inspect the circuit when P0711 is set.

PROCEDURE

1. **CHECK OTHER DTCS OUTPUT (IN ADDITION TO DTC P0711)**
   a. Connect the Techstream to the DLC3.
   b. Turn the ignition switch to ON.
   c. Turn the Techstream on.
   d. Enter the following menus: Powertrain / ECT / Trouble Codes.
   e. Read the DTCs using the Techstream.

   RESULT

Result	Proceed to
Only P0711 is output	A
P0711 and other DTCs are output	B

   HINT:

   If any other codes besides P0711 are output, perform troubleshooting for those DTCs first.

B --> See step 3

A: Go to next step

2. **CHECK TRANSMISSION FLUID LEVEL**
   a. Check the transmission fluid level. Refer to **ADJUSTMENT** .

OK

Automatic transmission fluid level is correct.

NG --> ADJUST FLUID LEVEL

OK --> See step 4

3. **GO TO DTC CHART. Refer to DIAGNOSTIC TROUBLE CODE CHART**
4. **REPLACE ATF TEMPERATURE SENSOR ASSEMBLY. Refer to REMOVAL**

DTC P0712: TRANSMISSION FLUID TEMPERATURE SENSOR "A" CIRCUIT LOW INPUT; DTC P0713: TRANSMISSION FLUID TEMPERATURE SENSOR "A" CIRCUIT HIGH INPUT

DESCRIPTION

The Automatic Transmission Fluid (ATF) temperature sensor converts the fluid temperature into a resistance value for use by the TCM.

The TCM applies a voltage to the temperature sensor through terminal THO1 of the TCM.

The sensor resistance changes with the ATF temperature. As the temperature becomes higher, the sensor resistance decreases.

One terminal of the sensor is grounded so that the sensor resistance decreases and the voltage goes down as the temperature becomes higher.

The TCM calculates the fluid temperature based on the voltage signal.

DTC No.	DTC Detection Condition	Trouble Area
P0712	ATF temperature sensor resistance is less than 79 ohms for 0.5 seconds or more (1 trip detection logic)	• Short in ATF temperature sensor circuit • Transmission wire • ATF temperature sensor • TCM
P0713	ATF temperature sensor resistance is more than 156 kohms for 0.5 seconds or more. Either of the following conditions is met (1 trip detection logic):	• Open in ATF temperature sensor circuit • Transmission wire • ATF temperature sensor • TCM
	Condition (A): 335 seconds or more have elapsed after the engine start when engine coolant temperature or intake air temperature is -29.375°C (-	

	20.875°F) or less.	
	Condition (B): 10 seconds or more have elapsed after the engine start when engine coolant temperature and intake air temperature are more than -29.375°C (- 20.875°F).	

MONITOR DESCRIPTION

These DTCs indicate an open or short in the ATF temperature sensor circuit. The ATF temperature sensor converts ATF temperature into an electrical resistance value. Based on the resistance, the TCM determines the ATF temperature, and the TCM detects an open or short in the ATF temperature circuit. If the resistance value of the ATF temperature is less than 79 ohms*1 or more than 156 kohms*2, the TCM interprets this as a fault in the ATF sensor or wiring. The TCM will turn on the MIL and store the DTC.

*1: 150°C (302°F) or more is indicated regardless of the actual ATF temperature.

*2: -40°C (-40°F) is indicated regardless of the actual ATF temperature.

HINT:

The ATF temperature can be checked on the Techstream display.

MONITOR STRATEGY

Related DTCs	P0712: ATF temperature sensor/Range check (Low resistance) P0713: ATF temperature sensor/Range check (High resistance)
Required sensors/Components	ATF temperature sensor
Frequency of operation	Continuous
Duration	0.5 seconds
MIL operation	Immediately
Sequence of operation	None

TYPICAL ENABLING CONDITIONS

P0712: RANGE CHECK (LOW RESISTANCE)

The monitor will run whenever these DTCs are not	None

present.	
Battery voltage	8 V or more
Ignition switch	ON

P0713: Range check (High resistance)

One of the following conditions is met: Condition (A) or (B)

CONDITION (A)

Engine coolant temperature (ECT) or intake air temperature (IAT) at engine start	-29.375° C (-20.875° F) or less
Time after engine start	335 seconds or more
ECT sensor circuit fail (P0115, P0117, P0118)	Not detected
IAT sensor circuit fail (P0112, P0113)	Not detected

CONDITION (B)

Engine coolant temperature (ECT) or intake air temperature (IAT) at engine start	More than -29.375° C (-20.875° F)
Time after engine start	10 seconds or more
ECT sensor	

circuit fail (P0115, P0117, P0118)	Not detected
IAT sensor circuit fail (P0112, P0113)	Not detected

TYPICAL MALFUNCTION THRESHOLDS

P0712: RANGE CHECK (LOW RESISTANCE)

ATF temperature sensor resistance (ATF temperature sensor output temperature)	Less than 79 ohms (Higher than 164°C(327.2°F))

P0713: RANGE CHECK (HIGH RESISTANCE)

ATF temperature sensor resistance (ATF temperature sensor output temperature)	More than 156 kohms (Less than -48°C(-54.4°F))

COMPONENT OPERATING RANGE

ATF temperature sensor resistance (ATF temperature sensor output temperature)	79 to 156 kohms (-48 to 164°C(-54.4 to 327.2°F))

WIRING DIAGRAM

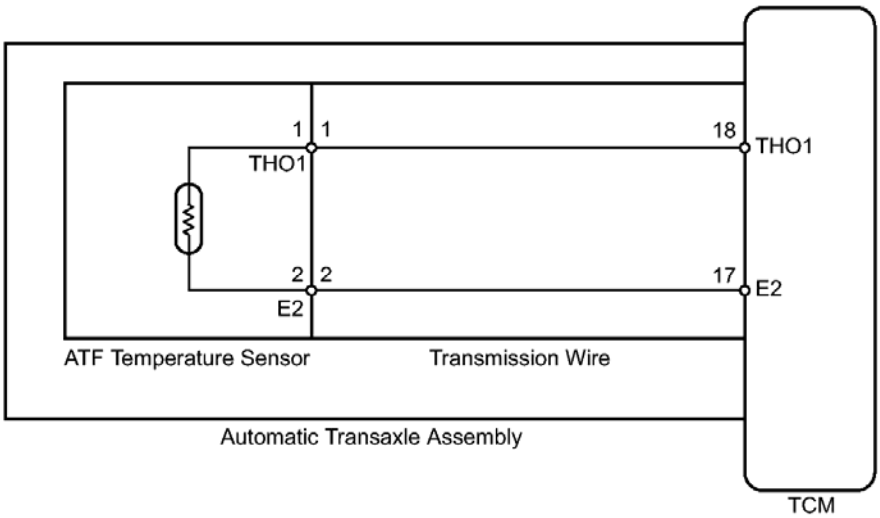

Fig. 18: Transmission Fluid Temperature Sensor Circuit - Wiring Diagram
Courtesy of TOYOTA MOTOR SALES, U.S.A., INC.

INSPECTION PROCEDURE

NOTE: **Perform the universal trip to clear permanent DTCs. Refer to DTC CHECK / CLEAR .**

HINT:

Using the Techstream to read the Data List allows the values or states of switches, sensors, actuators and other items to be read without removing any parts. This non-intrusive inspection can be very useful because intermittent conditions or signals may be discovered before parts or wiring is disturbed. Reading the Data List information early in troubleshooting is one way to save diagnostic time.

NOTE: **In the table below, the values listed under "Normal Condition" are reference values. Do not depend solely on these reference values when deciding whether a part is faulty or not.**

1. Warm up the engine.
2. Turn the ignition switch off.
3. Connect the Techstream to the DLC3.
4. Turn the ignition switch to ON.
5. Turn the Techstream on.
6. Enter the following menus: Powertrain / ECT / Data List / All Data.
7. According to the display on the Techstream, read the Data List.

ECT

Tester Display	Measurement Item/Range	Normal Condition	Diagnostic Note
A/T Oil Temperature 1	ATF temperature sensor value/ Min.: -40°C (-40°F) Max.: 215°C (419°F)	• After stall speed test: Approximately 80°C (176°F) • While engine is cold: Equal to ambient temperature	If value is -40°C (-40°F) or 150°C (302°F), ATF temperature sensor circuit is open or short circuited

HINT:

When DTC P0712 is output and the Techstream indicates 150°C (302°F) or more, there is a short circuit.

When DTC P0713 is output and the Techstream indicates -40°C (-40°F), there is an open circuit.

Measure the resistance between terminal THO1 (OT) and body ground.

Temperature Displayed	Malfunction
-40°C (-40°F)	Open circuit
150°C (302°F) or more	Short circuit

HINT:

If the circuit related to the ATF temperature sensor becomes open, P0713 is immediately set (in 0.5 seconds). When P0713 is set, P0711 cannot be detected.

It is not necessary to inspect the circuit when P0711 is set.

PROCEDURE

1. **INSPECT TRANSMISSION WIRE (ATF TEMPERATURE SENSOR)**
   a. Remove the TCM from the transaxle.

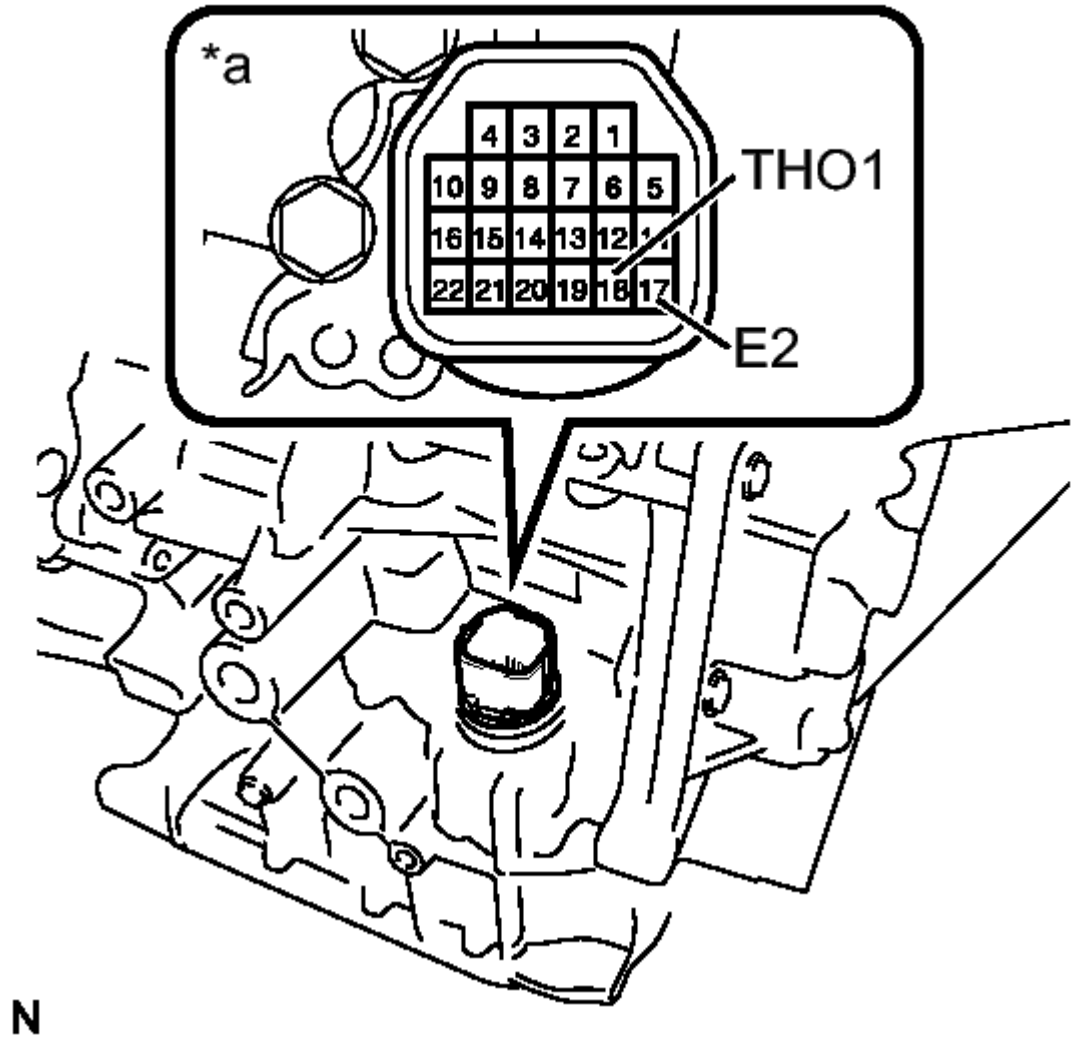

Fig. 19: Inspecting Transmission Wire (ATF Temperature Sensor)
Courtesy of TOYOTA MOTOR SALES, U.S.A., INC.

b. Measure the resistance according to the value(s) in the table below.

Standard Resistance

Tester Connection	Condition	Specified Condition
17 (E2) - 18 (THO1)	Always	79 ohms to 156 kohms
17 (E2) - Body ground	Always	10 kohms or higher
18 (THO1)		

- Body ground	Always	10 kohms or higher

TEXT IN ILLUSTRATION

*a	Component without harness connected: (Transmission Wire)

HINT:

If the resistance is out of the specified range with the ATF temperature shown in the table below, the driveability of the vehicle may decrease.

ATF Temperature	Specified Condition
10°C (50°F)	5 to 8 kohms
25°C (77°F)	2.5 to 4.5 kohms
110°C (230°F)	0.22 to 0.28 kohms

NG --> See step 2

OK --> See step 4

2. **INSPECT ATF TEMPERATURE SENSOR**
   a. Disconnect the transmission wire connector from the ATF temperature sensor assembly.

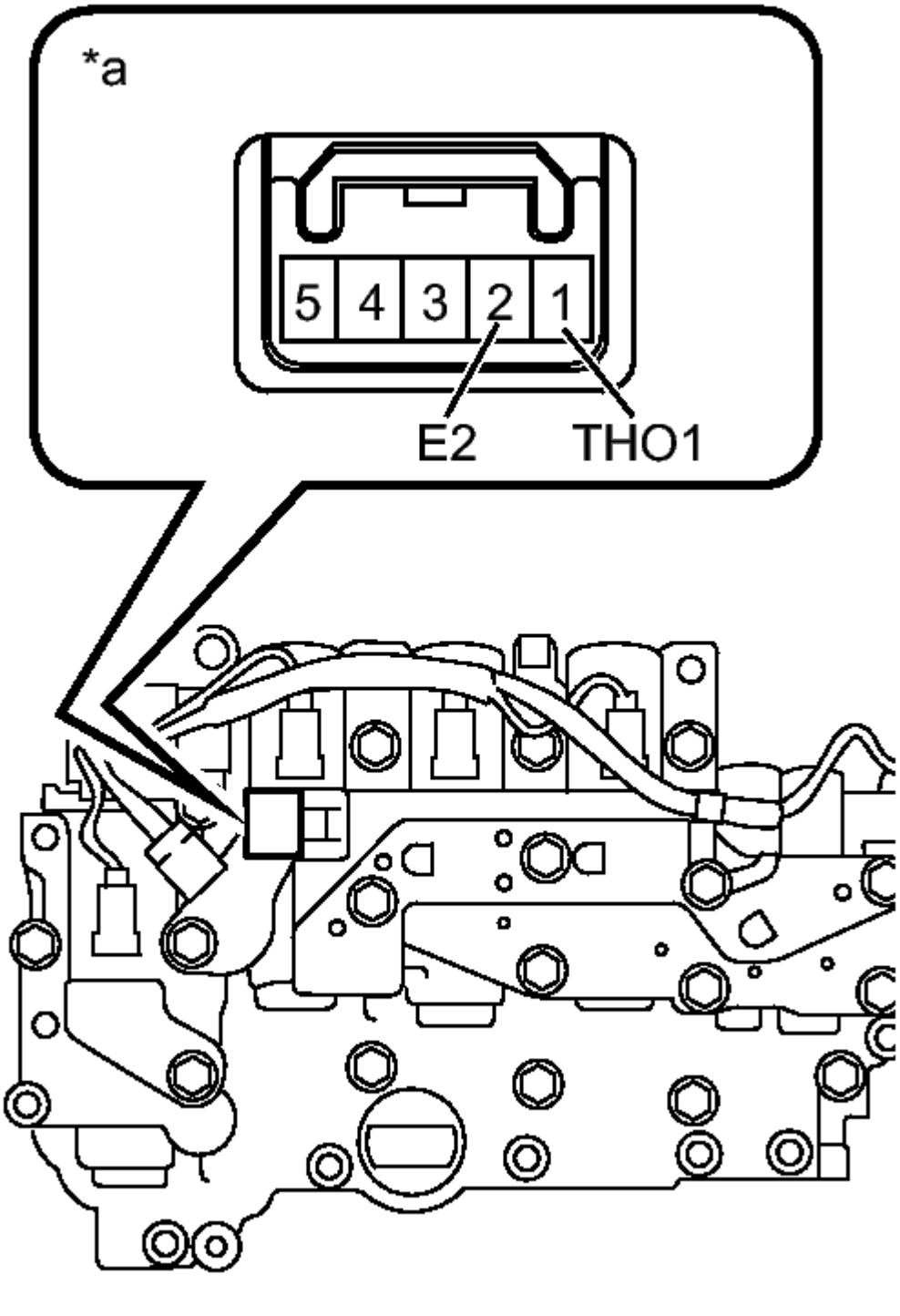

Fig. 20: Inspecting ATF Temperature Sensor
Courtesy of TOYOTA MOTOR SALES, U.S.A., INC.

b. Measure the resistance according to the value(s) in the table below.

Standard Resistance

Tester Connection	Condition	Specified Condition
1 (THO1) - 2 (E2)	Always	79 ohms to 156 kohms
1 (THO1) - Body ground	Always	10 kohms or higher
2 (E2) - Body ground	Always	10 kohms or higher

TEXT IN ILLUSTRATION

*a	Component without harness connected: (ATF Temperature Sensor)

HINT:

If the resistance is out of the specified range with the ATF temperature shown in the table below, the driveability of the vehicle may decrease.

ATF Temperature	Specified Condition
10°C (50°F)	5 to 8 kohms
25°C (77°F)	2.5 to 4.5 kohms
110°C (230°F)	0.22 to 0.28 kohms

NG --> See step 5

OK --> See step 3

3. **REPLACE TRANSMISSION WIRE. Refer to REMOVAL**
4. **REPLACE TCM. Refer to REMOVAL**
5. **REPLACE ATF TEMPERATURE SENSOR ASSEMBLY. Refer to REMOVAL**

DTC P0715: INPUT / TURBINE SPEED SENSOR CIRCUIT MALFUNCTION; DTC P0717: INPUT SPEED SENSOR CIRCUIT NO SIGNAL

DESCRIPTION

This sensor detects the rotation speed of the turbine which shows the input speed of the transaxle. By comparing the input speed signal (NT) with the output speed sensor signal (NC), the TCM detects the shift timing of the gears and appropriately controls the engine torque and hydraulic pressure according to various conditions, thus, providing smooth gear shifts.

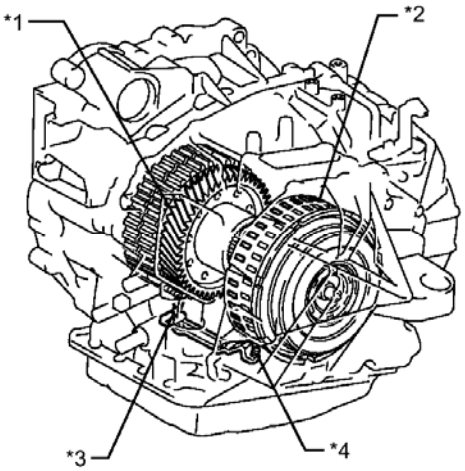

N

Fig. 21: Identifying Counter Gear, Clutch Drum, Input Speed Sensor And Output Speed Sensor
Courtesy of TOYOTA MOTOR SALES, U.S.A., INC.

TEXT IN ILLUSTRATION

*1	Counter Gear	*2	Clutch Drum
*3	Output Speed Sensor (NC)	*4	Input Speed Sensor (NT)

DTC No.	DTC Detection Condition	Trouble Area
P0715	When the speed sensor input voltage is either more than 1.9 V or less than 0.1 V for 4.5 seconds or more (1 trip detection logic).	
	All conditions below are detected for 5 seconds or more (1 trip detection logic). (a) Gear change is not being	

P0717	performed. (b) Gear position: 2nd, 3rd, 4th, 5th or 6th. (c) T/M output shaft speed: 1000 RPM or more. (d) Park/neutral position switch (NSW and R) is OFF (e) Park/neutral position switch and vehicle speed sensor are in normal operation. (f) T/M input shaft speed: Less than 300 RPM.	• Transmission revolution sensor (Input speed sensor NT) • Transmission wire • TCM

MONITOR DESCRIPTION

The NT terminal of the TCM detects a revolution signal from the input speed sensor (NT). The TCM calculates gear shifts comparing the input speed sensor (NT) with the output speed sensor (NC).

While the vehicle is operating in 2nd, 3rd, 4th, 5th or 6th gear with the shift lever in D, if the input shaft speed is less than 300 rpm*1 although the output shaft speed is more than 1000 RPM, the TCM will turn on the MIL and store the DTC.

*1: Pulse is not output or is irregularly output.

MONITOR STRATEGY

Related DTCs	P0715: Input Speed sensor (NT)/Range check P0717: Input Speed sensor (NT)/Verify pulse input
Required sensors/Components	Input Speed sensor (NT), Output Speed sensor (NC)
Frequency of operation	Continuous
Duration	P0715: 4.5 sec. P0717: 5 sec.
MIL operation	Immediately
Sequence of operation	None

TYPICAL ENABLING CONDITIONS

P0715:

Battery voltage	8 V or more
Ignition switch	ON
Starter	OFF

P0717:

The monitor will run whenever this DTC is not present.	P0746, P0748: Shift solenoid valve SL1 P0776, P0778: Shift solenoid valve SL2 P0796, P0798: Shift solenoid valve SL3 P2808, P2810: Shift solenoid valve SL2
Shift change	Shift change is completed before starting next shift change operation
TCM selected gear	2nd, 3rd, 4th, 5th or 6th
Output shaft speed	1000 RPM or more
Park/neutral position switch	OFF
R switch	OFF
Engine	Running
Transmission range switch fail (P0705)	Not detected
Turbine speed sensor range check fail (P0715)	Not detected
Battery voltage	8 V or more
Ignition switch	ON
Starter	OFF

TYPICAL MALFUNCTION THRESHOLDS

P0715:

Sensor voltage	Less than 0.1 V, or more than 1.9 V

P0717:

Sensor signal speed	Less than 300 RPM

COMPONENT OPERATING RANGE

Input speed sensor (NT)	Turbine speed is equal to engine speed with lock-up ON

WIRING DIAGRAM

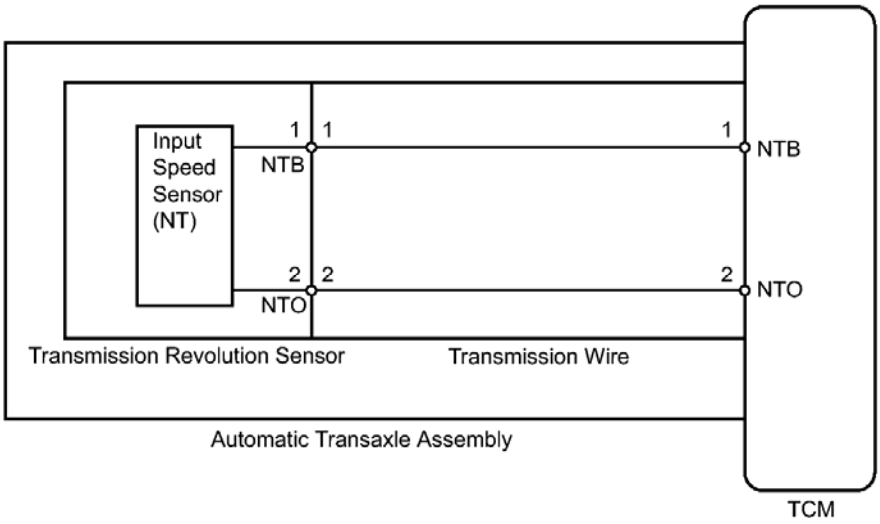

Fig. 22: Input / Turbine Speed Sensor Circuit - Wiring Diagram
Courtesy of TOYOTA MOTOR SALES, U.S.A., INC.

INSPECTION PROCEDURE

NOTE: **Perform the universal trip to clear permanent DTCs. Refer to DTC CHECK / CLEAR .**

HINT:

Using the Techstream to read the Data List allows the values or states of switches, sensors, actuators and other items to be read without removing any parts. This non-intrusive inspection can be very useful because intermittent conditions or signals may be discovered before parts or wiring is disturbed. Reading the Data List information early in troubleshooting is one way to save diagnostic time.

NOTE: **In the table below, the values listed under "Normal Condition" are reference values. Do not depend solely on these reference values when deciding whether a part is faulty or not.**

1. Warm up the engine.
2. Turn the ignition switch off.
3. Connect the Techstream to the DLC3.
4. Turn the ignition switch to ON.
5. Turn the Techstream on.
6. Enter the following menus: Powertrain / ECT / Data List / All Data.
7. According to the display on the Techstream, read the Data List.

ECT

Tester Display	Measurement Item/Range	Normal Condition	Diagnostic Note
SPD (NT)	Input shaft speed/ Min.: 0 RPM Max.: 12750 RPM	Lock-up is • ON (after warming up engine): Input turbine speed (NT) is equal to engine speed • OFF (idling with shift lever in N): Input turbine speed (NT) is nearly equal to engine speed	Data is displayed in increments of 50 RPM

HINT:

- SPD (NT) is always 0 while driving: Open or short in the sensor or circuit.
- SPD (NT) is always more than 0 and less than 300 RPM while driving the vehicle at 50 km/h (31 mph) or more: Sensor trouble, improper installation, or intermittent connection trouble of the circuit.

PROCEDURE

1. **INSPECT TRANSMISSION REVOLUTION SENSOR (SENSOR INSTALLATION)**
   a. Remove the valve body assembly.
   b. Make sure that the connector is properly connected, and check the transmission revolution sensor installation.

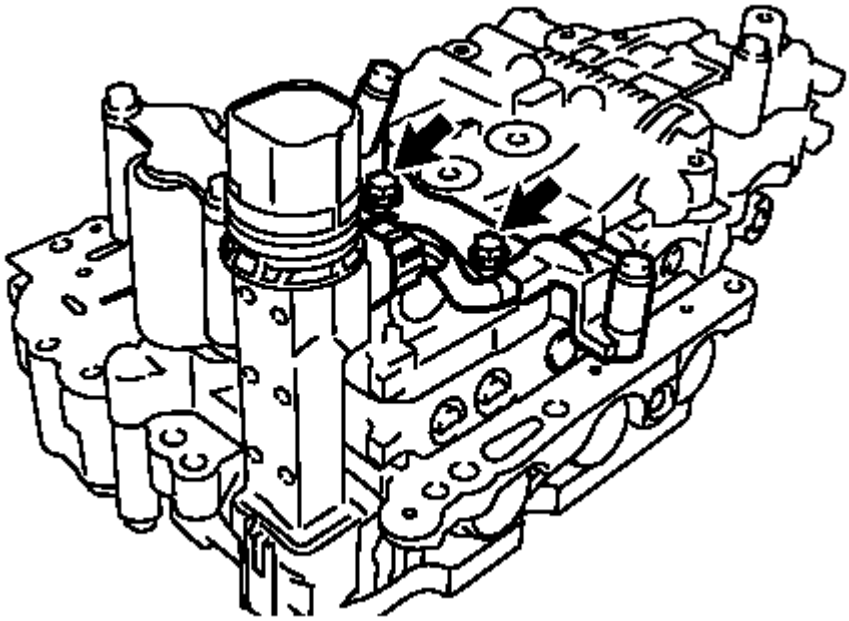

N

Fig. 23: Identifying Speed Sensor Bolts
Courtesy of TOYOTA MOTOR SALES, U.S.A., INC.

OK

The installation bolt is tightened properly and there is no clearance between the sensor and transmission valve body.

NG --> See step 6

OK: Go to next step

2. **INSPECT TRANSMISSION WIRE**
   a. Remove the TCM.

*a

*b

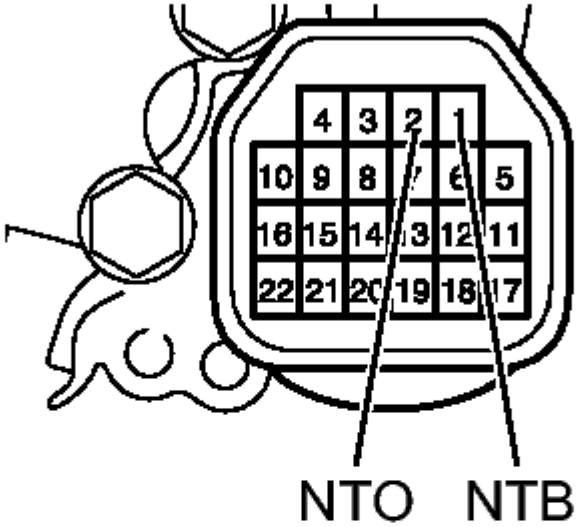

*c

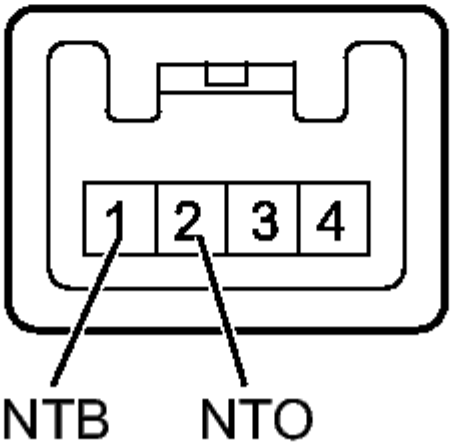

Fig. 24: Measuring Resistance Of Transmission Wire
Courtesy of TOYOTA MOTOR SALES, U.S.A., INC.

b. Disconnect the speed sensor connector from the transmission wire.
c. Measure the resistance according to the value(s) in the table below.

Standard Resistance

Tester Connection	Condition	Specified Condition
1 (NTB) - 1 (NTB)	Always	Below 1 ohms
2 (NTO) - 2 (NTO)	Always	Below 1 ohms
1 (NTB) - Body ground	Always	10 kohms or higher
2 (NTO) - Body ground	Always	10 kohms or higher
1 (NTB) - All other terminals except 2 (NTO)	Always	10 kohms or higher
2 (NTO) - All other terminals except 1 (NTB)	Always	10 kohms or higher

TEXT IN ILLUSTRATION

*a	Component without harness connected: (Transmission Wire)
*b	TCM Side:
*c	Sensor Side:

NG --> See step 7

OK: Go to next step

3. **REPLACE TRANSMISSION REVOLUTION SENSOR**
   a. Replace transmission revolution sensor. Refer to **REMOVAL** .

NEXT: Go to next step

4. **CHECK DTC OUTPUT**

a. Connect the Techstream to the DLC3.
b. Start the engine and turn the Techstream on.
c. Enter the following menus: Powertrain / ECT / Trouble Codes / Clear.

HINT:

Write down the currently output DTCs before clearing them.

d. Perform the monitor drive pattern. Refer to **MONITOR DRIVE PATTERN** .
e. Enter the following menus: Powertrain / ECT / Trouble Code.
f. Read the DTCs using the Techstream.

RESULT

Result	Proceed to
DTC not output	A
P0715 and/or P0717 is output	B

B --> See step 5

A --> END

5. **REPLACE TCM. Refer to REMOVAL**
6. **SECURELY INSTALL OR REPLACE TRANSMISSION REVOLUTION SENSOR. Refer to INSTALLATION**
7. **REPLACE TRANSMISSION WIRE. Refer to REMOVAL**

DTC P0724: BRAKE SWITCH "B" CIRCUIT HIGH

DESCRIPTION

The purpose of this circuit is to prevent the engine from stalling when the brakes are suddenly applied while driving in the lock-up condition.

When the brake pedal is depressed, this switch sends a signal to the TCM. Then the TCM cancels the operation of the lock-up clutch while braking is in progress.

DTC No.	DTC Detection Condition	Trouble Area
	The stop light switch remains ON	

P0724	even when the vehicle is driven in a STOP (less than 3 km/h (1.86 mph)) and GO (30 km/h (18.65 mph) or more) fashion 5 times. (2 trip detection logic).	• Short in stop light switch signal circuit • Stop light switch • TCM

MONITOR DESCRIPTION

This DTC indicates that the stop light switch remains ON. When the stop light switch remains ON during "stop and go" driving, the TCM interprets this as a fault in the stop light switch, illuminates the MIL, and stores the DTC. The vehicle must stop (less than 3 km/h (1.86 mph)) and go (30 km/h (18.65 mph) or more) five times for two consecutive driving cycles in order to set this DTC.

MONITOR STRATEGY

Related DTCs	P0724: Stop light switch/Range check/Rationality
Required sensors/Components	Stop light switch
Frequency of operation	Continuous
Duration	GO and STOP 5 times
MIL operation	2 driving cycles
Sequence of operation	None

TYPICAL ENABLING CONDITIONS

GO and STOP are defined as follows;

THE STOP LIGHT SWITCH REMAINS ON DURING GO AND STOP 5 TIMES.

The monitor will run whenever this DTC is not present.	None
GO: (Vehicle speed is 30 km/h (18.6 mph) or more)	30 km/h (18.65 mph) or more
STOP: (Vehicle speed is less than 3 km/h (1.86 mph))	Less than 3 km/h (1.86 mph)
Starter	OFF
Battery voltage	8 V or more
Ignition switch	ON

TYPICAL MALFUNCTION THRESHOLDS

Switch status	ON stuck

WIRING DIAGRAM

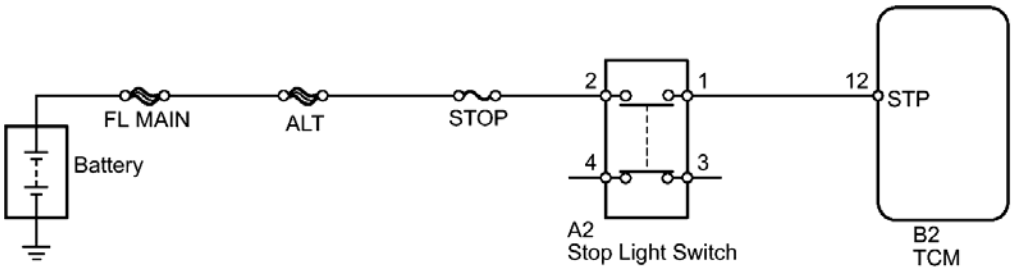

Fig. 25: Brake Switch Circuit - Wiring Diagram
Courtesy of TOYOTA MOTOR SALES, U.S.A., INC.

INSPECTION PROCEDURE

NOTE:

- **Inspect the fuses for circuits related to this system before performing the following inspection procedure.**
- **Perform the universal trip to clear permanent DTCs. Refer to DTC CHECK / CLEAR .**

1. **DATA LIST**

HINT:

Using the Techstream to read the Data List allows the values or states of switches, sensors, actuators and other items to be read without removing any parts. This non-intrusive inspection can be very useful because intermittent conditions or signals may be discovered before parts or wiring is disturbed. Reading the Data List information early in troubleshooting is one way to save diagnostic time.

NOTE: **In the table below, the values listed under "Normal Condition" are reference values. Do not depend solely on these reference values when deciding whether a part is faulty or not.**

a. Warm up the engine.
b. Turn the ignition switch off.
c. Connect the Techstream to the DLC3.
d. Turn the ignition switch to ON.
e. Turn the Techstream on.
f. Enter the following menus: Powertrain / ECT / Data List / All Data.
g. According to the display on the Techstream, read the Data List.

ECT

Tester Display	Measurement Item/Range	Normal Condition	Diagnostic Note
Stop Light Switch	Stop light switch status/ ON or OFF	Brake pedal: • Depressed: ON • Released: OFF	-

PROCEDURE

1. **INSPECT STOP LIGHT SWITCH**
   a. Remove the stop light switch.

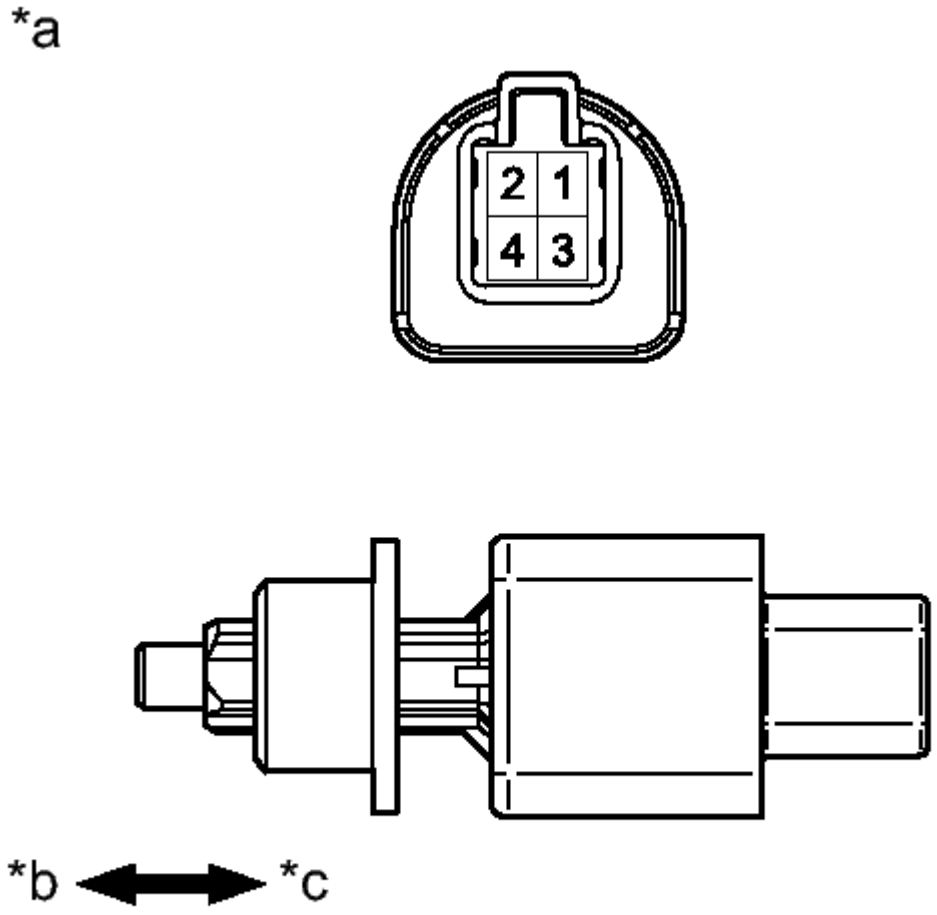

Fig. 26: Inspecting Stop Light Switch

Courtesy of TOYOTA MOTOR SALES, U.S.A., INC.

b. Measure the resistance according to the value(s) in the table below.

Standard Resistance

Tester Connection	Switch Condition	Specified Condition
1 - 2	Pin not pushed	Below 1 ohms
	Pin pushed	10 kohms or higher
3 - 4	Pin pushed	Below 1 ohms
	Pin not pushed	10 kohms or higher

TEXT IN ILLUSTRATION

*a	Component without harness connected: (Stop Light Switch)
*b	Free
*c	Pushed in

NG --> See step 4

OK: Go to next step

2. **CHECK HARNESS AND CONNECTOR (STOP LIGHT SWITCH - TCM)**
   a. Install the stop light switch.

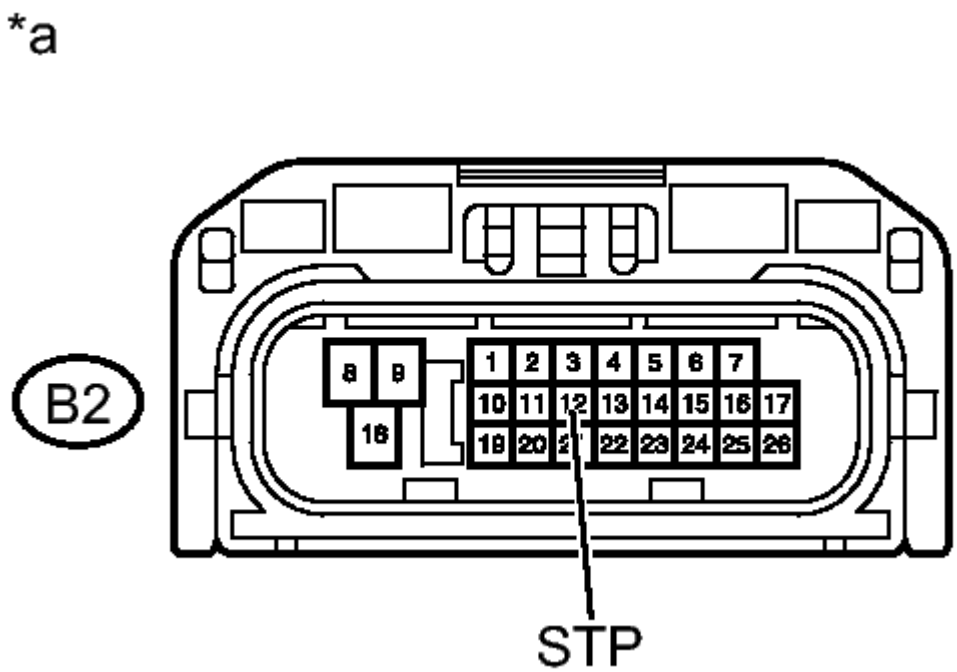

Fig. 27: Checking Harness And Connector (Stop Light Switch - TCM)
Courtesy of TOYOTA MOTOR SALES, U.S.A., INC.

b. Connect the stop light switch connector.
c. Disconnect the TCM connector.
d. Measure the voltage according to the value(s) in the table below.

Standard Voltage

Tester Connection	Condition	Specified Condition
B2-12 (STP) - Body ground	Brake pedal is depressed	7.5 to 14 V
	Brake pedal is released	Below 1 V

TEXT IN ILLUSTRATION

*a	Front view of wire harness connector: (to TCM)

NG --> REPAIR OR REPLACE HARNESS OR CONNECTOR

OK --> See step 3

3. **REPLACE TCM. Refer to REMOVAL**
4. **REPLACE STOP LIGHT SWITCH. Refer to REMOVAL**

DTC P0741: TORQUE CONVERTER CLUTCH SOLENOID PERFORMANCE (SHIFT SOLENOID VALVE SL)

DESCRIPTION

The TCM uses signals from the throttle position sensor, air-flow meter, input speed sensor, output speed sensor and crankshaft position sensor to help determine the engagement timing of the lock-up clutch. The TCM monitors the engagement of the clutch using the input speed sensor, output speed sensor and crankshaft position sensor.

Then the TCM compares the engagement condition of the lock-up clutch with the lock-up schedule in the TCM memory to detect shift solenoid valve SL, valve body and torque converter assembly mechanical problems.

DTC No.	DTC Detection Condition	Trouble Area
P0741	When both of the following are detected (2 trip detection logic): • Lock-up does not occur when requested. • Transmission fluid pressure switch No. 3 is ON.	• Shift solenoid valve SL remains closed • Valve body is blocked • Torque converter assembly • Automatic transaxle (clutch, brake or gear etc.) • Transmission wire • Line pressure is too low

MONITOR DESCRIPTION

Torque converter lock-up is controlled by the TCM based on the input speed (NT), output speed (NC), engine speed (NE), engine load, engine temperature, vehicle speed, automatic transmission fluid (ATF) temperature, and gear selection. The TCM determines the lock-up status of the torque converter by comparing the engine speed (NE) to the input speed (NT). The TCM calculates the actual transmission gear by comparing the input speed (NT) to the output speed (NC). When conditions are appropriate, the TCM requests "lock-up" by applying control voltage to shift solenoid SL. When SL is turned on, it applies pressure to the lock-up relay valve and locks the torque converter assembly.

If the TCM detects no lock-up after lock-up has been requested or if it detects lock-up when it is not requested, the TCM interprets this as a fault in shift solenoid valve SL or lock-up system performance. The TCM will turn on the MIL and store the DTC.

HINT:

Example:

When the following is met, the system judges it as a malfunction.

- There is a difference in rotation (speed) between the input side (engine speed) and output side (input turbine speed) of the torque converter when the TCM commands lock-up.

  (Engine speed is at least 70 RPM greater than the input turbine speed.)

MONITOR STRATEGY

Related DTCs	P0741: Shift solenoid valve SL OFF malfunction Shift solenoid valve SL ON malfunction
Required sensors/Components	Shift solenoid valve SL, Input speed sensor (NT), Output speed sensor (NC), Crankshaft position sensor (NE), Throttle position sensor (VPA1), Mass air flow sensor (MAF), Transmission temperature sensor (THO1), Engine coolant temperature sensor (ECT)
Frequency of operation	Continuous
Duration	OFF malfunction 3.5 seconds
MIL operation	2 driving cycles
Sequence of operation	None

TYPICAL ENABLING CONDITIONS

ALL:

The monitor will run whenever this DTC is not present. (Not circuit malfunction)	P0712, P0713 (ATF temperature sensor circuit (TFT sensor)) P0115, P0117, P0118 (ECT sensor circuit) P0715, P0717 (Input speed sensor (NT) circuit) P0791, P0793 (Output speed sensor (NC) circuit) P0748 (Shift solenoid valve SL1 circuit) P0778 (Shift solenoid valve SL2 circuit) P0798 (Shift solenoid valve SL3 circuit) P2810 (Shift solenoid valve SL4 circuit) P2759 (Shift solenoid valve SLU circuit) P2769, P2770 (Shift solenoid valve SL circuit) P0327, P0328, P0332, P0333 (KCS sensor circuit) P0120, P0121, P0122, P0123, P0220, P0222, P0223, P0604, P0606, P060A, P060B, P060D, P060E, P0657, P1607, P2102, P2103, P2111, P2112, P2118, P2119, P2135 ((ETCS) Electronic throttle control system)

	U0100 (CAN communication system)
Engine coolant temperature	40°C (104°F) or more
Spark advance from Max. retard timing by KCS control	0°CA or more
Transmission range	D
TFT (Transmission fluid temperature)	-10°C (14°F) or more
TFT (Transmission fluid temperature) sensor circuit	No circuit malfunction
ECT (Engine coolant temperature) sensor circuit	No circuit malfunction
Input speed sensor (NT) circuit	No circuit malfunction
Output speed sensor (NC) circuit	No circuit malfunction
Shift solenoid valve SL1 circuit	No circuit malfunction
Shift solenoid valve SL2 circuit	No circuit malfunction
Shift solenoid valve SL3 circuit	No circuit malfunction
Shift solenoid valve SL4 circuit	No circuit malfunction
Shift solenoid valve SLU circuit	No circuit malfunction
Shift solenoid valve SL circuit	No circuit malfunction
KCS (Knock control sensor circuit)	No circuit malfunction
(ETCS) Electronic throttle control system	Not system down
CAN communication system	Not system down
Engine	Starting
TCM selected gear	Not 1st
Vehicle speed	25 km/h (15.5 mph) or more
Input speed (NT) / Output speed (NO) with 1st	3.304 to 7.724
Input speed (NT) / Output speed (NO) with 2nd	1.901 to 2.340
Input speed (NT) / Output speed (NO) with 3rd	1.399 to 1.649
Input speed (NT) / Output speed (NO) with 4th	0.998 to 1.138
Input speed (NT) / Output speed (NO) with 5th	0.705 to 0.836
Input speed (NT) / Output speed (NO) with 6th	0.568 to 0.695

TYPICAL MALFUNCTION THRESHOLDS

OFF MALFUNCTION:

Following conditions are met	(a) and (b)
(a) Engine Speed (NE) - Input speed (NT)	70 RPM or more
(b) Transmission fluid pressure switch	ON

INSPECTION PROCEDURE

NOTE: **Perform the universal trip to clear permanent DTCs. Refer to DTC CHECK / CLEAR .**

HINT:

Using the Techstream to perform Active Tests allows relays, VSVs, actuators and other items to be operated without removing any parts. This non-intrusive functional inspection can be very useful because intermittent operation may be discovered before parts or wiring is disturbed. Performing Active Tests early in troubleshooting is one way to save diagnostic time. Data List information can be displayed while performing Active Tests.

1. **PERFORM ACTIVE TEST**
   a. Warm up the engine.
   b. Turn the ignition switch off.
   c. Connect the Techstream to the DLC3.
   d. Turn the ignition switch to ON.
   e. Turn the Techstream on.
   f. Enter the following menus: Powertrain / ECT / Active Test.
   g. According to the display on the Techstream, perform the Active Test.

ECT

Tester Display	Test Part	Control Range	Diagnostic Note
Activate the Lock Up	Controls the shift solenoid SLU and SL to set the automatic transaxle to the lock-up condition.	ON/OFF	Can be used to check SLU and SL solenoid operation [Vehicle Condition] Vehicle speed: 60 km/h (37 mph) or more

HINT:

This test can be conducted when the vehicle speed is 60 km/h (37 mph) or more.

   h. Lightly depress the accelerator pedal and check that the engine speed does not change abruptly.

HINT:

- When changing the accelerator pedal opening angle while driving, if the engine speed does not change, lock-up is on.
- Slowly release, but not fully, the accelerator pedal in order to decelerate. (Fully releasing the

pedal will close the throttle valve and lock-up may be turned off.)

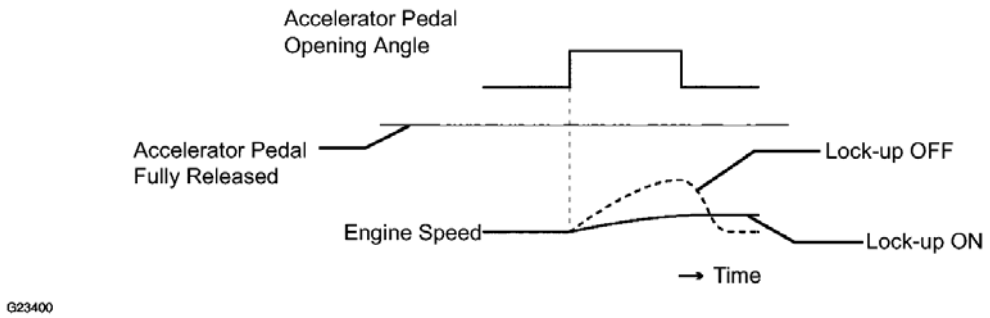

Fig. 28: Accelerator Pedal Opening Angle Graph
Courtesy of TOYOTA MOTOR SALES, U.S.A., INC.

PROCEDURE

1. **CHECK OTHER DTCS OUTPUT (IN ADDITION TO DTC P0741)**
   a. Connect the Techstream to the DLC3.
   b. Turn the ignition switch to ON.
   c. Turn the Techstream on.
   d. Enter the following menus: Powertrain / ECT / Trouble Codes.
   e. Read the DTCs using the Techstream.

   RESULT

Result	Proceed to
Only P0741 is output	A
P0741 and other DTCs output	B

   HINT:

   If any other codes besides P0741 are output, perform the troubleshooting for those DTCs first.

B --> See step 8

A: Go to next step

2. **INSPECT TRANSMISSION WIRE (SHIFT SOLENOID VALVE SL)**
   a. Remove the TCM from the transaxle.

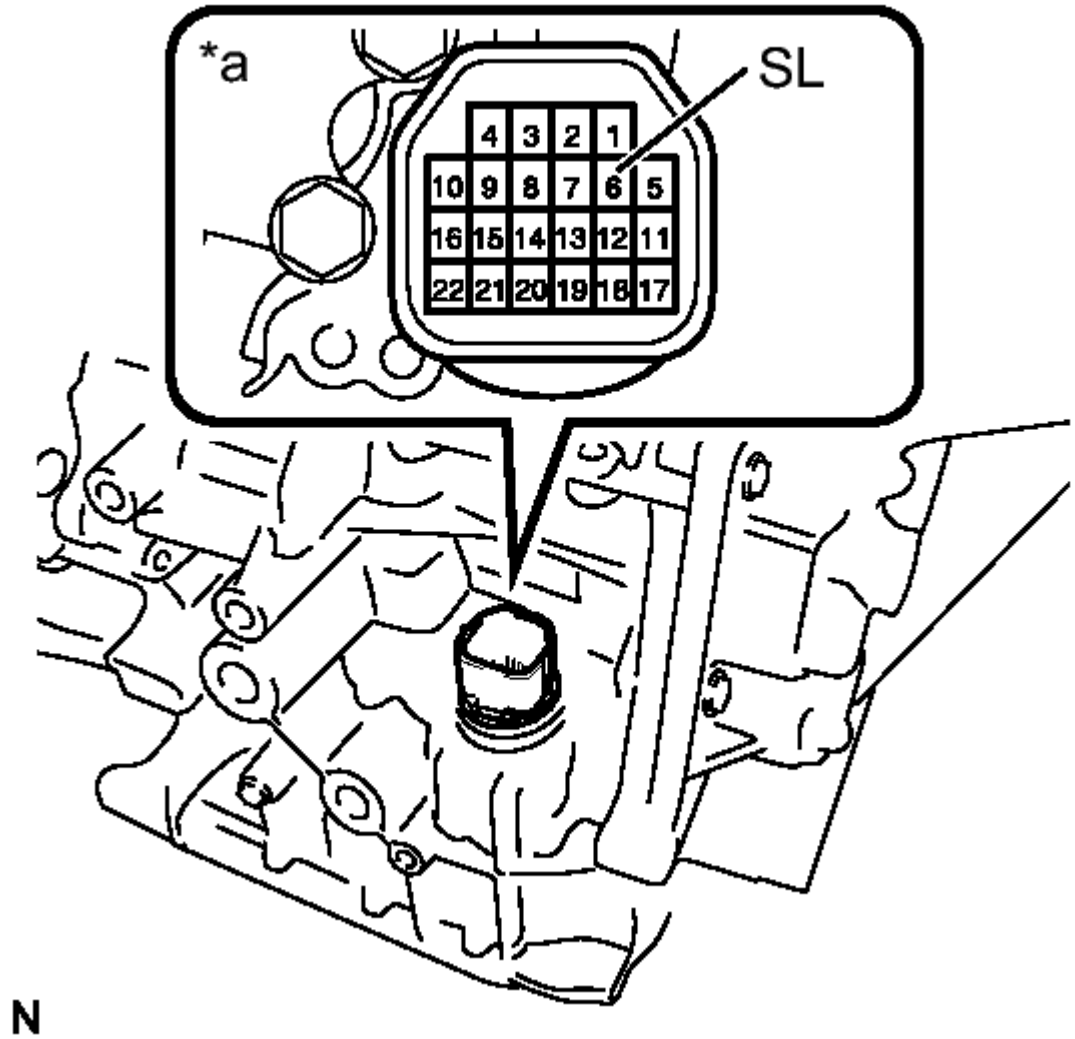

Fig. 29: Inspecting Transmission Wire (Shift Solenoid Valve SL)
Courtesy of TOYOTA MOTOR SALES, U.S.A., INC.

   b. Measure the resistance according to the value(s) in the table below.

   Standard Resistance

Tester Connection	Condition	Specified Condition
6 (SL) -	20°C (68°	11 to 15

Body ground	F)	ohms

TEXT IN ILLUSTRATION

*a	Component without harness connected: (Transmission Wire)

NG --> See step 6

OK: Go to next step

3. **INSPECT SHIFT SOLENOID VALVE SL (OPERATION)**
   a. Remove shift solenoid valve SL.

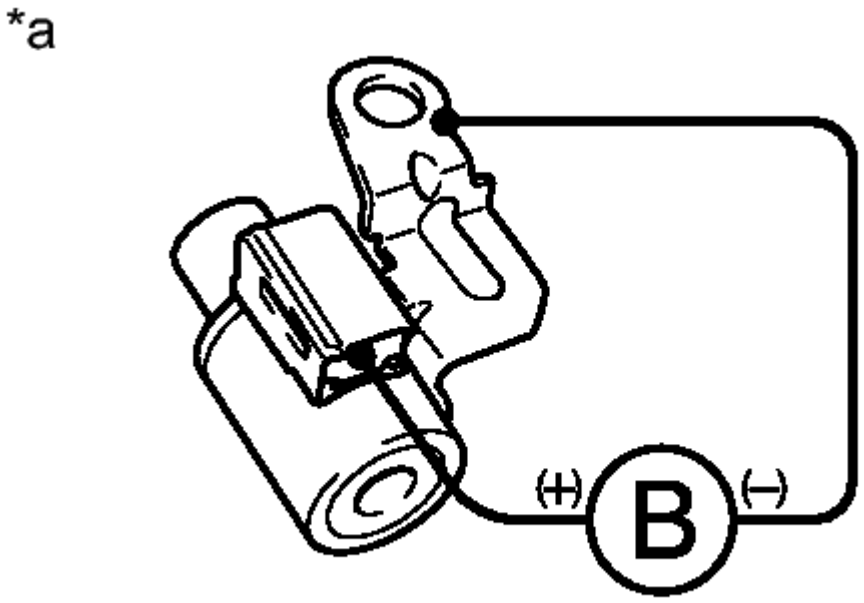

Fig. 30: Inspecting Shift Solenoid Valve SL (Operation)
Courtesy of TOYOTA MOTOR SALES, U.S.A., INC.

   b. Connect a battery positive (+) lead to the terminal of the solenoid valve connector, and a negative (-) lead to the solenoid body. Then check that the valve moves and makes an operating sound.

   OK

   Valve moves and makes an operating sound.

TEXT IN ILLUSTRATION

*a	Component without harness connected: (Shift Solenoid Valve SL)

NG --> See step 9

OK: Go to next step

4. **INSPECT TRANSMISSION VALVE BODY ASSEMBLY**
   a. Check the transmission valve body assembly. Refer to **REMOVAL** .

      OK

      There are no foreign objects on each valve and they operate smoothly.

NG --> See step 12

OK: Go to next step

5. **INSPECT TORQUE CONVERTER ASSEMBLY**
   a. Check the torque converter assembly. Refer to **INSPECTION** .

      OK

      The torque converter assembly operates normally.

NG --> See step 11

OK --> See step 7

6. **INSPECT SHIFT SOLENOID VALVE SL (RESISTANCE)**
   a. Remove shift solenoid valve SL.

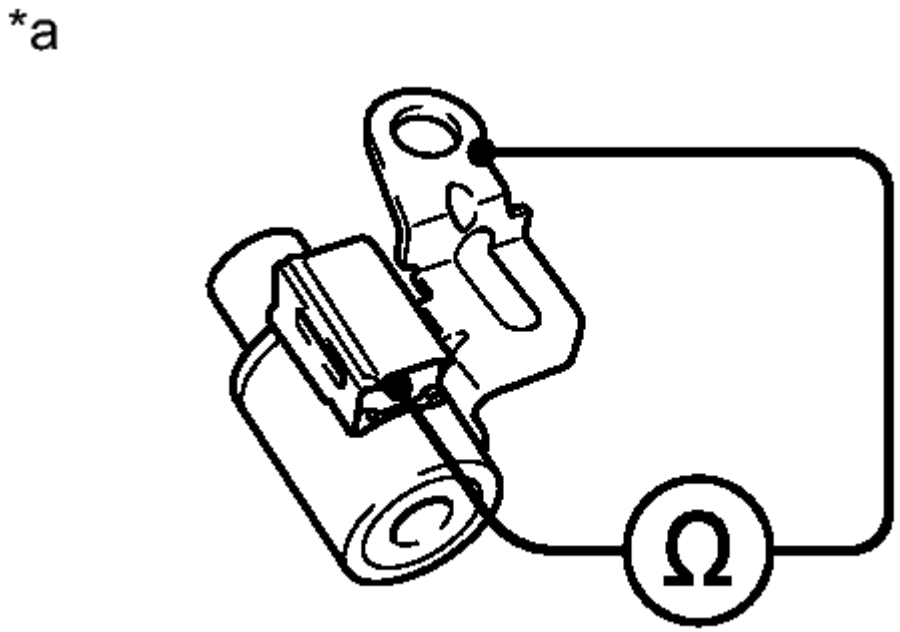

Fig. 31: Inspecting Shift Solenoid Valve SL (Resistance)
Courtesy of TOYOTA MOTOR SALES, U.S.A., INC.

b. Measure the resistance according to the value(s) in the table below.

Standard Resistance

Tester Connection	Condition	Specified Condition
1 - Solenoid Body	20°C (68°F)	11 to 15 ohms

TEXT IN ILLUSTRATION

*a	Component without harness connected: (Shift Solenoid Valve SL)

NG --> See step 9

OK --> See step 10

7. **REPLACE AUTOMATIC TRANSAXLE ASSEMBLY. Refer to REMOVAL**

8. **GO TO DTC CHART. Refer to DIAGNOSTIC TROUBLE CODE CHART**
9. **REPLACE SHIFT SOLENOID VALVE SL. Refer to REMOVAL**
10. **REPLACE TRANSMISSION WIRE. Refer to REMOVAL**
11. **REPLACE TORQUE CONVERTER ASSEMBLY. Refer to REMOVAL**
12. **REPAIR OR REPLACE TRANSMISSION VALVE BODY ASSEMBLY. Refer to REMOVAL**

DTC P0746: PRESSURE CONTROL SOLENOID "A" PERFORMANCE (SHIFT SOLENOID VALVE SL1)

DESCRIPTION

The TCM uses the vehicle speed signal and signals from the transmission speed sensors (NC, NT) to detect the actual gear (1st, 2nd, 3rd, 4th, 5th or 6th gear).

Then the TCM compares the actual gear with the shift schedule in the TCM memory to detect mechanical problems of the shift solenoid valves and valve body.

DTC No.	DTC Detection Condition	Trouble Area
P0746	The engine revs freely when 1st, 2nd, 3rd, or 4th gear is commanded (2 trip detection logic). When either of the following is detected twice (2 trip detection logic): • When 5th gear is commanded, 4th gear is engaged. • When 6th gear is commanded, 4th gear is engaged	• Shift solenoid valve SL1 remains open or closed • Valve body is blocked • Automatic transaxle (clutch, brake or gear etc.)

MONITOR DESCRIPTION

The TCM commands gear shifts by turning the shift solenoid valves on and off. According to the engine speed (NE), input speed (NT) and output speed (NC), the TCM detects the actual gear (1st, 2nd, 3rd, 4th, 5th or 6th gear). When the gear commanded by the TCM and the actual gear are not the same, the TCM will turn on the MIL and store the DTC.

MONITOR STRATEGY

Related DTCs	P0746: Shift solenoid valve SL1 OFF malfunction Shift solenoid valve SL1 ON malfunction
Required sensors/Components	Shift solenoid valve SL1, Input speed sensor (NT), Output speed sensor (NC), Crankshaft position sensor (NE)

Frequency of operation	Continuous
Duration	ON malfunction: 0.8 seconds OFF malfunction: 0.5 seconds
MIL operation	2 driving cycles
Sequence of operation	None

TYPICAL ENABLING CONDITIONS

ALL:

The monitor will run whenever this DTC is not present. (Not circuit malfunction)	P0712, P0713 (ATF temperature sensor circuit (TFT sensor)) P0115, P0117, P0118 (ECT sensor circuit) P0715, P0717 (Input speed sensor (NT) circuit) P0791, P0793 (Output speed sensor (NC) circuit) P0748 (Shift solenoid valve SL1 circuit) P0778 (Shift solenoid valve SL2 circuit) P0798 (Shift solenoid valve SL3 circuit) P2810 (Shift solenoid valve SL4 circuit) P0327, P0328, P0332, P0333 (KCS sensor circuit) P0120, P0121, P0122, P0123, P0220, P0222, P0223, P0604, P0606, P060A, P060B, P060D, P060E, P0657, P1607, P2102, P2103, P2111, P2112, P2118, P2119, P2135 ((ETCS) Electronic throttle control system) U0100 (CAN communication system)
Transmission range	D
TFT (Transmission fluid temperature)	-10°C (14°F) or more
TFT (Transmission fluid temperature) sensor circuit	No circuit malfunction
ECT (Engine coolant temperature) sensor circuit	No circuit malfunction
Input speed sensor (NT) circuit	No circuit malfunction
Output speed sensor (NC) circuit	No circuit malfunction
Shift solenoid valve SL1 circuit	No circuit malfunction
Shift solenoid valve SL2 circuit	No circuit malfunction
Shift solenoid valve SL3 circuit	No circuit malfunction
Shift solenoid valve SL4 circuit	No circuit malfunction
KCS (Knock control sensor circuit)	No circuit malfunction
(ETCS) Electronic throttle control system	Not system down
CAN communication system	Not system down
Engine	Starting

OFF MALFUNCTION:

TCM selected gear	1st, 2nd, 3rd or 4th
TCM indicated pressure value of SL1	1200 kPa
Throttle valve opening angle	3% or more

ON MALFUNCTION:

TCM selected gear	5th or 6th
Vehicle speed	2 km/h (1.2 mph) or more
Engine coolant temperature	40°C (104°F) or more
Throttle valve opening angle	4.5% or more at engine speed 2000 RPM (Varies with engine speed)

TYPICAL MALFUNCTION THRESHOLDS

Either of the following conditions is met:

OFF MALFUNCTION:

Input speed (NT) - Output speed (NC) x Gear ratio	1000 RPM or more

ON MALFUNCTION:

Input speed (NT) / Output speed (NC) when output speed less than 1000 RPM	0.998 to 1.138

INSPECTION PROCEDURE

NOTE: **Perform the universal trip to clear permanent DTCs. Refer to DTC CHECK / CLEAR .**

PROCEDURE

1. **CHECK OTHER DTCS OUTPUT (IN ADDITION TO DTC P0746)**
   a. Connect the Techstream to the DLC3.

b. Turn the ignition switch to ON.
c. Turn the Techstream on.
d. Enter the following menus: Powertrain / ECT / Trouble Codes.
e. Read the DTCs using the Techstream.

RESULT

Result	Proceed to
P0746 and other DTCs are output	A
Only P0746 is output	B

HINT:

If a solenoid is stuck OFF, DTCs for several solenoids including the malfunctioning solenoid will be detected.

B --> See step 3

A: Go to next step

2. **PERFORM ACTIVE TEST USING TECHSTREAM (CONTROL THE SHIFT POSITION)**

NOTE: This test should always be performed with at least 2 people.

a. Warm up the engine.
b. Turn the ignition switch off.
c. Connect the Techstream to the DLC3.
d. Turn the ignition switch to ON.
e. Turn the Techstream on.
f. Enter the following menus: Powertrain / ECT / Active Test.
g. According to the display on the Techstream, perform the Active Test.

HINT:

Comparing the gear commanded by the Active Test with the actual gear enables confirmation of the problem. Refer to **FAIL-SAFE CHART** .

ECT

Tester Display	Test Part	Control Range	Diagnostic Note
Control the Shift Position	Operates the shift solenoid valves to allow gears to selected manually.	• Press "-->" button: Upshift occurs • Press "<--" button: Downshift occurs	Can be used to check the operation of the shift solenoid valves.

NOTE:

- **This test can be conducted when the vehicle is stopped.**
- **When shifting gears using the Active Test function, do not operate the accelerator pedal for 2 seconds before and after shifting gears.**

HINT:

The gear commanded by the TCM is shown in the Data List / Shift Status display on the Techstream.

h. Check the vehicle speed and the gear when the engine speed is 1000 RPM.

HINT:

Because the torque converter clutch has not engaged, it may be difficult to obtain the speeds specified in 4th, 5th, and 6th gear, however a difference of speed should still be evident following each gear change.

Standard

1st	2nd	3rd	4th	5th	6th
8 to 12 km/h (5 to 7.5 mph)	15 to 19 km/h (9.3 to 11.8 mph)	21 to 25 km/h (13.0 to 15.5 mph)	31 to 35 km/h (19.3 to 21.7 mph)	44 to 48 km/h (27.3 to 29.8 mph)	52 to 56 km/h (32.3 to 34.8 mph)

i. Compare the TCM commanded gear and the actual gear.

RESULT

Actuator Gear	TCM Commanded Gear						

during Malfunction		1st	2nd	3rd	4th	5th	6th	Proceed to
Shift solenoid SL1	Stuck ON	1st	2nd	3rd	4th	4th	4th	A
	Stuck OFF	N*1	N*1	N*1	N*1	5th	6th	
Shift solenoid SL2	Stuck ON	4th	4th	4th	4th	5th	6th	B
	Stuck OFF	1st	2nd	3rd	1st	N*1	N*1	
Shift solenoid SL3	Stuck ON	2nd	2nd	3rd	4th	5th	6th	C
	Stuck OFF	1st	1st	3rd	4th	5th	N*1	
Shift solenoid SL4	Stuck ON*3	3rd	3rd	3rd	4th	5th	5th	D
	Stuck OFF	1st	2nd	1st	4th	N*1	6th	
Shift solenoid SLT	Stuck ON	N*2	N*2	N*2	N*2	N*2	N*2	E
	Stuck OFF*3	1st	2nd	3rd	4th	5th	6th	

HINT:

- *1: Neutral
- *2: If shift solenoid SLT is stuck on, the line pressure will be low. Therefore, the amount of torque that can be transmitted by each gear is lower than the normal limit. When the engine power exceeds this lowered limit, the engine speed will increase freely.
- *3: When shift solenoid SLT is stuck off, gear shifting is normal.

B --> See step 8

C --> See step 9

D --> See step 10

E --> See step 11

A: Go to next step

3. **INSPECT SHIFT SOLENOID VALVE SL1**
   a. Remove shift solenoid valve SL1.

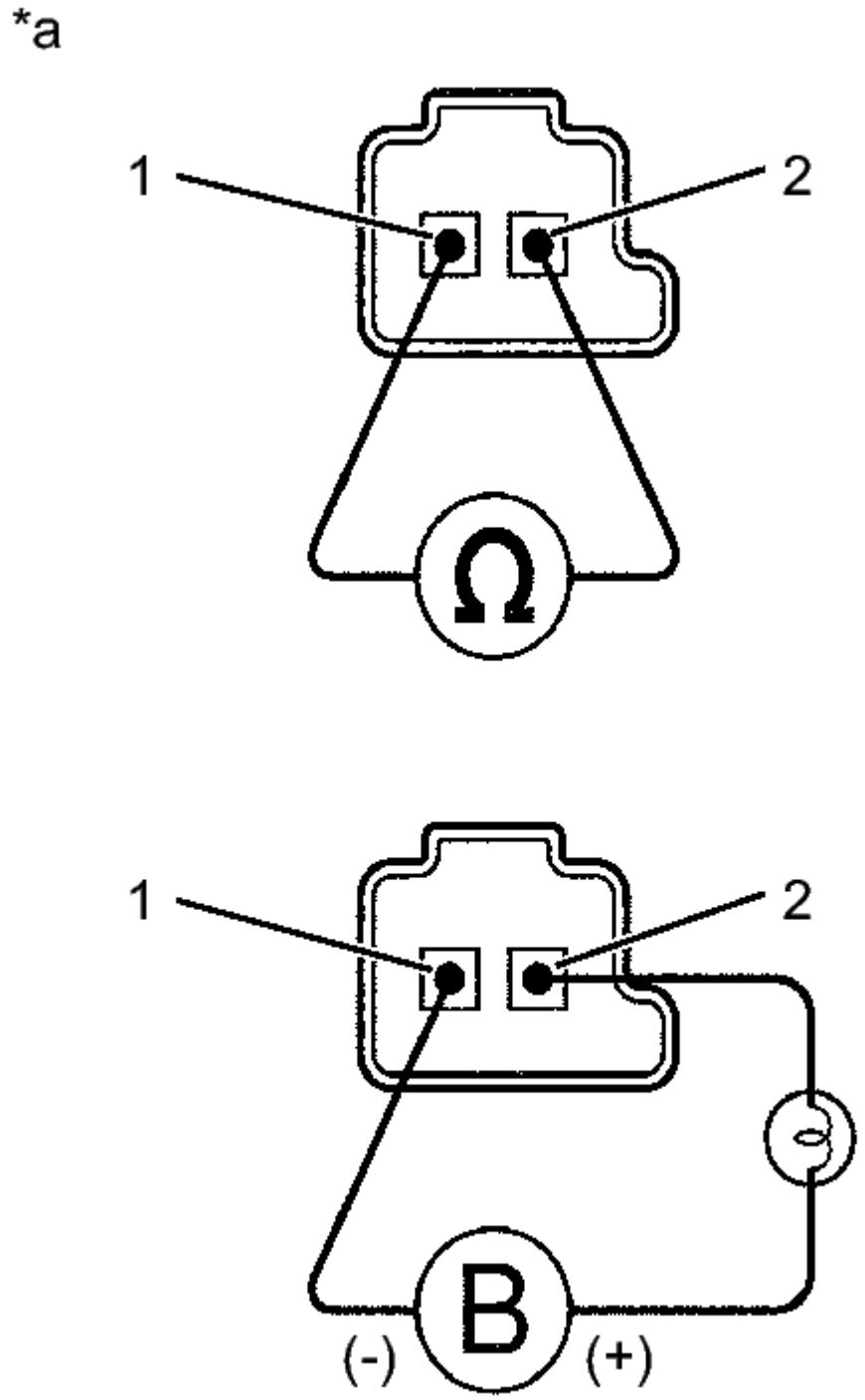

Fig. 32: Measuring Resistance Of Shift Solenoid Valve
Courtesy of TOYOTA MOTOR SALES, U.S.A., INC.

b. Measure the resistance according to the value(s) in the table below.

Standard Resistance

Tester Connection	Condition	Specified Condition
1 - 2	20°C (68° F)	5.0 to 5.6 ohms

TEXT IN ILLUSTRATION

*a	Component without harness connected: (Shift Solenoid Valve SL1)

c. Connect a battery positive (+) lead with a 21 W bulb to terminal 2 and a negative (-) lead to terminal 1 of the solenoid valve connector. Then check that the valve moves and makes an operating sound.

OK

Valve moves and makes an operating sound.

NG --> See step 6

OK: Go to next step

4. **INSPECT TRANSMISSION VALVE BODY ASSEMBLY**
   a. Check the transmission valve body assembly. Refer to **REMOVAL** .

OK

There are no foreign objects on each valve and they operate smoothly.

NG --> See step 7

OK --> See step 5

5. **REPLACE AUTOMATIC TRANSAXLE ASSEMBLY. Refer to REMOVAL**
6. **REPLACE SHIFT SOLENOID VALVE SL1. Refer to REMOVAL**
7. **REPAIR OR REPLACE TRANSMISSION VALVE BODY ASSEMBLY. Refer to REMOVAL**
8. **GO TO DTC CHART (RELATED SHIFT SOLENOID VALVE (SL2) PERFORMANCE DTC P0776). Refer to DTC P0776: Pressure Control Solenoid "B" Performance (Shift Solenoid Valve SL2)**

9. **GO TO DTC CHART (RELATED SHIFT SOLENOID VALVE (SL3) PERFORMANCE DTC P0796). Refer to DTC P0796: Pressure Control Solenoid "C" Performance (Shift Solenoid Valve SL3)**
10. **GO TO DTC CHART (RELATED SHIFT SOLENOID VALVE (SL4) PERFORMANCE DTC P2808). Refer to DTC P2808: Pressure Control Solenoid "G" Performance (Shift Solenoid Valve SL4)**
11. **GO TO DTC CHART (RELATED SHIFT SOLENOID VALVE (SLT) PERFORMANCE DTC P2714). Refer to DTC P2714: Pressure Control Solenoid "D" Performance (Shift Solenoid Valve SLT)**

DTC P0748: PRESSURE CONTROL SOLENOID "A" ELECTRICAL (SHIFT SOLENOID VALVE SL1)

DESCRIPTION

Changing from 1st to 6th is performed by the TCM turning shift solenoid valves SL1, SL2, SL3, SL4 and SL on and off. If an open or short circuit occurs in any of the shift solenoid valves, the TCM controls the remaining normal shift solenoid valves to allow the vehicle to be operated. Refer to **FAIL-SAFE CHART** .

DTC No.	DTC Detection Condition	Trouble Area
P0748	The TCM checks for an open or short in the shift solenoid valve SL1 circuit while driving and shifting between 4th and 5th gears. (1 trip detection logic) • Output signal duty equals 100%. (NOTE: SL1 output signal duty is less than 100% under normal condition.)	• Open or short in shift solenoid valve SL1 circuit • Shift solenoid valve SL1 • Transmission wire • TCM

MONITOR DESCRIPTION

This DTC indicates an open or short in the shift solenoid valve SL1 circuit. The TCM commands gear shifts by turning the shift solenoid valves on or off. When there is an open or short circuit in any shift solenoid valve circuit, the TCM detects the problem and illuminates the MIL and stores the DTC. The TCM also performs the fail-safe function and turns the other normal shift solenoid valves on or off. (In case of an open or short circuit, the TCM stops sending current to the circuit.)

While driving and shifting between 4th and 5th gears, if the TCM detects an open or short in the shift solenoid valve SL1 circuit, the TCM determines there is a malfunction. Refer to **FAIL-SAFE CHART** .

MONITOR STRATEGY

Related DTCs	P0748: Shift solenoid valve SL1/Range check

Required sensors/Components	Shift solenoid valve SL1
Frequency of operation	Continuous
Duration	1 second
MIL operation	Immediately
Sequence of operation	None

TYPICAL ENABLING CONDITIONS

ALL

The monitor will run whenever the following DTCs are not present	None
Ignition switch	ON
Starter	OFF

CONDITION (A)

Battery voltage	12 V or more

CONDITION (B)

Battery voltage	10 V or more and less than 12 V
CPU commanded duty	Less than 75%

TYPICAL MALFUNCTION THRESHOLDS

ALL

Output signal duty	100% or more

COMPONENT OPERATING RANGE

Output signal duty	More than 3% and less than 100%

WIRING DIAGRAM

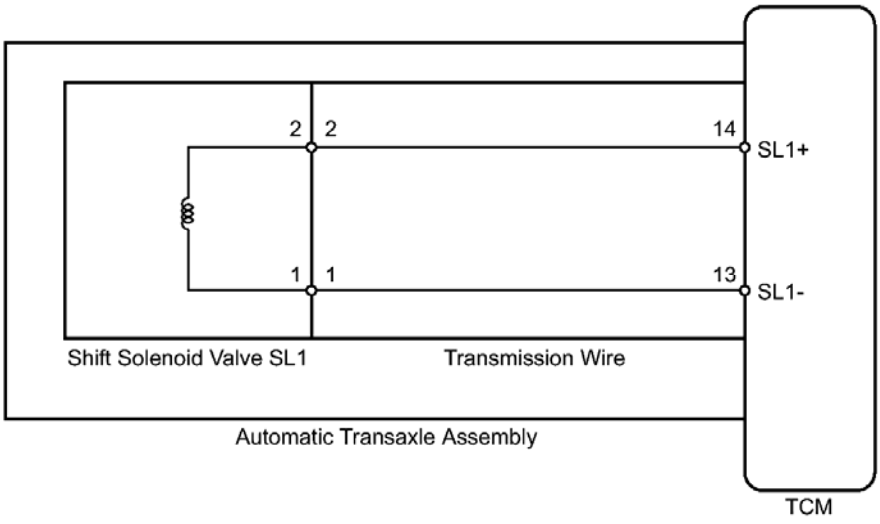

Fig. 33: Shift Solenoid Valve SL1 Circuit - Wiring Diagram
Courtesy of TOYOTA MOTOR SALES, U.S.A., INC.

INSPECTION PROCEDURE

NOTE: **Perform the universal trip to clear permanent DTCs. Refer to DTC CHECK / CLEAR .**

HINT:

The following table shows normal operation of the shift solenoid valve SL1 when the shift lever is in D:

TCM commanded gear	1st	2nd	3rd	4th	5th	6th
Shift solenoid valve SL1	ON	ON	ON	ON	OFF	OFF

PROCEDURE

1. **INSPECT TRANSMISSION WIRE (SHIFT SOLENOID VALVE SL1)**
   a. Remove the TCM from the transaxle.

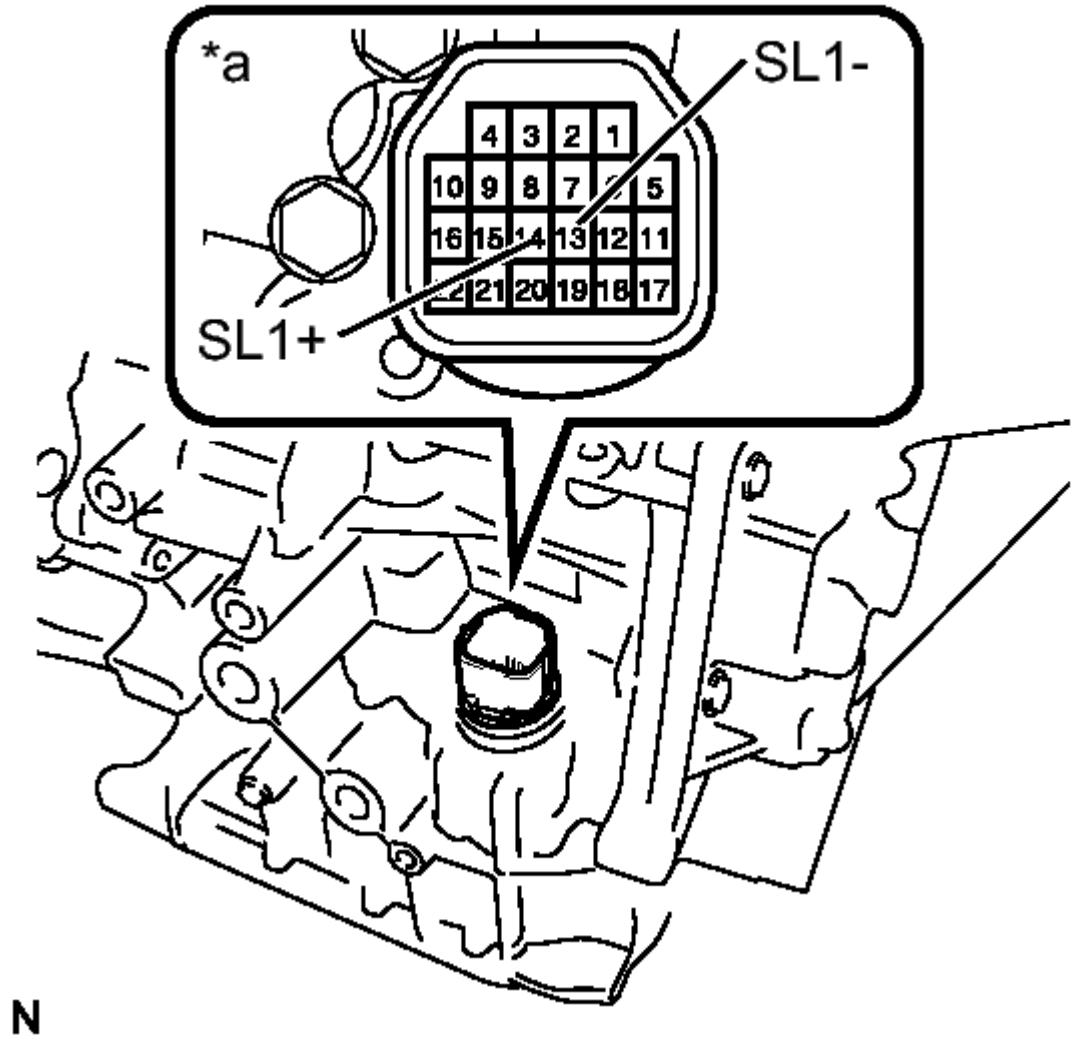

Fig. 34: Inspecting Transmission Wire (Shift Solenoid Valve SL1)
Courtesy of TOYOTA MOTOR SALES, U.S.A., INC.

b. Measure the resistance according to the value(s) in the table below.

Standard Resistance

Tester Connection	Condition	Specified Condition
14 (SL1+) - 13 (SL1-)	20°C (68° F)	5.0 to 5.6 ohms
14 (SL1+) - Body ground	Always	10 kohms or higher
13 (SL1-) - Body	Always	10 kohms

ground		or higher
14 (SL1+) - All other terminals except 13 (SL1-)	Always	10 kohms or higher
13 (SL1-) - All other terminals except 14 (SL1+)	Always	10 kohms or higher

TEXT IN ILLUSTRATION

*a	Component without harness connected: (Transmission Wire)

NG --> See step 2

OK --> See step 3

2. **INSPECT SHIFT SOLENOID VALVE SL1**
   a. Remove shift solenoid valve SL1.

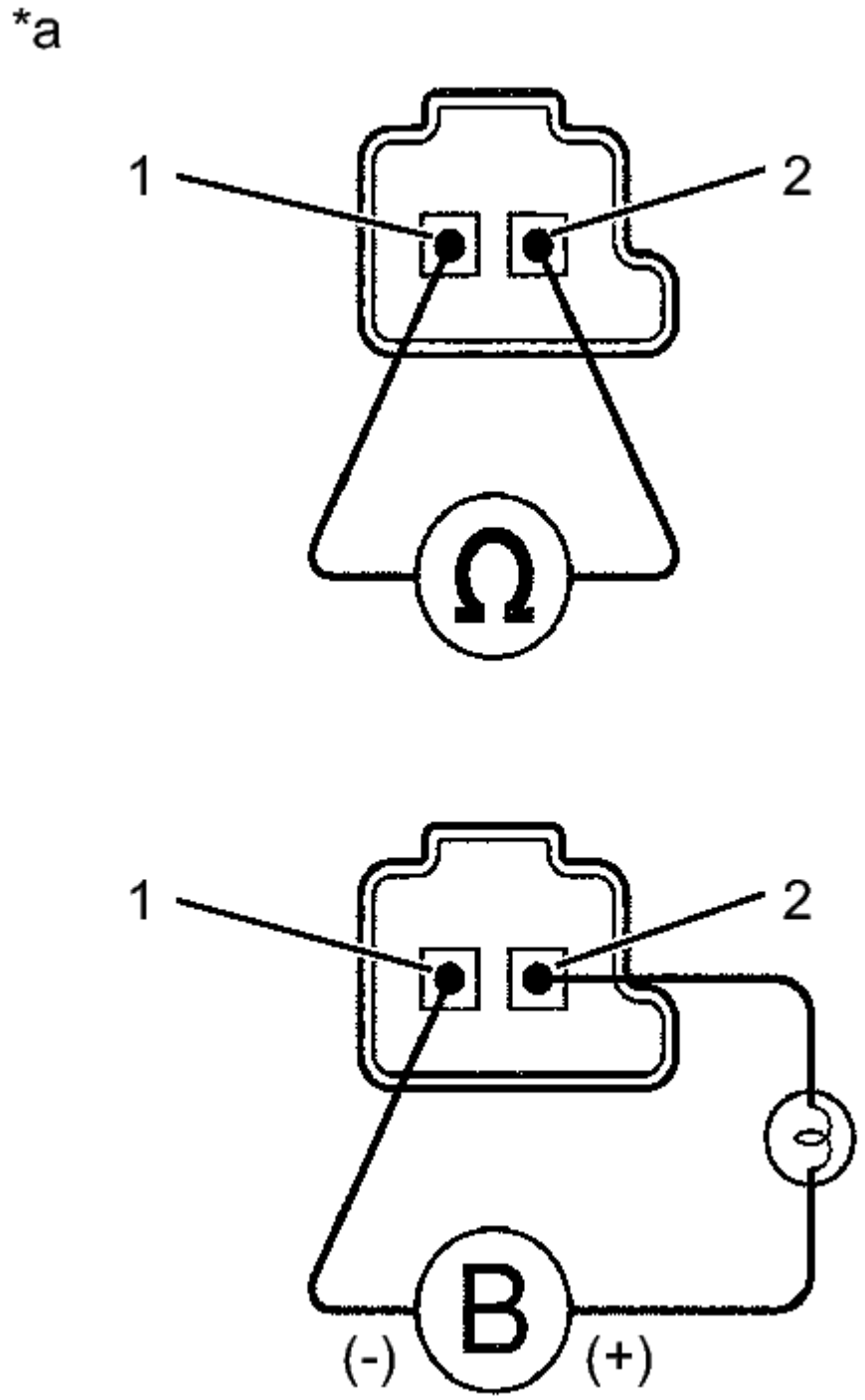

Fig. 35: Measuring Resistance Of Shift Solenoid Valve
Courtesy of TOYOTA MOTOR SALES, U.S.A., INC.

b. Measure the resistance according to the value(s) in the table below.

Standard Resistance

Tester Connection	Condition	Specified Condition
1 - 2	20°C (68° F)	5.0 to 5.6 ohms

TEXT IN ILLUSTRATION

*a	Component without harness connected: (Shift Solenoid Valve SL1)

c. Connect a battery positive (+) lead with a 21 W bulb to terminal 2 and a negative (-) lead to terminal 1 of the solenoid valve connector. Then check that the valve moves and makes an operating sound.

OK

Valve moves and makes an operating sound.

NG --> See step 4

OK --> See step 5

3. **REPLACE TCM. Refer to REMOVAL**
4. **REPLACE SHIFT SOLENOID VALVE SL1. Refer to REMOVAL**
5. **REPLACE TRANSMISSION WIRE. Refer to REMOVAL**

DTC P0776: PRESSURE CONTROL SOLENOID "B" PERFORMANCE (SHIFT SOLENOID VALVE SL2)

DESCRIPTION

The TCM uses the vehicle speed signal and signals from the transmission speed sensors (NC, NT) to detect the actual gear (1st, 2nd, 3rd, 4th, 5th or 6th gear).

Then the TCM compares the actual gear with the shift schedule in the TCM memory to detect mechanical problems of the shift solenoid valves and valve body.

DTC No.	DTC Detection Condition	Trouble Area
	The engine revs freely when 4th, 5th, or 6th gear is commanded (2-trip detection logic).	

P0776	When any of the following is detected twice (2 trip detection logic): • When 1st gear is commanded, 4th gear is engaged. • When 2nd gear is commanded, 4th gear is engaged. • When 3rd gear is commanded, 4th gear is engaged.	• Shift solenoid valve SL2 remains open or closed • Valve body is blocked • Automatic transaxle (clutch, brake or gear etc.)

MONITOR DESCRIPTION

The TCM commands gear shifts by turning the shift solenoid valves on and off. According to the engine speed (NE), input speed (NT) and output speed (NC), the TCM detects the actual gear (1st, 2nd, 3rd, 4th, 5th or 6th gear). When the gear commanded by the TCM and the actual gear are not the same. The TCM will turn on the MIL and store the DTC.

MONITOR STRATEGY

Related DTCs	P0776: Shift solenoid valve SL2/OFF malfunction Shift solenoid valve SL2/ON malfunction
Required sensors/Components	Shift solenoid valve SL2, Input speed sensor (NT), Output speed sensor (NC), Crankshaft position sensor (NE)
Frequency of operation	Continuous
Duration	OFF malfunction 0.5 seconds ON malfunction 0.8 seconds
MIL operation	2 driving cycles
Sequence of operation	None

TYPICAL ENABLING CONDITIONS

ALL:

The monitor will run whenever this DTC is not	P0712, P0713 (ATF temperature sensor circuit (TFT sensor)) P0115, P0117, P0118 (ECT sensor circuit) P0715, P0717 (Input speed sensor (NT) circuit) P0791, P0793 (Output speed sensor (NC) circuit) P0748 (Shift solenoid valve SL1 circuit) P0778 (Shift solenoid valve SL2 circuit) P0798 (Shift solenoid valve SL3 circuit)

present. (Not circuit malfunction)	P2810 (Shift solenoid valve SL4 circuit) P0327, P0328, P0332, P0333 (KCS sensor circuit) P0120, P0121, P0122, P0123, P0220, P0222, P0223, P0604, P0606, P060A, P060B, P060D, P060E, P0657, P1607, P2102, P2103, P2111, P2112, P2118, P2119, P2135 ((ETCS) Electronic throttle control system) U0100 (CAN communication system)
Transmission range	D
TFT (Transmission fluid temperature)	-10°C (14°F) or more
TFT (Transmission fluid temperature) sensor circuit	No circuit malfunction
ECT (Engine coolant temperature) sensor circuit	No circuit malfunction
Input speed sensor (NT) circuit	No circuit malfunction
Output speed sensor (NC) circuit	No circuit malfunction
Shift solenoid valve SL1 circuit	No circuit malfunction
Shift solenoid valve SL2 circuit	No circuit malfunction
Shift solenoid valve SL3 circuit	No circuit malfunction
Shift solenoid valve SL4 circuit	No circuit malfunction
KCS (Knock control sensor circuit)	No circuit malfunction
(ETCS) Electronic throttle control system	Not system down
CAN communication system	Not system down
Engine	Starting

OFF MALFUNCTION:

TCM selected gear	4th, 5th or 6th
TCM indicated pressure value of SL2	1200 kPa
Throttle valve opening angle	3% or more

ON MALFUNCTION (A):

TCM selected gear	1st
Vehicle speed	2 to 40 km/h (1.2 to 24.9 mph)
Engine coolant temperature	40°C (104°F) or more
Engine speed (NE) - Input speed (NT)	50 RPM or more

ON MALFUNCTION (B):

TCM selected gear	2nd
Throttle valve opening angle	4.5% or more at engine speed 2000 RPM (Varies with engine speed)
Vehicle speed	2 km/h (1.2 mph) or more
Engine coolant temperature	40°C (104°F) or more

ON MALFUNCTION (C):

TCM selected gear	3rd
Throttle valve opening angle	4.5% or more at engine speed 2000 RPM (Varies with engine speed)
Vehicle speed	2 km/h (1.2 mph) or more
Engine coolant temperature	40°C (104°F) or more

TYPICAL MALFUNCTION THRESHOLDS

OFF MALFUNCTION:

Input speed (NT) - Output speed (NC) x Gear ratio	1000 RPM or more

ON MALFUNCTION:

Input speed (NT) / Output speed (NC) when output speed less than 1000 RPM	0.998 to 1.138

INSPECTION PROCEDURE

NOTE: **Perform the universal trip to clear permanent DTCs. Refer to DTC CHECK / CLEAR .**

PROCEDURE

1. **CHECK OTHER DTCS OUTPUT (IN ADDITION TO DTC P0776)**
   a. Connect the Techstream to the DLC3.
   b. Turn the ignition switch to ON.
   c. Turn the Techstream on.
   d. Enter the following menus: Powertrain / ECT / Trouble Codes.
   e. Read the DTCs using the Techstream.

RESULT

Result	Proceed to
P0776 and other DTCs are output	A
Only P0776 is output	B

HINT:

If a solenoid is stuck OFF, DTCs for several solenoids including the malfunctioning solenoid will be detected.

B --> See step 3

A: Go to next step

2. **PERFORM ACTIVE TEST USING TECHSTREAM (CONTROL THE SHIFT POSITION)**

NOTE: This test should always be performed with at least 2 people.

a. Warm up the engine.
b. Turn the ignition switch off.
c. Connect the Techstream to the DLC3.
d. Turn the ignition switch to ON.
e. Turn the Techstream on.
f. Enter the following menus: Powertrain / ECT / Active Test.
g. According to the display on the Techstream, perform the Active Test.

HINT:

Comparing the gear commanded by the Active Test with the actual gear enables confirmation of the problem. Refer to **FAIL-SAFE CHART** .

ECT

Tester Display	Test Part	Control Range	Diagnostic Note
Control the Shift Position	Operates the shift solenoid valves to allow gears to selected manually.	• Press "-->" button: Upshift occurs • Press "<--" button: Downshift occurs	Can be used to check the operation of the shift solenoid valves.

NOTE:

- **This test can be conducted when the vehicle is stopped.**
- **When shifting gears using the Active Test function, do not operate the accelerator pedal for 2 seconds before and after shifting gears.**

HINT:

The gear commanded by the TCM is shown in the Data List / Shift Status display on the Techstream.

h. Check the vehicle speed and the gear when the engine speed is 1000 RPM.

HINT:

Because the torque converter clutch has not engaged, it may be difficult to obtain the speeds specified in 4th, 5th, and 6th gear, however a difference of speed should still be evident following each gear change.

Standard

1st	2nd	3rd	4th	5th	6th
8 to 12 km/h (5 to 7.5 mph)	15 to 19 km/h (9.3 to 11.8 mph)	21 to 25 km/h (13.0 to 15.5 mph)	31 to 35 km/h (19.3 to 21.7 mph)	44 to 48 km/h (27.3 to 29.8 mph)	52 to 56 km/h (32.3 to 34.8 mph)

i. Compare the TCM commanded gear and the actual gear.

RESULT

Actuator Gear during Malfunction		TCM Commanded Gear						Proceed to
		1st	2nd	3rd	4th	5th	6th	
Shift solenoid SL1	Stuck ON	1st	2nd	3rd	4th	4th	4th	A
	Stuck OFF	N*1	N*1	N*1	N*1	5th	6th	
Shift solenoid SL2	Stuck ON	4th	4th	4th	4th	5th	6th	B
	Stuck OFF	1st	2nd	3rd	1st	N*1	N*1	
Shift solenoid SL3	Stuck ON	2nd	2nd	3rd	4th	5th	6th	C
	Stuck OFF	1st	1st	3rd	4th	5th	N*1	
Shift solenoid SL4	Stuck ON*3	3rd	3rd	3rd	4th	5th	5th	D
	Stuck OFF	1st	2nd	1st	4th	N*1	6th	
Shift solenoid SLT	Stuck ON	N*2	N*2	N*2	N*2	N*2	N*2	E
	Stuck OFF*3	1st	2nd	3rd	4th	5th	6th	

HINT:

- *1: Neutral

- *2: If shift solenoid SLT is stuck on, the line pressure will be low. Therefore, the amount of torque that can be transmitted by each gear is lower than the normal limit. When the engine power exceeds this lowered limit, the engine speed will increase freely.
- *3: When shift solenoid SLT is stuck off, gear shifting is normal.

A --> See step 8

C --> See step 9

D --> See step 10

E --> See step 11

B: Go to next step

3. **INSPECT SHIFT SOLENOID VALVE SL2**
   a. Remove shift solenoid valve SL2.

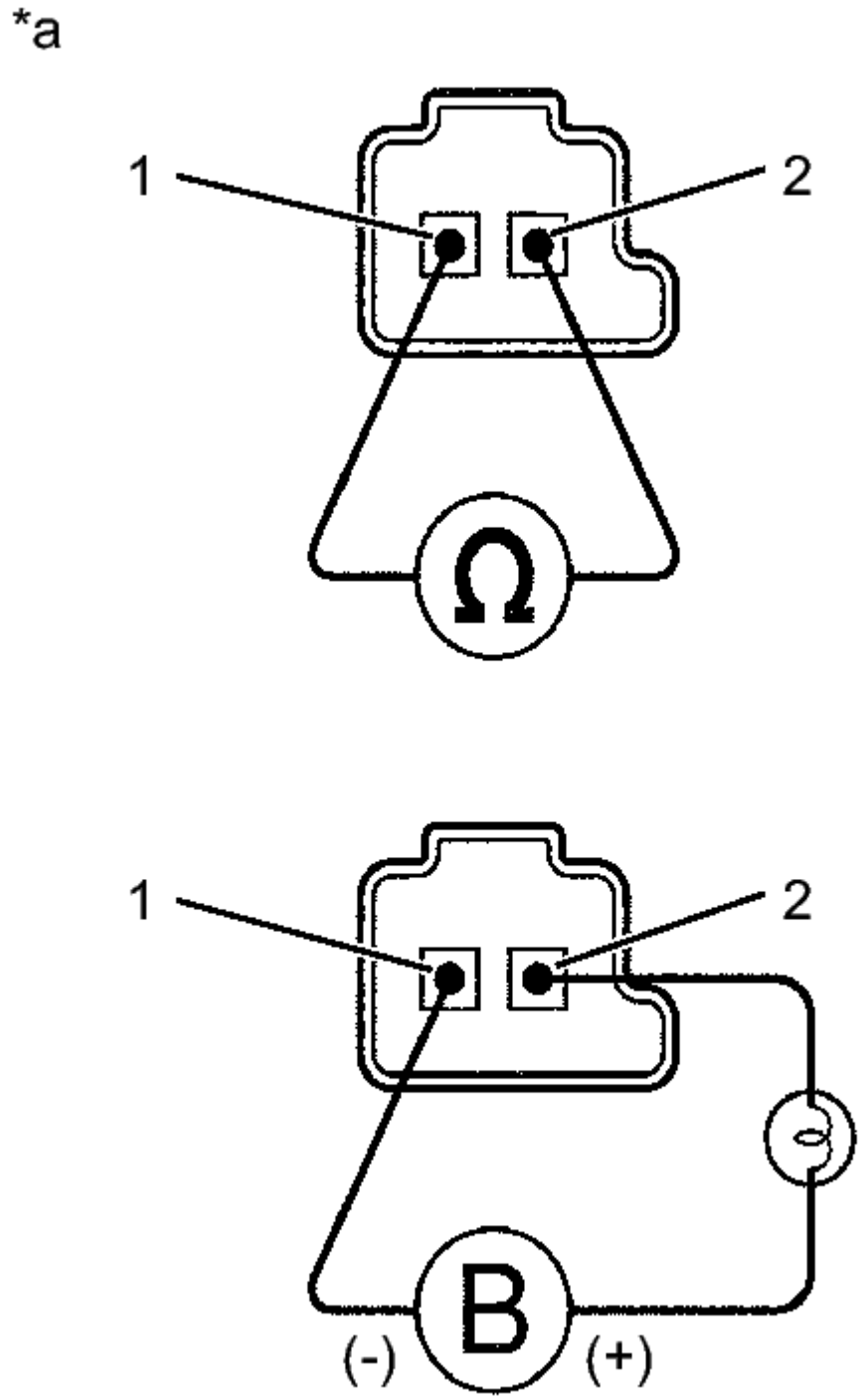

Fig. 36: Measuring Resistance Of Shift Solenoid Valve
Courtesy of TOYOTA MOTOR SALES, U.S.A., INC.

b. Measure the resistance according to the value(s) in the table below.

Standard Resistance

Tester Connection	Condition	Specified Condition
1 - 2	20°C (68° F)	5.0 to 5.6 ohms

TEXT IN ILLUSTRATION

*a	Component without harness connected: (Shift Solenoid Valve SL2)

c. Connect a battery positive (+) lead with a 21 W bulb to terminal 2 and a negative (-) lead to terminal 1 of the solenoid valve connector. Then check that the valve moves and makes an operating sound.

OK

Valve moves and makes an operating sound.

NG --> See step 6

OK: Go to next step

4. **INSPECT TRANSMISSION VALVE BODY ASSEMBLY**
   a. Check the transmission valve body assembly. Refer to **REMOVAL** .

OK

There are no foreign objects on each valve and they operate smoothly.

NG --> See step 7

OK --> See step 5

5. **REPLACE AUTOMATIC TRANSAXLE ASSEMBLY. Refer to REMOVAL**
6. **REPLACE SHIFT SOLENOID VALVE SL2. Refer to REMOVAL**
7. **REPAIR OR REPLACE TRANSMISSION VALVE BODY ASSEMBLY. Refer to REMOVAL**
8. **GO TO DTC CHART (RELATED SHIFT SOLENOID VALVE (SL1) PERFORMANCE DTC P0746). Refer to DTC P0746: Pressure Control Solenoid "A" Performance (Shift Solenoid Valve SL1)**

9. **GO TO DTC CHART (RELATED SHIFT SOLENOID VALVE (SL3) PERFORMANCE DTC P0796). Refer to DTC P0796: Pressure Control Solenoid "C" Performance (Shift Solenoid Valve SL3)**
10. **GO TO DTC CHART (RELATED SHIFT SOLENOID VALVE (SL4) PERFORMANCE DTC P2808). Refer to DTC P2808: Pressure Control Solenoid "G" Performance (Shift Solenoid Valve SL4)**
11. **GO TO DTC CHART (RELATED SHIFT SOLENOID VALVE (SLT) PERFORMANCE DTC P2714). Refer to DTC P2714: Pressure Control Solenoid "D" Performance (Shift Solenoid Valve SLT)**

DTC P0778: PRESSURE CONTROL SOLENOID "B" ELECTRICAL (SHIFT SOLENOID VALVE SL2)

DESCRIPTION

Changing from 1st to 6th is performed by the TCM turning shift solenoid valves SL1, SL2, SL3, SL4 and SL on and off. If an open or short circuit occurs in any of the shift solenoid valves, the TCM controls the remaining normal shift solenoid valves to allow the vehicle to be operated. Refer to **FAIL-SAFE CHART** .

DTC No.	DTC Detection Condition	Trouble Area
P0778	The TCM checks for an open or short in the shift solenoid valve SL2 circuit while driving and shifting gears. (1 trip detection logic) • Output signal duty equals to 100%. (NOTE: SL2 output signal duty is less than 100% under normal condition.)	• Open or short in shift solenoid valve SL2 circuit • Shift solenoid valve SL2 • Transmission wire • TCM

MONITOR DESCRIPTION

This DTC indicates an open or short in the shift solenoid valve SL2 circuit. The TCM commands gear shifts by turning the shift solenoid valves on or off. When there is an open or short circuit in any of the shift solenoid valve circuits, the TCM detects the problem and illuminates the MIL and stores the DTC. The TCM also performs the fail-safe function and turns the other normal shift solenoid valves on or off. (In case of an open or short circuit, the TCM stops sending current to the circuit.)

While driving and shifting gears, if the TCM detects an open or short in the shift solenoid valve SL2 circuit, the TCM determines there is a malfunction. Refer to **FAIL-SAFE CHART** .

MONITOR STRATEGY

Related DTCs	P0778: Shift solenoid valve SL2/Range

	check
Required sensors/Components	Shift solenoid valve SL2
Frequency of operation	Continuous
Duration	1 second
MIL operation	Immediately
Sequence of operation	None

TYPICAL ENABLING CONDITIONS

ALL

The monitor will run whenever the following DTCs are not present	None
Ignition switch	ON
Starter	OFF

CONDITION (A)

Battery voltage	12 V or more

CONDITION (B)

Battery voltage	10 V or more and less than 12 V
CPU commanded duty	Less than 75%

TYPICAL MALFUNCTION THRESHOLDS

ALL

Output signal duty	100% or more

COMPONENT OPERATING RANGE

Output signal duty	More than 3% and less than 100%

WIRING DIAGRAM

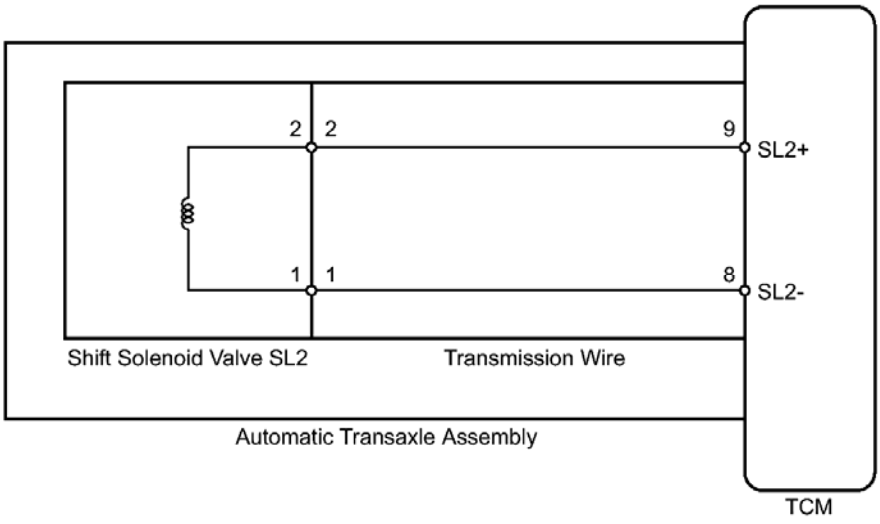

Fig. 37: Shift Solenoid Valve SL2 Circuit - Wiring Diagram
Courtesy of TOYOTA MOTOR SALES, U.S.A., INC.

INSPECTION PROCEDURE

NOTE: **Perform the universal trip to clear permanent DTCs. Refer to DTC CHECK / CLEAR .**

HINT:

The following table shows normal operation of the shift solenoid valve SL2 when the shift lever is in D:

TCM commanded gear	1st	2nd	3rd	4th	5th	6th
Shift solenoid valve SL2	OFF	OFF	OFF	ON	ON	ON

PROCEDURE

1. **INSPECT TRANSMISSION WIRE (SHIFT SOLENOID VALVE SL2)**
   a. Remove the TCM from the transaxle.

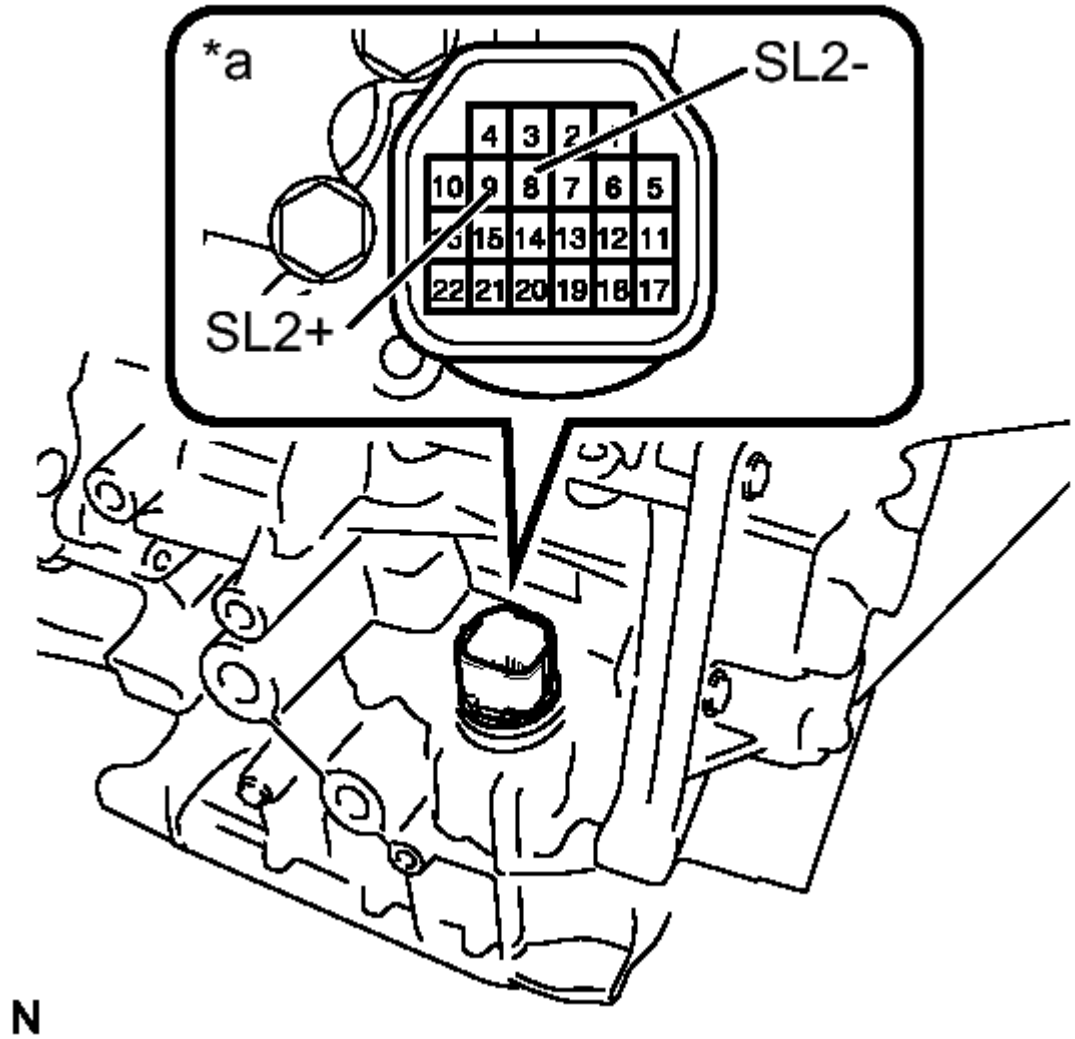

Fig. 38: Inspecting Transmission Wire (Shift Solenoid Valve SL2)
Courtesy of TOYOTA MOTOR SALES, U.S.A., INC.

b. Measure the resistance according to the value(s) in the table below.

Standard Resistance

Tester Connection	Condition	Specified Condition
9 (SL2+) - 8 (SL2-)	20°C (68° F)	5.0 to 5.6 ohms
9 (SL2+) - Body ground	Always	10 kohms or higher
8 (SL2-) - Body	Always	10 kohms

ground		or higher
9 (SL2+) - All other terminals except 8 (SL2-)	Always	10 kohms or higher
8 (SL2-) - All other terminals except 9 (SL2+)	Always	10 kohms or higher

TEXT IN ILLUSTRATION

*a	Component without harness connected: (Transmission Wire)

NG --> See step 2

OK --> See step 4

2. **INSPECT SHIFT SOLENOID VALVE SL2**
   a. Remove shift solenoid valve SL2.

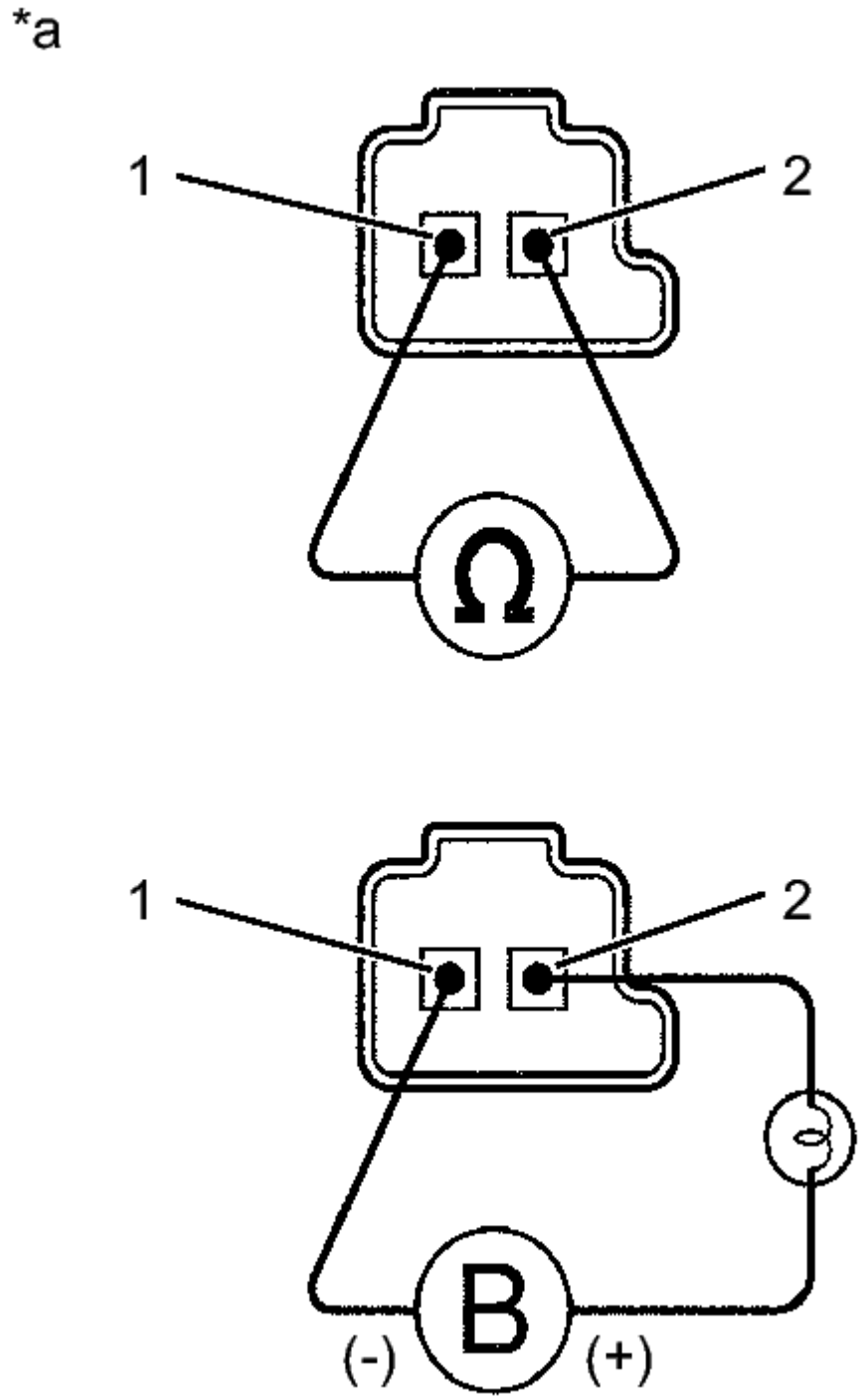

Fig. 39: Measuring Resistance Of Shift Solenoid Valve
Courtesy of TOYOTA MOTOR SALES, U.S.A., INC.

b. Measure the resistance according to the value(s) in the table below.

Standard Resistance

Tester Connection	Condition	Specified Condition
1 - 2	20°C (68° F)	5.0 to 5.6 ohms

TEXT IN ILLUSTRATION

*a	Component without harness connected: (Shift Solenoid Valve SL2)

c. Connect a battery positive (+) lead with a 21 W bulb to terminal 2 and a negative (-) lead to terminal 1 of the solenoid valve connector. Then check that the valve moves and makes an operating sound.

OK

Valve moves and makes an operating sound.

NG --> See step 5

OK --> See step 3

3. **REPLACE TRANSMISSION WIRE. Refer to REMOVAL**
4. **REPLACE TCM. Refer to REMOVAL**
5. **REPLACE SHIFT SOLENOID VALVE SL2. Refer to REMOVAL**

DTC P0791: INTERMEDIATE SHAFT SPEED SENSOR "A" CIRCUIT; DTC P0793: INTERMEDIATE SHAFT SPEED SENSOR "A"

DESCRIPTION

This sensor detects the rotation speed of the counter gear which shows the output speed of transaxle. By comparing the input speed signal (NT) with the output speed sensor signal (NC), the TCM detects the shift timing of the gears and appropriately controls the engine torque and hydraulic pressure according to various conditions, thus, providing smooth gear shifts.

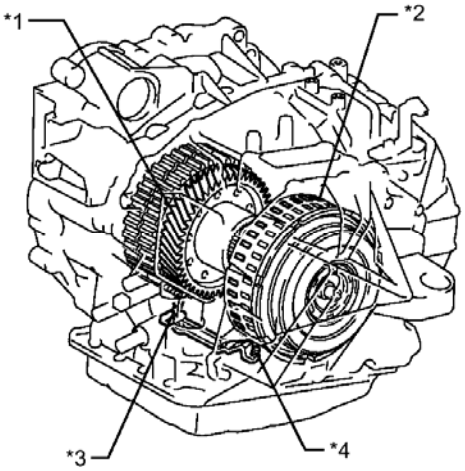

N

Fig. 40: Identifying Counter Gear, Clutch Drum, Input Speed Sensor And Output Speed Sensor
Courtesy of TOYOTA MOTOR SALES, U.S.A., INC.

TEXT IN ILLUSTRATION

*1	Counter Gear	*2	Clutch Drum
*3	Output Speed Sensor (NC)	*4	Input Speed Sensor (NT)

DTC No.	DTC Detection Condition	Trouble Area
P0791	When the speed sensor input voltage is either more than 1.9 V or less than 0.1 V for 2 seconds or more. (1 trip detection logic)	• Transmission revolution sensor (output speed sensor NC) • Transmission wire • TCM
P0793	When the vehicle speed is 25 km/h (15.54 mph) or higher, the counter gear speed is less than 300 RPM for 2 seconds or more. (1 trip detection logic)	

MONITOR DESCRIPTION

The NT terminal of the TCM detects a revolution signal from the input speed sensor (NT). The TCM calculates gear shifts by comparing the input speed sensor (NT) with the output speed sensor (NC).

While the vehicle is operating in 2nd, 3rd, 4th, 5th or 6th gear with the shift lever in D, if the input shaft

revolution is less than 300 rpm*1 although the output shaft revolution is more than 1000 RPM, the TCM interprets this as a fault, illuminates the MIL and stores the DTC.

*1: Pulse is not output or is irregularly output.

MONITOR STRATEGY

Related DTCs	P0791: Output speed sensor (NC)/Range check P0793: Output speed sensor (NC)/Verify pulse input
Required sensors/Components	Input speed sensor (NT), Output speed sensor (NC)
Frequency of operation	Continuous
Duration	2 seconds
MIL operation	Immediately
Sequence of operation	None

TYPICAL ENABLING CONDITIONS

P0791

Vehicle speed	25 km/h (15.54 mph) or more
Battery voltage	8 V or more
Ignition switch	ON
Starter	OFF
Intermediate shaft speed sensor (speed sensor (NC)) pulse input fail (P0793)	Not detected

P0793

The monitor will run whenever this DTC is not present.	None
Vehicle speed	25 km/h (15.54 mph) or more
Battery voltage	8 V or more
Ignition switch	ON
Starter	OFF
Intermediate shaft speed sensor (speed sensor (NC)) range check fail (P0791)	Not detected

TYPICAL MALFUNCTION THRESHOLDS

P0791:

Sensor voltage	Less than 0.1 V, or more than 1.9 V

P0793:

Sensor signal speed	Less than 300 RPM

WIRING DIAGRAM

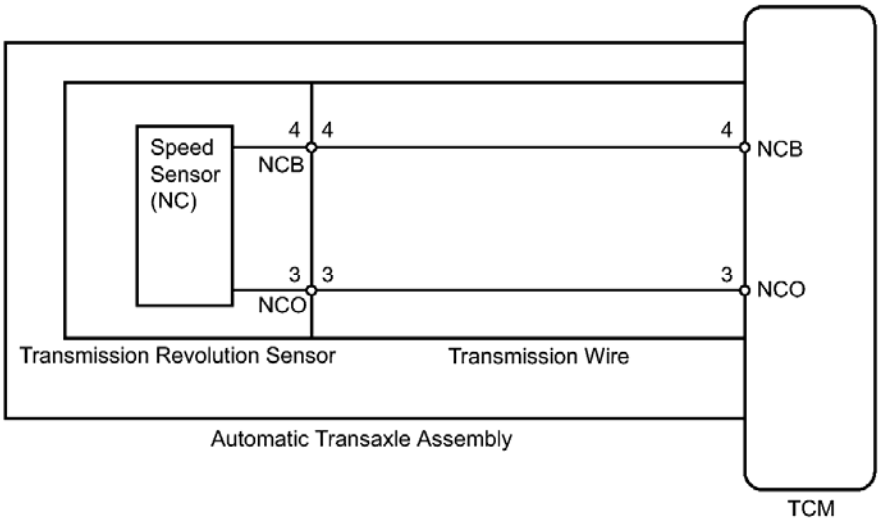

Fig. 41: Intermediate Shaft Speed Sensor Circuit - Wiring Diagram
Courtesy of TOYOTA MOTOR SALES, U.S.A., INC.

INSPECTION PROCEDURE

NOTE: **Perform the universal trip to clear permanent DTCs. Refer to DTC CHECK / CLEAR .**

1. **DATA LIST**

   HINT:

   Using the Techstream to read the Data List allows the values or states of switches, sensors, actuators and other items to be read without removing any parts. This non-intrusive inspection can be very useful because intermittent conditions or signals may be discovered before parts or wiring is disturbed. Reading the Data List information early in troubleshooting is one way to save diagnostic time.

   NOTE: **In the table below, the values listed under "Normal Condition" are reference values. Do not depend solely on these reference values when deciding whether a part is faulty or not.**

   a. Warm up the engine.
   b. Turn the ignition switch off.
   c. Connect the Techstream to the DLC3.
   d. Turn the ignition switch to ON.
   e. Turn the Techstream on.
   f. Enter the following menus: Powertrain / ECT / Data List / All Data.

g. According to the display on the Techstream, read the Data List.

ECT

Tester Display	Measurement Item/Range	Normal Condition	Diagnostic Note
SPD (NC)	Counter Gear Speed/ Min.: 0 RPM, Max.: 12750 RPM	-	-

HINT:

- SPD (NC) is always 0 while driving: Open or short in the sensor or circuit.
- SPD (NC) is always more than 0 and less than 300 RPM while driving the vehicle at 50 km/h (31 mph) or more: Sensor trouble, improper installation, or intermittent connection trouble of the circuit.

PROCEDURE

1. **INSPECT TRANSMISSION REVOLUTION SENSOR (SENSOR INSTALLATION)**
   a. Remove the valve body assembly.
   b. Make sure that the connector is properly connected, and check the transmission revolution sensor installation.

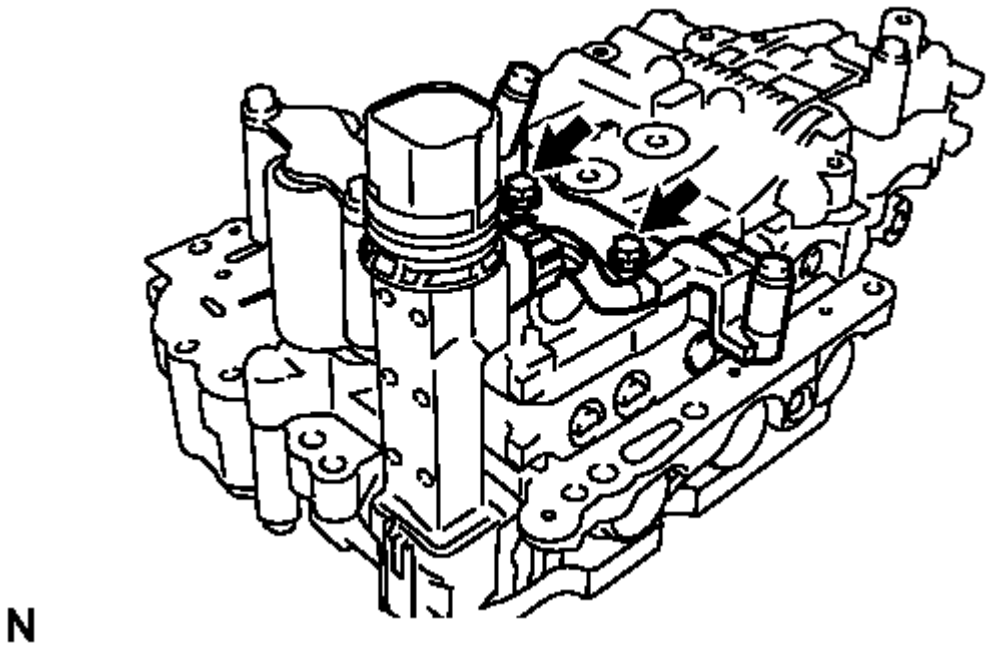

Fig. 42: Identifying Speed Sensor Bolts

Courtesy of TOYOTA MOTOR SALES, U.S.A., INC.

OK

The installation bolts are tightened properly and there is no clearance between the sensor and transmission valve body.

NG --> See step 6

OK: Go to next step

2. **INSPECT TRANSMISSION WIRE**
   a. Remove the TCM.

*a

*b

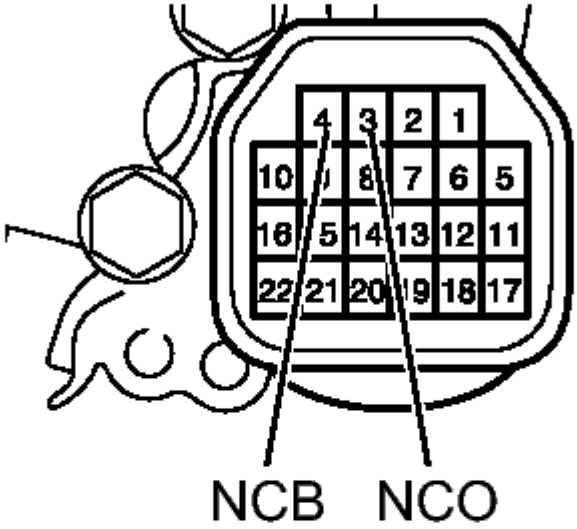

*c

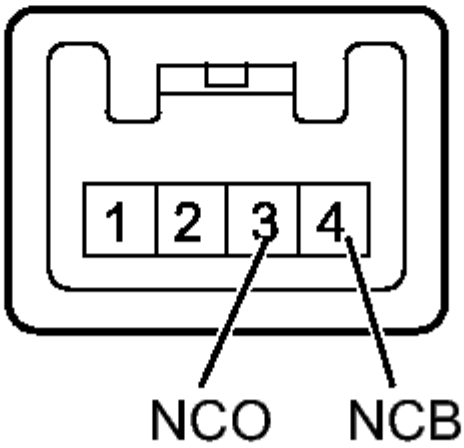

Fig. 43: Measuring Resistance Of Transmission Wire
Courtesy of TOYOTA MOTOR SALES, U.S.A., INC.

b. Disconnect the speed sensor connector from the transmission wire.
c. Measure the resistance according to the value(s) in the table below.

Standard Resistance

Tester Connection	Condition	Specified Condition
3 (NCO) - 3 (NCO)	Always	Below 1 ohms
4 (NCB) - 4 (NCB)	Always	Below 1 ohms
3 (NCO) - Body ground	Always	10 kohms or higher
4 (NCB) - Body ground	Always	10 kohms or higher
3 (NCO) - All other terminals except 4 (NCB)	Always	10 kohms or higher
4 (NCB) - All other terminals except 3 (NCO)	Always	10 kohms or higher

TEXT IN ILLUSTRATION

*a	Component without harness connected: (Transmission Wire)
*b	TCM side:
*c	Sensor Side:

NG --> See step 7

OK: Go to next step

3. **REPLACE TRANSMISSION REVOLUTION SENSOR**
   a. Replace the transmission revolution sensor. Refer to **REMOVAL** .

NEXT: Go to next step

4. **CHECK DTC OUTPUT**

a. Connect the Techstream to the DLC3.
b. Start the engine and turn the Techstream on.
c. Enter the following menus: Powertrain / ECT / Trouble Codes / Clear.

HINT:

Write down the currently output DTCs before clearing them.

d. Perform the monitor drive pattern. Refer to **MONITOR DRIVE PATTERN** .
e. Enter the following menus: Powertrain / ECT / Trouble Codes.
f. Read the DTCs using the Techstream.

RESULT

Result	Proceed to
No output	A
Only P0791 and/or P0793 is output	B

B --> See step 5

A --> END

5. **REPLACE TCM. Refer to REMOVAL**
6. **SECURELY INSTALL OR REPLACE TRANSMISSION REVOLUTION SENSOR. Refer to INSTALLATION**
7. **REPLACE TRANSMISSION WIRE. Refer to REMOVAL**

DTC P0796: PRESSURE CONTROL SOLENOID "C" PERFORMANCE (SHIFT SOLENOID VALVE SL3)

DESCRIPTION

The TCM uses the vehicle speed signal and signals from the transmission speed sensors (NC, NT) to detect the actual gear (1st, 2nd, 3rd, 4th, 5th or 6th gear).

Then the TCM compares the actual gear with the shift schedule in the TCM memory to detect mechanical problems of the shift solenoid valves and valve body.

DTC No.	DTC Detection Condition	Trouble Area

P0796	The engine revs freely when 2nd or 6th gear is commanded (2 trip detection logic). When the following is detected twice (2 trip detection logic): • When 1st gear is commanded, 2nd gear is engaged.	• Shift solenoid valve SL3 remains open or closed. • Valve body is blocked. • Automatic transaxle (clutch, brake or gear etc.)

MONITOR DESCRIPTION

The TCM commands gear shifts by turning the shift solenoid valves on and off. According to the engine speed (NE), input speed (NT) and output speed (NC), the TCM detects the actual gear (1st, 2nd, 3rd, 4th, 5th or 6th gear). When the gear commanded by the TCM and the actual gear are not the same, the TCM illuminates the MIL and stores the DTC.

MONITOR STRATEGY

Related DTCs	P0796: Shift solenoid valve SL3/OFF malfunction Shift solenoid valve SL3/ON malfunction
Required sensors/Components	Shift solenoid valve SL3, Input speed sensor (NT), Output speed sensor (NC), Crankshaft position sensor (NE)
Frequency of operation	Continuous
Duration	OFF malfunction (A) and (B) 0.5 seconds OFF malfunction (C) and (D) 0.8 seconds ON malfunction 0.8 seconds
MIL operation	2 driving cycles
Sequence of operation	None

TYPICAL ENABLING CONDITIONS

ALL:

The monitor will run whenever this DTC is not present.	P0712, P0713 (ATF temperature sensor circuit (TFT sensor)) P0115, P0117, P0118 (ECT sensor circuit) P0715, P0717 (Input speed sensor (NT) circuit) P0791, P0793 (Output speed sensor (NC) circuit) P0748 (Shift solenoid valve SL1 circuit) P0778 (Shift solenoid valve SL2 circuit) P0798 (Shift solenoid valve SL3 circuit)

(Not circuit malfunction)	P2810 (Shift solenoid valve SL4 circuit) P0327, P0328, P0332, P0333 (KCS sensor circuit) P0120, P0121, P0122, P0123, P0220, P0222, P0223, P0604, P0606, P060A, P060B, P060D, P060E, P0657, P1607, P2102, P2103, P2111, P2112, P2118, P2119, P2135 ((ETCS) Electronic throttle control system) U0100 (CAN communication system)
Transmission range	D
TFT (Transmission fluid temperature)	-10°C (14°F) or more
TFT (Transmission fluid temperature) sensor circuit	No circuit malfunction
ECT (Engine coolant temperature) sensor circuit	No circuit malfunction
Input speed sensor (NT) circuit	No circuit malfunction
Output speed sensor (NC) circuit	No circuit malfunction
Shift solenoid valve SL1 circuit	No circuit malfunction
Shift solenoid valve SL2 circuit	No circuit malfunction
Shift solenoid valve SL3 circuit	No circuit malfunction
Shift solenoid valve SL4 circuit	No circuit malfunction
KCS (Knock control sensor circuit)	No circuit malfunction
(ETCS) Electronic throttle control system	Not system down
CAN communication system	Not system down
Engine	Starting

OFF MALFUNCTION (A):

TCM selected gear	2nd
Throttle valve opening angle	3% or more
TCM indicated pressure value of SL1	1200 kPa
TCM indicated pressure value of SL2	0 kPa
TCM indicated pressure value of SL3	1200 kPa

OFF MALFUNCTION (B):

TCM selected gear	6th
Throttle valve opening angle	3% or more
TCM indicated pressure value of SL1	0 kPa
TCM indicated pressure value of SL2	1200 kPa
TCM indicated pressure value of SL3	1200 kPa

OFF MALFUNCTION (C):

TCM selected gear	2nd
Throttle valve opening angle:	
(When condition "D" is not detected)	4.5% or more at engine speed 2000 RPM (condition varies with engine speed)
	1.5% or more at output speed 750 RPM

(When condition "D" is detected)	(condition varies with output speed)
Engine coolant temperature	40°C (104°F) or more

OFF MALFUNCTION (D):

Throttle valve opening angle	1.5% or more at output speed 750 RPM (condition varies with output speed)

ON MALFUNCTION:

TCM selected gear	1st
Vehicle speed	2 to 40 km/h (1.2 to 24.9 mph)
Engine speed (NE) - Input speed (NT)	50 RPM or more
Engine coolant temperature	40°C (104°F) or more

TYPICAL MALFUNCTION THRESHOLDS

Either of the following conditions is met: OFF malfunction (A) or (B) or ((C) and (D)), or ON malfunctions

2 detections are necessary per driving cycle:

1st detection; temporary flag ON

2nd detection; pending fault code ON

OFF MALFUNCTION (A):

Input speed (NT) - Output speed (NC) x 2nd gear ratio	1000 RPM or more

OFF MALFUNCTION (B):

Input speed (NT) - Output speed (NC) x 6th gear ratio	1000 RPM or more

OFF MALFUNCTION (C):

Input speed (NT) / Output speed (NC)	3.304 to 7.724

OFF MALFUNCTION (D):

Input speed (NT) / Output speed (NC)	3.304 to 7.724

ON MALFUNCTION:

Input speed (NT) / Output speed (NC)	1.901 to 2.340

INSPECTION PROCEDURE

NOTE: **Perform the universal trip to clear permanent DTCs. Refer to DTC CHECK / CLEAR .**

PROCEDURE

1. **CHECK OTHER DTCS OUTPUT (IN ADDITION TO DTC P0796)**
   a. Connect the Techstream to the DLC3.
   b. Turn the ignition switch to ON.
   c. Turn the Techstream on.
   d. Enter the following menus: Powertrain / ECT / Trouble Codes.
   e. Read the DTCs using the Techstream.

   RESULT

Result	Proceed to
P0796 and other DTCs are output	A
Only P0796 is output	B

   HINT:

   If a solenoid is stuck off, DTCs for several solenoids including the malfunctioning solenoid will be detected.

B --> See step 3

A: Go to next step

2. **PERFORM ACTIVE TEST USING TECHSTREAM (CONTROL THE SHIFT POSITION)**

NOTE: This test should always be performed with at least 2 people.

   a. Warm up the engine.
   b. Turn the ignition switch off.
   c. Connect the Techstream to the DLC3.
   d. Turn the ignition switch to ON.
   e. Turn the Techstream on.
   f. Enter the following menus: Powertrain / ECT / Active Test.
   g. According to the display on the Techstream, perform the Active Test.

   HINT:

Comparing the gear commanded by the Active Test with the actual gear enables confirmation of the problem. Refer to **FAIL-SAFE CHART** .

ECT

Tester Display	Test Part	Control Range	Diagnostic Note
Control the Shift Position	Operates the shift solenoid valves to allow gears to selected manually.	• Press "-->" button: Upshift occurs • Press "<--" button: Downshift occurs	Can be used to check the operation of the shift solenoid valves.

NOTE:

- **This test can be conducted when the vehicle is stopped.**
- **When shifting gears using the Active Test function, do not operate the accelerator pedal for 2 seconds before and after shifting gears.**

HINT:

The gear commanded by the TCM is shown in the Data List / Shift Status display on the Techstream.

h. Check the vehicle speed and the gear when the engine speed is 1000 RPM.

HINT:

Because the torque converter clutch has not engaged, it may be difficult to obtain the speeds specified in 4th, 5th, and 6th gear, however a difference of speed should still be evident following each gear change.

Standard

1st	2nd	3rd	4th	5th	6th
8 to 12 km/h (5 to 7.5 mph)	15 to 19 km/h (9.3 to 11.8 mph)	21 to 25 km/h (13.0 to 15.5 mph)	31 to 35 km/h (19.3 to 21.7 mph)	44 to 48 km/h (27.3 to 29.8 mph)	52 to 56 km/h (32.3 to 34.8 mph)

i. Compare the TCM commanded gear and the actual gear.

RESULT

Actuator Gear during Malfunction		TCM Commanded Gear						Proceed to
		1st	2nd	3rd	4th	5th	6th	
Shift solenoid SL1	Stuck ON	1st	2nd	3rd	4th	4th	4th	A
	Stuck OFF	N*1	N*1	N*1	N*1	5th	6th	
Shift solenoid SL2	Stuck ON	4th	4th	4th	4th	5th	6th	B
	Stuck OFF	1st	2nd	3rd	1st	N*1	N*1	
Shift solenoid SL3	Stuck ON	2nd	2nd	3rd	4th	5th	6th	C
	Stuck OFF	1st	1st	3rd	4th	5th	N*1	
Shift solenoid SL4	Stuck ON*3	3rd	3rd	3rd	4th	5th	5th	D
	Stuck OFF	1st	2nd	1st	4th	N*1	6th	
Shift solenoid SLT	Stuck ON	N*2	N*2	N*2	N*2	N*2	N*2	E
	Stuck OFF*3	1st	2nd	3rd	4th	5th	6th	

HINT:

- *1: Neutral
- *2: If shift solenoid SLT is stuck on, the line pressure will be low. Therefore, the amount of torque that can be transmitted by each gear is lower than the normal limit. When the engine power exceeds this lowered limit, the engine speed will increase freely.
- *3: When shift solenoid SLT is stuck off, gear shifting is normal.

A --> See step 8

B --> See step 9

D --> See step 10

E --> See step 11

C: Go to next step

3. **INSPECT SHIFT SOLENOID VALVE SL3**
   a. Remove shift solenoid valve SL3.

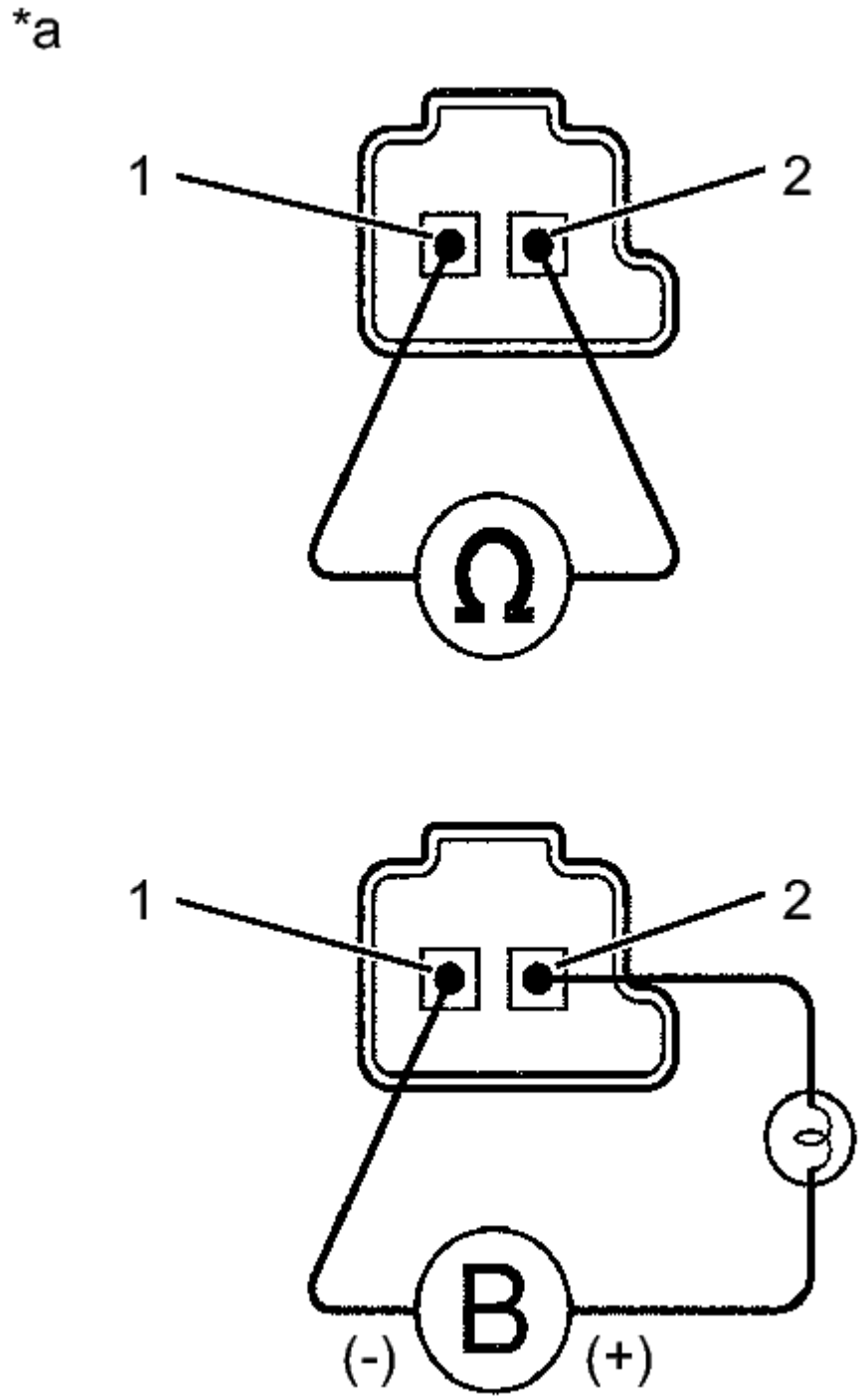

Fig. 44: Measuring Resistance Of Shift Solenoid Valve
Courtesy of TOYOTA MOTOR SALES, U.S.A., INC.

b. Measure the resistance according to the value(s) in the table below.

Standard Resistance

Tester Connection	Condition	Specified Condition
1 - 2	20°C (68° F)	5.0 to 5.6 ohms

TEXT IN ILLUSTRATION

*a	Component without harness connected: (Shift Solenoid Valve SL3)

c. Connect a battery positive (+) lead with a 21 W bulb to terminal 2 and a negative (-) lead to terminal 1 of the solenoid valve connector. Then check that the valve moves and makes an operating sound.

OK

Valve moves and makes an operating sound.

NG --> See step 6

OK: Go to next step

4. **INSPECT TRANSMISSION VALVE BODY ASSEMBLY**
   a. Check the transmission valve body assembly. Refer to **REMOVAL** .

OK

There are no foreign objects on each valve and they operate smoothly.

NG --> See step 7

OK --> See step 5

5. **REPLACE AUTOMATIC TRANSAXLE ASSEMBLY. Refer to REMOVAL**
6. **REPLACE SHIFT SOLENOID VALVE SL3. Refer to REMOVAL**
7. **REPAIR OR REPLACE TRANSMISSION VALVE BODY ASSEMBLY. Refer to REMOVAL**
8. **GO TO DTC CHART (RELATED SHIFT SOLENOID VALVE (SL1) PERFORMANCE DTC P0746). Refer to DTC P0746: Pressure Control Solenoid "A" Performance (Shift Solenoid Valve SL1)**

9. **GO TO DTC CHART (RELATED SHIFT SOLENOID VALVE (SL2) PERFORMANCE DTC P0776). Refer to DTC P0776: Pressure Control Solenoid "B" Performance (Shift Solenoid Valve SL2)**
10. **GO TO DTC CHART (RELATED SHIFT SOLENOID VALVE (SL4) PERFORMANCE DTC P2808). Refer to DTC P2808: Pressure Control Solenoid "G" Performance (Shift Solenoid Valve SL4)**
11. **GO TO DTC CHART (RELATED SHIFT SOLENOID VALVE (SLT) PERFORMANCE DTC P2714). Refer to DTC P2714: Pressure Control Solenoid "D" Performance (Shift Solenoid Valve SLT)**

DTC P0798: PRESSURE CONTROL SOLENOID "C" ELECTRICAL (SHIFT SOLENOID VALVE SL3)

DESCRIPTION

Changing from 1st to 6th is performed by the TCM turning shift solenoid valves SL1, SL2, SL3, SL4 and SL on and off. If an open or short circuit occurs in any of the shift solenoid valves, the TCM controls the remaining normal shift solenoid valves to allow the vehicle to be operated. Refer to **FAIL-SAFE CHART** .

DTC No.	DTC Detection Condition	Trouble Area
P0798	The TCM checks for an open or short in the shift solenoid valve SL3 circuit while driving and shifting gears. (1-trip detection logic) • Output signal duty equals to 100%. (NOTE: SL3 output signal duty is less than 100% under normal condition.)	• Open or short in shift solenoid valve SL3 circuit • Shift solenoid valve SL3 • Transmission wire • TCM

MONITOR DESCRIPTION

The TCM commands gear shifts by turning the shift solenoid valves on or off. When there is an open or short circuit in any shift solenoid valve circuit, the TCM detects the problem and illuminates the MIL and stores the DTC. The TCM also performs the fail-safe function and turns the other normal shift solenoid valves on or off (In case of an open or short circuit, the TCM stops sending current to the circuit.)

Refer to **FAIL-SAFE CHART** .

MONITOR STRATEGY

Related DTCs	P0798: Shift solenoid valve SL3/Range check
Required sensors/Components	Shift solenoid valve SL3

Frequency of operation	Continuous
Duration	1 second
MIL operation	Immediately
Sequence of operation	None

TYPICAL ENABLING CONDITIONS

ALL

The monitor will run whenever the following DTCs are not present	None
Ignition switch	ON
Starter	OFF

CONDITION (A)

Battery voltage	12 V or more

CONDITION (B)

Battery voltage	10 V or more and less than 12 V
CPU commanded duty	Less than 75%

TYPICAL MALFUNCTION THRESHOLDS

ALL

Output signal duty	100% or more

COMPONENT OPERATING RANGE

Output signal duty	More than 3% and less than 100%

WIRING DIAGRAM

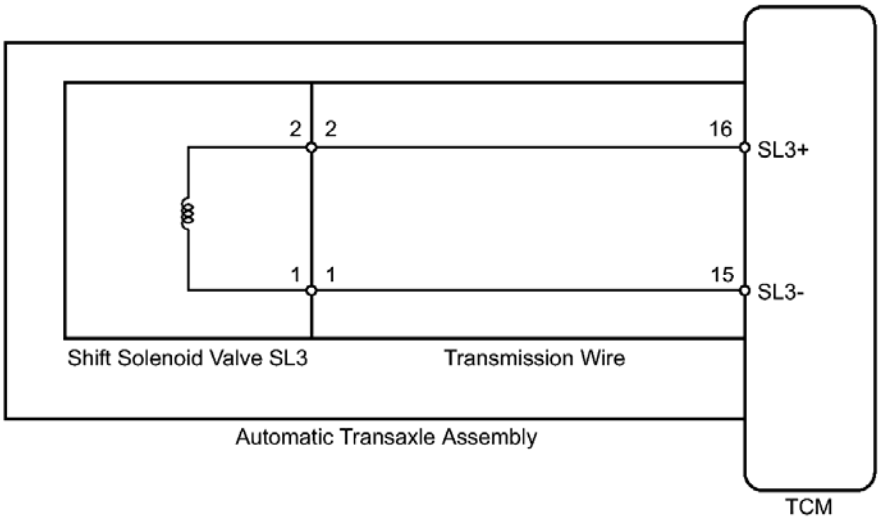

Fig. 45: Shift Solenoid Valve SL3 Circuit - Wiring Diagram
Courtesy of TOYOTA MOTOR SALES, U.S.A., INC.

INSPECTION PROCEDURE

NOTE: **Perform the universal trip to clear permanent DTCs. Refer to DTC CHECK / CLEAR .**

PROCEDURE

1. **INSPECT TRANSMISSION WIRE (SHIFT SOLENOID VALVE SL3)**
   a. Remove the TCM from the transaxle.

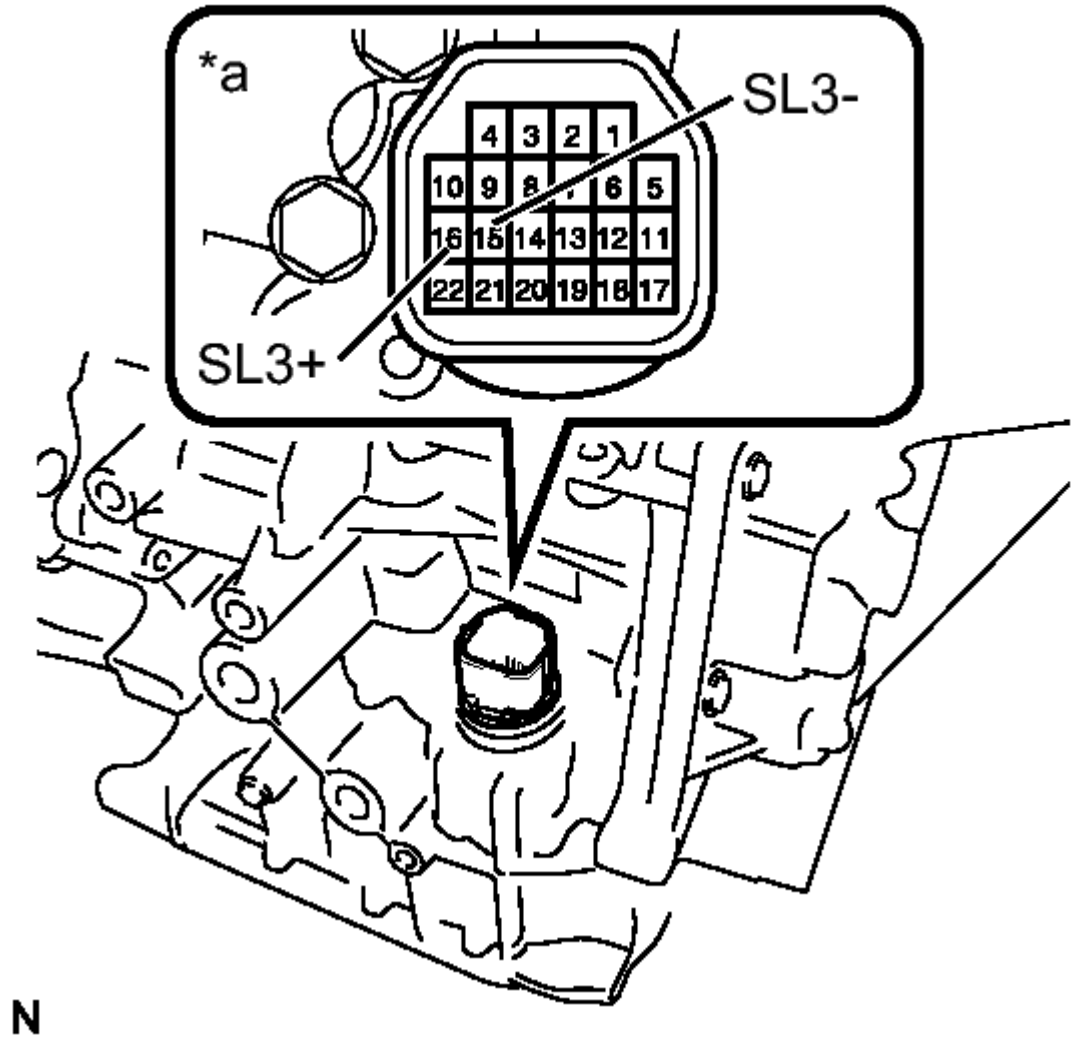

Fig. 46: Inspecting Transmission Wire (Shift Solenoid Valve SL3)
Courtesy of TOYOTA MOTOR SALES, U.S.A., INC.

b. Measure the resistance according to the value(s) in the table below.

Standard Resistance

Tester Connection	Condition	Specified Condition
16 (SL3+) - 15 (SL3-)	20°C (68° F)	5.0 to 5.6 ohms
16 (SL3+) - Body ground	Always	10 kohms or higher
15 (SL3-) - Body	Always	10 kohms

ground		or higher
16 (SL3+) - All other terminals except 15 (SL3-)	Always	10 kohms or higher
15 (SL3-) - All other terminals except 16 (SL3+)	Always	10 kohms or higher

TEXT IN ILLUSTRATION

*a	Component without harness connected: (Transmission Wire)

NG --> See step 2

OK --> See step 4

2. **INSPECT SHIFT SOLENOID VALVE SL3**
   a. Remove shift solenoid valve SL3.

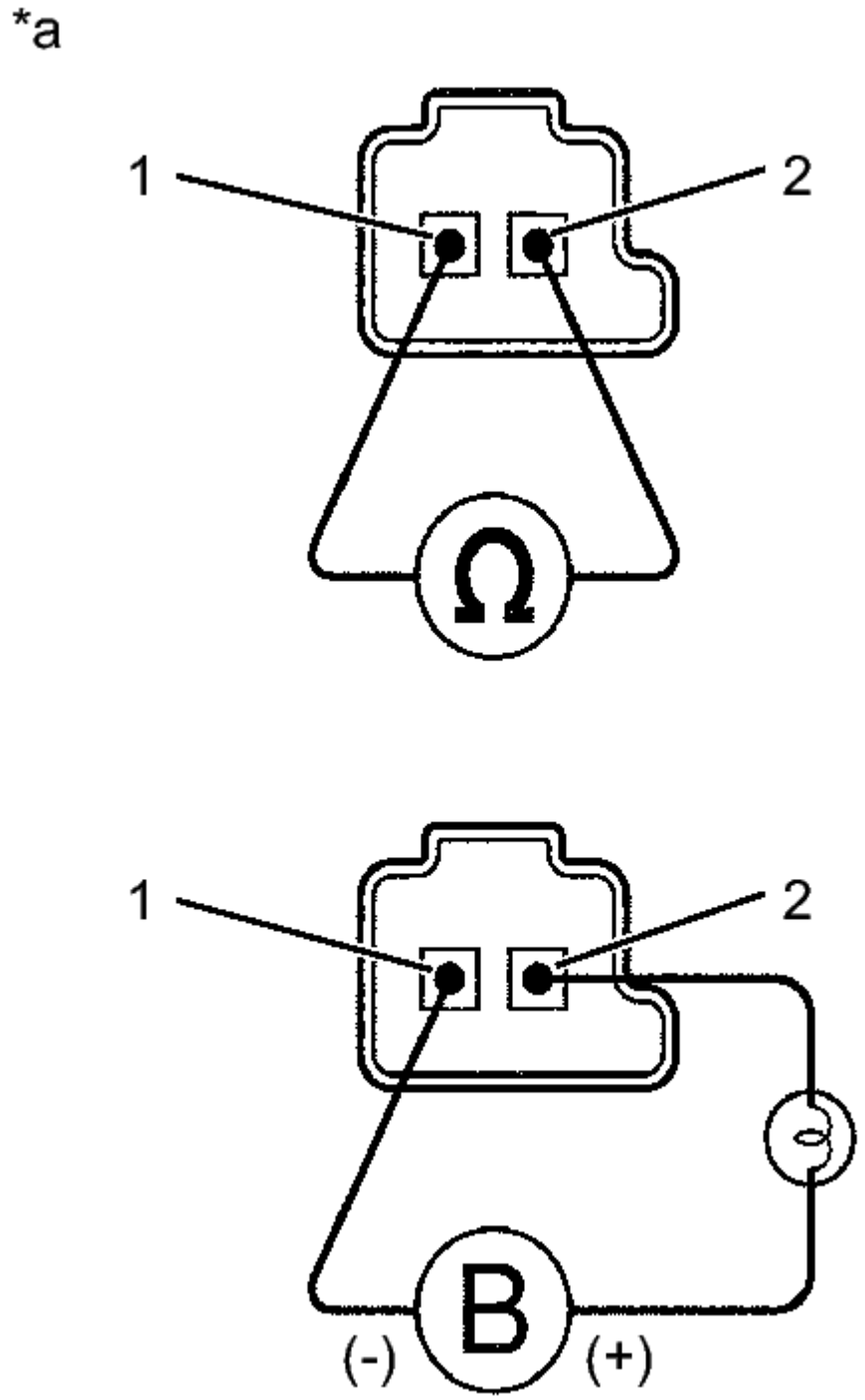

Fig. 47: Measuring Resistance Of Shift Solenoid Valve
Courtesy of TOYOTA MOTOR SALES, U.S.A., INC.

b. Measure the resistance according to the value(s) in the table below.

Standard Resistance

Tester Connection	Condition	Specified Condition
1 - 2	20°C (68°F)	5.0 to 5.6 ohms

TEXT IN ILLUSTRATION

*a	Component without harness connected: (Shift Solenoid Valve SL3)

c. Connect a battery positive (+) lead with a 21 W bulb to terminal 2 and a negative (-) lead to terminal 1 of the solenoid valve connector. Then check that the valve moves and makes an operating sound.

OK

Valve moves and makes an operating sound.

NG --> See step 5

OK --> See step 3

3. **REPLACE TRANSMISSION WIRE. Refer to REMOVAL**
4. **REPLACE TCM. Refer to REMOVAL**
5. **REPLACE SHIFT SOLENOID VALVE SL3. Refer to REMOVAL**

DTC P0989: TRANSMISSION FLUID PRESSURE SENSOR / SWITCH "E" CIRCUIT LOW; DTC P0990: TRANSMISSION FLUID PRESSURE SENSOR / SWITCH "E" CIRCUIT HIGH

DESCRIPTION

No. 3 ATF pressure switch is installed in the lock-up solenoid automatic transmission fluid (ATF) output passage and is used to detect a malfunction in the lock-up solenoid.

DTC No.	DTC Detection Condition	Trouble Area
P0989	No. 3 ATF pressure switch is OFF when lock-up occurs in response to a lock-up request (2 trip detection logic).	
	When both of the following are detected (2 trip detection logic):	

P0990	• No. 3 ATF pressure switch is ON when lock-up does not occur. • Lock-up does not occur when shift solenoid valve (SLU) is requested to turn off in the lock-up range.	• ATF temperature sensor assembly (No. 3 ATF pressure switch) • Transmission wire • TCM

MONITOR DESCRIPTION

The TCM illuminates the MIL and stores the DTC when the TCM detects that the ATF pressure switch is OFF with the lock-up solenoid ON or when the TCM detects that the ATF pressure switch is ON with the lock-up solenoid OFF.

MONITOR STRATEGY

Related DTCs	P0989: No. 3 ATF pressure switch OFF malfunction P0990: No. 3 ATF pressure switch ON malfunction
Required sensors/Components	No. 3 ATF pressure switch
Frequency of operation	Continuous
Duration	P0989: 1.8 seconds P0990 (a): 1.2 seconds P0990 (b): 0.6 seconds
MIL operation	2 driving cycles
Sequence of operation	None

TYPICAL ENABLING CONDITIONS

ALL:

The monitor will run whenever this DTC is not present. (Not circuit malfunction)	P0712, P0713 (ATF temperature sensor circuit (TFT sensor)) P0115, P0117, P0118 (ECT sensor circuit) P0715, P0717 (Input speed sensor (NT) circuit) P0791, P0793 (Output speed sensor (NC) circuit) P0748 (Shift solenoid valve SL1 circuit) P0778 (Shift solenoid valve SL2 circuit) P0798 (Shift solenoid valve SL3 circuit) P2810 (Shift solenoid valve SL4 circuit) P2759 (Shift solenoid valve SLU circuit) P2769, P2770 (Shift solenoid valve SL circuit) P0327, P0328, P0332, P0333 (KCS sensor circuit) P0120, P0121, P0122, P0123, P0220, P0222, P0223, P0604, P0606, P060A, P060B, P060D,

	P060E, P0657, P1607, P2102, P2103, P2111, P2112, P2118, P2119, P2135 ((ETCS) Electronic throttle control system) U0100 (CAN communication system)
Engine coolant temperature	40°C (104°F) or more
Spark advance from Max. retard timing by KCS control	0°CA or more
Transmission range	D
TFT (Transmission fluid temperature)	-10°C (14°F) or more
TFT (Transmission fluid temperature) sensor circuit	No circuit malfunction
ECT (Engine coolant temperature) sensor circuit	No circuit malfunction
Input speed sensor (NT) circuit	No circuit malfunction
Output speed sensor (NC) circuit	No circuit malfunction
Shift solenoid valve SL1 circuit	No circuit malfunction
Shift solenoid valve SL2 circuit	No circuit malfunction
Shift solenoid valve SL3 circuit	No circuit malfunction
Shift solenoid valve SL4 circuit	No circuit malfunction
Shift solenoid valve SLU circuit	No circuit malfunction
Shift solenoid valve SL circuit	No circuit malfunction
KCS (Knock control sensor circuit)	No circuit malfunction
(ETCS) Electronic throttle control system	Not system down
CAN communication system	Not system down
Engine	Starting
TCM selected gear	Not 1st
Vehicle speed	25 km/h (15.5 mph) or more
Input speed (NT) / Output speed (NO) with 1st	3.304 to 7.724
Input speed (NT) / Output speed (NO) with 2nd	1.901 to 2.340
Input speed (NT) / Output speed (NO) with 3rd	1.399 to 1.649
Input speed (NT) / Output speed (NO) with 4th	0.998 to 1.138
Input speed (NT) / Output speed (NO) with 5th	0.705 to 0.836
Input speed (NT) / Output speed (NO) with 6th	0.568 to 0.695

P0989:

TCM lock-up command	ON
Engine speed (NE) - Input speed (NT)	Less than 35 RPM
Throttle valve opening angle	7% or more
Vehicle speed	Less than 100 km/h (62.1 mph)
Shift solenoid valve SLU	Not ON malfunction

P0990:

TCM indicated pressure valve of SLU	0 kPa
TCM lock-up command	OFF

Shift solenoid valve SLU	Not malfunction
Shift solenoid valve SL	Not OFF malfunction

TYPICAL MALFUNCTION THRESHOLDS

P0989:

No. 3 transmission fluid pressure switch	OFF

P0990:

Following conditions are met	(a) and (b)
(a) Engine speed (NE) - Input speed (NT)	35 RPM or more
(b) No. 3 transmission fluid pressure switch	ON

WIRING DIAGRAM

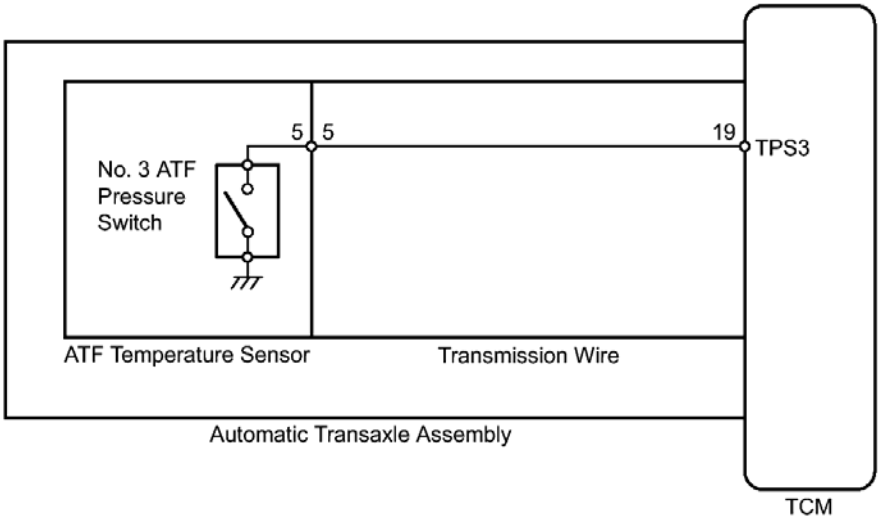

Fig. 48: Transmission Fluid Pressure Sensor / Switch Circuit - Wiring Diagram
Courtesy of TOYOTA MOTOR SALES, U.S.A., INC.

INSPECTION PROCEDURE

NOTE: **Perform the universal trip to clear permanent DTCs. Refer to DTC CHECK / CLEAR .**

PROCEDURE

1. **CHECK OTHER DTC OUTPUT (IN ADDITION TO DTC P0989 OR P0990)**
   a. Connect the Techstream to the DLC3.
   b. Turn the ignition switch to ON.

c. Turn the Techstream on.
d. Enter the following menus: Powertrain / ECT / Trouble Codes.
e. Read the DTCs using the Techstream.

RESULT

Result	Proceed to
Only P0990 is output	A
Only P0989 is output	B
P0989 or P0990 and other DTCs are output	C

HINT:

If a solenoid is stuck OFF, DTCs for several solenoids including the malfunctioning solenoid will be detected.

B --> See step 4

C --> See step 5

A: Go to next step

2. **INSPECT TRANSMISSION WIRE (NO. 3 ATF PRESSURE SWITCH)**
   a. Remove the TCM.

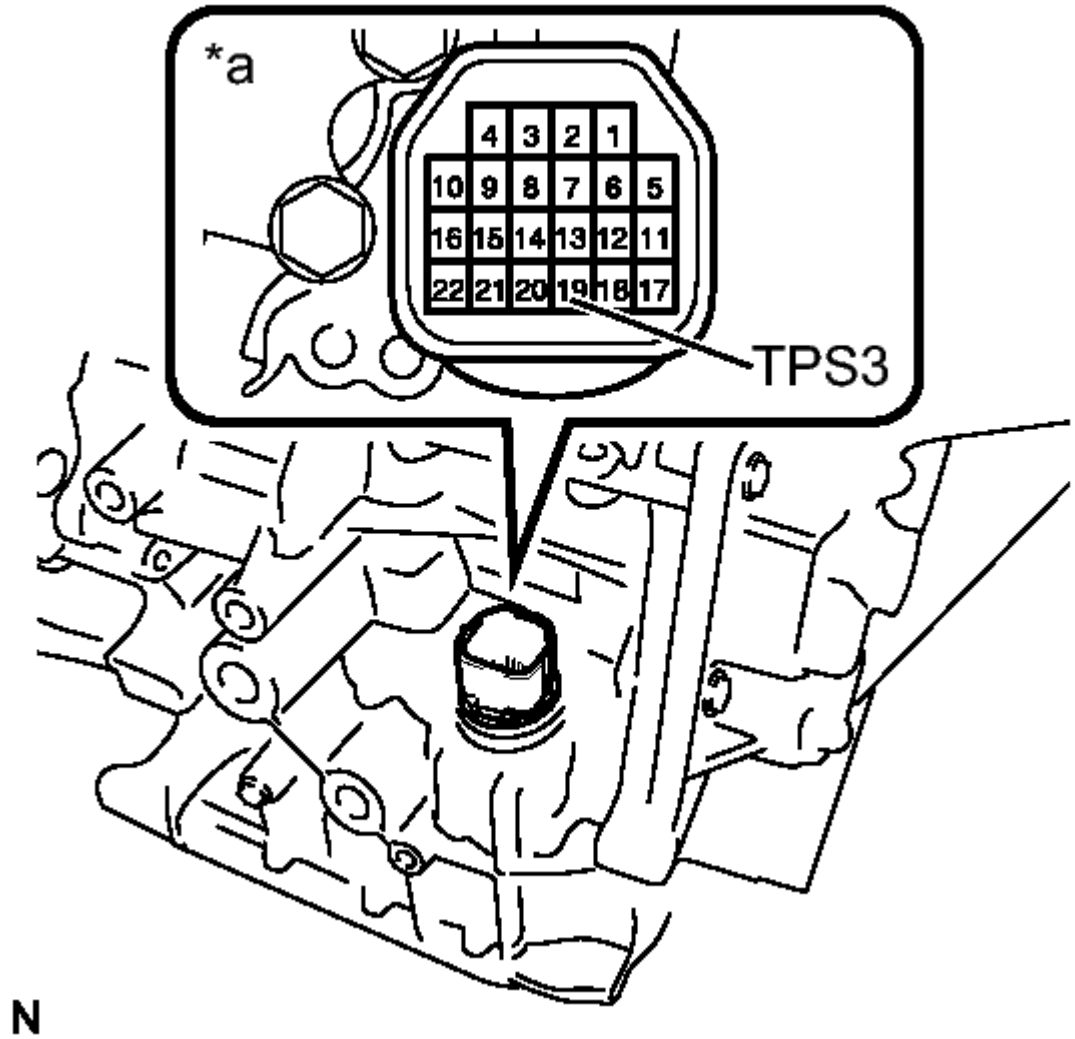

Fig. 49: Inspecting Transmission Wire (No. 3 ATF Pressure Switch)
Courtesy of TOYOTA MOTOR SALES, U.S.A., INC.

b. Measure the resistance according to the value(s) in the table below.

Standard Resistance

Tester Connection	Condition	Specified Condition
19 (TPS3) - Body ground (Valve body assembly) or other	Always	10 kohms or higher

terminals		

TEXT IN ILLUSTRATION

*a	Component without harness connected: (Transmission Wire)

NG --> See step 3

OK --> See step 8

3. **INSPECT ATF TEMPERATURE SENSOR ASSEMBLY (NO. 3 ATF PRESSURE SWITCH)**
   a. Remove the oil strainer assembly.
   b. Disconnect the connector from the ATF temperature sensor assembly.

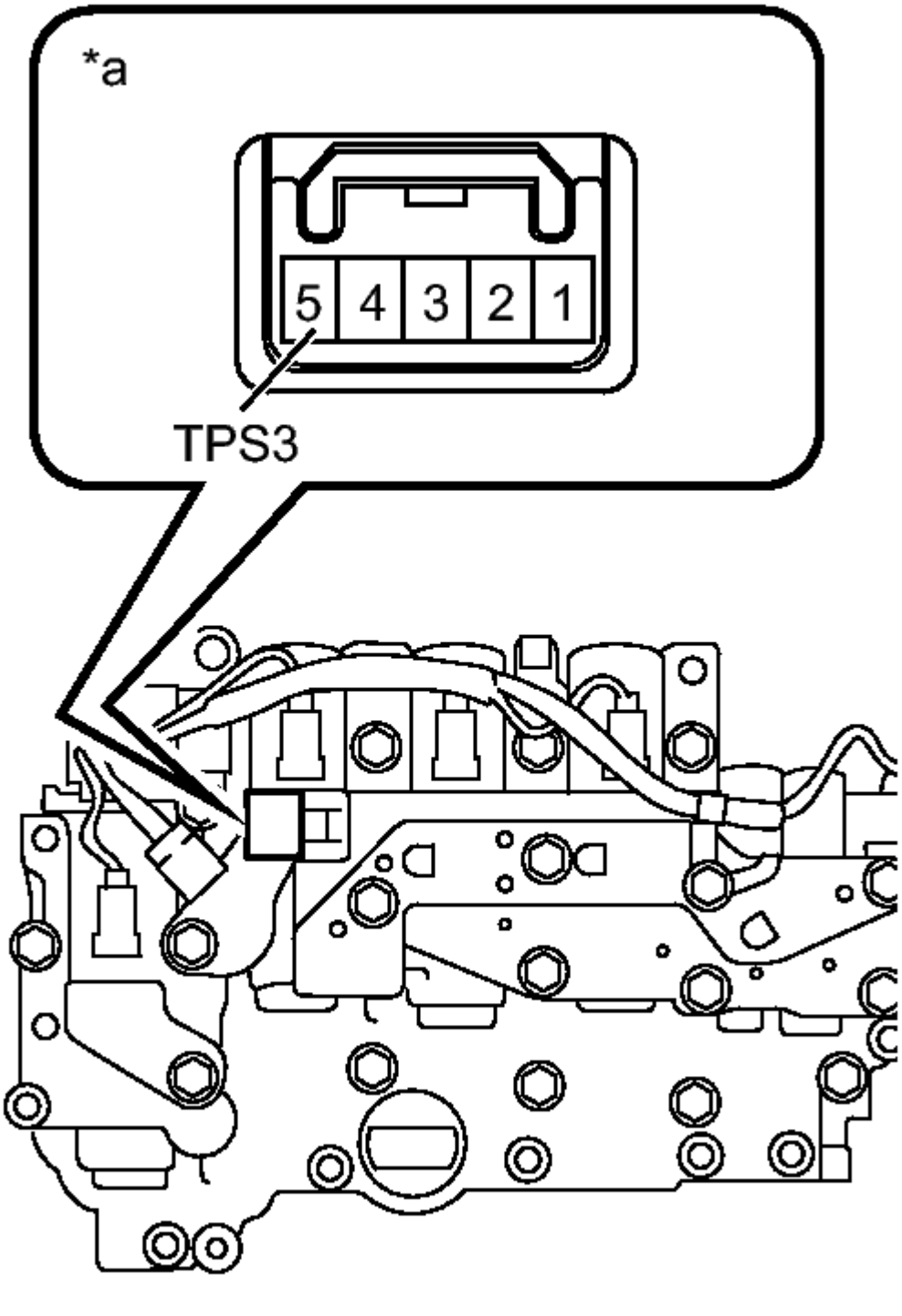

Fig. 50: Inspecting ATF Temperature Sensor Assembly (No. 3 ATF Pressure Switch)
Courtesy of TOYOTA MOTOR SALES, U.S.A., INC.

c. Measure the resistance according to the value(s) in the table below.

Standard Resistance

Tester Connection	Condition	Specified Condition
5 (TPS3) - Body ground (Valve body assembly) or other terminals	Always	10 kohms or higher

TEXT IN ILLUSTRATION

*a	Component without harness connected: (ATF Temperature Sensor)

NG --> See step 10

OK --> See step 6

4. **INSPECT TRANSMISSION WIRE**
   a. Remove the oil strainer assembly.
   b. Remove the TCM.

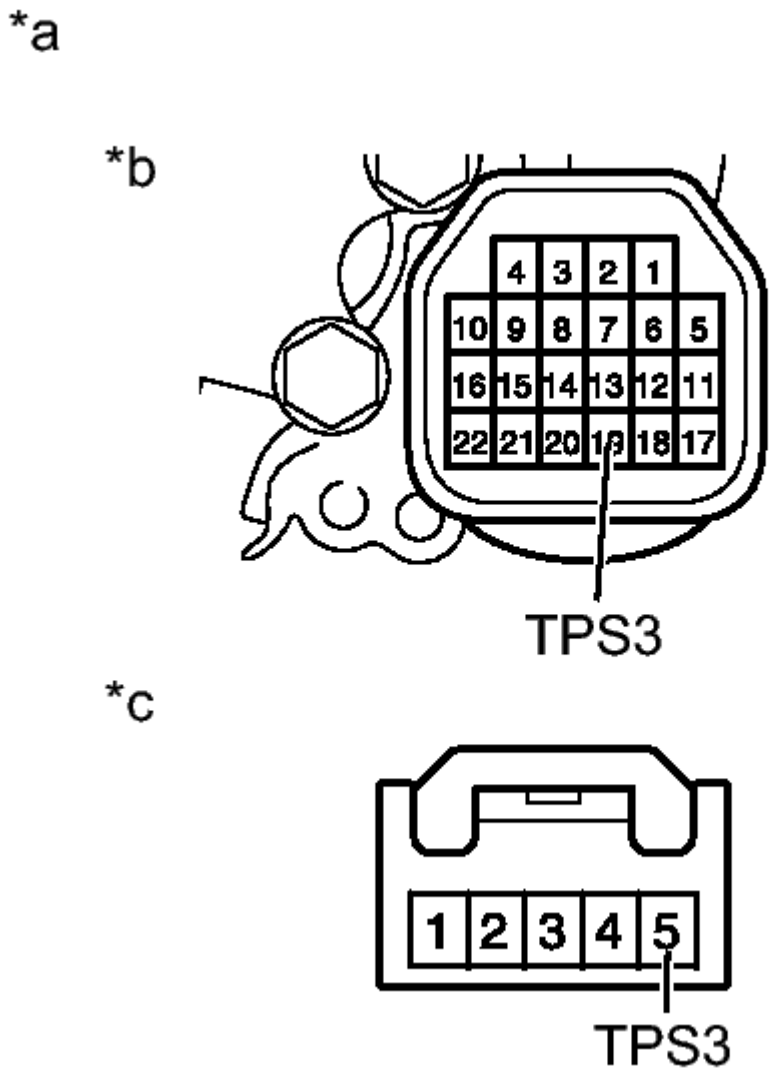

Fig. 51: Measuring Resistance Of Transmission Wire
Courtesy of TOYOTA MOTOR SALES, U.S.A., INC.

c. Disconnect the connector from the ATF temperature sensor assembly.
d. Measure the resistance according to the value(s) in the table below.

Standard Resistance

Tester Connection	Condition	Specified Condition
19 (TPS3) - 5 (TPS3)	Always	Below 1 ohms
5 (TPS3) - Body ground		

(Valve body assembly) or other terminals	Always	10 kohms or higher

TEXT IN ILLUSTRATION

*a	Component without harness connected: (Transmission Wire)
*b	TCM Side:
*c	ATF Temperature Sensor Side:

NG --> See step 6

OK: Go to next step

5. **GO TO DTC CHART. Refer to DIAGNOSTIC TROUBLE CODE CHART**
6. **REPLACE TRANSMISSION WIRE. Refer to REMOVAL**
7. **REPLACE ATF TEMPERATURE SENSOR ASSEMBLY**
   a. Replace ATF temperature sensor. Refer to **REMOVAL** .

NEXT: Go to next step

8. **REPLACE TCM. Refer to REMOVAL**
9. **CHECK DTC OUTPUT**
   a. Connect the Techstream to the DLC3.
   b. Start the engine and turn the Techstream on.
   c. Enter the following menus: Powertrain / ECT / Trouble Codes / Clear.

   HINT:

   Write down the currently output DTCs before clearing them.

   d. Perform the monitor drive pattern. Refer to **MONITOR DRIVE PATTERN** .
   e. Enter the following menus: Powertrain / ECT / Trouble Codes.
   f. Read the DTCs using the Techstream.

   RESULT

Result	Proceed to
DTC not output	A
Only P0989 is output	B

B --> See step 8

A --> END

10. **REPLACE ATF TEMPERATURE SENSOR ASSEMBLY. Refer to REMOVAL**

DTC P2714: PRESSURE CONTROL SOLENOID "D" PERFORMANCE (SHIFT SOLENOID VALVE SLT)

DESCRIPTION

The linear solenoid valve (SLT) controls the transmission line pressure for smooth transmission operation based on signals from the throttle position sensor and the vehicle speed sensor. The TCM adjusts the duty ratio of the SLT solenoid valve to control hydraulic line pressure coming from the primary regulator valve. Appropriate line pressure assures smooth shifting with varying engine outputs.

DTC No.	DTC Detection Condition	Trouble Area
P2714	The TCM detects a malfunction in the shift solenoid valve SLT (ON side) according to the difference in the speed between the turbine and the output shaft, and also by the transmission fluid pressure. (2 trip detection logic)	• Shift solenoid valve SLT remains open • Shift solenoid valve SL1, SL2, SL3 or SL4 remains open or closed • Valve body is blocked • Automatic transaxle (clutch, brake or gear, etc.)

MONITOR DESCRIPTION

The TCM calculates the amount of clutch slip based on the turbine speed, output shaft speed, and gear ratio. If the amount of clutch slip exceeds a specified level, the TCM will set this DTC and illuminate the MIL.

When shift solenoid valve SLT remains on, the line pressure goes down and clutch engagement force decreases.

NOTE: **If driving continues under these conditions, clutches will burn out and the vehicle will no longer be drivable.**

MONITOR STRATEGY

Related DTCs	P2714: Shift solenoid valve SLT/ON malfunction
Required sensors/Components	Shift solenoid valve SLT
Frequency of operation	Continuous
Duration	2 seconds
MIL operation	2 driving cycles
Sequence of operation	None

TYPICAL ENABLING CONDITIONS

ON MALFUNCTION:

The monitor will run whenever this DTC is not present. (Not circuit malfunction)	P0712, P0713 (ATF temperature sensor circuit (TFT sensor)) P0115, P0117, P0118 (ECT sensor circuit) P0715, P0717 (Input speed sensor (NT) circuit) P0791, P0793 (Output speed sensor (NC) circuit) P0748 (Shift solenoid valve SL1 circuit) P0778 (Shift solenoid valve SL2 circuit) P0798 (Shift solenoid valve SL3 circuit) P2810 (Shift solenoid valve SL4 circuit) P2716 (Shift solenoid valve SLT circuit) P0327, P0328, P0332, P0333 (KCS sensor circuit) P0120, P0121, P0122, P0123, P0220, P0222, P0223, P0604, P0606, P060A, P060B, P060D, P060E, P0657, P1607, P2102, P2103, P2111, P2112, P2118, P2119, P2135 ((ETCS) Electronic throttle control system) U0100 (CAN communication system)
Transmission range	D
TFT (Transmission fluid temperature)	-10°C (14°F) or more
TFT (Transmission fluid temperature) sensor circuit	No circuit malfunction
ECT (Engine coolant temperature) sensor circuit	No circuit malfunction
Input speed sensor (NT) circuit	No circuit malfunction
Output speed sensor (NC) circuit	No circuit malfunction
Shift solenoid valve SL1 circuit	No circuit malfunction
Shift solenoid valve SL2 circuit	No circuit malfunction
Shift solenoid valve SL3 circuit	No circuit malfunction
Shift solenoid valve SL4 circuit	No circuit malfunction
Shift solenoid valve SLT circuit	No circuit malfunction
KCS (Knock control sensor circuit)	No circuit malfunction
(ETCS) Electronic throttle control system	Not system down
CAN communication system	Not system down
Engine	Starting
Input turbine torque	100 N*m or more

Input speed (NT)	250 RPM or more
Output speed (NC)	250 RPM or more

TYPICAL MALFUNCTION THRESHOLDS

ON MALFUNCTION

Detection criteria	Threshold
Input speed (NT) - Output speed (NC) x Gear ratio at output speed 1000 RPM (Condition varies with output speed)	75 RPM or more

INSPECTION PROCEDURE

NOTE: **Perform the universal trip to clear permanent DTCs. Refer to DTC CHECK / CLEAR .**

PROCEDURE

1. **CHECK OTHER DTCS OUTPUT (IN ADDITION TO DTC P2714)**
   a. Connect the Techstream to the DLC3.
   b. Turn the ignition switch to ON.
   c. Turn the Techstream on.
   d. Enter the following menus: Powertrain / ECT / Trouble Codes.
   e. Read the DTCs using the Techstream.

   RESULT

Result	Proceed to
P2714 and other DTCs are output	A
Only P2714 is output	B

   HINT:

   If a solenoid is stuck ON, DTCs for several solenoids including the malfunctioning solenoid will be detected.

B --> See step 8

A: Go to next step

2. **PERFORM ACTIVE TEST USING TECHSTREAM (SHIFT SOLENOID VALVE SLT)**

NOTE:

- **Perform the test at the normal operating ATF (Automatic Transmission Fluid) temperature: 50 to 80°C (122 to 176°F)**
- **Be sure to prevent SST hose from interfering with the exhaust pipe.**
- **This check must be conducted after checking and adjusting the engine.**
- **Perform the test with the A/C OFF.**

HINT:

Using the Techstream to perform Active Tests allows relays, VSVs, actuators and other items to be operated without removing any parts. This non-intrusive functional inspection can be very useful because intermittent operation may be discovered before parts or wiring is disturbed. Performing Active Tests early in troubleshooting is one way to save diagnostic time. Data List information can be displayed while performing Active Tests.

a. Turn the ignition switch off.
b. Lift the vehicle up.
c. Remove the test plug on the transmission case center right side and connect SST.

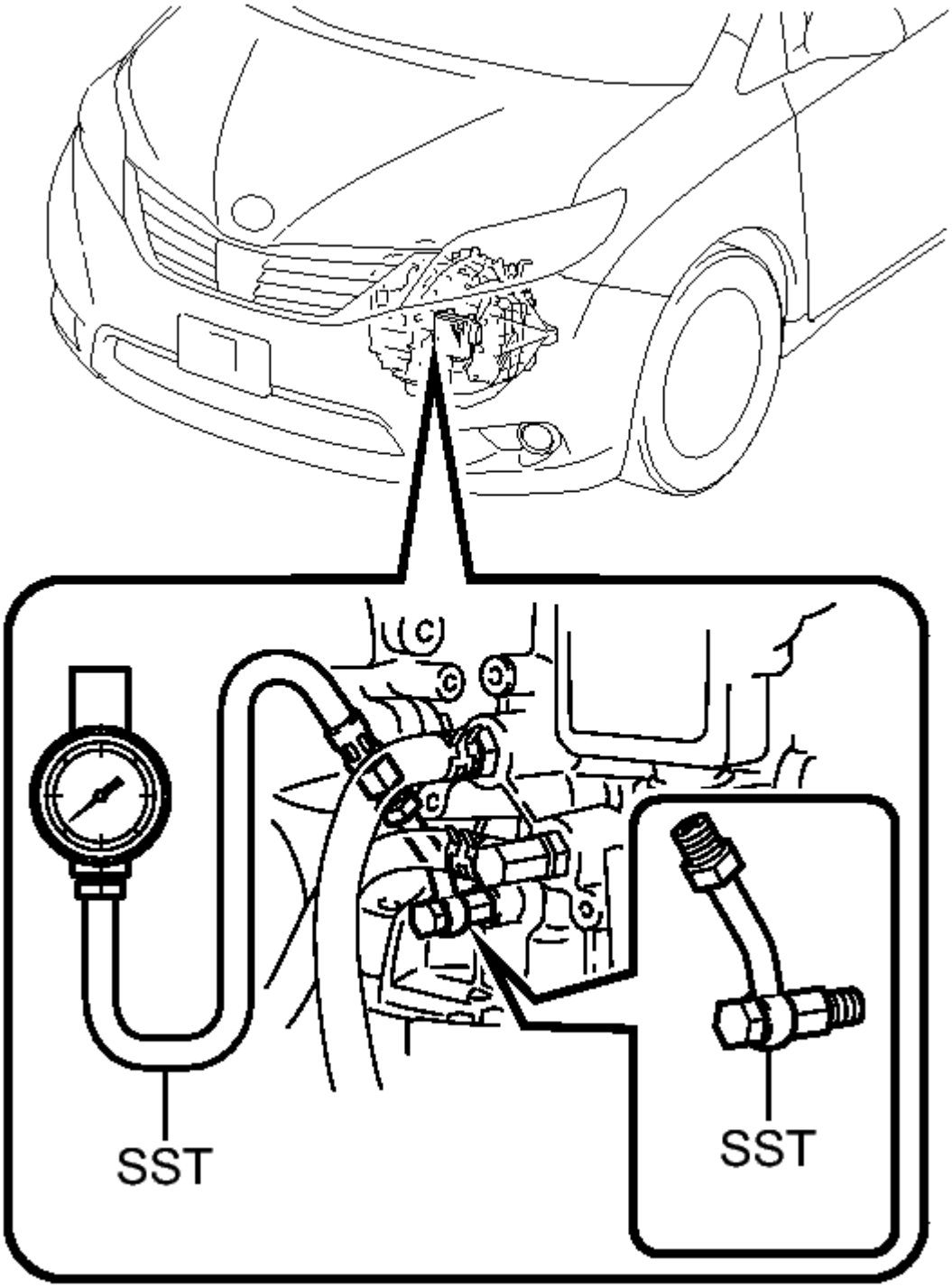

Fig. 52: Measuring Line Pressure Using SST
Courtesy of TOYOTA MOTOR SALES, U.S.A., INC.

- **SST: 09992-00095**
  09992-00231

09992-00271

d. Lower the vehicle.
e. Fully apply the parking brake and chock the 4 wheels.
f. Connect the Techstream to the DLC3.
g. Start the engine.
h. Warm up the Automatic Transmission Fluid (ATF).
i. Measure the line pressure when the engine is idling.
j. Turn the Techstream on.
k. Enter the following menus: Powertrain / ECT / Active Test.
l. Follow the instructions on the Techstream and perform the Active Test.
m. Measure the line pressure with SST.

ECT

Tester Display	Test Part	Control Range	Diagnostic Note
Activate the Solenoid (SLT)*	Operates shift solenoid SLT to raise the line pressure.	ON/OFF **HINT:** ON: No action (normal operation) OFF: Line pressure up (When the Active Test of "Activate the Solenoid (SLT)" is performed, the TCM commands the SLT solenoid to turn off).	[Vehicle Condition] • Vehicle Stopped • IDL: ON

*: "Activate the Solenoid (SLT)" in the Active Test is performed to check that the line pressure changes by connecting the SST to the automatic transaxle. The same SST is used in the Hydraulic Test. Refer to **HYDRAULIC TEST** as well.

HINT:

The pressure values in Active Test and Hydraulic Test are different from each other.

OK

The line pressure changes as specified when performing the Active Test.

NG --> See step 8

OK: Go to next step

3. **PERFORM ACTIVE TEST USING TECHSTREAM (CONTROL THE SHIFT POSITION)**

NOTE: This test should always be performed with at least 2 people.

a. Warm up the engine.
b. Turn the ignition switch off.
c. Connect the Techstream to the DLC3.
d. Turn the ignition switch to ON.
e. Turn the Techstream on.
f. Enter the following menus: Powertrain / ECT / Active Test.
g. According to the display on the Techstream, perform the Active Test.

HINT:

Comparing the gear commanded by the Active Test with the actual gear enables confirmation of the problem. Refer to **FAIL-SAFE CHART** .

ECT

Tester Display	Test Part	Control Range	Diagnostic Note
Control the Shift Position	Operates the shift solenoid valves to allow gears to selected manually.	• Press "-->" button: Upshift occurs • Press "<--" button: Downshift occurs	Can be used to check the operation of the shift solenoid valves.

NOTE:

- **This test can be conducted when the vehicle is stopped.**
- **When shifting gears using the Active Test function, do not operate the accelerator pedal for 2 seconds before and after shifting gears.**

HINT:

The gear commanded by the TCM is shown in the Data List / Shift Status display on the Techstream.

h. Check the vehicle speed and the gear when the engine speed is 1000 RPM.

HINT:

Because the torque converter clutch has not engaged, it may be difficult to obtain the speeds specified in 4th, 5th, and 6th gear, however a difference of speed should still be evident following each gear change.

Standard

1st	2nd	3rd	4th	5th	6th
8 to 12 km/h (5 to 7.5 mph)	15 to 19 km/h (9.3 to 11.8 mph)	21 to 25 km/h (13.0 to 15.5 mph)	31 to 35 km/h (19.3 to 21.7 mph)	44 to 48 km/h (27.3 to 29.8 mph)	52 to 56 km/h (32.3 to 34.8 mph)

i. Compare the TCM commanded gear and the actual gear.

RESULT

Actuator Gear during Malfunction		TCM Commanded Gear						Proceed to
		1st	2nd	3rd	4th	5th	6th	
Shift solenoid SL1	Stuck ON	1st	2nd	3rd	4th	4th	4th	A
	Stuck OFF	N*1	N*1	N*1	N*1	5th	6th	
Shift solenoid SL2	Stuck ON	4th	4th	4th	4th	5th	6th	B
	Stuck OFF	1st	2nd	3rd	1st	N*1	N*1	
Shift solenoid SL3	Stuck ON	2nd	2nd	3rd	4th	5th	6th	C
	Stuck OFF	1st	1st	3rd	4th	5th	N*1	
Shift solenoid SL4	Stuck ON*3	3rd	3rd	3rd	4th	5th	5th	D
	Stuck OFF	1st	2nd	1st	4th	N*1	6th	
Shift solenoid SLT	Stuck ON	N*2	N*2	N*2	N*2	N*2	N*2	E
	Stuck OFF*3	1st	2nd	3rd	4th	5th	6th	

HINT:

- *1: Neutral

- *2: If shift solenoid SLT is stuck on, the line pressure will be low. Therefore, the amount of torque that can be transmitted by each gear is lower than the normal limit. When the engine power exceeds this lowered limit, the engine speed will increase freely.
- *3: When shift solenoid SLT is stuck off, gear shifting is normal.

A --> See step 4

B --> See step 5

C --> See step 6

D --> See step 7

E: Go to next step

4. **GO TO DTC CHART (RELATED SHIFT SOLENOID VALVE (SL1) PERFORMANCE DTC P0746). Refer to DTC P0746: Pressure Control Solenoid "A" Performance (Shift Solenoid Valve SL1)**
5. **GO TO DTC CHART (RELATED SHIFT SOLENOID VALVE (SL2) PERFORMANCE DTC P0776). Refer to DTC P0776: Pressure Control Solenoid "B" Performance (Shift Solenoid Valve SL2)**
6. **GO TO DTC CHART (RELATED SHIFT SOLENOID VALVE (SL3) PERFORMANCE DTC P0796). Refer to DTC P0796: Pressure Control Solenoid "C" Performance (Shift Solenoid Valve SL3)**
7. **GO TO DTC CHART (RELATED SHIFT SOLENOID VALVE (SL4) PERFORMANCE DTC P2808). Refer to DTC P2808: Pressure Control Solenoid "G" Performance (Shift Solenoid Valve SL4)**
8. **INSPECT SHIFT SOLENOID VALVE SLT**
   a. Remove shift solenoid valve SLT.

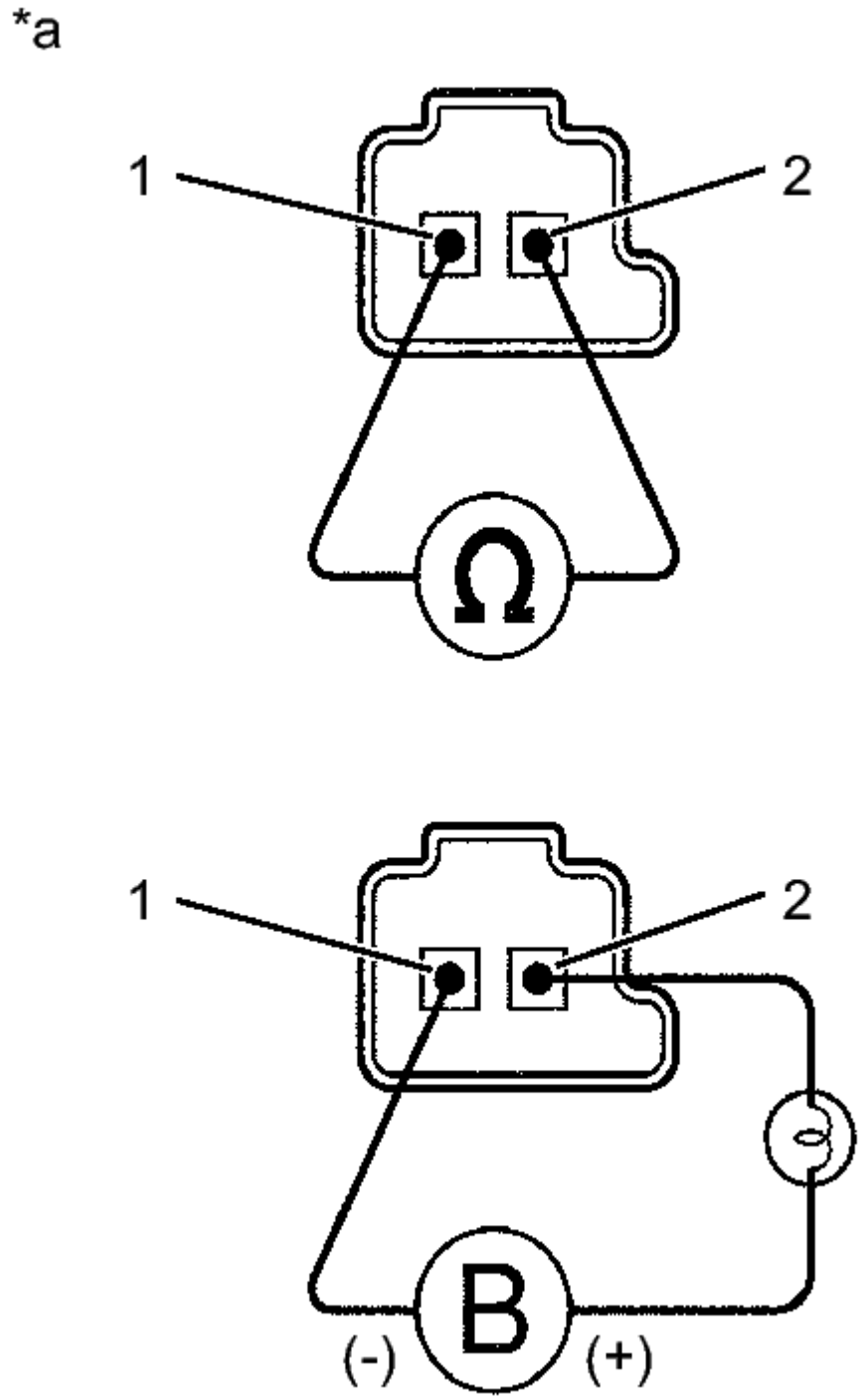

Fig. 53: Measuring Resistance Of Shift Solenoid Valve
Courtesy of TOYOTA MOTOR SALES, U.S.A., INC.

b. Measure the resistance according to the value(s) in the table below.

Standard Resistance

Tester Connection	Condition	Specified Condition
1 - 2	20°C (68° F)	5.0 to 5.6 ohms

TEXT IN ILLUSTRATION

*a	Component without harness connected: (Shift Solenoid Valve SLT)

c. Connect a battery positive (+) lead with a 21 W bulb to terminal 2 and a negative (-) lead to terminal 1 of the solenoid valve connector. Then check that the valve moves and makes an operating sound.

OK

Valve moves and makes an operating sound.

NG --> See step 11

OK: Go to next step

9. **INSPECT TRANSMISSION VALVE BODY ASSEMBLY**
   a. Check the transmission valve body assembly. Refer to **REMOVAL** .

OK

There are no foreign objects on each valve and they operate smoothly.

NG --> See step 12

OK --> See step 10

10. **REPLACE AUTOMATIC TRANSMISSION ASSEMBLY. Refer to REMOVAL**
11. **REPLACE SHIFT SOLENOID VALVE SLT. Refer to REMOVAL**
12. **REPAIR OR REPLACE TRANSMISSION VALVE BODY ASSEMBLY. Refer to REMOVAL**

DTC P2716: PRESSURE CONTROL SOLENOID "D" ELECTRICAL (SHIFT SOLENOID VALVE SLT)

DESCRIPTION

Refer to DTC P2714. Refer to **DESCRIPTION**.

DTC No.	DTC Detection Condition	Trouble Area
P2716	Open or short is detected in shift solenoid valve SLT circuit for 1 second or more while driving (1 trip detection logic).	• Open or short in shift solenoid valve SLT circuit • Shift solenoid valve SLT • Transmission wire • TCM

MONITOR DESCRIPTION

When an open or short in the linear solenoid valve (SLT) circuit is detected, the TCM interprets this as a fault. The TCM will turn on the MIL and store the DTC.

MONITOR STRATEGY

Related DTCs	P2716: Shift solenoid valve SLT/Range check
Required sensors/Components	Shift solenoid valve SLT
Frequency of operation	Continuous
Duration	1 second
MIL operation	Immediately
Sequence of operation	None

TYPICAL ENABLING CONDITIONS

ALL:

The monitor will run whenever this DTC is not present	None
Solenoid current cut status	Not cut
Ignition switch	ON
Starter	OFF

MALFUNCTION (A):

Battery voltage	12 V or more
Target current	1 A

MALFUNCTION (B):

Battery voltage	10 V or more and less than 12 V
Target current	0.75 A

MALFUNCTION (C):

Battery voltage	8 V or more

Target current	0.25 A

MALFUNCTION (D):

Battery voltage	11 V or more
Target current	1 A or more

MALFUNCTION (E):

Battery voltage	11 V or more
Target current	0.1 A or more
Commanded voltage - Last commanded voltage	Less than 0.0000191 V

TYPICAL MALFUNCTION THRESHOLDS

MALFUNCTION (A) AND (B):

Output signal duty	100% or more

MALFUNCTION (C):

Output signal duty	0% or less

MALFUNCTION (D):

Output signal monitor	No signal

MALFUNCTION (E):

Commanded voltage - Last commanded voltage	0.035 V or more

COMPONENT OPERATING RANGE

Output signal duty	Less than 100%

WIRING DIAGRAM

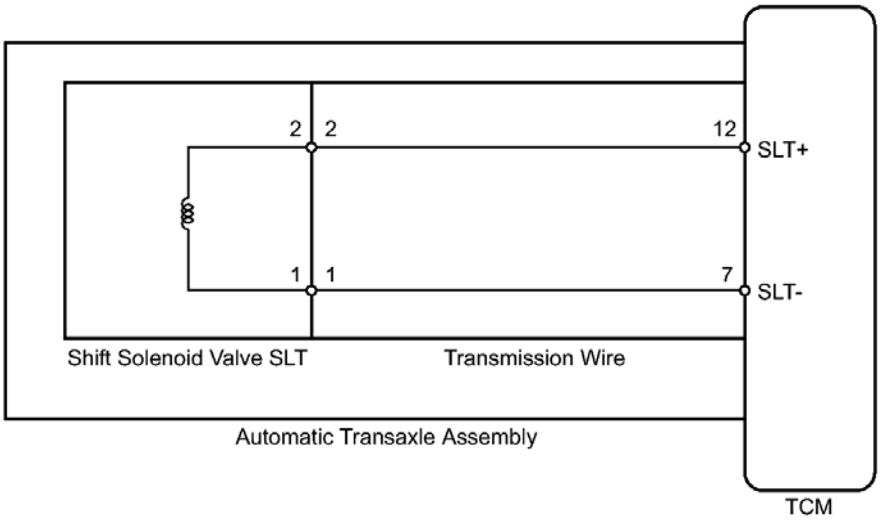

Fig. 54: Shift Solenoid Valve SLT Circuit - Wiring Diagram
Courtesy of TOYOTA MOTOR SALES, U.S.A., INC.

INSPECTION PROCEDURE

NOTE: **Perform the universal trip to clear permanent DTCs. Refer to DTC CHECK / CLEAR .**

PROCEDURE

1. **INSPECT TRANSMISSION WIRE (SHIFT SOLENOID VALVE SLT)**
   a. Remove the TCM from the transaxle.

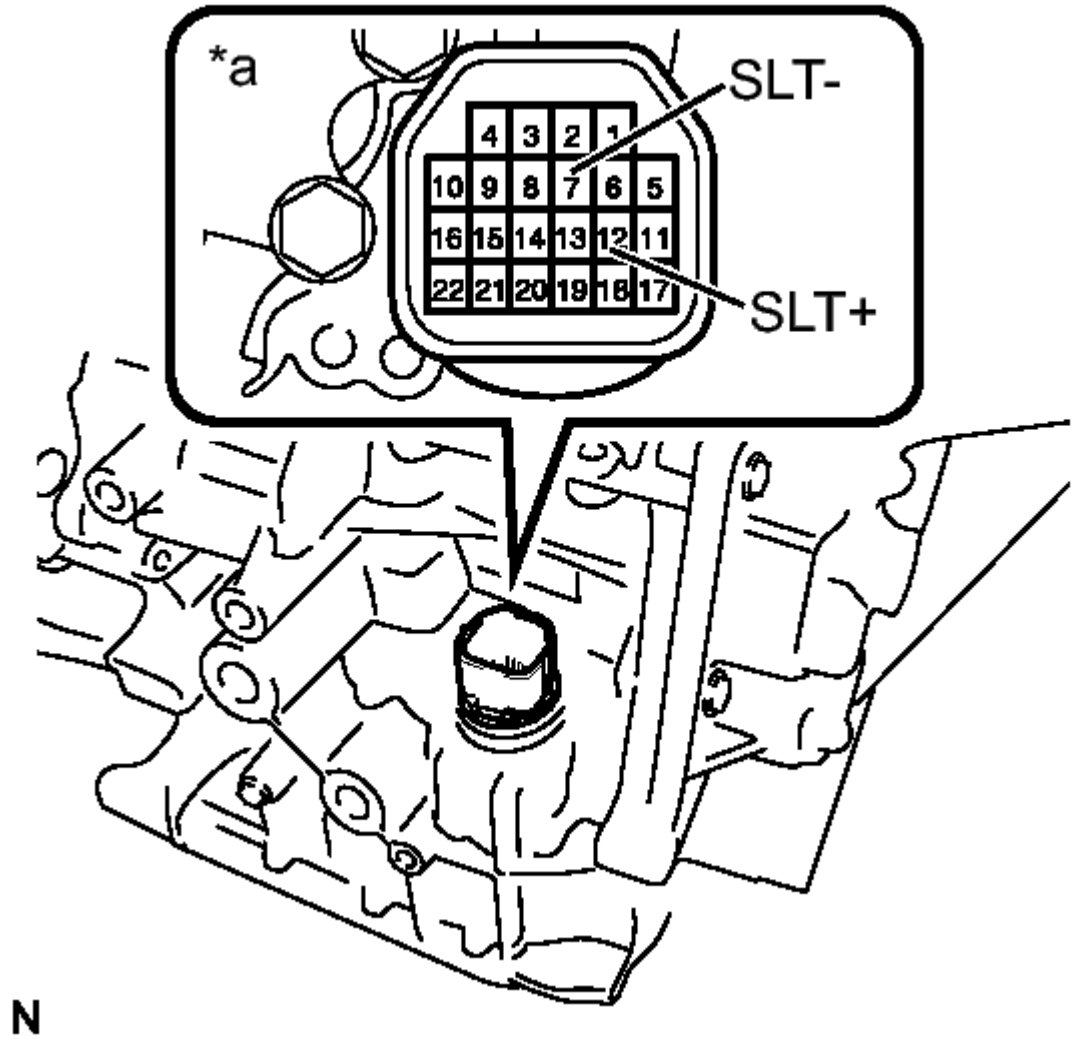

Fig. 55: Inspecting Transmission Wire (Shift Solenoid Valve SLT)
Courtesy of TOYOTA MOTOR SALES, U.S.A., INC.

b. Measure the resistance according to the value(s) in the table below.

Standard Resistance

Tester Connection	Condition	Specified Condition
12 (SLT+) - 7 (SLT-)	20°C (68° F)	5.0 to 5.6 ohms
12 (SLT+) - Body ground	Always	10 kohms or higher
7 (SLT-) - Body	Always	10 kohms

ground		or higher
12 (SLT+) - All other terminals except 7 (SLT-)	Always	10 kohms or higher
7 (SLT-) - All other terminals except 12 (SLT+)	Always	10 kohms or higher

TEXT IN ILLUSTRATION

*a	Component without harness connected: (Transmission Wire)

NG --> See step 2

OK --> See step 4

2. **INSPECT SHIFT SOLENOID VALVE SLT**
   a. Remove shift solenoid valve SLT.

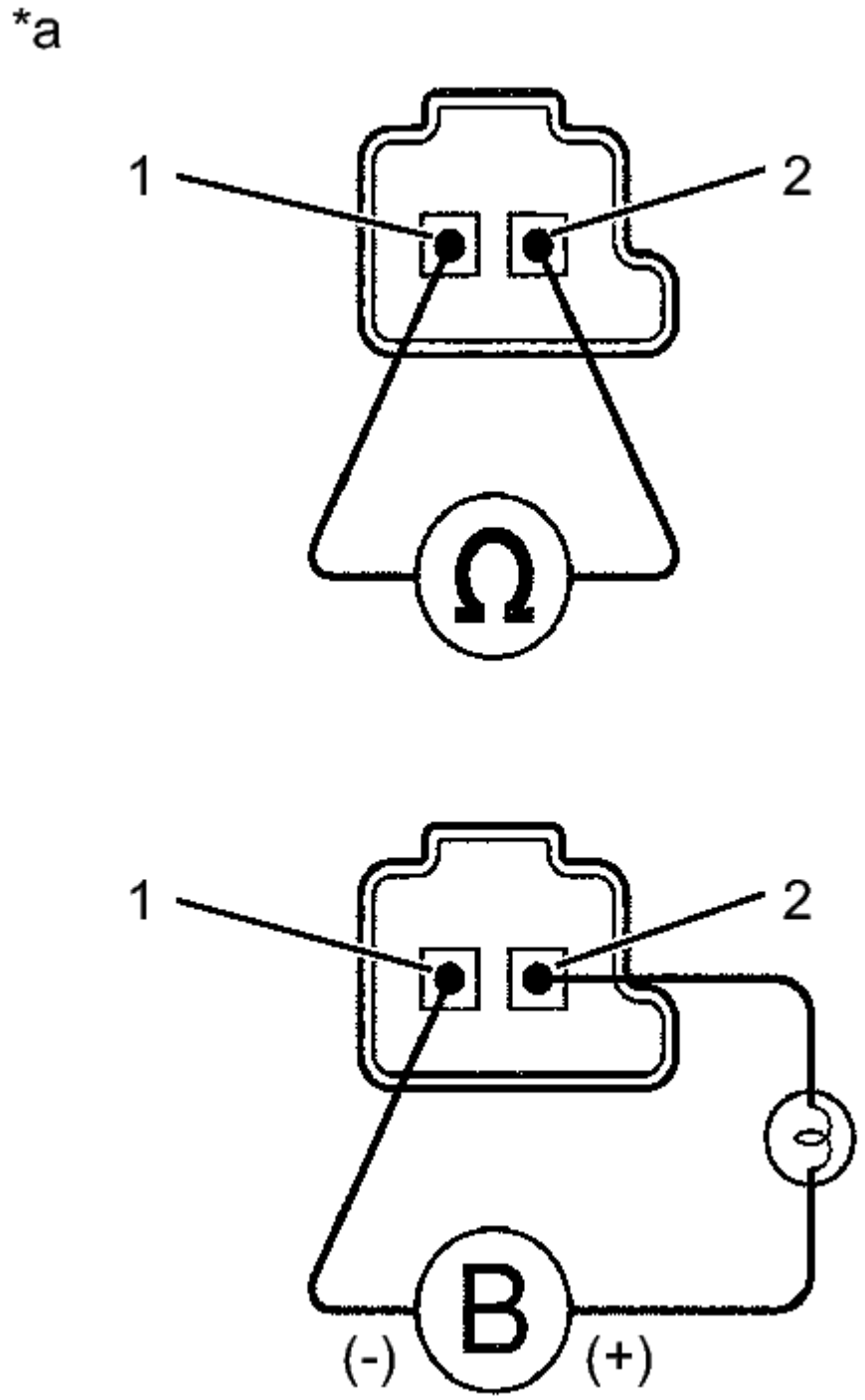

Fig. 56: Measuring Resistance Of Shift Solenoid Valve
Courtesy of TOYOTA MOTOR SALES, U.S.A., INC.

b. Measure the resistance according to the value(s) in the table below.

Standard Resistance

Tester Connection	Condition	Specified Condition
1 - 2	20°C (68° F)	5.0 to 5.6 ohms

TEXT IN ILLUSTRATION

*a	Component without harness connected: (Shift Solenoid Valve SLT)

c. Connect a battery positive (+) lead with a 21 W bulb to terminal 2 and a negative (-) lead to terminal 1 of the solenoid valve connector. Then check that the valve moves and makes an operating sound.

OK

Valve moves and makes an operating sound.

NG --> See step 5

OK --> See step 3

3. **REPLACE TRANSMISSION WIRE. Refer to REMOVAL**
4. **REPLACE TCM. Refer to REMOVAL**
5. **REPLACE SHIFT SOLENOID VALVE SLT. Refer to REMOVAL**

DTC P2757: TORQUE CONVERTER CLUTCH PRESSURE CONTROL SOLENOID PERFORMANCE (SHIFT SOLENOID VALVE SLU)

DESCRIPTION

The TCM uses the signals from the throttle position sensor, air-flow meter, input speed sensor (NT), output speed sensor (NC) and crankshaft position sensor (NE) to monitor the engagement condition of the lock-up clutch.

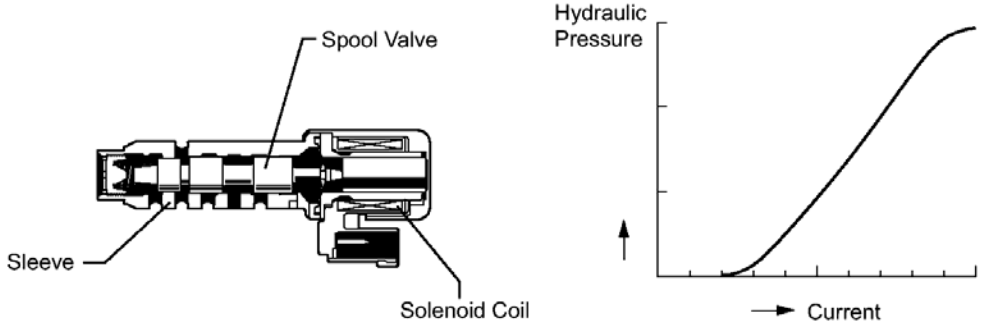

Fig. 57: Identifying Shift Solenoid Valve SLU Components And Hydraulic Line Pressure Graph
Courtesy of TOYOTA MOTOR SALES, U.S.A., INC.

The TCM compares the engagement condition of the lock-up clutch with the lock-up schedule in the TCM memory to detect shift solenoid valve SLU, valve body and torque converter clutch mechanical problems.

DTC No.	DTC Detection Condition	Trouble Area
P2757	When both of the following are detected (2 trip detection logic): • Lock-up does not occur when requested. • No. 3 ATF pressure switch is OFF. When both of the following are detected (2 trip detection logic): • No. 3 ATF pressure switch is ON when lock-up does not occur. • Lock-up occurs when shift solenoid valve SLU is requested to turn on in the lock-up range.	• Shift solenoid valve SLU remains open or closed • Valve body is blocked • Torque converter assembly • Automatic transaxle (clutch, brake or gear, etc.) • Line pressure is too low

MONITOR DESCRIPTION

Torque converter lock-up is controlled by the TCM based on the speed sensor (NT), speed sensor (NC), engine speed (NE), engine load, engine temperature, vehicle speed, automatic transmission fluid (ATF) temperature, and gear selection. The TCM determines the lock-up status of the torque converter by comparing the engine speed (NE) to the input speed (NT). The TCM calculates the actual transmission gear by comparing input speed (NT) to output speed (NC). When conditions are appropriate, the TCM requests "lock-up" by applying control voltage to shift solenoid SLU. When SLU is turned on, it applies pressure to the lock-up relay valve and locks the torque converter assembly.

If the TCM detects no lock-up after lock-up has been requested or if it detects lock-up when it is not requested, the TCM interprets this as a fault in shift solenoid valve SLU or lock-up system performance.

The TCM will turn on the MIL and store the DTC.

Example:

When any of the following is met, the system judges it as a malfunction.

- There is a difference in rotation (speed) between the input side (engine speed) and output side (input turbine speed) of the torque converter when the TCM commands lock-up.

  (Engine speed is at least 70 RPM greater than input turbine speed.)

- There is no difference in rotation (speed) between the input side (engine speed) and output side (input turbine speed) of the torque converter when the TCM commands lock-up off.

  (The difference between engine speed and input turbine speed is less than 20 RPM.)

MONITOR STRATEGY

Related DTCs	P2757: Shift solenoid valve SLU OFF malfunction Shift solenoid valve SLU ON malfunction
Required sensors/Components	Shift solenoid valve SLU
Frequency of operation	Continuous
Duration	OFF malfunction (a): 3.5 seconds OFF malfunction (b): 0.05 seconds ON malfunction (a): 1.8 seconds ON malfunction (b): 0.6 seconds
MIL operation	2 driving cycles
Sequence of operation	None

TYPICAL ENABLING CONDITIONS

THE FOLLOWING ITEMS ARE COMMON TO ALL CONDITIONS BELOW.

The monitor will run whenever this DTC is not	P0712, P0713 (ATF temperature sensor circuit (TFT sensor)) P0115, P0117, P0118 (ECT sensor circuit) P0715, P0717 (Input speed sensor (NT) circuit) P0791, P0793 (Output speed sensor (NC) circuit) P0748 (Shift solenoid valve SL1 circuit) P0778 (Shift solenoid valve SL2 circuit) P0798 (Shift solenoid valve SL3 circuit)

present. (Not circuit malfunction)	P2810 (Shift solenoid valve SL4 circuit) P2759 (Shift solenoid valve SLU circuit) P2769, P2770 (Shift solenoid valve SL circuit) P0327, P0328, P0332, P0333 (KCS sensor circuit) P0120, P0121, P0122, P0123, P0220, P0222, P0223, P0604, P0606, P060A, P060B, P060D, P060E, P0657, P1607, P2102, P2103, P2111, P2112, P2118, P2119, P2135 ((ETCS) Electronic throttle control system) U0100 (CAN communication system)
Engine coolant temperature	40°C (104°F) or more
Spark advance from Max. retard timing by KCS control	0°CA or more
Transmission range	D
TFT (Transmission fluid temperature)	-10°C (14°F) or more
TFT (Transmission fluid temperature) sensor circuit	No circuit malfunction
ECT (Engine coolant temperature) sensor circuit	No circuit malfunction
Input speed sensor (NT) circuit	No circuit malfunction
Output speed sensor (NC) circuit	No circuit malfunction
Shift solenoid valve SL1 circuit	No circuit malfunction
Shift solenoid valve SL2 circuit	No circuit malfunction
Shift solenoid valve SL3 circuit	No circuit malfunction
Shift solenoid valve SL4 circuit	No circuit malfunction
Shift solenoid valve SLU circuit	No circuit malfunction
Shift solenoid valve SL circuit	No circuit malfunction
KCS (Knock control sensor circuit)	No circuit malfunction
(ETCS) Electronic throttle control system	Not system down
CAN communication system	Not system down
Engine	Starting
TCM selected gear	Not 1st
Vehicle speed	25 km/h (15.5 mph) or more
Input speed (NT) / Output speed (NO) with 1st	3.304 to 7.724
Input speed (NT) / Output speed (NO) with 2nd	1.901 to 2.340
Input speed (NT) / Output speed (NO) with 3rd	1.399 to 1.649
Input speed (NT) / Output speed (NO) with 4th	0.998 to 1.138
Input speed (NT) / Output speed (NO) with 5th	0.705 to 0.836
Input speed (NT) / Output speed (NO) with 6th	0.568 to 0.695

OFF MALFUNCTION:

TCM lock-up command	ON
Duration time from lock-up on command	3 seconds or more
Shift solenoid valve SLU	Not ON malfunction

ON MALFUNCTION:

TCM lock-up command	OFF (SLU pressure: less than 4 kPa (0.04 kgf/cm^2 , 0.6 psi)
Duration time from lock-up on command	0.064 seconds or more
Throttle valve opening angle	7% or more
Vehicle speed	Less than 60 km/h (37.3 mph)
Shift solenoid valve SLU	Not malfunction (P2757)
Shift solenoid valve SL	Not OFF malfunction (P0741)
No. 3 ATF pressure switch	Not ON malfunction (P0990)

TYPICAL MALFUNCTION THRESHOLDS

OFF MALFUNCTION:

Following conditions are met	(a) and (b)
(a) Engine speed (NE) - Input speed (NT)	70 RPM or more
(b) No. 3 ATF pressure switch	OFF

ON MALFUNCTION:

Following conditions are met	(a) and (b)
(a) Engine speed (NE) - Input speed (NT)	Less than 35 RPM
(b) No. 3 ATF pressure switch	ON

COMPONENT OPERATING RANGE

Input speed sensor (NT)	Input speed is equal to engine speed when lock-up is ON.

INSPECTION PROCEDURE

NOTE: **Perform the universal trip to clear permanent DTCs. Refer to DTC CHECK / CLEAR .**

HINT:

Using the Techstream to perform Active Tests allows relays, VSVs, actuators and other items to be operated without removing any parts. This non-intrusive functional inspection can be very useful because intermittent operation may be discovered before parts or wiring is disturbed. Performing Active Tests early in troubleshooting is one way to save diagnostic time. Data List information can be displayed while performing Active Tests.

1. **ACTIVE TEST**

a. Warm up the engine.
b. Turn the ignition switch off.
c. Connect the Techstream to the DLC3.
d. Turn the ignition switch to ON.
e. Turn the Techstream on.
f. Enter the following menus: Powertrain / ECT / Active Test.
g. According to the display on the Techstream, perform the Active Test.

ECT

Tester Display	Test Part	Control Range	Diagnostic Note
Activate the Lock Up	Control the shift solenoid SLU and SL to set the automatic transaxle to the lock-up condition.	ON/OFF	Can be used to check SLU and SL solenoid operation. [Vehicle Condition] Vehicle speed: 60 km/h (37 mph) or more

HINT:

This test can be conducted when the vehicle speed is 60 km/h (37 mph) or more.

h. Lightly depress the accelerator pedal and check that the engine speed does not change abruptly.

HINT:

- When changing the accelerator pedal opening angle while driving, if the engine speed does not change, lock-up is on.
- Slowly release, but not fully, the accelerator pedal in order to decelerate. (Fully releasing the pedal will close the throttle valve and lock-up may be turned off.)

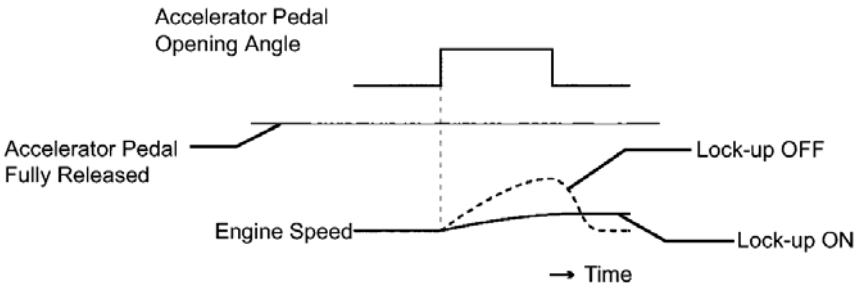

G23400

Fig. 58: Accelerator Pedal Opening Angle Graph
Courtesy of TOYOTA MOTOR SALES, U.S.A., INC.

PROCEDURE

1. **CHECK OTHER DTCS OUTPUT (IN ADDITION TO DTC P2757)**
   a. Connect the Techstream to the DLC3.
   b. Turn the ignition switch to ON.
   c. Turn the Techstream on.
   d. Enter the following menus: Powertrain / ECT / Trouble Codes.
   e. Read the DTCs using the Techstream.

   RESULT

Result	Proceed to
Only P2757 is output	A
P2757 and other DTCs are output	B

   HINT:

   If any other codes besides P2757 are output, perform troubleshooting for those DTCs first.

B --> See step 6

A: Go to next step

2. **INSPECT SHIFT SOLENOID VALVE SLU**
   a. Remove shift solenoid valve SLU.

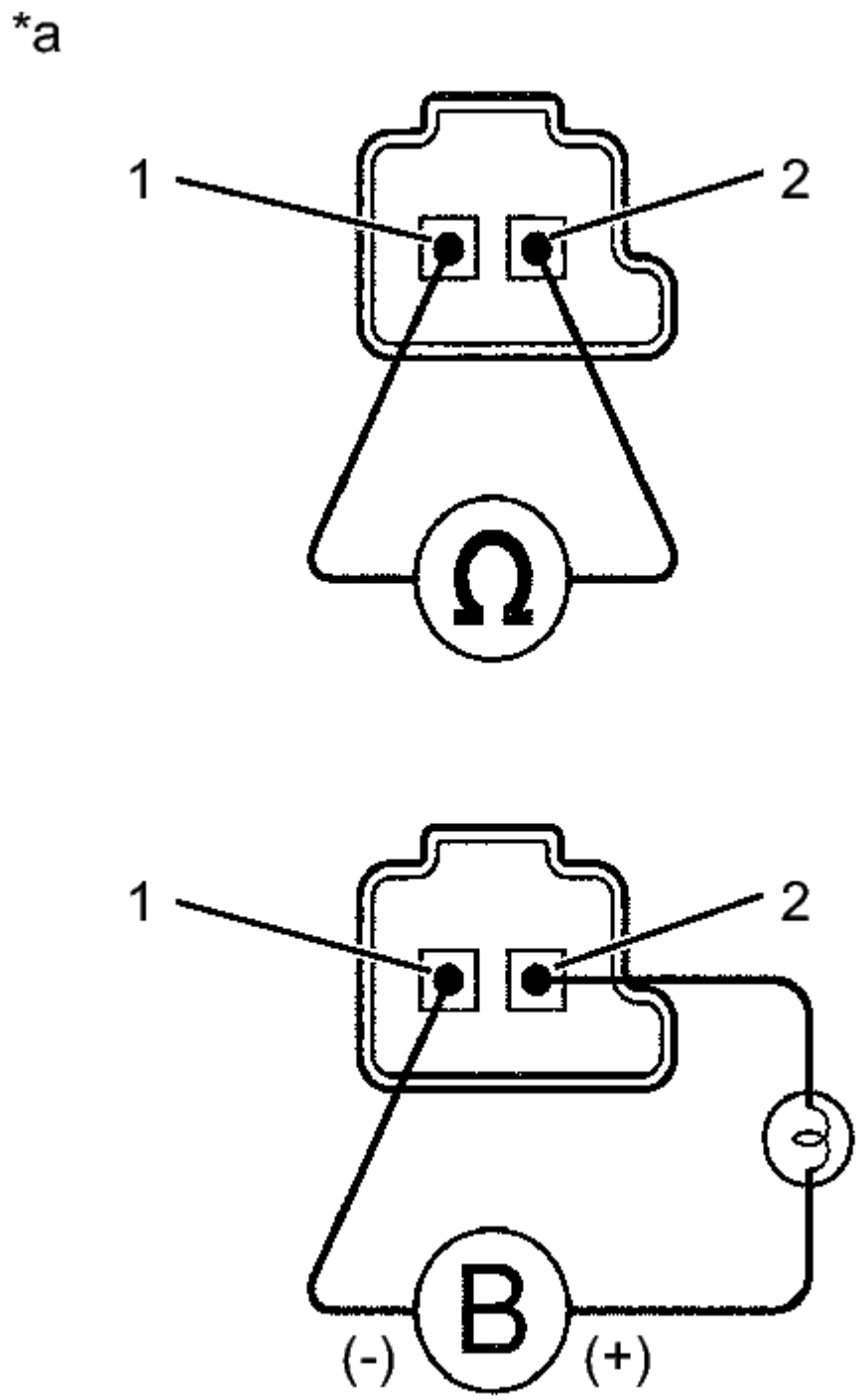

Fig. 59: Measuring Resistance Of Shift Solenoid Valve
Courtesy of TOYOTA MOTOR SALES, U.S.A., INC.

b. Measure the resistance according to the value(s) in the table below.

Standard Resistance

Tester Connection	Condition	Specified Condition
1 - 2	20°C (68° F)	5.0 to 5.6 ohms

TEXT IN ILLUSTRATION

*a	Component without harness connected: (Shift Solenoid Valve SLU)

c. Connect a battery positive (+) lead with a 21 W bulb to terminal 2 and a negative (-) lead to terminal 1 of the solenoid valve connector. Then check that the valve moves and makes an operating sound.

OK

Valve moves and makes an operating sound.

NG --> See step 7

OK: Go to next step

3. **INSPECT TRANSMISSION VALVE BODY ASSEMBLY**
   a. Check the transmission valve body assembly. Refer to **REMOVAL** .

OK

There are no foreign objects on each valve and they operate smoothly.

NG --> See step 8

OK: Go to next step

4. **INSPECT TORQUE CONVERTER ASSEMBLY**
   a. Check the torque converter assembly. Refer to **INSPECTION** .

OK

The torque converter assembly operates normally.

NG --> See step 9

OK --> See step 5

5. **REPLACE AUTOMATIC TRANSMISSION ASSEMBLY. Refer to REMOVAL**
6. **GO TO DTC CHART. Refer to DIAGNOSTIC TROUBLE CODE CHART**
7. **REPLACE SHIFT SOLENOID VALVE SLU. Refer to REMOVAL**
8. **REPAIR OR REPLACE TRANSMISSION VALVE BODY ASSEMBLY. Refer to REMOVAL**
9. **REPLACE TORQUE CONVERTER ASSEMBLY. Refer to REMOVAL**

DTC P2759: TORQUE CONVERTER CLUTCH PRESSURE CONTROL SOLENOID CONTROL CIRCUIT ELECTRICAL (SHIFT SOLENOID VALVE SLU)

DESCRIPTION

Refer to the system description for DTC P2757. Refer to **DESCRIPTION**

DTC No.	DTC Detection Condition	Trouble Area
P2759	Open or short is detected in shift solenoid valve SLU circuit for 1 second or more while driving (1 trip detection logic).	• Open or short in shift solenoid valve SLU circuit • Shift solenoid valve SLU • Transmission wire • TCM

MONITOR DESCRIPTION

When an open or short in a shift solenoid valve (SLU) circuit is detected, the TCM determines there is a malfunction. The TCM will turn on the MIL and store this DTC.

MONITOR STRATEGY

Related DTCs	P2759: Shift solenoid valve SLU/Range check
Required sensors/Components	Shift solenoid valve SLU
Frequency of operation	Continuous
Duration	1 second
MIL operation	Immediately
Sequence of operation	None

TYPICAL ENABLING CONDITIONS

ALL

The monitor will run whenever the following DTCs are not	

present	None
Ignition switch	ON
Starter	OFF

CONDITION (A)

Battery voltage	12 V or more

CONDITION (B)

Battery voltage	10 V or more and less than 12 V
CPU commanded duty	Less than 75%

TYPICAL MALFUNCTION THRESHOLDS

ALL

Output signal duty	100% or more

COMPONENT OPERATING RANGE

Output signal duty	More than 3% and less than 100%

WIRING DIAGRAM

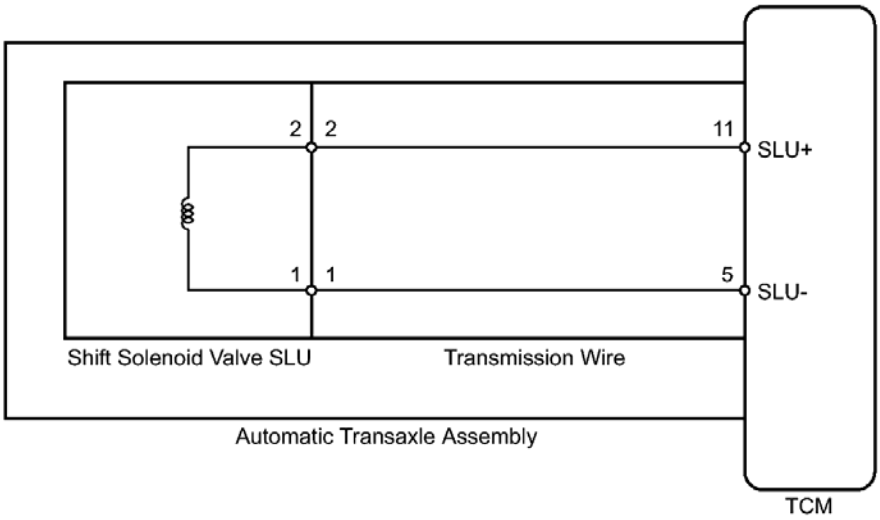

Fig. 60: Torque Converter Clutch Pressure Control Solenoid Control Circuit - Wiring Diagram
Courtesy of TOYOTA MOTOR SALES, U.S.A., INC.

INSPECTION PROCEDURE

NOTE: **Perform the universal trip to clear permanent DTCs. Refer to DTC CHECK / CLEAR .**

PROCEDURE

1. **INSPECT TRANSMISSION WIRE (SHIFT SOLENOID VALVE SLU)**
   a. Remove the TCM from the transaxle.

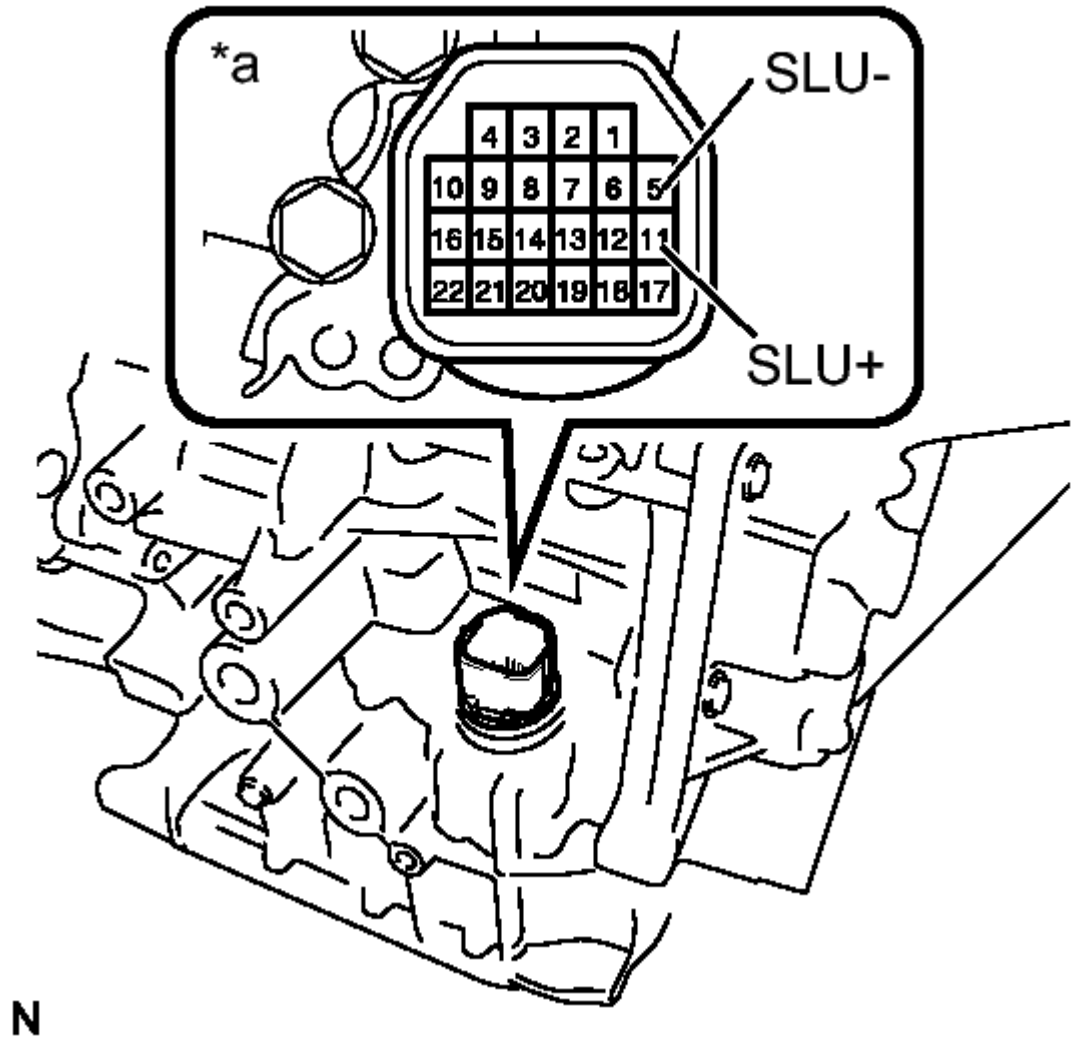

Fig. 61: Inspecting Transmission Wire (Shift Solenoid Valve SLU)
Courtesy of TOYOTA MOTOR SALES, U.S.A., INC.

   b. Measure the resistance according to the value(s) in the table below.

   Standard Resistance

Tester Connection	Condition	Specified Condition
11 (SLU+) - 5 (SLU-)	20°C (68°F)	5.0 to 5.6 ohms
11 (SLU+) - Body ground or other terminals	Always	10 kohms or higher
5 (SLU-) - Body ground or other terminals	Always	10 kohms or higher
11 (SLU+) - All other terminals except 5 (SLU-)	Always	10 kohms or higher
5 (SLU-) - All other terminals except 11 (SLU+)	Always	10 kohms or higher

TEXT IN ILLUSTRATION

*a	Component without harness connected: (Transmission Wire)

NG --> See step 2

OK --> See step 4

2. **INSPECT SHIFT SOLENOID VALVE SLU**
   a. Remove shift solenoid valve SLU.

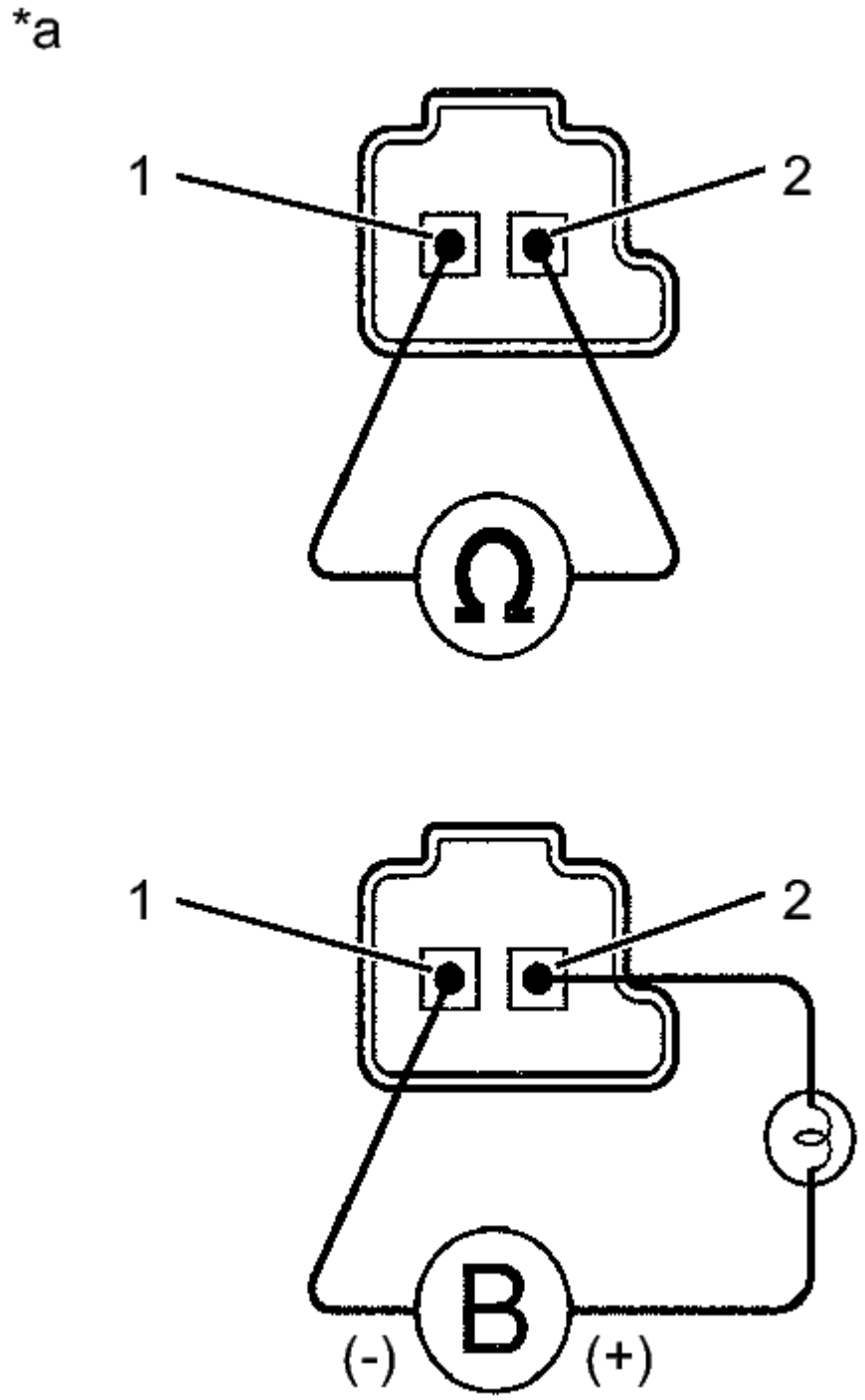

Fig. 62: Measuring Resistance Of Shift Solenoid Valve
Courtesy of TOYOTA MOTOR SALES, U.S.A., INC.

b. Measure the resistance according to the value(s) in the table below.

Standard Resistance

Tester Connection	Condition	Specified Condition
1 - 2	20°C (68° F)	5.0 to 5.6 ohms

TEXT IN ILLUSTRATION

*a	Component without harness connected: (Shift Solenoid Valve SLU)

c. Connect a battery positive (+) lead with a 21 W bulb to terminal 2 and a negative (-) lead to terminal 1 of the solenoid valve connector. Then check that the valve moves and makes an operating sound.

OK

Valve moves and makes an operating sound.

NG --> See step 5

OK --> See step 3

3. **REPLACE TRANSMISSION WIRE. Refer to REMOVAL**
4. **REPLACE TCM. Refer to REMOVAL**
5. **REPLACE SHIFT SOLENOID VALVE SLU. Refer to REMOVAL**

DTC P2769: SHORT IN TORQUE CONVERTER CLUTCH SOLENOID CIRCUIT (SHIFT SOLENOID VALVE SL); DTC P2770: OPEN IN TORQUE CONVERTER CLUTCH SOLENOID CIRCUIT (SHIFT SOLENOID VALVE SL)

DESCRIPTION

Shift solenoid valve SL is turned on and off by signals from the TCM to control the hydraulic pressure acting on the lock-up relay valve, which then controls operation of the lock-up clutch.

DTC No.	DTC Detection Condition	Trouble Area
P2769	TCM detects a short in the shift solenoid valve SL circuit when the shift solenoid valve	• Short in shift solenoid valve SL circuit • Shift solenoid valve SL

	SL is operated (2 trip detection logic).	• Transmission wire • TCM
P2770	TCM detects an open in the shift solenoid valve SL circuit when the shift solenoid valve SL is not operated (2 trip detection logic).	• Open in shift solenoid valve SL circuit • Shift solenoid valve SL • Transmission wire • TCM

Fail-safe function:

If the TCM detects a malfunction, it turns shift solenoid valve SL off.

MONITOR DESCRIPTION

Based on the signals from the throttle position sensor, the air flow meter and the crankshaft position sensor, the TCM sends a signal to shift solenoid valve SL to regulate the hydraulic pressure and provide smoother torque converter clutch engagement. Shift solenoid valve SL responds to commands from the TCM. The valve controls the lock-up relay valve to perform the torque-converter lock-up function. If the TCM detects an open or short circuit for shift solenoid valve SL, it will illuminate the MIL.

MONITOR STRATEGY

Related DTCs	P2769: Shift solenoid valve SL/Range check (Low resistance) P2770: Shift solenoid valve SL/Range check (High resistance)
Required sensors/Components	Shift solenoid valve SL
Frequency of operation	Continuous
Duration	1 time
MIL operation	2 driving cycles
Sequence of operation	None

TYPICAL ENABLING CONDITIONS

P2769: RANGE CHECK (LOW RESISTANCE):

The monitor will run whenever the following DTCs are not present	None
Shift solenoid valve SL	ON
Time after solenoid OFF to ON	More than 0.008 seconds

P2770: RANGE CHECK (HIGH RESISTANCE):

The monitor will run whenever the following DTCs are not present	None
Shift solenoid valve SL	OFF

Time after solenoid ON to OFF	More than 0.008 seconds

TYPICAL MALFUNCTION THRESHOLDS

P2769: RANGE CHECK (LOW RESISTANCE):

Intelligent power MOS diagnosis fail signals detected while the solenoid is operated	Fail at solenoid resistance: 8 ohms or less

P2770: RANGE CHECK (HIGH RESISTANCE):

Intelligent power MOS diagnosis fail signals detected while the solenoid is not operated	Fail at solenoid resistance: 100 kohms or more

COMPONENT OPERATING RANGE

Shift solenoid valve SL	Resistance: 11 to 15 ohms at 20°C (68°F)

WIRING DIAGRAM

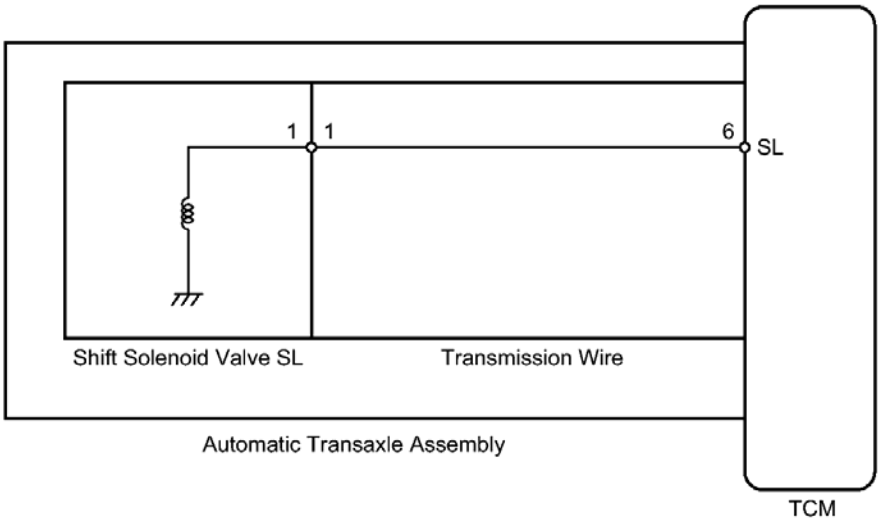

Fig. 63: Torque Converter Clutch Solenoid Circuit - Wiring Diagram
Courtesy of TOYOTA MOTOR SALES, U.S.A., INC.

INSPECTION PROCEDURE

NOTE: **Perform the universal trip to clear permanent DTCs. Refer to DTC CHECK / CLEAR .**

PROCEDURE

1. **INSPECT TRANSMISSION WIRE (SHIFT SOLENOID VALVE SL)**

a. Remove the TCM from the transaxle.

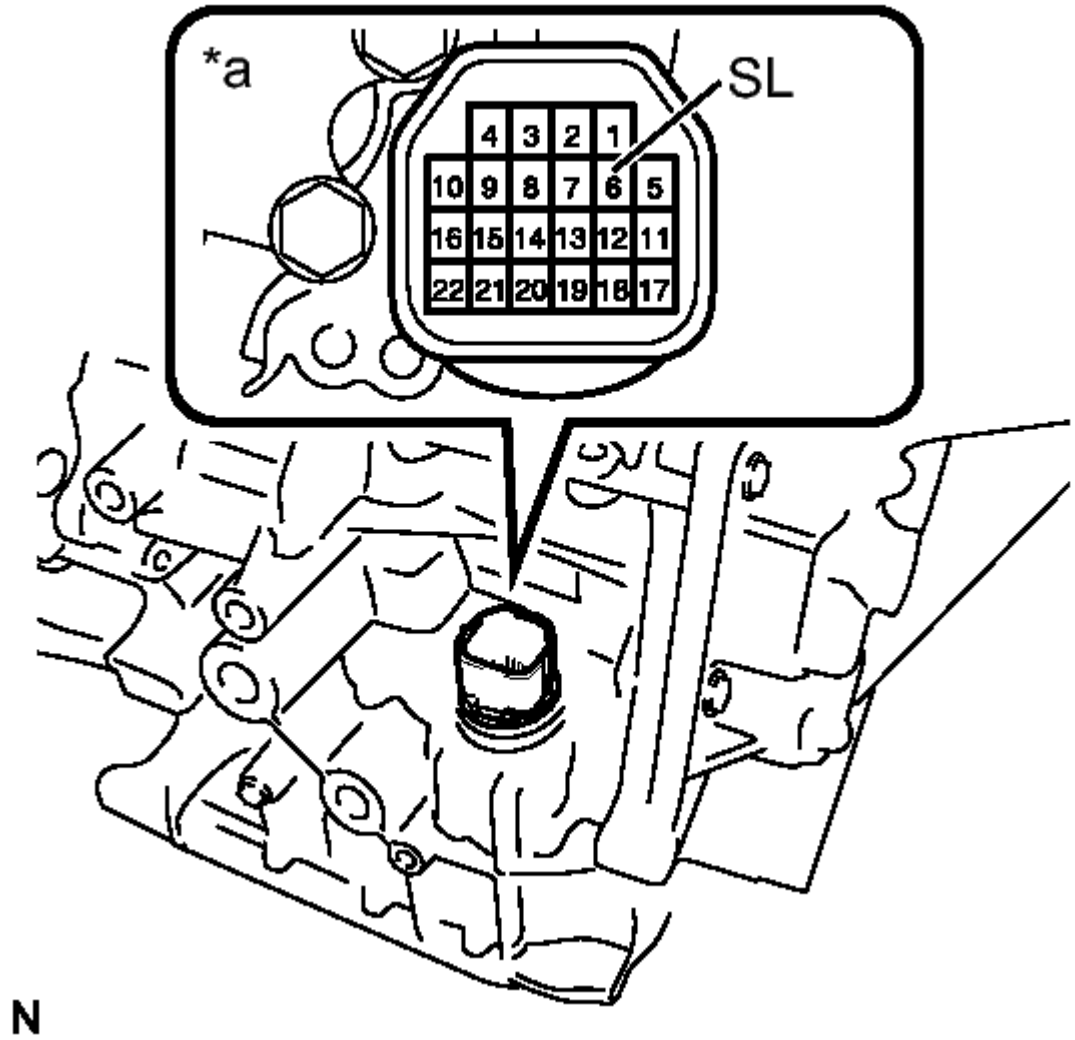

Fig. 64: Inspecting Transmission Wire (Shift Solenoid Valve SL)
Courtesy of TOYOTA MOTOR SALES, U.S.A., INC.

b. Measure the resistance according to the value(s) in the table below.

Standard Resistance

Tester Connection	Condition	Specified Condition
6 (SL) - Body ground	20°C (68°F)	11 to 15 ohms

TEXT IN ILLUSTRATION

*a	Component without harness connected: (Transmission Wire)

NG --> See step 2

OK --> See step 4

2. **INSPECT SHIFT SOLENOID VALVE SL**
   a. Remove shift solenoid valve SL.

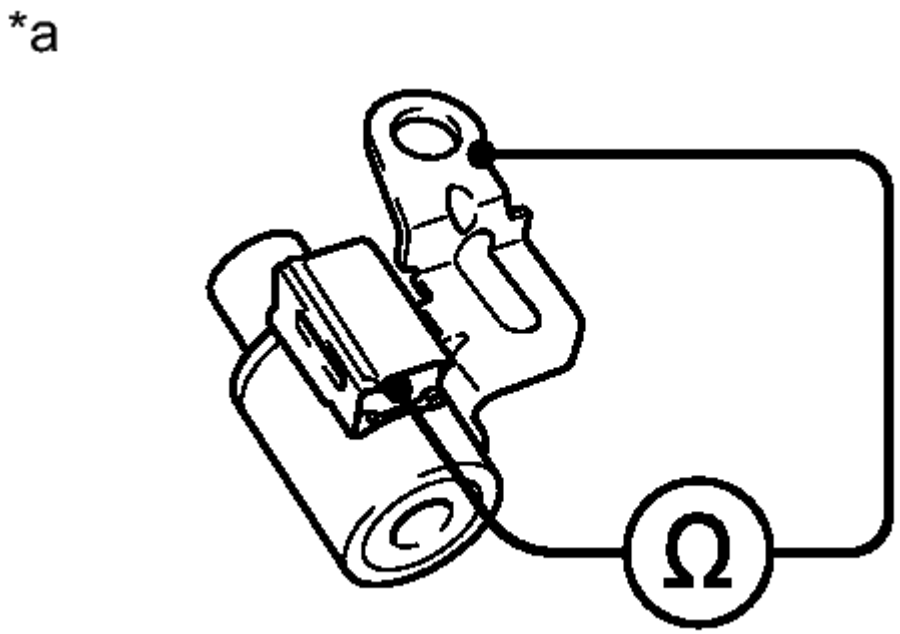

Fig. 65: Inspecting Shift Solenoid Valve SL (Resistance)
Courtesy of TOYOTA MOTOR SALES, U.S.A., INC.

   b. Measure the resistance according to the value(s) in the table below.

   Standard Resistance

Tester Connection	Condition	Specified Condition
Solenoid Connector	20°C (68°	11 to 15

(SL) - Solenoid Body (SL)	F)	ohms

TEXT IN ILLUSTRATION

*a	Component without harness connected: (Shift Solenoid Valve SL)

NG --> See step 5

OK --> See step 3

3. **REPLACE TRANSMISSION WIRE. Refer to REMOVAL**
4. **REPLACE TCM. Refer to REMOVAL**
5. **REPLACE SHIFT SOLENOID VALVE SL. Refer to REMOVAL**

DTC P2808: PRESSURE CONTROL SOLENOID "G" PERFORMANCE (SHIFT SOLENOID VALVE SL4)

DESCRIPTION

The TCM uses the vehicle speed signal and signals from the transmission speed sensors (NC, NT) to detect the actual gear (1st, 2nd, 3rd, 4th, 5th or 6th gear).

Then the TCM compares the actual gear with the shift schedule in the TCM memory to detect mechanical problems of the shift solenoid valves and valve body.

DTC No.	DTC Detection Condition	Trouble Area
P2808	The engine revs freely when 3rd or 5th gear is commanded. (2 trip detection logic) When any of the following is detected. In addition, the condition that 4th gear is engaged when 4th gear is commanded occurs twice. (2 trip detection logic) • When 1st gear is commanded, 3rd gear is engaged. • When 2nd gear is commanded, 3rd gear is engaged. • When 6th gear is commanded, 5th gear is engaged.	• Shift solenoid valve SL4 remains open or closed • Valve body is blocked • Automatic transaxle (clutch, brake or gear etc.)

MONITOR DESCRIPTION

The TCM commands gear shifts by turning the shift solenoid valves on and off. According to the engine speed (NE), input speed (NT) and output speed (NC), the TCM detects the actual gear (1st, 2nd, 3rd, 4th, 5th or 6th gear). When the gear commanded by the TCM and the actual gear are not the same, the TCM illuminates the MIL and stores the DTC.

MONITOR STRATEGY

Related DTCs	P2808: Shift solenoid valve SL4/OFF malfunction Shift solenoid valve SL4/ON malfunction
Required sensors/Components	Shift solenoid valve SL4, Input speed sensor (NT), Output speed sensor (NC), Crankshaft position sensor (NE)
Frequency of operation	Continuous
Duration	OFF malfunction (A): 0.5 seconds OFF malfunction (B): 0.8 seconds ON malfunction: 0.8 seconds
MIL operation	2 driving cycles
Sequence of operation	None

TYPICAL ENABLING CONDITIONS

ALL:

The monitor will run whenever this DTC is not present. (Not circuit malfunction)	P0712, P0713 (ATF temperature sensor circuit (TFT sensor)) P0115, P0117, P0118 (ECT sensor circuit) P0715, P0717 (Input speed sensor (NT) circuit) P0791, P0793 (Output speed sensor (NC) circuit) P0748 (Shift solenoid valve SL1 circuit) P0778 (Shift solenoid valve SL2 circuit) P0798 (Shift solenoid valve SL3 circuit) P2810 (Shift solenoid valve SL4 circuit) P0327, P0328, P0332, P0333 (KCS sensor circuit) P0120, P0121, P0122, P0123, P0220, P0222, P0223, P0604, P0606, P060A, P060B, P060D, P060E, P0657, P1607, P2102, P2103, P2111, P2112, P2118, P2119, P2135 ((ETCS) Electronic throttle control system) U0100 (CAN communication system)
Transmission range	D
TFT (Transmission fluid temperature)	-10°C (14°F) or more
TFT (Transmission fluid temperature) sensor circuit	No circuit malfunction

ECT (Engine coolant temperature) sensor circuit	No circuit malfunction
Input speed sensor (NT) circuit	No circuit malfunction
Output speed sensor (NC) circuit	No circuit malfunction
Shift solenoid valve SL1 circuit	No circuit malfunction
Shift solenoid valve SL2 circuit	No circuit malfunction
Shift solenoid valve SL3 circuit	No circuit malfunction
Shift solenoid valve SL4 circuit	No circuit malfunction
KCS (Knock control sensor circuit)	No circuit malfunction
(ETCS) Electronic throttle control system	Not system down
CAN communication system	Not system down
Engine	Starting

OFF MALFUNCTION (A):

TCM select gear	3rd or 5th
Throttle valve opening angle	3% or more

OFF MALFUNCTION (B):

TCM select gear	3rd
Throttle valve opening angle	4.5% or more
Vehicle speed	2 km/h (1.2 mph) or more
Engine coolant temperature	40°C (104°F) or more
Input speed (NT) / Output speed (NO) with 1st	3.304 to 7.724
Input speed (NT) / Output speed (NO) with 2nd	1.901 to 2.340
Input speed (NT) / Output speed (NO) with 3rd	1.399 to 1.649
Input speed (NT) / Output speed (NO) with 4th	0.998 to 1.138
Input speed (NT) / Output speed (NO) with 5th	0.705 to 0.836
Input speed (NT) / Output speed (NO) with 6th	0.568 to 0.695

ON MALFUNCTION (A):

TCM select gear	1st
Time after transmission to 1st gear	0.1 seconds or more
Vehicle speed	2 to 40 km/h (1.2 to 24.9 mph)
Engine coolant temperature	40°C (104°F) or more
Input speed (NT) / Output speed (NO) with 1st	3.304 to 7.724
Input speed (NT) / Output speed (NO) with 2nd	1.901 to 2.340
Input speed (NT) / Output speed (NO) with 3rd	1.399 to 1.649
Input speed (NT) / Output speed (NO) with 4th	0.998 to 1.138
Input speed (NT) / Output speed (NO) with 5th	0.705 to 0.836
Input speed (NT) / Output speed (NO) with 6th	0.568 to 0.695

ON MALFUNCTION (B):

TCM select gear	2nd
Throttle valve opening angle	4.5% or more at engine speed 2000 RPM (condition varies with engine speed)
Vehicle speed	2 km/h (1.2 mph) or more
Engine coolant temperature	40°C (104°F) or more
Input speed (NT) / Output speed (NO) with 1st	3.304 to 7.724
Input speed (NT) / Output speed (NO) with 2nd	1.901 to 2.340
Input speed (NT) / Output speed (NO) with 3rd	1.399 to 1.649
Input speed (NT) / Output speed (NO) with 4th	0.998 to 1.138
Input speed (NT) / Output speed (NO) with 5th	0.705 to 0.836
Input speed (NT) / Output speed (NO) with 6th	0.568 to 0.695

ON MALFUNCTION (C):

TCM select gear	6th
Throttle valve opening angle	4.5% or more at engine speed 2000 RPM (condition varies with engine speed)
Vehicle speed	2 km/h (1.2 mph) or more
Engine coolant temperature	40°C (104°F) or more
Input speed (NT) / Output speed (NO) with 1st	3.304 to 7.724
Input speed (NT) / Output speed (NO) with 2nd	1.901 to 2.340
Input speed (NT) / Output speed (NO) with 3rd	1.399 to 1.649
Input speed (NT) / Output speed (NO) with 4th	0.998 to 1.138
Input speed (NT) / Output speed (NO) with 5th	0.705 to 0.836
Input speed (NT) / Output speed (NO) with 6th	0.568 to 0.695

ON MALFUNCTION (D):

TCM select gear	4th
Throttle valve opening angle	4.5% or more at engine speed 2000 RPM (condition vary with engine speed)
Vehicle speed	2 km/h (1.2 mph) or more
Engine coolant temperature	40°C (104°F) or more
Input speed (NT) / Output speed (NO) with 1st	3.304 to 7.724
Input speed (NT) / Output speed (NO) with 2nd	1.901 to 2.340
Input speed (NT) / Output speed (NO) with 3rd	1.399 to 1.649
Input speed (NT) / Output speed (NO) with 4th	0.998 to 1.138
Input speed (NT) / Output speed (NO) with 5th	0.705 to 0.836
Input speed (NT) / Output speed (NO) with 6th	0.568 to 0.695

TYPICAL MALFUNCTION THRESHOLDS

OFF MALFUNCTION (A):

Input speed (NT) - Output speed (NC) x Gear ratio	1000 RPM or more

OFF MALFUNCTION (B):

Input speed (NT) / Output speed (NC)	3.304 to 7.724

ON MALFUNCTION (A) AND (B):

Input speed (NT) / Output speed (NC)	1.399 to 1.649

ON MALFUNCTION (C):

Input speed (NT) / Output speed (NC)	0.705 to 0.836

ON MALFUNCTION (D):

Input speed (NT) / Output speed (NC)	0.998 to 1.138

INSPECTION PROCEDURE

NOTE: **Perform the universal trip to clear permanent DTCs. Refer to DTC CHECK / CLEAR .**

PROCEDURE

1. **CHECK OTHER DTCS OUTPUT (IN ADDITION TO DTC P2808)**
   a. Connect the Techstream to the DLC3.
   b. Turn the ignition switch to ON.
   c. Turn the Techstream on.
   d. Enter the following menus: Powertrain / ECT / Trouble Codes.
   e. Read the DTCs using the Techstream.

RESULT

Result	Proceed to
P2808 and other DTCs are output	A
Only P2808 is output	B

HINT:

If a solenoid is stuck OFF, DTCs for several solenoids including the malfunctioning solenoid will be detected.

B --> See step 3

A: Go to next step

2. **PERFORM ACTIVE TEST USING TECHSTREAM (CONTROL THE SHIFT POSITION)**

NOTE: This test should always be performed with at least 2 people.

a. Warm up the engine.
b. Turn the ignition switch off.
c. Connect the Techstream to the DLC3.
d. Turn the ignition switch to ON.
e. Turn the Techstream on.
f. Enter the following menus: Powertrain / ECT / Active Test.
g. According to the display on the Techstream, perform the Active Test.

HINT:

Comparing the gear commanded by the Active Test with the actual gear enables confirmation of the problem. Refer to **FAIL-SAFE CHART** .

ECT

Tester Display	Test Part	Control Range	Diagnostic Note
Control the Shift Position	Operates the shift solenoid valves to allow gears to selected manually.	• Press "-->" button: Upshift occurs • Press "<--" button: Downshift occurs	Can be used to check the operation of the shift solenoid valves.

NOTE:

- **This test can be conducted when the vehicle is stopped.**
- **When shifting gears using the Active Test function, do not operate the accelerator pedal for 2 seconds before and after shifting gears.**

HINT:

The gear commanded by the TCM is shown in the Data List / Shift Status display on the Techstream.

h. Check the vehicle speed and the gear when the engine speed is 1000 RPM.

HINT:

Because the torque converter clutch has not engaged, it may be difficult to obtain the speeds specified in 4th, 5th, and 6th gear, however a difference of speed should still be evident following each gear change.

Standard

1st	2nd	3rd	4th	5th	6th
8 to 12 km/h (5 to 7.5 mph)	15 to 19 km/h (9.3 to 11.8 mph)	21 to 25 km/h (13.0 to 15.5 mph)	31 to 35 km/h (19.3 to 21.7 mph)	44 to 48 km/h (27.3 to 29.8 mph)	52 to 56 km/h (32.3 to 34.8 mph)

i. Compare the TCM commanded gear and the actual gear.

RESULT

Actuator Gear during Malfunction		TCM Commanded Gear						Proceed to
		1st	2nd	3rd	4th	5th	6th	
Shift solenoid SL1	Stuck ON	1st	2nd	3rd	4th	4th	4th	A
	Stuck OFF	N*1	N*1	N*1	N*1	5th	6th	
Shift solenoid SL2	Stuck ON	4th	4th	4th	4th	5th	6th	B
	Stuck OFF	1st	2nd	3rd	1st	N*1	N*1	
Shift solenoid SL3	Stuck ON	2nd	2nd	3rd	4th	5th	6th	C
	Stuck OFF	1st	1st	3rd	4th	5th	N*1	
Shift solenoid SL4	Stuck ON*3	3rd	3rd	3rd	4th	5th	5th	D
	Stuck OFF	1st	2nd	1st	4th	N*1	6th	
Shift solenoid SLT	Stuck ON	N*2	N*2	N*2	N*2	N*2	N*2	E
	Stuck OFF*3	1st	2nd	3rd	4th	5th	6th	

HINT:

- *1: Neutral
- *2: If shift solenoid SLT is stuck on, the line pressure will be low. Therefore, the amount of torque that can be transmitted by each gear is lower than the normal limit. When the engine power exceeds this lowered limit, the engine speed will increase freely.
- *3: When shift solenoid SLT is stuck off, gear shifting is normal.

A --> See step 6

B --> See step 7

C --> See step 8

E --> See step 9

D: Go to next step

3. **INSPECT SHIFT SOLENOID VALVE SL4**
    a. Remove shift solenoid valve SL4.

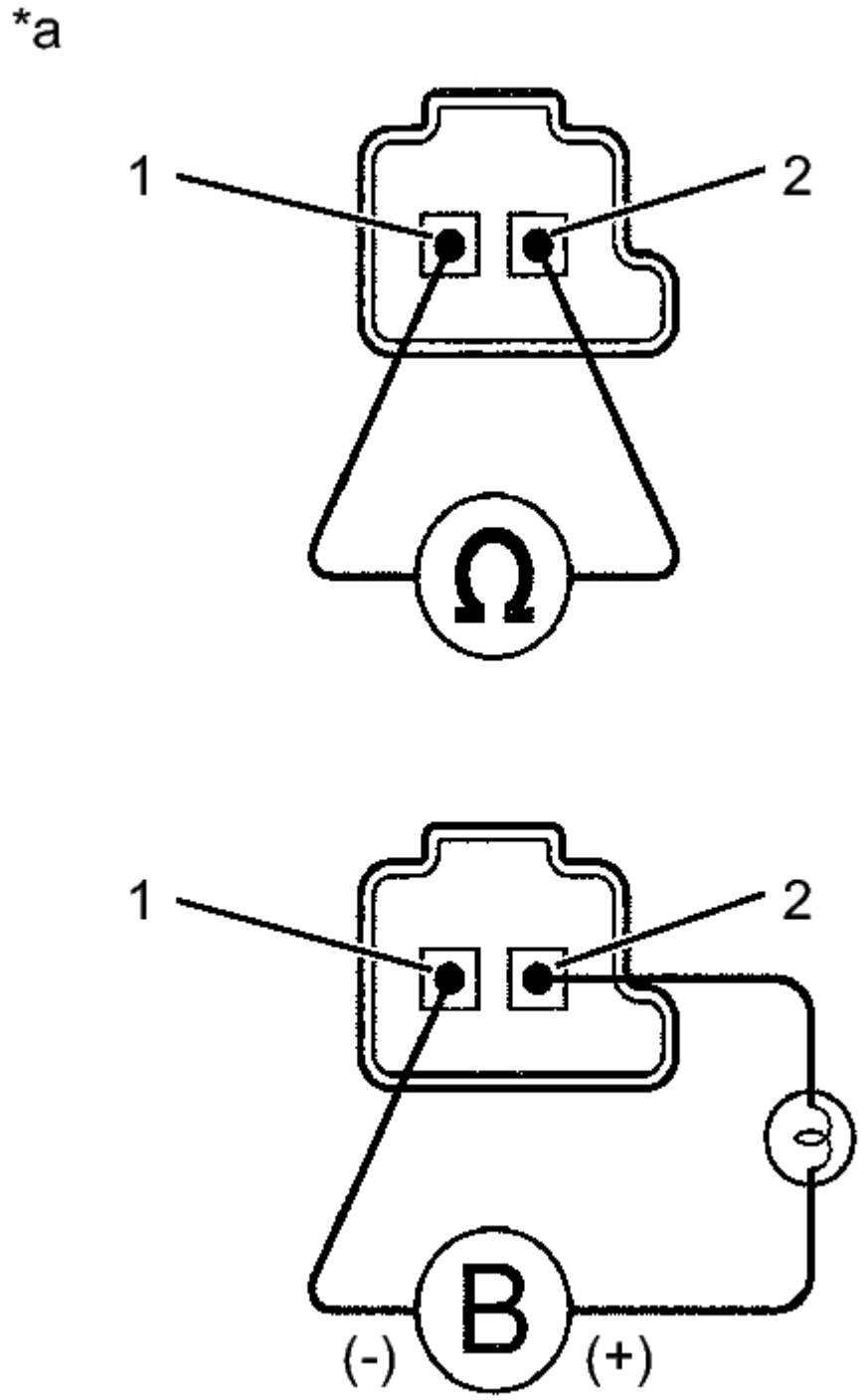

Fig. 66: Measuring Resistance Of Shift Solenoid Valve
Courtesy of TOYOTA MOTOR SALES, U.S.A., INC.

b. Measure the resistance according to the value(s) in the table below.

Standard Resistance

Tester Connection	Condition	Specified Condition
1 - 2	20°C (68° F)	5.0 to 5.6 ohms

TEXT IN ILLUSTRATION

*a	Component without harness connected: (Shift Solenoid Valve SL3)

c. Connect a battery positive (+) lead with a 21 W bulb to terminal 2 and a negative (-) lead to terminal 1 of the solenoid valve connector. Then check that the valve moves and makes an operating sound.

OK

Valve moves and makes an operating sound.

NG --> See step 10

OK: Go to next step

4. **INSPECT TRANSMISSION VALVE BODY ASSEMBLY**
   a. Check the transmission valve body assembly. Refer to **REMOVAL** .

OK

There are no foreign objects on each valve and they operate smoothly.

NG --> See step 11

OK --> See step 5

5. **REPLACE AUTOMATIC TRANSAXLE ASSEMBLY. Refer to REMOVAL**
6. **GO TO DTC CHART (RELATED SHIFT SOLENOID VALVE (SL1) PERFORMANCE DTC P0746). Refer to DTC P0746: Pressure Control Solenoid "A" Performance (Shift Solenoid Valve SL1)**
7. **GO TO DTC CHART (RELATED SHIFT SOLENOID VALVE (SL2) PERFORMANCE DTC P0776). Refer to DTC P0776: Pressure Control Solenoid "B" Performance (Shift Solenoid Valve SL2)**

8. **GO TO DTC CHART (RELATED SHIFT SOLENOID VALVE (SL3) PERFORMANCE DTC P0796). Refer to DTC P0796: Pressure Control Solenoid "C" Performance (Shift Solenoid Valve SL3)**
9. **GO TO DTC CHART (RELATED SHIFT SOLENOID VALVE (SLT) PERFORMANCE DTC P2714). Refer to DTC P2714: Pressure Control Solenoid "D" Performance (Shift Solenoid Valve SLT)**
10. **REPLACE SHIFT SOLENOID VALVE SL4. Refer to REMOVAL**
11. **REPAIR OR REPLACE TRANSMISSION VALVE BODY ASSEMBLY. Refer to REMOVAL**

DTC P2810: PRESSURE CONTROL SOLENOID "G" ELECTRICAL (SHIFT SOLENOID VALVE SL4)

DESCRIPTION

Changing from 1st to 6th is performed by the TCM turning shift solenoid valves SL1, SL2, SL3, SL4 and SL on and off. If an open or short circuit occurs in any of the shift solenoid valves, the TCM controls the remaining normal shift solenoid valves to allow the vehicle to be operated. Refer to **FAIL-SAFE CHART**

DTC No.	DTC Detection Condition	Trouble Area
P2810	The TCM checks for an open or short in the shift solenoid valve SL4 circuit while driving and shifting gears. (1 trip detection logic) • Output signal duty equals 100%. (NOTE: SL4 output signal duty is less than 100% under normal condition.)	• Open or short in shift solenoid valve SL4 circuit • Shift solenoid valve SL4 • Transmission wire • TCM

MONITOR DESCRIPTION

The TCM commands gear shifts by turning the shift solenoid valves on or off. When there is an open or short circuit in any shift solenoid valve circuit, the TCM detects the problem and illuminates the MIL and stores the DTC. The TCM also performs the fail-safe function and turns the other normal shift solenoid valves on or off (In case of an open or short circuit, the TCM stops sending current to the circuit.)

Refer to **FAIL-SAFE CHART** .

MONITOR STRATEGY

Related DTCs	P0798: Shift solenoid valve SL3/Range check
Required sensors/Components	Shift solenoid valve SL4
Frequency of operation	Continuous
Duration	1 second

MIL operation	Immediately
Sequence of operation	None

TYPICAL ENABLING CONDITIONS

ALL

The monitor will run whenever the following DTCs are not present	None
Ignition switch	ON
Starter	OFF

CONDITION (A)

Battery voltage	12 V or more

CONDITION (B)

Battery voltage	10 V or more and less than 12 V
CPU commanded duty	Less than 75%

TYPICAL MALFUNCTION THRESHOLDS

ALL

Output signal duty	100% or more

COMPONENT OPERATING RANGE

Output signal duty	More than 3% and less than 100%

WIRING DIAGRAM

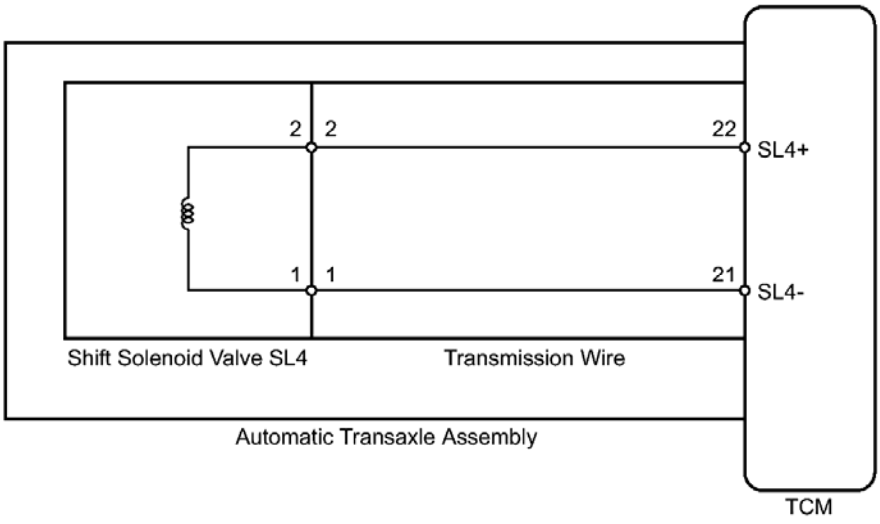

Fig. 67: Shift Solenoid Valve SL4 Circuit - Wiring Diagram
Courtesy of TOYOTA MOTOR SALES, U.S.A., INC.

INSPECTION PROCEDURE

NOTE: **Perform the universal trip to clear permanent DTCs. Refer to DTC CHECK / CLEAR .**

PROCEDURE

1. **INSPECT TRANSMISSION WIRE (SL4)**
   a. Remove the TCM from the transaxle.

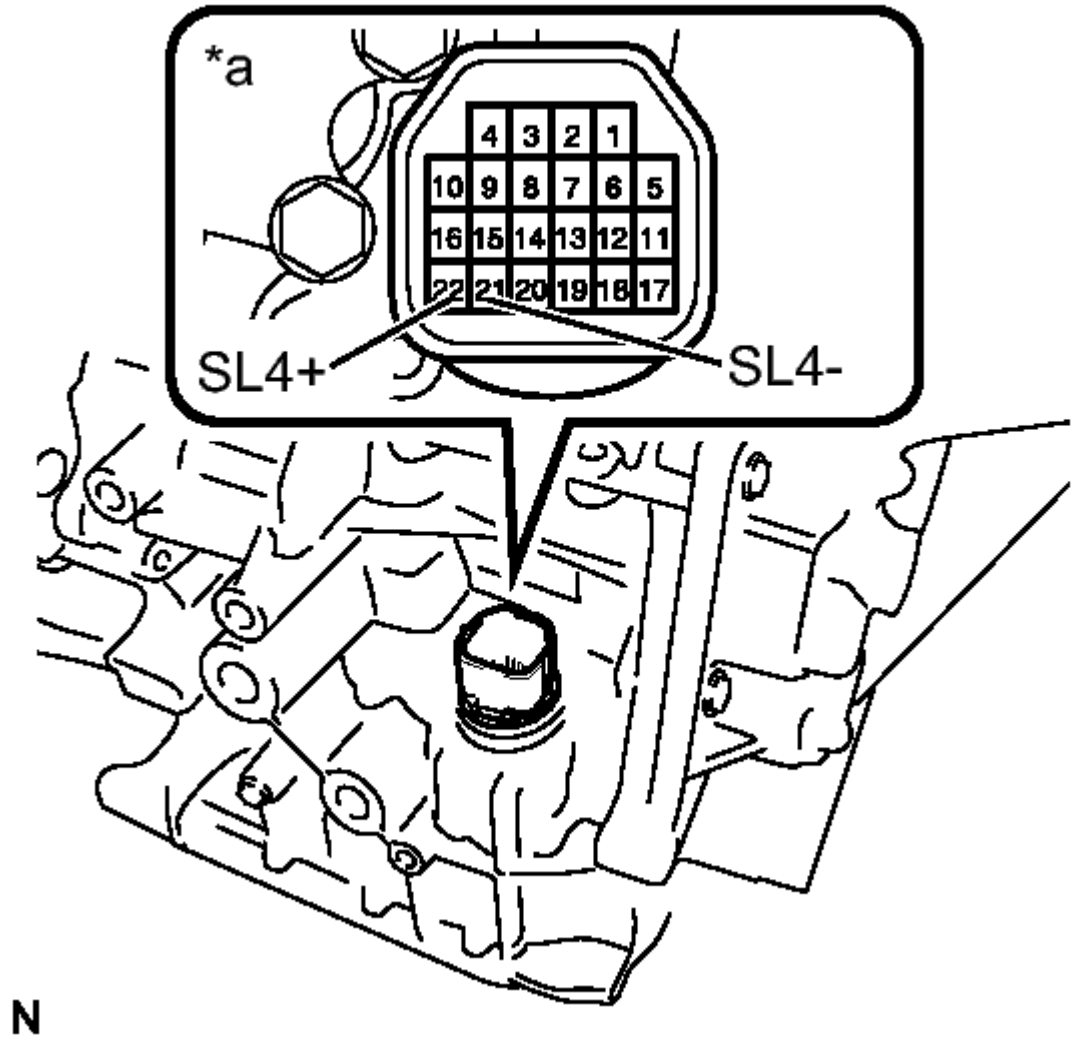

Fig. 68: Inspecting Transmission Wire (SL4)
Courtesy of TOYOTA MOTOR SALES, U.S.A., INC.

b. Measure the resistance according to the value(s) in the table below.

Standard Resistance

Tester Connection	Condition	Specified Condition
22 (SL4+) - 21 (SL4-)	20°C (68° F)	5.0 to 5.6 ohms
22 (SL4+) - Body ground	Always	10 kohms or higher
21 (SL4-) - Body	Always	10 kohms

ground		or higher
22 (SL4+) - All other terminals except 21 (SL4-)	Always	10 kohms or higher
21 (SL4-) - All other terminals except 22 (SL4+)	Always	10 kohms or higher

TEXT IN ILLUSTRATION

*a	Component without harness connected: (Shift Solenoid Valve SL4)

NG --> See step 2

OK --> See step 4

2. **INSPECT SHIFT SOLENOID VALVE SL4**
   a. Remove shift solenoid valve SL4.

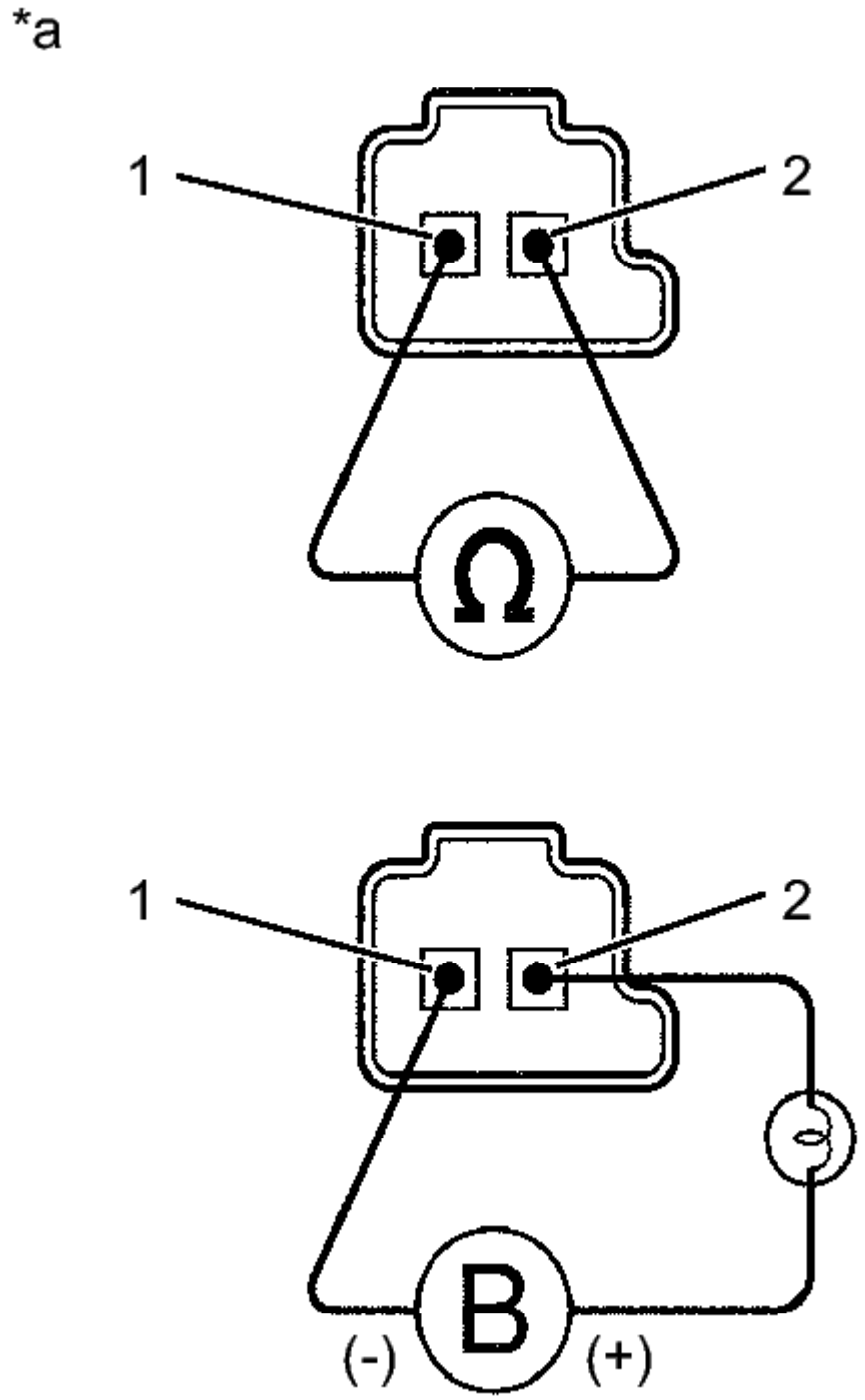

Fig. 69: Measuring Resistance Of Shift Solenoid Valve
Courtesy of TOYOTA MOTOR SALES, U.S.A., INC.

b. Measure the resistance according to the value(s) in the table below.

Standard Resistance

Tester Connection	Condition	Specified Condition
1 - 2	20°C (68°F)	5.0 to 5.6 ohms

TEXT IN ILLUSTRATION

*a	Component without harness connected: (Shift Solenoid Valve SL4)

c. Connect a battery positive (+) lead with a 21 W bulb to terminal 2 and a negative (-) lead to terminal 1 of the solenoid valve connector. Then check that the valve moves and makes an operating sound.

OK

Valve moves and makes an operating sound.

NG --> See step 5

OK --> See step 3

3. **REPLACE TRANSMISSION WIRE. Refer to REMOVAL**
4. **REPLACE TCM. Refer to REMOVAL**
5. **REPLACE SHIFT SOLENOID VALVE SL4. Refer to REMOVAL**

DTC U0100: LOST COMMUNICATION WITH ECM / PCM "A"

DESCRIPTION

The engine control unit communicates with the TCM using the Controller Area Network (CAN).

If there is a problem in this communication, the TCM sets a DTC.

DTC No.	DTC Detection Condition	Trouble Area
U0100	Following conditions are met for 1.25 seconds (1 trip detection logic): • Ignition switch ON	• Harness and connector • ECM

	• Battery voltage is 10.5 V or more • No communication between the ECM and TCM	• TCM

MONITOR STRATEGY

Related DTCs	U0100: Verify communication
Required Sensors/Components (Main)	TCM
Required Sensors/Components (Related)	-
Frequency of Operation	Continuous
Duration	1.25 seconds
MIL Operation	Immediately
Sequence of Operation	None

TYPICAL ENABLING CONDITIONS

Monitor runs whenever following DTCs not present	None
Battery Voltage	10.5 V or more
Ignition Switch	ON
Starter	OFF

TYPICAL MALFUNCTION THRESHOLDS

Communication between TCM and ECM	No communication

WIRING DIAGRAM

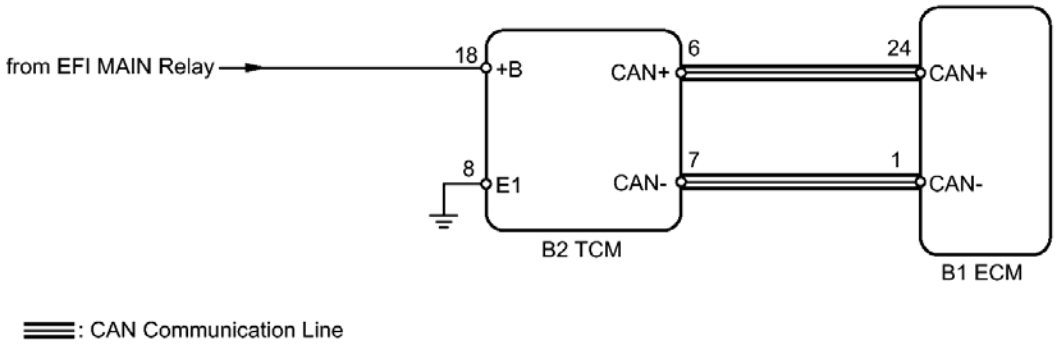

Fig. 70: CAN Communication Circuit - Wiring Diagram
Courtesy of TOYOTA MOTOR SALES, U.S.A., INC.

INSPECTION PROCEDURE

NOTE: **Perform the universal trip to clear permanent DTCs. Refer to DTC CHECK / CLEAR .**

HINT:

- Refer to inspection procedure for CAN communication system.
- If the CAN communication malfunctions, the TCM cannot receive the current data from the ECM. In this case, the freeze frame data output from the TCM has not been updated, so the data will not be useful for the inspection. However, reading the Data List as the first step in troubleshooting is effective to find malfunctions.
- The malfunction area can be checked using the Bus Check function on the Techstream. Refer to **DIAGNOSIS SYSTEM** .

PROCEDURE

1. **CHECK ECU TERMINAL VOLTAGE (+B AND E1 TERMINALS)**
   a. Disconnect the TCM connector.

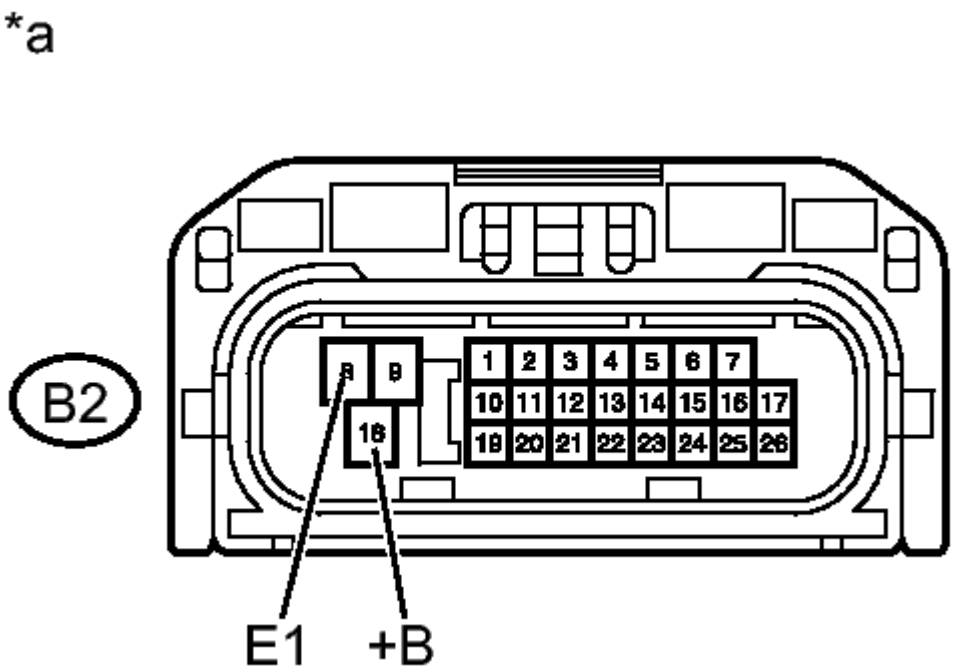

Fig. 71: Measuring Voltage At ECU +B & E1 Terminals
Courtesy of TOYOTA MOTOR SALES, U.S.A., INC.

   b. Turn the ignition switch to ON.
   c. Measure the voltage according to the value(s) in the table below.

   Standard Voltage

Tester Connection	Switch Condition	Specified Condition
B2-18 (+B) - B2-8 (E1)	Ignition switch ON	11 to 14 V

d. Turn the ignition switch off.
e. Measure the resistance according to the value(s) in the table below.

Standard Resistance

Tester Connection	Condition	Specified Condition
B2-8 (E1) - Body ground	Always	Below 1 ohms

TEXT IN ILLUSTRATION

*a	Front view of wire harness connector: (to TCM)

NG --> REPAIR OR REPLACE HARNESS OR CONNECTOR

OK: Go to next step

2. **CHECK HARNESS AND CONNECTOR (TCM - ECM)**
   a. Disconnect the TCM connector.
   b. Disconnect the ECM connector.
   c. Measure the resistance according to the value(s) in the table below.

Standard Resistance

Tester Connection	Condition	Specified Condition
B2-6 (CAN+) - B1-24 (CAN+)	Always	Below 1 ohms
B2-7 (CAN-) - B1-1	Always	Below 1 ohms

(CAN-)		
B2-6 (CAN+) or B1-24 (CAN+) - Body ground or other terminals	Always	1 Mohms or higher
B2-7 (CAN-) or B1-1 (CAN-) - Body ground or other terminals	Always	1 Mohms or higher

NG --> REPAIR OR REPLACE HARNESS OR CONNECTOR

OK: Go to next step

3. **REPLACE TCM**
   a. Replace the TCM. Refer to **REMOVAL** .

      HINT:

      Replace the TCM with a TCM from a normally functioning vehicle of the same model.

NEXT: Go to next step

4. **CHECK DTC OUTPUT**
   a. Connect the Techstream to the DLC3.
   b. Start the engine.
   c. Turn the Techstream on.
   d. Enter the following menus: Powertrain / ECT / Trouble Codes.
   e. Read the DTCs using the Techstream.

      RESULT

Result	Proceed to
DTC not output	A
U0100	

is output	B

B --> See step 5

A --> END

5. **REPLACE ECM. Refer to <u>REMOVAL</u>**

CIRCUIT TESTS

Transmission Control Switch Circuit

DESCRIPTION

When the shift lever is in S and it is moved toward "-" or "+", it is possible to select different shift ranges (1st through 6th ranges).

Moving the shift lever toward "+" increases the shift range by one, and moving the shift lever toward "-" decreases the shift range by one.

WIRING DIAGRAM

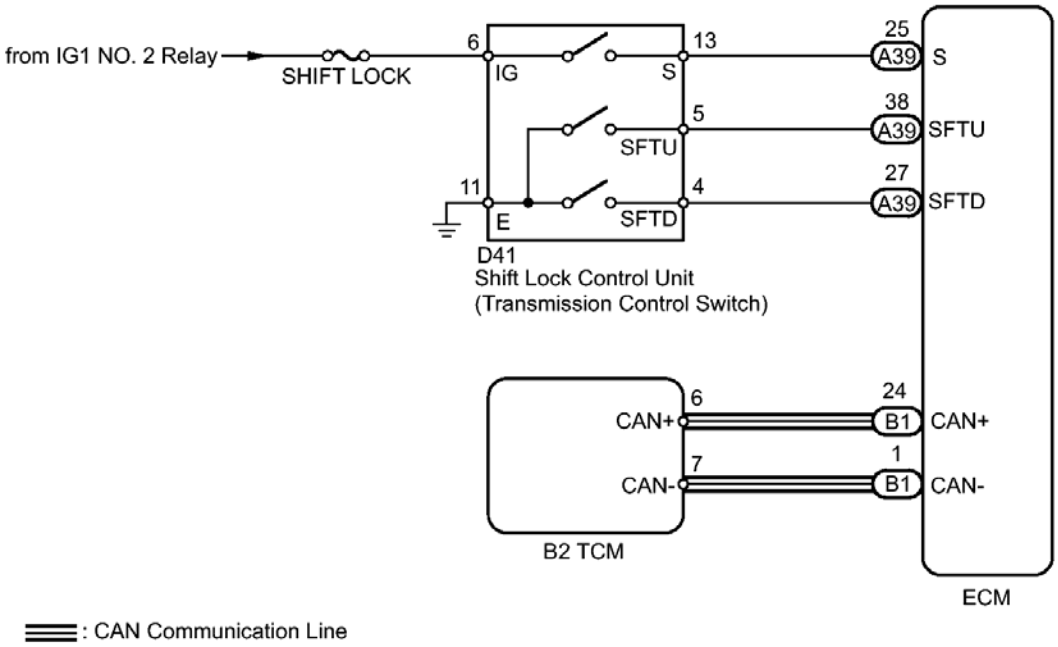

<u>Fig. 72: Transmission Control Switch Circuit - Wiring Diagram</u>
Courtesy of TOYOTA MOTOR SALES, U.S.A., INC.

INSPECTION PROCEDURE

NOTE: **Inspect the fuses for circuits related to this system before performing the following inspection procedure.**

PROCEDURE

1. **CHECK HARNESS AND CONNECTOR (BATTERY - TRANSMISSION CONTROL SWITCH)**
   a. Disconnect the transmission control switch connector of shift lock control unit.

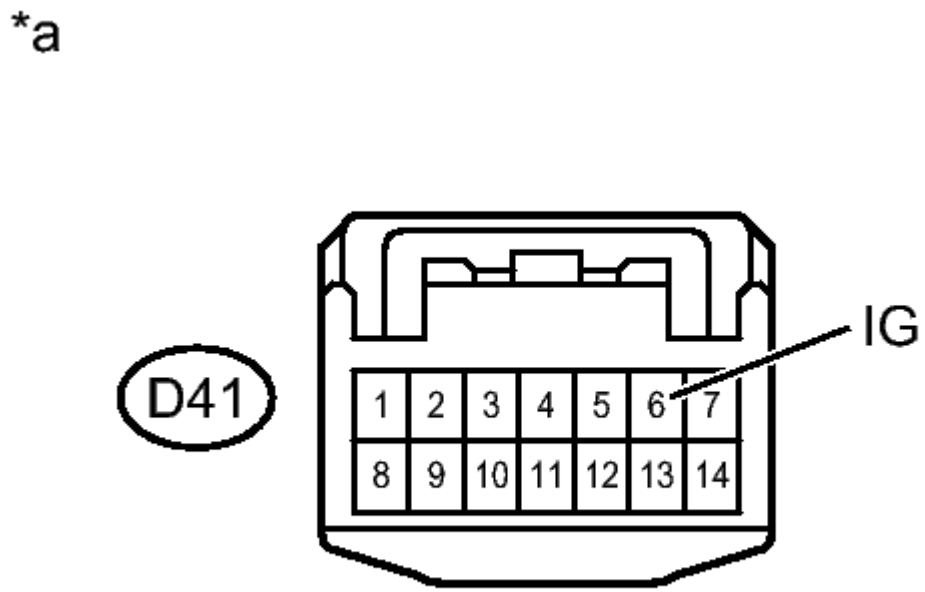

Fig. 73: Checking Harness And Connector (Battery - Transmission Control Switch)
Courtesy of TOYOTA MOTOR SALES, U.S.A., INC.

   b. Turn the ignition switch to ON.
   c. Measure the voltage according to the value(s) in the table below.

   Standard Voltage

Tester Connection	Switch Condition	Specified Condition
D41-6 (IG) - Body ground	Ignition switch ON	11 to 14 V
	Ignition switch off	Below 1 V

TEXT IN ILLUSTRATION

*a	Front view of wire harness connector (to Transmission Control Switch)

NG --> REPAIR OR REPLACE HARNESS OR CONNECTOR

OK: Go to next step

2. **CHECK HARNESS AND CONNECTOR (TRANSMISSION CONTROL SWITCH - BODY GROUND)**
   a. Measure the resistance according to the value(s) in the table below.

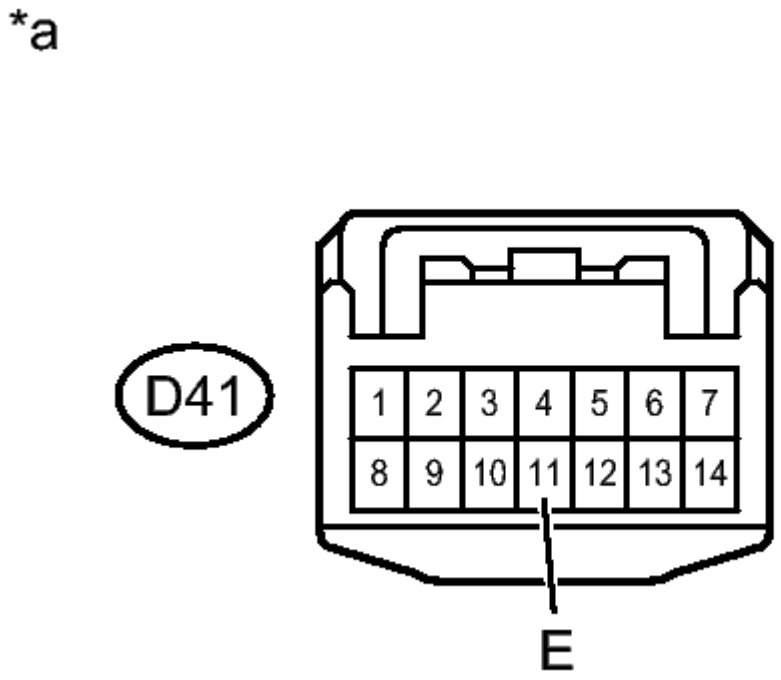

Fig. 74: Checking Harness And Connector (Transmission Control Switch - Body Ground)
Courtesy of TOYOTA MOTOR SALES, U.S.A., INC.

Standard Resistance

Tester Connection	Condition	Specified Condition
D41-11 (E)		Below 1

- Body ground	Always	ohms

TEXT IN ILLUSTRATION

*a	Front view of wire harness connector (to Transmission Control Switch)

NG --> REPAIR OR REPLACE HARNESS OR CONNECTOR

OK: Go to next step

3. **INSPECT SHIFT LOCK CONTROL UNIT (TRANSMISSION CONTROL SWITCH)**
   a. Measure the resistance according to the value(s) in the table below.

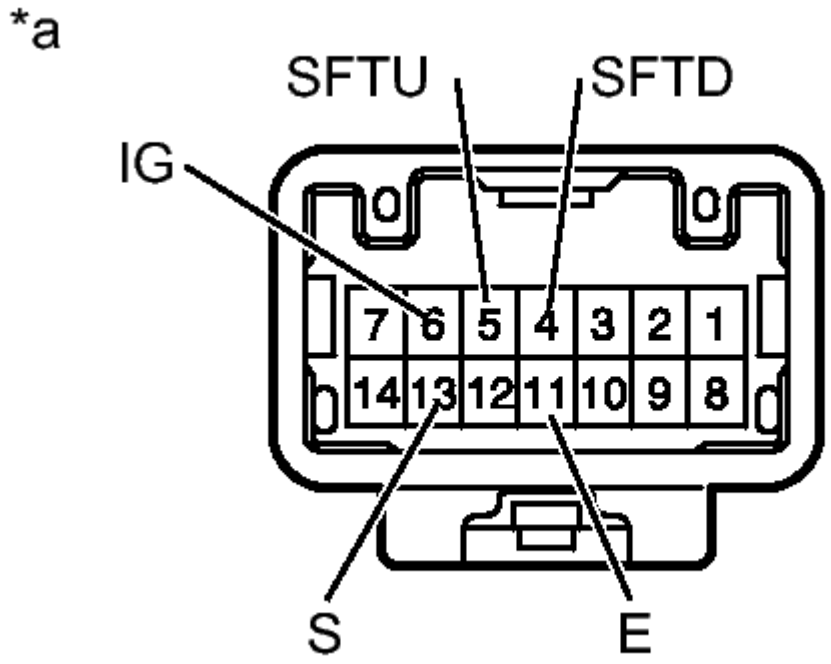

Fig. 75: Inspecting Shift Lock Control Unit (Transmission Control Switch)
Courtesy of TOYOTA MOTOR SALES, U.S.A., INC.

Standard Resistance

Tester	Switch	Specified

Connection	Condition	Condition
6 (IG) - 13 (S)	Shift lever in S, "+" or "-"	Below 1 ohms
	Shift lever not in S, "+" or "-"	10 kohms or higher
5 (SFTU) - 11 (E)	Shift lever held in "+" (Up-shift)	Below 1 ohms
	Shift lever not held in "+"	10 kohms or higher
4 (SFTD) - 11 (E)	Shift lever held in "-" (Down-shift)	Below 1 ohms
	Shift lever not held in "-"	10 kohms or higher

TEXT IN ILLUSTRATION

*a	Component without harness connected (Transmission Control Switch)

NG --> See step 6

OK: Go to next step

4. **CHECK HARNESS AND CONNECTOR (TRANSMISSION CONTROL SWITCH - ECM)**
   a. Disconnect the ECM connector.
   b. Measure the resistance according to the value(s) in the table below.

   Standard Resistance

Tester Connection	Condition	Specified Condition
D41-4 (SFTD) -	Always	Below 1

A39-27 (SFTD)		ohms
D41-5 (SFTU) - A39-38 (SFTU)	Always	Below 1 ohms
D41-13 (S) - A39-25 (S)	Always	Below 1 ohms
D41-4 (SFTD) - Body ground	Always	10 kohms or higher
D41-5 (SFTU) - Body ground	Always	10 kohms or higher
D41-13 (S) - Body ground	Always	10 kohms or higher

NG --> REPAIR OR REPLACE HARNESS OR CONNECTOR

OK --> See step 5

5. **PROCEED TO NEXT SUSPECTED AREA SHOWN IN PROBLEM SYMPTOMS TABLE. Refer to PROBLEM SYMPTOMS TABLE**
6. **REPLACE SHIFT LOCK CONTROL UNIT (TRANSMISSION CONTROL SWITCH). Refer to REMOVAL**

ECU Power Source Circuit

DESCRIPTION

When the ignition switch is turned to ON, voltage from the ECM MREL terminal is applied to the EFI MAIN relay. This causes the contacts of the EFI MAIN relay to close, which supplies power to terminal +B of the TCM.

WIRING DIAGRAM

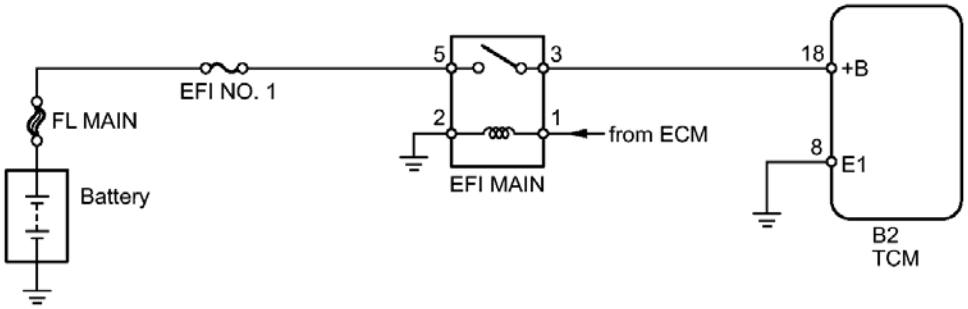

Fig. 76: ECU Power Source Circuit - Wiring Diagram
Courtesy of TOYOTA MOTOR SALES, U.S.A., INC.

INSPECTION PROCEDURE

NOTE: **Inspect the fuses for circuits related to this system before performing the following inspection procedure.**

PROCEDURE

1. **CHECK HARNESS AND CONNECTOR (TCM - BODY GROUND)**
   a. Turn the ignition switch off.

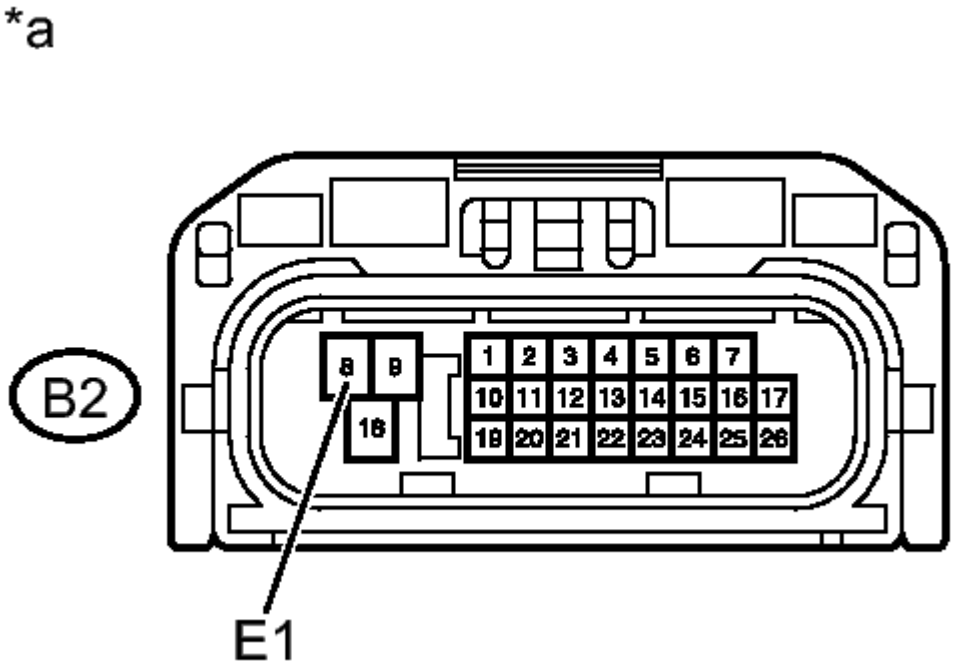

Fig. 77: Checking Harness And Connector (TCM - Body Ground)
Courtesy of TOYOTA MOTOR SALES, U.S.A., INC.

b. Disconnect the TCM connectors.

c. Measure the resistance according to the value(s) in the table below.

Standard Resistance

Tester Connection	Condition	Specified Condition
B2-8 (E1) - Body ground	Always	Below 1 ohms

TEXT IN ILLUSTRATION

*a	Front view of wire harness connector (to TCM)

NG --> REPAIR OR REPLACE HARNESS OR CONNECTOR

OK: Go to next step

2. **INSPECT ECU TERMINAL VOLTAGE (+B TERMINAL)**

a. Disconnect the TCM connectors.

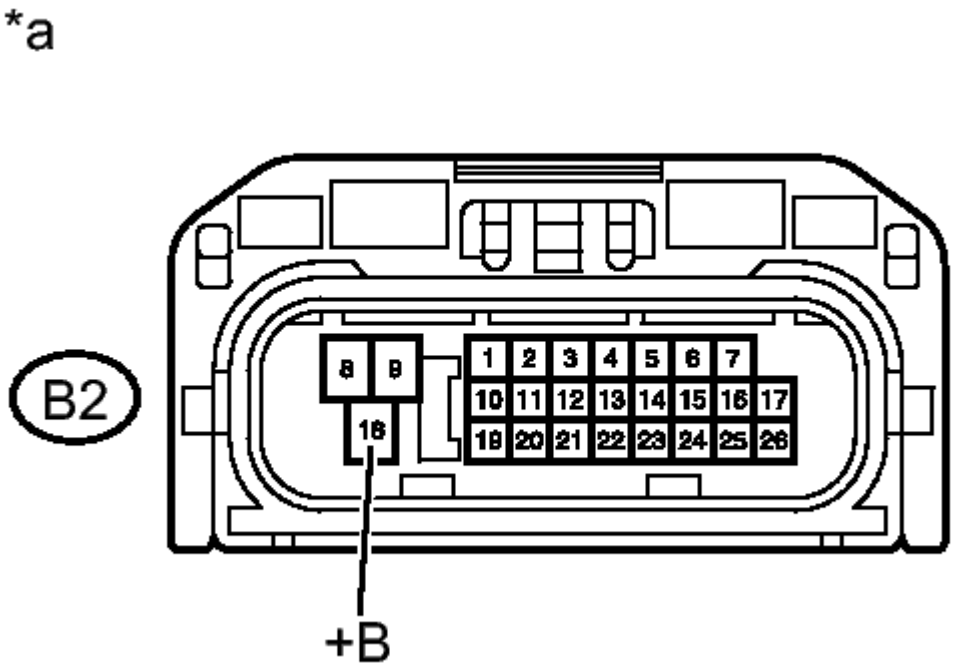

Fig. 78: Inspecting ECU Terminal Voltage (+B Terminal)
Courtesy of TOYOTA MOTOR SALES, U.S.A., INC.

b. Turn the ignition switch to ON.
c. Measure the voltage according to the value(s) in the table below.

Standard Voltage

Tester Connection	Switch Condition	Specified Condition
B2-18 (+B) - Body ground	Ignition switch ON	11 to 14 V

TEXT IN ILLUSTRATION

*a	Front view of wire harness connector (to TCM)

NG --> See step 3

OK --> See step 4

3. **CHECK HARNESS AND CONNECTOR (TCM - ENGINE ROOM JUNCTION BLOCK ASSEMBLY)**
   a. Turn the ignition switch off.
   b. Disconnect the TCM connector.
   c. Remove the EFI MAIN relay from the engine room relay block.
   d. Measure the resistance according to the value(s) in the table below.

Standard Resistance

Tester Connection	Condition	Specified Condition
B2-18 (+B) - EFI MAIN relay holder 3	Always	Below 1 ohms
B2-18 (+B) - Body ground	Always	10 kohms or higher

NG --> REPAIR OR REPLACE HARNESS OR CONNECTOR

OK --> See step 5

4. **PROCEED TO NEXT SUSPECTED AREA SHOWN IN PROBLEM SYMPTOMS TABLE. Refer to PROBLEM SYMPTOMS TABLE**
5. **GO TO ECM POWER SOURCE CIRCUIT (ENGINE CONTROL SYSTEM / SFI SYSTEM). Refer to ECM Power Source Circuit**

AUTOMATIC TRANSAXLE SYSTEM

PRECAUTION

PRECAUTION

1. **IGNITION SWITCH EXPRESSIONS**
   a. The type of ignition switch used on this model differs according to the specifications of the vehicle. The expressions listed in the table below are used in this information.

Expression	Ignition Switch (Position)	Engine Switch (Condition)
Ignition switch off	LOCK	Off
Ignition switch ACC	ACC	On (ACC)
Ignition switch ON	ON	On (IG)
Engine start	START	Start

2. **TROUBLESHOOTING PRECAUTION**

NOTE:

- **If automatic transaxle parts are replaced, perform the following as necessary referring to the table below:**
  - **Registration of the transaxle compensation code. Refer to REGISTRATION.**
  - **Initialization of the transaxle compensation code. Refer to INITIALIZATION.**
  - **Road test. Refer to ROAD TEST.**
  - **Reset Memory (learned values). Refer to INITIALIZATION.**

PARTS REPLACEMENT COMPENSATION TABLE

Replaced Part	Transaxle Compensation Code	Road Test	Reset Memory (Learned Values)
Automatic Transaxle			

Assembly		Input	Necessary	Reset
Valve Body Assembly		Initialize	Necessary	Reset
Shift Solenoid Valve SL1 and/or SL2		-	Necessary	-
Shift Solenoid Valve SL3 and/or SL4		Initialize	Necessary	Reset
TCM (If possible, read the transaxle compensation code from the previous TCM)	Possible	Input (Into the new TCM)	Necessary	Reset
	Impossible	Initialize	Necessary	Reset

- **Reset Memory cannot be completed by only disconnecting and reconnecting the cable to the negative (-) battery terminal.**

WARNING: When using compressed air, always aim away from yourself to prevent Automatic Transmission Fluid (ATF) or kerosene from spraying on your face.

NOTE:

- **The automatic transaxle is composed of precision-made parts, necessitating careful inspection before reassembly because even a small nick could cause fluid leakage or affect performance.**
- **The procedures are organized so that you work on only one component group at a time. This will help avoid confusion with similar-looking parts of different sub-assemblies being on your workbench at the same time.**
- **The component groups are inspected and repaired from the converter housing side.**
- **Whenever possible, complete the inspection, repair and reassembly before proceeding to the next component group. If a defect is found in a certain component group during reassembly, inspect and repair this group immediately. If a component group cannot be assembled because parts are being ordered, be sure to keep all parts of the group in a separate container while proceeding with disassembly, inspection, repair and reassembly of other component groups.**
- **Use of Toyota Genuine ATF WS is recommended.**
- **All disassembled parts should be washed clean, and compressed air should be blown through any fluid passages and holes.**
- **Dry all parts with compressed air. Never use cloth.**
- **The recommended ATF or kerosene should be used for cleaning.**

- **After cleaning, the parts should be arranged in the order they were removed for efficient inspection, repairs, and reassembly.**
- **New discs for the brakes and clutches that will be used for replacement must be soaked in ATF for at least 15 minutes before reassembly.**
- **All oil seal rings, clutch discs, clutch plates, rotating parts, and sliding surfaces should be coated with ATF prior to reassembly.**
- **All old gaskets and rubber O-rings must be replaced.**
- **Do not apply adhesive cement to gaskets or similar parts.**
- **Make sure that the ends of the snap rings are not aligned with any cutouts. Also make sure that snap rings are correctly installed into the grooves.**
- **If a worn bushing is to be replaced, the sub-assembly containing the bushing must also be replaced.**
- **Check the thrust bearings and races for wear or damage. Replace them if necessary.**
- **Use petroleum jelly to keep parts in place.**
- **When working with seal packing material, the following must be observed:**
  - **Using a razor blade and a gasket scraper, remove all the old seal packing material from the gasket surface.**
  - **Thoroughly clean all components to remove any loose material.**
  - **Clean both sealing surfaces with a non-residue solvent.**
  - **Parts must be reassembled within 10 minutes of application. Otherwise, the seal packing material must be removed and reapplied.**

DEFINITION OF TERMS

DEFINITION OF TERMS

Term	Definition
Monitor description	Description of what the TCM monitors and how it detects malfunctions (monitoring purpose and its details).
Related DTCs	Diagnostic code
Typical enabling condition	Preconditions that allow the TCM to detect malfunctions. With all preconditions satisfied, the TCM sets the DTC when the monitored value(s) exceeds the malfunction threshold(s).
	The priority order that is applied to monitoring, if multiple sensors and

Sequence of operation	components are used to detect the malfunction. While another sensor is being monitored, the next sensor or component will not be monitored until the previous monitoring has concluded.
Required sensor/components	The sensors and components that are used by the TCM to detect malfunctions.
Frequency of operation	The number of times that the TCM checks for malfunctions per driving cycle. "Once per driving cycle" means that the TCM detects malfunction only one time during a single driving cycle. "Continuous" means that the TCM detects malfunction every time when the enabling conditions are met.
Duration	The minimum time that the TCM must sense a continuous deviation in the monitored value (s) before setting a DTC. This timing begins after the "typical enabling conditions" are met.
Malfunction thresholds	Beyond this value, the TCM will conclude that there is a malfunction and set a DTC.
MIL operation	MIL illumination timing after a defect is detected. "Immediately" means that the TCM illuminates MIL the instant the TCM determines that there is a malfunction. "2 driving cycles" means that the TCM illuminates MIL if the same malfunction is detected again in the 2nd driving cycle.
Component operating range	Normal operation range of sensors and solenoids under normal driving conditions. Use these ranges as a reference. They cannot be used to judge if a sensor or solenoid is defective.

PARTS LOCATION

ILLUSTRATION

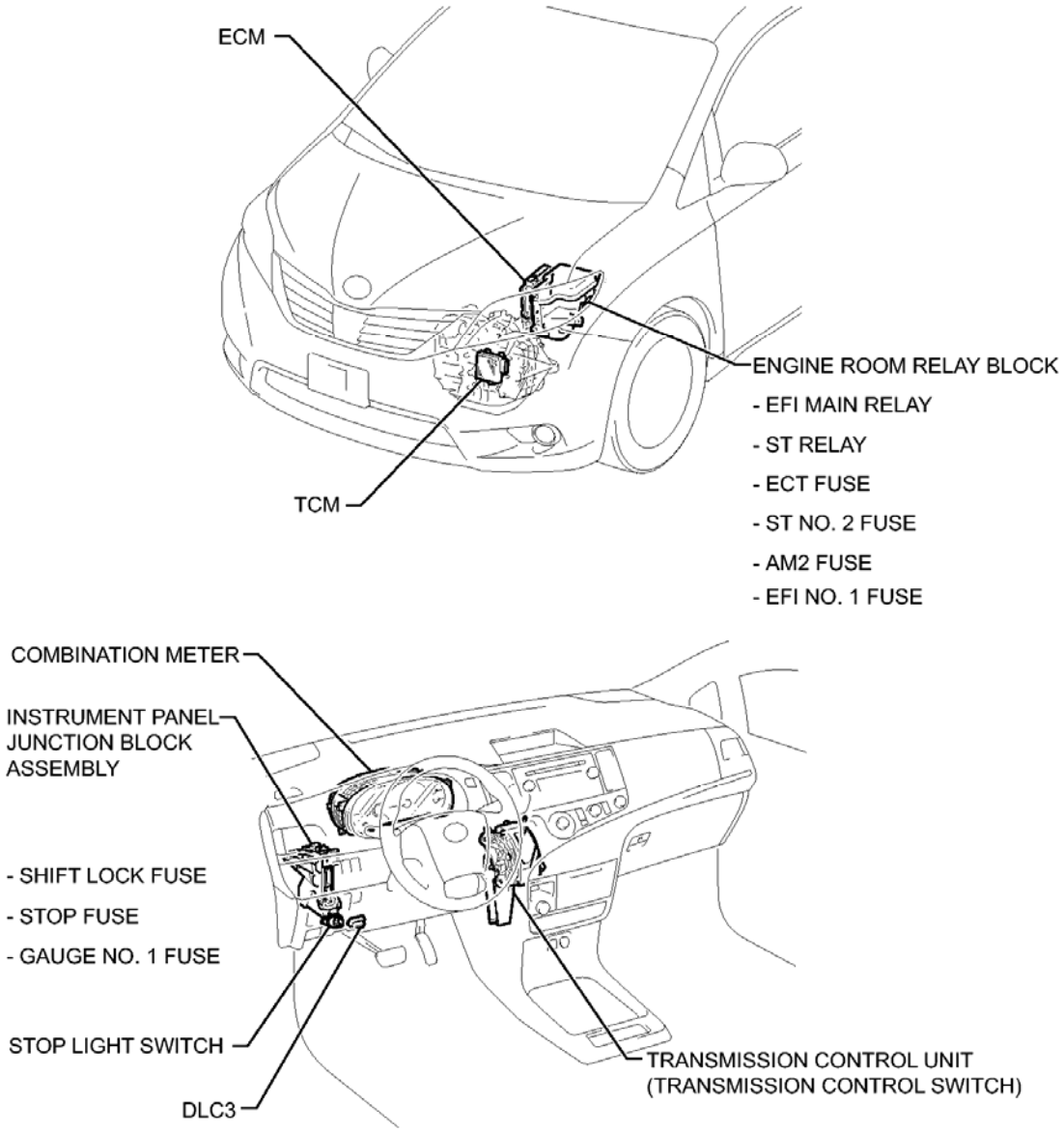

P

Fig. 1: Automatic Transaxle System Replacement Components (1 Of 2)
Courtesy of TOYOTA MOTOR SALES, U.S.A., INC.

ILLUSTRATION

VALVE BODY ASSEMBLY :

SHIFT SOLENOID VALVE (SL1, SL2, SL3, SL4, SL, SLU, SLT)

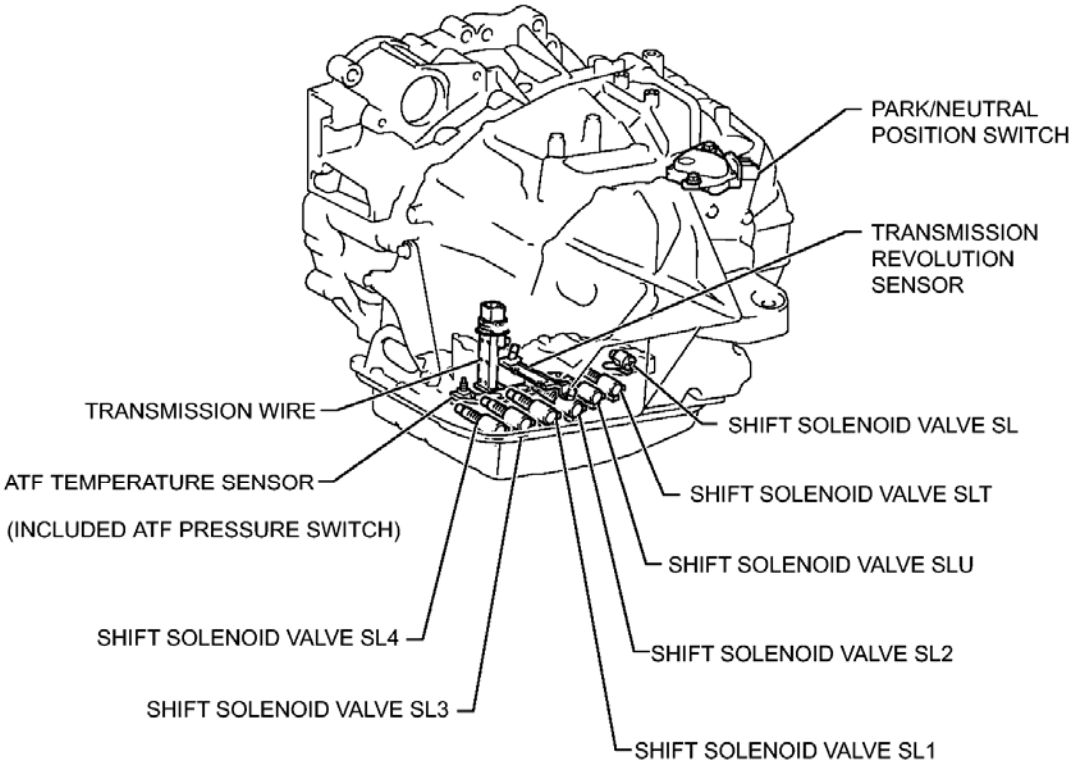

H

Fig. 2: Automatic Transaxle System Replacement Components (2 Of 2)
Courtesy of TOYOTA MOTOR SALES, U.S.A., INC.

SYSTEM DIAGRAM

SYSTEM DIAGRAM

The configuration of the electronic control system in the U660E automatic transaxle is as shown in the following chart.

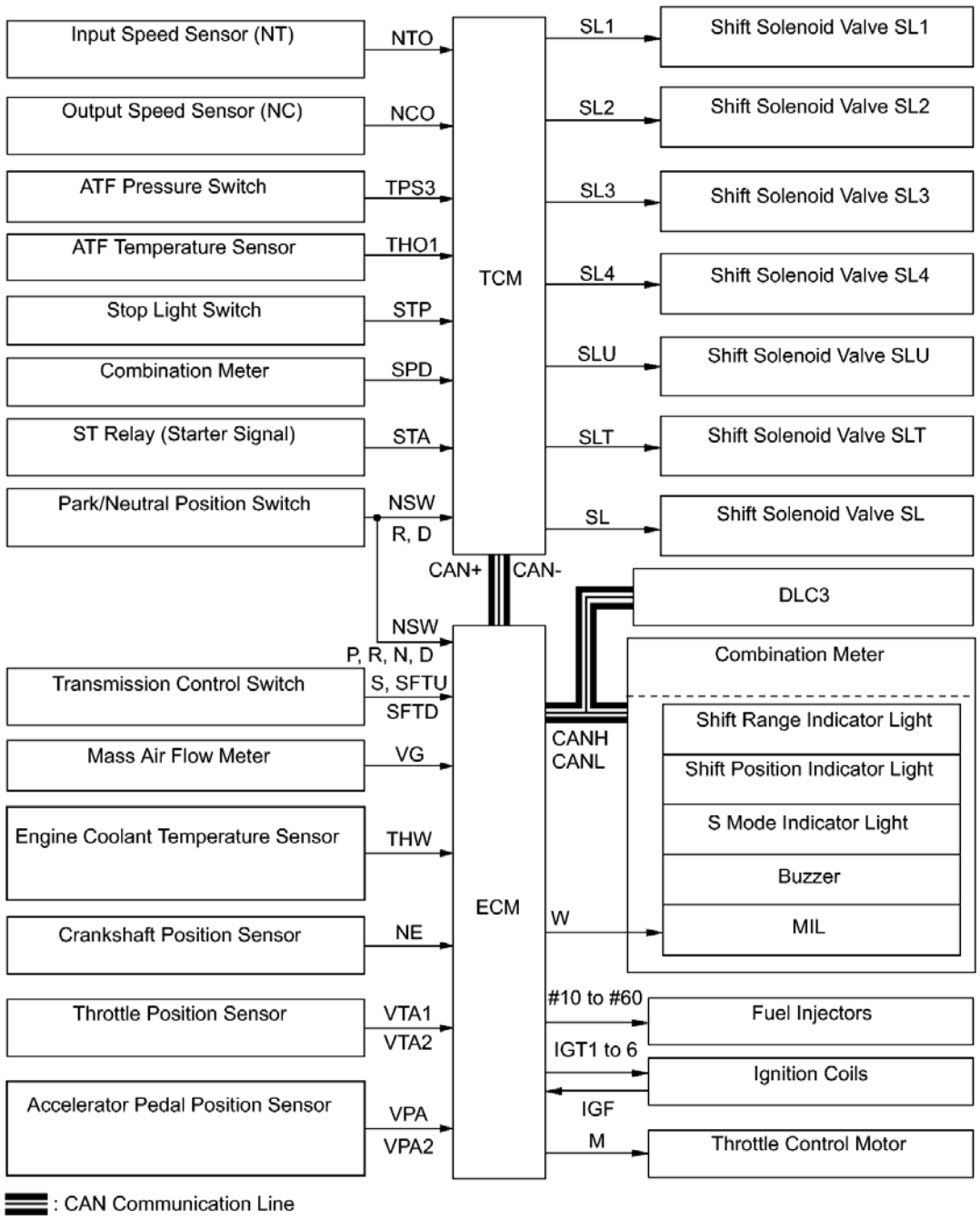

Fig. 3: Automatic Transaxle System Diagram (1 Of 4)
Courtesy of TOYOTA MOTOR SALES, U.S.A., INC.

w/o Smart Key System:

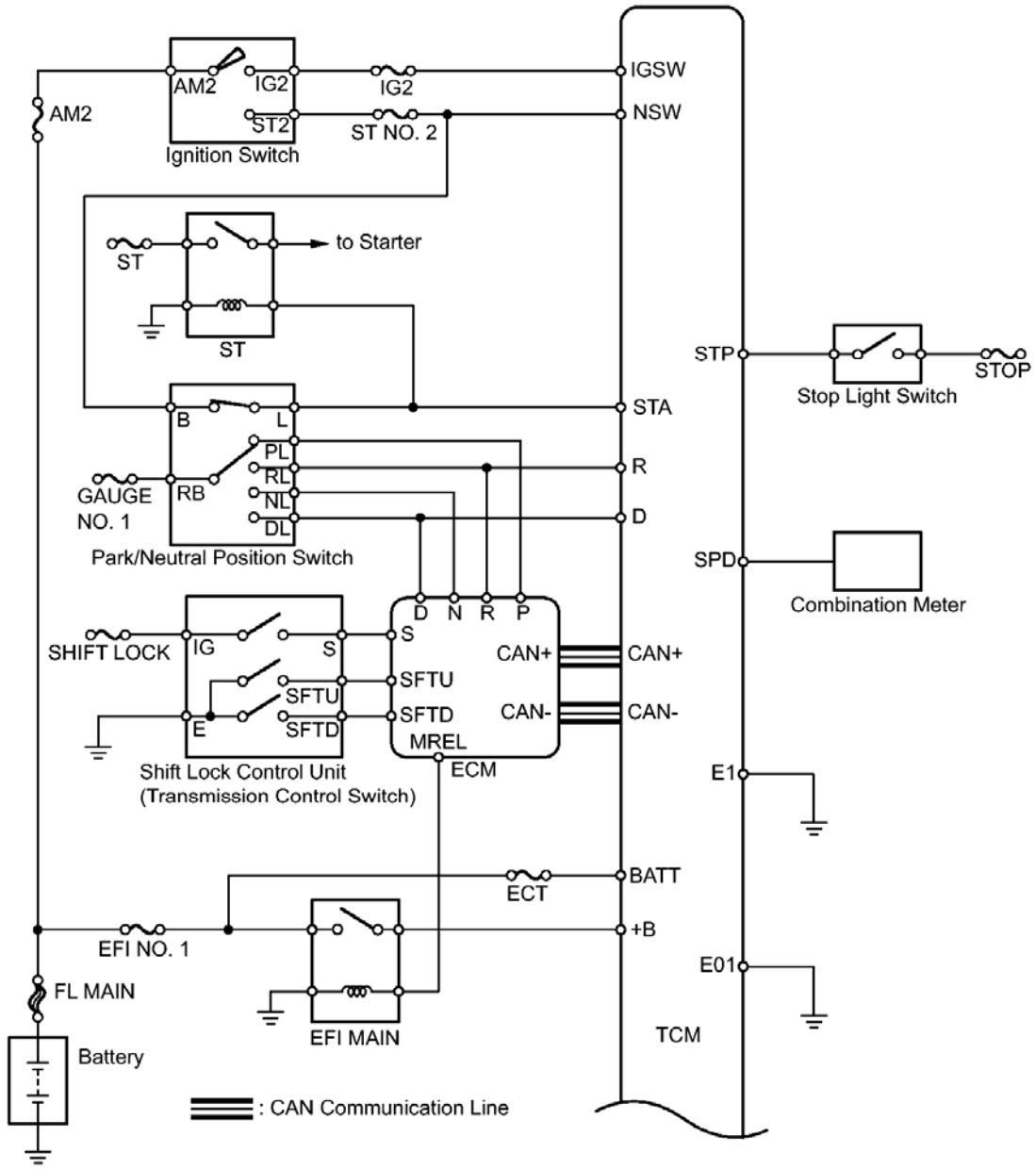

Fig. 4: Automatic Transaxle System Diagram (2 Of 4)
Courtesy of TOYOTA MOTOR SALES, U.S.A., INC.

w/ Smart Key System:

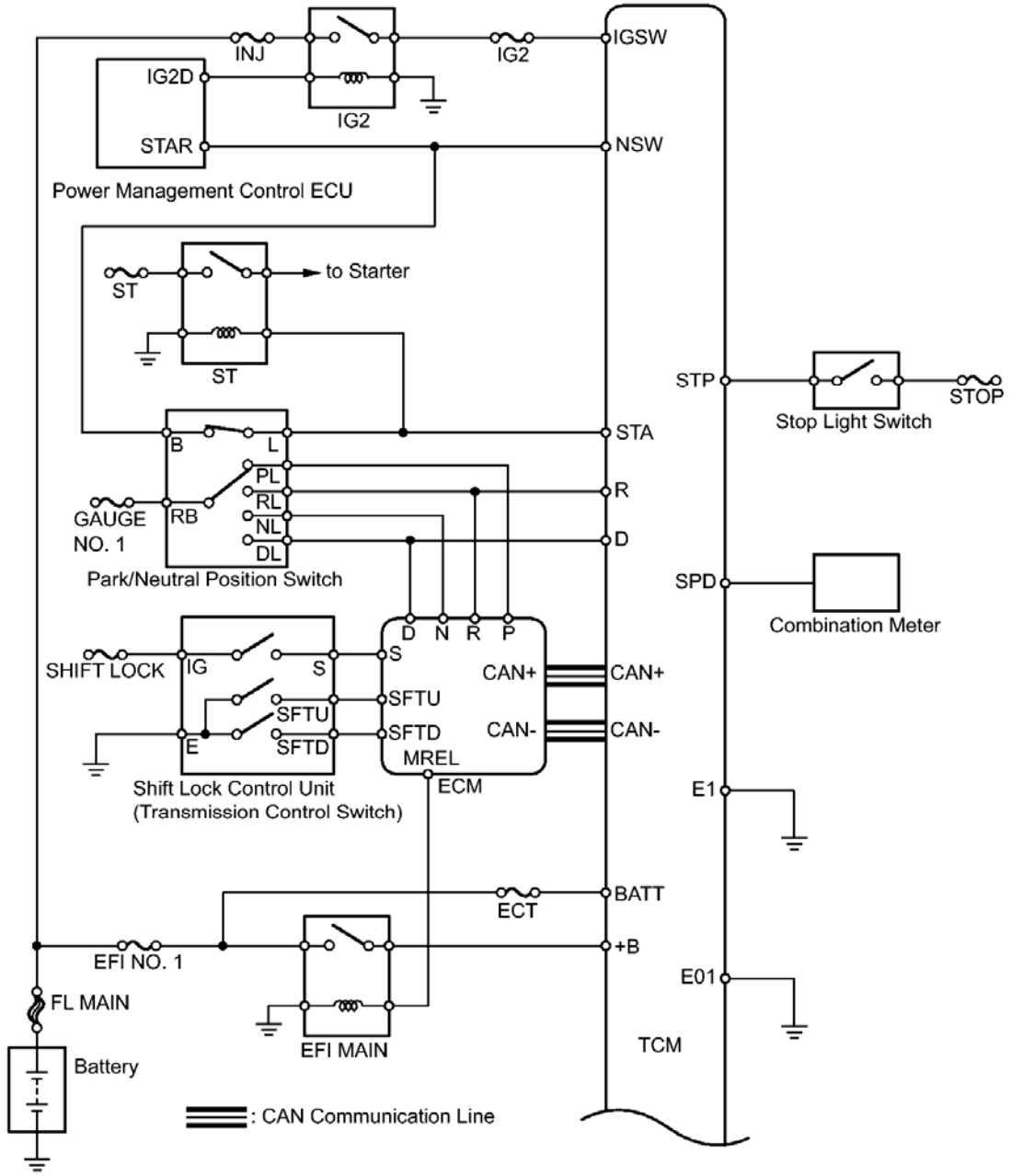

<u>Fig. 5: Automatic Transaxle System Diagram (3 Of 4)</u>
Courtesy of TOYOTA MOTOR SALES, U.S.A., INC.

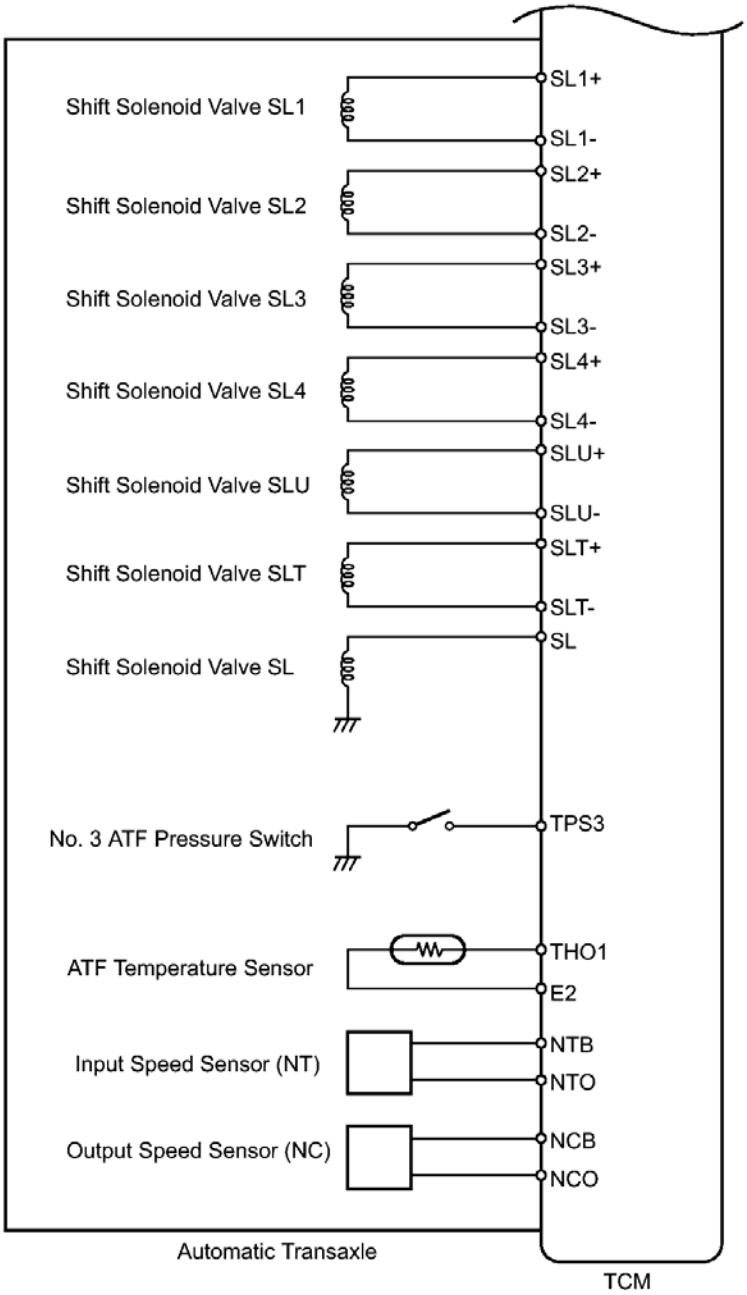

Fig. 6: Automatic Transaxle System Diagram (4 Of 4)
Courtesy of TOYOTA MOTOR SALES, U.S.A., INC.

SYSTEM DESCRIPTION

SYSTEM DESCRIPTION

1. **SYSTEM DESCRIPTION**

a. The Electronic Controlled Automatic Transaxle (ECT) is an automatic transaxle that has its shift timing electronically controlled by the Transmission Control Module (TCM). The TCM detects electrical signals that indicate engine and driving conditions, and controls the shift point, based on driver's habits and road conditions. As a result, fuel efficiency and transaxle performance are improved.

   Shift shock has been reduced by controlling the engine and transaxle simultaneously.

   In addition, the ECT has features such as:

   - Diagnostic function.
   - Fail-safe function for use when a malfunction occurs.

HOW TO PROCEED WITH TROUBLESHOOTING

HOW TO PROCEED WITH TROUBLESHOOTING

HINT:

- The TCM of this system is connected to the CAN communication system. Therefore, before starting troubleshooting, make sure to check that there is no trouble in the CAN and multiplex communication system.
- *: Use the Techstream.

1. **VEHICLE BROUGHT TO WORKSHOP**

   NEXT: Go to next step

2. **CUSTOMER PROBLEM ANALYSIS**
   a. Refer to Customer Problem Analysis. Refer to **GENERAL INFORMATION** .

      NEXT: Go to next step

3. **INSPECT BATTERY VOLTAGE**

   Standard voltage

   11 to 14 V

   If the voltage is below 11 V, recharge or replace the battery before proceeding.

   NEXT: Go to next step

4. **CONNECT TECHSTREAM TO DLC3***

   NEXT: Go to next step

5. **CHECK AND CLEAR DTCS AND FREEZE FRAME DATA***
   a. Refer to DTC Check / Clear. Refer to **DTC CHECK / CLEAR**.

      NEXT: Go to next step

6. **VISUAL INSPECTION**

   NEXT: Go to next step

7. **SELECT CHECK MODE DIAGNOSIS***
   a. Refer to Check Mode Procedure. Refer to **CHECK MODE PROCEDURE**.

      NEXT: Go to next step

8. **PROBLEM SYMPTOM CONFIRMATION**
   a. Refer to Road Test. Refer to **ROAD TEST**.

      RESULT

Result	Proceed to
Symptom does not occur	A
Symptom occurs	B

      B --> GO TO STEP 10

      A: Go to next step

9. **SYMPTOM SIMULATION**
   a. Refer to Symptom Simulation. Refer to **HOW TO PROCEED WITH TROUBLESHOOTING** .

      NEXT: Go to next step

10. **DTC CHECK***
   a. Refer to DTC Check / Clear. Refer to **DTC CHECK / CLEAR**.

      RESULT

Result	Proceed to
DTC is not output	A
DTC	

is output	B

B --> GO TO STEP 18

A: Go to next step

11. **BASIC INSPECTION**
    a. Refer to Automatic Transmission Fluid. Refer to **ADJUSTMENT** .
    b. Refer to Park/Neutral Position Switch. Refer to **ADJUSTMENT** .
    c. Refer to Shift Lever Assembly. Refer to **ADJUSTMENT** .

    NG --> GO TO STEP 21

    OK: Go to next step

12. **MECHANICAL SYSTEM TESTS**
    a. Refer to Mechanical System Tests. Refer to **MECHANICAL SYSTEM TESTS**.

    NG --> GO TO STEP 17

    OK: Go to next step

13. **HYDRAULIC TEST**
    a. Refer to Hydraulic Test. Refer to **HYDRAULIC TEST**.

    NG --> GO TO STEP 17

    OK: Go to next step

14. **MANUAL SHIFTING TEST**
    a. Refer to Manual Shifting Test. Refer to **MANUAL SHIFTING TEST**.

    NG --> GO TO STEP 16

    OK: Go to next step

15. **PROBLEM SYMPTOMS TABLE CHAPTER 1**
    a. Refer to **PROBLEM SYMPTOMS TABLE**.

    NG --> GO TO STEP 19

    OK: Go to next step

16. **PROBLEM SYMPTOMS TABLE CHAPTER 2**

a. Refer to **PROBLEM SYMPTOMS TABLE**.

NEXT: Go to next step

17. **COMPONENT INSPECTION**

NEXT --> GO TO STEP 21

18. **DTC CHART**
    a. Refer to Diagnostic Trouble Code Chart. Refer to **DIAGNOSTIC TROUBLE CODE CHART**.

NEXT: Go to next step

19. **CIRCUIT INSPECTION**

NEXT: Go to next step

20. **IDENTIFICATION OF PROBLEM**

NEXT: Go to next step

21. **REPAIR OR REPLACE**

NEXT: Go to next step

22. **CONFIRMATION TEST**

NEXT --> END

ROAD TEST

ROAD TEST

1. **PROBLEM SYMPTOM CONFIRMATION**
    a. Based on the result of the customer problem analysis, try to reproduce the symptoms. If the problem is that the transaxle does not shift up or down, or the shift point is too high or too low, conduct the following road test referring to the automatic shift schedule and attempt to duplicate the problem symptoms.
2. **ROAD TEST**
    a. Perform a road test.

WARNING: Check for safety before performing any tests.

NOTE:

- **Be sure to inspect and adjust the engine before performing**

these tests.

- **Perform the road test with the engine coolant temperature between 60 and 100°C (140 and 212°F) and the ATF temperature between 50 and 100°C (122 and 212°F).**
- **Perform these tests with the air conditioning and cruise control off.**

Inspection	Procedure
Transmission Control Switch Test	With the vehicle stationary and the shift lever in D, move the shift lever to S and return it to D. Check that the meter display changes from D to the appropriate S range and then back again.
S Position Test	With the vehicle stationary and the shift lever in S, move the shift lever to "+" and "-". Check that the meter display changes between S ranges properly.
D Position Shift Test	While driving the vehicle normally, check that the transmission shifts up and down through each gear properly.
	While driving

Lock-up Function	on a level surface at a constant speed in the lock-up range (90 km/h (56 mph) or more) with the shift lever in D, lightly depress the accelerator pedal and check that the engine speed does not change abruptly.
P Position Test	Stop the vehicle on an incline (approximately 5° or more). Then move the shift lever to P and release the parking brake. Check that the parking lock pawl holds the vehicle in place.
Abnormal Noise and Vibration	Check for abnormal noise and vibration while driving the vehicle forward and backward, and during shift operations.
Fluid Leakage	After performing all other road test inspections, check for fluid leakage.

MECHANICAL SYSTEM TESTS

MECHANICAL SYSTEM TESTS

1. **STALL SPEED TEST**

HINT:

This test is to check the overall performance of the engine and transaxle.

WARNING:

- **Driving test should be done on a paved surface (a surface that is not slippery).**
- **To ensure safety, perform this test in an open and level area that provides good traction.**
- **The stall speed test should always be performed with at least 2 people. One person should observe the condition of the wheels and wheel chocks while the other is performing the test.**

NOTE: **Do not perform the stall speed test for longer than 5 seconds.**

a. Connect the Techstream to the DLC3.
b. Run the vehicle until the transmission fluid temperature has reached 50 to 80°C (122 to 176°F).
c. Allow the engine to idle with the air conditioning and headlights off.
d. Chock all 4 wheels.
e. Set the parking brake and keep the brake pedal depressed firmly with your left foot.
f. Move the shift lever to D.
g. Depress the accelerator pedal as much as possible with your right foot.
h. Read the engine speed (stall speed) and release the accelerator pedal immediately.

Standard value

Stall Speed	
2720 RPM	+ 200 RPM
	- 490 RPM

EVALUATION

Test Result	Possible Cause
	• Engine

Stall speed is lower than standard value	power output may be insufficient • Stator one-way clutch is not operating properly **HINT:** If the value is less than the specified value by 600 RPM or more, the torque converter could be faulty.
Stall speed is higher than standard value	• Line pressure is too low • Clutch No. 1 (C1) is slipping • One-way clutch (F1) is not operating properly • Improper fluid level

2. **SHIFT TIME LAG TEST**

HINT:

When the shift lever is moved while the engine is idling, there will be a certain time lapse or lag before the shock can be felt. This is used for checking the condition of the clutch, and brake.

a. Connect the Techstream to the DLC3.
b. Run the vehicle until the transmission fluid temperature has reached 50 to 80°C (122 to 176°F).
c. Allow the engine to idle with the air conditioning off.
d. Set the parking brake and keep the brake pedal depressed firmly.
e. Check the D position time lag.
    1. Move the shift lever to N and wait for 1 minute.

2. Move the shift lever to D and measure the time until the shock is felt.
3. Repeat the 2 steps above 3 times, and calculate the average time of the 3 tests.

f. Check the R position time lag.
1. Move the shift lever to N and wait for 1 minute.
2. Move the shift lever to R and measure the time until the shock is felt.
3. Repeat the 2 steps above 3 times, and calculate the average time of the 3 tests.

Standard value

D position time lag is less than 1.2 seconds

R position time lag is less than 1.5 seconds

EVALUATION (IF N TO D OR N TO R TIME LAG IS LONGER THAN THE SPECIFIED TIME)

Test Result	Possible Cause
D position time lag exceeds standard value	• Line pressure is too low • Clutch No. 1 (C1) is worn • One-way clutch (F1) is not operating properly
R position time lag exceeds standard value	• Line pressure is too low • Brake No. 2 (B2) is worn • Brake No. 3 (B3) is worn

HYDRAULIC TEST

HYDRAULIC TEST

1. **PERFORM HYDRAULIC TEST**
    a. Measure the line pressure.

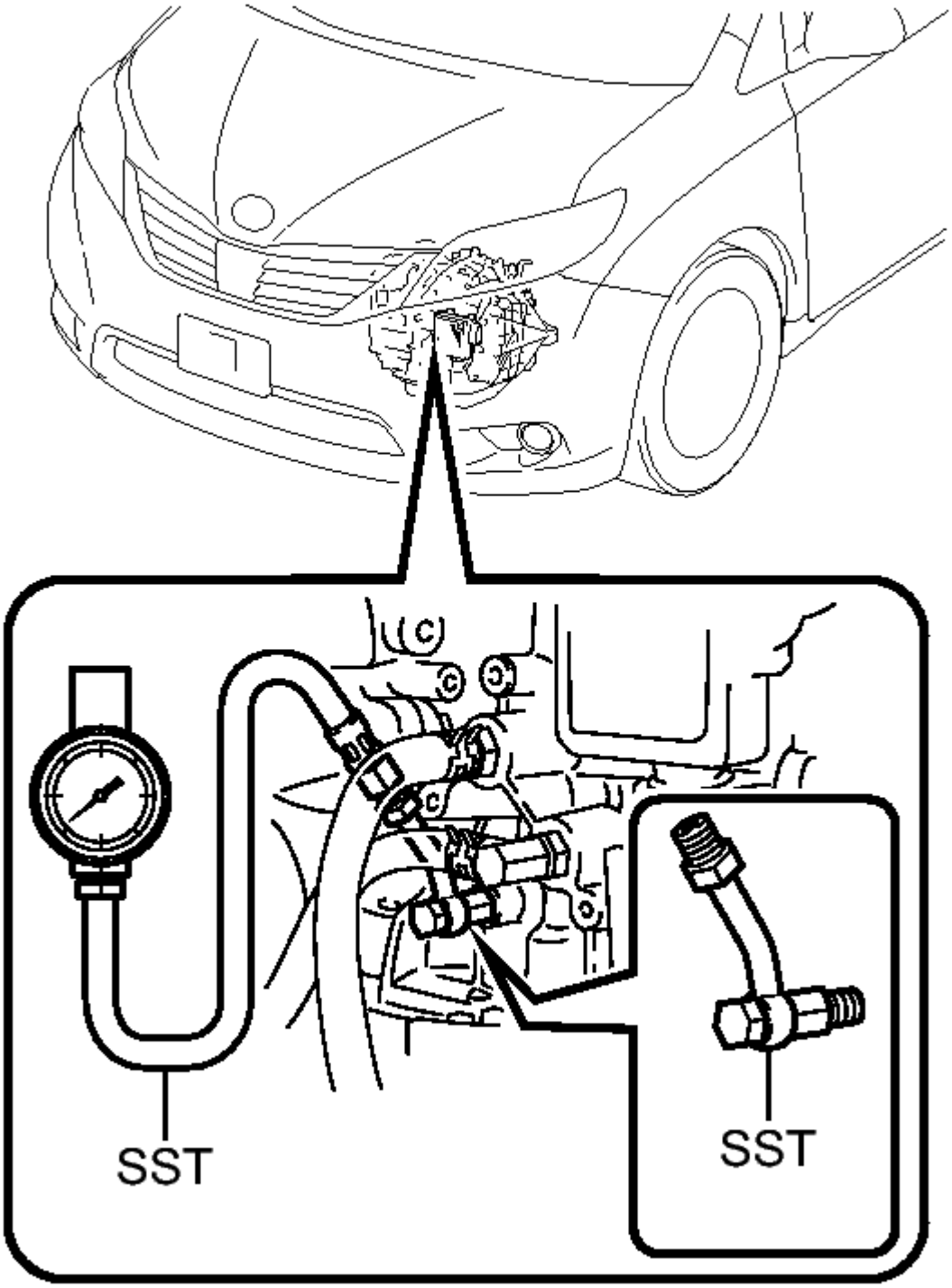

Fig. 7: Measuring Line Pressure Using SST
Courtesy of TOYOTA MOTOR SALES, U.S.A., INC.

WARNING: The line pressure test should always be carried out with at least 2 people. One person should observe the condition of

wheels and wheel chocks while the other is performing the test.

NOTE:

- **Perform a test at the normal operating Automatic Transmission Fluid (ATF) temperature: 50 to 80°C (122 to 176°F)**
- **Be careful to prevent the SST hose from interfering with the exhaust pipe.**
- **This check must be conducted after checking and confirming that the engine is normal.**
- **Perform the test with the A/C off.**
- **Do not perform the stall test for longer than 5 seconds.**

1. Warm up the Automatic Transmission Fluid (ATF).
2. Lift the vehicle up.
3. Remove the engine under cover.
4. Remove the test plug on the transaxle case front left side and install the SST.
   - **SST: 09992-00095**
     09992-00231
     09992-00271
5. Lower the vehicle.
6. Fully apply the parking brake and chock the 4 wheels.
7. Connect the Techstream to the DLC3.
8. Start the engine.
9. Enter the following menus: Powertrain / ECT / Active Test / Control the Shift Position.
10. Move the shift lever to D, and then use the Techstream to hold 3rd gear using Active Test. Measure the line pressure while the engine is idling.

    Specified Line Pressure

Condition	**D Position kPa (kgf/cm^2 , psi)**
Idling	360 to 430 kPa (3.7 to 4.4 kgf/cm^2 , 52 to 62 psi)

11. Turn the ignition switch off.

12. Disconnect the connector of the TCM.

    HINT:

    Disconnect the connector only when performing the D position stall test.

13. Start the engine.
14. Firmly depress the brake pedal, move the shift lever to D, depress the accelerator pedal all the way down, and check the line pressure while the stall test is performed.

    Specified Line Pressure

Condition	**D Position kPa (kgf/cm^2, psi)**
Stall test	1160 to 1350 kPa (11.8 to 13.8 kgf/cm^2, 168 to 196 psi)

15. Turn the ignition switch off.
16. Connect the TCM connector, depress the brake pedal firmly, move the shift lever to R, and check the line pressure while the engine is idling and during the stall test.

    Specified Line Pressure

Condition	**R Position kPa (kgf/cm^2, psi)**
Idling	800 to 950 kPa (8.2 to 9.7 kgf/cm^2, 116 to 138 psi)
	1900 to 2200 kPa (19.4 to

Stall test	22.4 kgf/cm^2 , 276 to 319 psi)

17. Remove the SST, install the test plug.
18. Clear the DTCs.

EVALUATION

Test Result	Possible Cause
Measured values are higher than the specified value in all positions	• Shift solenoid valve (SLT) defective • Regulator valve defective
Measured values are lower than the specified value in all positions	• Shift solenoid valve (SLT) defective • Regulator valve defective • Oil pump defective
Pressure is low in D only	• D position circuit fluid leak • Clutch No. 1 (C1) defective
Pressure is low in	• R position circuit fluid leak • Brake No. 2

R only	(B2) defective • Brake No. 3 (B3) defective

MANUAL SHIFTING TEST

MANUAL SHIFTING TEST

1. **PERFORM MANUAL SHIFTING TEST**

   HINT:

   - Using this test, it can be determined whether a problem is in an electrical circuit or if it is a mechanical problem in the transaxle.
   - If any abnormalities are found in the following test, the problem is in the transaxle itself.

   a. Disconnect the connector of the TCM.

      HINT:

      It is possible to deactivate the electrical shift control by disconnecting the TCM connector. The gears can then be changed mechanically with the shift lever.

   b. Drive with the TCM connector disconnected. Move the shift lever to each position to check whether the gear changes as shown in the table below.

Shift Lever Position	Gear
P	P
R	R
D	3rd No Shift (Gears will not change)

   c. Connect the connector of the TCM.

   d. Clear the DTCs. Refer to **DTC CHECK / CLEAR**.

REGISTRATION

REGISTRATION

NOTE:

- **When the automatic transaxle is replaced, the transaxle compensation code must be input into the TCM (proceed to Procedure 1). After the automatic transaxle is reinstalled, the Quick Response (QR) code label will be positioned where the code cannot be read. Therefore, before reinstalling the automatic transaxle, record the transaxle compensation codes or input them in the Techstream.**
- **When the TCM is replaced, the existing transaxle compensation codes must be input into the new TCM (proceed to Procedure 2).**

1. **INPUT TRANSAXLE COMPENSATION CODE INTO TCM (Procedure 1)**

NOTE: **Transaxle compensation codes are unique, 60-digit alphanumeric values printed on a QR label on the transaxle. If an incorrect transaxle compensation code is input into the TCM, shift shock may occur.**

a. Record the transaxle compensation code specified on the QR label.

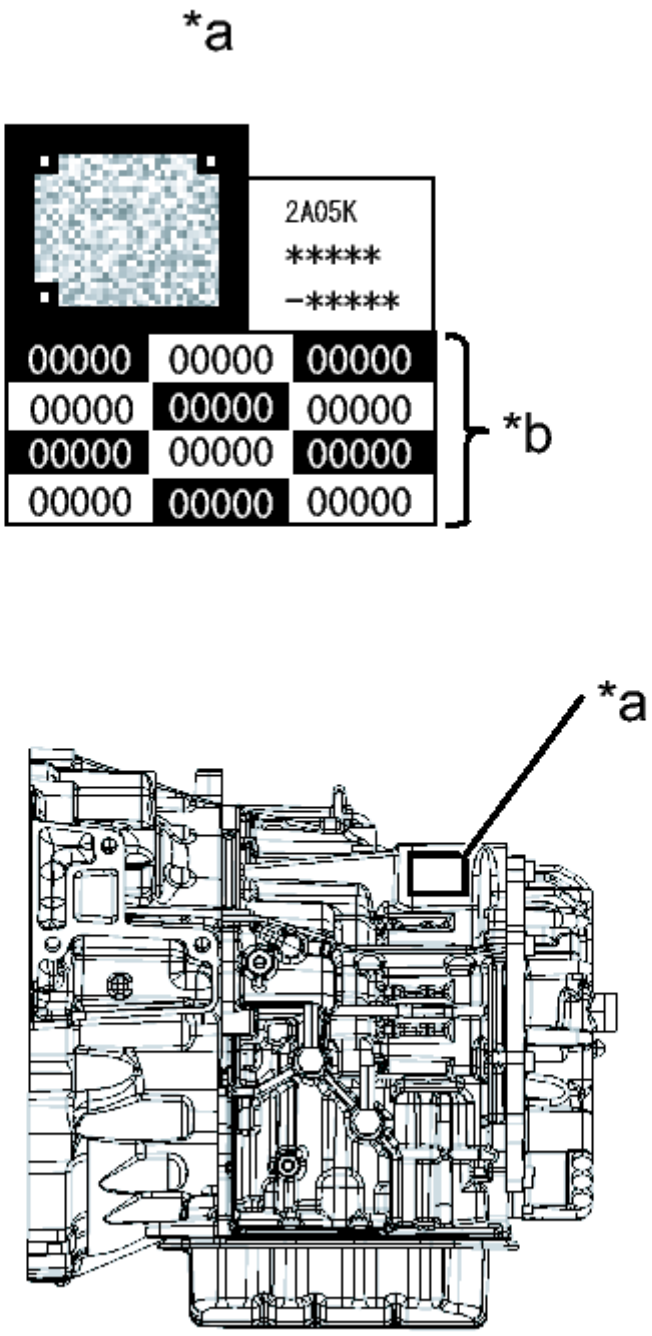

Fig. 8: Identifying Transaxle Compensation Code
Courtesy of TOYOTA MOTOR SALES, U.S.A., INC.

TEXT IN ILLUSTRATION

	QR Code

*a	label
*b	Transaxle Compensation Code

HINT:

The transaxle compensation code is imprinted on the QR label.

b. Move the shift lever to N or P.
c. Connect the Techstream to the DLC3.
d. Turn the ignition switch to ON.
e. Turn the Techstream on.

NOTE: Do not start the engine.

f. Enter the following menus: Powertrain / ECT / Utility / A/T Code Registration.
g. Select "Set Compensation Code".
h. Register the compensation code.
   1. Press "Input".
   2. Manually input the transaxle compensation code. The code is a 60-digit alphanumeric value printed on the QR label. After inputting the code, press "OK".
i. Check that the compensation code displayed on the screen is correct by comparing it with the 60-digit alphanumeric value on the QR label.

NOTE: If an incorrect transaxle compensation code is input into the TCM, shift shock will occur.

j. Press "NEXT" to set the compensation code to the TCM.

HINT:

- If the registration process fails, the compensation code may be incorrect. Check the compensation code again.
- If the attempted compensation code is correct, a problem with the wire harness or a bad connection with the DLC3 may cause a registration failure. Check the wire harness and the DLC3 connection. If no problem is found, the TCM may be malfunctioning. Check the TCM and repeat this operation.

k. Press "EXIT".

2. **TRANSFER TRANSAXLE COMPENSATION CODE (Procedure 2)**

NOTE: Transaxle compensation codes are 60-digit alphanumeric values imprinted on a QR label on the transaxle. If an incorrect transaxle compensation

code is input into the TCM, shift shock may occur.

HINT:

The following operation is available for use with TCMs that can transmit the registered transaxle compensation code to the Techstream.

a. Move the shift lever to N or P.
b. Connect the Techstream to the DLC3.
c. Turn the ignition switch to ON.
d. Turn the Techstream on.

NOTE: Do not start the engine.

HINT:

The transaxle compensation code is imprinted on the QR label.

e. Read the transaxle compensation code.
    1. Enter the following menus: Powertrain / ECT / Utility / A/T Code Registration.
    2. Select "Read Compensation Code".
    3. Press "Save".
    4. Press "Save" or "Overwrite".

    HINT:

    Press "Overwrite".

    NOTE: Do not use the code specified on the transaxle QR label even if the transaxle compensation code cannot be read using the Techstream. The code printed on an in-service transaxle may not match its current characteristics. Replace the TCM with a new one and perform a road test to allow the TCM to learn.

    5. Press "EXIT".
    6. Turn the ignition switch off.
f. Replace the TCM.
g. Set the transaxle compensation code.
    1. Turn the ignition switch to ON.
    2. Turn the Techstream on.
    3. Enter the following menus: Powertrain / ECT / Utility / A/T Code Registration.
    4. Select "Set Compensation Code".

5. Press "Open".
6. Press "Open" again to proceed.
7. Press "Exit".

INITIALIZATION

INITIALIZATION

1. **RESET TRANSAXLE COMPENSATION CODE**

NOTE:

- **If the following parts have been replaced, initialize the TCM and perform the following "Reset Memory" and "Perform Road Test to Allow TCM to learn" steps.**

  - Valve body assembly

  - Shift solenoid valve SL3

  - Shift solenoid valve SL4

  - TCM

- **The transaxle compensation code can only be initialized with the Techstream.**

HINT:

The TCM memorizes the condition that the ECT controls the automatic transaxle assembly according to those characteristics. Therefore, when the automatic transaxle assembly, or TCM has been replaced, it is necessary to reset the memory so that the TCM can memorize the new information. Reset procedure is as follows:

a. Move the shift lever to N or P.
b. Turn the ignition switch off.
c. Connect the Techstream to the DLC3.
d. Turn the ignition switch to ON.
e. Turn the Techstream on.
f. Enter the following menus: Powertrain / ECT / Utility / A/T Code Reset.
g. Press "Next" again to proceed.

NOTE: **After the transaxle compensation code is initialized, perform the following "Reset Memory" and "Perform Road Test to Allow TCM to learn" steps.**

h. Press "Exit".

2. **PERFORM ROAD TEST TO ALLOW TCM TO LEARN**

NOTE: Perform the following procedure while strictly observing all traffic laws and speed limits.

a. Warm up the engine.
b. Turn the ignition switch off.
c. Connect the Techstream to the DLC3.
d. Turn the ignition switch to ON.
e. Turn the Techstream on.
f. Enter the following menus: Powertrain / ECT / Data List / All Data / Throttle Position from EFI.
g. From a standstill, achieve highest possible speed with the accelerator pedal opened 15% or less. Keep the accelerator pedal angle steady while driving the vehicle.

HINT:

"Throttle Position from EFI": 15% or less

h. Repeat the previous step until shift shock no longer occurs.
i. From a standstill, achieve highest possible speed with the accelerator pedal opened 25% to 35%. Keep the accelerator pedal angle steady while driving the vehicle.

HINT:

"Throttle Position from EFI": 25% to 35%

j. Repeat the previous step until shift shock no longer occurs.

3. **RESET MEMORY**

NOTE: Reset Memory can be performed only with the Techstream.

HINT:

The TCM (ECT) memorizes the vehicle conditions when controlling the automatic transaxle assembly and engine assembly.

Therefore, when the automatic transaxle assembly, valve body assembly, shift solenoid valve SL3, shift solenoid valve SL4, or TCM has been replaced, it is necessary to reset the memory so that the TCM can memorize the new information.

a. Reset procedure is as follows.
    1. Turn the ignition switch off.

2. Connect the Techstream to the DLC3.
3. Turn the ignition switch to ON.
4. Turn the Techstream on.
5. Enter the following menus: "Powertrain / ECT / Utility / Reset Memory". Then, press "Next".

NOTE: **After performing Reset Memory, be sure to perform "Perform Road Test to Allow TCM to Learn" described earlier.**

MONITOR DRIVE PATTERN

MONITOR DRIVE PATTERN

1. **TEST MONITOR DRIVE PATTERN FOR ECT**

WARNING: **Perform this drive pattern on a level surface and strictly observe the posted speed limits and traffic laws while driving.**

HINT:

Performing this drive pattern is one method to simulate the TCM (ECT) malfunction detection conditions.

Some DTCs may not be detected through ordinary, everyday driving. Also, DTCs may not be detected through this drive pattern.

a. Preparation for driving
   1. Warm up the engine sufficiently (engine coolant temperature is 60°C (140°F) or higher).
   2. Drive the vehicle when the atmospheric temperature is -10°C (14°F) or higher.

      Some malfunctions are not detected when the atmospheric temperature is less than -10°C (14°F).

b. Drive pattern
   1. Drive the vehicle through all the gears.

      Stop --> 1st --> 2nd --> 3rd --> 4th --> 5th --> 6th --> 6th (lock-up ON).

   2. Confirm engine braking using the S position. While driving with S6 range selected and 6th gear operating with lock-up on, move the shift lever toward "-" to downshift from 6 to 5, 5 to 4, 4 to 3, 3 to 2, 2 to 1.
   3. Repeat the above drive pattern three times or more.

NOTE:

- **When using the Techstream, the monitor status can be checked in the Data List. Refer to <u>DATA LIST / ACTIVE TEST</u>.**

- **In the event that the drive pattern must be interrupted (due to traffic conditions or other factors), the drive pattern can be resumed and, in most cases, the monitor can be completed.**

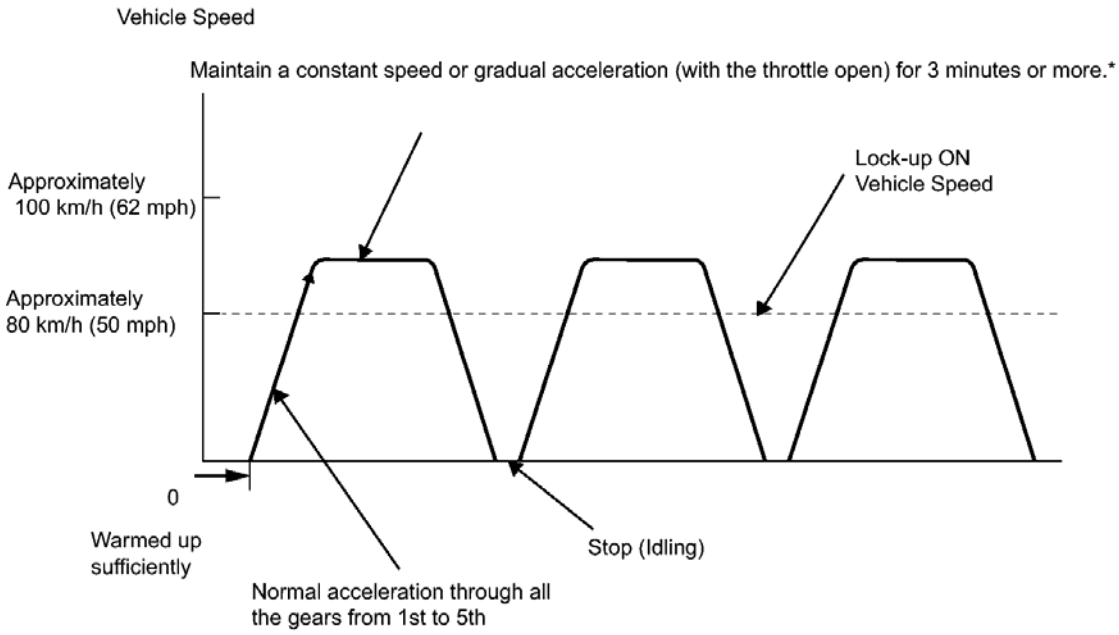

P

Fig. 9: Identifying Drive Pattern And Speed
Courtesy of TOYOTA MOTOR SALES, U.S.A., INC.

HINT:

*: Drive the vehicle at a speed in top gear that will cause lock-up to engage. The vehicle can be driven at a speed lower than that in the above diagram under the lock-up condition.

NOTE: **It is necessary to drive the vehicle for approximately 30 minutes to detect DTC P0711 (ATF temperature sensor malfunction).**

PROBLEM SYMPTOMS TABLE

PROBLEM SYMPTOMS TABLE

HINT:

- Use the table below to help determine the cause of problem symptoms. If multiple suspected areas are listed, the potential causes of the symptoms are listed in order of probability in the "Suspected Area" column of the table. Check each symptom by checking the suspected areas in the order they are listed. Replace parts as necessary.

- The Matrix Chart is divided into 2 chapters. When troubleshooting, check Chapter 1 first. If instructions are given in Chapter 1 to proceed to 2, proceed as instructed.
- If the instruction "Proceed to next suspected area shown in problem symptoms table" is given in the flowchart for each circuit, proceed to the next suspected area in the table.
- If the problem still occurs even though there are no malfunctions in any of the circuits, check the TCM and replace it if necessary.
- *1: When the circuit is defective, a DTC may be output.

1. CHAPTER 1: ELECTRONIC CIRCUIT MATRIX CHART

Symptom	Suspected Area	See
No up-shift (1st to 2nd)	Shift solenoid valve (SL3) circuit*1	Refer to **DTC P0798: Pressure Control Solenoid "C" Electrical (Shift Solenoid Valve SL3)**
	TCM	Refer to **ELECTRONIC CIRCUIT INSPECTION PROCEDURE**
No up-shift (2nd to 3rd)	Shift solenoid valve (SL4) circuit*1	Refer to **DTC P2810: Pressure Control Solenoid "G" Electrical (Shift Solenoid Valve SL4)**
	TCM	Refer to **ELECTRONIC CIRCUIT INSPECTION PROCEDURE**
No up-shift (3rd to 4th)	Shift solenoid valve (SL2) circuit*1	Refer to **DTC P0778: Pressure Control Solenoid "B" Electrical (Shift Solenoid Valve SL2)**
	Engine coolant temperature sensor circuit*1	Refer to **DIAGNOSTIC TROUBLE CODE CHART**
	TCM	Refer to **ELECTRONIC CIRCUIT INSPECTION PROCEDURE**
No up-shift (4th to 5th)	Shift solenoid valve (SL1) circuit*1	Refer to **DTC P0748: Pressure Control Solenoid "A" Electrical (Shift Solenoid Valve SL1)**
	Shift solenoid valve (SL4) circuit*1	Refer to **DTC P2810: Pressure Control Solenoid "G" Electrical (Shift Solenoid Valve SL4)**
	Engine coolant temperature sensor circuit*1	Refer to **DIAGNOSTIC TROUBLE CODE CHART**
	TCM	Refer to **ELECTRONIC CIRCUIT INSPECTION PROCEDURE**
No up-shift (5th to 6th)	Engine coolant temperature sensor circuit*1	Refer to **DIAGNOSTIC TROUBLE CODE CHART**
	Shift solenoid valve (SL3) circuit*1	Refer to **DTC P0798: Pressure Control Solenoid "C" Electrical (Shift Solenoid Valve SL3)**
	Shift solenoid valve (SL4) circuit*1	Refer to **DTC P2810: Pressure Control Solenoid "G" Electrical (Shift**

		Solenoid Valve SL4)
	TCM	Refer to **ELECTRONIC CIRCUIT INSPECTION PROCEDURE**
No down-shift (6th to 5th)	Shift solenoid valve (SL4) circuit*1	Refer to **DTC P2810: Pressure Control Solenoid "G" Electrical (Shift Solenoid Valve SL4)**
	TCM	Refer to **ELECTRONIC CIRCUIT INSPECTION PROCEDURE**
No down-shift (5th to 4th)	Shift solenoid valve (SL1) circuit*1	Refer to **DTC P0748: Pressure Control Solenoid "A" Electrical (Shift Solenoid Valve SL1)**
	TCM	Refer to **ELECTRONIC CIRCUIT INSPECTION PROCEDURE**
No down-shift (4th to 3rd)	Shift solenoid valve (SL2) circuit*1	Refer to **DTC P0778: Pressure Control Solenoid "B" Electrical (Shift Solenoid Valve SL2)**
	Shift solenoid valve (SL4) circuit*1	Refer to **DTC P2810: Pressure Control Solenoid "G" Electrical (Shift Solenoid Valve SL4)**
	TCM	Refer to **ELECTRONIC CIRCUIT INSPECTION PROCEDURE**
No down-shift (3rd to 2nd)	Shift solenoid valve (SL4) circuit*1	Refer to **DTC P2810: Pressure Control Solenoid "G" Electrical (Shift Solenoid Valve SL4)**
	Shift solenoid valve (SL3) circuit*1	Refer to **DTC P0798: Pressure Control Solenoid "C" Electrical (Shift Solenoid Valve SL3)**
	TCM	Refer to **ELECTRONIC CIRCUIT INSPECTION PROCEDURE**
No down-shift (2nd to 1st)	Shift solenoid valve (SL3) circuit*1	Refer to **DTC P0798: Pressure Control Solenoid "C" Electrical (Shift Solenoid Valve SL3)**
	TCM	Refer to **ELECTRONIC CIRCUIT INSPECTION PROCEDURE**
No lock-up	Shift solenoid valve (SLU) circuit*1	Refer to **DTC P2759: Torque Converter Clutch Pressure Control Solenoid Control Circuit Electrical (Shift Solenoid Valve SLU)**
	Shift solenoid valve (SL) circuit*1	Refer to **DTC P2769: Short in Torque Converter Clutch Solenoid Circuit (Shift Solenoid Valve SL); DTC P2770: Open in Torque Converter Clutch Solenoid Circuit (Shift Solenoid Valve SL)**
	Engine coolant temperature	Refer to **DIAGNOSTIC TROUBLE**

	sensor circuit*1	**CODE CHART**
	Stop light switch circuit*1	Refer to **DTC P0724: Brake Switch "B" Circuit High**
	Input speed sensor NT circuit*1	Refer to **DTC P0715: Input / Turbine Speed Sensor Circuit Malfunction; DTC P0717: Input Speed Sensor Circuit No Signal**
	TCM	Refer to **ELECTRONIC CIRCUIT INSPECTION PROCEDURE**
No lock-up off	TCM	Refer to **ELECTRONIC CIRCUIT INSPECTION PROCEDURE**
Shift point too high or too low	Shift solenoid valve (SLT) circuit*1	Refer to **DTC P2716: Pressure Control Solenoid "D" Electrical (Shift Solenoid Valve SLT)**
	Input speed sensor NT circuit*1	Refer to **DTC P0715: Input / Turbine Speed Sensor Circuit Malfunction; DTC P0717: Input Speed Sensor Circuit No Signal**
	Output speed sensor NC circuit*1	Refer to **DTC P0791: Intermediate Shaft Speed Sensor "A" Circuit; DTC P0793: Intermediate Shaft Speed Sensor "A"**
	Accelerator pedal position sensor circuit*1	Refer to **DIAGNOSTIC TROUBLE CODE CHART**
	ATF temperature sensor circuit*1	Refer to **DTC P0712: Transmission Fluid Temperature Sensor "A" Circuit Low Input; DTC P0713: Transmission Fluid Temperature Sensor "A" Circuit High Input**
	TCM	Refer to **ELECTRONIC CIRCUIT INSPECTION PROCEDURE**
Up-shift from 3rd to 4th while engine is cold	Engine coolant temperature sensor circuit*1	Refer to **DIAGNOSTIC TROUBLE CODE CHART**
	TCM	Refer to **ELECTRONIC CIRCUIT INSPECTION PROCEDURE**
Up-shift from 4th to 5th while engine is cold	Engine coolant temperature sensor circuit*1	Refer to **DIAGNOSTIC TROUBLE CODE CHART**
	TCM	Refer to **ELECTRONIC CIRCUIT INSPECTION PROCEDURE**
No gear change by moving shift lever to "+" or "-" while in S	Transmission control switch circuit	Refer to **Transmission Control Switch Circuit**
	ECM	Refer to **ELECTRONIC CIRCUIT INSPECTION PROCEDURE**
	TCM	Refer to **ELECTRONIC CIRCUIT INSPECTION PROCEDURE**

Harsh engagement (N to D)	Shift solenoid valve (SL1) circuit*1	Refer to **DTC P0748: Pressure Control Solenoid "A" Electrical (Shift Solenoid Valve SL1)**
	TCM	Refer to **ELECTRONIC CIRCUIT INSPECTION PROCEDURE**
Harsh engagement (Lock-up)	Input speed sensor NT circuit*1	Refer to **DTC P0715: Input / Turbine Speed Sensor Circuit Malfunction; DTC P0717: Input Speed Sensor Circuit No Signal**
	Output speed sensor NC circuit*1	Refer to **DTC P0791: Intermediate Shaft Speed Sensor "A" Circuit; DTC P0793: Intermediate Shaft Speed Sensor "A"**
	Shift solenoid valve (SLU) circuit*1	Refer to **DTC P2759: Torque Converter Clutch Pressure Control Solenoid Control Circuit Electrical (Shift Solenoid Valve SLU)**
	TCM	Refer to **ELECTRONIC CIRCUIT INSPECTION PROCEDURE**
Harsh engagement (Any driving position)	Accelerator pedal position sensor circuit*1	Refer to **DIAGNOSTIC TROUBLE CODE CHART**
	Shift solenoid valve (SLT) circuit*1	Refer to **DTC P2716: Pressure Control Solenoid "D" Electrical (Shift Solenoid Valve SLT)**
	Output speed sensor NC circuit*1	Refer to **DTC P0791: Intermediate Shaft Speed Sensor "A" Circuit; DTC P0793: Intermediate Shaft Speed Sensor "A"**
	Input speed sensor NT circuit*1	Refer to **DTC P0715: Input / Turbine Speed Sensor Circuit Malfunction; DTC P0717: Input Speed Sensor Circuit No Signal**
	TCM	Refer to **ELECTRONIC CIRCUIT INSPECTION PROCEDURE**
Poor acceleration	Shift solenoid valve (SLT) circuit*1	Refer to **DTC P2716: Pressure Control Solenoid "D" Electrical (Shift Solenoid Valve SLT)**
	TCM	Refer to **ELECTRONIC CIRCUIT INSPECTION PROCEDURE**
No engine braking	TCM	Refer to **ELECTRONIC CIRCUIT INSPECTION PROCEDURE**
No kick-down	TCM	Refer to **ELECTRONIC CIRCUIT INSPECTION PROCEDURE**
Engine stalls when starting off or stopping	TCM	Refer to **ELECTRONIC CIRCUIT INSPECTION PROCEDURE**

Shifting malfunction	Park/neutral position switch circuit*1	Refer to **DTC P0705: Transmission Range Sensor Circuit Malfunction (PRNDL Input)**
	Transmission control switch circuit	Refer to **Transmission Control Switch Circuit**
	ECM	Refer to **ELECTRONIC CIRCUIT INSPECTION PROCEDURE**
	TCM	Refer to **ELECTRONIC CIRCUIT INSPECTION PROCEDURE**
Shifting malfunction (Vehicle is stuck in 3rd or 5th gear)	ECU power source circuit	Refer to **ECU Power Source Circuit**
	TCM	Refer to **ELECTRONIC CIRCUIT INSPECTION PROCEDURE**
Slip or shudder (5th to 6th and 6th to 5th)	Shift solenoid valve (SLT) circuit*1	Refer to **DTC P2716: Pressure Control Solenoid "D" Electrical (Shift Solenoid Valve SLT)**
Initial acceleration or subsequent acceleration is improper. Vehicle is stuck in a gear (1st to 6th).	Shift solenoid valve (SL1) circuit*1	Refer to **DTC P0748: Pressure Control Solenoid "A" Electrical (Shift Solenoid Valve SL1)**
	Shift solenoid valve (SLT) circuit*1	Refer to **DTC P2716: Pressure Control Solenoid "D" Electrical (Shift Solenoid Valve SLT)**
	TCM	Refer to **ELECTRONIC CIRCUIT INSPECTION PROCEDURE**
Acceleration is improper when the gear is 4th or higher.	Shift solenoid valve (SL2) circuit*1	Refer to **DTC P0778: Pressure Control Solenoid "B" Electrical (Shift Solenoid Valve SL2)**
	Shift solenoid valve (SLT) circuit*1	Refer to **DTC P2716: Pressure Control Solenoid "D" Electrical (Shift Solenoid Valve SLT)**
	TCM	Refer to **ELECTRONIC CIRCUIT INSPECTION PROCEDURE**
Initial acceleration or subsequent acceleration is improper. Vehicle does not shift down (from 4th to 3rd). Vehicle is stuck in a gear (1st to 4th).	Shift solenoid valve (SL2) circuit*1	Refer to **DTC P0778: Pressure Control Solenoid "B" Electrical (Shift Solenoid Valve SL2)**
	TCM	Refer to **ELECTRONIC CIRCUIT INSPECTION PROCEDURE**
Acceleration is improper when the gear is 6th.	Shift solenoid valve (SL3) circuit*1	Refer to **DTC P0798: Pressure Control Solenoid "C" Electrical (Shift Solenoid Valve SL3)**
	TCM	Refer to **ELECTRONIC CIRCUIT INSPECTION PROCEDURE**
	Shift solenoid valve (SL4) circuit*1	Refer to **DTC P2810: Pressure Control Solenoid "G" Electrical (Shift Solenoid Valve SL4)**

Acceleration is improper when the gear is 3rd or 5th.	Shift solenoid valve (SLT) circuit*1	Refer to **DTC P2716: Pressure Control Solenoid "D" Electrical (Shift Solenoid Valve SLT)**
	TCM	Refer to **ELECTRONIC CIRCUIT INSPECTION PROCEDURE**
Initial acceleration or subsequent acceleration is improper. Vehicle does not shift down (from 3rd to 2nd). No up-shift (5th to 6th).	Shift solenoid valve (SL4) circuit*1	Refer to **DTC P2810: Pressure Control Solenoid "G" Electrical (Shift Solenoid Valve SL4)**
	TCM	Refer to **ELECTRONIC CIRCUIT INSPECTION PROCEDURE**

2. CHAPTER 2: ON-VEHICLE REPAIR AND OFF-VEHICLE REPAIR

Symptom	Suspected Area	See
Vehicle does not move in any forward or reverse positions.	Valve body assembly	Refer to **REMOVAL**
	Torque converter assembly	Refer to **INSPECTION**
Vehicle does not move with shift lever in R	Valve body assembly	Refer to **REMOVAL**
	Brake No. 2 (B2)	Refer to **COMPONENTS**
	Brake No. 3 (B3)	Refer to **COMPONENTS**
	Shift solenoid valve (SL4)*1	Refer to **DTC P2808: Pressure Control Solenoid "G" Performance (Shift Solenoid Valve SL4)**
No up-shift (1st to 2nd)	Valve body assembly	Refer to **REMOVAL**
	Brake No. 1 (B1)	Refer to **COMPONENTS**
	Shift solenoid valve (SL3)*1	Refer to **DTC P0796: Pressure Control Solenoid "C" Performance (Shift Solenoid Valve SL3)**
No up-shift (2nd to 3rd)	Valve body assembly	Refer to **REMOVAL**
	Brake No. 3 (B3)	Refer to **COMPONENTS**
	Shift solenoid valve (SL4)*1	Refer to **DTC P2808: Pressure Control Solenoid "G" Performance (Shift Solenoid Valve SL4)**
No up-shift (3rd to 4th)	Valve body assembly	Refer to **REMOVAL**
	Clutch No. 2 (C2)	Refer to **COMPONENTS**
	Shift solenoid valve (SL2)*1	Refer to **DTC P0776: Pressure Control Solenoid "B" Performance (Shift Solenoid Valve SL2)**
No up-shift (4th to 5th)	Valve body assembly	Refer to **REMOVAL**
	Brake No. 3 (B3)	Refer to **COMPONENTS**
	Shift solenoid valve (SL4)*1	Refer to **DTC P2808: Pressure Control Solenoid "G" Performance (Shift Solenoid Valve SL4)**
	Shift solenoid valve (SL1)*1	Refer to **DTC P0746: Pressure Control Solenoid "A" Performance (Shift Solenoid Valve SL1)**

No up-shift (5th to 6th)	Valve body assembly	Refer to **REMOVAL**
	Brake No. 1 (B1)	Refer to **COMPONENTS**
	Shift solenoid valve (SL3)*1	Refer to **DTC P0796: Pressure Control Solenoid "C" Performance (Shift Solenoid Valve SL3)**
	Shift solenoid valve (SL4)*1	Refer to **DTC P2808: Pressure Control Solenoid "G" Performance (Shift Solenoid Valve SL4)**
No down-shift (6th to 5th)	Brake No. 3 (B3)	Refer to **COMPONENTS**
	Shift solenoid valve (SL4)*1	Refer to **DTC P2808: Pressure Control Solenoid "G" Performance (Shift Solenoid Valve SL4)**
	Valve body assembly	Refer to **REMOVAL**
No down-shift (5th to 4th)	Shift solenoid valve (SL1)*1	Refer to **DTC P0746: Pressure Control Solenoid "A" Performance (Shift Solenoid Valve SL1)**
	Clutch No. 1 (C1)	Refer to **COMPONENTS**
	Valve body assembly	Refer to **REMOVAL**
No down-shift (4th to 3rd)	Brake No. 3 (B3)	Refer to **COMPONENTS**
	Shift solenoid valve (SL4)*1	Refer to **DTC P2808: Pressure Control Solenoid "G" Performance (Shift Solenoid Valve SL4)**
	Shift solenoid valve (SL2)*1	Refer to **DTC P0776: Pressure Control Solenoid "B" Performance (Shift Solenoid Valve SL2)**
	Valve body assembly	Refer to **REMOVAL**
No down-shift (3rd to 2nd)	Brake No. 1 (B1)	Refer to **COMPONENTS**
	Shift solenoid valve (SL3)*1	Refer to **DTC P0796: Pressure Control Solenoid "C" Performance (Shift Solenoid Valve SL3)**
	Shift solenoid valve (SL4)*1	Refer to **DTC P2808: Pressure Control Solenoid "G" Performance (Shift Solenoid Valve SL4)**
	Valve body assembly	Refer to **REMOVAL**
No down-shift (2nd to 1st)	Valve body assembly	Refer to **REMOVAL**
	Shift solenoid valve (SL3)*1	Refer to **DTC P0796: Pressure Control Solenoid "C" Performance (Shift Solenoid Valve SL3)**
No lock-up or No lock-up off	Valve body assembly	Refer to **REMOVAL**
	Torque converter assembly	Refer to **INSPECTION**
Harsh engagement (N to D)	Valve body assembly	Refer to **REMOVAL**
	C1 accumulator	Refer to **COMPONENTS**
	One-way clutch No. 1 (F1)	Refer to **COMPONENTS**
	Clutch No. 1 (C1)	Refer to **COMPONENTS**

	Shift solenoid valve (SL1)*1	Refer to **DTC P0746: Pressure Control Solenoid "A" Performance (Shift Solenoid Valve SL1)**
Harsh engagement (Lock-up)	Valve body assembly	Refer to **REMOVAL**
	Torque converter assembly	Refer to **INSPECTION**
	Shift solenoid valve (SLU)*1	Refer to **DTC P2757: Torque Converter Clutch Pressure Control Solenoid Performance (Shift Solenoid Valve SLU)**
Harsh engagement (N to R)	Valve body assembly	Refer to **REMOVAL**
	Brake No. 2 (B2)	Refer to **COMPONENTS**
	Brake No. 3 (B3)	Refer to **COMPONENTS**
	Shift solenoid valve (SL4)*1	Refer to **DTC P2808: Pressure Control Solenoid "G" Performance (Shift Solenoid Valve SL4)**
Harsh engagement (1 to 2 to 3 to 4 to 5 to 6)	Valve body assembly	Refer to **REMOVAL**
	Shift solenoid valve (SLT)*1	Refer to **DTC P2714: Pressure Control Solenoid "D" Performance (Shift Solenoid Valve SLT)**
Harsh engagement (1st to 2nd)	Valve body assembly	Refer to **REMOVAL**
	B1 accumulator	Refer to **COMPONENTS**
	Brake No. 1 (B1)	Refer to **COMPONENTS**
	Shift solenoid valve (SL3)*1	Refer to **DTC P0796: Pressure Control Solenoid "C" Performance (Shift Solenoid Valve SL3)**
Harsh engagement (2nd to 3rd)	Valve body assembly	Refer to **REMOVAL**
	B3 accumulator	Refer to **COMPONENTS**
	Brake No. 3 (B3)	Refer to **COMPONENTS**
	Shift solenoid valve (SL4)*1	Refer to **DTC P2808: Pressure Control Solenoid "G" Performance (Shift Solenoid Valve SL4)**
Harsh engagement (3rd to 4th)	Valve body assembly	Refer to **REMOVAL**
	C2 accumulator	Refer to **COMPONENTS**
	Clutch No. 2 (C2)	Refer to **COMPONENTS**
	Shift solenoid valve (SL2)*1	Refer to **DTC P0776: Pressure Control Solenoid "B" Performance (Shift Solenoid Valve SL2)**
Harsh engagement (4th to 5th)	Valve body assembly	Refer to **REMOVAL**
	B3 accumulator	Refer to **COMPONENTS**
	Brake No. 3 (B3)	Refer to **COMPONENTS**
	Shift solenoid valve (SL4)*1	Refer to **DTC P2808: Pressure Control Solenoid "G" Performance (Shift Solenoid Valve SL4)**
	Valve body assembly	Refer to **REMOVAL**

Harsh engagement (5th to 6th)	B1 accumulator	Refer to **COMPONENTS**
	Brake No. 1 (B1)	Refer to **COMPONENTS**
	Shift solenoid valve (SL3)*1	Refer to **DTC P0796: Pressure Control Solenoid "C" Performance (Shift Solenoid Valve SL3)**
Harsh engagement (6th to 5th)	Valve body assembly	Refer to **REMOVAL**
	B3 accumulator	Refer to **COMPONENTS**
	Brake No. 3 (B3)	Refer to **COMPONENTS**
	Shift solenoid valve (SL4)*1	Refer to **DTC P2808: Pressure Control Solenoid "G" Performance (Shift Solenoid Valve SL4)**
Slip or shudder (Forward and reverse: After warm-up)	Valve body assembly	Refer to **REMOVAL**
	Oil strainer	Refer to **COMPONENTS**
	Brake No. 1 (B1)	Refer to **COMPONENTS**
	Brake No. 2 (B2)	Refer to **COMPONENTS**
	Brake No. 3 (B3)	Refer to **COMPONENTS**
	One-way clutch No. 1 (F1)	Refer to **COMPONENTS**
	Clutch No. 1 (C1)	Refer to **COMPONENTS**
	Clutch No. 2 (C2)	Refer to **COMPONENTS**
Slip or shudder (Particular position: just after engine starts)	Torque converter assembly	Refer to **INSPECTION**
Slip or shudder (shift lever in R)	Brake No. 2 (B2)	Refer to **COMPONENTS**
	Brake No. 3 (B3)	Refer to **COMPONENTS**
Slip or shudder (1st)	One-way clutch No. 1 (F1)	Refer to **COMPONENTS**
	Clutch No. 1 (C1)	Refer to **COMPONENTS**
Slip or shudder (2nd)	Brake No. 1 (B1)	Refer to **COMPONENTS**
	Clutch No. 1 (C1)	Refer to **COMPONENTS**
Slip or shudder (3rd)	Brake No. 3 (B3)	Refer to **COMPONENTS**
	Clutch No. 1 (C1)	Refer to **COMPONENTS**
Slip or shudder (4th)	Clutch No. 1 (C1)	Refer to **COMPONENTS**
	Clutch No. 2 (C2)	Refer to **COMPONENTS**
Slip or shudder (5th)	Brake No. 3 (B3)	Refer to **COMPONENTS**
	Clutch No. 2 (C2)	Refer to **COMPONENTS**
Slip or shudder (6th)	Brake No. 1 (B1)	Refer to **COMPONENTS**
	Clutch No. 2 (C2)	Refer to **COMPONENTS**
No engine braking (1st)	Valve body assembly	Refer to **REMOVAL**
	Brake No. 2 (B2)	Refer to **COMPONENTS**
No engine braking (2nd)	Valve body assembly	Refer to **REMOVAL**
	Brake No. 1 (B1)	Refer to **COMPONENTS**
No engine braking (3rd)	Valve body assembly	Refer to **REMOVAL**
	Brake No. 3 (B3)	Refer to **COMPONENTS**

No engine braking (4th)	Valve body assembly	Refer to **REMOVAL**
	Clutch No. 2 (C2)	Refer to **COMPONENTS**
No kick-down	Valve body assembly	Refer to **REMOVAL**
Shift point too high or too low	Valve body assembly	Refer to **REMOVAL**
Poor acceleration (All positions)	Valve body assembly	Refer to **REMOVAL**
	Torque converter assembly	Refer to **INSPECTION**
Poor acceleration (6th)	Brake No. 1 (B1)	Refer to **COMPONENTS**
	Clutch No. 2 (C2)	Refer to **COMPONENTS**
Engine stalls when starting off or stopping	Valve body assembly	Refer to **REMOVAL**
	Torque converter assembly	Refer to **INSPECTION**

TERMINALS OF ECU

TERMINALS OF ECU

1. **TCM**

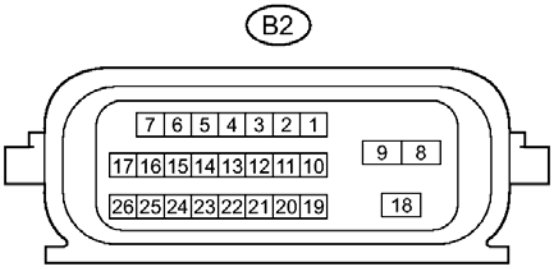

c

Fig. 10: ECU Connector Terminal Identification - TCM
Courtesy of TOYOTA MOTOR SALES, U.S.A., INC.

HINT:

Each TCM terminal standard voltage and resistance is shown in the table below.

In the table, first follow the information under "Condition". Look under "Terminal No. (Symbol)" for the terminals to be inspected. The standard voltage and resistance between the terminals is shown under "Specified Condition".

Use the illustration above as a reference for the TCM terminals.

Terminal No. (Symbol)	Wiring Color	Terminal Description	Condition	Specified Condition
B2-1 (BATT) - B2-8	G-R - BR	Battery (for measuring battery voltage	Always	11 to 14 V

(E1)		and for TCM memory)		
B2-3 (SPD) - B2-8 (E1)	LG - BR	Speed signal from combination meter	Vehicle speed 20 km/h (12 mph)	Pulse generation (See **Fig. 11**)
B2-6 (CAN+) - B2-8 (E1)	L - BR	CAN communication line	Ignition switch ON	Pulse generation (See **Fig. 12**)
B2-7 (CAN-) - B2-8 (E1)	R - BR	CAN communication line	Ignition switch ON	Pulse generation (See **Fig. 13**)
B2-8 (E1) - Body ground	BR - Body ground	Ground	Always	Below 1 ohms
B2-9 (E01) - Body ground	BR - Body ground	Ground	Always	Below 1 ohms
B2-10 (STA) - B2-8 (E1)	B - BR	Starter signal	Cranking (shift lever in P or N, Engine start)	11 to 14 V
			Ignition switch ON and shift lever in any position except P or N	Below 2 V
B2-11 (NSW) - B2-8 (E1)	P - BR	Park/neutral switch signal	Ignition switch ON and shift lever in P or N	Below 2 V
			Ignition switch ON and shift lever in any	11 to 14 V

			position except P or N	
B2-12 (STP) - B2-8 (E1)	W-L - BR	Stop light switch signal	Brake pedal is depressed	7.5 to 14 V
			Brake pedal is released	Below 1.5 V
B2-13 (IGSW) - B2-8 (E1)	G - BR	Ignition switch	Ignition switch ON	11 to 14 V
B2-15 (R) - B2-8 (E1)	R-B - BR	R shift position switch signal	Ignition switch ON and shift lever in R	11 to 14 V
			Ignition switch ON and shift lever in any position except R	Below 1 V
B2-16 (D) - B2-8 (E1)	Y - BR	D shift position switch signal	Ignition switch ON and shift lever in D or S	11 to 14 V
			Ignition switch ON and shift lever in any position except D and S	Below 1 V
B2-18 (+B) - B2-8 (E1)	L - BR	Power source of TCM	Ignition switch ON	11 to 14 V

a. Waveform 1

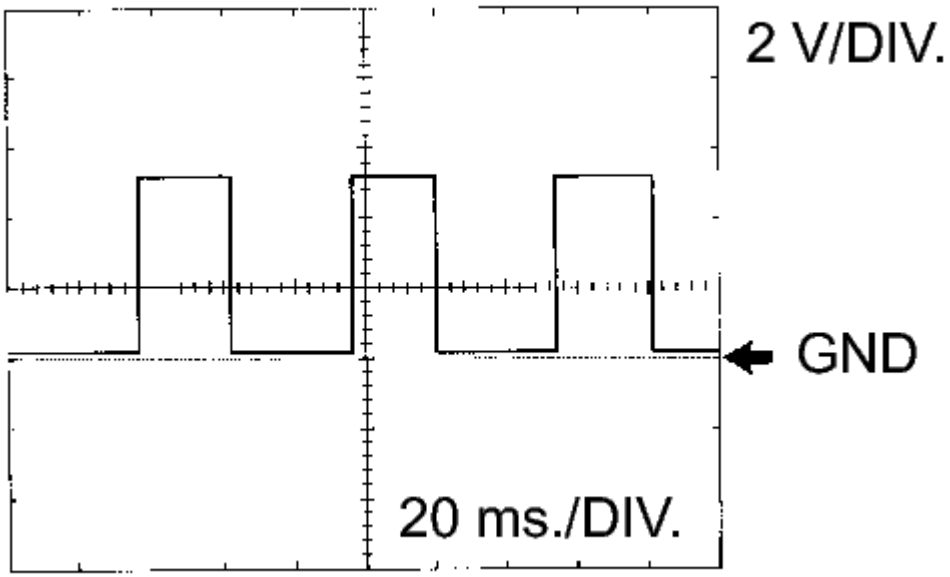

Fig. 11: Identifying Waveform 1
Courtesy of TOYOTA MOTOR SALES, U.S.A., INC.

Terminal	SPD - E1
Tool setting	2 V/DIV., 20 ms./DIV.
Vehicle condition	Vehicle speed 20 km/h (12 mph)

b. Waveform 2

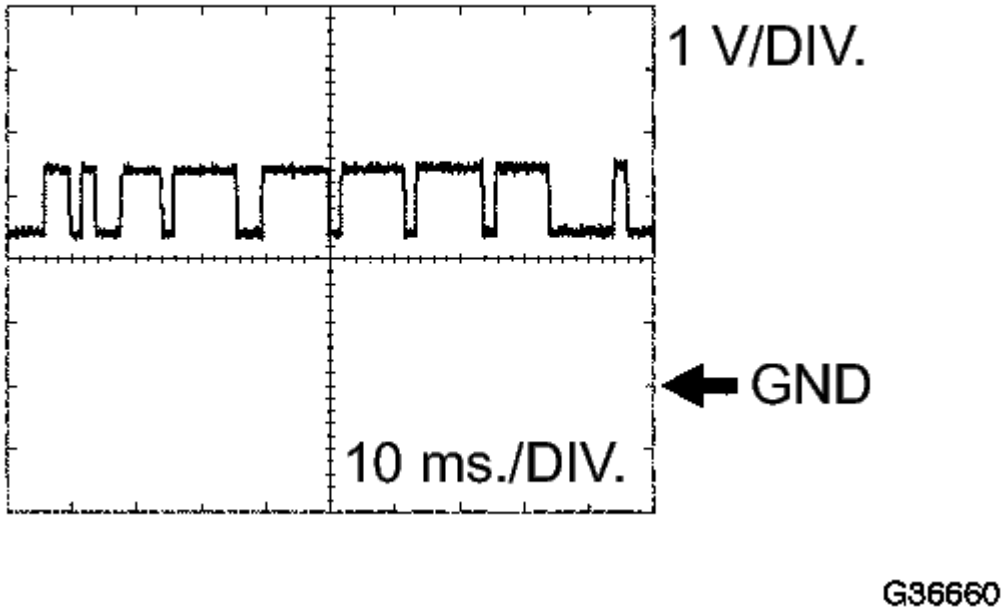

Fig. 12: Identifying Waveform 2
Courtesy of TOYOTA MOTOR SALES, U.S.A., INC.

Terminal	CAN+ - E1
Tool setting	1 V/DIV., 10 ms./DIV.
Vehicle condition	Engine is stopped, ignition switch ON

c. Waveform 3

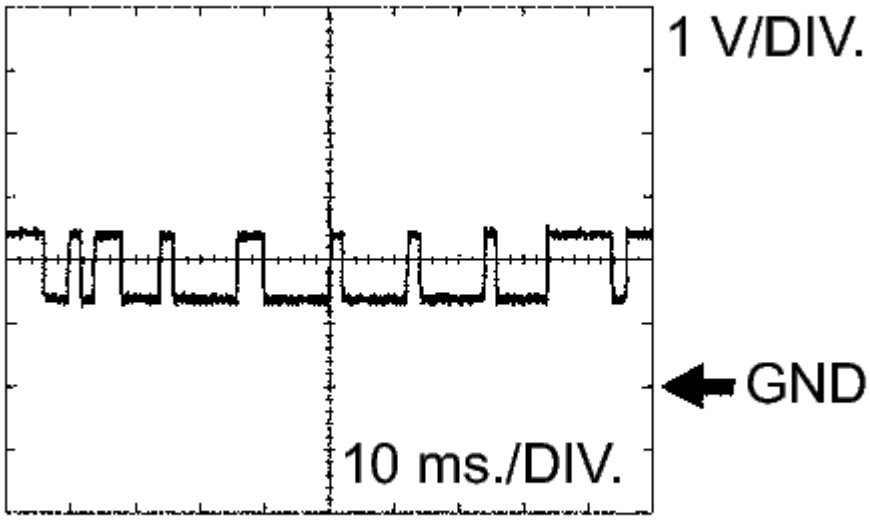

G36661

Fig. 13: Identifying Waveform 3
Courtesy of TOYOTA MOTOR SALES, U.S.A., INC.

Terminal	CAN- - E1
Tool setting	1 V/DIV., 10 ms./DIV.
Vehicle condition	Engine is stopped, ignition switch ON

2. **ECM**

HINT:

Each ECM terminal standard voltage is shown in the table below.

In the table, first follow the information under "Condition". Look under "Terminal No. (Symbol)" for the terminals to be inspected. The standard voltage between the terminals is shown under "Specified Condition".

Use the illustration below as a reference for the ECM terminals.

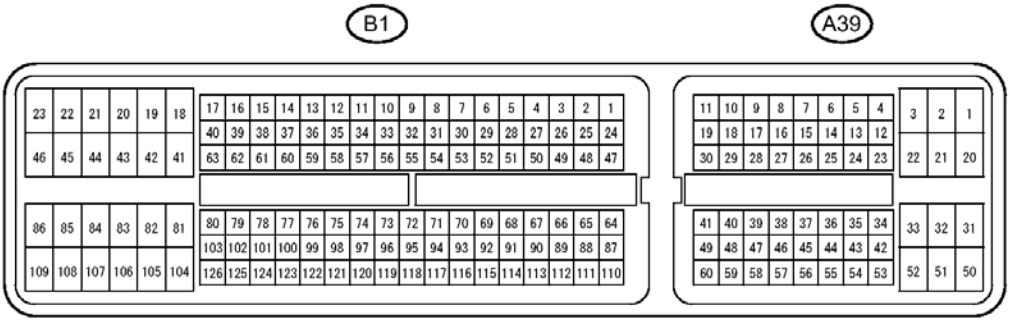

Fig. 14: ECM Connector Terminal Identification
Courtesy of TOYOTA MOTOR SALES, U.S.A., INC.

Terminal No. (Symbol)	Wiring Color	Terminal Description	Condition	Specified Condition
A39-25 (S) - B1-81 (E1)	W - BR	S shift position switch signal	Ignition switch ON and shift lever in S	11 to 14 V
			Ignition switch ON and shift lever in any position except S	Below 1 V
A39-27 (SFTD) - B1-81 (E1)	V - BR	Down shift switch signal	Ignition switch ON and shift lever in S	11 to 14 V
			Ignition switch ON and shift lever in "- " (Down shift)	Below 1 V
A39-38			Ignition switch ON and shift lever	11 to 14 V

(SFTU) - B1-81 (E1)	L - BR	Up shift switch signal	in S	
			Ignition switch ON and shift lever in "+" (Up shift)	Below 1 V

DIAGNOSIS SYSTEM

DIAGNOSIS SYSTEM

1. **DESCRIPTION**
   a. When troubleshooting On-Board Diagnostic (OBD II) vehicles, the vehicle must be connected to the OBD II scan tool (complying with SAE J1987). Various data output from the vehicle TCM can then be read.
   b. OBD II regulations require that the vehicle on-board computer illuminate the Malfunction Indicator Lamp (MIL) on the instrument panel when the computer detects a malfunction in:

P

Fig. 15: Identifying Malfunction Indicator Lamp
Courtesy of TOYOTA MOTOR SALES, U.S.A., INC.

1. The emission control system/components
2. The powertrain control components (which affect vehicle emissions)
3. The computer

In addition, the applicable Diagnostic Trouble Codes (DTCs) prescribed by SAE J2012 are recorded in the TCM memory.

When a malfunction does not reoccur, the MIL stays illuminated until the ignition switch is turned off, and the MIL turns off when the engine is started. However, the DTCs will remain recorded in the TCM memory.

c. To check DTCs, connect the Techstream to the Data Link Connector 3 (DLC3) of the vehicle. The Techstream displays DTCs, freeze frame data and a variety of engine data.

   The DTCs and freeze frame data can be cleared with the Techstream. Refer to **DTC CHECK / CLEAR**.

2. **NORMAL MODE AND CHECK MODE**
   a. The diagnosis system operates in "normal mode" during normal vehicle use. In normal mode, "2 trip detection logic" is used to ensure accurate detection of malfunctions. "Check mode" is also available to technicians as an option. In check mode, "1 trip detection logic" is used for simulating malfunction symptoms and increasing the system's ability to detect malfunctions, including intermittent malfunctions.
3. **2 TRIP DETECTION LOGIC**
   a. When a malfunction is first detected, the malfunction is temporarily stored in the TCM memory (1st trip). If the same malfunction is detected during the next drive cycle, the MIL is illuminated (2nd trip).
4. **FREEZE FRAME DATA**
   a. The TCM records vehicle and driving condition information as freeze frame data the moment a DTC is stored. When troubleshooting, freeze frame data can be helpful in determining whether the vehicle was running or stopped, whether the engine was warmed up or not, whether the air/fuel ratio was lean or rich, as well as other data recorded at the time of a malfunction.
   b. The Techstream records freeze frame data in 5 different instances: 1) 3 times before the DTC is set, 2) once when the DTC is set, and 3) once after the DTC is set. These sets of data can be used to simulate the vehicle condition around the time when the malfunction occurred. The data may help in finding the cause of the malfunction, or in judging if the DTC was caused by a temporary malfunction.

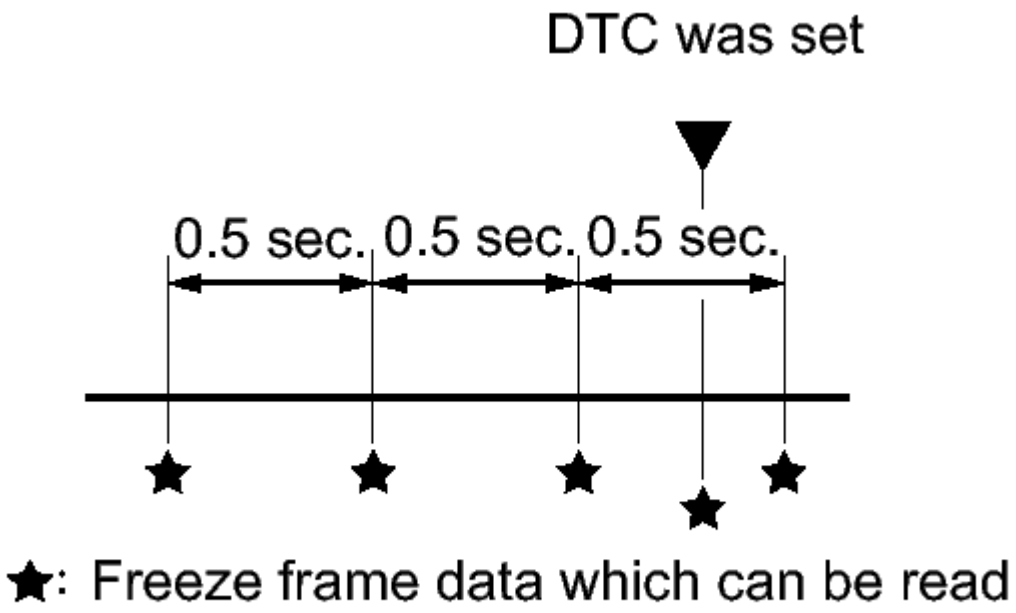

Fig. 16: Identifying Freeze Frame Data
Courtesy of TOYOTA MOTOR SALES, U.S.A., INC.

5. **CHECK DATA LINK CONNECTOR 3 (DLC3)**
   a. Check the DLC3. Refer to **GENERAL INFORMATION**
6. **CHECK MIL**
   a. Check that the MIL illuminates when turning the ignition switch to ON.

      If the MIL does not illuminate, there is a problem in the MIL circuit. Refer to **MIL Circuit** .

   b. When the engine is started, the MIL should turn off.

DTC CHECK / CLEAR

DTC CHECK / CLEAR

NOTE: **When the diagnosis system is changed from normal mode to check mode or vice versa, all DTCs and freeze frame data recorded in normal mode are cleared. Before changing modes, always check and make a note of DTCs and freeze frame data.**

HINT:

- DTCs which are stored in the TCM can be displayed on the Techstream. The Techstream can display the current, pending and permanent DTCs.
- If a malfunction is detected during the current driving cycle, current and permanent DTCs are stored.

- Some DTCs are not stored if the TCM does not detect the same malfunction again during a second consecutive driving cycle. However, such malfunctions, detected on only one occasion, are stored as pending DTCs.
- Current and pending DTCs can be cleared by using the Techstream or by disconnecting the cable from the negative battery terminal. However, permanent DTCs cannot be cleared using either of these two methods.
- After clearing current DTCs using the Techstream (or by disconnecting the cable from the negative battery terminal), permanent DTCs can be cleared when the system is determined to be normal for the relevant DTCs and then the universal trip is performed.

2 TRIP DETECTION EXAMPLES

Pending DTC	Store condition	Malfunction detected
	Clear condition	System determined to be normal or DTCs cleared using Techstream or Cable disconnected from negative battery terminal
Current DTC	Store condition	Malfunction detected (2nd trip)
	Clear condition	No malfunctions in 40 driving cycles or DTCs cleared using Techstream or Cable disconnected from negative battery terminal
Permanent DTC	Store condition	Malfunction detected (2nd trip)
	Clear condition	Ignition switch turned to ON after no malfunction is detected in 3 consecutive driving cycles or After DTCs cleared using Techstream or cable disconnected from negative battery terminal, malfunction not detected when universal trip driving performed
MIL	ON	Malfunction detected (2nd trip)
	OFF	Ignition switch turned to ON after no malfunction is detected in 3 consecutive driving cycles or DTCs cleared using Techstream or Cable disconnected from negative battery terminal

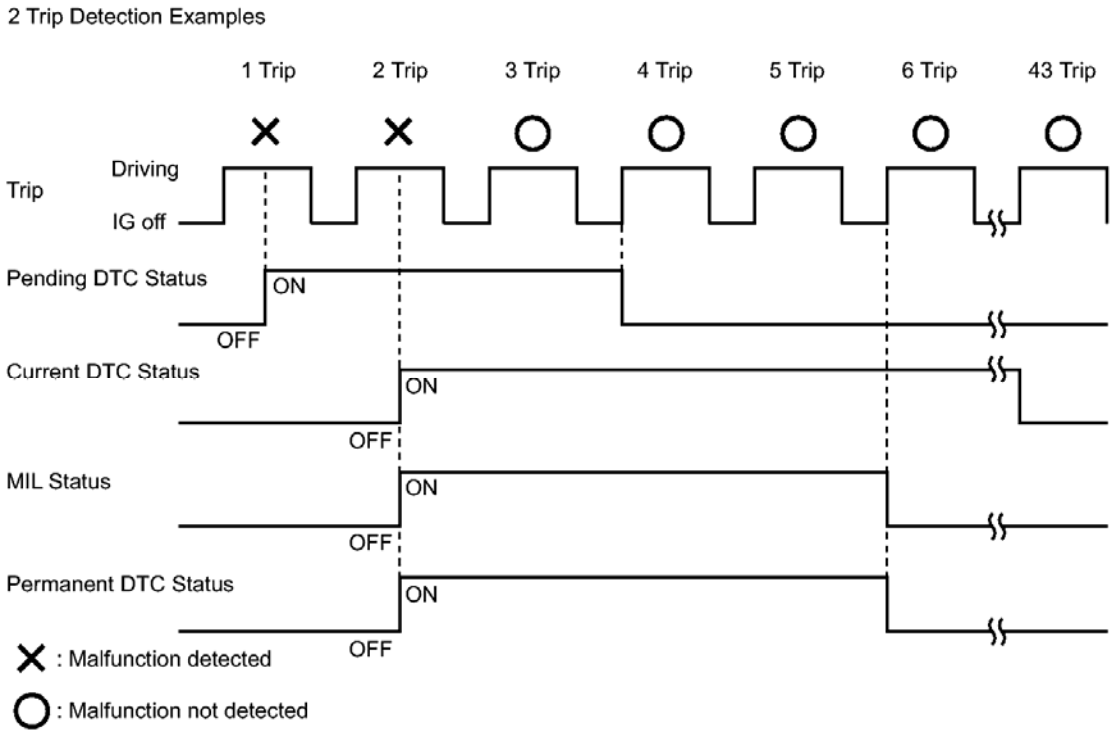

Fig. 17: Trip Detection Examples Blinking Pattern (1 Of 2)
Courtesy of TOYOTA MOTOR SALES, U.S.A., INC.

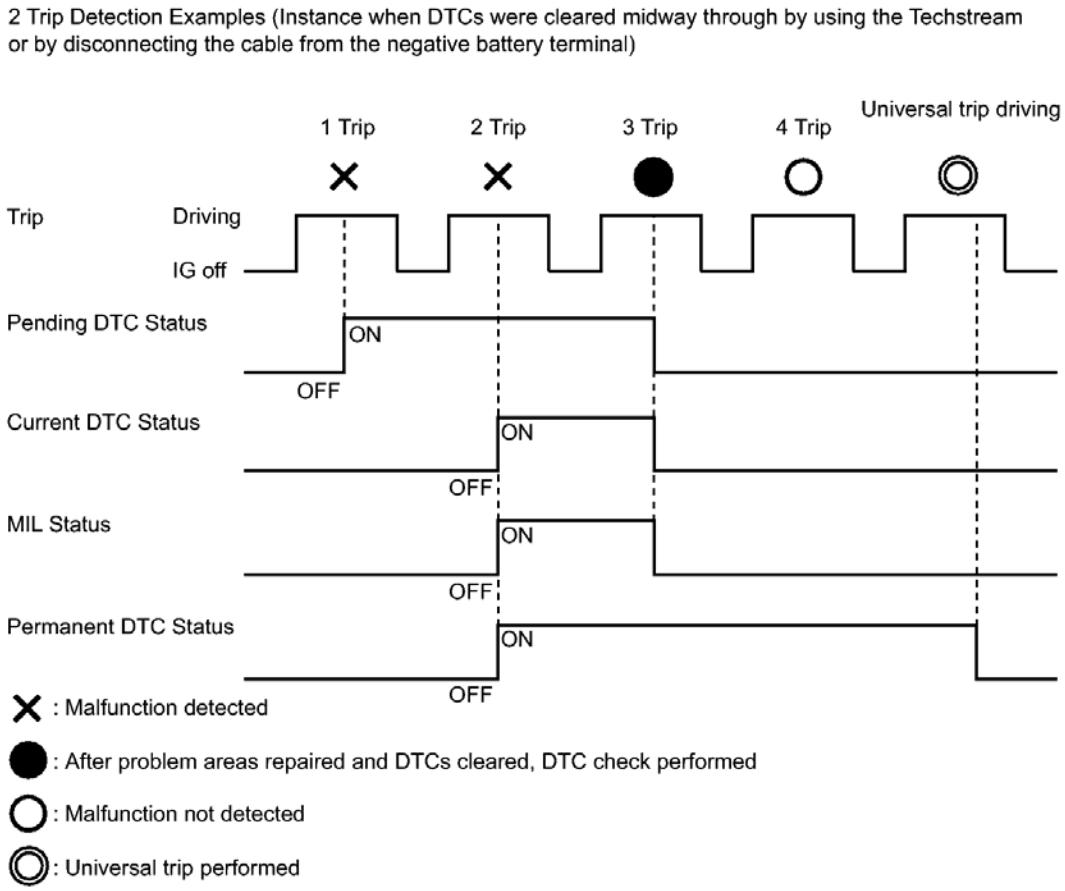

<u>Fig. 18: Trip Detection Examples Blinking Pattern (2 Of 2)</u>
Courtesy of TOYOTA MOTOR SALES, U.S.A., INC.

1. **CHECK DTC**
    a. Connect the Techstream to the DLC3.
    b. Turn the ignition switch to ON.
    c. Turn the Techstream on.
    d. Enter the following menus: Powertrain / ECT / Trouble Codes.
    e. Check the DTC(s) and freeze frame data, and then write them down.
    f. Check the details of the DTC(s). Refer to **<u>DIAGNOSTIC TROUBLE CODE CHART</u>**.
2. **CLEAR DTC (Pending and Current DTC)**
    a. Connect the Techstream to the DLC3.
    b. Turn the ignition switch to ON.
    c. Turn the Techstream on.
    d. Enter the following menus: Powertrain / ECT / Trouble Codes.
    e. Clear the DTCs.
3. **CLEAR PERMANENT DTC**

HINT:

Even if the following procedure is not performed, permanent DTCs are cleared if no malfunction are detected during 3 consecutive driving cycles.

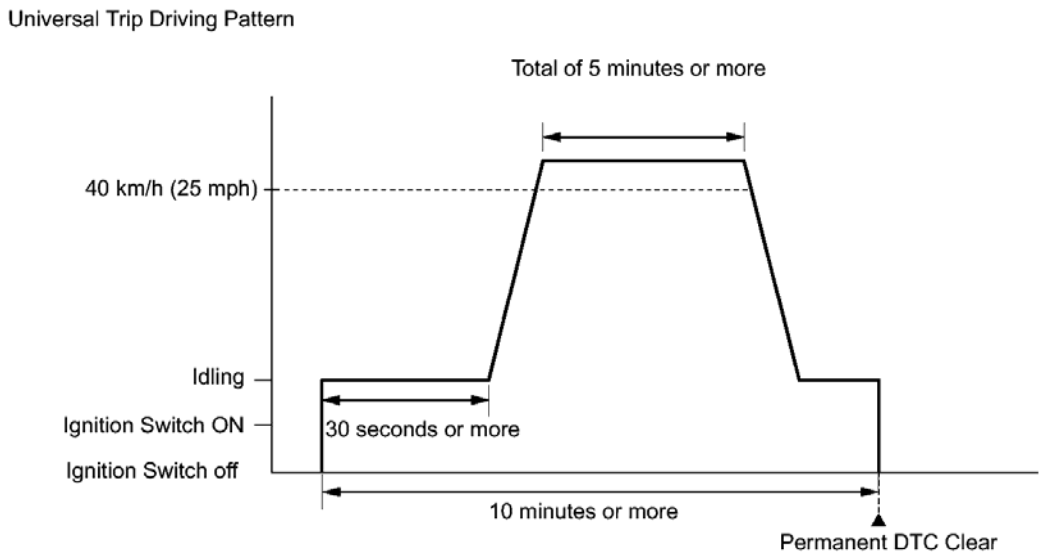

Fig. 19: Identifying Universal Trip Driving Pattern
Courtesy of TOYOTA MOTOR SALES, U.S.A., INC.

a. Connect the Techstream to the DLC3.
b. Turn the ignition switch to ON.
c. Turn the Techstream on.
d. Enter the following menus: Powertrain / Engine and ECT / Trouble Codes.
e. Check if permanent DTCs are stored.

   HINT:

   If permanent DTCs are not output, it is not necessary to continue this procedure.

f. Clear DTCs.
g. Perform the universal trip.
   1. Idle the engine for 30 seconds or more.
   2. Drive the vehicle at 40 km/h (25 mph) or more for a total of 5 minutes or more.

      HINT:

      - It is possible to complete the drive pattern even if the vehicle decelerates to less than 40 km/h (25 mph) during the driving cycle provided that the vehicle is driven at 40 km/h (25 mph) or more for a total of 5 minutes.

- When accelerating through the gears, make sure the vehicle is driven so all gears are used in order and no gears are skipped.

3. Allow 10 minutes or more to elapse from the time the engine is started.

h. Turn the ignition switch off.

i. Wait 15 seconds.

j. Turn the ignition switch to ON.

k. Enter the following menus: Powertrain / ECT / Trouble Codes.

l. Check that the permanent DTCs have been cleared.

HINT:

- If the permanent DTCs have not been cleared, perform the universal trip again.
- The permanent DTCs are cleared when the universal trip is completed.

CHECK MODE PROCEDURE

CHECK MODE PROCEDURE

1. **DESCRIPTION**
   a. Check mode has a higher sensitivity to malfunctions and can detect malfunctions that normal mode cannot detect. Check mode can also detect all the malfunctions that normal mode can detect. In check mode, DTCs are detected with 1 trip detection logic.
2. **CHECK MODE PROCEDURE**
   a. Make sure that the following conditions are met:
      1. Battery positive voltage 11 V or more.
      2. Throttle valve fully closed.
      3. Shift lever in P or N.
      4. A/C off.

   b. Turn the ignition switch off.

   c. Connect the Techstream to the DLC3.

   d. Turn the ignition switch to ON.

   e. Turn the Techstream on.

   f. Enter the following menus: Powertrain / ECT / Check Mode.

   g. Change the TCM to check mode. Make sure the MIL flashes as shown in the illustration.

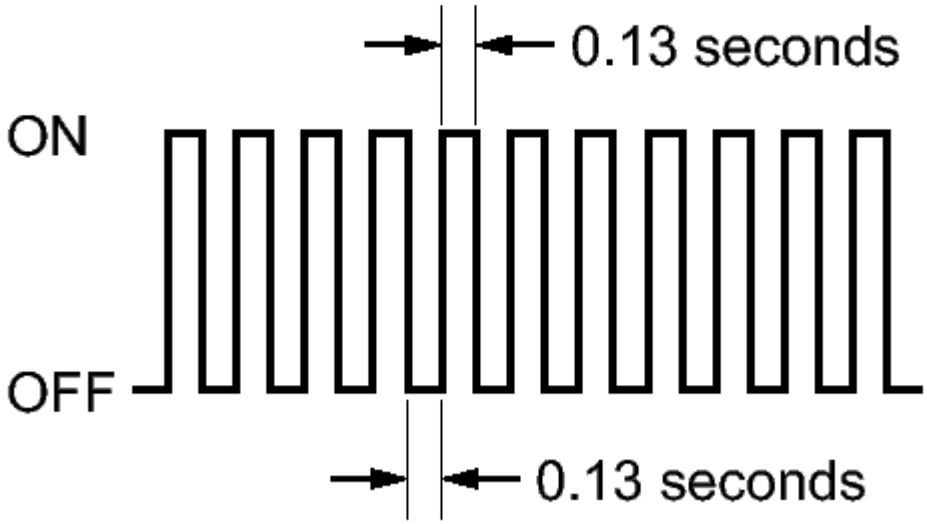

P

Fig. 20: Identifying Blinking Pattern
Courtesy of TOYOTA MOTOR SALES, U.S.A., INC.

NOTE: **All DTCs and freeze frame data will be cleared if: 1) the Techstream is used to change the TCM from normal mode to check mode or vice versa; or 2) during check mode, the ignition switch is turned from ON to ACC or off.**

Before entering check mode, make notes of the DTCs and freeze frame data.

h. Start the engine. The MIL should turn off after the engine starts.
i. Perform Monitor Drive Pattern for the ECT test. Refer to **MONITOR DRIVE PATTERN**.

(Or, simulate the conditions of the malfunction described by the customer.)

j. After simulating the malfunction conditions, use the Techstream to check the DTC and freeze frame data.

FAIL-SAFE CHART

FAIL-SAFE CHART

1. **Fail-safe**

This function minimizes the loss of operation when any abnormality occurs in a sensor or solenoid.

FAIL-SAFE CONTROL LIST

Malfunction Part	Function
Input Speed Sensor (NT)	Shifting to only either 1st or 3rd gears is allowed.
Output Speed Sensor (NC)	• The counter gear speed is determined based on the signals from the skid control ECU (speed sensor signals). • Shifting between 1st to 4th gears is allowed.
ATF Temperature Sensor	Shifting between 1st to 4th gears is allowed.
ECT ECU Power Supply (Voltage is Low)	When the vehicle is being driven in 6th gear, the transaxle is fixed in 6th gear. When being driven in any of 1st to 5th gears, the transaxle is fixed in 5th gear.
CAN communication	Shifting to only either 1st or 3rd gears is allowed.
Knock Sensor	Shifting between 1st to 4th gears is allowed.
	The current to the failed

Solenoid Valve SL1, SL2, SL3 and SL4	solenoid valve is cut off and operating the other solenoid valves with normal operation performs shift control. (Shift controls in fail-safe mode are described in the table below. For details, refer to Fail-Safe Control Chart)

SOLENOID VALVE OPERATION WHEN NORMAL

Gear		1st	2nd	3rd	4th	5th	6th
Solenoid	SL1	ON	ON	ON	ON	OFF	OFF
	SL2	OFF	OFF	OFF	ON	ON	ON
	SL3	OFF	ON	OFF	OFF	OFF	ON
	SL4	OFF	OFF	ON	OFF	ON	OFF

FAIL-SAFE CONTROL CHART

	Gear in Normal Conditions	1st	2nd	3rd	4th	5th	6th
SL1	ON Malfunction (without Fail-safe Control)*1	1st	2nd	3rd	4th	4th	4th
	OFF Malfunction (without Fail-safe Control)	1st to N	2nd to N	3rd to N	4th to N	5th	6th
	Fail-safe Control during OFF Malfunction	Fixed in 3rd or 5th					
	ON Malfunction (without Fail-safe Control)*1	1st to 4th	2nd to 4th	3rd to 4th	4th	5th	6th

SL2	OFF Malfunction (without Fail-safe Control)	1st	2nd	3rd	4th to 1st	5th to N	6th to N
	Fail-safe Control during OFF Malfunction	Fixed in 2nd or 3rd					
SL3	ON Malfunction (without Fail-safe Control)*1	1st to 2nd	2nd	3rd	4th	5th	6th
	OFF Malfunction (without Fail-safe Control)	1st	2nd to 1st	3rd	4th	5th	6th to N
	Fail-safe Control during OFF Malfunction	Fixed in 3rd					
SL4	ON Malfunction (without Fail-safe Control)*1	3rd	3rd	3rd	4th	5th	5th
	OFF Malfunction (without Fail-safe Control)	1st	2nd	3rd to 1st	4th	5th to N	6th
	Fail-safe Control during OFF Malfunction	Fixed in 2nd					

*1: Fail-safe control is not activated when an ON malfunction occurs.

DATA LIST / ACTIVE TEST

DATA LIST / ACTIVE TEST

1. **DATA LIST**

   HINT:

Using the Techstream to read the Data List allows the values or states of switches, sensors, actuators and other items to be read without removing any parts. This non-intrusive inspection can be very useful because intermittent conditions or signals may be discovered before parts or wiring is disturbed. Reading the Data List information early in troubleshooting is one way to save diagnostic time.

NOTE: **In the table below, the values listed under "Normal Condition" are reference values. Do not depend solely on these reference values when deciding whether a part is faulty or not.**

a. Warm up the engine.
b. Turn the ignition switch off.
c. Connect the Techstream to the DLC3.
d. Turn the ignition switch to ON.
e. Turn the Techstream on.
f. Enter the following menus: Powertrain / ECT / Data List / All Data.
g. According to the display on the Techstream, read the Data List.

ECT

Tester Display	Measurement Item/Range	Normal Condition	Diagnostic Note
Vehicle Speed	Vehicle speed / Min.: 0 km/h (0 mph), Max.: 255 km/h (158 mph)	Actual vehicle speed	-
Engine Speed	Engine speed / Min.: 0 RPM, Max.: 16383.75 RPM	550 to 800 RPM: Idling	-
Calculate Load	Calculated load by ECM / Min.: 0%, Max.: 100%	• 15.0 to 35.0%: Idling • 10.0 to 30.0%: Running without load (2000 RPM)	-
Coolant Temp	Engine coolant temperature / Min.: -40°C (-40°F), Max.:	80 to 105°C (176 to 221°F): After warming up	• If value -40°C (-40°F): sensor circuit open • If value 140°C

	140°C (284°F)		(284° F): sensor circuit shorted
Engine Run Time	Engine run time / Min.: 0 s (seconds), Max.: 65535 s (seconds)	Time after engine start	-
Battery Voltage	Battery voltage / Min.: 0, Max.: 65.535 V	11 to 14 V: Idling	-
Throttle Sensor Volt %	Throttle position sensor output / Min.: 0%, Max.: 100%	10 to 22%: Idling	Calculated value based on VTA1
Starter Signal	Starter signal / Open or Close	-	-
Neutral Position SW Signal	Park/neutral position switch status / ON or OFF	• ON: Shift lever is in P or N • OFF: Shift lever is not in P or N	When the shift lever position displayed on the Techstream differs from the actual position, adjustment of the park/neutral position switch or the shift cable may be incorrect. **HINT:** When the failure still occurs even after adjusting these parts. Refer to **DTC P0705:**

			Transmission Range Sensor Circuit Malfunction (PRNDL Input) .
Stop Light Switch	Stop light switch status / ON or OFF	Brake pedal is • ON: Depressed • OFF: Released	-
Check Mode	Check mode / ON or OFF	ON: Check mode ON	-
SPD Test Result	Check mode result for vehicle speed sensor / Compl or Incmpl	-	-
Complete Parts Monitor	Comprehensive component monitor / Not Avl or Avail	-	-
Fuel System Monitor	Fuel system monitor / Not Avl or Avail	-	-
Misfire Monitor	Misfire monitor / Not Avl or Avail	-	-
EGR/VVT Monitor	EGR/VVT Monitor / Not Avl or Avail	-	-
EGR/VVT Monitor	EGR/VVT Monitor / Compl or Incmpl	-	-
O2S(A/FS) Heater	Heated oxygen sensor (air fuel ratio sensor) heater	-	-

Monitor	monitor / Not Avl or Avail		
O2S(A/FS) Heater Monitor	Heated oxygen sensor (air fuel ratio sensor) heater monitor / Compl or Incmpl	-	-
O2S(A/FS) Monitor	Heated oxygen sensor (air fuel ratio sensor) monitor / Not Avl or Avail	-	-
O2S(A/FS) Monitor	Heated oxygen sensor (air fuel ratio sensor) monitor / Compl or Incmpl	-	-
A/C Monitor	A/C monitor / Not Avl or Avail	-	-
A/C Monitor	A/C monitor / Compl or Incmpl	-	-
2nd Air Monitor	2nd Air monitor / Not Avl or Avail	-	-
2nd Air Monitor	2nd Air monitor / Compl or Incmpl	-	-
EVAP Monitor	EVAP monitor / Not Avl or Avail	-	-
EVAP Monitor	EVAP monitor / Compl or Incmpl	-	-
Heated	Heated Catalyst		

Catalyst Monitor	monitor / Not Avl or Avail	-	-
Heated Catalyst Monitor	Heated Catalyst monitor / Compl or Incmpl	-	-
Catalyst Monitor	Catalyst monitor / Not Avl or Avail	-	-
Catalyst Monitor	Catalyst monitor / Compl or Incmpl	-	-
Component Monitor ENA	Comprehensive component monitor / Unable or Enable	-	-
Component Monitor CMPL	Comprehensive component monitor / Compl or Incmpl	-	-
Fuel System Monitor ENA	Fuel system monitor / Unable or Enable	-	-
Fuel System Monitor CMPL	Fuel system monitor / Compl or Incmpl	-	-
Misfire Monitor ENA	Misfire monitor / Unable or Enable	-	-
Misfire Monitor CMPL	Misfire monitor / Compl or Incmpl	-	-
EGR/VVT Monitor ENA	EGR/VVT monitor / Unable or Enable	-	-

EGR/VVT Monitor CMPL	EGR/VVT monitor / Compl or Incmpl	-	-
Heater Monitor ENA	Heated oxygen sensor (air fuel ratio sensor) heater monitor / Unable or Enable	-	-
Heater Monitor CMPL	Heated oxygen sensor (air fuel ratio sensor) heater monitor / Compl or Incmpl	-	-
O2S(A/FS) Monitor ENA	Heated oxygen sensor (air fuel ratio sensor) monitor / Unable or Enable	-	-
O2S(A/FS) Monitor CMPL	Heated oxygen sensor (air fuel ratio sensor) monitor / Compl or Incmpl	-	-
A/C Monitor ENA	A/C monitor / Unable or Enable	-	-
A/C Monitor CMPL	A/C monitor / Compl or Incmpl	-	-
2nd Air Monitor ENA	2nd air monitor / Unable or Enable	-	-
2nd Air Monitor CMPL	2nd air monitor / Compl or Incmpl	-	-
EVAP Monitor	EVAP monitor /	-	-

ENA	Unable or Enable		
EVAP Monitor CMPL	EVAP monitor / Compl or Incmpl	-	-
Heated Cat Monitor ENA	Heated catalyst monitor / Unable or Enable	-	-
Heated Cat Monitor CMPL	Heated catalyst monitor / Compl or Incmpl	-	-
Catalyst Monitor ENA	Catalyst monitor / Unable or Enable	-	-
Catalyst Monitor CMPL	Catalyst monitor / Compl or Incmpl	-	-
TC Terminal	TC terminal Status / ON or OFF	-	-
#Codes (Include History)	# of Codes / Min.: 0, Max.: 255	-	Number of detected DTCs
MIL	MIL status / ON or OFF	ON: MIL ON	-
MIL ON Run Distance	MIL ON run distance / Min.: 0 km (0 mile), Max.: 65535 km (40723 mile)	Distance after DTC detected	-
Running Time from MIL ON	Running time from MIL ON / Min.: 0 min (minute), Max.: 65535 min (minutes)	Equivalent to running time after MIL ON	-
Time after	Time after DTC cleared / Min.: 0 min	Equivalent to time	-

DTC Cleared	(minute), Max.: 65535 min (minutes)	after DTCs cleared	
Distance from DTC Cleared	Distance after DTC cleared / Min.: 0 km (0 mile) Max.: 65535 km (40723 mile)	Equivalent to time after DTCs cleared	-
Warmup Cycle Cleared DTC	Warm-up cycle after DTC cleared / Min.: 0, Max.: 255	-	Number of warm-up cycles after DTCs cleared
OBD Requirements	OBD requirements /	-	-
Number of Emission DTC	Emission related DTCs / Min.: 0, Max.: 127	-	-
TC and TE1	TC and TE1 terminals of DLC3 / ON or OFF	-	Active Test support data
Model Code	Model code /	-	-
Transmission (Engine) Type	Transmission type /	-	-
Cylinder Number	Cylinder number	-	-
Transmission Type	Transmission type /	-	-
Destination	Destination /	-	-
Model Year	Model year / Min.: 1900, Max.: 2155	-	-
System Identification	System identification /	-	-
Engine Speed from EFI	Engine speed / Min.: 0 RPM, Max.: 16383.75 RPM	550 to 800 RPM: Idling	-
			• If value -40°C(-

Intake-Air Temp from EFI	Intake air temperature / Min.: -40°C (-40°F), Max.: 215°C (419°F)	Equivalent to ambient air temperature	40°F): sensor circuit open • If value 215°C (419°F): sensor circuit shorted
Coolant Temp from EFI	Engine coolant temperature / Min.: -40°C (-40°F), Max.: 215°C (419°F)	80 to 105°C (176 to 221°F): After warming up	• If value -40°C (-40°F): sensor circuit open • If value 140°C (284°F): sensor circuit shorted
Throttle Position from EFI	Throttle sensor position / Min.: 0%, Max.: 100%	• 0%: Accelerator pedal released • 50 to 80%: Accelerator pedal fully depressed	Recognition value for throttle opening angle on ECM
Accel Position from EFI	Absolute Accelerator Pedal Position / Min.: 0%, Max.: 100%	• 0%: Accelerator pedal released • 54 to 86%: Accelerator pedal fully depressed	-
		Lock-up is • ON (After warming up the engine): Input turbine	

SPD (NT)	Input turbine speed/ Min.: 0 RPM, Max.: 12750 RPM	speed (NT) is equal to engine speed • OFF (idling with shift lever in N): Input turbine speed (NT) is nearly equal to engine speed	-
SPD (NC)	Counter gear speed / Min.: 0 RPM, Max.: 12750 RPM	-	-
Shift SW Status (P Range)	Park/neutral position switch status/ ON or OFF	• ON: Shift lever is in P • OFF: Shift lever is not in P	When the shift lever position displayed on the Techstream differs from the actual position, adjustment of the park/neutral position switch or the shift cable may be incorrect. **HINT:** When the failure still occurs even after adjusting these parts. Refer to **DTC P0705: Transmission Range Sensor Circuit**

			Malfunction (PRNDL Input)
Shift SW Status (R Range)	Park/neutral position switch status/ ON or OFF	• ON: Shift lever is in R • OFF: Shift lever is not in R	When the shift lever position displayed on the Techstream differs from the actual position, adjustment of the park/neutral position switch or the shift cable may be incorrect. **HINT:** When the failure still occurs even after adjusting these parts. Refer to **DTC P0705: Transmission Range Sensor Circuit Malfunction (PRNDL Input)**
			When the shift lever position displayed on the Techstream differs from the actual position, adjustment of the park/neutral position

Shift SW Status (N Range)	Park/neutral position switch status/ ON or OFF	• ON: Shift lever is in N • OFF: Shift lever is not in N	switch or the shift cable may be incorrect. **HINT:** When the failure still occurs even after adjusting these parts. Refer to **DTC P0705: Transmission Range Sensor Circuit Malfunction (PRNDL Input)**
Sports Shift Up SW	Sport shift up switch status/ ON or OFF	• ON: Continuously shift to "+" (up-shift) • OFF: Release "+" (up-shift)	-
Sports Shift Down SW	Sport shift down switch status/ ON or OFF	• ON: Continuously shift to "-" (down-shift) • OFF: Release "-" (down-shift)	-
Sports Mode Selection SW	Sport mode select switch status/ ON or OFF	Shift lever is: • ON: S, "+" or "-" • OFF: Not in S, "+" or "-"	-
			When the shift lever position displayed on the Techstream differs from the actual

Shift SW Status (D Range)	Park/neutral position switch status/ ON or OFF	• ON: Shift lever is in D or S • OFF: Shift lever is not in D or S	position, adjustment of the park/neutral position switch or the shift cable may be incorrect. **HINT:** When the failure still occurs even after adjusting these parts. Refer to **DTC P0705: Transmission Range Sensor Circuit Malfunction (PRNDL Input)**
A/T Oil Temperature 1	ATF temperature sensor value/ min.: -40°C (-40°F) max.: 215°C (419°F)	• After stall test; approximately 80°C (176°F) • Equal to ambient temperature when cold soak	If the value is "-40°C (-40°F)" or "215°C (419°F)", ATF temperature sensor circuit is open or shorted.
NT Sensor Voltage	Input speed sensor (NT) output voltage / Min.: 0 V, Max.: 5 V	0.1 to 1.9 V	-
NC Sensor Voltage	Output speed sensor (NC) output voltage / Min.: 0 V, Max.: 5 V	0.1 to 1.9 V	-
		• ON: Shift solenoid	

TPS 3 Switch	No. 3 ATF pressure switch status/ 0: OFF / 1: ON	valve SLU is ON • OFF: Shift solenoid valve SLU is OFF	-
Lock Up	Lock up / 0: OFF / 1: ON	Lock up: ON	-
Shift Status	TCM gear shift command/ 1st, 2nd, 3rd, 4th, 5th or 6th	Same as actual gear	-
SLT Solenoid Status	Shift solenoid SLT status/ ON or OFF	• Accelerator pedal is depressed: OFF • Accelerator pedal is released: ON	-
SLU Solenoid Status	Shift Solenoid SLU Status/ ON or OFF	• ON: Lock up • OFF: Except lock up	-
SL Solenoid Status	Shift Solenoid SL Status/ ON or OFF	• ON: Lock up • OFF: Except lock up	-
AT Fluid	Flex lockup judder judgment flag / 0: OFF / 1: ON	-	-

2. **ACTIVE TEST**

HINT:

Using the Techstream to perform Active Tests allows relays, VSVs, actuators and other items to be operated without removing any parts. This non-intrusive functional inspection can be very useful because intermittent operation may be discovered before parts or wiring is disturbed. Performing Active Tests early in troubleshooting is one way to save diagnostic time. Data List information can be displayed while performing Active Tests.

a. Warm up the engine.
b. Turn the ignition switch off.
c. Connect the Techstream to the DLC3.
d. Turn the ignition switch to ON.

e. Turn the Techstream on.
f. Enter the following menus: Powertrain / ECT / Active Test.
g. According to the display on the Techstream, perform the Active Test.

ECT

Tester Display	Test Part	Control Range	Diagnostic Note
Connect the TC and TE1	Connects and disconnects TC and TE1. (transitions into the fluid temperature detection mode)	ON/OFF	The MIL will not blink when "Connect the TC and TE1 / ON" is selected.
Activate the Solenoid (SLU)	Operates shift solenoid SLU	ON/OFF	[Vehicle Condition] • Engine stopped • Shift lever in P or N
Activate the Solenoid (SLT)*	Operates shift solenoid SLT to raise the line pressure.	ON/OFF **HINT:** ON: No action (normal operation) OFF: Line pressure up (When the Active Test of "Activate the Solenoid (SLT)" is performed, the TCM commands the SLT solenoid to turn off).	[Vehicle Condition] • Vehicle Stopped • IDL: ON
	Controls		Can be used to check SLU and SL solenoid

Activate the Lock Up	the shift solenoid SLU and SL to set the automatic transaxle to the lock-up condition.	ON/OFF	operation. [Vehicle Condition] Vehicle speed: 60 km/h (37 mph) or more
Activate the Solenoid (SL)	Operates shift solenoid SL	ON/OFF	[Vehicle Condition] • Engine stopped • Shift lever in P or N
Control the Shift Position	Operates the shift solenoid valves to allow gears to be selected manually.	• Press "-->" button: Upshift occurs • Press "<--" button: Downshift occurs	Can be used to check the operation of the shift solenoid valves. Upshifts and downshifts should be performed consecutively. A 10-second interval is required between gear changes. Do not downshift at high speeds. Doing so will damage the automatic transaxle. [Vehicle Condition] 50 km/h

			(30 mph) or less
Activate the Solenoid (SL1)	Operates shift solenoid SL1	ON/OFF	[Vehicle Condition] • Engine stopped • Shift lever in P or N
Activate the Solenoid (SL2)	Operates shift solenoid SL2	ON/OFF	[Vehicle Condition] • Engine stopped • Shift lever in P or N
Activate the Solenoid (SL3)	Operates shift solenoid SL3	ON/OFF	[Vehicle Condition] • Engine stopped • Shift lever in P or N
Activate the Solenoid (SL4)	Operates shift solenoid SL4	ON/OFF	[Vehicle Condition] • Engine stopped • Shift lever in P or N

*: The "Activate the solenoid (SLT)" Active Test is performed to allow confirmation that the line pressure changes. The line pressure changes are confirmed using the same SST that is used for the Hydraulic Test. Refer to **HYDRAULIC TEST**.

HINT:

Note that the pressure readings for the Active Test and Hydraulic Test are different.

DIAGNOSTIC TROUBLE CODE CHART

DIAGNOSTIC TROUBLE CODE CHART

HINT:

- If a DTC is displayed during the DTC check, check the parts listed in the table below and proceed to the appropriate information given.
- *1: "Comes on" means the Malfunction Indicator Lamp (MIL) illuminates.
- *2: "DTC stored" means the TCM memorizes the trouble code if the TCM detects the DTC detection condition.
- These DTCs may be output when clutches, brakes, gear components, etc., inside the automatic transaxle are damaged.

U660E AUTOMATIC TRANSAXLE SYSTEM

DTC Code	Detection Item	MIL*1	Memory*2	See
P0500	Vehicle Speed Sensor "A"	Comes on	DTC stored	Refer to **DTC P0500: Vehicle Speed Sensor "A"**
P0560	System Voltage	Comes on	DTC stored	Refer to **DTC P0560: System Voltage**
P0617	Starter Relay Circuit High	Comes on	DTC stored	Refer to **DTC P0617: Starter Relay Circuit High**
P062F	Internal Control Module EEPROM Error	Comes on	DTC stored	Refer to **DTC P062F: Internal Control Module EEPROM Error**
P0705	Transmission Range Sensor Circuit Malfunction (PRNDL Input)	Comes on	DTC stored	Refer to **DTC P0705: Transmission Range Sensor Circuit Malfunction (PRNDL Input)**
P0711	Transmission Fluid Temperature Sensor "A" Performance	Comes on	DTC stored	Refer to **DTC P0711: Transmission Fluid Temperature Sensor "A" Performance**
P0712	Transmission Fluid Temperature Sensor "A" Circuit Low Input	Comes on	DTC stored	Refer to **DTC P0712: Transmission Fluid Temperature Sensor "A" Circuit Low Input; DTC P0713: Transmission Fluid Temperature Sensor "A" Circuit High Input**
P0713	Transmission Fluid Temperature Sensor "A" Circuit High Input	Comes on	DTC stored	Refer to **DTC P0712: Transmission Fluid Temperature Sensor "A" Circuit Low Input; DTC P0713: Transmission Fluid Temperature Sensor "A" Circuit High Input**

P0715	Input / Turbine Speed Sensor Circuit Malfunction	Comes on	DTC stored	Refer to **DTC P0715: Input / Turbine Speed Sensor Circuit Malfunction; DTC P0717: Input Speed Sensor Circuit No Signal**
P0717	Input Speed Sensor Circuit No Signal	Comes on	DTC stored	Refer to **DTC P0715: Input / Turbine Speed Sensor Circuit Malfunction; DTC P0717: Input Speed Sensor Circuit No Signal**
P0724	Brake Switch "B" Circuit High	Comes on	DTC stored	Refer to **DTC P0724: Brake Switch "B" Circuit High**
P0741	Torque Converter Clutch Solenoid Performance (Shift Solenoid Valve SL)	Comes on	DTC stored	Refer to **DTC P0741: Torque Converter Clutch Solenoid Performance (Shift Solenoid Valve SL)**
P0746	Pressure Control Solenoid "A" Performance (Shift Solenoid Valve SL1)	Comes on	DTC stored	Refer to **DTC P0746: Pressure Control Solenoid "A" Performance (Shift Solenoid Valve SL1)**
P0748	Pressure Control Solenoid "A" Electrical (Shift Solenoid Valve SL1)	Comes on	DTC stored	Refer to **DTC P0748: Pressure Control Solenoid "A" Electrical (Shift Solenoid Valve SL1)**
P0776	Pressure Control Solenoid "B" Performance (Shift Solenoid Valve SL2)	Comes on	DTC stored	Refer to **DTC P0776: Pressure Control Solenoid "B" Performance (Shift Solenoid Valve SL2)**
P0778	Pressure Control Solenoid "B" Electrical (Shift Solenoid Valve SL2)	Comes on	DTC stored	Refer to **DTC P0778: Pressure Control Solenoid "B" Electrical (Shift Solenoid Valve SL2)**
P0791	Intermediate Shaft Speed Sensor "A" Circuit	Comes on	DTC stored	Refer to **DTC P0791: Intermediate Shaft Speed Sensor "A" Circuit; DTC P0793: Intermediate Shaft Speed Sensor "A"**
	Intermediate	Comes	DTC	Refer to **DTC P0791: Intermediate Shaft Speed Sensor**

P0793	Shaft Speed Sensor "A"	on	stored	**"A" Circuit; DTC P0793: Intermediate Shaft Speed Sensor "A"**
P0796	Pressure Control Solenoid "C" Performance (Shift Solenoid Valve SL3)	Comes on	DTC stored	Refer to **DTC P0796: Pressure Control Solenoid "C" Performance (Shift Solenoid Valve SL3)**
P0798	Pressure Control Solenoid "C" Electrical (Shift Solenoid Valve SL3)	Comes on	DTC stored	Refer to **DTC P0798: Pressure Control Solenoid "C" Electrical (Shift Solenoid Valve SL3)**
P0989	Transmission Fluid Pressure Sensor / Switch "E" Circuit Low	Comes on	DTC stored	Refer to **DTC P0989: Transmission Fluid Pressure Sensor / Switch "E" Circuit Low; DTC P0990: Transmission Fluid Pressure Sensor / Switch "E" Circuit High**
P0990	Transmission Fluid Pressure Sensor / Switch "E" Circuit High	Comes on	DTC stored	Refer to **DTC P0989: Transmission Fluid Pressure Sensor / Switch "E" Circuit Low; DTC P0990: Transmission Fluid Pressure Sensor / Switch "E" Circuit High**
P2714	Pressure Control Solenoid "D" Performance (Shift Solenoid Valve SLT)	Comes on	DTC stored	Refer to **DTC P2714: Pressure Control Solenoid "D" Performance (Shift Solenoid Valve SLT)**
P2716	Pressure Control Solenoid "D" Electrical (Shift Solenoid Valve SLT)	Comes on	DTC stored	Refer to **DTC P2716: Pressure Control Solenoid "D" Electrical (Shift Solenoid Valve SLT)**
P2757	Torque Converter Clutch Pressure Control Solenoid Performance (Shift Solenoid Valve SLU)	Comes on	DTC stored	Refer to **DTC P2757: Torque Converter Clutch Pressure Control Solenoid Performance (Shift Solenoid Valve SLU)**
	Torque Converter Clutch Pressure			

P2759	Control Solenoid Control Circuit Electrical (Shift Solenoid Valve SLU)	Comes on	DTC stored	Refer to **DTC P2759: Torque Converter Clutch Pressure Control Solenoid Control Circuit Electrical (Shift Solenoid Valve SLU)**
P2769	Short in Torque Converter Clutch Solenoid Circuit (Shift Solenoid Valve SL)	Comes on	DTC stored	Refer to **DTC P2769: Short in Torque Converter Clutch Solenoid Circuit (Shift Solenoid Valve SL); DTC P2770: Open in Torque Converter Clutch Solenoid Circuit (Shift Solenoid Valve SL)**
P2770	Open in Torque Converter Clutch Solenoid Circuit (Shift Solenoid Valve SL)	Comes on	DTC stored	Refer to **DTC P2769: Short in Torque Converter Clutch Solenoid Circuit (Shift Solenoid Valve SL); DTC P2770: Open in Torque Converter Clutch Solenoid Circuit (Shift Solenoid Valve SL)**
P2808	Pressure Control Solenoid "G" Performance (Shift Solenoid Valve SL4)	Comes on	DTC stored	Refer to **DTC P2808: Pressure Control Solenoid "G" Performance (Shift Solenoid Valve SL4)**
P2810	Pressure Control Solenoid "G" Electrical (Shift Solenoid Valve SL4)	Comes on	DTC stored	Refer to **DTC P2810: Pressure Control Solenoid "G" Electrical (Shift Solenoid Valve SL4)**
U0100	Lost Communication with ECM / PCM "A"	Comes on	DTC stored	Refer to **DTC U0100: Lost Communication with ECM / PCM "A"**

AUTOMATIC TRANSAXLE SYSTEM

DTC P0500: VEHICLE SPEED SENSOR "A"

DESCRIPTION

The speed sensors detect the wheel speed and send the appropriate signals to the skid control ECU. The skid control ECU converts these wheel speed signals into a 4-pulse signal and outputs it to the TCM via the combination meter. The TCM determines the vehicle speed based on the frequency of these pulse signals.

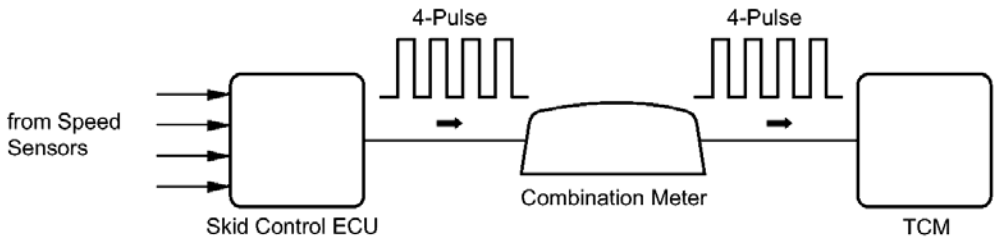

Fig. 1: Vehicle Speed Sensor Pulse Signal Diagram
Courtesy of TOYOTA MOTOR SALES, U.S.A., INC.

DTC No.	DTC Detection Condition	Trouble Area
P0500	When the engine coolant temperature sensor is normal and the counter gear speed is 300 RPM or more, the vehicle speed signal is not input for 2 seconds or more (1 trip detection logic).	• Open or short in vehicle speed signal circuit • Combination meter • Vehicle speed sensor (Brake control system) • Skid control ECU (Brake control system) • TCM

MONITOR DESCRIPTION

The TCM assumes that the vehicle is being driven when the transmission counter gear indicates more than 300 RPM and over 30 seconds have passed since the park/neutral position switch was turned off. If there is no vehicle speed signal with these conditions satisfied, the TCM concludes that there is a vehicle speed signal malfunction. The TCM will turn on the MIL and store the DTC.

MONITOR STRATEGY

Related DTCs	P0500: Vehicle Speed Sensor Circuit
Required sensors/components (Main)	Vehicle speed sensor, Combination meter, Skid control ECU
Required sensors/components (Sub)	Output speed sensor (NC), Engine coolant temperature (ECT) sensor
Frequency of operation	Continuous
Duration	2 seconds
MIL operation	Immediately
Sequence operation	None

TYPICAL ENABLING CONDITIONS

Engine	Running
Transmission counter gear revolution	300 RPM or more
Battery voltage	8 V or more
Ignition switch	ON
Starter	OFF
Either a or b is met (See below)	
a. All of the following conditions are met	
ECT	20°C (68°F) or more
ECT sensor fail (P0115, P0117, P0118, P0125)	Not detected
Time after park/neutral position switch ON to OFF	2 seconds or more
b. All of the following conditions are met	
ECT	Less than 20°C (68°F)
ECT sensor fail (P0115, P0117, P0118, P0125)	Detected
Time after park/neutral position switch ON to OFF	30 seconds or more

TYPICAL MALFUNCTION THRESHOLDS

Vehicle speed sensor signal	No pulse input

WIRING DIAGRAM

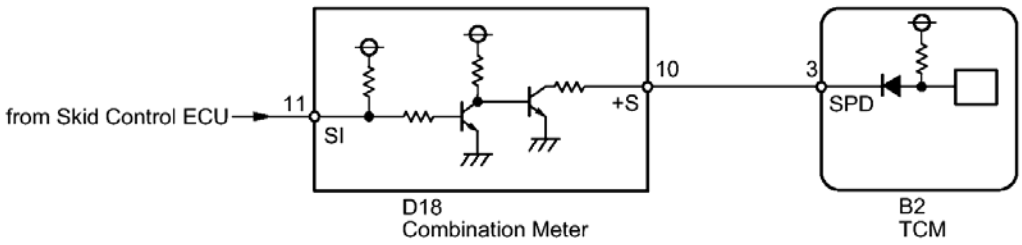

Fig. 2: Vehicle Speed Sensor Circuit - Wiring Diagram
Courtesy of TOYOTA MOTOR SALES, U.S.A., INC.

INSPECTION PROCEDURE

NOTE: **Perform the universal trip to clear permanent DTCs. Refer to DTC CHECK / CLEAR .**

PROCEDURE

1. **READ VALUE USING TECHSTREAM (VEHICLE SPEED)**
   a. Drive the vehicle and check whether the operation of the speedometer in the combination meter is normal.

      HINT:

      - The vehicle speed sensor is operating normally if the speedometer reading is normal.
      - If the speedometer does not operate, check it by following the procedure described for a speedometer malfunction.

   b. Connect the Techstream to the DLC3.
   c. Turn the ignition switch to ON.
   d. Turn the Techstream on.
   e. Enter the following menus: Powertrain / ECT / Data List / All Data / Vehicle Speed.
   f. Drive the vehicle.
   g. Read the value displayed on the Techstream.

      OK

      Vehicle speeds displayed on the Techstream and speedometer display are equal.

   NG --> See step 2

   OK --> See step 6

2. **INSPECT COMBINATION METER (SPD SIGNAL WAVEFORM)**
   a. Inspect the combination meter using an oscilloscope.

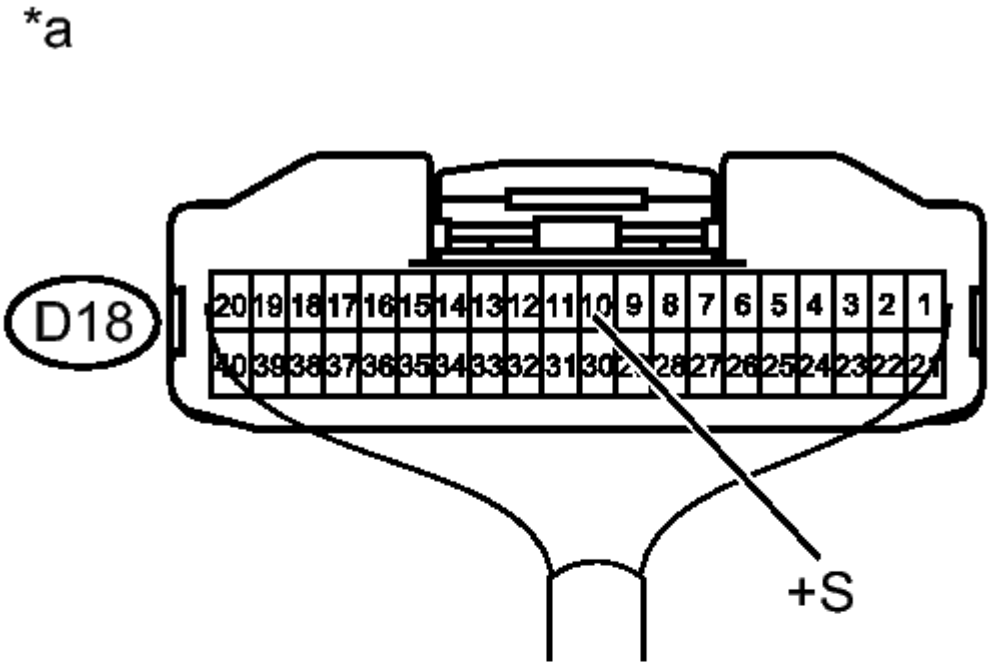

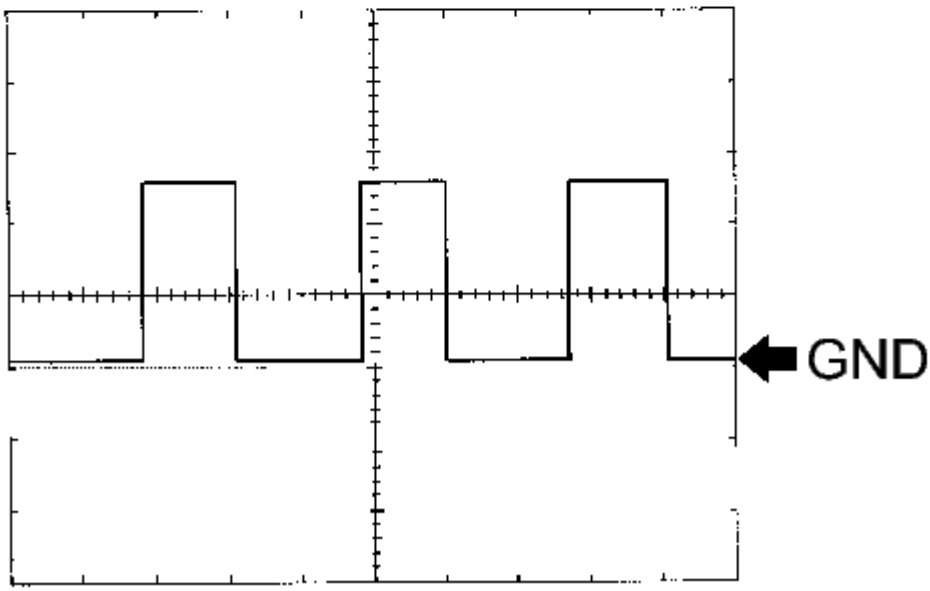

<u>Fig. 3: Measuring Voltage Of Combination Meter (Spd Signal Waveform)</u>
Courtesy of TOYOTA MOTOR SALES, U.S.A., INC.

1. Move the shift lever to N.
2. Jack up the vehicle.
3. Turn the ignition switch to ON.
4. Measure the voltage between the terminal of the combination meter assembly and the body ground while the wheel is turned slowly.

   Standard Voltage

Tester Connection	Switch Condition	Specified Condition
D18-10 (+S) - Body ground	Ignition switch ON	Voltage generated intermittently

TEXT IN ILLUSTRATION

*a	Component with harness connected: (Combination Meter)

HINT:

The output voltage should fluctuate up and down, similarly to the diagram, when the wheel is turned slowly.

NG --> See step 5

OK: Go to next step

3. **CHECK HARNESS AND CONNECTOR (COMBINATION METER - TCM)**
   a. Disconnect the combination meter connector.
   b. Disconnect the TCM connector.
   c. Measure the resistance according to the value(s) in the table below.

   Standard Resistance

Tester Connection	Condition	Specified Condition
D18-10 (+S) - B2-3 (SPD)	Always	Below 1 ohms

NG --> REPAIR OR REPLACE HARNESS OR CONNECTOR

OK --> See step 4

4. **REPLACE TCM. Refer to REMOVAL**
5. **GO TO METER / GAUGE SYSTEM (SPEED SIGNAL CIRCUIT). Refer to Speed Signal Circuit**
6. **SYMPTOM SIMULATION AND DTC CHECK. Refer to HOW TO PROCEED WITH TROUBLESHOOTING**

DTC P0560: SYSTEM VOLTAGE

DESCRIPTION

The battery supplies electricity to the TCM even when the ignition switch is off. This power allows the TCM to store data such as DTC history and freeze frame data. If the battery voltage falls below a minimum level, these memories are cleared and the TCM determines that there is a malfunction in the power supply circuit. When the engine is next started, the TCM will turn on the MIL and store the DTC.

DTC No.	DTC Detection Condition	Trouble Area
P0560	Open in TCM back-up power source circuit. DTC is detected for 3 seconds or more (1 trip detection logic).	• Open in back-up power source circuit • TCM

HINT:

If DTC P0560 is set, the TCM does not store other DTCs.

MONITOR STRATEGY

Related DTCs	P0560: TCM system voltage
Required Sensors/Components (Main)	TCM
Required Sensors/Components (Sub)	-
Frequency of Operation	Continuous
Duration	3 seconds
MIL Operation	Immediately (MIL illuminated after next engine start)
Sequence of Operation	None

TYPICAL ENABLING CONDITIONS

Monitor runs whenever following DTCs are not present:	None

TYPICAL MALFUNCTION THRESHOLDS

TCM power source	Less than 3.5 V
Stand-by RAM	Initialized

WIRING DIAGRAM

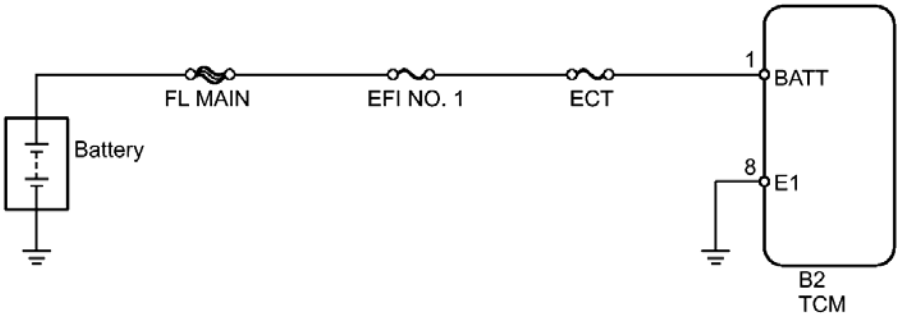

Fig. 4: System Voltage Circuit - Wiring Diagram
Courtesy of TOYOTA MOTOR SALES, U.S.A., INC.

INSPECTION PROCEDURE

NOTE:

- **Inspect the fuses for circuits related to this system before performing the following inspection procedure.**
- **Perform the universal trip to clear permanent DTCs. Refer to DTC CHECK / CLEAR .**

PROCEDURE

1. **CHECK HARNESS AND CONNECTOR (TCM - BATTERY AND BODY GROUND)**
   a. Disconnect the TCM connector.

*a

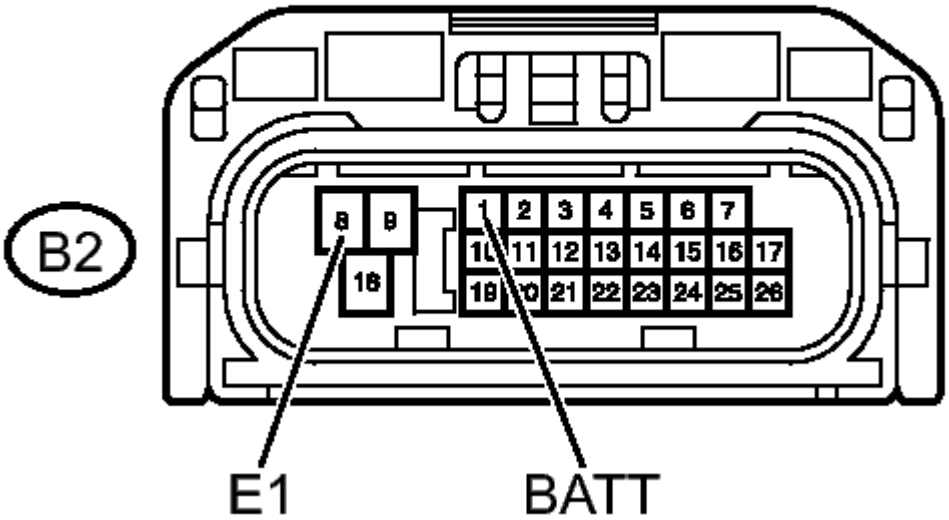

Fig. 5: Measuring Voltage Of TCM Battery To Body Ground
Courtesy of TOYOTA MOTOR SALES, U.S.A., INC.

b. Measure the voltage according to the value(s) in the table below.

Standard Voltage

Tester Connection	Condition	Specified Condition
B2-1 (BATT) - B2-8 (E1)	Always	11 to 14 V

c. Measure the resistance according to the value(s) in the table below.

Standard Resistance

Tester Connection	Condition	Specified Condition
B2-8 (E1) - Body ground	Always	Below 1 ohms

TEXT IN ILLUSTRATION

	Front view of

*a	wire harness connector: (to TCM)

NG --> REPAIR OR REPLACE HARNESS OR CONNECTOR

OK --> See step 2

2. **REPLACE TCM. Refer to REMOVAL**

DTC P0617: STARTER RELAY CIRCUIT HIGH

DESCRIPTION

While the engine is being cranked, battery voltage is applied to terminal STA of the TCM.

If the TCM detects the Starter Control (STA) signal while the vehicle is being driven, it determines that there is a malfunction in the STA circuit. The TCM will turn on the MIL and store the DTC.

This monitor runs when the vehicle is driven at 20 km/h (12.43 mph) for over 20 seconds.

DTC No.	DTC Detection Condition	Trouble Area
P0617	When conditions (a), (b) and (c) are met, positive (+B) battery voltage 10.5 V or more applied to TCM for 20 seconds (1 trip detection logic). (a) Vehicle speed more than 20 km/h (12.43 mph) (b) Engine speed more than 1000 RPM (c) STA signal ON	• Park/neutral position switch • Ignition switch • Starter relay circuit • TCM

MONITOR STRATEGY

Related DTCs	P0617: Starter signal
Required Sensors/Components (Main)	Starter (ST) relay, Park/neutral position switch, ignition switch
Required Sensors/Components (Sub)	Vehicle speed sensor (VSS), Crankshaft Position (CKP) sensor
Frequency of Operation	Continuous
Duration	20 seconds
MIL Operation	Immediately
Sequence of Operation	None

TYPICAL ENABLING CONDITIONS

Monitor runs whenever these DTCs are not present:	None
Battery voltage	10.5 V or more
Vehicle speed	20 km/h (12.43 mph) or more
Engine speed	1000 RPM or more

TYPICAL MALFUNCTION THRESHOLDS

Starter signal	ON

WIRING DIAGRAM

w/o Smart Key System:

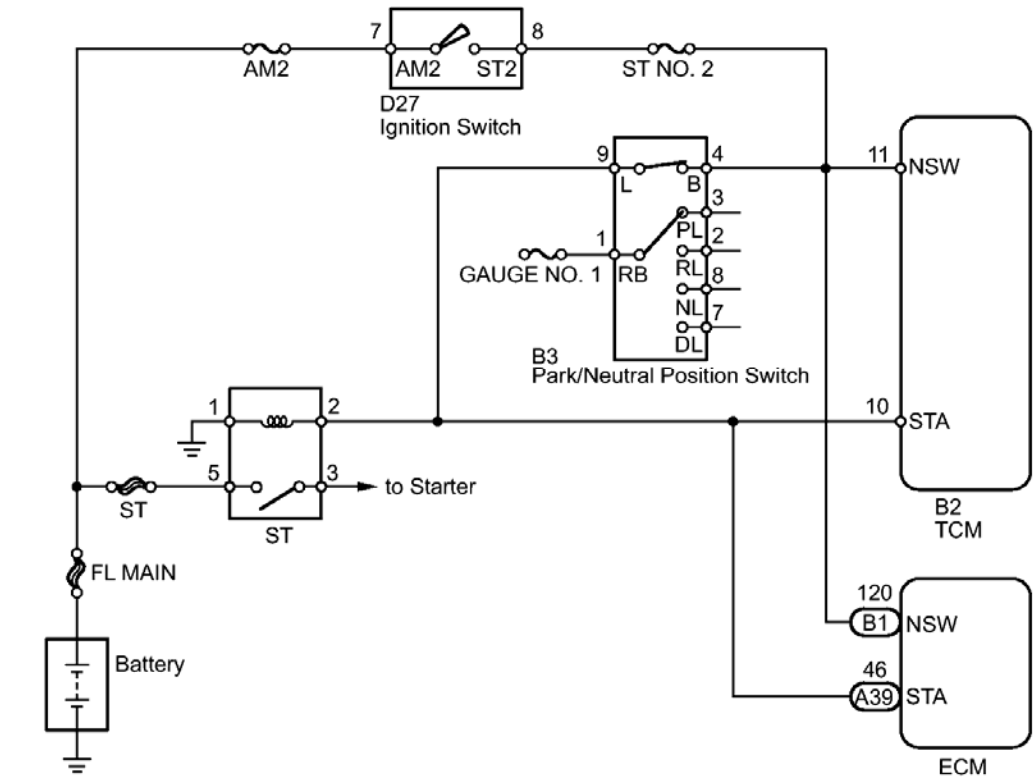

Fig. 6: Starter Relay Circuit - Wiring Diagram (w/o Smart Key System)
Courtesy of TOYOTA MOTOR SALES, U.S.A., INC.

w/ Smart Key System:

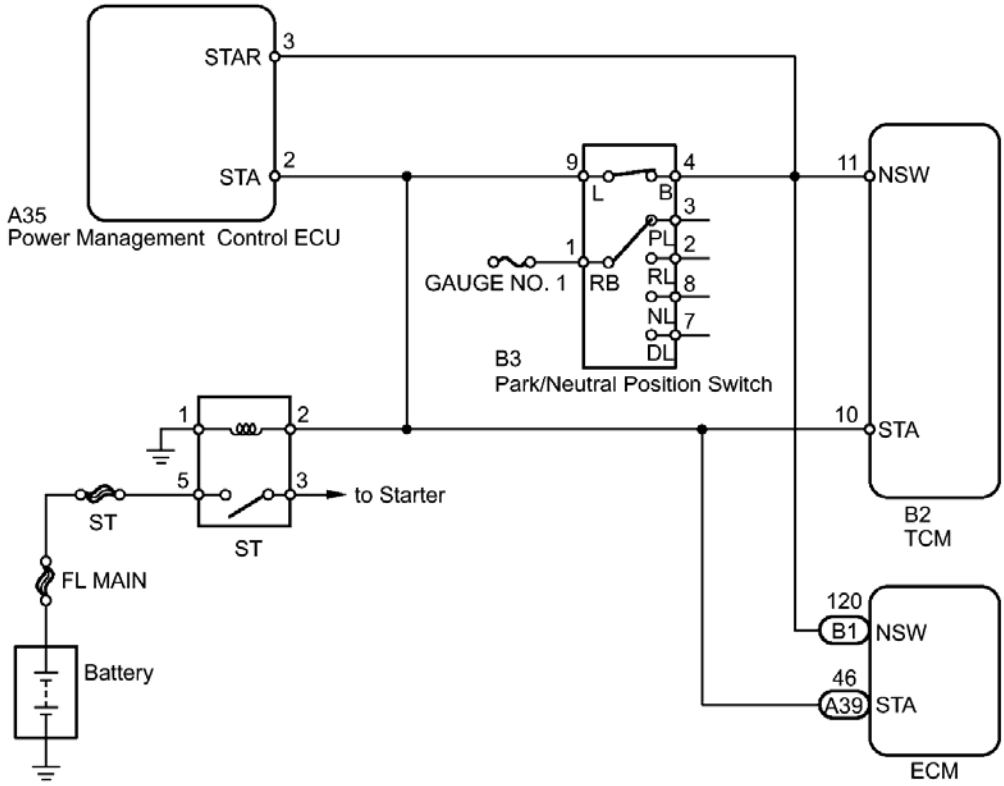

Fig. 7: Starter Relay Circuit - Wiring Diagram (w/ Smart Key System)
Courtesy of TOYOTA MOTOR SALES, U.S.A., INC.

INSPECTION PROCEDURE

NOTE: **Perform the universal trip to clear permanent DTCs. Refer to DTC CHECK / CLEAR .**

HINT:

The following troubleshooting flowchart is based on the premise that the engine is cranked normally. If the engine does not crank, proceed to the problem symptoms table. Refer to **2GR-FE - PROBLEM SYMPTOMS TABLE** or **1AR-FE - PROBLEM SYMPTOMS TABLE** .

PROCEDURE

1. **READ VALUE USING TECHSTREAM (STARTER SIGNAL)**
   a. Connect the Techstream to the DLC3.
   b. Turn the ignition switch to ON.
   c. Turn the Techstream on.
   d. Enter the following menus: Powertrain / ECT / Data List / All Data /Starter Signal.

e. Check the value displayed on the Techstream when the ignition switch is turned to ON and START.

OK

Switch Condition	Starter Signal
ON	Close
START	Open

NG --> See step 2

OK --> See step 11

2. **READ VALUE USING TECHSTREAM (STARTER SIGNAL)**
   a. Turn the Techstream off.
   b. Turn the ignition switch off.
   c. Disconnect the park/neutral position switch connector.
   d. Turn the ignition switch to ON.
   e. Turn the Techstream on.
   f. Enter the following menus: Powertrain / ECT / Data List / All Data / Starter Signal.
   g. Check the value displayed on the Techstream when the ignition switch is turned to ON.

RESULT

Starter Signal	Proceed to
Remains Open	A
Close	B

B --> See step 4

A: Go to next step

3. **INSPECT TCM (STA VOLTAGE)**
   a. Turn the ignition switch off.
   b. Disconnect the ECM connector.

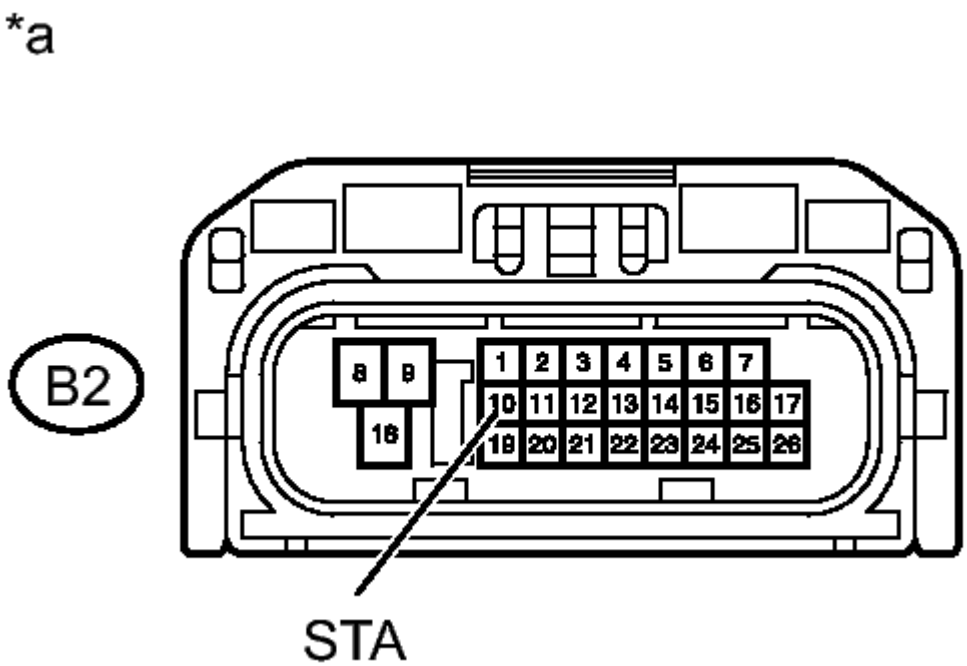

Fig. 8: Measuring Voltage Of TCM (STA Voltage)
Courtesy of TOYOTA MOTOR SALES, U.S.A., INC.

c. Disconnect the power management control ECU connector (w/ Smart Key System).
d. Connect the park/neutral position switch connector.
e. Disconnect the TCM connector.
f. Measure the voltage according to the value(s) in the table below.

RESULT

Tester Connection	Condition	Specified Condition	Proceed to
B2-10 (STA) - Body ground	Always	11 to 14 V	A
		Below 1.5 V	B

TEXT IN ILLUSTRATION

*a	Front view of wire harness connector (to TCM)

B --> See step 12

A --> REPAIR OR REPLACE HARNESS OR CONNECTOR (TCM - PARK/NEUTRAL POSITION SWITCH - ST RELAY AND OTHER ECUS)

4. **INSPECT PARK/NEUTRAL POSITION SWITCH**
   a. Disconnect the park/neutral position switch connector.
   b. Measure the resistance according to the value(s) in the table below.

*a

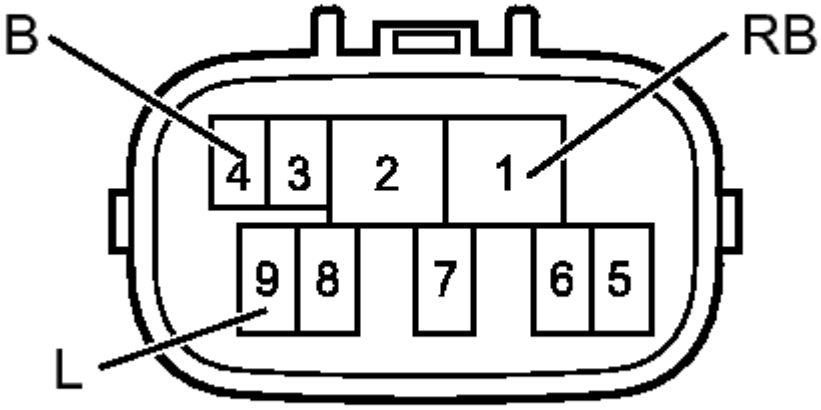

Fig. 9: Measuring Resistance Of Park/Neutral Position Switch
Courtesy of TOYOTA MOTOR SALES, U.S.A., INC.

Standard Resistance

Tester Connection	Switch Condition (Shift Lever Position)	Specified Condition
4 (B) - 9 (L)	P	Below 1 ohms
	N	Below 1 ohms
	Except P and N	10 kohms or higher
	P	10 kohms or higher
		10 kohms

1 (RB) - 9 (L)	R	or higher
	N	10 kohms or higher
	D	10 kohms or higher

TEXT IN ILLUSTRATION

*a	Component without harness connected (Park/Neutral Position Switch)

RESULT

Result	Proceed to
Short between 4 and 9 (w/o Smart Key System)	A
Short between 4 and 9 (w/ Smart Key System)	B
Short between 1 and 9	C

B --> See step 9

C --> See step 13

A: Go to next step

5. **REPLACE PARK/NEUTRAL POSITION SWITCH**
   a. Replace the park/neutral position switch. Refer to **REMOVAL** .

NEXT: Go to next step

6. **CHECK DTC OUTPUT**
   a. Start the engine.
   b. Turn the Techstream on.
   c. Enter the following menus: Powertrain / ECT / Trouble Codes.
   d. Perform the monitor drive pattern. Refer to **MONITOR DRIVE PATTERN**
   e. Check the DTC output on the Techstream.

RESULT

Result	Proceed to
DTC not output	A
P0617 is output	B

B --> See step 7

A --> END

7. **INSPECT IGNITION SWITCH**
   a. Remove the ignition switch.
   b. Measure the resistance according to the value(s) in the table below.

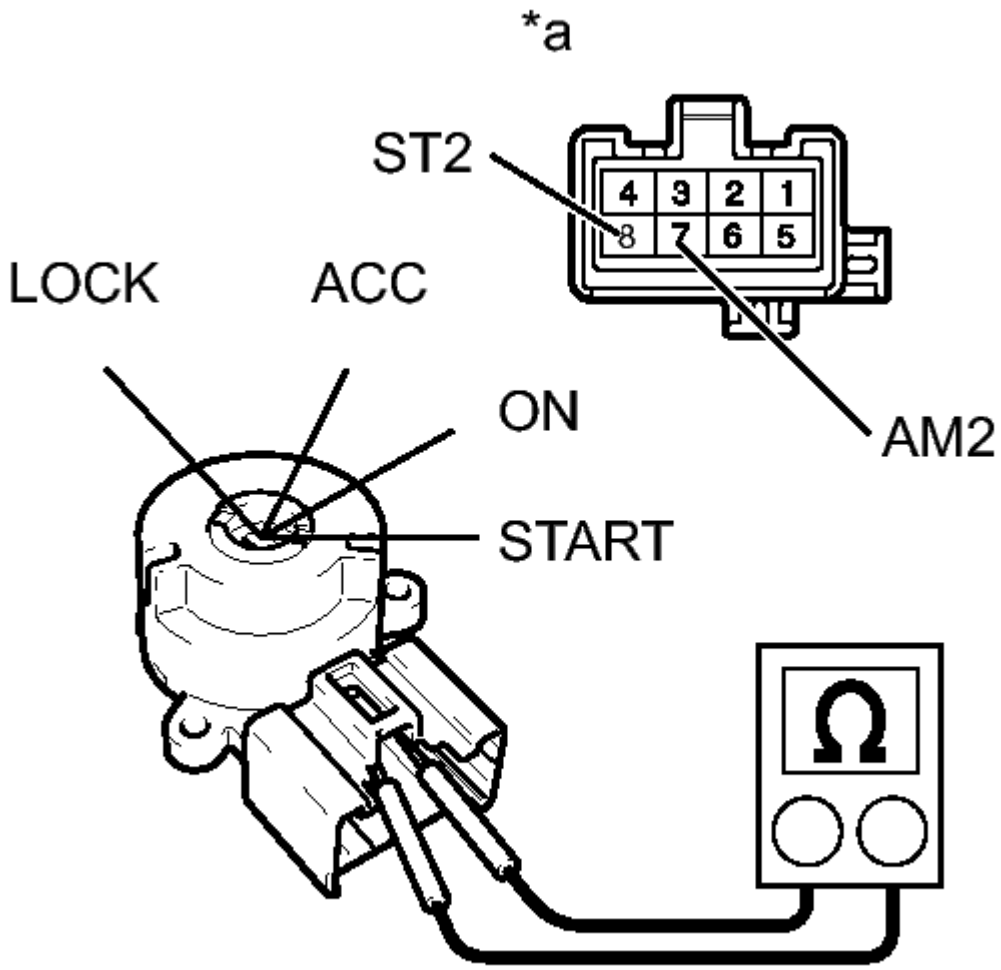

P

Fig. 10: Measuring Resistance Of Ignition Switch
Courtesy of TOYOTA MOTOR SALES, U.S.A., INC.

Standard Resistance

Tester Connection	Switch Condition	Specified Condition
8 (ST2) - Except 7 (AM2) terminal	LOCK, ACC AND ON	10 kohms or higher

TEXT IN ILLUSTRATION

	Component without harness

*a	connected (Ignition Switch)

NG --> See step 14

OK: Go to next step

8. **INSPECT TCM (NSW TERMINAL VOLTAGE)**
   a. Reinstall the ignition switch.
   b. Turn the ignition switch off.
   c. Disconnect the ECM connector.

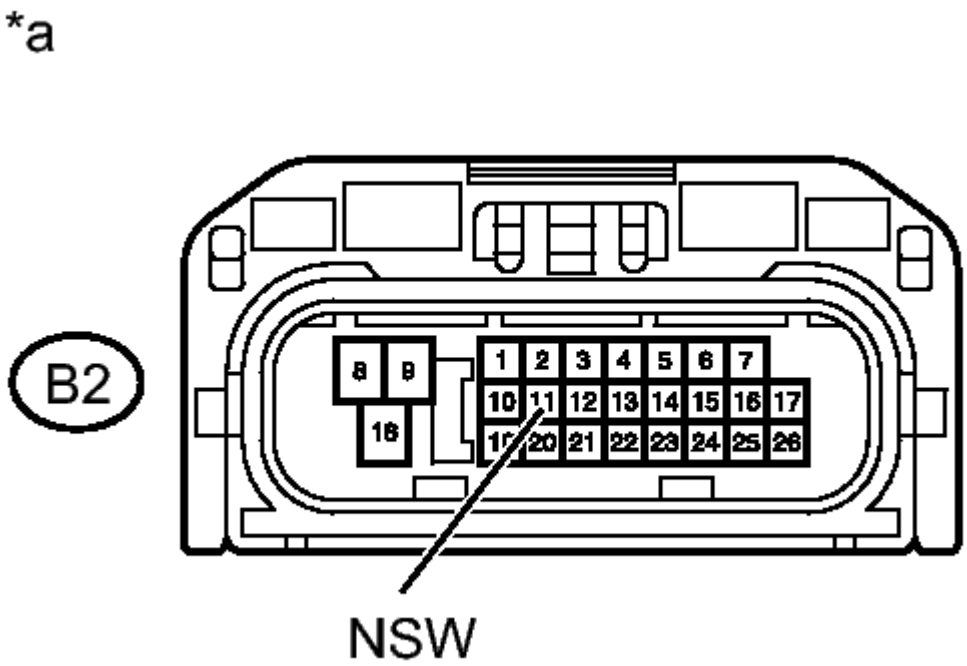

Fig. 11: Measuring Voltage Of TCM (NSW Terminal Voltage)
Courtesy of TOYOTA MOTOR SALES, U.S.A., INC.

   d. Connect the park/neutral position switch connector.
   e. Disconnect the TCM connector.
   f. Measure the voltage according to the value(s) in the table below.

   Standard Voltage

Tester Connection	Switch Condition	Specified Condition
B2-11		

(NSW) - Body ground	Ignition switch off	Below 1.5 V

TEXT IN ILLUSTRATION

*a	Front view of wire harness connector (to TCM)

NG --> See step 12

OK --> REPAIR OR REPLACE HARNESS OR CONNECTOR (TCM - IGNITION SWITCH - PARK/NEUTRAL POSITION SWITCH)

9. **REPLACE PARK/NEUTRAL POSITION SWITCH**
   a. Replace the park/neutral position switch. Refer to **REMOVAL** .

NEXT: Go to next step

10. **CHECK DTC OUTPUT**
   a. Start the engine.
   b. Turn the Techstream on.
   c. Perform the monitor drive pattern. Refer to **MONITOR DRIVE PATTERN** .
   d. Enter the following menus: Powertrain / ECT / Trouble Codes.
   e. Check the DTC output on the Techstream.

RESULT

Result	Proceed to
DTC not output	A
P0617 is output	B

B --> See step 15

A --> END

11. **CHECK FOR INTERMITTENT PROBLEMS. Refer to HOW TO PROCEED WITH TROUBLESHOOTING**

12. **REPLACE TCM. Refer to REMOVAL**
13. **REPLACE PARK/NEUTRAL POSITION SWITCH. Refer to REMOVAL**
14. **REPLACE IGNITION SWITCH. Refer to REMOVAL**
15. **CHECK STARTER SIGNAL CIRCUIT. Refer to Starter Signal Circuit**

DTC P062F: INTERNAL CONTROL MODULE EEPROM ERROR

DESCRIPTION

The TCM monitors its internal operation and it will set this DTC when it detects an internal malfunction.

DTC No.	DTC Detection Condition	Trouble Area
P062F	TCM internal error (EEPROM)	TCM

MONITOR DESCRIPTION

The TCM monitors its internal operation. If the internal operation is malfunctioning, the TCM will turn on the MIL and store the DTC.

MONITOR STRATEGY

Related DTCs	P062F: Internal control module EEPROM error
Required sensors/Components (Main)	TCM
Required sensors/Components (Related)	-
Frequency of operation	Once per driving cycle
Duration	11 seconds
MIL operation	Immediately
Sequence of operation	None

TYPICAL ENABLING CONDITIONS

Monitor runs whenever following DTCs not present	None
Time after engine start	10 seconds or more
Battery voltage	8 V or higher
Ignition switch	ON
Starter	OFF

TYPICAL MALFUNCTION THRESHOLDS

Permanent fault code data	Mismatch (3 times or more)

INSPECTION PROCEDURE

NOTE: **Perform the universal trip to clear permanent DTCs. Refer to DTC CHECK / CLEAR .**

PROCEDURE

1. **READ OUTPUT DTC (DTC P062F)**
   a. Connect the Techstream to the DLC3.
   b. Turn the ignition switch to ON.
   c. Turn the Techstream on.
   d. Clear DTCs. Refer to **DTC CHECK / CLEAR** .
   e. Turn the ignition switch off and turn the Techstream off.
   f. Disconnect the Techstream.
   g. Disconnect the cable from the negative (-) battery terminal and wait for 1 minute.
   h. Connect the cable to the negative (-) battery terminal.
   i. Connect the Techstream to the DLC3.
   j. Turn the ignition switch to ON.
   k. Turn the Techstream on.
   l. Enter the following menus: Powertrain / ECT / Trouble Codes.
   m. Read DTCs.

   RESULT

Result	Proceed to
No DTC output	A
P062F is output	B

   B --> See step 3

   A --> See step 2

2. **CHECK FOR INTERMITTENT PROBLEMS. Refer to ELECTRONIC CIRCUIT INSPECTION PROCEDURE**
3. **REPLACE TCM. Refer to REMOVAL**

DTC P0705: TRANSMISSION RANGE SENSOR CIRCUIT MALFUNCTION (PRNDL INPUT)

DESCRIPTION

The park/neutral position switch detects the shift lever position and sends signals to the TCM.

DTC No.	DTC Detection Condition	Trouble Area
P0705	(A) Any 2 or more signals of the following are ON simultaneously (2 trip detection logic) • NSW input signal is ON. • R input signal is ON. • D input signal is ON. (B) All switches are OFF simultaneously for NSW, R and D.	• Open or short in park/neutral position switch circuit • Park/neutral position switch • TCM

MONITOR DESCRIPTION

These DTCs indicate a problem with the park/neutral position switch and the wire harness in the park/neutral position switch circuit.

The park/neutral position switch detects the shift lever position and sends signals to the TCM.

For safety, the park/neutral position switch detects the shift lever position so that the engine can be started only when the shift lever is in P or N.

The park/neutral position switch sends a signal to the TCM according to the shift lever position (R or D). The TCM determines that there is a problem with the switch or related parts if it receives more than 1 position signal simultaneously. The TCM will turn on the MIL and store the DTC.

MONITOR STRATEGY

Related DTCs	P0705: Park/neutral position switch/Verify switch input
Required sensors/Components	Park/neutral position switch
Frequency of operation	Continuous
Duration	Condition (A): 2 seconds Condition (B): 60 seconds
MIL operation	2 driving cycles
Sequence of operation	None

TYPICAL ENABLING CONDITIONS

The monitor will run whenever the following DTCs are not present	None
Ignition switch	ON
Battery voltage	10.5 V or more

TYPICAL MALFUNCTION THRESHOLDS

When either condition below is met: Condition (A) or (B)

Condition (A)

When 2 or more of the following signals are input at the same time:

Park/neutral position switch	ON
R position switch	ON
D position switch	ON

Condition (B)

When all conditions below are met:

Park/neutral position switch	OFF
R position switch	OFF
D position switch	OFF

COMPONENT OPERATING RANGE

Park/neutral position switch	The park/neutral position switch sends only one signal to the TCM

WIRING DIAGRAM

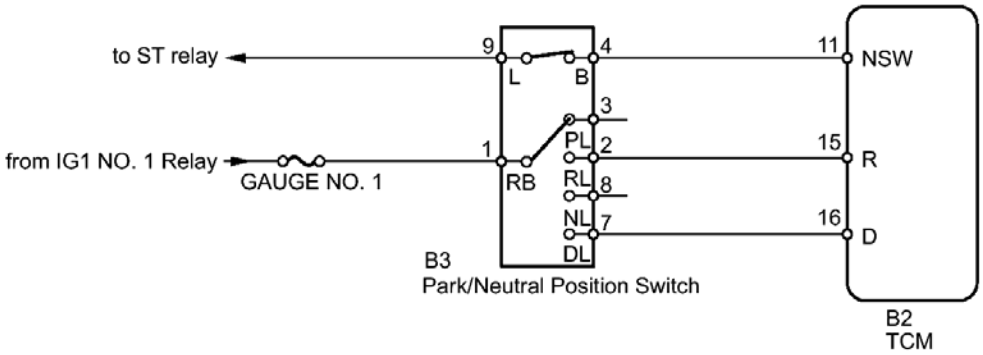

Fig. 12: Transmission Range Sensor Circuit - Wiring Diagram
Courtesy of TOYOTA MOTOR SALES, U.S.A., INC.

INSPECTION PROCEDURE

NOTE:

- **Inspect the fuses for circuits related to this system before performing the following inspection procedure.**
- **Perform the universal trip to clear permanent DTCs. Refer to DTC CHECK / CLEAR .**

HINT:

Using the Techstream to read the Data List allows the values or states of switches, sensors, actuators and other items to be read without removing any parts. This non-intrusive inspection can be very useful because intermittent conditions or signals may be discovered before parts or wiring is disturbed. Reading the Data List information early in troubleshooting is one way to save diagnostic time.

NOTE: **In the table below, the values listed under "Normal Condition" are reference values. Do not depend solely on these reference values when deciding whether a part is faulty or not.**

1. Connect the Techstream to the DLC3.
2. Turn the ignition switch to ON.
3. Turn the Techstream on.
4. Enter the following menus: Powertrain / ECT / Data List / All Data.
5. According to the display on the Techstream, read the Data List.

ECT

Tester Display	Measurement Item / Range	Normal Condition	Diagnostic Note
			When the shift lever

Neutral Position SW Signal	Park/neutral position switch status / ON or OFF	• ON: Shift lever is in P or N • OFF: Shift lever is not in P or N	position displayed on the Techstream differs from the actual position, adjustment of the Park/neutral position switch or the shift cable may be incorrect.
Shift SW Status (R Range)	Park/neutral position switch status / ON or OFF	• ON: Shift lever is in R • OFF: Shift lever is not in R	When the shift lever position displayed on the Techstream differs from the actual position, adjustment of the Park/neutral position switch or the shift cable may be incorrect.
Shift SW Status (D Range)	Park/neutral position switch status / ON or OFF	• ON: Shift lever is in D or S • OFF: Shift lever is not	When the shift lever position displayed on the Techstream differs from the actual position, adjustment of the Park/neutral position switch or

		in D or S	the shift cable may be incorrect.

PROCEDURE

1. **CHECK HARNESS AND CONNECTOR (IG1 RELAY - PARK/NEUTRAL POSITION SWITCH)**
   a. Disconnect the park/neutral position switch connector.

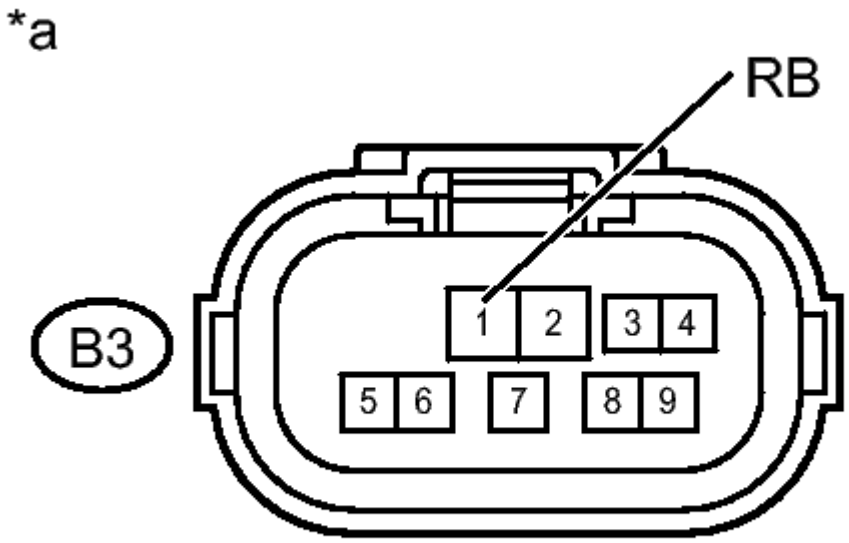

Fig. 13: Checking Harness And Connector (IG1 Relay - Park/Neutral Position Switch)
Courtesy of TOYOTA MOTOR SALES, U.S.A., INC.

   b. Turn the ignition switch to ON.
   c. Measure the voltage according to the value(s) in the table below.

   Standard Voltage

Tester Connection	Switch Condition	Specified Condition
B3-1 (RB) - Body ground	Ignition switch ON	11 to 14 V

TEXT IN ILLUSTRATION

	Front view

*a	of wire harness connector: (to Park/Neutral Position Switch)

NG --> REPAIR OR REPLACE HARNESS OR CONNECTOR

OK: Go to next step

2. **INSPECT TCM (NSW OUTPUT SIGNAL)**
   a. Turn the ignition switch to ON.

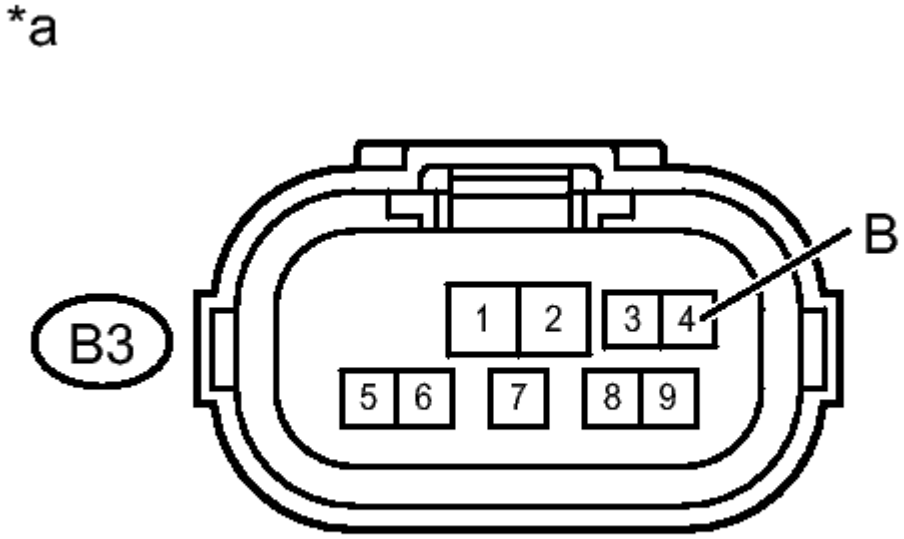

<u>Fig. 14: Measuring Voltage Of TCM (NSW Output Signal)</u>
Courtesy of TOYOTA MOTOR SALES, U.S.A., INC.

   b. Measure the voltage according to the value(s) in the table below.

   Standard Voltage

Tester Connection	Switch Condition	Specified Condition
B3-4 (B) - Body	Ignition switch	11 to 14 V

ground	ON	

TEXT IN ILLUSTRATION

*a	Front view of wire harness connector: (to Park/Neutral Position Switch)

NG --> See step 5

OK: Go to next step

3. **INSPECT PARK/NEUTRAL POSITION SWITCH**
   a. Measure the resistance according to the value(s) in the table below.

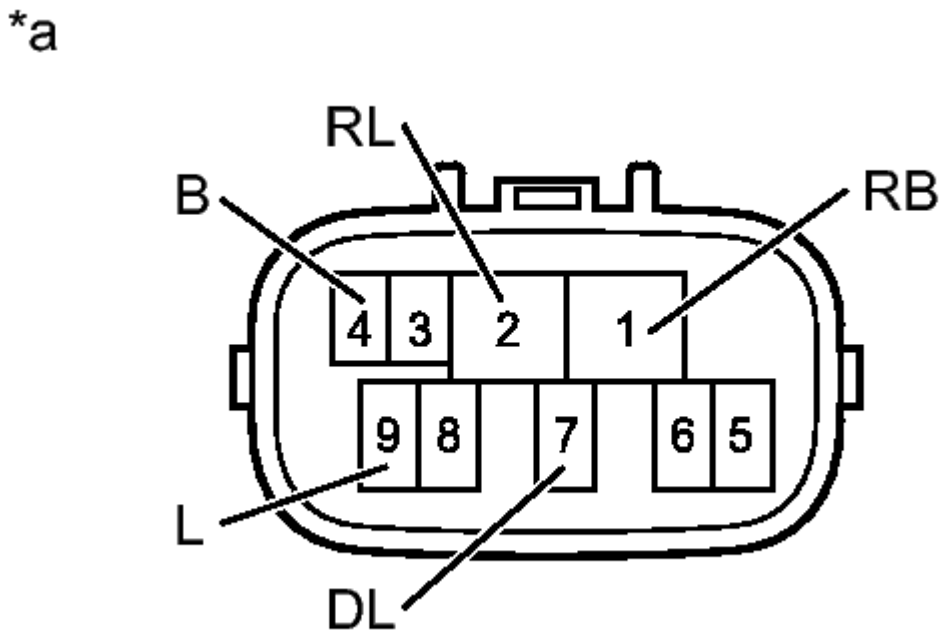

Fig. 15: Measuring Resistance Of Park/Neutral Position Switch
Courtesy of TOYOTA MOTOR SALES, U.S.A., INC.

Standard Resistance

Tester	Switch Condition	Specified

Connection	(Shift Lever Position)	Condition
4 (B) - 9 (L)	P or N	Below 1 ohms
	Except P and N	10 ohms or higher
1 (RB) - 2 (RL)	R	Below 1 ohms
	Except R	10 ohms or higher
1 (RB) - 7 (DL)	D, S, "+" or "-"	Below 1 ohms
	Except D, S, "+" and "-"	10 ohms or higher

TEXT IN ILLUSTRATION

*a	Component without harness connected: (Park/Neutral Position Switch)

NG --> See step 7

OK: Go to next step

4. **CHECK HARNESS AND CONNECTOR (PARK/NEUTRAL POSITION SWITCH - TCM)**
   a. Connect the park/neutral position switch connector.

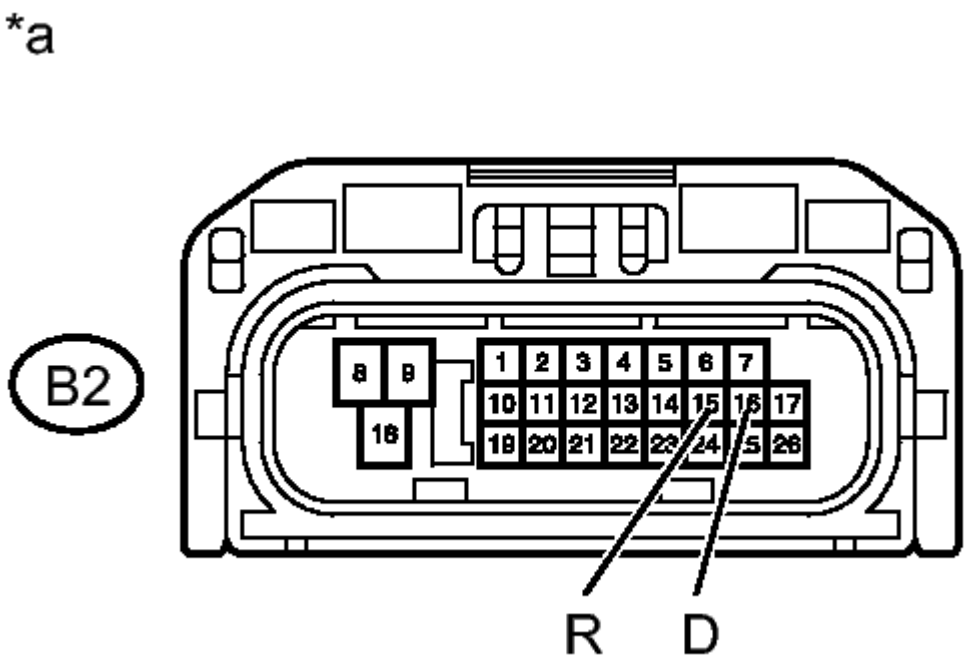

Fig. 16: Checking Harness And Connector (Park/Neutral Position Switch - TCM)
Courtesy of TOYOTA MOTOR SALES, U.S.A., INC.

b. Disconnect the TCM connector.
c. Turn the ignition switch to ON.
d. Measure the voltage according to the value(s) in the table below.

Standard Voltage

Tester Connection	Switch Condition (Shift Lever Position)	Specified Condition
B2-15 (R) - Body ground	R	11 to 14 V*
	Except R	Below 1 V
B2-16 (D) - Body ground	D, S, "+" or "-"	11 to 14 V
	Except D, S, "+" and "-"	Below 1 V

TEXT IN ILLUSTRATION

	Front

*a	view of wire harness connector: (to TCM)

HINT:

*: The voltage will drop slightly due to lighting up of the back up light.

NG --> REPAIR OR REPLACE HARNESS OR CONNECTOR

OK --> See step 6

5. **CHECK HARNESS AND CONNECTOR (PARK/NEUTRAL POSITION SWITCH - TCM)**
   a. Turn the ignition switch off.
   b. Disconnect the park/neutral position switch connector.
   c. Measure the resistance according to the value(s) in the table below.

   Standard Resistance

Tester Connection	Condition	Specified Condition
B3-4 (B) - B2-11 (NSW)	Always	Below 1 ohms
B3-4 (B) or B2-11 (NSW) - Body ground	Always	10 kohms or higher

NG --> REPAIR OR REPLACE HARNESS OR CONNECTOR

OK --> See step 6

6. **REPLACE TCM. Refer to REMOVAL**
7. **REPLACE PARK/NEUTRAL POSITION SWITCH. Refer to REMOVAL**

DTC P0711: TRANSMISSION FLUID TEMPERATURE SENSOR "A" PERFORMANCE

DESCRIPTION

The Automatic Transmission Fluid (ATF) temperature sensor converts the fluid temperature into a resistance value for use by the TCM.

The TCM applies a voltage to the temperature sensor through terminal THO1 of the TCM.

The sensor resistance changes with the ATF temperature. As the temperature becomes higher, the sensor resistance decreases.

One terminal of the sensor is grounded so that the sensor resistance decreases and the voltage goes down as the temperature becomes higher.

The TCM calculates the fluid temperature based on the voltage signal.

DTC No.	DTC Detection Condition	Trouble Area
P0711	One of the following conditions (A), (B) or (C) is met:	ATF temperature sensor
	(A) (a), (b) and (c) are detected: (2 trip detection logic). • (a) Intake air and engine coolant temperatures are more than 15°C (59°F) at engine start • (b) Soak time is more than 5 hours • (c) After normal driving for over 10 minutes and 5 km (3 miles) or more, ATF temperature is less than 20°C (68°F)	
	(B) Both (a) and (b) are detected: (2 trip detection logic). • (a) Intake air and engine coolant temperatures are more than -10°C (14°F) at engine start • (b) After normal driving for over 18 minutes and 20 seconds and 8 km (5 miles) or more, ATF temperature is less than 20°C (68°F)	
	(C) Both (a) and (b) are detected: (2 trip detection logic). • (a) Engine coolant temperature is less than 35°C (95°F) at engine start • (b) ATF temperature is 110°C (230°F) or more when engine coolant temperature reaches 60°C (140°F)	

MONITOR DESCRIPTION

This DTC indicates that there is a problem with output signals from the ATF temperature sensor and that the sensor itself is defective. The ATF temperature sensor converts the ATF temperature into an electrical

resistance value. Based on the resistance, the TCM determines the ATF temperature and detects an open or short in the ATF temperature circuit or a fault of the ATF temperature sensor.

After running the vehicle for a certain period, the ATF temperature should increase. If the ATF temperature is below 20°C (68°F) after running the vehicle for a certain period, the TCM will turn on the MIL and store the DTC.

MONITOR STRATEGY

Related DTCs	P0711: ATF temperature sensor
Required sensors/Components	ATF temperature sensor
Frequency of operation	Continuous
Duration	Condition A, B, C and D: 3 seconds Condition E: Continuous
MIL operation	2 driving cycles
Sequence of operation	None

TYPICAL ENABLING CONDITIONS

ALL

The monitor will run whenever this DTC is not present. (Not circuit malfunction)	P0712, P0713 (ATF temperature sensor circuit (TFT sensor)) P0115, P0117, P0118 (ECT sensor circuit) P0112, P0113 (IAT sensor circuit) P0715, P0717 (Input speed sensor (NT) circuit) P0791, P0793 (Output speed sensor (NC) circuit) P0748 (Shift solenoid valve SL1 circuit) P0778 (Shift solenoid valve SL2 circuit) P0798 (Shift solenoid valve SL3 circuit) P2810 (Shift solenoid valve SL4 circuit) P0327, P0328, P0332, P0333 (KCS sensor circuit) P0120, P0121, P0122, P0123, P0220, P0222, P0223, P0604, P0606, P060A, P060B, P060D, P060E, P0657, P1607, P2102, P2103, P2111, P2112, P2118, P2119, P2135 ((ETCS) Electronic throttle control system) U0100 (CAN communication system) P2610 (Soak timer circuit)
TFT (Transmission fluid temperature) sensor circuit	No circuit malfunction
ECT (Engine coolant temperature) sensor circuit	No circuit malfunction
IAT (Intake air temperature) sensor circuit	No circuit malfunction
Input speed sensor (NT) circuit	No circuit malfunction
Output speed sensor (NC) circuit	No circuit malfunction
Shift solenoid valve SL1 circuit	No circuit malfunction
Shift solenoid valve SL2 circuit	No circuit malfunction

Shift solenoid valve SL3 circuit	No circuit malfunction
Shift solenoid valve SL4 circuit	No circuit malfunction
KCS (Knock control sensor) circuit	No circuit malfunction
Soak timer circuit	No circuit malfunction
(ETCS) Electronic throttle control system	Not system down
CAN communication system	Not system down
Engine	Starting
Time after engine start	12 seconds or more
ECT	-15°C (5°F) or more

CONDITION A:

Time after engine start	10 minutes
Driving distance after engine start	5 km (3 miles) or more
IAT (12 seconds after engine start)	15°C (59°F) or more
ECT (12 seconds after engine start)	15°C (59°F) or more
Soak time	5 hours
Accumulated driving time *1	115 seconds or more
*1: Following conditions are met	
Engine speed (NE) - Input speed (NT)	50 RPM or more
Output speed (NC)	400 RPM or more
Throttle valve opening angle	3% or more
Shift position	Not N or P

CONDITION B:

Time after engine start	18 minutes and 20 seconds
Driving distance after engine start	8 km (5 miles) or more
IAT (12 seconds after engine start)	-10°C (14°F) or more
ECT (12 seconds after engine start)	-10°C (14°F) or more
Accumulated driving time *1	200 seconds or more

CONDITION C:

Time after engine start	30 minutes
Driving distance after engine start	15 km (9.3 miles)
IAT (12 seconds after engine start)	-15°C (5°F) or more
ECT (12 seconds after engine start)	-15°C (5°F) or more
Accumulated driving time *1	400 seconds or more

CONDITION D:

Time after engine start	40 minutes
Driving distance after engine start	20 km (12.4 miles)
Accumulated driving time *1	550 seconds or more

CONDITION E:

Time after ECT reaches 60°C (140°F)	10 seconds or more
ATF temperature (12 seconds after engine start)	110°C (230°F) or more
ECT (12 seconds after engine start)	Below 35°C (95°F)

TYPICAL MALFUNCTION THRESHOLDS

CONDITION A, B, C AND D:

ATF temperature	Below 20°C (68°F)

CONDITION E:

ATF temperature	110°C (230°F) or more

COMPONENT OPERATING RANGE

ATF temperature	20 to 110°C (68 to 230°F)

WIRING DIAGRAM

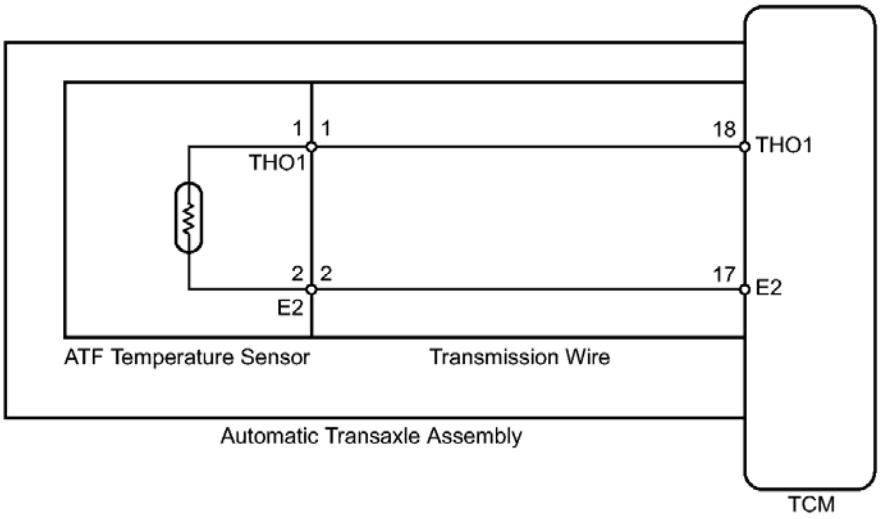

Fig. 17: Transmission Fluid Temperature Sensor Circuit - Wiring Diagram
Courtesy of TOYOTA MOTOR SALES, U.S.A., INC.

INSPECTION PROCEDURE

NOTE:

- **Perform the universal trip to clear permanent DTCs. Refer to DTC CHECK / CLEAR .**
- **If DTCs P0711 and P2610 are output simultaneously, confirm that the ATF temperature is as specified in "Normal Condition" using the Techstream**

first. When the ATF temperature is as specified in "Normal Condition", perform troubleshooting for DTC P2610. Refer to DTC P2610: ECM / PCM Internal Engine Off Timer Performance .

- **In the table below, the values listed under "Normal Condition" are reference values.**

HINT:

Using the Techstream to read the Data List allows the values or states of switches, sensors, actuators and other items to be read without removing any parts. This non-intrusive inspection can be very useful because intermittent conditions or signals may be discovered before parts or wiring is disturbed. Reading the Data List information early in troubleshooting is one way to save diagnostic time.

1. Warm up the engine.
2. Turn the ignition switch off.
3. Connect the Techstream to the DLC3.
4. Turn the ignition switch to ON.
5. Turn the Techstream on.
6. Enter the following menus: Powertrain / ECT / Data List / All Data.
7. According to the display on the Techstream, read the Data List.

ECT

Tester Display	Measurement Item/Range	Normal Condition	Diagnostic Note
A/T Oil Temperature 1	ATF temperature sensor value/ Min.: -40°C (-40°F) Max.: 215°C (419°F)	• After stall speed test: Approximately 80°C (176°F) • While engine is cold: Equal to ambient temperature	If value is -40°C (-40°F) or 150°C (302°F), ATF temperature sensor circuit is open or short circuited

HINT:

When DTC P0712 is output and the Techstream indicates 150°C (302°F) or more, there is a short circuit.

When DTC P0713 is output and the Techstream indicates -40°C (-40°F), there is an open circuit.

Measure the resistance between terminal THO1 (OT) and body ground.

Temperature	

Displayed	Malfunction
-40°C (-40°F)	Open circuit
150°C (302°F) or more	Short circuit

HINT:

If a circuit related to the ATF temperature sensor becomes open, P0713 is immediately set (in 0.5 seconds). When P0713 is set, P0711 cannot be detected.

It is not necessary to inspect the circuit when P0711 is set.

PROCEDURE

1. **CHECK OTHER DTCS OUTPUT (IN ADDITION TO DTC P0711)**
   a. Connect the Techstream to the DLC3.
   b. Turn the ignition switch to ON.
   c. Turn the Techstream on.
   d. Enter the following menus: Powertrain / ECT / Trouble Codes.
   e. Read the DTCs using the Techstream.

   RESULT

Result	Proceed to
Only P0711 is output	A
P0711 and other DTCs are output	B

   HINT:

   If any other codes besides P0711 are output, perform troubleshooting for those DTCs first.

B --> See step 3

A: Go to next step

2. **CHECK TRANSMISSION FLUID LEVEL**
   a. Check the transmission fluid level. Refer to **ADJUSTMENT** .

OK

Automatic transmission fluid level is correct.

NG --> ADJUST FLUID LEVEL

OK --> See step 4

3. **GO TO DTC CHART. Refer to DIAGNOSTIC TROUBLE CODE CHART**
4. **REPLACE ATF TEMPERATURE SENSOR ASSEMBLY. Refer to REMOVAL**

DTC P0712: TRANSMISSION FLUID TEMPERATURE SENSOR "A" CIRCUIT LOW INPUT; DTC P0713: TRANSMISSION FLUID TEMPERATURE SENSOR "A" CIRCUIT HIGH INPUT

DESCRIPTION

The Automatic Transmission Fluid (ATF) temperature sensor converts the fluid temperature into a resistance value for use by the TCM.

The TCM applies a voltage to the temperature sensor through terminal THO1 of the TCM.

The sensor resistance changes with the ATF temperature. As the temperature becomes higher, the sensor resistance decreases.

One terminal of the sensor is grounded so that the sensor resistance decreases and the voltage goes down as the temperature becomes higher.

The TCM calculates the fluid temperature based on the voltage signal.

DTC No.	DTC Detection Condition	Trouble Area
P0712	ATF temperature sensor resistance is less than 79 ohms for 0.5 seconds or more (1 trip detection logic)	• Short in ATF temperature sensor circuit • Transmission wire • ATF temperature sensor • TCM
P0713	ATF temperature sensor resistance is more than 156 kohms for 0.5 seconds or more. Either of the following conditions is met (1 trip detection logic):	• Open in ATF temperature sensor circuit • Transmission wire • ATF temperature sensor • TCM
	Condition (A): 335 seconds or more have elapsed after the engine start when engine coolant temperature or intake air temperature is -29.375°C (-	

	20.875°F) or less.	
	Condition (B): 10 seconds or more have elapsed after the engine start when engine coolant temperature and intake air temperature are more than -29.375°C (- 20.875°F).	

MONITOR DESCRIPTION

These DTCs indicate an open or short in the ATF temperature sensor circuit. The ATF temperature sensor converts ATF temperature into an electrical resistance value. Based on the resistance, the TCM determines the ATF temperature, and the TCM detects an open or short in the ATF temperature circuit. If the resistance value of the ATF temperature is less than 79 ohms*1 or more than 156 kohms*2, the TCM interprets this as a fault in the ATF sensor or wiring. The TCM will turn on the MIL and store the DTC.

*1: 150°C (302°F) or more is indicated regardless of the actual ATF temperature.

*2: -40°C (-40°F) is indicated regardless of the actual ATF temperature.

HINT:

The ATF temperature can be checked on the Techstream display.

MONITOR STRATEGY

Related DTCs	P0712: ATF temperature sensor/Range check (Low resistance) P0713: ATF temperature sensor/Range check (High resistance)
Required sensors/Components	ATF temperature sensor
Frequency of operation	Continuous
Duration	0.5 seconds
MIL operation	Immediately
Sequence of operation	None

TYPICAL ENABLING CONDITIONS

P0712: RANGE CHECK (LOW RESISTANCE)

The monitor will run whenever these DTCs are not	None

present.	
Battery voltage	8 V or more
Ignition switch	ON

P0713: Range check (High resistance)

One of the following conditions is met: Condition (A) or (B)

CONDITION (A)

Engine coolant temperature (ECT) or intake air temperature (IAT) at engine start	-29.375° C (-20.875° F) or less
Time after engine start	335 seconds or more
ECT sensor circuit fail (P0115, P0117, P0118)	Not detected
IAT sensor circuit fail (P0112, P0113)	Not detected

CONDITION (B)

Engine coolant temperature (ECT) or intake air temperature (IAT) at engine start	More than -29.375° C (-20.875° F)
Time after engine start	10 seconds or more
ECT sensor	

circuit fail (P0115, P0117, P0118)	Not detected
IAT sensor circuit fail (P0112, P0113)	Not detected

TYPICAL MALFUNCTION THRESHOLDS

P0712: RANGE CHECK (LOW RESISTANCE)

ATF temperature sensor resistance (ATF temperature sensor output temperature)	Less than 79 ohms Higher than 164°C(327.2°F))

P0713: RANGE CHECK (HIGH RESISTANCE)

ATF temperature sensor resistance (ATF temperature sensor output temperature)	More than 156 kohms Less than -48°C(-54.4°F))

COMPONENT OPERATING RANGE

ATF temperature sensor resistance (ATF temperature sensor output temperature)	79 to 156 kohms -48 to 164°C(-54.4 to 327.2°F))

WIRING DIAGRAM

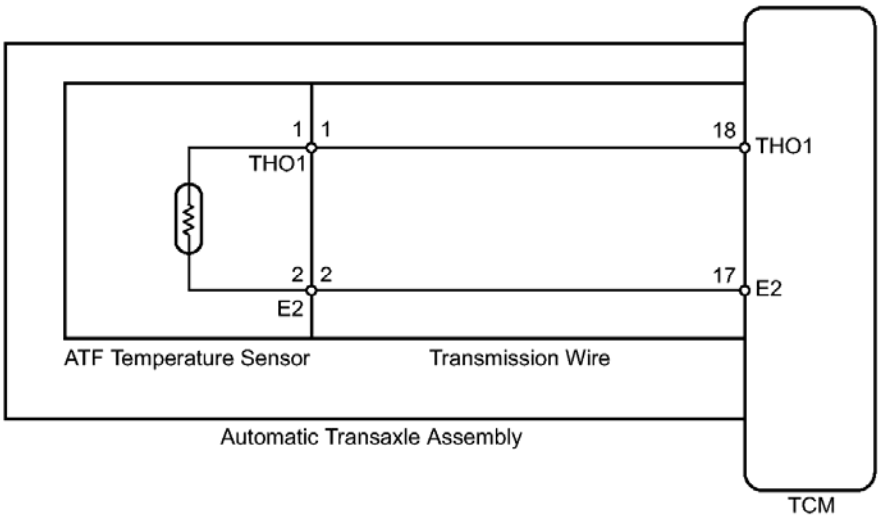

Fig. 18: Transmission Fluid Temperature Sensor Circuit - Wiring Diagram
Courtesy of TOYOTA MOTOR SALES, U.S.A., INC.

INSPECTION PROCEDURE

NOTE: **Perform the universal trip to clear permanent DTCs. Refer to DTC CHECK / CLEAR .**

HINT:

Using the Techstream to read the Data List allows the values or states of switches, sensors, actuators and other items to be read without removing any parts. This non-intrusive inspection can be very useful because intermittent conditions or signals may be discovered before parts or wiring is disturbed. Reading the Data List information early in troubleshooting is one way to save diagnostic time.

NOTE: **In the table below, the values listed under "Normal Condition" are reference values. Do not depend solely on these reference values when deciding whether a part is faulty or not.**

1. Warm up the engine.
2. Turn the ignition switch off.
3. Connect the Techstream to the DLC3.
4. Turn the ignition switch to ON.
5. Turn the Techstream on.
6. Enter the following menus: Powertrain / ECT / Data List / All Data.
7. According to the display on the Techstream, read the Data List.

ECT

Tester Display	Measurement Item/Range	Normal Condition	Diagnostic Note
A/T Oil Temperature 1	ATF temperature sensor value/ Min.: -40°C (-40°F) Max.: 215°C (419°F)	• After stall speed test: Approximately 80°C (176°F) • While engine is cold: Equal to ambient temperature	If value is -40°C (-40°F) or 150°C (302°F), ATF temperature sensor circuit is open or short circuited

HINT:

When DTC P0712 is output and the Techstream indicates 150°C (302°F) or more, there is a short circuit.

When DTC P0713 is output and the Techstream indicates -40°C (-40°F), there is an open circuit.

Measure the resistance between terminal THO1 (OT) and body ground.

Temperature Displayed	Malfunction
-40°C (-40°F)	Open circuit
150°C (302°F) or more	Short circuit

HINT:

If the circuit related to the ATF temperature sensor becomes open, P0713 is immediately set (in 0.5 seconds). When P0713 is set, P0711 cannot be detected.

It is not necessary to inspect the circuit when P0711 is set.

PROCEDURE

1. **INSPECT TRANSMISSION WIRE (ATF TEMPERATURE SENSOR)**
   a. Remove the TCM from the transaxle.

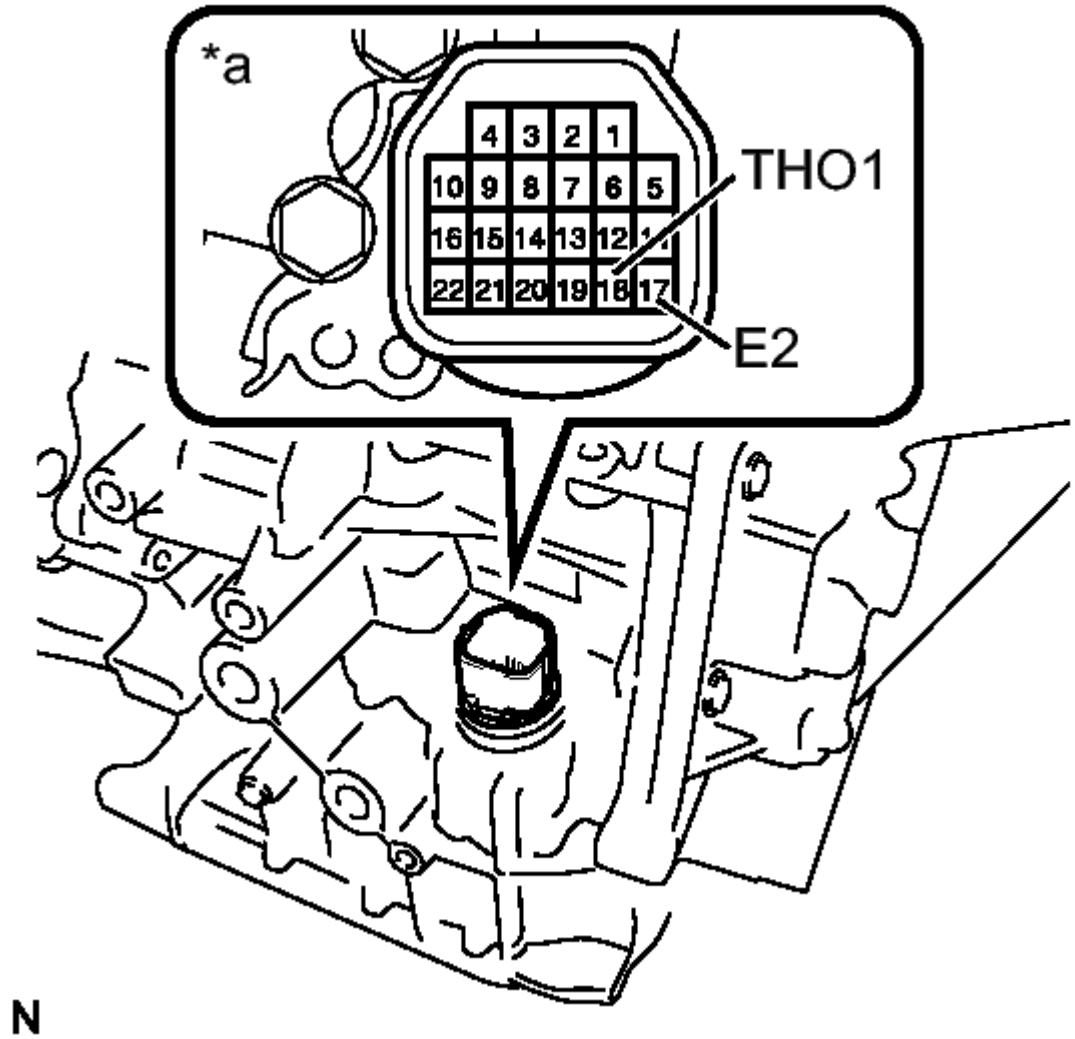

Fig. 19: Inspecting Transmission Wire (ATF Temperature Sensor)
Courtesy of TOYOTA MOTOR SALES, U.S.A., INC.

b. Measure the resistance according to the value(s) in the table below.

Standard Resistance

Tester Connection	Condition	Specified Condition
17 (E2) - 18 (THO1)	Always	79 ohms to 156 kohms
17 (E2) - Body ground	Always	10 kohms or higher
18 (THO1)		

- Body ground	Always	10 kohms or higher

TEXT IN ILLUSTRATION

*a	Component without harness connected: (Transmission Wire)

HINT:

If the resistance is out of the specified range with the ATF temperature shown in the table below, the driveability of the vehicle may decrease.

ATF Temperature	Specified Condition
10°C (50°F)	5 to 8 kohms
25°C (77°F)	2.5 to 4.5 kohms
110°C (230°F)	0.22 to 0.28 kohms

NG --> See step 2

OK --> See step 4

2. **INSPECT ATF TEMPERATURE SENSOR**
   a. Disconnect the transmission wire connector from the ATF temperature sensor assembly.

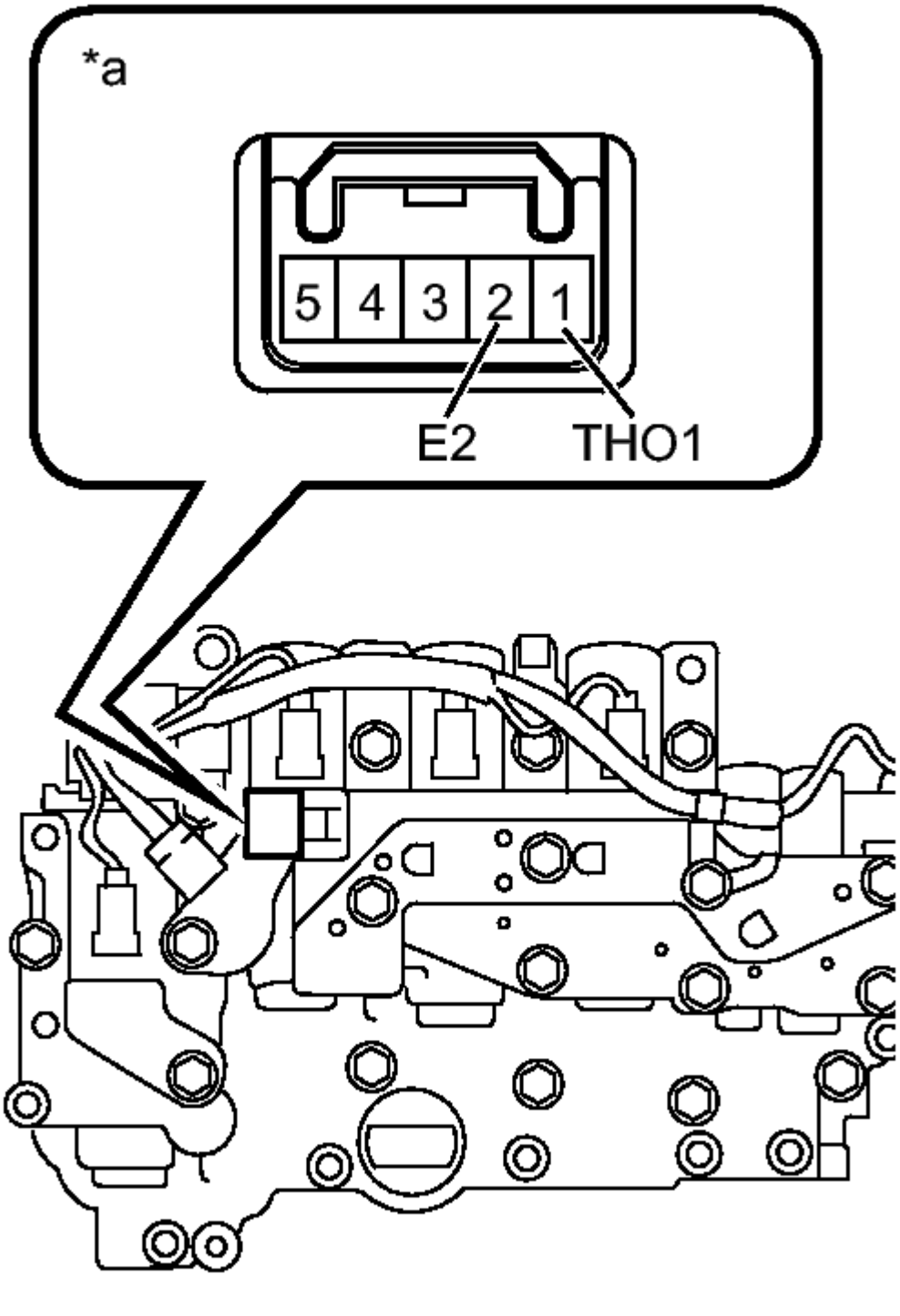

Fig. 20: Inspecting ATF Temperature Sensor
Courtesy of TOYOTA MOTOR SALES, U.S.A., INC.

b. Measure the resistance according to the value(s) in the table below.

Standard Resistance

Tester Connection	Condition	Specified Condition
1 (THO1) - 2 (E2)	Always	79 ohms to 156 kohms
1 (THO1) - Body ground	Always	10 kohms or higher
2 (E2) - Body ground	Always	10 kohms or higher

TEXT IN ILLUSTRATION

*a	Component without harness connected: (ATF Temperature Sensor)

HINT:

If the resistance is out of the specified range with the ATF temperature shown in the table below, the driveability of the vehicle may decrease.

ATF Temperature	Specified Condition
10°C (50°F)	5 to 8 kohms
25°C (77°F)	2.5 to 4.5 kohms
110°C (230°F)	0.22 to 0.28 kohms

NG --> See step 5

OK --> See step 3

3. **REPLACE TRANSMISSION WIRE. Refer to REMOVAL**
4. **REPLACE TCM. Refer to REMOVAL**
5. **REPLACE ATF TEMPERATURE SENSOR ASSEMBLY. Refer to REMOVAL**

DTC P0715: INPUT / TURBINE SPEED SENSOR CIRCUIT MALFUNCTION; DTC P0717: INPUT SPEED SENSOR CIRCUIT NO SIGNAL

DESCRIPTION

This sensor detects the rotation speed of the turbine which shows the input speed of the transaxle. By comparing the input speed signal (NT) with the output speed sensor signal (NC), the TCM detects the shift timing of the gears and appropriately controls the engine torque and hydraulic pressure according to various conditions, thus, providing smooth gear shifts.

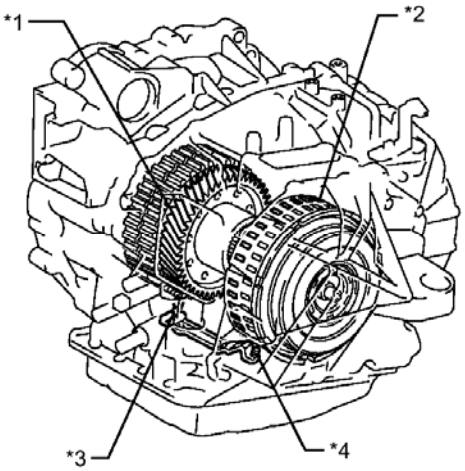

N

Fig. 21: Identifying Counter Gear, Clutch Drum, Input Speed Sensor And Output Speed Sensor
Courtesy of TOYOTA MOTOR SALES, U.S.A., INC.

TEXT IN ILLUSTRATION

*1	Counter Gear	*2	Clutch Drum
*3	Output Speed Sensor (NC)	*4	Input Speed Sensor (NT)

DTC No.	DTC Detection Condition	Trouble Area
P0715	When the speed sensor input voltage is either more than 1.9 V or less than 0.1 V for 4.5 seconds or more (1 trip detection logic).	
	All conditions below are detected for 5 seconds or more (1 trip detection logic). (a) Gear change is not being	

P0717	performed. (b) Gear position: 2nd, 3rd, 4th, 5th or 6th. (c) T/M output shaft speed: 1000 RPM or more. (d) Park/neutral position switch (NSW and R) is OFF (e) Park/neutral position switch and vehicle speed sensor are in normal operation. (f) T/M input shaft speed: Less than 300 RPM.	• Transmission revolution sensor (Input speed sensor NT) • Transmission wire • TCM

MONITOR DESCRIPTION

The NT terminal of the TCM detects a revolution signal from the input speed sensor (NT). The TCM calculates gear shifts comparing the input speed sensor (NT) with the output speed sensor (NC).

While the vehicle is operating in 2nd, 3rd, 4th, 5th or 6th gear with the shift lever in D, if the input shaft speed is less than 300 rpm*1 although the output shaft speed is more than 1000 RPM, the TCM will turn on the MIL and store the DTC.

*1: Pulse is not output or is irregularly output.

MONITOR STRATEGY

Related DTCs	P0715: Input Speed sensor (NT)/Range check P0717: Input Speed sensor (NT)/Verify pulse input
Required sensors/Components	Input Speed sensor (NT), Output Speed sensor (NC)
Frequency of operation	Continuous
Duration	P0715: 4.5 sec. P0717: 5 sec.
MIL operation	Immediately
Sequence of operation	None

TYPICAL ENABLING CONDITIONS

P0715:

Battery voltage	8 V or more
Ignition switch	ON
Starter	OFF

P0717:

The monitor will run whenever this DTC is not present.	P0746, P0748: Shift solenoid valve SL1 P0776, P0778: Shift solenoid valve SL2 P0796, P0798: Shift solenoid valve SL3 P2808, P2810: Shift solenoid valve SL2
Shift change	Shift change is completed before starting next shift change operation
TCM selected gear	2nd, 3rd, 4th, 5th or 6th
Output shaft speed	1000 RPM or more
Park/neutral position switch	OFF
R switch	OFF
Engine	Running
Transmission range switch fail (P0705)	Not detected
Turbine speed sensor range check fail (P0715)	Not detected
Battery voltage	8 V or more
Ignition switch	ON
Starter	OFF

TYPICAL MALFUNCTION THRESHOLDS

P0715:

Sensor voltage	Less than 0.1 V, or more than 1.9 V

P0717:

Sensor signal speed	Less than 300 RPM

COMPONENT OPERATING RANGE

Input speed sensor (NT)	Turbine speed is equal to engine speed with lock-up ON

WIRING DIAGRAM

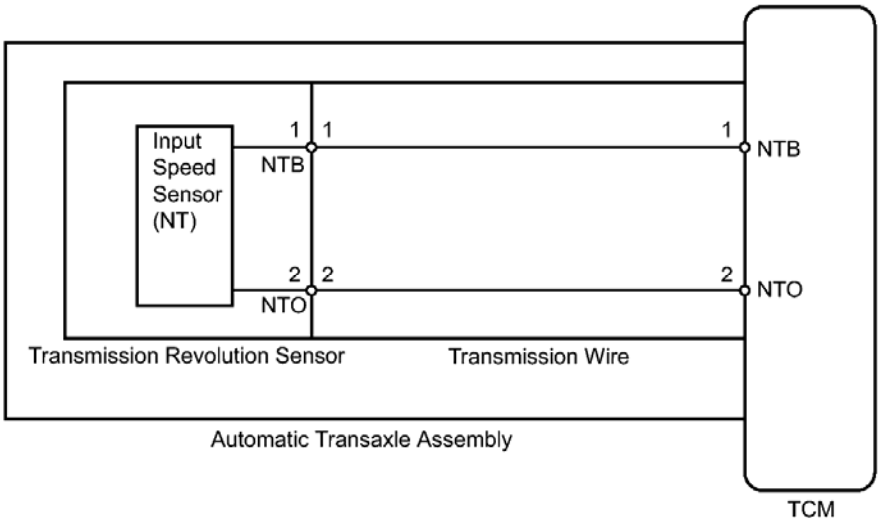

Fig. 22: Input / Turbine Speed Sensor Circuit - Wiring Diagram
Courtesy of TOYOTA MOTOR SALES, U.S.A., INC.

INSPECTION PROCEDURE

NOTE: **Perform the universal trip to clear permanent DTCs. Refer to DTC CHECK / CLEAR .**

HINT:

Using the Techstream to read the Data List allows the values or states of switches, sensors, actuators and other items to be read without removing any parts. This non-intrusive inspection can be very useful because intermittent conditions or signals may be discovered before parts or wiring is disturbed. Reading the Data List information early in troubleshooting is one way to save diagnostic time.

NOTE: **In the table below, the values listed under "Normal Condition" are reference values. Do not depend solely on these reference values when deciding whether a part is faulty or not.**

1. Warm up the engine.
2. Turn the ignition switch off.
3. Connect the Techstream to the DLC3.
4. Turn the ignition switch to ON.
5. Turn the Techstream on.
6. Enter the following menus: Powertrain / ECT / Data List / All Data.
7. According to the display on the Techstream, read the Data List.

ECT

Tester Display	Measurement Item/Range	Normal Condition	Diagnostic Note
SPD (NT)	Input shaft speed/ Min.: 0 RPM Max.: 12750 RPM	Lock-up is • ON (after warming up engine): Input turbine speed (NT) is equal to engine speed • OFF (idling with shift lever in N): Input turbine speed (NT) is nearly equal to engine speed	Data is displayed in increments of 50 RPM

HINT:

- SPD (NT) is always 0 while driving: Open or short in the sensor or circuit.
- SPD (NT) is always more than 0 and less than 300 RPM while driving the vehicle at 50 km/h (31 mph) or more: Sensor trouble, improper installation, or intermittent connection trouble of the circuit.

PROCEDURE

1. **INSPECT TRANSMISSION REVOLUTION SENSOR (SENSOR INSTALLATION)**
   a. Remove the valve body assembly.
   b. Make sure that the connector is properly connected, and check the transmission revolution sensor installation.

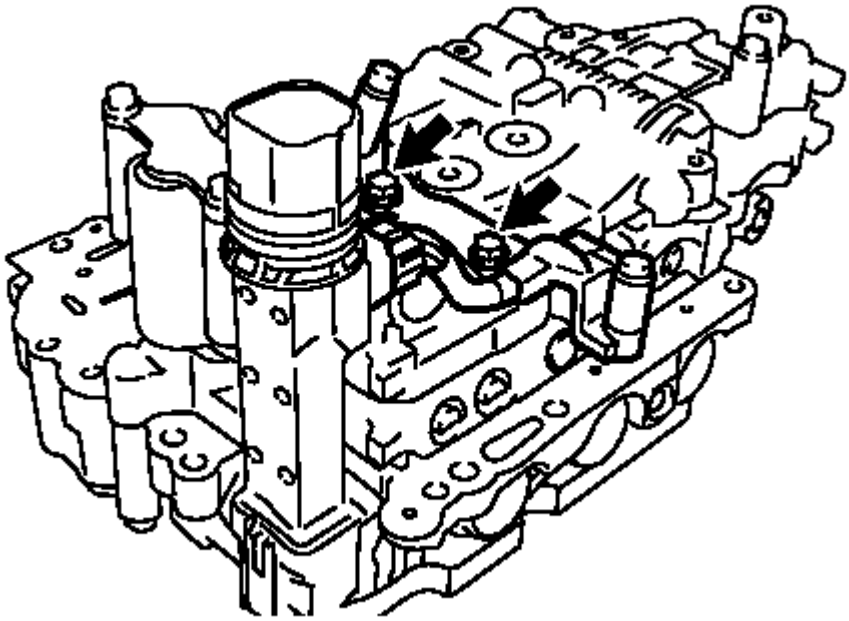

N

Fig. 23: Identifying Speed Sensor Bolts
Courtesy of TOYOTA MOTOR SALES, U.S.A., INC.

OK

The installation bolt is tightened properly and there is no clearance between the sensor and transmission valve body.

NG --> See step 6

OK: Go to next step

2. **INSPECT TRANSMISSION WIRE**
   a. Remove the TCM.

*a

*b

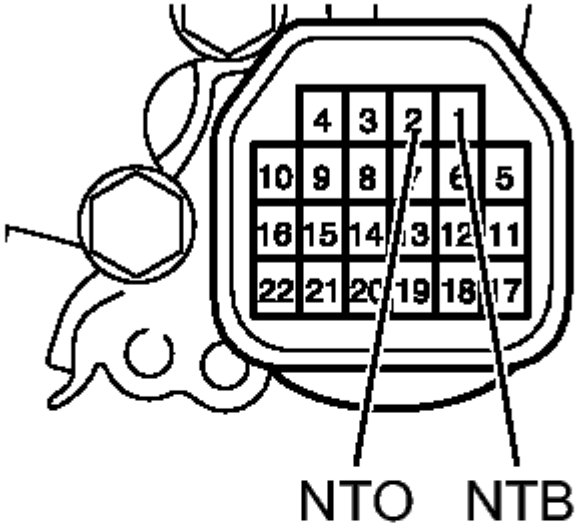

*c

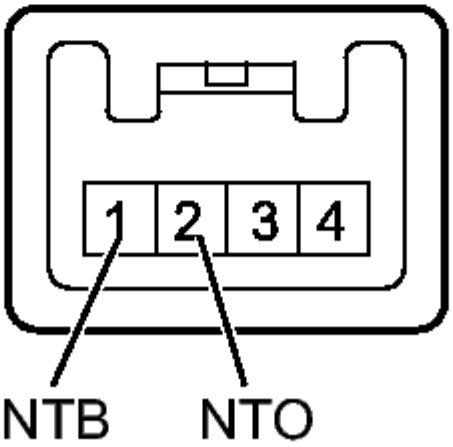

Fig. 24: Measuring Resistance Of Transmission Wire
Courtesy of TOYOTA MOTOR SALES, U.S.A., INC.

b. Disconnect the speed sensor connector from the transmission wire.
c. Measure the resistance according to the value(s) in the table below.

Standard Resistance

Tester Connection	Condition	Specified Condition
1 (NTB) - 1 (NTB)	Always	Below 1 ohms
2 (NTO) - 2 (NTO)	Always	Below 1 ohms
1 (NTB) - Body ground	Always	10 kohms or higher
2 (NTO) - Body ground	Always	10 kohms or higher
1 (NTB) - All other terminals except 2 (NTO)	Always	10 kohms or higher
2 (NTO) - All other terminals except 1 (NTB)	Always	10 kohms or higher

TEXT IN ILLUSTRATION

*a	Component without harness connected: (Transmission Wire)
*b	TCM Side:
*c	Sensor Side:

NG --> See step 7

OK: Go to next step

3. **REPLACE TRANSMISSION REVOLUTION SENSOR**
   a. Replace transmission revolution sensor. Refer to **REMOVAL** .

NEXT: Go to next step

4. **CHECK DTC OUTPUT**

a. Connect the Techstream to the DLC3.
b. Start the engine and turn the Techstream on.
c. Enter the following menus: Powertrain / ECT / Trouble Codes / Clear.

HINT:

Write down the currently output DTCs before clearing them.

d. Perform the monitor drive pattern. Refer to **MONITOR DRIVE PATTERN** .
e. Enter the following menus: Powertrain / ECT / Trouble Code.
f. Read the DTCs using the Techstream.

RESULT

Result	Proceed to
DTC not output	A
P0715 and/or P0717 is output	B

B --> See step 5

A --> END

5. **REPLACE TCM. Refer to REMOVAL**
6. **SECURELY INSTALL OR REPLACE TRANSMISSION REVOLUTION SENSOR. Refer to INSTALLATION**
7. **REPLACE TRANSMISSION WIRE. Refer to REMOVAL**

DTC P0724: BRAKE SWITCH "B" CIRCUIT HIGH

DESCRIPTION

The purpose of this circuit is to prevent the engine from stalling when the brakes are suddenly applied while driving in the lock-up condition.

When the brake pedal is depressed, this switch sends a signal to the TCM. Then the TCM cancels the operation of the lock-up clutch while braking is in progress.

DTC No.	DTC Detection Condition	Trouble Area
	The stop light switch remains ON	

P0724	even when the vehicle is driven in a STOP (less than 3 km/h (1.86 mph)) and GO (30 km/h (18.65 mph) or more) fashion 5 times. (2 trip detection logic).	• Short in stop light switch signal circuit • Stop light switch • TCM

MONITOR DESCRIPTION

This DTC indicates that the stop light switch remains ON. When the stop light switch remains ON during "stop and go" driving, the TCM interprets this as a fault in the stop light switch, illuminates the MIL, and stores the DTC. The vehicle must stop (less than 3 km/h (1.86 mph)) and go (30 km/h (18.65 mph) or more) five times for two consecutive driving cycles in order to set this DTC.

MONITOR STRATEGY

Related DTCs	P0724: Stop light switch/Range check/Rationality
Required sensors/Components	Stop light switch
Frequency of operation	Continuous
Duration	GO and STOP 5 times
MIL operation	2 driving cycles
Sequence of operation	None

TYPICAL ENABLING CONDITIONS

GO and STOP are defined as follows;

THE STOP LIGHT SWITCH REMAINS ON DURING GO AND STOP 5 TIMES.

The monitor will run whenever this DTC is not present.	None
GO: (Vehicle speed is 30 km/h (18.6 mph) or more)	30 km/h (18.65 mph) or more
STOP: (Vehicle speed is less than 3 km/h (1.86 mph))	Less than 3 km/h (1.86 mph)
Starter	OFF
Battery voltage	8 V or more
Ignition switch	ON

TYPICAL MALFUNCTION THRESHOLDS

Switch status	ON stuck

WIRING DIAGRAM

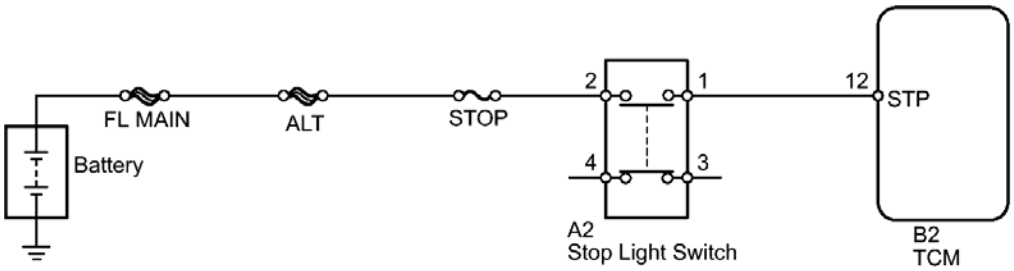

Fig. 25: Brake Switch Circuit - Wiring Diagram
Courtesy of TOYOTA MOTOR SALES, U.S.A., INC.

INSPECTION PROCEDURE

NOTE:

- **Inspect the fuses for circuits related to this system before performing the following inspection procedure.**
- **Perform the universal trip to clear permanent DTCs. Refer to DTC CHECK / CLEAR .**

1. **DATA LIST**

HINT:

Using the Techstream to read the Data List allows the values or states of switches, sensors, actuators and other items to be read without removing any parts. This non-intrusive inspection can be very useful because intermittent conditions or signals may be discovered before parts or wiring is disturbed. Reading the Data List information early in troubleshooting is one way to save diagnostic time.

NOTE: **In the table below, the values listed under "Normal Condition" are reference values. Do not depend solely on these reference values when deciding whether a part is faulty or not.**

a. Warm up the engine.
b. Turn the ignition switch off.
c. Connect the Techstream to the DLC3.
d. Turn the ignition switch to ON.
e. Turn the Techstream on.
f. Enter the following menus: Powertrain / ECT / Data List / All Data.
g. According to the display on the Techstream, read the Data List.

ECT

Tester Display	Measurement Item/Range	Normal Condition	Diagnostic Note
Stop Light Switch	Stop light switch status/ ON or OFF	Brake pedal: • Depressed: ON • Released: OFF	-

PROCEDURE

1. **INSPECT STOP LIGHT SWITCH**
   a. Remove the stop light switch.

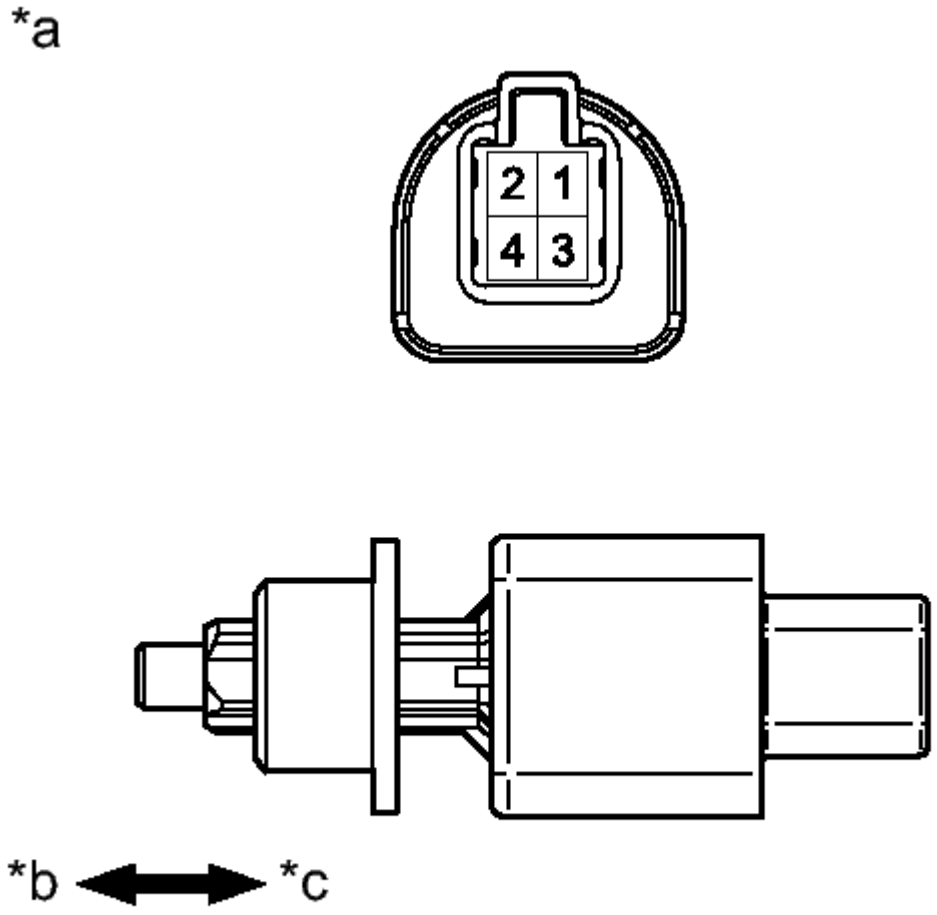

Fig. 26: Inspecting Stop Light Switch

Courtesy of TOYOTA MOTOR SALES, U.S.A., INC.

b. Measure the resistance according to the value(s) in the table below.

Standard Resistance

Tester Connection	Switch Condition	Specified Condition
1 - 2	Pin not pushed	Below 1 ohms
	Pin pushed	10 kohms or higher
3 - 4	Pin pushed	Below 1 ohms
	Pin not pushed	10 kohms or higher

TEXT IN ILLUSTRATION

*a	Component without harness connected: (Stop Light Switch)
*b	Free
*c	Pushed in

NG --> See step 4

OK: Go to next step

2. **CHECK HARNESS AND CONNECTOR (STOP LIGHT SWITCH - TCM)**
   a. Install the stop light switch.

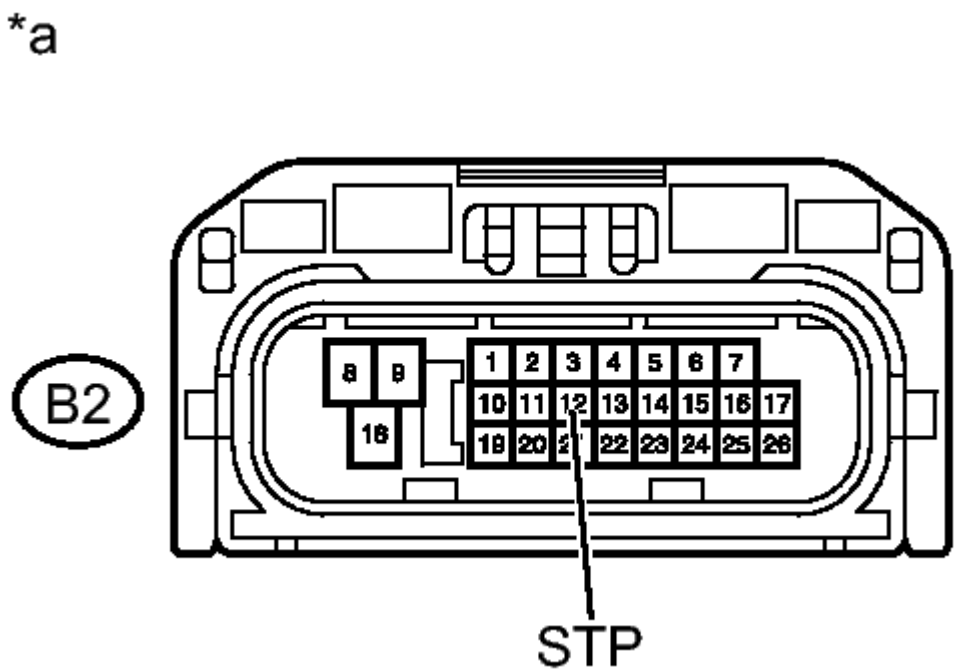

Fig. 27: Checking Harness And Connector (Stop Light Switch - TCM)
Courtesy of TOYOTA MOTOR SALES, U.S.A., INC.

b. Connect the stop light switch connector.
c. Disconnect the TCM connector.
d. Measure the voltage according to the value(s) in the table below.

Standard Voltage

Tester Connection	Condition	Specified Condition
B2-12 (STP) - Body ground	Brake pedal is depressed	7.5 to 14 V
	Brake pedal is released	Below 1 V

TEXT IN ILLUSTRATION

*a	Front view of wire harness connector: (to TCM)

NG --> REPAIR OR REPLACE HARNESS OR CONNECTOR

OK --> See step 3

3. **REPLACE TCM. Refer to REMOVAL**
4. **REPLACE STOP LIGHT SWITCH. Refer to REMOVAL**

DTC P0741: TORQUE CONVERTER CLUTCH SOLENOID PERFORMANCE (SHIFT SOLENOID VALVE SL)

DESCRIPTION

The TCM uses signals from the throttle position sensor, air-flow meter, input speed sensor, output speed sensor and crankshaft position sensor to help determine the engagement timing of the lock-up clutch. The TCM monitors the engagement of the clutch using the input speed sensor, output speed sensor and crankshaft position sensor.

Then the TCM compares the engagement condition of the lock-up clutch with the lock-up schedule in the TCM memory to detect shift solenoid valve SL, valve body and torque converter assembly mechanical problems.

DTC No.	DTC Detection Condition	Trouble Area
P0741	When both of the following are detected (2 trip detection logic): • Lock-up does not occur when requested. • Transmission fluid pressure switch No. 3 is ON.	• Shift solenoid valve SL remains closed • Valve body is blocked • Torque converter assembly • Automatic transaxle (clutch, brake or gear etc.) • Transmission wire • Line pressure is too low

MONITOR DESCRIPTION

Torque converter lock-up is controlled by the TCM based on the input speed (NT), output speed (NC), engine speed (NE), engine load, engine temperature, vehicle speed, automatic transmission fluid (ATF) temperature, and gear selection. The TCM determines the lock-up status of the torque converter by comparing the engine speed (NE) to the input speed (NT). The TCM calculates the actual transmission gear by comparing the input speed (NT) to the output speed (NC). When conditions are appropriate, the TCM requests "lock-up" by applying control voltage to shift solenoid SL. When SL is turned on, it applies pressure to the lock-up relay valve and locks the torque converter assembly.

If the TCM detects no lock-up after lock-up has been requested or if it detects lock-up when it is not requested, the TCM interprets this as a fault in shift solenoid valve SL or lock-up system performance. The TCM will turn on the MIL and store the DTC.

HINT:

Example:

When the following is met, the system judges it as a malfunction.

- There is a difference in rotation (speed) between the input side (engine speed) and output side (input turbine speed) of the torque converter when the TCM commands lock-up.

  (Engine speed is at least 70 RPM greater than the input turbine speed.)

MONITOR STRATEGY

Related DTCs	P0741: Shift solenoid valve SL OFF malfunction Shift solenoid valve SL ON malfunction
Required sensors/Components	Shift solenoid valve SL, Input speed sensor (NT), Output speed sensor (NC), Crankshaft position sensor (NE), Throttle position sensor (VPA1), Mass air flow sensor (MAF), Transmission temperature sensor (THO1), Engine coolant temperature sensor (ECT)
Frequency of operation	Continuous
Duration	OFF malfunction 3.5 seconds
MIL operation	2 driving cycles
Sequence of operation	None

TYPICAL ENABLING CONDITIONS

ALL:

The monitor will run whenever this DTC is not present. (Not circuit malfunction)	P0712, P0713 (ATF temperature sensor circuit (TFT sensor)) P0115, P0117, P0118 (ECT sensor circuit) P0715, P0717 (Input speed sensor (NT) circuit) P0791, P0793 (Output speed sensor (NC) circuit) P0748 (Shift solenoid valve SL1 circuit) P0778 (Shift solenoid valve SL2 circuit) P0798 (Shift solenoid valve SL3 circuit) P2810 (Shift solenoid valve SL4 circuit) P2759 (Shift solenoid valve SLU circuit) P2769, P2770 (Shift solenoid valve SL circuit) P0327, P0328, P0332, P0333 (KCS sensor circuit) P0120, P0121, P0122, P0123, P0220, P0222, P0223, P0604, P0606, P060A, P060B, P060D, P060E, P0657, P1607, P2102, P2103, P2111, P2112, P2118, P2119, P2135 ((ETCS) Electronic throttle control system)

	U0100 (CAN communication system)
Engine coolant temperature	40°C (104°F) or more
Spark advance from Max. retard timing by KCS control	0°CA or more
Transmission range	D
TFT (Transmission fluid temperature)	-10°C (14°F) or more
TFT (Transmission fluid temperature) sensor circuit	No circuit malfunction
ECT (Engine coolant temperature) sensor circuit	No circuit malfunction
Input speed sensor (NT) circuit	No circuit malfunction
Output speed sensor (NC) circuit	No circuit malfunction
Shift solenoid valve SL1 circuit	No circuit malfunction
Shift solenoid valve SL2 circuit	No circuit malfunction
Shift solenoid valve SL3 circuit	No circuit malfunction
Shift solenoid valve SL4 circuit	No circuit malfunction
Shift solenoid valve SLU circuit	No circuit malfunction
Shift solenoid valve SL circuit	No circuit malfunction
KCS (Knock control sensor circuit)	No circuit malfunction
(ETCS) Electronic throttle control system	Not system down
CAN communication system	Not system down
Engine	Starting
TCM selected gear	Not 1st
Vehicle speed	25 km/h (15.5 mph) or more
Input speed (NT) / Output speed (NO) with 1st	3.304 to 7.724
Input speed (NT) / Output speed (NO) with 2nd	1.901 to 2.340
Input speed (NT) / Output speed (NO) with 3rd	1.399 to 1.649
Input speed (NT) / Output speed (NO) with 4th	0.998 to 1.138
Input speed (NT) / Output speed (NO) with 5th	0.705 to 0.836
Input speed (NT) / Output speed (NO) with 6th	0.568 to 0.695

TYPICAL MALFUNCTION THRESHOLDS

OFF MALFUNCTION:

Following conditions are met	(a) and (b)
(a) Engine Speed (NE) - Input speed (NT)	70 RPM or more
(b) Transmission fluid pressure switch	ON

INSPECTION PROCEDURE

NOTE: **Perform the universal trip to clear permanent DTCs. Refer to DTC CHECK / CLEAR .**

HINT:

Using the Techstream to perform Active Tests allows relays, VSVs, actuators and other items to be operated without removing any parts. This non-intrusive functional inspection can be very useful because intermittent operation may be discovered before parts or wiring is disturbed. Performing Active Tests early in troubleshooting is one way to save diagnostic time. Data List information can be displayed while performing Active Tests.

1. **PERFORM ACTIVE TEST**
   a. Warm up the engine.
   b. Turn the ignition switch off.
   c. Connect the Techstream to the DLC3.
   d. Turn the ignition switch to ON.
   e. Turn the Techstream on.
   f. Enter the following menus: Powertrain / ECT / Active Test.
   g. According to the display on the Techstream, perform the Active Test.

ECT

Tester Display	Test Part	Control Range	Diagnostic Note
Activate the Lock Up	Controls the shift solenoid SLU and SL to set the automatic transaxle to the lock-up condition.	ON/OFF	Can be used to check SLU and SL solenoid operation [Vehicle Condition] Vehicle speed: 60 km/h (37 mph) or more

HINT:

This test can be conducted when the vehicle speed is 60 km/h (37 mph) or more.

   h. Lightly depress the accelerator pedal and check that the engine speed does not change abruptly.

HINT:

- When changing the accelerator pedal opening angle while driving, if the engine speed does not change, lock-up is on.
- Slowly release, but not fully, the accelerator pedal in order to decelerate. (Fully releasing the

pedal will close the throttle valve and lock-up may be turned off.)

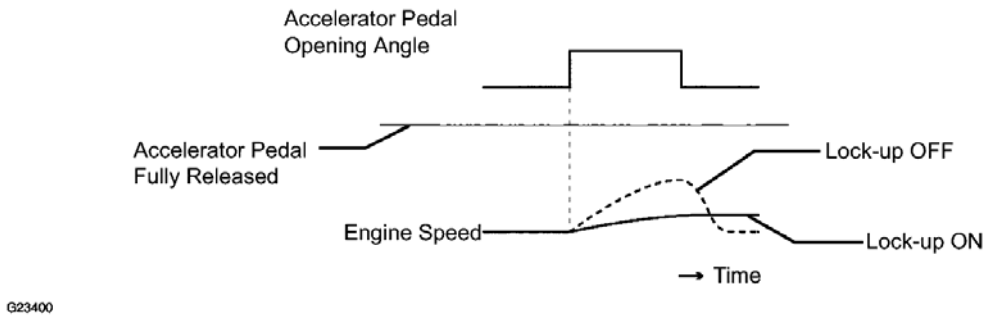

Fig. 28: Accelerator Pedal Opening Angle Graph
Courtesy of TOYOTA MOTOR SALES, U.S.A., INC.

PROCEDURE

1. **CHECK OTHER DTCS OUTPUT (IN ADDITION TO DTC P0741)**
   a. Connect the Techstream to the DLC3.
   b. Turn the ignition switch to ON.
   c. Turn the Techstream on.
   d. Enter the following menus: Powertrain / ECT / Trouble Codes.
   e. Read the DTCs using the Techstream.

   RESULT

Result	Proceed to
Only P0741 is output	A
P0741 and other DTCs output	B

   HINT:

   If any other codes besides P0741 are output, perform the troubleshooting for those DTCs first.

B --> See step 8

A: Go to next step

2. **INSPECT TRANSMISSION WIRE (SHIFT SOLENOID VALVE SL)**
   a. Remove the TCM from the transaxle.

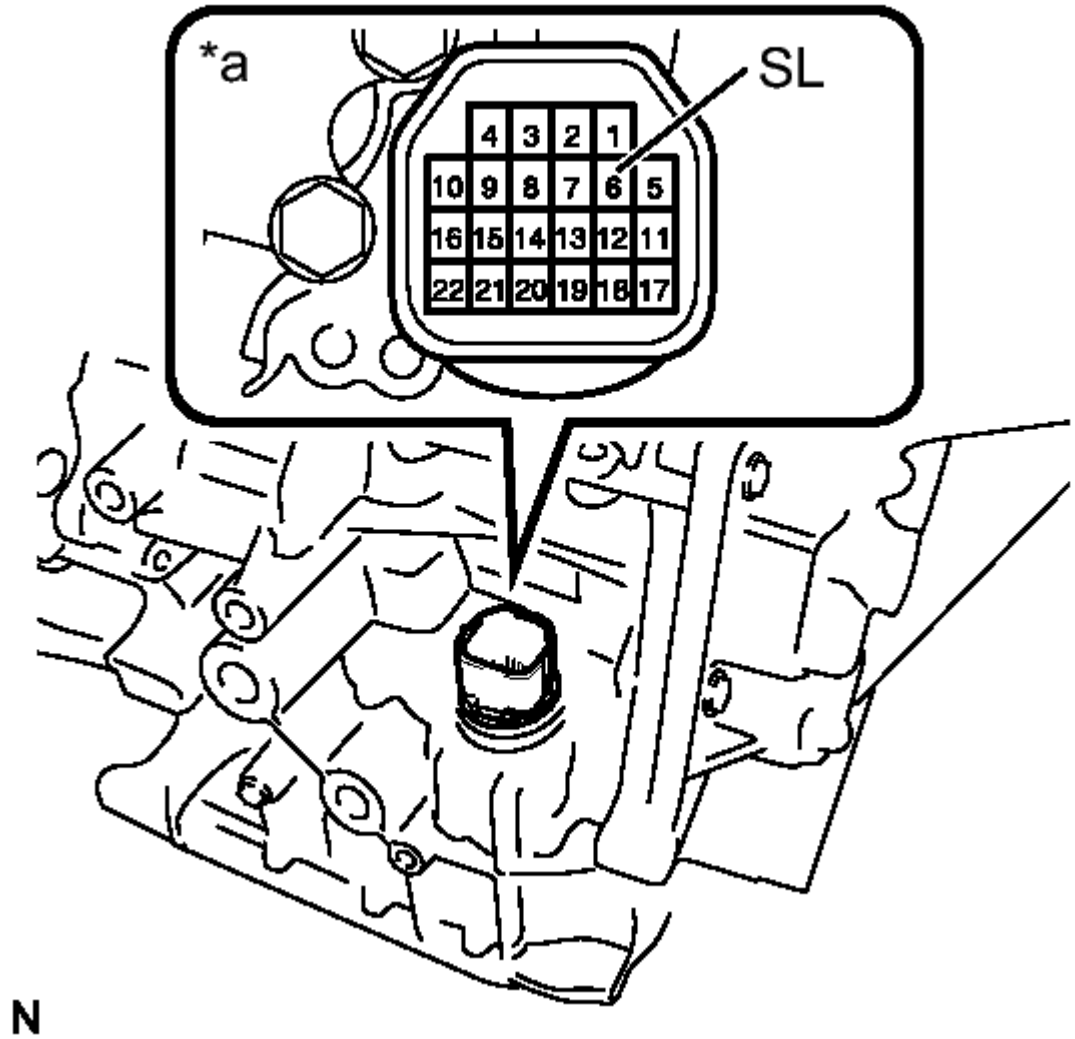

Fig. 29: Inspecting Transmission Wire (Shift Solenoid Valve SL)
Courtesy of TOYOTA MOTOR SALES, U.S.A., INC.

   b. Measure the resistance according to the value(s) in the table below.

   Standard Resistance

Tester Connection	Condition	Specified Condition
6 (SL) -	20°C (68°	11 to 15

Body ground	F)	ohms

TEXT IN ILLUSTRATION

*a	Component without harness connected: (Transmission Wire)

NG --> See step 6

OK: Go to next step

3. **INSPECT SHIFT SOLENOID VALVE SL (OPERATION)**
   a. Remove shift solenoid valve SL.

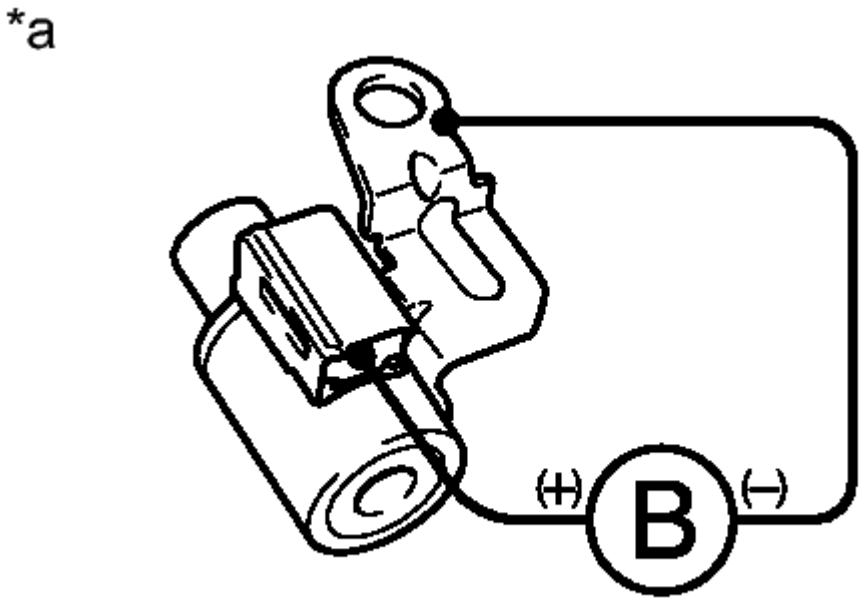

Fig. 30: Inspecting Shift Solenoid Valve SL (Operation)
Courtesy of TOYOTA MOTOR SALES, U.S.A., INC.

   b. Connect a battery positive (+) lead to the terminal of the solenoid valve connector, and a negative (-) lead to the solenoid body. Then check that the valve moves and makes an operating sound.

   OK

   Valve moves and makes an operating sound.

TEXT IN ILLUSTRATION

*a	Component without harness connected: (Shift Solenoid Valve SL)

NG --> See step 9

OK: Go to next step

4. **INSPECT TRANSMISSION VALVE BODY ASSEMBLY**
   a. Check the transmission valve body assembly. Refer to **REMOVAL** .

      OK

      There are no foreign objects on each valve and they operate smoothly.

NG --> See step 12

OK: Go to next step

5. **INSPECT TORQUE CONVERTER ASSEMBLY**
   a. Check the torque converter assembly. Refer to **INSPECTION** .

      OK

      The torque converter assembly operates normally.

NG --> See step 11

OK --> See step 7

6. **INSPECT SHIFT SOLENOID VALVE SL (RESISTANCE)**
   a. Remove shift solenoid valve SL.

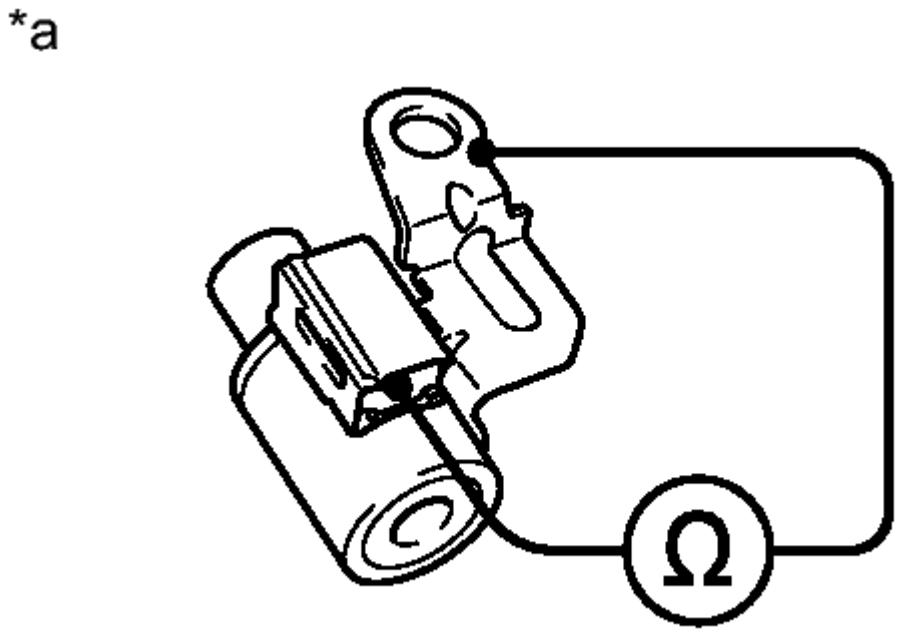

Fig. 31: Inspecting Shift Solenoid Valve SL (Resistance)
Courtesy of TOYOTA MOTOR SALES, U.S.A., INC.

b. Measure the resistance according to the value(s) in the table below.

Standard Resistance

Tester Connection	Condition	Specified Condition
1 - Solenoid Body	20°C (68°F)	11 to 15 ohms

TEXT IN ILLUSTRATION

*a	Component without harness connected: (Shift Solenoid Valve SL)

NG --> See step 9

OK --> See step 10

7. **REPLACE AUTOMATIC TRANSAXLE ASSEMBLY. Refer to REMOVAL**

8. **GO TO DTC CHART. Refer to DIAGNOSTIC TROUBLE CODE CHART**
9. **REPLACE SHIFT SOLENOID VALVE SL. Refer to REMOVAL**
10. **REPLACE TRANSMISSION WIRE. Refer to REMOVAL**
11. **REPLACE TORQUE CONVERTER ASSEMBLY. Refer to REMOVAL**
12. **REPAIR OR REPLACE TRANSMISSION VALVE BODY ASSEMBLY. Refer to REMOVAL**

DTC P0746: PRESSURE CONTROL SOLENOID "A" PERFORMANCE (SHIFT SOLENOID VALVE SL1)

DESCRIPTION

The TCM uses the vehicle speed signal and signals from the transmission speed sensors (NC, NT) to detect the actual gear (1st, 2nd, 3rd, 4th, 5th or 6th gear).

Then the TCM compares the actual gear with the shift schedule in the TCM memory to detect mechanical problems of the shift solenoid valves and valve body.

DTC No.	DTC Detection Condition	Trouble Area
P0746	The engine revs freely when 1st, 2nd, 3rd, or 4th gear is commanded (2 trip detection logic). When either of the following is detected twice (2 trip detection logic): • When 5th gear is commanded, 4th gear is engaged. • When 6th gear is commanded, 4th gear is engaged	• Shift solenoid valve SL1 remains open or closed • Valve body is blocked • Automatic transaxle (clutch, brake or gear etc.)

MONITOR DESCRIPTION

The TCM commands gear shifts by turning the shift solenoid valves on and off. According to the engine speed (NE), input speed (NT) and output speed (NC), the TCM detects the actual gear (1st, 2nd, 3rd, 4th, 5th or 6th gear). When the gear commanded by the TCM and the actual gear are not the same, the TCM will turn on the MIL and store the DTC.

MONITOR STRATEGY

Related DTCs	P0746: Shift solenoid valve SL1 OFF malfunction Shift solenoid valve SL1 ON malfunction
Required sensors/Components	Shift solenoid valve SL1, Input speed sensor (NT), Output speed sensor (NC), Crankshaft position sensor (NE)

Frequency of operation	Continuous
Duration	ON malfunction: 0.8 seconds OFF malfunction: 0.5 seconds
MIL operation	2 driving cycles
Sequence of operation	None

TYPICAL ENABLING CONDITIONS

ALL:

The monitor will run whenever this DTC is not present. (Not circuit malfunction)	P0712, P0713 (ATF temperature sensor circuit (TFT sensor)) P0115, P0117, P0118 (ECT sensor circuit) P0715, P0717 (Input speed sensor (NT) circuit) P0791, P0793 (Output speed sensor (NC) circuit) P0748 (Shift solenoid valve SL1 circuit) P0778 (Shift solenoid valve SL2 circuit) P0798 (Shift solenoid valve SL3 circuit) P2810 (Shift solenoid valve SL4 circuit) P0327, P0328, P0332, P0333 (KCS sensor circuit) P0120, P0121, P0122, P0123, P0220, P0222, P0223, P0604, P0606, P060A, P060B, P060D, P060E, P0657, P1607, P2102, P2103, P2111, P2112, P2118, P2119, P2135 ((ETCS) Electronic throttle control system) U0100 (CAN communication system)
Transmission range	D
TFT (Transmission fluid temperature)	-10°C (14°F) or more
TFT (Transmission fluid temperature) sensor circuit	No circuit malfunction
ECT (Engine coolant temperature) sensor circuit	No circuit malfunction
Input speed sensor (NT) circuit	No circuit malfunction
Output speed sensor (NC) circuit	No circuit malfunction
Shift solenoid valve SL1 circuit	No circuit malfunction
Shift solenoid valve SL2 circuit	No circuit malfunction
Shift solenoid valve SL3 circuit	No circuit malfunction
Shift solenoid valve SL4 circuit	No circuit malfunction
KCS (Knock control sensor circuit)	No circuit malfunction
(ETCS) Electronic throttle control system	Not system down
CAN communication system	Not system down
Engine	Starting

OFF MALFUNCTION:

TCM selected gear	1st, 2nd, 3rd or 4th
TCM indicated pressure value of SL1	1200 kPa
Throttle valve opening angle	3% or more

ON MALFUNCTION:

TCM selected gear	5th or 6th
Vehicle speed	2 km/h (1.2 mph) or more
Engine coolant temperature	40°C (104°F) or more
Throttle valve opening angle	4.5% or more at engine speed 2000 RPM (Varies with engine speed)

TYPICAL MALFUNCTION THRESHOLDS

Either of the following conditions is met:

OFF MALFUNCTION:

Input speed (NT) - Output speed (NC) x Gear ratio	1000 RPM or more

ON MALFUNCTION:

Input speed (NT) / Output speed (NC) when output speed less than 1000 RPM	0.998 to 1.138

INSPECTION PROCEDURE

NOTE: **Perform the universal trip to clear permanent DTCs. Refer to DTC CHECK / CLEAR .**

PROCEDURE

1. **CHECK OTHER DTCS OUTPUT (IN ADDITION TO DTC P0746)**
   a. Connect the Techstream to the DLC3.

b. Turn the ignition switch to ON.
c. Turn the Techstream on.
d. Enter the following menus: Powertrain / ECT / Trouble Codes.
e. Read the DTCs using the Techstream.

RESULT

Result	Proceed to
P0746 and other DTCs are output	A
Only P0746 is output	B

HINT:

If a solenoid is stuck OFF, DTCs for several solenoids including the malfunctioning solenoid will be detected.

B --> See step 3

A: Go to next step

2. **PERFORM ACTIVE TEST USING TECHSTREAM (CONTROL THE SHIFT POSITION)**

NOTE: This test should always be performed with at least 2 people.

a. Warm up the engine.
b. Turn the ignition switch off.
c. Connect the Techstream to the DLC3.
d. Turn the ignition switch to ON.
e. Turn the Techstream on.
f. Enter the following menus: Powertrain / ECT / Active Test.
g. According to the display on the Techstream, perform the Active Test.

HINT:

Comparing the gear commanded by the Active Test with the actual gear enables confirmation of the problem. Refer to **FAIL-SAFE CHART** .

ECT

Tester Display	Test Part	Control Range	Diagnostic Note
Control the Shift Position	Operates the shift solenoid valves to allow gears to selected manually.	• Press "-->" button: Upshift occurs • Press "<--" button: Downshift occurs	Can be used to check the operation of the shift solenoid valves.

NOTE:

- **This test can be conducted when the vehicle is stopped.**
- **When shifting gears using the Active Test function, do not operate the accelerator pedal for 2 seconds before and after shifting gears.**

HINT:

The gear commanded by the TCM is shown in the Data List / Shift Status display on the Techstream.

h. Check the vehicle speed and the gear when the engine speed is 1000 RPM.

HINT:

Because the torque converter clutch has not engaged, it may be difficult to obtain the speeds specified in 4th, 5th, and 6th gear, however a difference of speed should still be evident following each gear change.

Standard

1st	2nd	3rd	4th	5th	6th
8 to 12 km/h (5 to 7.5 mph)	15 to 19 km/h (9.3 to 11.8 mph)	21 to 25 km/h (13.0 to 15.5 mph)	31 to 35 km/h (19.3 to 21.7 mph)	44 to 48 km/h (27.3 to 29.8 mph)	52 to 56 km/h (32.3 to 34.8 mph)

i. Compare the TCM commanded gear and the actual gear.

RESULT

Actuator Gear	TCM Commanded Gear						

during Malfunction		1st	2nd	3rd	4th	5th	6th	Proceed to
Shift solenoid SL1	Stuck ON	1st	2nd	3rd	4th	4th	4th	A
	Stuck OFF	N*1	N*1	N*1	N*1	5th	6th	
Shift solenoid SL2	Stuck ON	4th	4th	4th	4th	5th	6th	B
	Stuck OFF	1st	2nd	3rd	1st	N*1	N*1	
Shift solenoid SL3	Stuck ON	2nd	2nd	3rd	4th	5th	6th	C
	Stuck OFF	1st	1st	3rd	4th	5th	N*1	
Shift solenoid SL4	Stuck ON*3	3rd	3rd	3rd	4th	5th	5th	D
	Stuck OFF	1st	2nd	1st	4th	N*1	6th	
Shift solenoid SLT	Stuck ON	N*2	N*2	N*2	N*2	N*2	N*2	E
	Stuck OFF*3	1st	2nd	3rd	4th	5th	6th	

HINT:

- *1: Neutral
- *2: If shift solenoid SLT is stuck on, the line pressure will be low. Therefore, the amount of torque that can be transmitted by each gear is lower than the normal limit. When the engine power exceeds this lowered limit, the engine speed will increase freely.
- *3: When shift solenoid SLT is stuck off, gear shifting is normal.

B --> See step 8

C --> See step 9

D --> See step 10

E --> See step 11

A: Go to next step

3. **INSPECT SHIFT SOLENOID VALVE SL1**
   a. Remove shift solenoid valve SL1.

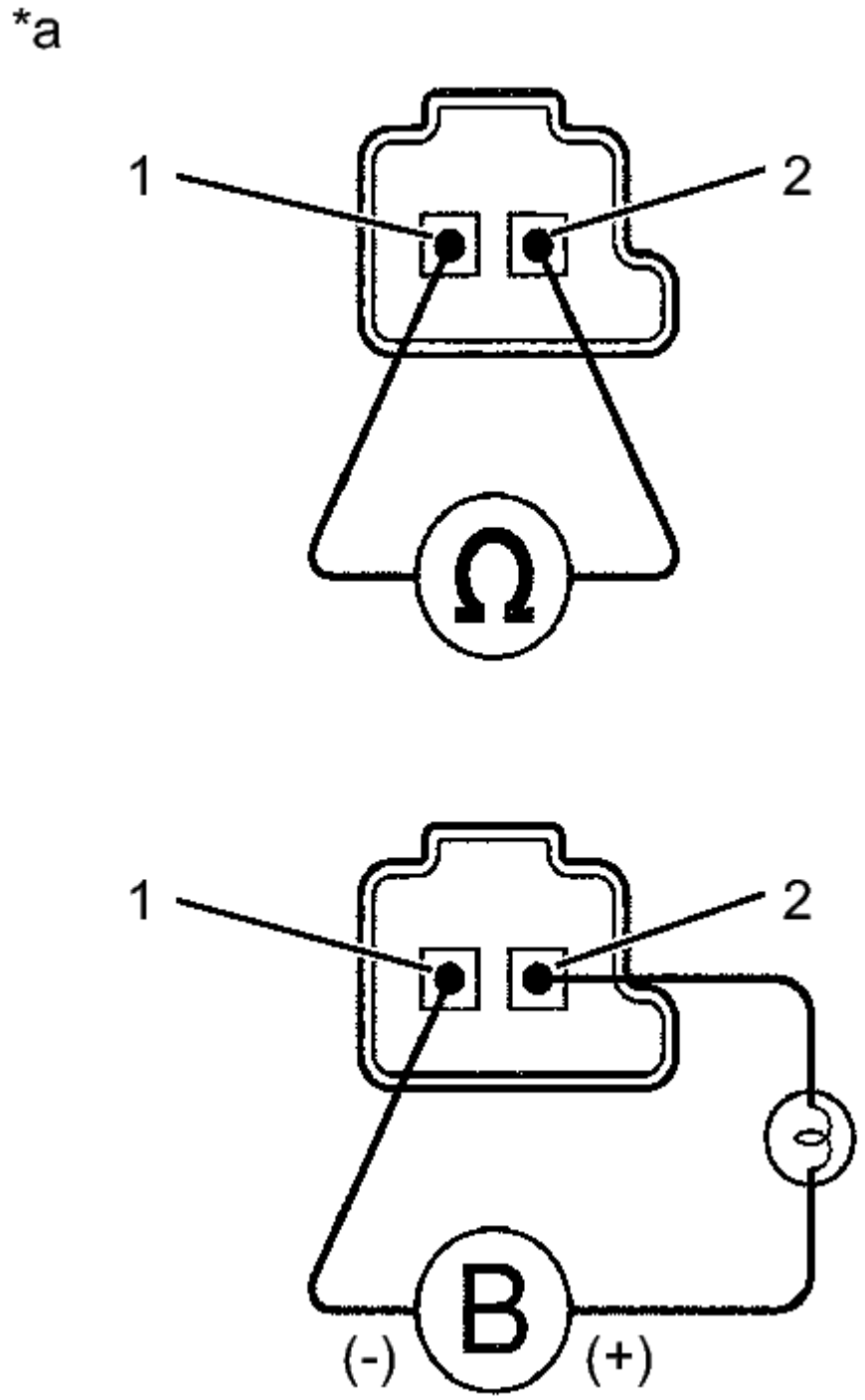

Fig. 32: Measuring Resistance Of Shift Solenoid Valve
Courtesy of TOYOTA MOTOR SALES, U.S.A., INC.

b. Measure the resistance according to the value(s) in the table below.

Standard Resistance

Tester Connection	Condition	Specified Condition
1 - 2	20°C (68° F)	5.0 to 5.6 ohms

TEXT IN ILLUSTRATION

*a	Component without harness connected: (Shift Solenoid Valve SL1)

c. Connect a battery positive (+) lead with a 21 W bulb to terminal 2 and a negative (-) lead to terminal 1 of the solenoid valve connector. Then check that the valve moves and makes an operating sound.

OK

Valve moves and makes an operating sound.

NG --> See step 6

OK: Go to next step

4. **INSPECT TRANSMISSION VALVE BODY ASSEMBLY**
   a. Check the transmission valve body assembly. Refer to **REMOVAL** .

OK

There are no foreign objects on each valve and they operate smoothly.

NG --> See step 7

OK --> See step 5

5. **REPLACE AUTOMATIC TRANSAXLE ASSEMBLY. Refer to REMOVAL**
6. **REPLACE SHIFT SOLENOID VALVE SL1. Refer to REMOVAL**
7. **REPAIR OR REPLACE TRANSMISSION VALVE BODY ASSEMBLY. Refer to REMOVAL**
8. **GO TO DTC CHART (RELATED SHIFT SOLENOID VALVE (SL2) PERFORMANCE DTC P0776). Refer to DTC P0776: Pressure Control Solenoid "B" Performance (Shift Solenoid Valve SL2)**

9. **GO TO DTC CHART (RELATED SHIFT SOLENOID VALVE (SL3) PERFORMANCE DTC P0796). Refer to DTC P0796: Pressure Control Solenoid "C" Performance (Shift Solenoid Valve SL3)**
10. **GO TO DTC CHART (RELATED SHIFT SOLENOID VALVE (SL4) PERFORMANCE DTC P2808). Refer to DTC P2808: Pressure Control Solenoid "G" Performance (Shift Solenoid Valve SL4)**
11. **GO TO DTC CHART (RELATED SHIFT SOLENOID VALVE (SLT) PERFORMANCE DTC P2714). Refer to DTC P2714: Pressure Control Solenoid "D" Performance (Shift Solenoid Valve SLT)**

DTC P0748: PRESSURE CONTROL SOLENOID "A" ELECTRICAL (SHIFT SOLENOID VALVE SL1)

DESCRIPTION

Changing from 1st to 6th is performed by the TCM turning shift solenoid valves SL1, SL2, SL3, SL4 and SL on and off. If an open or short circuit occurs in any of the shift solenoid valves, the TCM controls the remaining normal shift solenoid valves to allow the vehicle to be operated. Refer to **FAIL-SAFE CHART** .

DTC No.	DTC Detection Condition	Trouble Area
P0748	The TCM checks for an open or short in the shift solenoid valve SL1 circuit while driving and shifting between 4th and 5th gears. (1 trip detection logic) • Output signal duty equals 100%. (NOTE: SL1 output signal duty is less than 100% under normal condition.)	• Open or short in shift solenoid valve SL1 circuit • Shift solenoid valve SL1 • Transmission wire • TCM

MONITOR DESCRIPTION

This DTC indicates an open or short in the shift solenoid valve SL1 circuit. The TCM commands gear shifts by turning the shift solenoid valves on or off. When there is an open or short circuit in any shift solenoid valve circuit, the TCM detects the problem and illuminates the MIL and stores the DTC. The TCM also performs the fail-safe function and turns the other normal shift solenoid valves on or off. (In case of an open or short circuit, the TCM stops sending current to the circuit.)

While driving and shifting between 4th and 5th gears, if the TCM detects an open or short in the shift solenoid valve SL1 circuit, the TCM determines there is a malfunction. Refer to **FAIL-SAFE CHART** .

MONITOR STRATEGY

Related DTCs	P0748: Shift solenoid valve SL1/Range check

Required sensors/Components	Shift solenoid valve SL1
Frequency of operation	Continuous
Duration	1 second
MIL operation	Immediately
Sequence of operation	None

TYPICAL ENABLING CONDITIONS

ALL

The monitor will run whenever the following DTCs are not present	None
Ignition switch	ON
Starter	OFF

CONDITION (A)

Battery voltage	12 V or more

CONDITION (B)

Battery voltage	10 V or more and less than 12 V
CPU commanded duty	Less than 75%

TYPICAL MALFUNCTION THRESHOLDS

ALL

Output signal duty	100% or more

COMPONENT OPERATING RANGE

Output signal duty	More than 3% and less than 100%

WIRING DIAGRAM

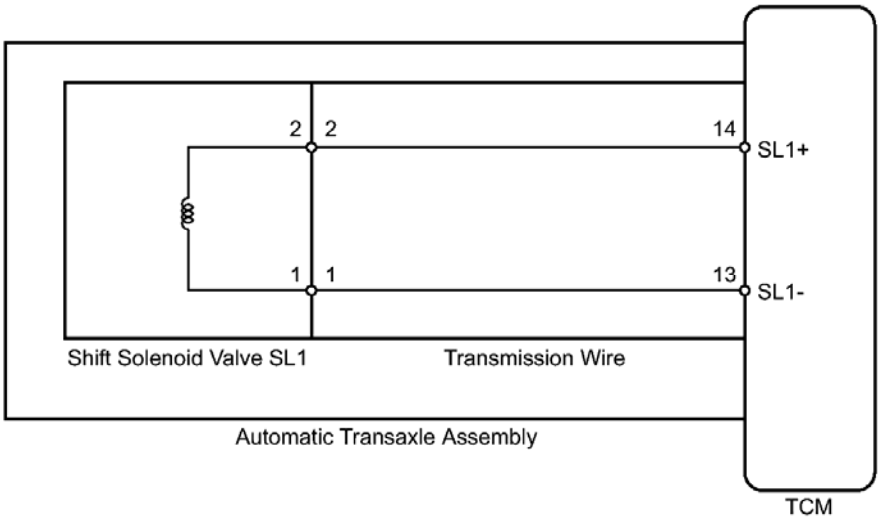

Fig. 33: Shift Solenoid Valve SL1 Circuit - Wiring Diagram
Courtesy of TOYOTA MOTOR SALES, U.S.A., INC.

INSPECTION PROCEDURE

NOTE: **Perform the universal trip to clear permanent DTCs. Refer to DTC CHECK / CLEAR .**

HINT:

The following table shows normal operation of the shift solenoid valve SL1 when the shift lever is in D:

TCM commanded gear	1st	2nd	3rd	4th	5th	6th
Shift solenoid valve SL1	ON	ON	ON	ON	OFF	OFF

PROCEDURE

1. **INSPECT TRANSMISSION WIRE (SHIFT SOLENOID VALVE SL1)**
   a. Remove the TCM from the transaxle.

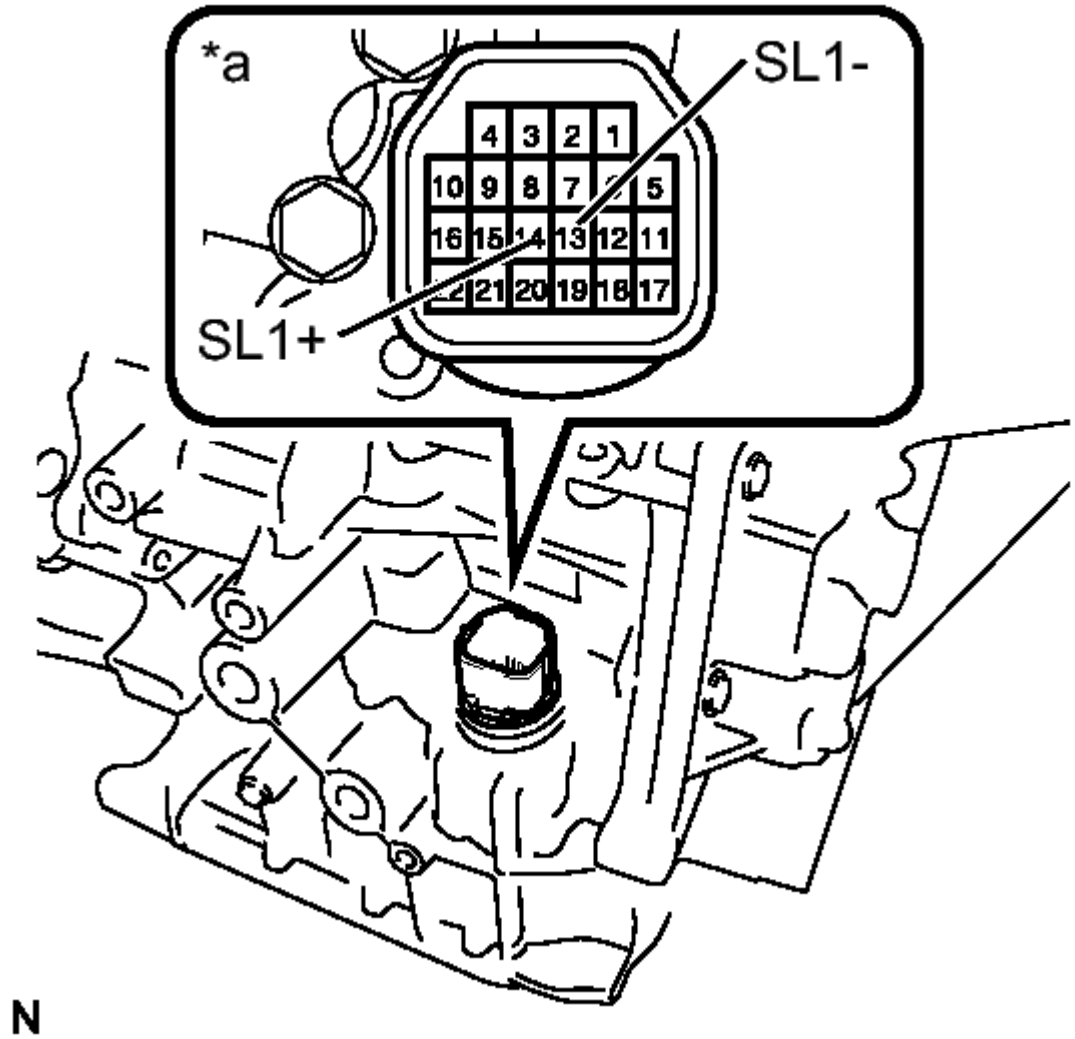

Fig. 34: Inspecting Transmission Wire (Shift Solenoid Valve SL1)
Courtesy of TOYOTA MOTOR SALES, U.S.A., INC.

b. Measure the resistance according to the value(s) in the table below.

Standard Resistance

Tester Connection	Condition	Specified Condition
14 (SL1+) - 13 (SL1-)	20°C (68° F)	5.0 to 5.6 ohms
14 (SL1+) - Body ground	Always	10 kohms or higher
13 (SL1-) - Body	Always	10 kohms

ground		or higher
14 (SL1+) - All other terminals except 13 (SL1-)	Always	10 kohms or higher
13 (SL1-) - All other terminals except 14 (SL1+)	Always	10 kohms or higher

TEXT IN ILLUSTRATION

*a	Component without harness connected: (Transmission Wire)

NG --> See step 2

OK --> See step 3

2. **INSPECT SHIFT SOLENOID VALVE SL1**
   a. Remove shift solenoid valve SL1.

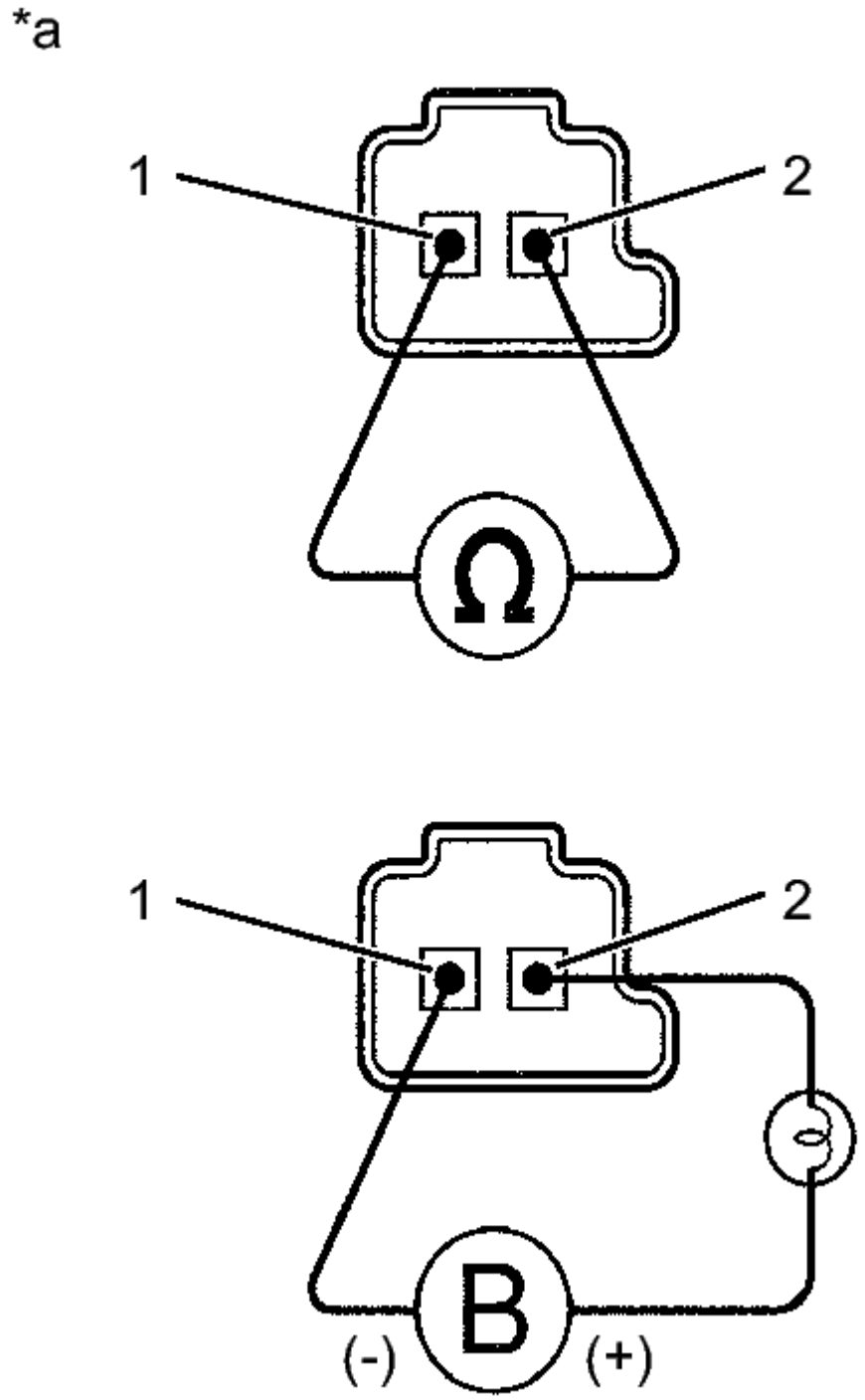

Fig. 35: Measuring Resistance Of Shift Solenoid Valve
Courtesy of TOYOTA MOTOR SALES, U.S.A., INC.

b. Measure the resistance according to the value(s) in the table below.

Standard Resistance

Tester Connection	Condition	Specified Condition
1 - 2	20°C (68° F)	5.0 to 5.6 ohms

TEXT IN ILLUSTRATION

*a	Component without harness connected: (Shift Solenoid Valve SL1)

c. Connect a battery positive (+) lead with a 21 W bulb to terminal 2 and a negative (-) lead to terminal 1 of the solenoid valve connector. Then check that the valve moves and makes an operating sound.

OK

Valve moves and makes an operating sound.

NG --> See step 4

OK --> See step 5

3. **REPLACE TCM. Refer to REMOVAL**
4. **REPLACE SHIFT SOLENOID VALVE SL1. Refer to REMOVAL**
5. **REPLACE TRANSMISSION WIRE. Refer to REMOVAL**

DTC P0776: PRESSURE CONTROL SOLENOID "B" PERFORMANCE (SHIFT SOLENOID VALVE SL2)

DESCRIPTION

The TCM uses the vehicle speed signal and signals from the transmission speed sensors (NC, NT) to detect the actual gear (1st, 2nd, 3rd, 4th, 5th or 6th gear).

Then the TCM compares the actual gear with the shift schedule in the TCM memory to detect mechanical problems of the shift solenoid valves and valve body.

DTC No.	DTC Detection Condition	Trouble Area
	The engine revs freely when 4th, 5th, or 6th gear is commanded (2-trip detection logic).	

P0776	When any of the following is detected twice (2 trip detection logic): • When 1st gear is commanded, 4th gear is engaged. • When 2nd gear is commanded, 4th gear is engaged. • When 3rd gear is commanded, 4th gear is engaged.	• Shift solenoid valve SL2 remains open or closed • Valve body is blocked • Automatic transaxle (clutch, brake or gear etc.)

MONITOR DESCRIPTION

The TCM commands gear shifts by turning the shift solenoid valves on and off. According to the engine speed (NE), input speed (NT)) and output speed (NC), the TCM detects the actual gear (1st, 2nd, 3rd, 4th, 5th or 6th gear). When the gear commanded by the TCM and the actual gear are not the same. The TCM will turn on the MIL and store the DTC.

MONITOR STRATEGY

Related DTCs	P0776: Shift solenoid valve SL2/OFF malfunction Shift solenoid valve SL2/ON malfunction
Required sensors/Components	Shift solenoid valve SL2, Input speed sensor (NT), Output speed sensor (NC), Crankshaft position sensor (NE)
Frequency of operation	Continuous
Duration	OFF malfunction 0.5 seconds ON malfunction 0.8 seconds
MIL operation	2 driving cycles
Sequence of operation	None

TYPICAL ENABLING CONDITIONS

ALL:

The monitor will run whenever this DTC is not	P0712, P0713 (ATF temperature sensor circuit (TFT sensor)) P0115, P0117, P0118 (ECT sensor circuit) P0715, P0717 (Input speed sensor (NT) circuit) P0791, P0793 (Output speed sensor (NC) circuit) P0748 (Shift solenoid valve SL1 circuit) P0778 (Shift solenoid valve SL2 circuit) P0798 (Shift solenoid valve SL3 circuit)

present. (Not circuit malfunction)	P2810 (Shift solenoid valve SL4 circuit) P0327, P0328, P0332, P0333 (KCS sensor circuit) P0120, P0121, P0122, P0123, P0220, P0222, P0223, P0604, P0606, P060A, P060B, P060D, P060E, P0657, P1607, P2102, P2103, P2111, P2112, P2118, P2119, P2135 ((ETCS) Electronic throttle control system) U0100 (CAN communication system)
Transmission range	D
TFT (Transmission fluid temperature)	-10°C (14°F) or more
TFT (Transmission fluid temperature) sensor circuit	No circuit malfunction
ECT (Engine coolant temperature) sensor circuit	No circuit malfunction
Input speed sensor (NT) circuit	No circuit malfunction
Output speed sensor (NC) circuit	No circuit malfunction
Shift solenoid valve SL1 circuit	No circuit malfunction
Shift solenoid valve SL2 circuit	No circuit malfunction
Shift solenoid valve SL3 circuit	No circuit malfunction
Shift solenoid valve SL4 circuit	No circuit malfunction
KCS (Knock control sensor circuit)	No circuit malfunction
(ETCS) Electronic throttle control system	Not system down
CAN communication system	Not system down
Engine	Starting

OFF MALFUNCTION:

TCM selected gear	4th, 5th or 6th
TCM indicated pressure value of SL2	1200 kPa
Throttle valve opening angle	3% or more

ON MALFUNCTION (A):

TCM selected gear	1st
Vehicle speed	2 to 40 km/h (1.2 to 24.9 mph)
Engine coolant temperature	40°C (104°F) or more
Engine speed (NE) - Input speed (NT)	50 RPM or more

ON MALFUNCTION (B):

TCM selected gear	2nd
Throttle valve opening angle	4.5% or more at engine speed 2000 RPM (Varies with engine speed)
Vehicle speed	2 km/h (1.2 mph) or more
Engine coolant temperature	40°C (104°F) or more

ON MALFUNCTION (C):

TCM selected gear	3rd
Throttle valve opening angle	4.5% or more at engine speed 2000 RPM (Varies with engine speed)
Vehicle speed	2 km/h (1.2 mph) or more
Engine coolant temperature	40°C (104°F) or more

TYPICAL MALFUNCTION THRESHOLDS

OFF MALFUNCTION:

Input speed (NT) - Output speed (NC) x Gear ratio	1000 RPM or more

ON MALFUNCTION:

Input speed (NT) / Output speed (NC) when output speed less than 1000 RPM	0.998 to 1.138

INSPECTION PROCEDURE

NOTE: **Perform the universal trip to clear permanent DTCs. Refer to DTC CHECK / CLEAR .**

PROCEDURE

1. **CHECK OTHER DTCS OUTPUT (IN ADDITION TO DTC P0776)**
   a. Connect the Techstream to the DLC3.
   b. Turn the ignition switch to ON.
   c. Turn the Techstream on.
   d. Enter the following menus: Powertrain / ECT / Trouble Codes.
   e. Read the DTCs using the Techstream.

RESULT

Result	Proceed to
P0776 and other DTCs are output	A
Only P0776 is output	B

HINT:

If a solenoid is stuck OFF, DTCs for several solenoids including the malfunctioning solenoid will be detected.

B --> See step 3

A: Go to next step

2. **PERFORM ACTIVE TEST USING TECHSTREAM (CONTROL THE SHIFT POSITION)**

NOTE: This test should always be performed with at least 2 people.

a. Warm up the engine.
b. Turn the ignition switch off.
c. Connect the Techstream to the DLC3.
d. Turn the ignition switch to ON.
e. Turn the Techstream on.
f. Enter the following menus: Powertrain / ECT / Active Test.
g. According to the display on the Techstream, perform the Active Test.

HINT:

Comparing the gear commanded by the Active Test with the actual gear enables confirmation of the problem. Refer to **FAIL-SAFE CHART** .

ECT

Tester Display	Test Part	Control Range	Diagnostic Note
Control the Shift Position	Operates the shift solenoid valves to allow gears to selected manually.	• Press "-->" button: Upshift occurs • Press "<--" button: Downshift occurs	Can be used to check the operation of the shift solenoid valves.

NOTE:

- **This test can be conducted when the vehicle is stopped.**
- **When shifting gears using the Active Test function, do not operate the accelerator pedal for 2 seconds before and after shifting gears.**

HINT:

The gear commanded by the TCM is shown in the Data List / Shift Status display on the Techstream.

h. Check the vehicle speed and the gear when the engine speed is 1000 RPM.

HINT:

Because the torque converter clutch has not engaged, it may be difficult to obtain the speeds specified in 4th, 5th, and 6th gear, however a difference of speed should still be evident following each gear change.

Standard

1st	2nd	3rd	4th	5th	6th
8 to 12 km/h (5 to 7.5 mph)	15 to 19 km/h (9.3 to 11.8 mph)	21 to 25 km/h (13.0 to 15.5 mph)	31 to 35 km/h (19.3 to 21.7 mph)	44 to 48 km/h (27.3 to 29.8 mph)	52 to 56 km/h (32.3 to 34.8 mph)

i. Compare the TCM commanded gear and the actual gear.

RESULT

Actuator Gear during Malfunction		TCM Commanded Gear						Proceed to
		1st	2nd	3rd	4th	5th	6th	
Shift solenoid SL1	Stuck ON	1st	2nd	3rd	4th	4th	4th	A
	Stuck OFF	N*1	N*1	N*1	N*1	5th	6th	
Shift solenoid SL2	Stuck ON	4th	4th	4th	4th	5th	6th	B
	Stuck OFF	1st	2nd	3rd	1st	N*1	N*1	
Shift solenoid SL3	Stuck ON	2nd	2nd	3rd	4th	5th	6th	C
	Stuck OFF	1st	1st	3rd	4th	5th	N*1	
Shift solenoid SL4	Stuck ON*3	3rd	3rd	3rd	4th	5th	5th	D
	Stuck OFF	1st	2nd	1st	4th	N*1	6th	
Shift solenoid SLT	Stuck ON	N*2	N*2	N*2	N*2	N*2	N*2	E
	Stuck OFF*3	1st	2nd	3rd	4th	5th	6th	

HINT:

- *1: Neutral

- *2: If shift solenoid SLT is stuck on, the line pressure will be low. Therefore, the amount of torque that can be transmitted by each gear is lower than the normal limit. When the engine power exceeds this lowered limit, the engine speed will increase freely.
- *3: When shift solenoid SLT is stuck off, gear shifting is normal.

A --> See step 8

C --> See step 9

D --> See step 10

E --> See step 11

B: Go to next step

3. **INSPECT SHIFT SOLENOID VALVE SL2**
   a. Remove shift solenoid valve SL2.

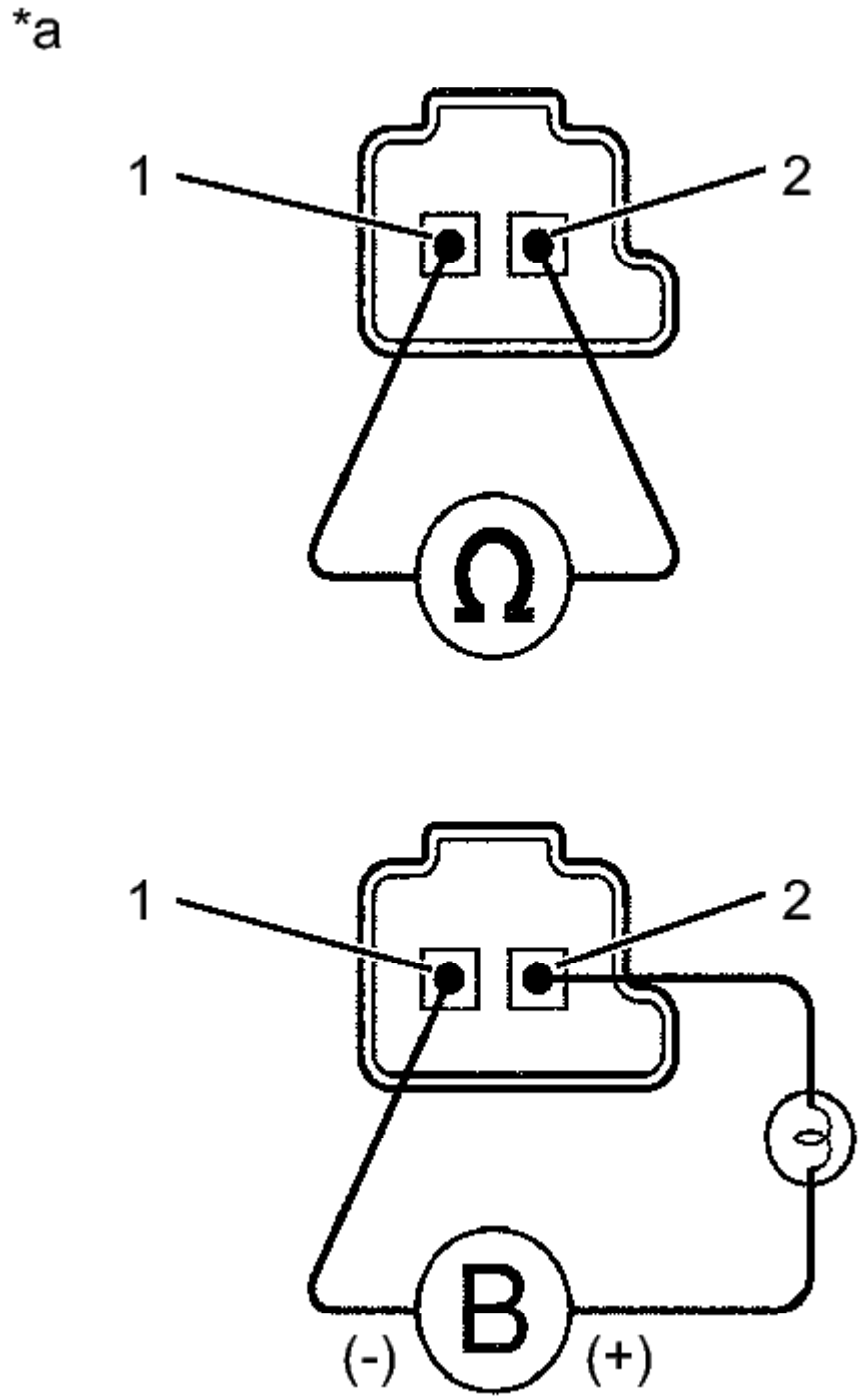

Fig. 36: Measuring Resistance Of Shift Solenoid Valve
Courtesy of TOYOTA MOTOR SALES, U.S.A., INC.

b. Measure the resistance according to the value(s) in the table below.

Standard Resistance

Tester Connection	Condition	Specified Condition
1 - 2	20°C (68° F)	5.0 to 5.6 ohms

TEXT IN ILLUSTRATION

*a	Component without harness connected: (Shift Solenoid Valve SL2)

c. Connect a battery positive (+) lead with a 21 W bulb to terminal 2 and a negative (-) lead to terminal 1 of the solenoid valve connector. Then check that the valve moves and makes an operating sound.

OK

Valve moves and makes an operating sound.

NG --> See step 6

OK: Go to next step

4. **INSPECT TRANSMISSION VALVE BODY ASSEMBLY**
   a. Check the transmission valve body assembly. Refer to **REMOVAL** .

OK

There are no foreign objects on each valve and they operate smoothly.

NG --> See step 7

OK --> See step 5

5. **REPLACE AUTOMATIC TRANSAXLE ASSEMBLY. Refer to REMOVAL**
6. **REPLACE SHIFT SOLENOID VALVE SL2. Refer to REMOVAL**
7. **REPAIR OR REPLACE TRANSMISSION VALVE BODY ASSEMBLY. Refer to REMOVAL**
8. **GO TO DTC CHART (RELATED SHIFT SOLENOID VALVE (SL1) PERFORMANCE DTC P0746). Refer to DTC P0746: Pressure Control Solenoid "A" Performance (Shift Solenoid Valve SL1)**

9. **GO TO DTC CHART (RELATED SHIFT SOLENOID VALVE (SL3) PERFORMANCE DTC P0796). Refer to DTC P0796: Pressure Control Solenoid "C" Performance (Shift Solenoid Valve SL3)**
10. **GO TO DTC CHART (RELATED SHIFT SOLENOID VALVE (SL4) PERFORMANCE DTC P2808). Refer to DTC P2808: Pressure Control Solenoid "G" Performance (Shift Solenoid Valve SL4)**
11. **GO TO DTC CHART (RELATED SHIFT SOLENOID VALVE (SLT) PERFORMANCE DTC P2714). Refer to DTC P2714: Pressure Control Solenoid "D" Performance (Shift Solenoid Valve SLT)**

DTC P0778: PRESSURE CONTROL SOLENOID "B" ELECTRICAL (SHIFT SOLENOID VALVE SL2)

DESCRIPTION

Changing from 1st to 6th is performed by the TCM turning shift solenoid valves SL1, SL2, SL3, SL4 and SL on and off. If an open or short circuit occurs in any of the shift solenoid valves, the TCM controls the remaining normal shift solenoid valves to allow the vehicle to be operated. Refer to **FAIL-SAFE CHART** .

DTC No.	DTC Detection Condition	Trouble Area
P0778	The TCM checks for an open or short in the shift solenoid valve SL2 circuit while driving and shifting gears. (1 trip detection logic) • Output signal duty equals to 100%. (NOTE: SL2 output signal duty is less than 100% under normal condition.)	• Open or short in shift solenoid valve SL2 circuit • Shift solenoid valve SL2 • Transmission wire • TCM

MONITOR DESCRIPTION

This DTC indicates an open or short in the shift solenoid valve SL2 circuit. The TCM commands gear shifts by turning the shift solenoid valves on or off. When there is an open or short circuit in any of the shift solenoid valve circuits, the TCM detects the problem and illuminates the MIL and stores the DTC. The TCM also performs the fail-safe function and turns the other normal shift solenoid valves on or off. (In case of an open or short circuit, the TCM stops sending current to the circuit.)

While driving and shifting gears, if the TCM detects an open or short in the shift solenoid valve SL2 circuit, the TCM determines there is a malfunction. Refer to **FAIL-SAFE CHART** .

MONITOR STRATEGY

Related DTCs	P0778: Shift solenoid valve SL2/Range

	check
Required sensors/Components	Shift solenoid valve SL2
Frequency of operation	Continuous
Duration	1 second
MIL operation	Immediately
Sequence of operation	None

TYPICAL ENABLING CONDITIONS

ALL

The monitor will run whenever the following DTCs are not present	None
Ignition switch	ON
Starter	OFF

CONDITION (A)

Battery voltage	12 V or more

CONDITION (B)

Battery voltage	10 V or more and less than 12 V
CPU commanded duty	Less than 75%

TYPICAL MALFUNCTION THRESHOLDS

ALL

Output signal duty	100% or more

COMPONENT OPERATING RANGE

Output signal duty	More than 3% and less than 100%

WIRING DIAGRAM

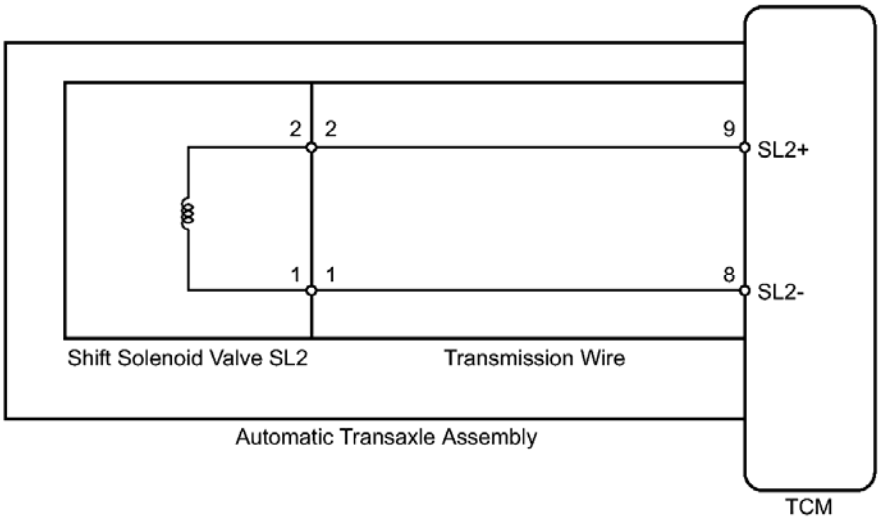

Fig. 37: Shift Solenoid Valve SL2 Circuit - Wiring Diagram
Courtesy of TOYOTA MOTOR SALES, U.S.A., INC.

INSPECTION PROCEDURE

NOTE: **Perform the universal trip to clear permanent DTCs. Refer to DTC CHECK / CLEAR .**

HINT:

The following table shows normal operation of the shift solenoid valve SL2 when the shift lever is in D:

TCM commanded gear	1st	2nd	3rd	4th	5th	6th
Shift solenoid valve SL2	OFF	OFF	OFF	ON	ON	ON

PROCEDURE

1. **INSPECT TRANSMISSION WIRE (SHIFT SOLENOID VALVE SL2)**
   a. Remove the TCM from the transaxle.

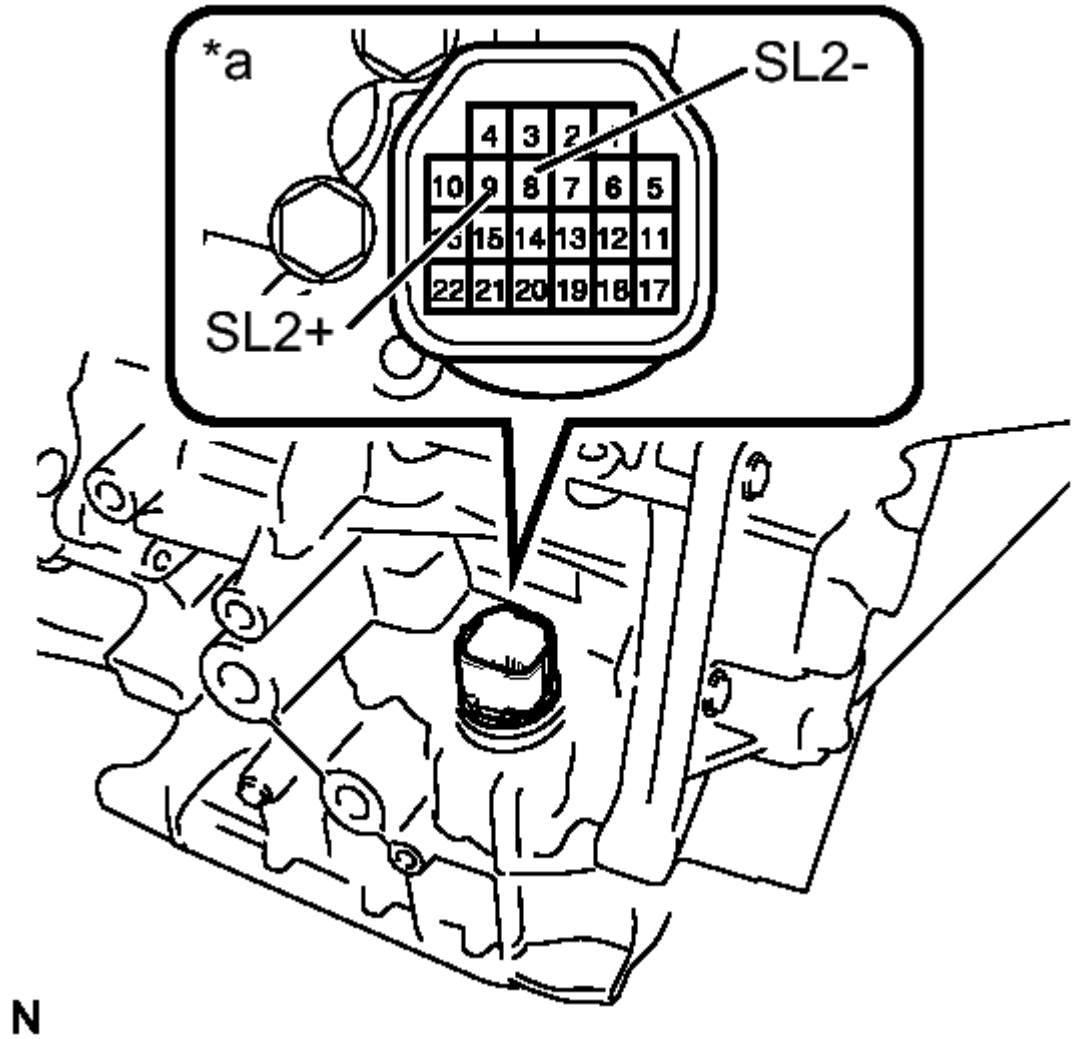

Fig. 38: Inspecting Transmission Wire (Shift Solenoid Valve SL2)
Courtesy of TOYOTA MOTOR SALES, U.S.A., INC.

b. Measure the resistance according to the value(s) in the table below.

Standard Resistance

Tester Connection	Condition	Specified Condition
9 (SL2+) - 8 (SL2-)	20°C (68° F)	5.0 to 5.6 ohms
9 (SL2+) - Body ground	Always	10 kohms or higher
8 (SL2-) - Body	Always	10 kohms

ground		or higher
9 (SL2+) - All other terminals except 8 (SL2-)	Always	10 kohms or higher
8 (SL2-) - All other terminals except 9 (SL2+)	Always	10 kohms or higher

TEXT IN ILLUSTRATION

*a	Component without harness connected: (Transmission Wire)

NG --> See step 2

OK --> See step 4

2. **INSPECT SHIFT SOLENOID VALVE SL2**
   a. Remove shift solenoid valve SL2.

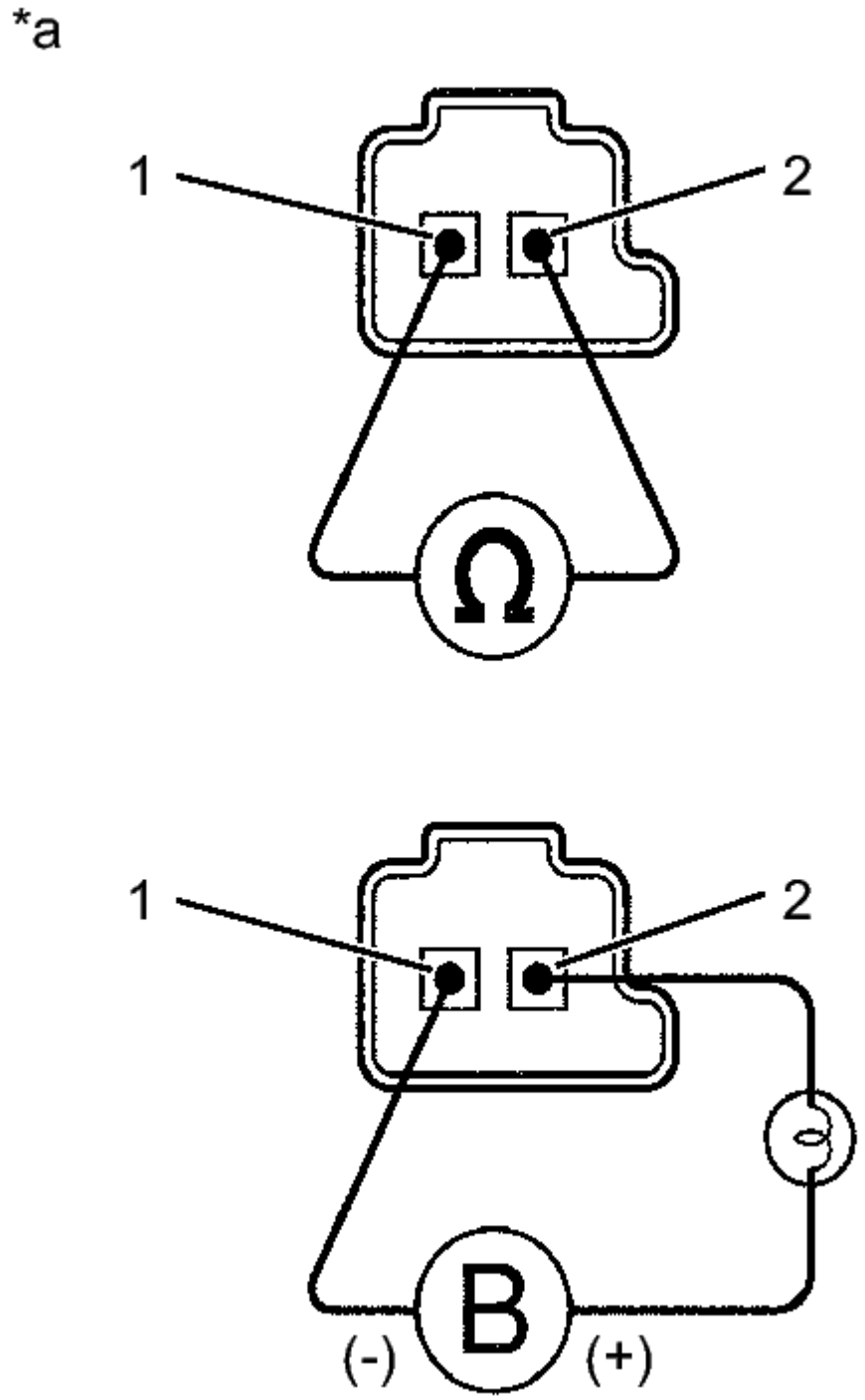

Fig. 39: Measuring Resistance Of Shift Solenoid Valve
Courtesy of TOYOTA MOTOR SALES, U.S.A., INC.

b. Measure the resistance according to the value(s) in the table below.

Standard Resistance

Tester Connection	Condition	Specified Condition
1 - 2	20°C (68° F)	5.0 to 5.6 ohms

TEXT IN ILLUSTRATION

*a	Component without harness connected: (Shift Solenoid Valve SL2)

c. Connect a battery positive (+) lead with a 21 W bulb to terminal 2 and a negative (-) lead to terminal 1 of the solenoid valve connector. Then check that the valve moves and makes an operating sound.

OK

Valve moves and makes an operating sound.

NG --> See step 5

OK --> See step 3

3. **REPLACE TRANSMISSION WIRE. Refer to REMOVAL**
4. **REPLACE TCM. Refer to REMOVAL**
5. **REPLACE SHIFT SOLENOID VALVE SL2. Refer to REMOVAL**

DTC P0791: INTERMEDIATE SHAFT SPEED SENSOR "A" CIRCUIT; DTC P0793: INTERMEDIATE SHAFT SPEED SENSOR "A"

DESCRIPTION

This sensor detects the rotation speed of the counter gear which shows the output speed of transaxle. By comparing the input speed signal (NT) with the output speed sensor signal (NC), the TCM detects the shift timing of the gears and appropriately controls the engine torque and hydraulic pressure according to various conditions, thus, providing smooth gear shifts.

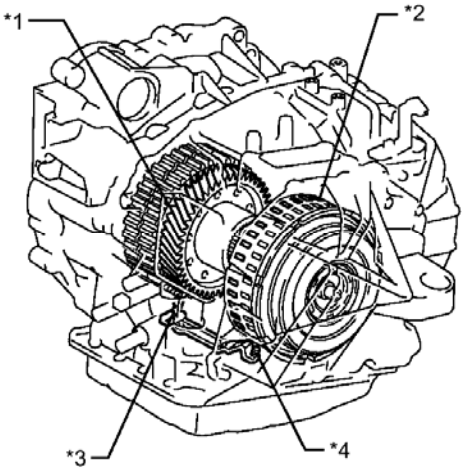

N

Fig. 40: Identifying Counter Gear, Clutch Drum, Input Speed Sensor And Output Speed Sensor
Courtesy of TOYOTA MOTOR SALES, U.S.A., INC.

TEXT IN ILLUSTRATION

*1	Counter Gear	*2	Clutch Drum
*3	Output Speed Sensor (NC)	*4	Input Speed Sensor (NT)

DTC No.	DTC Detection Condition	Trouble Area
P0791	When the speed sensor input voltage is either more than 1.9 V or less than 0.1 V for 2 seconds or more. (1 trip detection logic)	• Transmission revolution sensor (output speed sensor NC) • Transmission wire • TCM
P0793	When the vehicle speed is 25 km/h (15.54 mph) or higher, the counter gear speed is less than 300 RPM for 2 seconds or more. (1 trip detection logic)	

MONITOR DESCRIPTION

The NT terminal of the TCM detects a revolution signal from the input speed sensor (NT). The TCM calculates gear shifts by comparing the input speed sensor (NT) with the output speed sensor (NC).

While the vehicle is operating in 2nd, 3rd, 4th, 5th or 6th gear with the shift lever in D, if the input shaft

revolution is less than 300 rpm*1 although the output shaft revolution is more than 1000 RPM, the TCM interprets this as a fault, illuminates the MIL and stores the DTC.

*1: Pulse is not output or is irregularly output.

MONITOR STRATEGY

Related DTCs	P0791: Output speed sensor (NC)/Range check P0793: Output speed sensor (NC)/Verify pulse input
Required sensors/Components	Input speed sensor (NT), Output speed sensor (NC)
Frequency of operation	Continuous
Duration	2 seconds
MIL operation	Immediately
Sequence of operation	None

TYPICAL ENABLING CONDITIONS

P0791

Vehicle speed	25 km/h (15.54 mph) or more
Battery voltage	8 V or more
Ignition switch	ON
Starter	OFF
Intermediate shaft speed sensor (speed sensor (NC)) pulse input fail (P0793)	Not detected

P0793

The monitor will run whenever this DTC is not present.	None
Vehicle speed	25 km/h (15.54 mph) or more
Battery voltage	8 V or more
Ignition switch	ON
Starter	OFF
Intermediate shaft speed sensor (speed sensor (NC)) range check fail (P0791)	Not detected

TYPICAL MALFUNCTION THRESHOLDS

P0791:

Sensor voltage	Less than 0.1 V, or more than 1.9 V

P0793:

Sensor signal speed	Less than 300 RPM

WIRING DIAGRAM

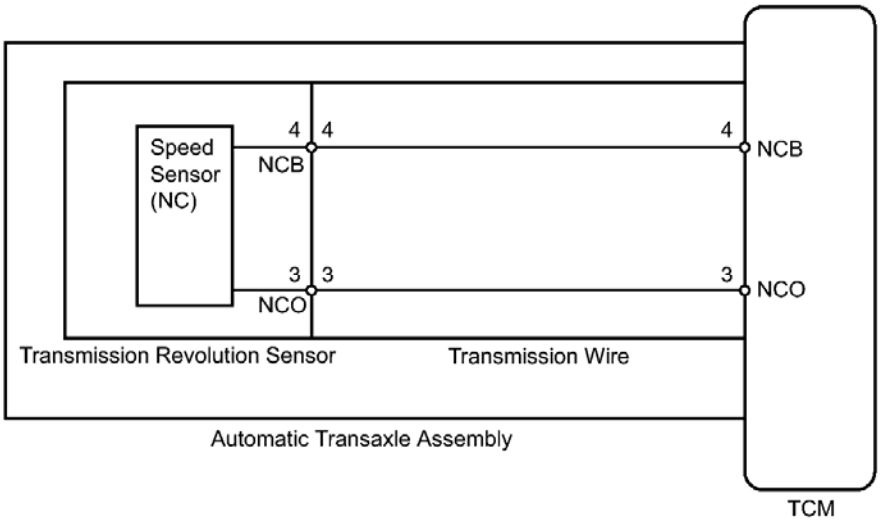

Fig. 41: Intermediate Shaft Speed Sensor Circuit - Wiring Diagram
Courtesy of TOYOTA MOTOR SALES, U.S.A., INC.

INSPECTION PROCEDURE

NOTE: **Perform the universal trip to clear permanent DTCs. Refer to DTC CHECK / CLEAR .**

1. **DATA LIST**

   HINT:

   Using the Techstream to read the Data List allows the values or states of switches, sensors, actuators and other items to be read without removing any parts. This non-intrusive inspection can be very useful because intermittent conditions or signals may be discovered before parts or wiring is disturbed. Reading the Data List information early in troubleshooting is one way to save diagnostic time.

   NOTE: **In the table below, the values listed under "Normal Condition" are reference values. Do not depend solely on these reference values when deciding whether a part is faulty or not.**

   a. Warm up the engine.
   b. Turn the ignition switch off.
   c. Connect the Techstream to the DLC3.
   d. Turn the ignition switch to ON.
   e. Turn the Techstream on.
   f. Enter the following menus: Powertrain / ECT / Data List / All Data.

g. According to the display on the Techstream, read the Data List.

ECT

Tester Display	Measurement Item/Range	Normal Condition	Diagnostic Note
SPD (NC)	Counter Gear Speed/ Min.: 0 RPM, Max.: 12750 RPM	-	-

HINT:

- SPD (NC) is always 0 while driving: Open or short in the sensor or circuit.
- SPD (NC) is always more than 0 and less than 300 RPM while driving the vehicle at 50 km/h (31 mph) or more: Sensor trouble, improper installation, or intermittent connection trouble of the circuit.

PROCEDURE

1. **INSPECT TRANSMISSION REVOLUTION SENSOR (SENSOR INSTALLATION)**
   a. Remove the valve body assembly.
   b. Make sure that the connector is properly connected, and check the transmission revolution sensor installation.

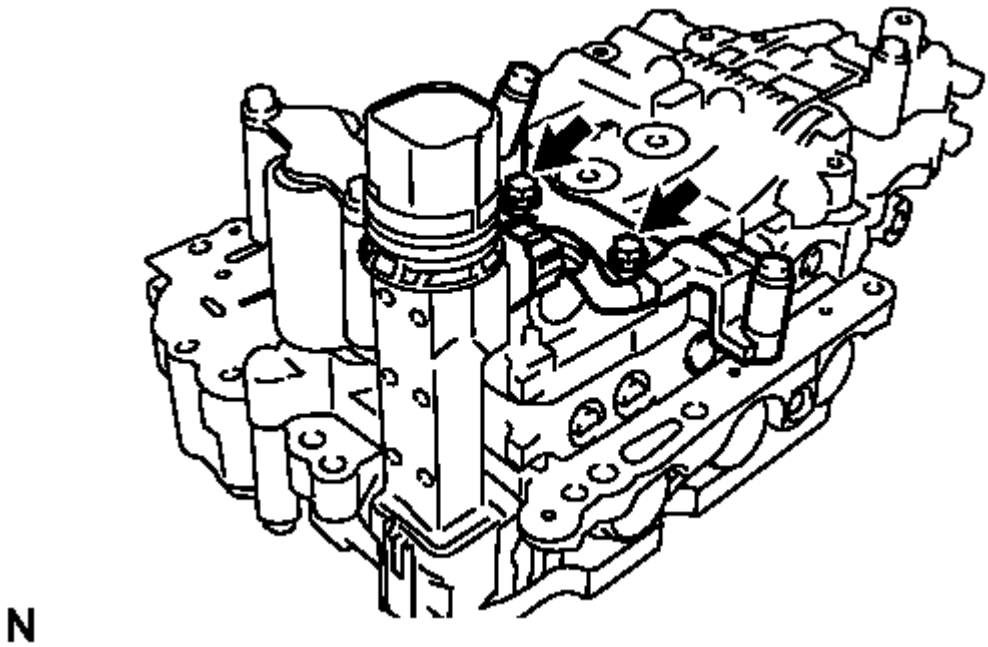

Fig. 42: Identifying Speed Sensor Bolts

Courtesy of TOYOTA MOTOR SALES, U.S.A., INC.

OK

The installation bolts are tightened properly and there is no clearance between the sensor and transmission valve body.

NG --> See step 6

OK: Go to next step

2. **INSPECT TRANSMISSION WIRE**
   a. Remove the TCM.

*a

*b

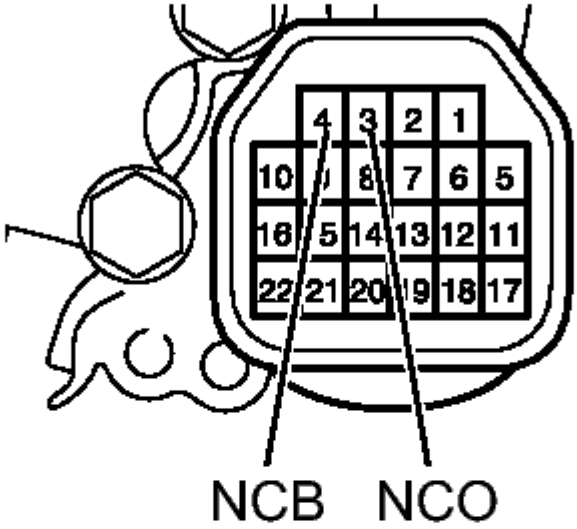

*c

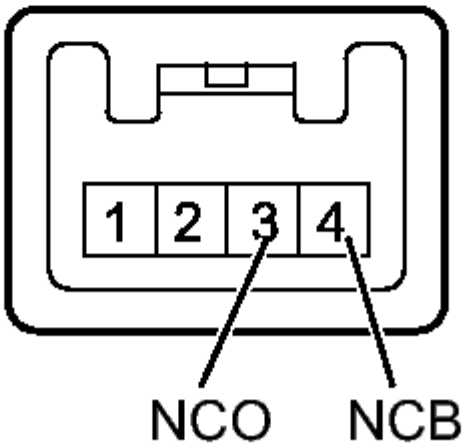

Fig. 43: Measuring Resistance Of Transmission Wire
Courtesy of TOYOTA MOTOR SALES, U.S.A., INC.

b. Disconnect the speed sensor connector from the transmission wire.
c. Measure the resistance according to the value(s) in the table below.

Standard Resistance

Tester Connection	Condition	Specified Condition
3 (NCO) - 3 (NCO)	Always	Below 1 ohms
4 (NCB) - 4 (NCB)	Always	Below 1 ohms
3 (NCO) - Body ground	Always	10 kohms or higher
4 (NCB) - Body ground	Always	10 kohms or higher
3 (NCO) - All other terminals except 4 (NCB)	Always	10 kohms or higher
4 (NCB) - All other terminals except 3 (NCO)	Always	10 kohms or higher

TEXT IN ILLUSTRATION

*a	Component without harness connected: (Transmission Wire)
*b	TCM side:
*c	Sensor Side:

NG --> See step 7

OK: Go to next step

3. **REPLACE TRANSMISSION REVOLUTION SENSOR**
   a. Replace the transmission revolution sensor. Refer to **REMOVAL** .

NEXT: Go to next step

4. **CHECK DTC OUTPUT**

a. Connect the Techstream to the DLC3.
b. Start the engine and turn the Techstream on.
c. Enter the following menus: Powertrain / ECT / Trouble Codes / Clear.

HINT:

Write down the currently output DTCs before clearing them.

d. Perform the monitor drive pattern. Refer to **MONITOR DRIVE PATTERN** .
e. Enter the following menus: Powertrain / ECT / Trouble Codes.
f. Read the DTCs using the Techstream.

RESULT

Result	Proceed to
No output	A
Only P0791 and/or P0793 is output	B

B --> See step 5

A --> END

5. **REPLACE TCM. Refer to REMOVAL**
6. **SECURELY INSTALL OR REPLACE TRANSMISSION REVOLUTION SENSOR. Refer to INSTALLATION**
7. **REPLACE TRANSMISSION WIRE. Refer to REMOVAL**

DTC P0796: PRESSURE CONTROL SOLENOID "C" PERFORMANCE (SHIFT SOLENOID VALVE SL3)

DESCRIPTION

The TCM uses the vehicle speed signal and signals from the transmission speed sensors (NC, NT) to detect the actual gear (1st, 2nd, 3rd, 4th, 5th or 6th gear).

Then the TCM compares the actual gear with the shift schedule in the TCM memory to detect mechanical problems of the shift solenoid valves and valve body.

DTC No.	DTC Detection Condition	Trouble Area

P0796	The engine revs freely when 2nd or 6th gear is commanded (2 trip detection logic). When the following is detected twice (2 trip detection logic): • When 1st gear is commanded, 2nd gear is engaged.	• Shift solenoid valve SL3 remains open or closed. • Valve body is blocked. • Automatic transaxle (clutch, brake or gear etc.)

MONITOR DESCRIPTION

The TCM commands gear shifts by turning the shift solenoid valves on and off. According to the engine speed (NE), input speed (NT) and output speed (NC), the TCM detects the actual gear (1st, 2nd, 3rd, 4th, 5th or 6th gear). When the gear commanded by the TCM and the actual gear are not the same, the TCM illuminates the MIL and stores the DTC.

MONITOR STRATEGY

Related DTCs	P0796: Shift solenoid valve SL3/OFF malfunction Shift solenoid valve SL3/ON malfunction
Required sensors/Components	Shift solenoid valve SL3, Input speed sensor (NT), Output speed sensor (NC), Crankshaft position sensor (NE)
Frequency of operation	Continuous
Duration	OFF malfunction (A) and (B) 0.5 seconds OFF malfunction (C) and (D) 0.8 seconds ON malfunction 0.8 seconds
MIL operation	2 driving cycles
Sequence of operation	None

TYPICAL ENABLING CONDITIONS

ALL:

The monitor will run whenever this DTC is not present.	P0712, P0713 (ATF temperature sensor circuit (TFT sensor)) P0115, P0117, P0118 (ECT sensor circuit) P0715, P0717 (Input speed sensor (NT) circuit) P0791, P0793 (Output speed sensor (NC) circuit) P0748 (Shift solenoid valve SL1 circuit) P0778 (Shift solenoid valve SL2 circuit) P0798 (Shift solenoid valve SL3 circuit)

(Not circuit malfunction)	P2810 (Shift solenoid valve SL4 circuit) P0327, P0328, P0332, P0333 (KCS sensor circuit) P0120, P0121, P0122, P0123, P0220, P0222, P0223, P0604, P0606, P060A, P060B, P060D, P060E, P0657, P1607, P2102, P2103, P2111, P2112, P2118, P2119, P2135 ((ETCS) Electronic throttle control system) U0100 (CAN communication system)
Transmission range	D
TFT (Transmission fluid temperature)	-10°C (14°F) or more
TFT (Transmission fluid temperature) sensor circuit	No circuit malfunction
ECT (Engine coolant temperature) sensor circuit	No circuit malfunction
Input speed sensor (NT) circuit	No circuit malfunction
Output speed sensor (NC) circuit	No circuit malfunction
Shift solenoid valve SL1 circuit	No circuit malfunction
Shift solenoid valve SL2 circuit	No circuit malfunction
Shift solenoid valve SL3 circuit	No circuit malfunction
Shift solenoid valve SL4 circuit	No circuit malfunction
KCS (Knock control sensor circuit)	No circuit malfunction
(ETCS) Electronic throttle control system	Not system down
CAN communication system	Not system down
Engine	Starting

OFF MALFUNCTION (A):

TCM selected gear	2nd
Throttle valve opening angle	3% or more
TCM indicated pressure value of SL1	1200 kPa
TCM indicated pressure value of SL2	0 kPa
TCM indicated pressure value of SL3	1200 kPa

OFF MALFUNCTION (B):

TCM selected gear	6th
Throttle valve opening angle	3% or more
TCM indicated pressure value of SL1	0 kPa
TCM indicated pressure value of SL2	1200 kPa
TCM indicated pressure value of SL3	1200 kPa

OFF MALFUNCTION (C):

TCM selected gear	2nd
Throttle valve opening angle:	
(When condition "D" is not detected)	4.5% or more at engine speed 2000 RPM (condition varies with engine speed)
	1.5% or more at output speed 750 RPM

(When condition "D" is detected)	(condition varies with output speed)
Engine coolant temperature	40°C (104°F) or more

OFF MALFUNCTION (D):

Throttle valve opening angle	1.5% or more at output speed 750 RPM (condition varies with output speed)

ON MALFUNCTION:

TCM selected gear	1st
Vehicle speed	2 to 40 km/h (1.2 to 24.9 mph)
Engine speed (NE) - Input speed (NT)	50 RPM or more
Engine coolant temperature	40°C (104°F) or more

TYPICAL MALFUNCTION THRESHOLDS

Either of the following conditions is met: OFF malfunction (A) or (B) or ((C) and (D)), or ON malfunctions

2 detections are necessary per driving cycle:

1st detection; temporary flag ON

2nd detection; pending fault code ON

OFF MALFUNCTION (A):

Input speed (NT) - Output speed (NC) x 2nd gear ratio	1000 RPM or more

OFF MALFUNCTION (B):

Input speed (NT) - Output speed (NC) x 6th gear ratio	1000 RPM or more

OFF MALFUNCTION (C):

Input speed (NT) / Output speed (NC)	3.304 to 7.724

OFF MALFUNCTION (D):

Input speed (NT) / Output speed (NC)	3.304 to 7.724

ON MALFUNCTION:

Input speed (NT) / Output speed (NC)	1.901 to 2.340

INSPECTION PROCEDURE

NOTE: **Perform the universal trip to clear permanent DTCs. Refer to DTC CHECK / CLEAR .**

PROCEDURE

1. **CHECK OTHER DTCS OUTPUT (IN ADDITION TO DTC P0796)**
   a. Connect the Techstream to the DLC3.
   b. Turn the ignition switch to ON.
   c. Turn the Techstream on.
   d. Enter the following menus: Powertrain / ECT / Trouble Codes.
   e. Read the DTCs using the Techstream.

   RESULT

Result	Proceed to
P0796 and other DTCs are output	A
Only P0796 is output	B

   HINT:

   If a solenoid is stuck off, DTCs for several solenoids including the malfunctioning solenoid will be detected.

B --> See step 3

A: Go to next step

2. **PERFORM ACTIVE TEST USING TECHSTREAM (CONTROL THE SHIFT POSITION)**

NOTE: This test should always be performed with at least 2 people.

   a. Warm up the engine.
   b. Turn the ignition switch off.
   c. Connect the Techstream to the DLC3.
   d. Turn the ignition switch to ON.
   e. Turn the Techstream on.
   f. Enter the following menus: Powertrain / ECT / Active Test.
   g. According to the display on the Techstream, perform the Active Test.

   HINT:

Comparing the gear commanded by the Active Test with the actual gear enables confirmation of the problem. Refer to **FAIL-SAFE CHART** .

ECT

Tester Display	Test Part	Control Range	Diagnostic Note
Control the Shift Position	Operates the shift solenoid valves to allow gears to selected manually.	• Press "-->" button: Upshift occurs • Press "<--" button: Downshift occurs	Can be used to check the operation of the shift solenoid valves.

NOTE:

- **This test can be conducted when the vehicle is stopped.**
- **When shifting gears using the Active Test function, do not operate the accelerator pedal for 2 seconds before and after shifting gears.**

HINT:

The gear commanded by the TCM is shown in the Data List / Shift Status display on the Techstream.

h. Check the vehicle speed and the gear when the engine speed is 1000 RPM.

HINT:

Because the torque converter clutch has not engaged, it may be difficult to obtain the speeds specified in 4th, 5th, and 6th gear, however a difference of speed should still be evident following each gear change.

Standard

1st	2nd	3rd	4th	5th	6th
8 to 12 km/h (5 to 7.5 mph)	15 to 19 km/h (9.3 to 11.8 mph)	21 to 25 km/h (13.0 to 15.5 mph)	31 to 35 km/h (19.3 to 21.7 mph)	44 to 48 km/h (27.3 to 29.8 mph)	52 to 56 km/h (32.3 to 34.8 mph)

i. Compare the TCM commanded gear and the actual gear.

RESULT

Actuator Gear during Malfunction		TCM Commanded Gear						Proceed to
		1st	2nd	3rd	4th	5th	6th	
Shift solenoid SL1	Stuck ON	1st	2nd	3rd	4th	4th	4th	A
	Stuck OFF	N*1	N*1	N*1	N*1	5th	6th	
Shift solenoid SL2	Stuck ON	4th	4th	4th	4th	5th	6th	B
	Stuck OFF	1st	2nd	3rd	1st	N*1	N*1	
Shift solenoid SL3	Stuck ON	2nd	2nd	3rd	4th	5th	6th	C
	Stuck OFF	1st	1st	3rd	4th	5th	N*1	
Shift solenoid SL4	Stuck ON*3	3rd	3rd	3rd	4th	5th	5th	D
	Stuck OFF	1st	2nd	1st	4th	N*1	6th	
Shift solenoid SLT	Stuck ON	N*2	N*2	N*2	N*2	N*2	N*2	E
	Stuck OFF*3	1st	2nd	3rd	4th	5th	6th	

HINT:

- *1: Neutral
- *2: If shift solenoid SLT is stuck on, the line pressure will be low. Therefore, the amount of torque that can be transmitted by each gear is lower than the normal limit. When the engine power exceeds this lowered limit, the engine speed will increase freely.
- *3: When shift solenoid SLT is stuck off, gear shifting is normal.

A --> See step 8

B --> See step 9

D --> See step 10

E --> See step 11

C: Go to next step

3. **INSPECT SHIFT SOLENOID VALVE SL3**
   a. Remove shift solenoid valve SL3.

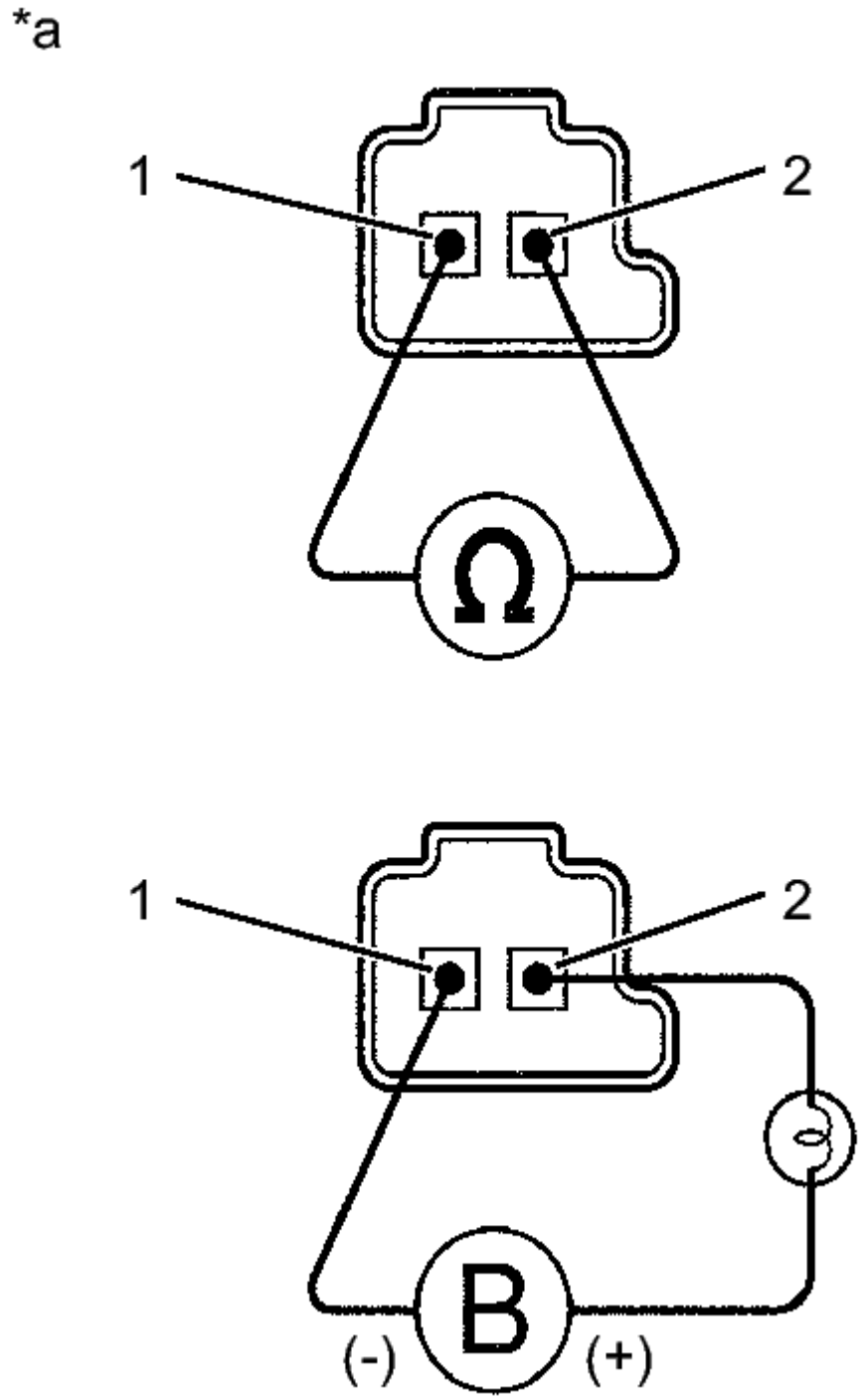

Fig. 44: Measuring Resistance Of Shift Solenoid Valve
Courtesy of TOYOTA MOTOR SALES, U.S.A., INC.

b. Measure the resistance according to the value(s) in the table below.

Standard Resistance

Tester Connection	Condition	Specified Condition
1 - 2	20°C (68°F)	5.0 to 5.6 ohms

TEXT IN ILLUSTRATION

*a	Component without harness connected: (Shift Solenoid Valve SL3)

c. Connect a battery positive (+) lead with a 21 W bulb to terminal 2 and a negative (-) lead to terminal 1 of the solenoid valve connector. Then check that the valve moves and makes an operating sound.

OK

Valve moves and makes an operating sound.

NG --> See step 6

OK: Go to next step

4. **INSPECT TRANSMISSION VALVE BODY ASSEMBLY**
   a. Check the transmission valve body assembly. Refer to **REMOVAL** .

OK

There are no foreign objects on each valve and they operate smoothly.

NG --> See step 7

OK --> See step 5

5. **REPLACE AUTOMATIC TRANSAXLE ASSEMBLY. Refer to REMOVAL**
6. **REPLACE SHIFT SOLENOID VALVE SL3. Refer to REMOVAL**
7. **REPAIR OR REPLACE TRANSMISSION VALVE BODY ASSEMBLY. Refer to REMOVAL**
8. **GO TO DTC CHART (RELATED SHIFT SOLENOID VALVE (SL1) PERFORMANCE DTC P0746). Refer to DTC P0746: Pressure Control Solenoid "A" Performance (Shift Solenoid Valve SL1)**

9. **GO TO DTC CHART (RELATED SHIFT SOLENOID VALVE (SL2) PERFORMANCE DTC P0776). Refer to DTC P0776: Pressure Control Solenoid "B" Performance (Shift Solenoid Valve SL2)**
10. **GO TO DTC CHART (RELATED SHIFT SOLENOID VALVE (SL4) PERFORMANCE DTC P2808). Refer to DTC P2808: Pressure Control Solenoid "G" Performance (Shift Solenoid Valve SL4)**
11. **GO TO DTC CHART (RELATED SHIFT SOLENOID VALVE (SLT) PERFORMANCE DTC P2714). Refer to DTC P2714: Pressure Control Solenoid "D" Performance (Shift Solenoid Valve SLT)**

DTC P0798: PRESSURE CONTROL SOLENOID "C" ELECTRICAL (SHIFT SOLENOID VALVE SL3)

DESCRIPTION

Changing from 1st to 6th is performed by the TCM turning shift solenoid valves SL1, SL2, SL3, SL4 and SL on and off. If an open or short circuit occurs in any of the shift solenoid valves, the TCM controls the remaining normal shift solenoid valves to allow the vehicle to be operated. Refer to **FAIL-SAFE CHART** .

DTC No.	DTC Detection Condition	Trouble Area
P0798	The TCM checks for an open or short in the shift solenoid valve SL3 circuit while driving and shifting gears. (1-trip detection logic) • Output signal duty equals to 100%. (NOTE: SL3 output signal duty is less than 100% under normal condition.)	• Open or short in shift solenoid valve SL3 circuit • Shift solenoid valve SL3 • Transmission wire • TCM

MONITOR DESCRIPTION

The TCM commands gear shifts by turning the shift solenoid valves on or off. When there is an open or short circuit in any shift solenoid valve circuit, the TCM detects the problem and illuminates the MIL and stores the DTC. The TCM also performs the fail-safe function and turns the other normal shift solenoid valves on or off (In case of an open or short circuit, the TCM stops sending current to the circuit.)

Refer to **FAIL-SAFE CHART** .

MONITOR STRATEGY

Related DTCs	P0798: Shift solenoid valve SL3/Range check
Required sensors/Components	Shift solenoid valve SL3

Frequency of operation	Continuous
Duration	1 second
MIL operation	Immediately
Sequence of operation	None

TYPICAL ENABLING CONDITIONS

ALL

The monitor will run whenever the following DTCs are not present	None
Ignition switch	ON
Starter	OFF

CONDITION (A)

Battery voltage	12 V or more

CONDITION (B)

Battery voltage	10 V or more and less than 12 V
CPU commanded duty	Less than 75%

TYPICAL MALFUNCTION THRESHOLDS

ALL

Output signal duty	100% or more

COMPONENT OPERATING RANGE

Output signal duty	More than 3% and less than 100%

WIRING DIAGRAM

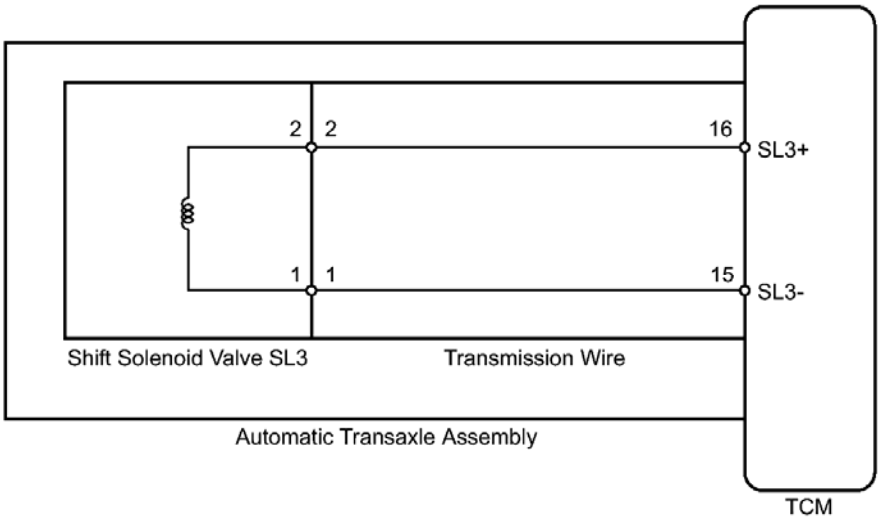

Fig. 45: Shift Solenoid Valve SL3 Circuit - Wiring Diagram
Courtesy of TOYOTA MOTOR SALES, U.S.A., INC.

INSPECTION PROCEDURE

NOTE: **Perform the universal trip to clear permanent DTCs. Refer to DTC CHECK / CLEAR .**

PROCEDURE

1. **INSPECT TRANSMISSION WIRE (SHIFT SOLENOID VALVE SL3)**
   a. Remove the TCM from the transaxle.

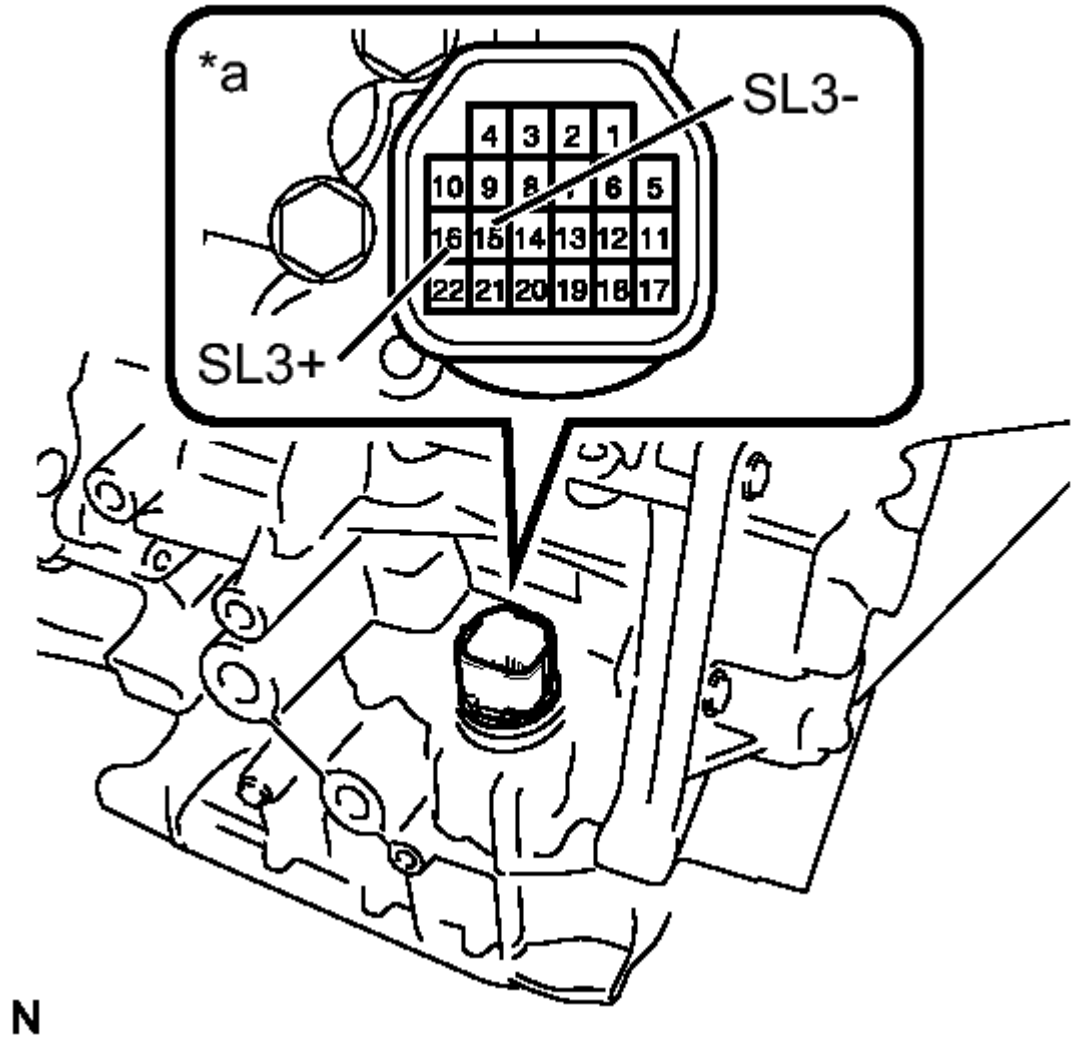

Fig. 46: Inspecting Transmission Wire (Shift Solenoid Valve SL3)
Courtesy of TOYOTA MOTOR SALES, U.S.A., INC.

b. Measure the resistance according to the value(s) in the table below.

Standard Resistance

Tester Connection	Condition	Specified Condition
16 (SL3+) - 15 (SL3-)	20°C (68° F)	5.0 to 5.6 ohms
16 (SL3+) - Body ground	Always	10 kohms or higher
15 (SL3-) - Body	Always	10 kohms

ground		or higher
16 (SL3+) - All other terminals except 15 (SL3-)	Always	10 kohms or higher
15 (SL3-) - All other terminals except 16 (SL3+)	Always	10 kohms or higher

TEXT IN ILLUSTRATION

*a	Component without harness connected: (Transmission Wire)

NG --> See step 2

OK --> See step 4

2. **INSPECT SHIFT SOLENOID VALVE SL3**
   a. Remove shift solenoid valve SL3.

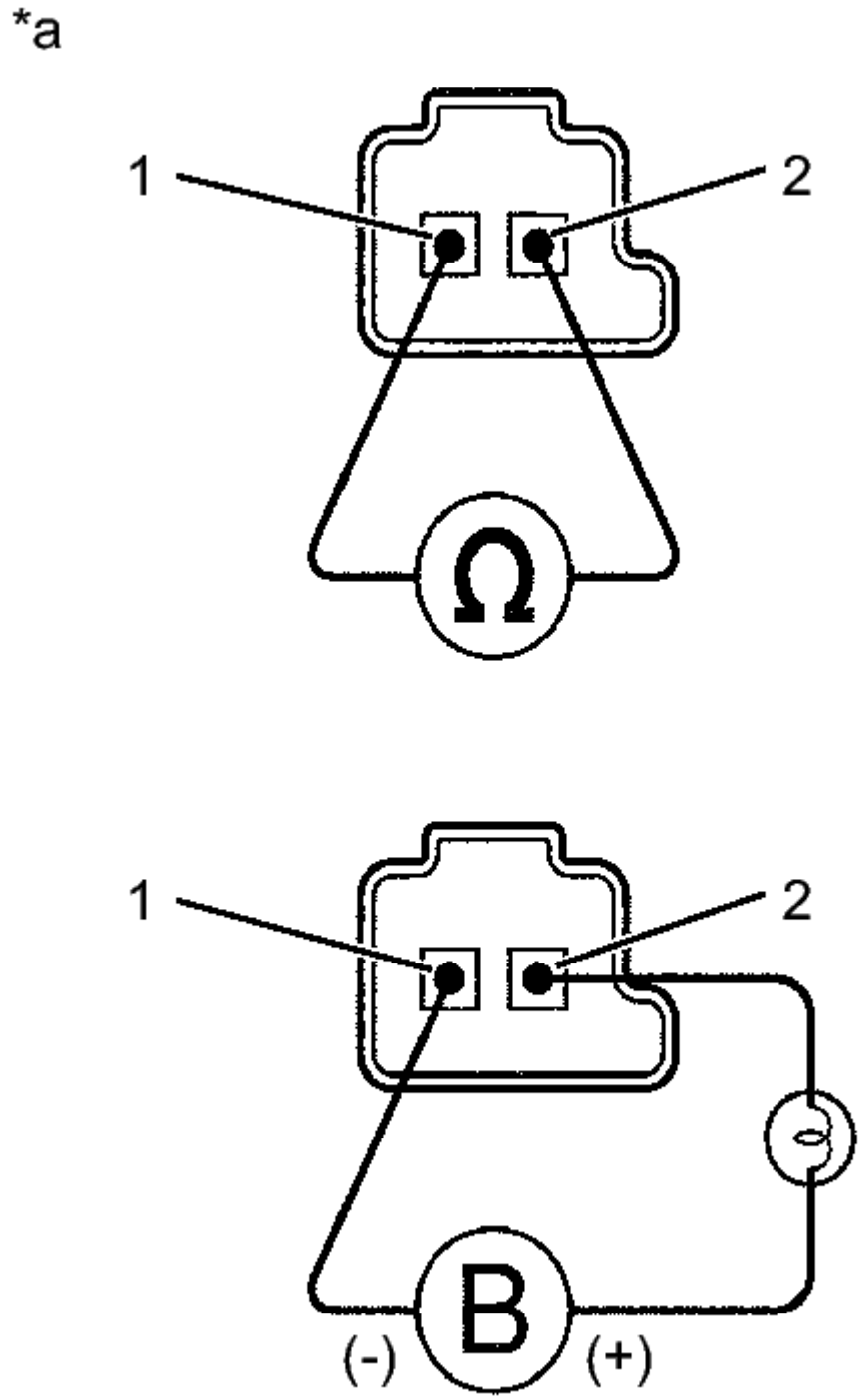

Fig. 47: Measuring Resistance Of Shift Solenoid Valve
Courtesy of TOYOTA MOTOR SALES, U.S.A., INC.

b. Measure the resistance according to the value(s) in the table below.

Standard Resistance

Tester Connection	Condition	Specified Condition
1 - 2	20°C (68°F)	5.0 to 5.6 ohms

TEXT IN ILLUSTRATION

*a	Component without harness connected: (Shift Solenoid Valve SL3)

c. Connect a battery positive (+) lead with a 21 W bulb to terminal 2 and a negative (-) lead to terminal 1 of the solenoid valve connector. Then check that the valve moves and makes an operating sound.

OK

Valve moves and makes an operating sound.

NG --> See step 5

OK --> See step 3

3. **REPLACE TRANSMISSION WIRE. Refer to REMOVAL**
4. **REPLACE TCM. Refer to REMOVAL**
5. **REPLACE SHIFT SOLENOID VALVE SL3. Refer to REMOVAL**

DTC P0989: TRANSMISSION FLUID PRESSURE SENSOR / SWITCH "E" CIRCUIT LOW; DTC P0990: TRANSMISSION FLUID PRESSURE SENSOR / SWITCH "E" CIRCUIT HIGH

DESCRIPTION

No. 3 ATF pressure switch is installed in the lock-up solenoid automatic transmission fluid (ATF) output passage and is used to detect a malfunction in the lock-up solenoid.

DTC No.	DTC Detection Condition	Trouble Area
P0989	No. 3 ATF pressure switch is OFF when lock-up occurs in response to a lock-up request (2 trip detection logic).	
	When both of the following are detected (2 trip detection logic):	

P0990	• No. 3 ATF pressure switch is ON when lock-up does not occur. • Lock-up does not occur when shift solenoid valve (SLU) is requested to turn off in the lock-up range.	• ATF temperature sensor assembly (No. 3 ATF pressure switch) • Transmission wire • TCM

MONITOR DESCRIPTION

The TCM illuminates the MIL and stores the DTC when the TCM detects that the ATF pressure switch is OFF with the lock-up solenoid ON or when the TCM detects that the ATF pressure switch is ON with the lock-up solenoid OFF.

MONITOR STRATEGY

Related DTCs	P0989: No. 3 ATF pressure switch OFF malfunction P0990: No. 3 ATF pressure switch ON malfunction
Required sensors/Components	No. 3 ATF pressure switch
Frequency of operation	Continuous
Duration	P0989: 1.8 seconds P0990 (a): 1.2 seconds P0990 (b): 0.6 seconds
MIL operation	2 driving cycles
Sequence of operation	None

TYPICAL ENABLING CONDITIONS

ALL:

The monitor will run whenever this DTC is not present. (Not circuit malfunction)	P0712, P0713 (ATF temperature sensor circuit (TFT sensor)) P0115, P0117, P0118 (ECT sensor circuit) P0715, P0717 (Input speed sensor (NT) circuit) P0791, P0793 (Output speed sensor (NC) circuit) P0748 (Shift solenoid valve SL1 circuit) P0778 (Shift solenoid valve SL2 circuit) P0798 (Shift solenoid valve SL3 circuit) P2810 (Shift solenoid valve SL4 circuit) P2759 (Shift solenoid valve SLU circuit) P2769, P2770 (Shift solenoid valve SL circuit) P0327, P0328, P0332, P0333 (KCS sensor circuit) P0120, P0121, P0122, P0123, P0220, P0222, P0223, P0604, P0606, P060A, P060B, P060D,

	P060E, P0657, P1607, P2102, P2103, P2111, P2112, P2118, P2119, P2135 ((ETCS) Electronic throttle control system) U0100 (CAN communication system)
Engine coolant temperature	40°C (104°F) or more
Spark advance from Max. retard timing by KCS control	0°CA or more
Transmission range	D
TFT (Transmission fluid temperature)	-10°C (14°F) or more
TFT (Transmission fluid temperature) sensor circuit	No circuit malfunction
ECT (Engine coolant temperature) sensor circuit	No circuit malfunction
Input speed sensor (NT) circuit	No circuit malfunction
Output speed sensor (NC) circuit	No circuit malfunction
Shift solenoid valve SL1 circuit	No circuit malfunction
Shift solenoid valve SL2 circuit	No circuit malfunction
Shift solenoid valve SL3 circuit	No circuit malfunction
Shift solenoid valve SL4 circuit	No circuit malfunction
Shift solenoid valve SLU circuit	No circuit malfunction
Shift solenoid valve SL circuit	No circuit malfunction
KCS (Knock control sensor circuit)	No circuit malfunction
(ETCS) Electronic throttle control system	Not system down
CAN communication system	Not system down
Engine	Starting
TCM selected gear	Not 1st
Vehicle speed	25 km/h (15.5 mph) or more
Input speed (NT) / Output speed (NO) with 1st	3.304 to 7.724
Input speed (NT) / Output speed (NO) with 2nd	1.901 to 2.340
Input speed (NT) / Output speed (NO) with 3rd	1.399 to 1.649
Input speed (NT) / Output speed (NO) with 4th	0.998 to 1.138
Input speed (NT) / Output speed (NO) with 5th	0.705 to 0.836
Input speed (NT) / Output speed (NO) with 6th	0.568 to 0.695

P0989:

TCM lock-up command	ON
Engine speed (NE) - Input speed (NT)	Less than 35 RPM
Throttle valve opening angle	7% or more
Vehicle speed	Less than 100 km/h (62.1 mph)
Shift solenoid valve SLU	Not ON malfunction

P0990:

TCM indicated pressure valve of SLU	0 kPa
TCM lock-up command	OFF

Shift solenoid valve SLU	Not malfunction
Shift solenoid valve SL	Not OFF malfunction

TYPICAL MALFUNCTION THRESHOLDS

P0989:

No. 3 transmission fluid pressure switch	OFF

P0990:

Following conditions are met	(a) and (b)
(a) Engine speed (NE) - Input speed (NT)	35 RPM or more
(b) No. 3 transmission fluid pressure switch	ON

WIRING DIAGRAM

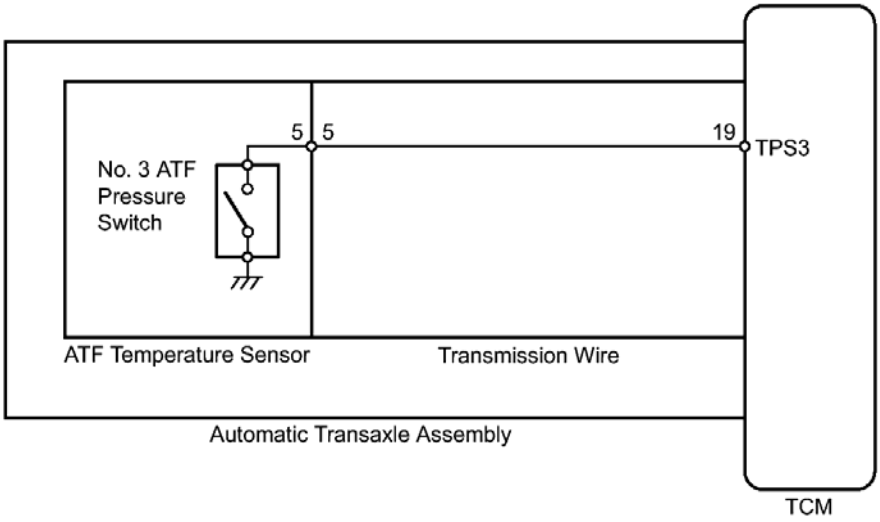

Fig. 48: Transmission Fluid Pressure Sensor / Switch Circuit - Wiring Diagram
Courtesy of TOYOTA MOTOR SALES, U.S.A., INC.

INSPECTION PROCEDURE

NOTE: **Perform the universal trip to clear permanent DTCs. Refer to DTC CHECK / CLEAR .**

PROCEDURE

1. **CHECK OTHER DTC OUTPUT (IN ADDITION TO DTC P0989 OR P0990)**
   a. Connect the Techstream to the DLC3.
   b. Turn the ignition switch to ON.

c. Turn the Techstream on.
d. Enter the following menus: Powertrain / ECT / Trouble Codes.
e. Read the DTCs using the Techstream.

RESULT

Result	Proceed to
Only P0990 is output	A
Only P0989 is output	B
P0989 or P0990 and other DTCs are output	C

HINT:

If a solenoid is stuck OFF, DTCs for several solenoids including the malfunctioning solenoid will be detected.

B --> See step 4

C --> See step 5

A: Go to next step

2. **INSPECT TRANSMISSION WIRE (NO. 3 ATF PRESSURE SWITCH)**
   a. Remove the TCM.

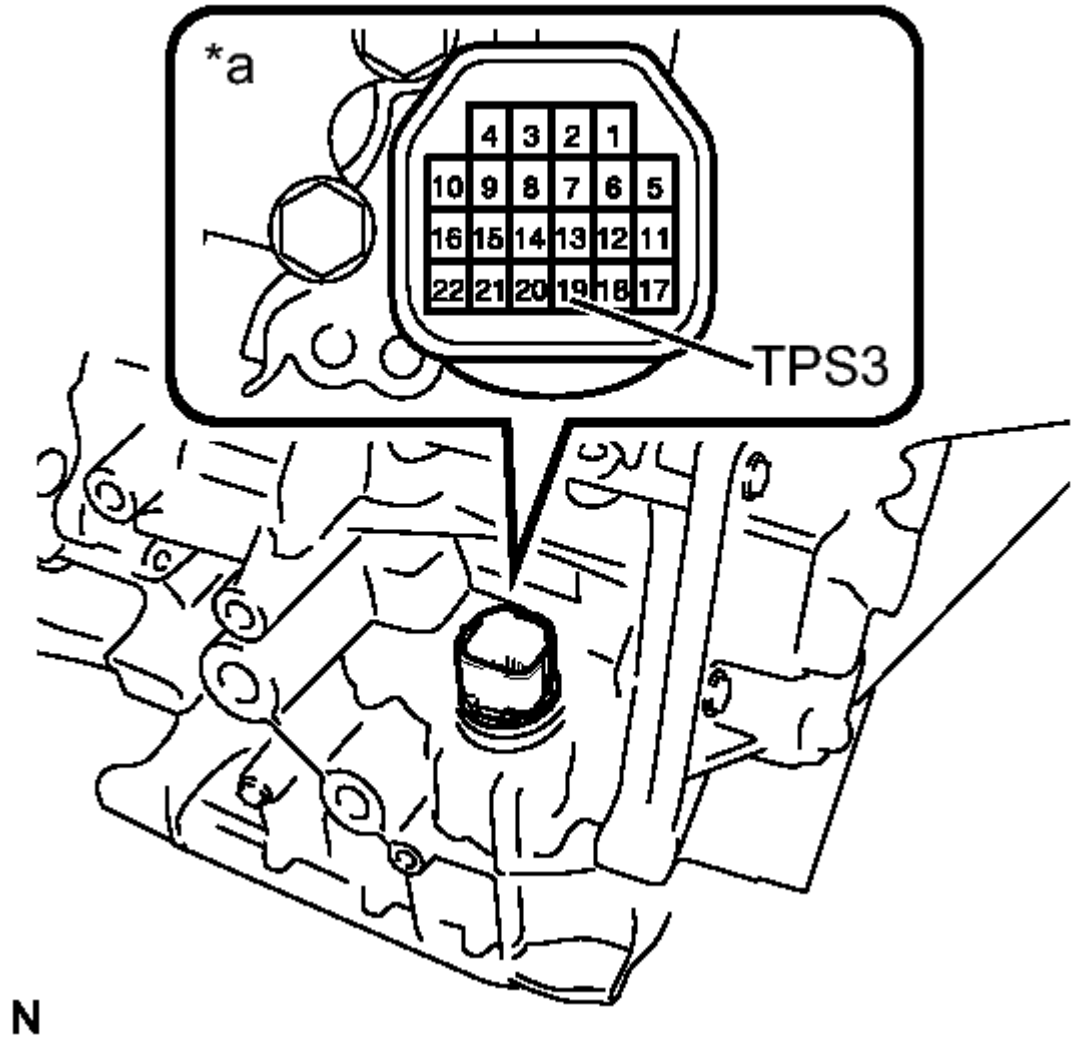

Fig. 49: Inspecting Transmission Wire (No. 3 ATF Pressure Switch)
Courtesy of TOYOTA MOTOR SALES, U.S.A., INC.

b. Measure the resistance according to the value(s) in the table below.

Standard Resistance

Tester Connection	Condition	Specified Condition
19 (TPS3) - Body ground (Valve body assembly) or other	Always	10 kohms or higher

terminals		

TEXT IN ILLUSTRATION

*a	Component without harness connected: (Transmission Wire)

NG --> See step 3

OK --> See step 8

3. **INSPECT ATF TEMPERATURE SENSOR ASSEMBLY (NO. 3 ATF PRESSURE SWITCH)**
   a. Remove the oil strainer assembly.
   b. Disconnect the connector from the ATF temperature sensor assembly.

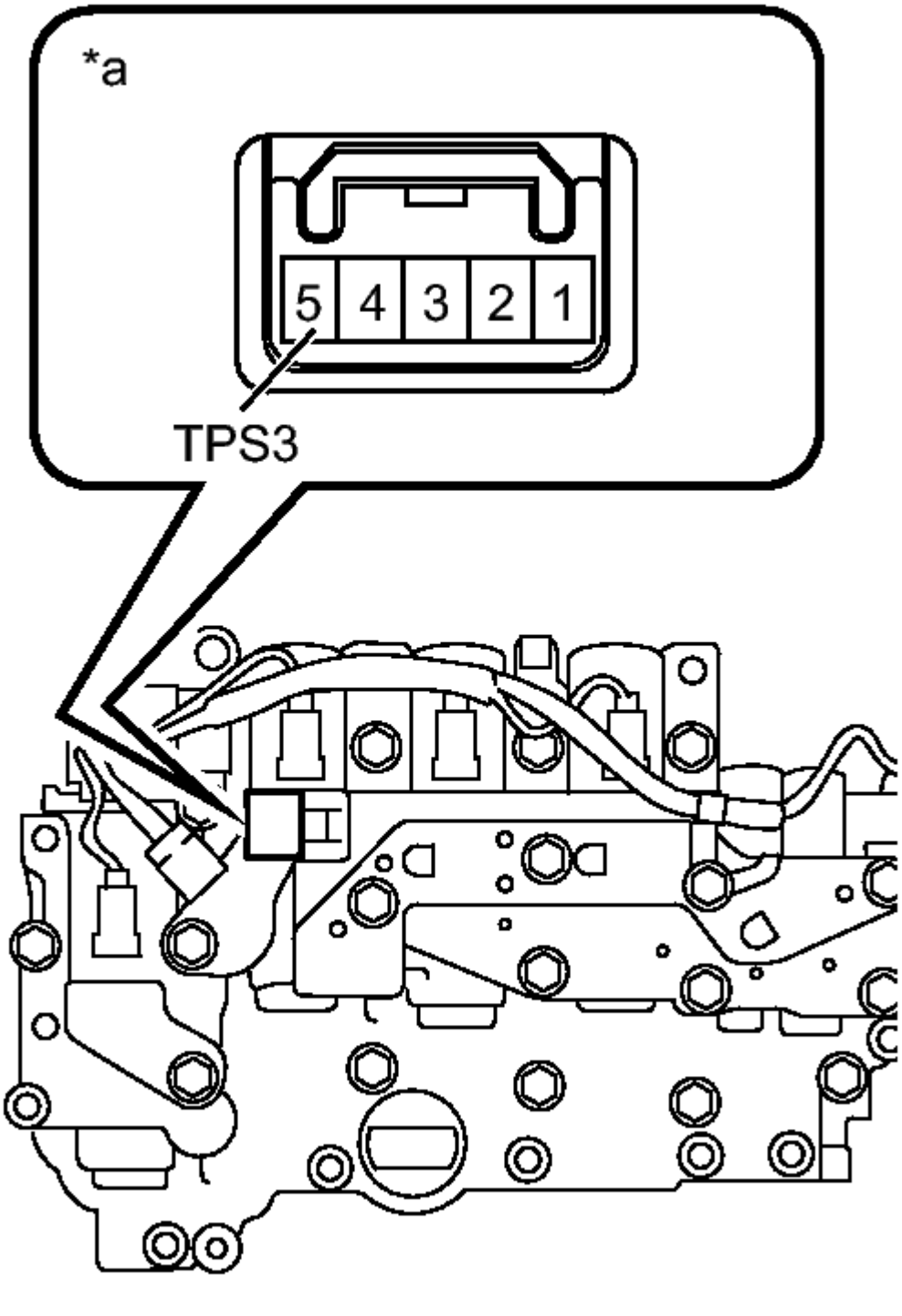

Fig. 50: Inspecting ATF Temperature Sensor Assembly (No. 3 ATF Pressure Switch)
Courtesy of TOYOTA MOTOR SALES, U.S.A., INC.

c. Measure the resistance according to the value(s) in the table below.

Standard Resistance

Tester Connection	Condition	Specified Condition
5 (TPS3) - Body ground (Valve body assembly) or other terminals	Always	10 kohms or higher

TEXT IN ILLUSTRATION

*a	Component without harness connected: (ATF Temperature Sensor)

NG --> See step 10

OK --> See step 6

4. **INSPECT TRANSMISSION WIRE**
   a. Remove the oil strainer assembly.
   b. Remove the TCM.

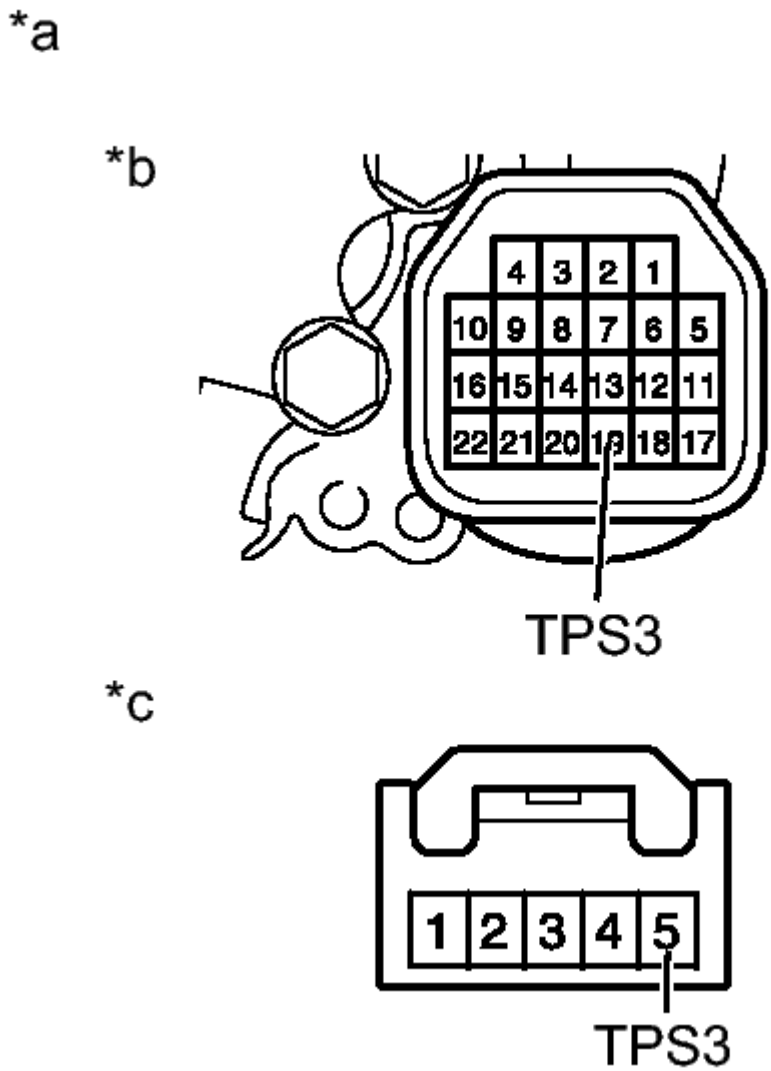

Fig. 51: Measuring Resistance Of Transmission Wire
Courtesy of TOYOTA MOTOR SALES, U.S.A., INC.

c. Disconnect the connector from the ATF temperature sensor assembly.
d. Measure the resistance according to the value(s) in the table below.

Standard Resistance

Tester Connection	Condition	Specified Condition
19 (TPS3) - 5 (TPS3)	Always	Below 1 ohms
5 (TPS3) - Body ground		

(Valve body assembly) or other terminals	Always	10 kohms or higher

TEXT IN ILLUSTRATION

*a	Component without harness connected: (Transmission Wire)
*b	TCM Side:
*c	ATF Temperature Sensor Side:

NG --> See step 6

OK: Go to next step

5. **GO TO DTC CHART. Refer to DIAGNOSTIC TROUBLE CODE CHART**
6. **REPLACE TRANSMISSION WIRE. Refer to REMOVAL**
7. **REPLACE ATF TEMPERATURE SENSOR ASSEMBLY**
   a. Replace ATF temperature sensor. Refer to **REMOVAL** .

NEXT: Go to next step

8. **REPLACE TCM. Refer to REMOVAL**
9. **CHECK DTC OUTPUT**
   a. Connect the Techstream to the DLC3.
   b. Start the engine and turn the Techstream on.
   c. Enter the following menus: Powertrain / ECT / Trouble Codes / Clear.

   HINT:

   Write down the currently output DTCs before clearing them.

   d. Perform the monitor drive pattern. Refer to **MONITOR DRIVE PATTERN** .
   e. Enter the following menus: Powertrain / ECT / Trouble Codes.
   f. Read the DTCs using the Techstream.

   RESULT

Result	Proceed to
DTC not output	A
Only P0989 is output	B

B --> See step 8

A --> END

10. **REPLACE ATF TEMPERATURE SENSOR ASSEMBLY. Refer to REMOVAL**

DTC P2714: PRESSURE CONTROL SOLENOID "D" PERFORMANCE (SHIFT SOLENOID VALVE SLT)

DESCRIPTION

The linear solenoid valve (SLT) controls the transmission line pressure for smooth transmission operation based on signals from the throttle position sensor and the vehicle speed sensor. The TCM adjusts the duty ratio of the SLT solenoid valve to control hydraulic line pressure coming from the primary regulator valve. Appropriate line pressure assures smooth shifting with varying engine outputs.

DTC No.	DTC Detection Condition	Trouble Area
P2714	The TCM detects a malfunction in the shift solenoid valve SLT (ON side) according to the difference in the speed between the turbine and the output shaft, and also by the transmission fluid pressure. (2 trip detection logic)	• Shift solenoid valve SLT remains open • Shift solenoid valve SL1, SL2, SL3 or SL4 remains open or closed • Valve body is blocked • Automatic transaxle (clutch, brake or gear, etc.)

MONITOR DESCRIPTION

The TCM calculates the amount of clutch slip based on the turbine speed, output shaft speed, and gear ratio. If the amount of clutch slip exceeds a specified level, the TCM will set this DTC and illuminate the MIL.

When shift solenoid valve SLT remains on, the line pressure goes down and clutch engagement force decreases.

NOTE: **If driving continues under these conditions, clutches will burn out and the vehicle will no longer be drivable.**

MONITOR STRATEGY

Related DTCs	P2714: Shift solenoid valve SLT/ON malfunction
Required sensors/Components	Shift solenoid valve SLT
Frequency of operation	Continuous
Duration	2 seconds
MIL operation	2 driving cycles
Sequence of operation	None

TYPICAL ENABLING CONDITIONS

ON MALFUNCTION:

The monitor will run whenever this DTC is not present. (Not circuit malfunction)	P0712, P0713 (ATF temperature sensor circuit (TFT sensor)) P0115, P0117, P0118 (ECT sensor circuit) P0715, P0717 (Input speed sensor (NT) circuit) P0791, P0793 (Output speed sensor (NC) circuit) P0748 (Shift solenoid valve SL1 circuit) P0778 (Shift solenoid valve SL2 circuit) P0798 (Shift solenoid valve SL3 circuit) P2810 (Shift solenoid valve SL4 circuit) P2716 (Shift solenoid valve SLT circuit) P0327, P0328, P0332, P0333 (KCS sensor circuit) P0120, P0121, P0122, P0123, P0220, P0222, P0223, P0604, P0606, P060A, P060B, P060D, P060E, P0657, P1607, P2102, P2103, P2111, P2112, P2118, P2119, P2135 ((ETCS) Electronic throttle control system) U0100 (CAN communication system)
Transmission range	D
TFT (Transmission fluid temperature)	-10°C (14°F) or more
TFT (Transmission fluid temperature) sensor circuit	No circuit malfunction
ECT (Engine coolant temperature) sensor circuit	No circuit malfunction
Input speed sensor (NT) circuit	No circuit malfunction
Output speed sensor (NC) circuit	No circuit malfunction
Shift solenoid valve SL1 circuit	No circuit malfunction
Shift solenoid valve SL2 circuit	No circuit malfunction
Shift solenoid valve SL3 circuit	No circuit malfunction
Shift solenoid valve SL4 circuit	No circuit malfunction
Shift solenoid valve SLT circuit	No circuit malfunction
KCS (Knock control sensor circuit)	No circuit malfunction
(ETCS) Electronic throttle control system	Not system down
CAN communication system	Not system down
Engine	Starting
Input turbine torque	100 N*m or more

Input speed (NT)	250 RPM or more
Output speed (NC)	250 RPM or more

TYPICAL MALFUNCTION THRESHOLDS

ON MALFUNCTION

Detection criteria	Threshold
Input speed (NT) - Output speed (NC) x Gear ratio at output speed 1000 RPM (Condition varies with output speed)	75 RPM or more

INSPECTION PROCEDURE

NOTE: **Perform the universal trip to clear permanent DTCs. Refer to DTC CHECK / CLEAR .**

PROCEDURE

1. **CHECK OTHER DTCS OUTPUT (IN ADDITION TO DTC P2714)**
   a. Connect the Techstream to the DLC3.
   b. Turn the ignition switch to ON.
   c. Turn the Techstream on.
   d. Enter the following menus: Powertrain / ECT / Trouble Codes.
   e. Read the DTCs using the Techstream.

   RESULT

Result	Proceed to
P2714 and other DTCs are output	A
Only P2714 is output	B

   HINT:

   If a solenoid is stuck ON, DTCs for several solenoids including the malfunctioning solenoid will be detected.

B --> See step 8

A: Go to next step

2. **PERFORM ACTIVE TEST USING TECHSTREAM (SHIFT SOLENOID VALVE SLT)**

NOTE:

- **Perform the test at the normal operating ATF (Automatic Transmission Fluid) temperature: 50 to 80°C (122 to 176°F)**
- **Be sure to prevent SST hose from interfering with the exhaust pipe.**
- **This check must be conducted after checking and adjusting the engine.**
- **Perform the test with the A/C OFF.**

HINT:

Using the Techstream to perform Active Tests allows relays, VSVs, actuators and other items to be operated without removing any parts. This non-intrusive functional inspection can be very useful because intermittent operation may be discovered before parts or wiring is disturbed. Performing Active Tests early in troubleshooting is one way to save diagnostic time. Data List information can be displayed while performing Active Tests.

a. Turn the ignition switch off.
b. Lift the vehicle up.
c. Remove the test plug on the transmission case center right side and connect SST.

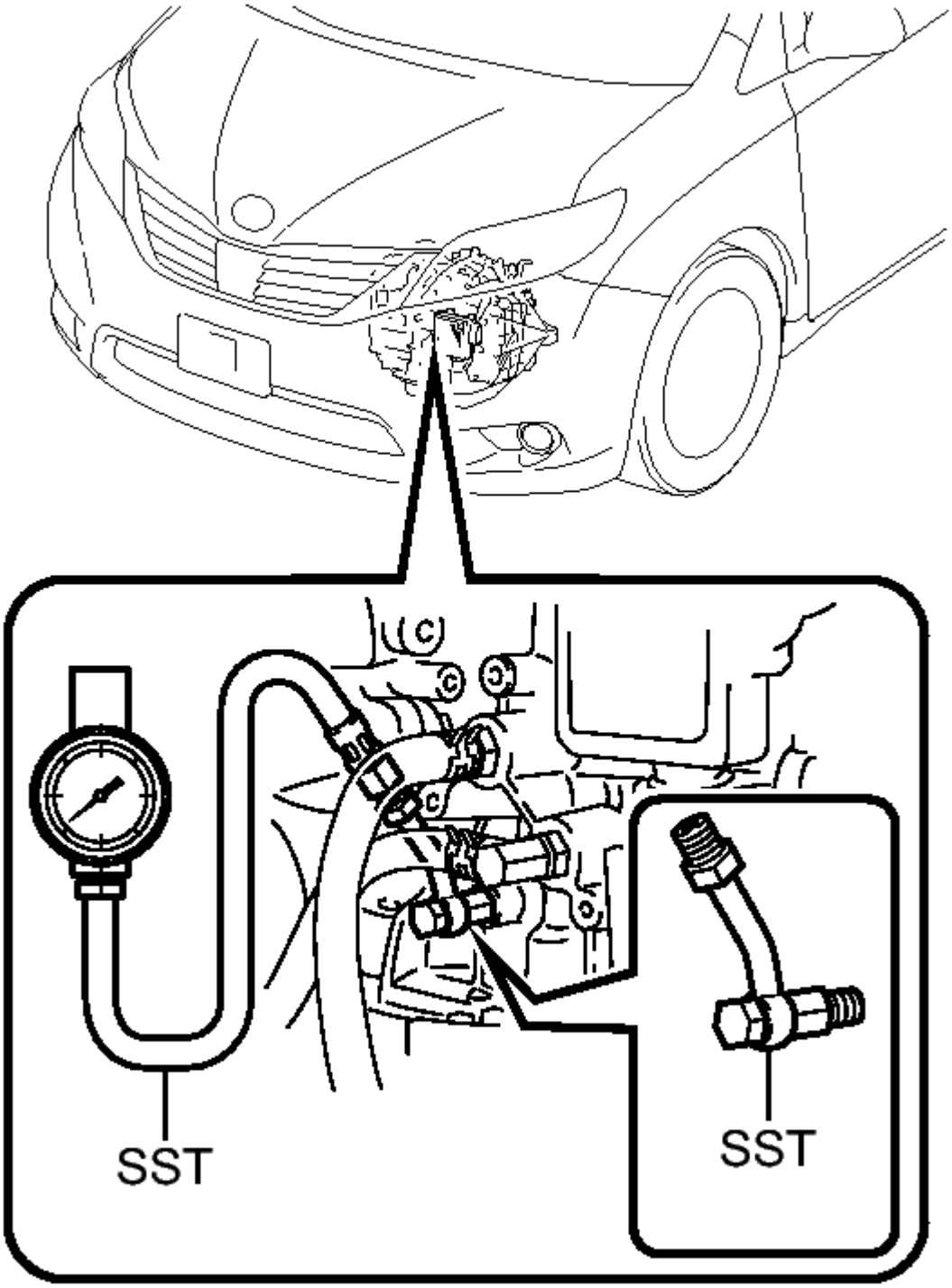

Fig. 52: Measuring Line Pressure Using SST
Courtesy of TOYOTA MOTOR SALES, U.S.A., INC.

- **SST: 09992-00095**
  09992-00231

09992-00271

d. Lower the vehicle.
e. Fully apply the parking brake and chock the 4 wheels.
f. Connect the Techstream to the DLC3.
g. Start the engine.
h. Warm up the Automatic Transmission Fluid (ATF).
i. Measure the line pressure when the engine is idling.
j. Turn the Techstream on.
k. Enter the following menus: Powertrain / ECT / Active Test.
l. Follow the instructions on the Techstream and perform the Active Test.
m. Measure the line pressure with SST.

ECT

Tester Display	Test Part	Control Range	Diagnostic Note
Activate the Solenoid (SLT)*	Operates shift solenoid SLT to raise the line pressure.	ON/OFF **HINT:** ON: No action (normal operation) OFF: Line pressure up (When the Active Test of "Activate the Solenoid (SLT)" is performed, the TCM commands the SLT solenoid to turn off).	[Vehicle Condition] • Vehicle Stopped • IDL: ON

*: "Activate the Solenoid (SLT)" in the Active Test is performed to check that the line pressure changes by connecting the SST to the automatic transaxle. The same SST is used in the Hydraulic Test. Refer to **HYDRAULIC TEST** as well.

HINT:

The pressure values in Active Test and Hydraulic Test are different from each other.

OK

The line pressure changes as specified when performing the Active Test.

NG --> See step 8

OK: Go to next step

3. **PERFORM ACTIVE TEST USING TECHSTREAM (CONTROL THE SHIFT POSITION)**

NOTE: This test should always be performed with at least 2 people.

a. Warm up the engine.
b. Turn the ignition switch off.
c. Connect the Techstream to the DLC3.
d. Turn the ignition switch to ON.
e. Turn the Techstream on.
f. Enter the following menus: Powertrain / ECT / Active Test.
g. According to the display on the Techstream, perform the Active Test.

HINT:

Comparing the gear commanded by the Active Test with the actual gear enables confirmation of the problem. Refer to **FAIL-SAFE CHART** .

ECT

Tester Display	Test Part	Control Range	Diagnostic Note
Control the Shift Position	Operates the shift solenoid valves to allow gears to selected manually.	• Press "-->" button: Upshift occurs • Press "<--" button: Downshift occurs	Can be used to check the operation of the shift solenoid valves.

NOTE:

- **This test can be conducted when the vehicle is stopped.**
- **When shifting gears using the Active Test function, do not operate the accelerator pedal for 2 seconds before and after shifting gears.**

HINT:

The gear commanded by the TCM is shown in the Data List / Shift Status display on the Techstream.

h. Check the vehicle speed and the gear when the engine speed is 1000 RPM.

HINT:

Because the torque converter clutch has not engaged, it may be difficult to obtain the speeds specified in 4th, 5th, and 6th gear, however a difference of speed should still be evident following each gear change.

Standard

1st	2nd	3rd	4th	5th	6th
8 to 12 km/h (5 to 7.5 mph)	15 to 19 km/h (9.3 to 11.8 mph)	21 to 25 km/h (13.0 to 15.5 mph)	31 to 35 km/h (19.3 to 21.7 mph)	44 to 48 km/h (27.3 to 29.8 mph)	52 to 56 km/h (32.3 to 34.8 mph)

i. Compare the TCM commanded gear and the actual gear.

RESULT

Actuator Gear during Malfunction		TCM Commanded Gear						Proceed to
		1st	2nd	3rd	4th	5th	6th	
Shift solenoid SL1	Stuck ON	1st	2nd	3rd	4th	4th	4th	A
	Stuck OFF	N*1	N*1	N*1	N*1	5th	6th	
Shift solenoid SL2	Stuck ON	4th	4th	4th	4th	5th	6th	B
	Stuck OFF	1st	2nd	3rd	1st	N*1	N*1	
Shift solenoid SL3	Stuck ON	2nd	2nd	3rd	4th	5th	6th	C
	Stuck OFF	1st	1st	3rd	4th	5th	N*1	
Shift solenoid SL4	Stuck ON*3	3rd	3rd	3rd	4th	5th	5th	D
	Stuck OFF	1st	2nd	1st	4th	N*1	6th	
Shift solenoid SLT	Stuck ON	N*2	N*2	N*2	N*2	N*2	N*2	E
	Stuck OFF*3	1st	2nd	3rd	4th	5th	6th	

HINT:

- *1: Neutral

- *2: If shift solenoid SLT is stuck on, the line pressure will be low. Therefore, the amount of torque that can be transmitted by each gear is lower than the normal limit. When the engine power exceeds this lowered limit, the engine speed will increase freely.
- *3: When shift solenoid SLT is stuck off, gear shifting is normal.

A --> See step 4

B --> See step 5

C --> See step 6

D --> See step 7

E: Go to next step

4. **GO TO DTC CHART (RELATED SHIFT SOLENOID VALVE (SL1) PERFORMANCE DTC P0746). Refer to DTC P0746: Pressure Control Solenoid "A" Performance (Shift Solenoid Valve SL1)**
5. **GO TO DTC CHART (RELATED SHIFT SOLENOID VALVE (SL2) PERFORMANCE DTC P0776). Refer to DTC P0776: Pressure Control Solenoid "B" Performance (Shift Solenoid Valve SL2)**
6. **GO TO DTC CHART (RELATED SHIFT SOLENOID VALVE (SL3) PERFORMANCE DTC P0796). Refer to DTC P0796: Pressure Control Solenoid "C" Performance (Shift Solenoid Valve SL3)**
7. **GO TO DTC CHART (RELATED SHIFT SOLENOID VALVE (SL4) PERFORMANCE DTC P2808). Refer to DTC P2808: Pressure Control Solenoid "G" Performance (Shift Solenoid Valve SL4)**
8. **INSPECT SHIFT SOLENOID VALVE SLT**
   a. Remove shift solenoid valve SLT.

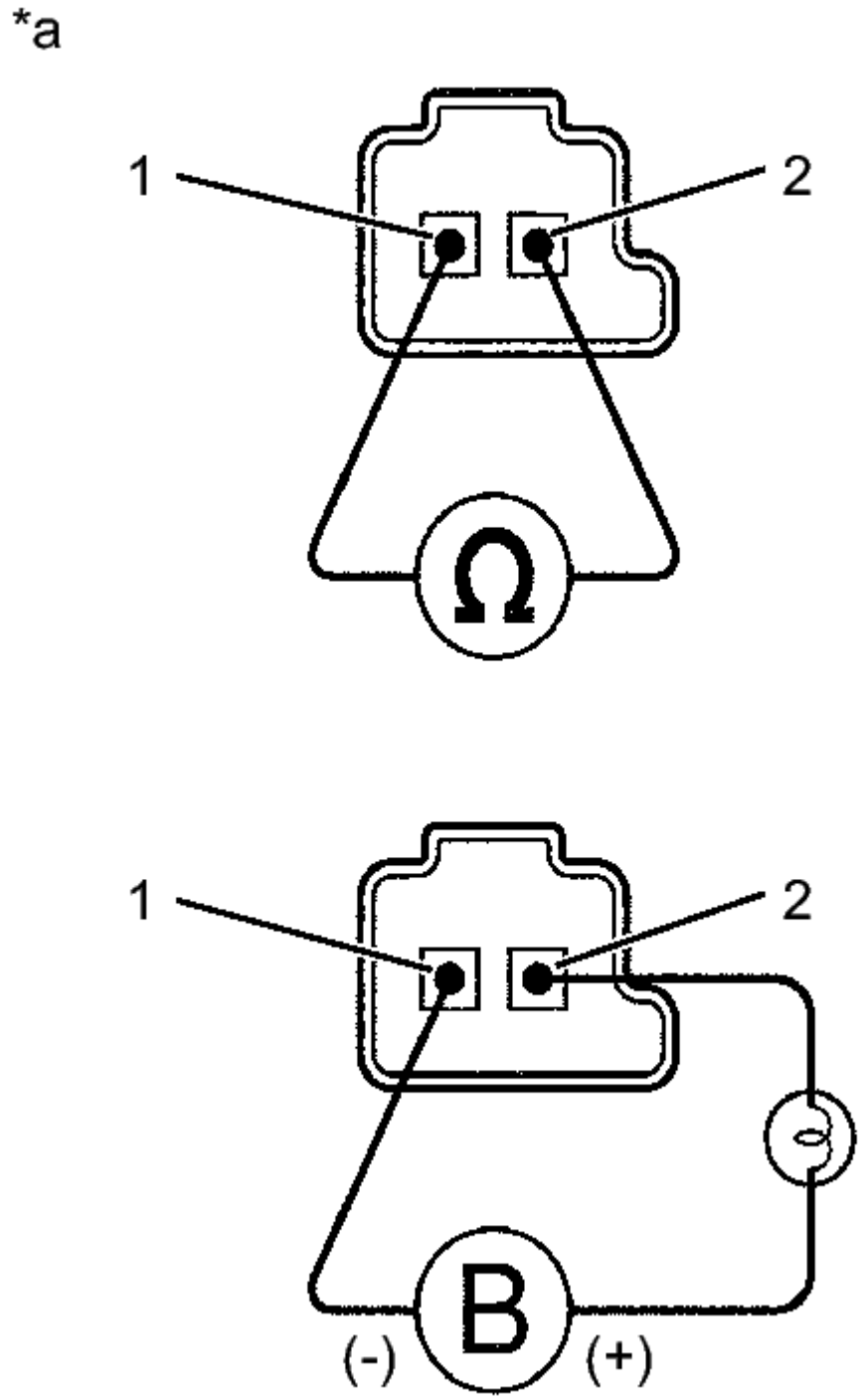

Fig. 53: Measuring Resistance Of Shift Solenoid Valve
Courtesy of TOYOTA MOTOR SALES, U.S.A., INC.

b. Measure the resistance according to the value(s) in the table below.

Standard Resistance

Tester Connection	Condition	Specified Condition
1 - 2	20°C (68° F)	5.0 to 5.6 ohms

TEXT IN ILLUSTRATION

*a	Component without harness connected: (Shift Solenoid Valve SLT)

c. Connect a battery positive (+) lead with a 21 W bulb to terminal 2 and a negative (-) lead to terminal 1 of the solenoid valve connector. Then check that the valve moves and makes an operating sound.

OK

Valve moves and makes an operating sound.

NG --> See step 11

OK: Go to next step

9. **INSPECT TRANSMISSION VALVE BODY ASSEMBLY**
   a. Check the transmission valve body assembly. Refer to **REMOVAL** .

OK

There are no foreign objects on each valve and they operate smoothly.

NG --> See step 12

OK --> See step 10

10. **REPLACE AUTOMATIC TRANSMISSION ASSEMBLY. Refer to REMOVAL**
11. **REPLACE SHIFT SOLENOID VALVE SLT. Refer to REMOVAL**
12. **REPAIR OR REPLACE TRANSMISSION VALVE BODY ASSEMBLY. Refer to REMOVAL**

DTC P2716: PRESSURE CONTROL SOLENOID "D" ELECTRICAL (SHIFT SOLENOID VALVE SLT)

DESCRIPTION

Refer to DTC P2714. Refer to **DESCRIPTION**.

DTC No.	DTC Detection Condition	Trouble Area
P2716	Open or short is detected in shift solenoid valve SLT circuit for 1 second or more while driving (1 trip detection logic).	• Open or short in shift solenoid valve SLT circuit • Shift solenoid valve SLT • Transmission wire • TCM

MONITOR DESCRIPTION

When an open or short in the linear solenoid valve (SLT) circuit is detected, the TCM interprets this as a fault. The TCM will turn on the MIL and store the DTC.

MONITOR STRATEGY

Related DTCs	P2716: Shift solenoid valve SLT/Range check
Required sensors/Components	Shift solenoid valve SLT
Frequency of operation	Continuous
Duration	1 second
MIL operation	Immediately
Sequence of operation	None

TYPICAL ENABLING CONDITIONS

ALL:

The monitor will run whenever this DTC is not present	None
Solenoid current cut status	Not cut
Ignition switch	ON
Starter	OFF

MALFUNCTION (A):

Battery voltage	12 V or more
Target current	1 A

MALFUNCTION (B):

Battery voltage	10 V or more and less than 12 V
Target current	0.75 A

MALFUNCTION (C):

Battery voltage	8 V or more

Target current	0.25 A

MALFUNCTION (D):

Battery voltage	11 V or more
Target current	1 A or more

MALFUNCTION (E):

Battery voltage	11 V or more
Target current	0.1 A or more
Commanded voltage - Last commanded voltage	Less than 0.0000191 V

TYPICAL MALFUNCTION THRESHOLDS

MALFUNCTION (A) AND (B):

Output signal duty	100% or more

MALFUNCTION (C):

Output signal duty	0% or less

MALFUNCTION (D):

Output signal monitor	No signal

MALFUNCTION (E):

Commanded voltage - Last commanded voltage	0.035 V or more

COMPONENT OPERATING RANGE

Output signal duty	Less than 100%

WIRING DIAGRAM

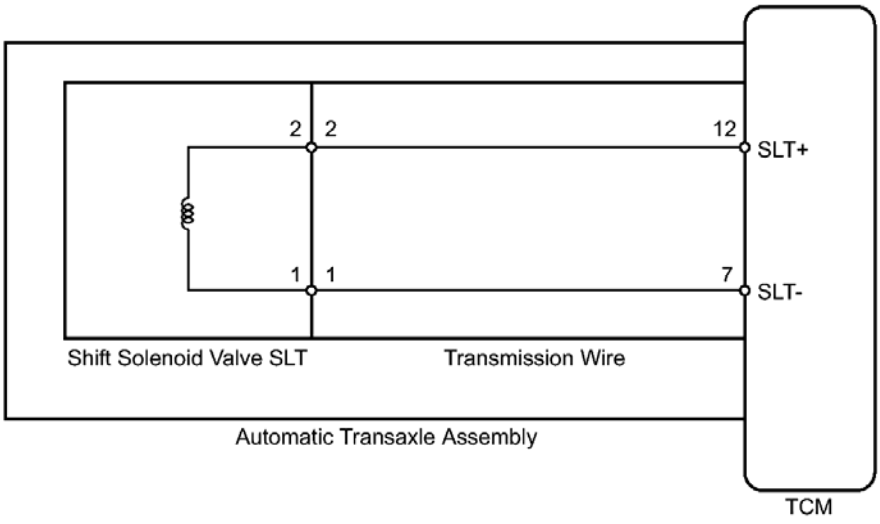

Fig. 54: Shift Solenoid Valve SLT Circuit - Wiring Diagram
Courtesy of TOYOTA MOTOR SALES, U.S.A., INC.

INSPECTION PROCEDURE

NOTE: **Perform the universal trip to clear permanent DTCs. Refer to DTC CHECK / CLEAR .**

PROCEDURE

1. **INSPECT TRANSMISSION WIRE (SHIFT SOLENOID VALVE SLT)**
   a. Remove the TCM from the transaxle.

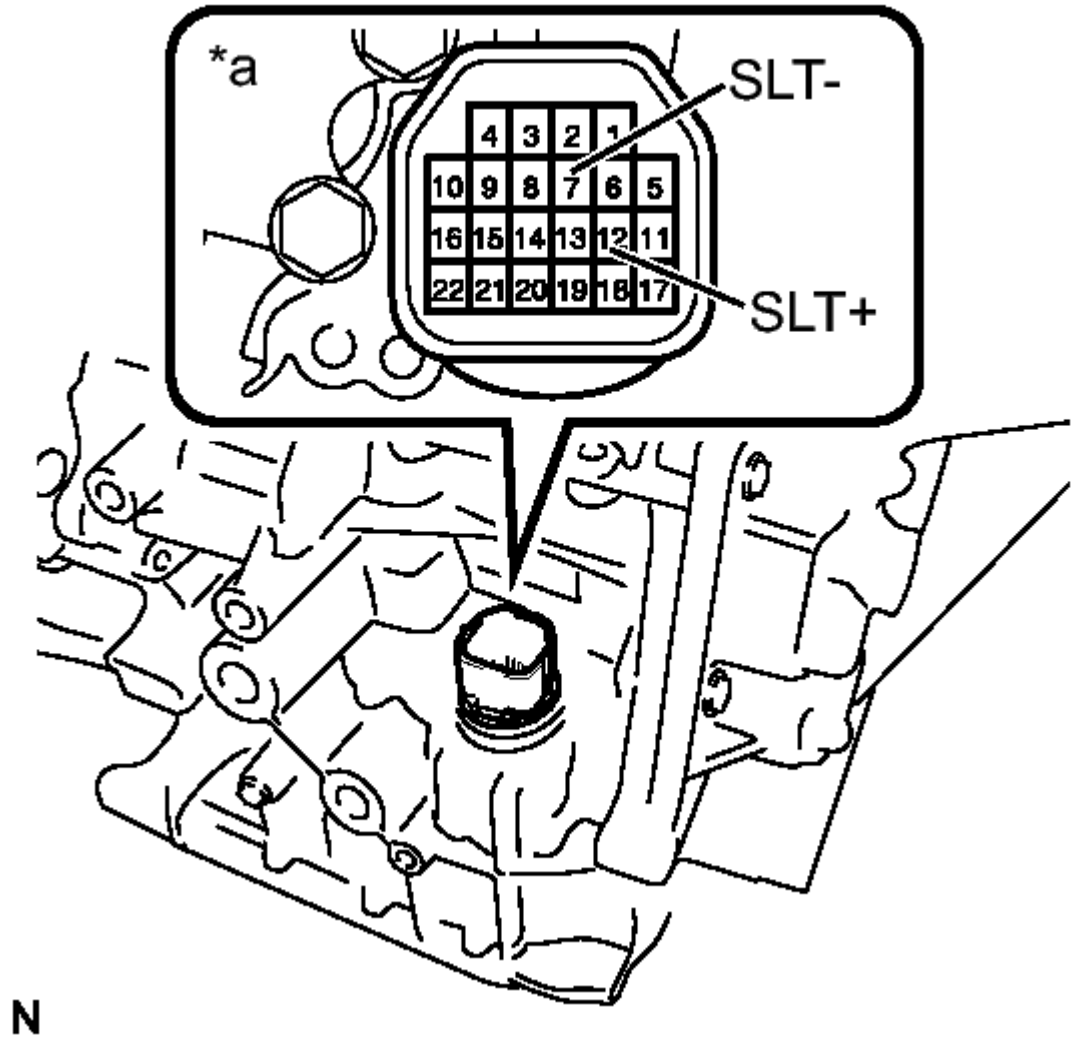

Fig. 55: Inspecting Transmission Wire (Shift Solenoid Valve SLT)
Courtesy of TOYOTA MOTOR SALES, U.S.A., INC.

b. Measure the resistance according to the value(s) in the table below.

Standard Resistance

Tester Connection	Condition	Specified Condition
12 (SLT+) - 7 (SLT-)	20°C (68° F)	5.0 to 5.6 ohms
12 (SLT+) - Body ground	Always	10 kohms or higher
7 (SLT-) - Body	Always	10 kohms

ground		or higher
12 (SLT+) - All other terminals except 7 (SLT-)	Always	10 kohms or higher
7 (SLT-) - All other terminals except 12 (SLT+)	Always	10 kohms or higher

TEXT IN ILLUSTRATION

*a	Component without harness connected: (Transmission Wire)

NG --> See step 2

OK --> See step 4

2. **INSPECT SHIFT SOLENOID VALVE SLT**
   a. Remove shift solenoid valve SLT.

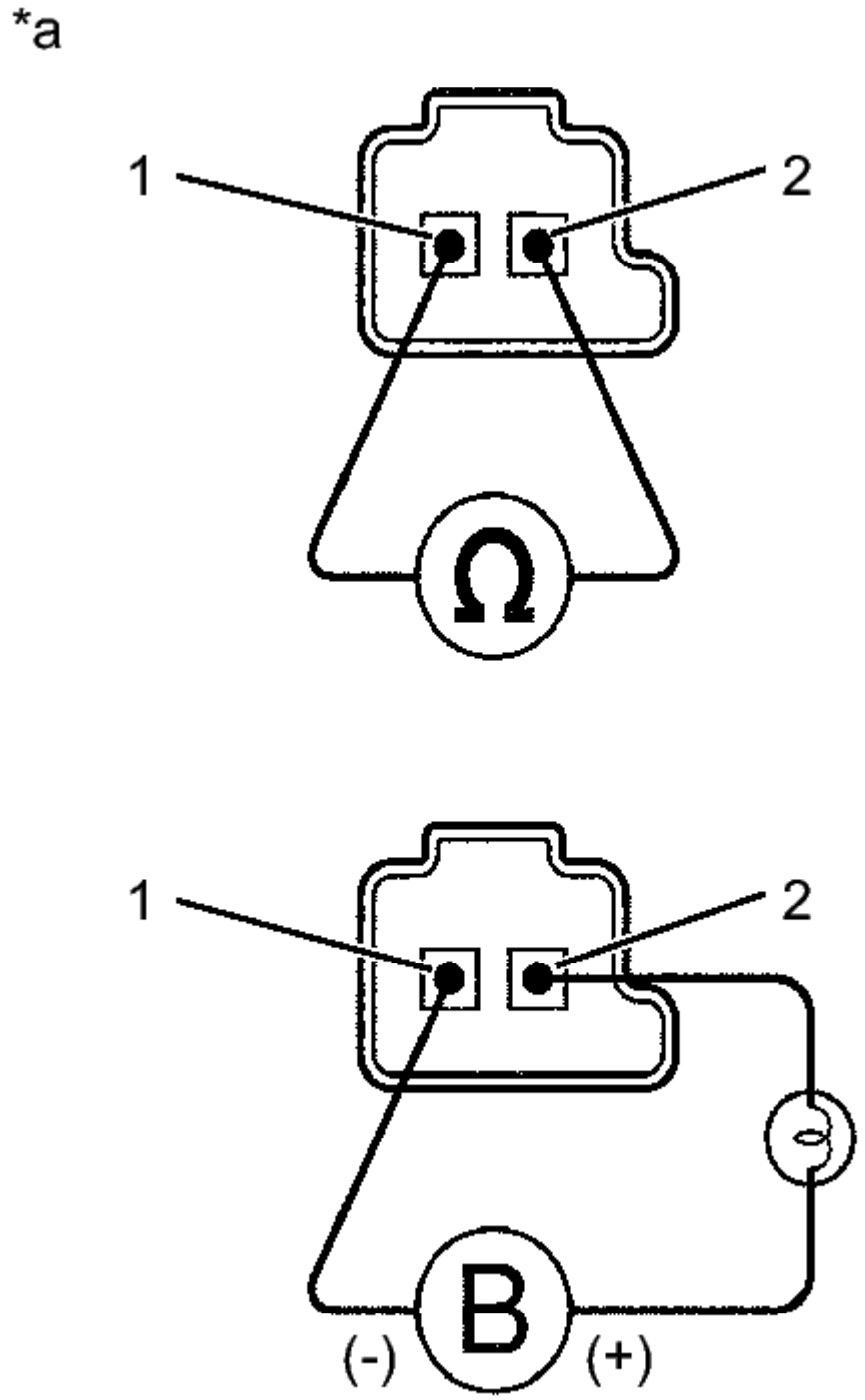

Fig. 56: Measuring Resistance Of Shift Solenoid Valve
Courtesy of TOYOTA MOTOR SALES, U.S.A., INC.

b. Measure the resistance according to the value(s) in the table below.

Standard Resistance

Tester Connection	Condition	Specified Condition
1 - 2	20°C (68° F)	5.0 to 5.6 ohms

TEXT IN ILLUSTRATION

*a	Component without harness connected: (Shift Solenoid Valve SLT)

c. Connect a battery positive (+) lead with a 21 W bulb to terminal 2 and a negative (-) lead to terminal 1 of the solenoid valve connector. Then check that the valve moves and makes an operating sound.

OK

Valve moves and makes an operating sound.

NG --> See step 5

OK --> See step 3

3. **REPLACE TRANSMISSION WIRE. Refer to REMOVAL**
4. **REPLACE TCM. Refer to REMOVAL**
5. **REPLACE SHIFT SOLENOID VALVE SLT. Refer to REMOVAL**

DTC P2757: TORQUE CONVERTER CLUTCH PRESSURE CONTROL SOLENOID PERFORMANCE (SHIFT SOLENOID VALVE SLU)

DESCRIPTION

The TCM uses the signals from the throttle position sensor, air-flow meter, input speed sensor (NT), output speed sensor (NC) and crankshaft position sensor (NE) to monitor the engagement condition of the lock-up clutch.

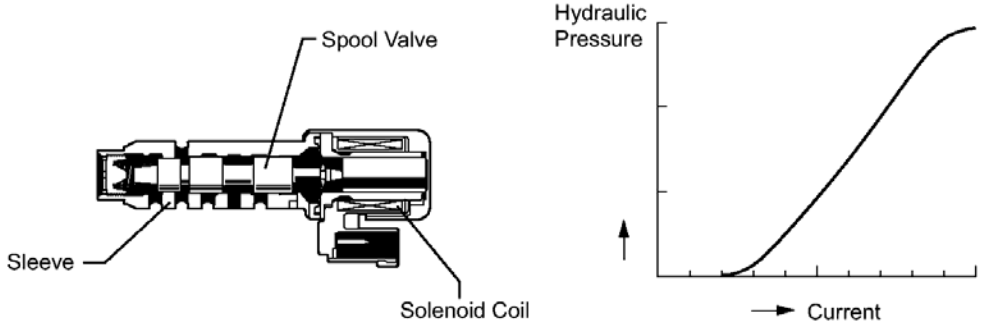

Fig. 57: Identifying Shift Solenoid Valve SLU Components And Hydraulic Line Pressure Graph
Courtesy of TOYOTA MOTOR SALES, U.S.A., INC.

The TCM compares the engagement condition of the lock-up clutch with the lock-up schedule in the TCM memory to detect shift solenoid valve SLU, valve body and torque converter clutch mechanical problems.

DTC No.	DTC Detection Condition	Trouble Area
P2757	When both of the following are detected (2 trip detection logic): • Lock-up does not occur when requested. • No. 3 ATF pressure switch is OFF. When both of the following are detected (2 trip detection logic): • No. 3 ATF pressure switch is ON when lock-up does not occur. • Lock-up occurs when shift solenoid valve SLU is requested to turn on in the lock-up range.	• Shift solenoid valve SLU remains open or closed • Valve body is blocked • Torque converter assembly • Automatic transaxle (clutch, brake or gear, etc.) • Line pressure is too low

MONITOR DESCRIPTION

Torque converter lock-up is controlled by the TCM based on the speed sensor (NT), speed sensor (NC), engine speed (NE), engine load, engine temperature, vehicle speed, automatic transmission fluid (ATF) temperature, and gear selection. The TCM determines the lock-up status of the torque converter by comparing the engine speed (NE) to the input speed (NT). The TCM calculates the actual transmission gear by comparing input speed (NT) to output speed (NC). When conditions are appropriate, the TCM requests "lock-up" by applying control voltage to shift solenoid SLU. When SLU is turned on, it applies pressure to the lock-up relay valve and locks the torque converter assembly.

If the TCM detects no lock-up after lock-up has been requested or if it detects lock-up when it is not requested, the TCM interprets this as a fault in shift solenoid valve SLU or lock-up system performance.

The TCM will turn on the MIL and store the DTC.

Example:

When any of the following is met, the system judges it as a malfunction.

- There is a difference in rotation (speed) between the input side (engine speed) and output side (input turbine speed) of the torque converter when the TCM commands lock-up.

  (Engine speed is at least 70 RPM greater than input turbine speed.)

- There is no difference in rotation (speed) between the input side (engine speed) and output side (input turbine speed) of the torque converter when the TCM commands lock-up off.

  (The difference between engine speed and input turbine speed is less than 20 RPM.)

MONITOR STRATEGY

Related DTCs	P2757: Shift solenoid valve SLU OFF malfunction Shift solenoid valve SLU ON malfunction
Required sensors/Components	Shift solenoid valve SLU
Frequency of operation	Continuous
Duration	OFF malfunction (a): 3.5 seconds OFF malfunction (b): 0.05 seconds ON malfunction (a): 1.8 seconds ON malfunction (b): 0.6 seconds
MIL operation	2 driving cycles
Sequence of operation	None

TYPICAL ENABLING CONDITIONS

THE FOLLOWING ITEMS ARE COMMON TO ALL CONDITIONS BELOW.

The monitor will run whenever this DTC is not	P0712, P0713 (ATF temperature sensor circuit (TFT sensor)) P0115, P0117, P0118 (ECT sensor circuit) P0715, P0717 (Input speed sensor (NT) circuit) P0791, P0793 (Output speed sensor (NC) circuit) P0748 (Shift solenoid valve SL1 circuit) P0778 (Shift solenoid valve SL2 circuit) P0798 (Shift solenoid valve SL3 circuit)

present. (Not circuit malfunction)	P2810 (Shift solenoid valve SL4 circuit) P2759 (Shift solenoid valve SLU circuit) P2769, P2770 (Shift solenoid valve SL circuit) P0327, P0328, P0332, P0333 (KCS sensor circuit) P0120, P0121, P0122, P0123, P0220, P0222, P0223, P0604, P0606, P060A, P060B, P060D, P060E, P0657, P1607, P2102, P2103, P2111, P2112, P2118, P2119, P2135 ((ETCS) Electronic throttle control system) U0100 (CAN communication system)
Engine coolant temperature	40°C (104°F) or more
Spark advance from Max. retard timing by KCS control	0°CA or more
Transmission range	D
TFT (Transmission fluid temperature)	-10°C (14°F) or more
TFT (Transmission fluid temperature) sensor circuit	No circuit malfunction
ECT (Engine coolant temperature) sensor circuit	No circuit malfunction
Input speed sensor (NT) circuit	No circuit malfunction
Output speed sensor (NC) circuit	No circuit malfunction
Shift solenoid valve SL1 circuit	No circuit malfunction
Shift solenoid valve SL2 circuit	No circuit malfunction
Shift solenoid valve SL3 circuit	No circuit malfunction
Shift solenoid valve SL4 circuit	No circuit malfunction
Shift solenoid valve SLU circuit	No circuit malfunction
Shift solenoid valve SL circuit	No circuit malfunction
KCS (Knock control sensor circuit)	No circuit malfunction
(ETCS) Electronic throttle control system	Not system down
CAN communication system	Not system down
Engine	Starting
TCM selected gear	Not 1st
Vehicle speed	25 km/h (15.5 mph) or more
Input speed (NT) / Output speed (NO) with 1st	3.304 to 7.724
Input speed (NT) / Output speed (NO) with 2nd	1.901 to 2.340
Input speed (NT) / Output speed (NO) with 3rd	1.399 to 1.649
Input speed (NT) / Output speed (NO) with 4th	0.998 to 1.138
Input speed (NT) / Output speed (NO) with 5th	0.705 to 0.836
Input speed (NT) / Output speed (NO) with 6th	0.568 to 0.695

OFF MALFUNCTION:

TCM lock-up command	ON
Duration time from lock-up on command	3 seconds or more
Shift solenoid valve SLU	Not ON malfunction

ON MALFUNCTION:

TCM lock-up command	OFF (SLU pressure: less than 4 kPa (0.04 kgf/cm^2 , 0.6 psi)
Duration time from lock-up on command	0.064 seconds or more
Throttle valve opening angle	7% or more
Vehicle speed	Less than 60 km/h (37.3 mph)
Shift solenoid valve SLU	Not malfunction (P2757)
Shift solenoid valve SL	Not OFF malfunction (P0741)
No. 3 ATF pressure switch	Not ON malfunction (P0990)

TYPICAL MALFUNCTION THRESHOLDS

OFF MALFUNCTION:

Following conditions are met	(a) and (b)
(a) Engine speed (NE) - Input speed (NT)	70 RPM or more
(b) No. 3 ATF pressure switch	OFF

ON MALFUNCTION:

Following conditions are met	(a) and (b)
(a) Engine speed (NE) - Input speed (NT)	Less than 35 RPM
(b) No. 3 ATF pressure switch	ON

COMPONENT OPERATING RANGE

Input speed sensor (NT)	Input speed is equal to engine speed when lock-up is ON.

INSPECTION PROCEDURE

NOTE: **Perform the universal trip to clear permanent DTCs. Refer to DTC CHECK / CLEAR .**

HINT:

Using the Techstream to perform Active Tests allows relays, VSVs, actuators and other items to be operated without removing any parts. This non-intrusive functional inspection can be very useful because intermittent operation may be discovered before parts or wiring is disturbed. Performing Active Tests early in troubleshooting is one way to save diagnostic time. Data List information can be displayed while performing Active Tests.

1. **ACTIVE TEST**

a. Warm up the engine.
b. Turn the ignition switch off.
c. Connect the Techstream to the DLC3.
d. Turn the ignition switch to ON.
e. Turn the Techstream on.
f. Enter the following menus: Powertrain / ECT / Active Test.
g. According to the display on the Techstream, perform the Active Test.

ECT

Tester Display	Test Part	Control Range	Diagnostic Note
Activate the Lock Up	Control the shift solenoid SLU and SL to set the automatic transaxle to the lock-up condition.	ON/OFF	Can be used to check SLU and SL solenoid operation. [Vehicle Condition] Vehicle speed: 60 km/h (37 mph) or more

HINT:

This test can be conducted when the vehicle speed is 60 km/h (37 mph) or more.

h. Lightly depress the accelerator pedal and check that the engine speed does not change abruptly.

HINT:

- When changing the accelerator pedal opening angle while driving, if the engine speed does not change, lock-up is on.
- Slowly release, but not fully, the accelerator pedal in order to decelerate. (Fully releasing the pedal will close the throttle valve and lock-up may be turned off.)

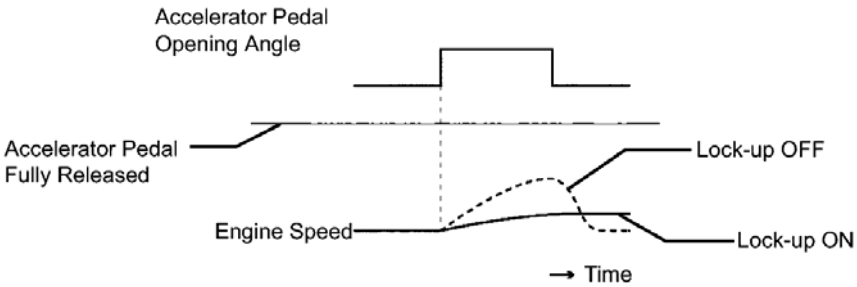

G23400

Fig. 58: Accelerator Pedal Opening Angle Graph
Courtesy of TOYOTA MOTOR SALES, U.S.A., INC.

PROCEDURE

1. **CHECK OTHER DTCS OUTPUT (IN ADDITION TO DTC P2757)**
   a. Connect the Techstream to the DLC3.
   b. Turn the ignition switch to ON.
   c. Turn the Techstream on.
   d. Enter the following menus: Powertrain / ECT / Trouble Codes.
   e. Read the DTCs using the Techstream.

   RESULT

Result	Proceed to
Only P2757 is output	A
P2757 and other DTCs are output	B

   HINT:

   If any other codes besides P2757 are output, perform troubleshooting for those DTCs first.

B --> See step 6

A: Go to next step

2. **INSPECT SHIFT SOLENOID VALVE SLU**
   a. Remove shift solenoid valve SLU.

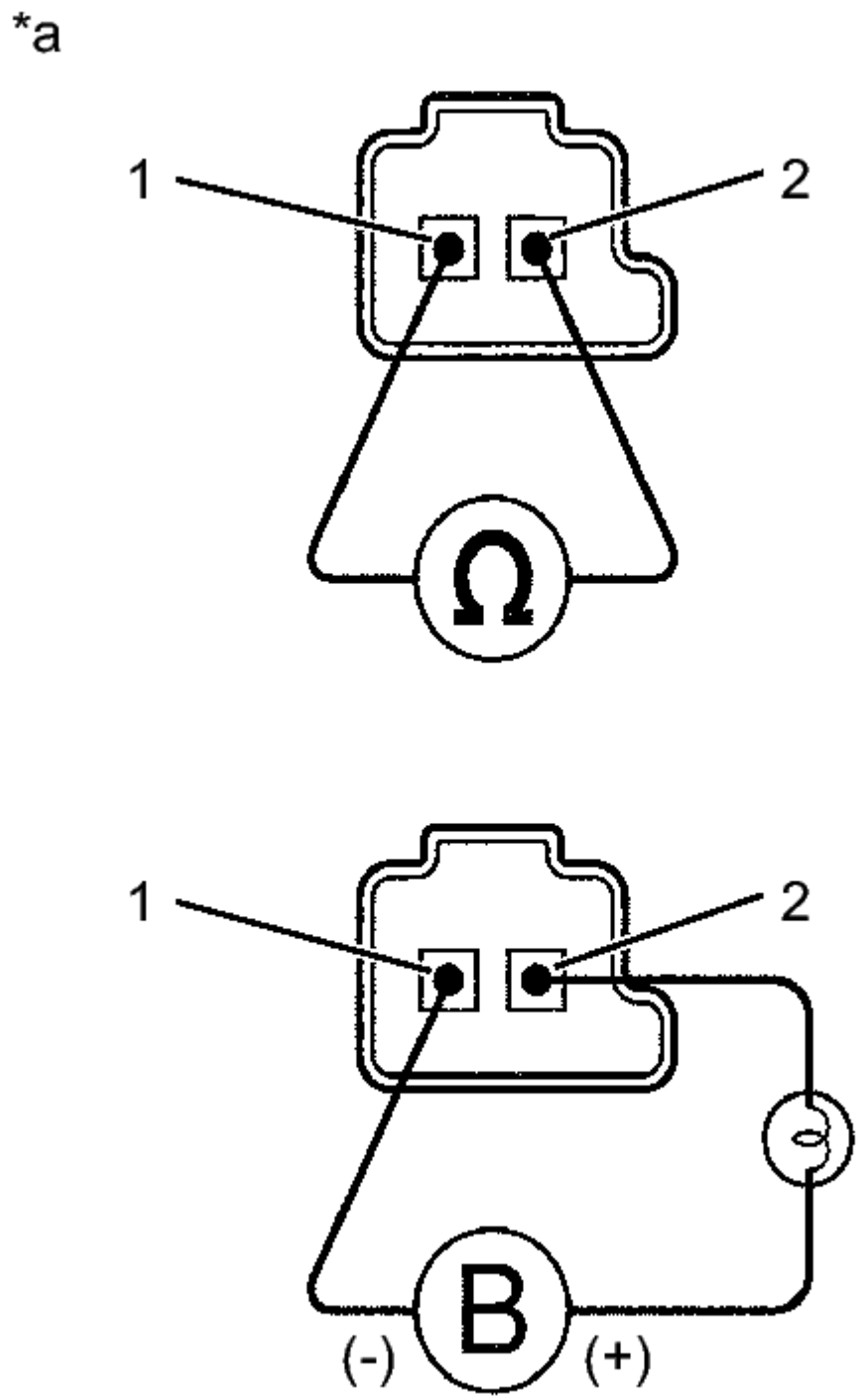

Fig. 59: Measuring Resistance Of Shift Solenoid Valve
Courtesy of TOYOTA MOTOR SALES, U.S.A., INC.

b. Measure the resistance according to the value(s) in the table below.

Standard Resistance

Tester Connection	Condition	Specified Condition
1 - 2	20°C (68° F)	5.0 to 5.6 ohms

TEXT IN ILLUSTRATION

*a	Component without harness connected: (Shift Solenoid Valve SLU)

c. Connect a battery positive (+) lead with a 21 W bulb to terminal 2 and a negative (-) lead to terminal 1 of the solenoid valve connector. Then check that the valve moves and makes an operating sound.

OK

Valve moves and makes an operating sound.

NG --> See step 7

OK: Go to next step

3. **INSPECT TRANSMISSION VALVE BODY ASSEMBLY**
   a. Check the transmission valve body assembly. Refer to **REMOVAL** .

OK

There are no foreign objects on each valve and they operate smoothly.

NG --> See step 8

OK: Go to next step

4. **INSPECT TORQUE CONVERTER ASSEMBLY**
   a. Check the torque converter assembly. Refer to **INSPECTION** .

OK

The torque converter assembly operates normally.

NG --> See step 9

OK --> See step 5

5. **REPLACE AUTOMATIC TRANSMISSION ASSEMBLY. Refer to REMOVAL**
6. **GO TO DTC CHART. Refer to DIAGNOSTIC TROUBLE CODE CHART**
7. **REPLACE SHIFT SOLENOID VALVE SLU. Refer to REMOVAL**
8. **REPAIR OR REPLACE TRANSMISSION VALVE BODY ASSEMBLY. Refer to REMOVAL**
9. **REPLACE TORQUE CONVERTER ASSEMBLY. Refer to REMOVAL**

DTC P2759: TORQUE CONVERTER CLUTCH PRESSURE CONTROL SOLENOID CONTROL CIRCUIT ELECTRICAL (SHIFT SOLENOID VALVE SLU)

DESCRIPTION

Refer to the system description for DTC P2757. Refer to **DESCRIPTION**

DTC No.	DTC Detection Condition	Trouble Area
P2759	Open or short is detected in shift solenoid valve SLU circuit for 1 second or more while driving (1 trip detection logic).	• Open or short in shift solenoid valve SLU circuit • Shift solenoid valve SLU • Transmission wire • TCM

MONITOR DESCRIPTION

When an open or short in a shift solenoid valve (SLU) circuit is detected, the TCM determines there is a malfunction. The TCM will turn on the MIL and store this DTC.

MONITOR STRATEGY

Related DTCs	P2759: Shift solenoid valve SLU/Range check
Required sensors/Components	Shift solenoid valve SLU
Frequency of operation	Continuous
Duration	1 second
MIL operation	Immediately
Sequence of operation	None

TYPICAL ENABLING CONDITIONS

ALL

The monitor will run whenever the following DTCs are not	

present	None
Ignition switch	ON
Starter	OFF

CONDITION (A)

Battery voltage	12 V or more

CONDITION (B)

Battery voltage	10 V or more and less than 12 V
CPU commanded duty	Less than 75%

TYPICAL MALFUNCTION THRESHOLDS

ALL

Output signal duty	100% or more

COMPONENT OPERATING RANGE

Output signal duty	More than 3% and less than 100%

WIRING DIAGRAM

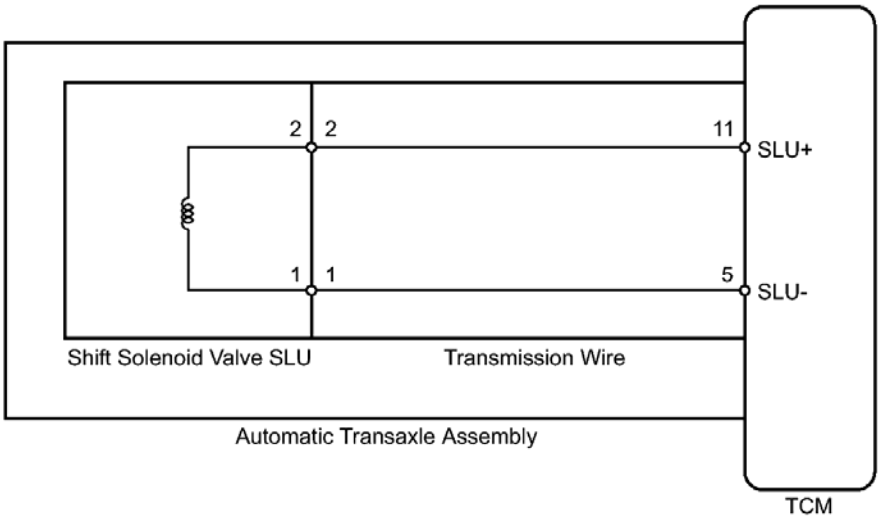

Fig. 60: Torque Converter Clutch Pressure Control Solenoid Control Circuit - Wiring Diagram
Courtesy of TOYOTA MOTOR SALES, U.S.A., INC.

INSPECTION PROCEDURE

NOTE: **Perform the universal trip to clear permanent DTCs. Refer to DTC CHECK / CLEAR .**

PROCEDURE

1. **INSPECT TRANSMISSION WIRE (SHIFT SOLENOID VALVE SLU)**
   a. Remove the TCM from the transaxle.

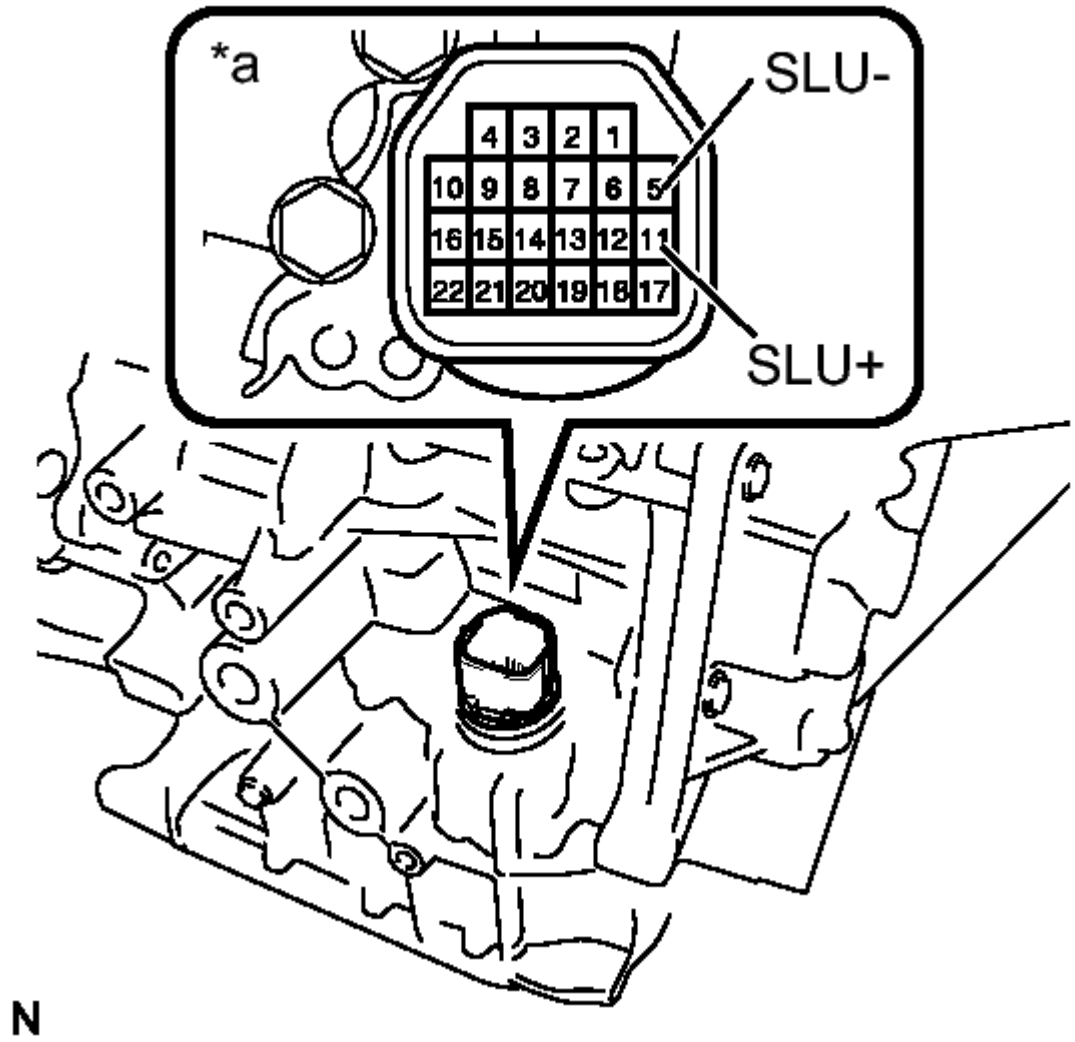

Fig. 61: Inspecting Transmission Wire (Shift Solenoid Valve SLU)
Courtesy of TOYOTA MOTOR SALES, U.S.A., INC.

   b. Measure the resistance according to the value(s) in the table below.

   Standard Resistance

Tester Connection	Condition	Specified Condition
11 (SLU+) - 5 (SLU-)	20°C (68°F)	5.0 to 5.6 ohms
11 (SLU+) - Body ground or other terminals	Always	10 kohms or higher
5 (SLU-) - Body ground or other terminals	Always	10 kohms or higher
11 (SLU+) - All other terminals except 5 (SLU-)	Always	10 kohms or higher
5 (SLU-) - All other terminals except 11 (SLU+)	Always	10 kohms or higher

TEXT IN ILLUSTRATION

*a	Component without harness connected: (Transmission Wire)

NG --> See step 2

OK --> See step 4

2. **INSPECT SHIFT SOLENOID VALVE SLU**
   a. Remove shift solenoid valve SLU.

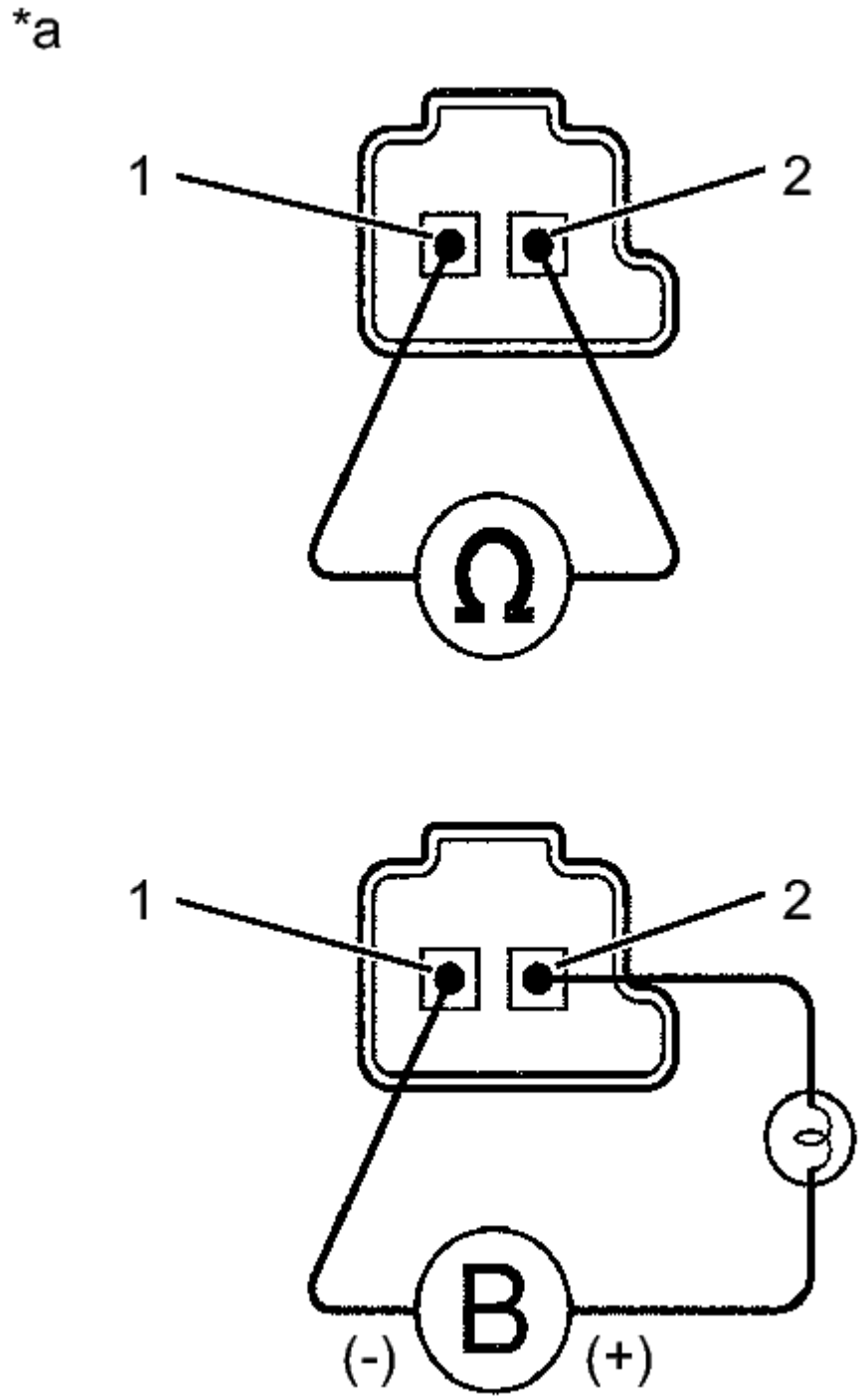

Fig. 62: Measuring Resistance Of Shift Solenoid Valve
Courtesy of TOYOTA MOTOR SALES, U.S.A., INC.

b. Measure the resistance according to the value(s) in the table below.

Standard Resistance

Tester Connection	Condition	Specified Condition
1 - 2	20°C (68° F)	5.0 to 5.6 ohms

TEXT IN ILLUSTRATION

*a	Component without harness connected: (Shift Solenoid Valve SLU)

c. Connect a battery positive (+) lead with a 21 W bulb to terminal 2 and a negative (-) lead to terminal 1 of the solenoid valve connector. Then check that the valve moves and makes an operating sound.

OK

Valve moves and makes an operating sound.

NG --> See step 5

OK --> See step 3

3. **REPLACE TRANSMISSION WIRE. Refer to REMOVAL**
4. **REPLACE TCM. Refer to REMOVAL**
5. **REPLACE SHIFT SOLENOID VALVE SLU. Refer to REMOVAL**

DTC P2769: SHORT IN TORQUE CONVERTER CLUTCH SOLENOID CIRCUIT (SHIFT SOLENOID VALVE SL); DTC P2770: OPEN IN TORQUE CONVERTER CLUTCH SOLENOID CIRCUIT (SHIFT SOLENOID VALVE SL)

DESCRIPTION

Shift solenoid valve SL is turned on and off by signals from the TCM to control the hydraulic pressure acting on the lock-up relay valve, which then controls operation of the lock-up clutch.

DTC No.	DTC Detection Condition	Trouble Area
P2769	TCM detects a short in the shift solenoid valve SL circuit when the shift solenoid valve	• Short in shift solenoid valve SL circuit • Shift solenoid valve SL

	SL is operated (2 trip detection logic).	• Transmission wire • TCM
P2770	TCM detects an open in the shift solenoid valve SL circuit when the shift solenoid valve SL is not operated (2 trip detection logic).	• Open in shift solenoid valve SL circuit • Shift solenoid valve SL • Transmission wire • TCM

Fail-safe function:

If the TCM detects a malfunction, it turns shift solenoid valve SL off.

MONITOR DESCRIPTION

Based on the signals from the throttle position sensor, the air flow meter and the crankshaft position sensor, the TCM sends a signal to shift solenoid valve SL to regulate the hydraulic pressure and provide smoother torque converter clutch engagement. Shift solenoid valve SL responds to commands from the TCM. The valve controls the lock-up relay valve to perform the torque-converter lock-up function. If the TCM detects an open or short circuit for shift solenoid valve SL, it will illuminate the MIL.

MONITOR STRATEGY

Related DTCs	P2769: Shift solenoid valve SL/Range check (Low resistance) P2770: Shift solenoid valve SL/Range check (High resistance)
Required sensors/Components	Shift solenoid valve SL
Frequency of operation	Continuous
Duration	1 time
MIL operation	2 driving cycles
Sequence of operation	None

TYPICAL ENABLING CONDITIONS

P2769: RANGE CHECK (LOW RESISTANCE):

The monitor will run whenever the following DTCs are not present	None
Shift solenoid valve SL	ON
Time after solenoid OFF to ON	More than 0.008 seconds

P2770: RANGE CHECK (HIGH RESISTANCE):

The monitor will run whenever the following DTCs are not present	None
Shift solenoid valve SL	OFF

Time after solenoid ON to OFF	More than 0.008 seconds

TYPICAL MALFUNCTION THRESHOLDS

P2769: RANGE CHECK (LOW RESISTANCE):

Intelligent power MOS diagnosis fail signals detected while the solenoid is operated	Fail at solenoid resistance: 8 ohms or less

P2770: RANGE CHECK (HIGH RESISTANCE):

Intelligent power MOS diagnosis fail signals detected while the solenoid is not operated	Fail at solenoid resistance: 100 kohms or more

COMPONENT OPERATING RANGE

Shift solenoid valve SL	Resistance: 11 to 15 ohms at 20°C (68°F)

WIRING DIAGRAM

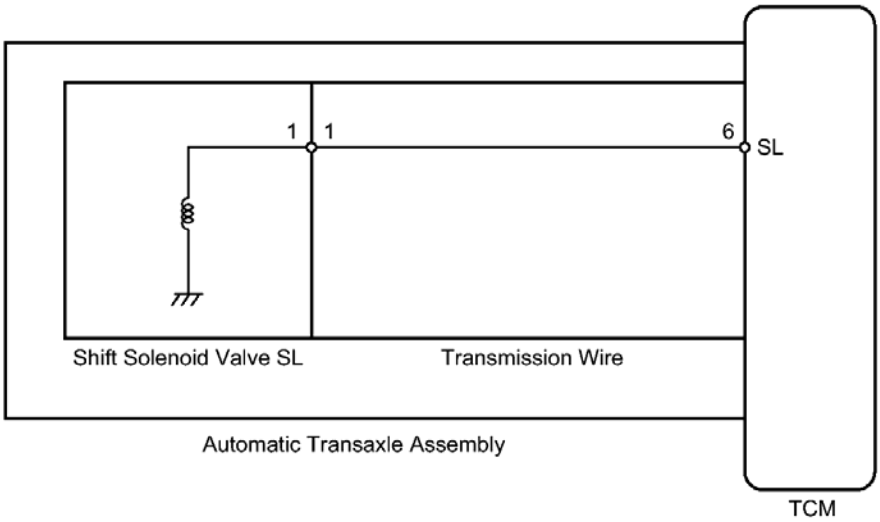

Fig. 63: Torque Converter Clutch Solenoid Circuit - Wiring Diagram
Courtesy of TOYOTA MOTOR SALES, U.S.A., INC.

INSPECTION PROCEDURE

NOTE: **Perform the universal trip to clear permanent DTCs. Refer to DTC CHECK / CLEAR .**

PROCEDURE

1. **INSPECT TRANSMISSION WIRE (SHIFT SOLENOID VALVE SL)**

a. Remove the TCM from the transaxle.

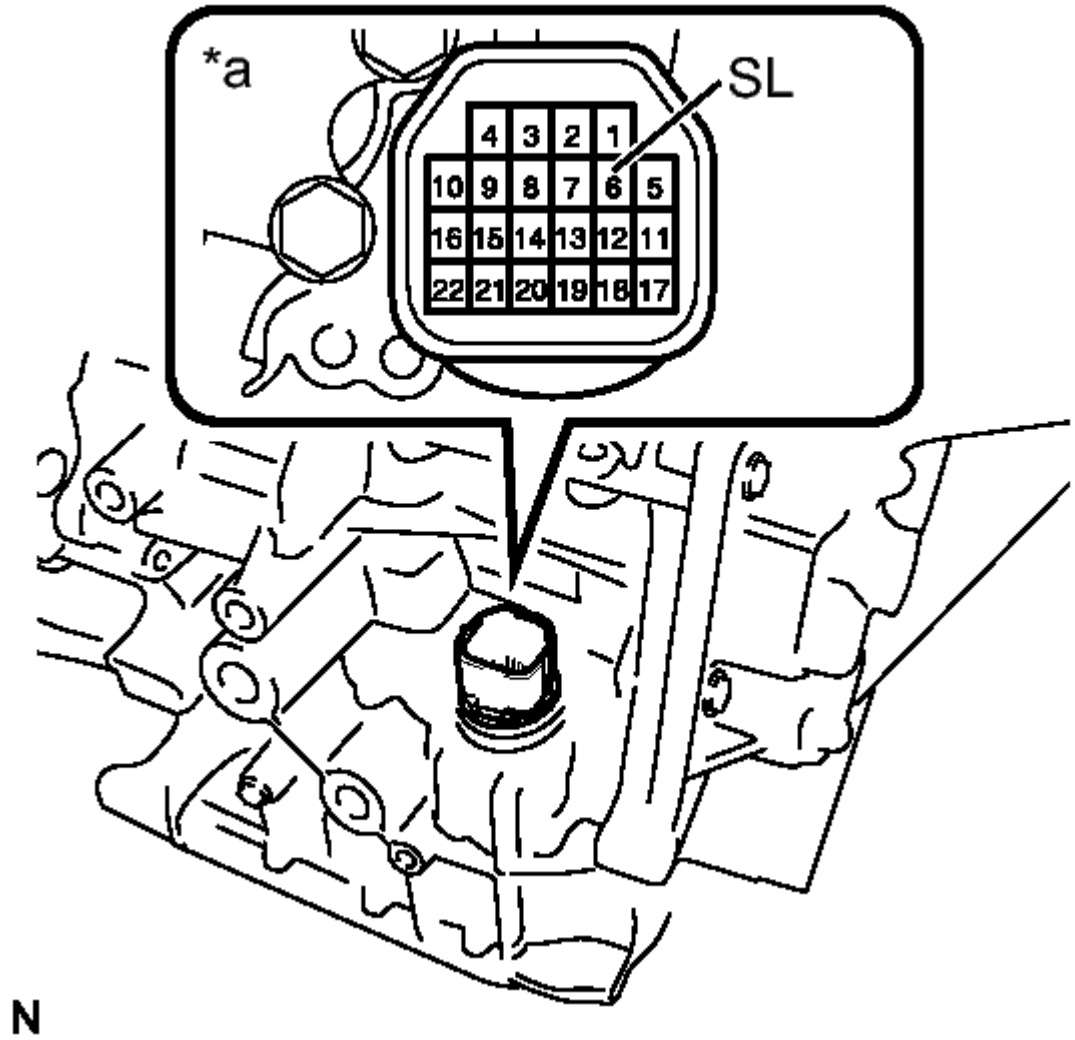

Fig. 64: Inspecting Transmission Wire (Shift Solenoid Valve SL)
Courtesy of TOYOTA MOTOR SALES, U.S.A., INC.

b. Measure the resistance according to the value(s) in the table below.

Standard Resistance

Tester Connection	Condition	Specified Condition
6 (SL) - Body ground	20°C (68°F)	11 to 15 ohms

TEXT IN ILLUSTRATION

*a	Component without harness connected: (Transmission Wire)

NG --> See step 2

OK --> See step 4

2. **INSPECT SHIFT SOLENOID VALVE SL**
   a. Remove shift solenoid valve SL.

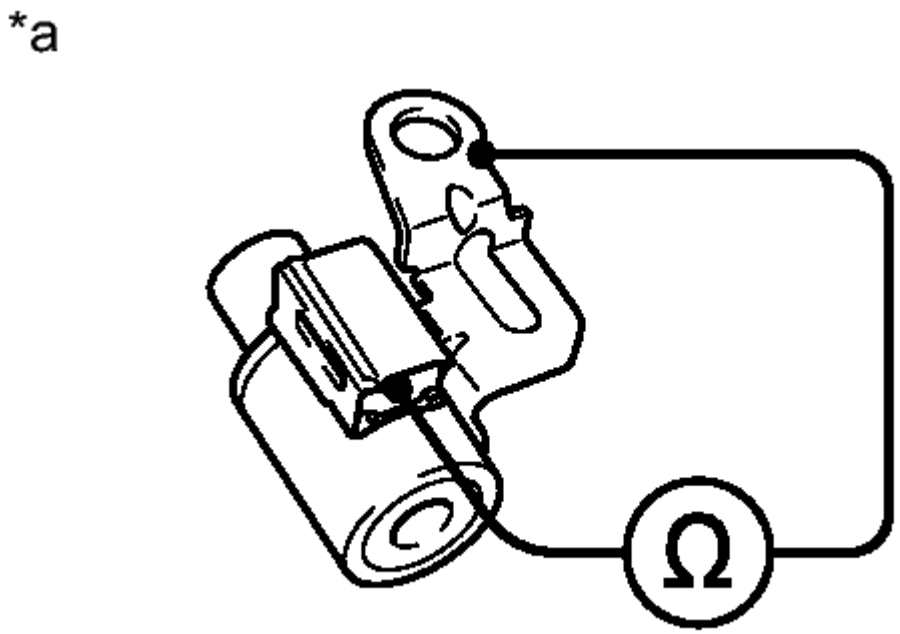

Fig. 65: Inspecting Shift Solenoid Valve SL (Resistance)
Courtesy of TOYOTA MOTOR SALES, U.S.A., INC.

   b. Measure the resistance according to the value(s) in the table below.

   Standard Resistance

Tester Connection	Condition	Specified Condition
Solenoid Connector	20°C (68°	11 to 15

(SL) - Solenoid Body (SL)	F)	ohms

TEXT IN ILLUSTRATION

*a	Component without harness connected: (Shift Solenoid Valve SL)

NG --> See step 5

OK --> See step 3

3. **REPLACE TRANSMISSION WIRE. Refer to REMOVAL**
4. **REPLACE TCM. Refer to REMOVAL**
5. **REPLACE SHIFT SOLENOID VALVE SL. Refer to REMOVAL**

DTC P2808: PRESSURE CONTROL SOLENOID "G" PERFORMANCE (SHIFT SOLENOID VALVE SL4)

DESCRIPTION

The TCM uses the vehicle speed signal and signals from the transmission speed sensors (NC, NT) to detect the actual gear (1st, 2nd, 3rd, 4th, 5th or 6th gear).

Then the TCM compares the actual gear with the shift schedule in the TCM memory to detect mechanical problems of the shift solenoid valves and valve body.

DTC No.	DTC Detection Condition	Trouble Area
P2808	The engine revs freely when 3rd or 5th gear is commanded. (2 trip detection logic) When any of the following is detected. In addition, the condition that 4th gear is engaged when 4th gear is commanded occurs twice. (2 trip detection logic) • When 1st gear is commanded, 3rd gear is engaged. • When 2nd gear is commanded, 3rd gear is engaged. • When 6th gear is commanded, 5th gear is engaged.	• Shift solenoid valve SL4 remains open or closed • Valve body is blocked • Automatic transaxle (clutch, brake or gear etc.)

MONITOR DESCRIPTION

The TCM commands gear shifts by turning the shift solenoid valves on and off. According to the engine speed (NE), input speed (NT) and output speed (NC), the TCM detects the actual gear (1st, 2nd, 3rd, 4th, 5th or 6th gear). When the gear commanded by the TCM and the actual gear are not the same, the TCM illuminates the MIL and stores the DTC.

MONITOR STRATEGY

Related DTCs	P2808: Shift solenoid valve SL4/OFF malfunction Shift solenoid valve SL4/ON malfunction
Required sensors/Components	Shift solenoid valve SL4, Input speed sensor (NT), Output speed sensor (NC), Crankshaft position sensor (NE)
Frequency of operation	Continuous
Duration	OFF malfunction (A): 0.5 seconds OFF malfunction (B): 0.8 seconds ON malfunction: 0.8 seconds
MIL operation	2 driving cycles
Sequence of operation	None

TYPICAL ENABLING CONDITIONS

ALL:

The monitor will run whenever this DTC is not present. (Not circuit malfunction)	P0712, P0713 (ATF temperature sensor circuit (TFT sensor)) P0115, P0117, P0118 (ECT sensor circuit) P0715, P0717 (Input speed sensor (NT) circuit) P0791, P0793 (Output speed sensor (NC) circuit) P0748 (Shift solenoid valve SL1 circuit) P0778 (Shift solenoid valve SL2 circuit) P0798 (Shift solenoid valve SL3 circuit) P2810 (Shift solenoid valve SL4 circuit) P0327, P0328, P0332, P0333 (KCS sensor circuit) P0120, P0121, P0122, P0123, P0220, P0222, P0223, P0604, P0606, P060A, P060B, P060D, P060E, P0657, P1607, P2102, P2103, P2111, P2112, P2118, P2119, P2135 ((ETCS) Electronic throttle control system) U0100 (CAN communication system)
Transmission range	D
TFT (Transmission fluid temperature)	-10°C (14°F) or more
TFT (Transmission fluid temperature) sensor circuit	No circuit malfunction

ECT (Engine coolant temperature) sensor circuit	No circuit malfunction
Input speed sensor (NT) circuit	No circuit malfunction
Output speed sensor (NC) circuit	No circuit malfunction
Shift solenoid valve SL1 circuit	No circuit malfunction
Shift solenoid valve SL2 circuit	No circuit malfunction
Shift solenoid valve SL3 circuit	No circuit malfunction
Shift solenoid valve SL4 circuit	No circuit malfunction
KCS (Knock control sensor circuit)	No circuit malfunction
(ETCS) Electronic throttle control system	Not system down
CAN communication system	Not system down
Engine	Starting

OFF MALFUNCTION (A):

TCM select gear	3rd or 5th
Throttle valve opening angle	3% or more

OFF MALFUNCTION (B):

TCM select gear	3rd
Throttle valve opening angle	4.5% or more
Vehicle speed	2 km/h (1.2 mph) or more
Engine coolant temperature	40°C (104°F) or more
Input speed (NT) / Output speed (NO) with 1st	3.304 to 7.724
Input speed (NT) / Output speed (NO) with 2nd	1.901 to 2.340
Input speed (NT) / Output speed (NO) with 3rd	1.399 to 1.649
Input speed (NT) / Output speed (NO) with 4th	0.998 to 1.138
Input speed (NT) / Output speed (NO) with 5th	0.705 to 0.836
Input speed (NT) / Output speed (NO) with 6th	0.568 to 0.695

ON MALFUNCTION (A):

TCM select gear	1st
Time after transmission to 1st gear	0.1 seconds or more
Vehicle speed	2 to 40 km/h (1.2 to 24.9 mph)
Engine coolant temperature	40°C (104°F) or more
Input speed (NT) / Output speed (NO) with 1st	3.304 to 7.724
Input speed (NT) / Output speed (NO) with 2nd	1.901 to 2.340
Input speed (NT) / Output speed (NO) with 3rd	1.399 to 1.649
Input speed (NT) / Output speed (NO) with 4th	0.998 to 1.138
Input speed (NT) / Output speed (NO) with 5th	0.705 to 0.836
Input speed (NT) / Output speed (NO) with 6th	0.568 to 0.695

ON MALFUNCTION (B):

TCM select gear	2nd
Throttle valve opening angle	4.5% or more at engine speed 2000 RPM (condition varies with engine speed)
Vehicle speed	2 km/h (1.2 mph) or more
Engine coolant temperature	40°C (104°F) or more
Input speed (NT) / Output speed (NO) with 1st	3.304 to 7.724
Input speed (NT) / Output speed (NO) with 2nd	1.901 to 2.340
Input speed (NT) / Output speed (NO) with 3rd	1.399 to 1.649
Input speed (NT) / Output speed (NO) with 4th	0.998 to 1.138
Input speed (NT) / Output speed (NO) with 5th	0.705 to 0.836
Input speed (NT) / Output speed (NO) with 6th	0.568 to 0.695

ON MALFUNCTION (C):

TCM select gear	6th
Throttle valve opening angle	4.5% or more at engine speed 2000 RPM (condition varies with engine speed)
Vehicle speed	2 km/h (1.2 mph) or more
Engine coolant temperature	40°C (104°F) or more
Input speed (NT) / Output speed (NO) with 1st	3.304 to 7.724
Input speed (NT) / Output speed (NO) with 2nd	1.901 to 2.340
Input speed (NT) / Output speed (NO) with 3rd	1.399 to 1.649
Input speed (NT) / Output speed (NO) with 4th	0.998 to 1.138
Input speed (NT) / Output speed (NO) with 5th	0.705 to 0.836
Input speed (NT) / Output speed (NO) with 6th	0.568 to 0.695

ON MALFUNCTION (D):

TCM select gear	4th
Throttle valve opening angle	4.5% or more at engine speed 2000 RPM (condition vary with engine speed)
Vehicle speed	2 km/h (1.2 mph) or more
Engine coolant temperature	40°C (104°F) or more
Input speed (NT) / Output speed (NO) with 1st	3.304 to 7.724
Input speed (NT) / Output speed (NO) with 2nd	1.901 to 2.340
Input speed (NT) / Output speed (NO) with 3rd	1.399 to 1.649
Input speed (NT) / Output speed (NO) with 4th	0.998 to 1.138
Input speed (NT) / Output speed (NO) with 5th	0.705 to 0.836
Input speed (NT) / Output speed (NO) with 6th	0.568 to 0.695

TYPICAL MALFUNCTION THRESHOLDS

OFF MALFUNCTION (A):

Input speed (NT) - Output speed (NC) x Gear ratio	1000 RPM or more

OFF MALFUNCTION (B):

Input speed (NT) / Output speed (NC)	3.304 to 7.724

ON MALFUNCTION (A) AND (B):

Input speed (NT) / Output speed (NC)	1.399 to 1.649

ON MALFUNCTION (C):

Input speed (NT) / Output speed (NC)	0.705 to 0.836

ON MALFUNCTION (D):

Input speed (NT) / Output speed (NC)	0.998 to 1.138

INSPECTION PROCEDURE

NOTE: **Perform the universal trip to clear permanent DTCs. Refer to DTC CHECK / CLEAR .**

PROCEDURE

1. **CHECK OTHER DTCS OUTPUT (IN ADDITION TO DTC P2808)**
   a. Connect the Techstream to the DLC3.
   b. Turn the ignition switch to ON.
   c. Turn the Techstream on.
   d. Enter the following menus: Powertrain / ECT / Trouble Codes.
   e. Read the DTCs using the Techstream.

RESULT

Result	Proceed to
P2808 and other DTCs are output	A
Only P2808 is output	B

HINT:

If a solenoid is stuck OFF, DTCs for several solenoids including the malfunctioning solenoid will be detected.

B --> See step 3

A: Go to next step

2. **PERFORM ACTIVE TEST USING TECHSTREAM (CONTROL THE SHIFT POSITION)**

NOTE: This test should always be performed with at least 2 people.

a. Warm up the engine.
b. Turn the ignition switch off.
c. Connect the Techstream to the DLC3.
d. Turn the ignition switch to ON.
e. Turn the Techstream on.
f. Enter the following menus: Powertrain / ECT / Active Test.
g. According to the display on the Techstream, perform the Active Test.

HINT:

Comparing the gear commanded by the Active Test with the actual gear enables confirmation of the problem. Refer to **FAIL-SAFE CHART** .

ECT

Tester Display	Test Part	Control Range	Diagnostic Note
Control the Shift Position	Operates the shift solenoid valves to allow gears to selected manually.	• Press "-->" button: Upshift occurs • Press "<--" button: Downshift occurs	Can be used to check the operation of the shift solenoid valves.

NOTE:

- **This test can be conducted when the vehicle is stopped.**
- **When shifting gears using the Active Test function, do not operate the accelerator pedal for 2 seconds before and after shifting gears.**

HINT:

The gear commanded by the TCM is shown in the Data List / Shift Status display on the Techstream.

h. Check the vehicle speed and the gear when the engine speed is 1000 RPM.

HINT:

Because the torque converter clutch has not engaged, it may be difficult to obtain the speeds specified in 4th, 5th, and 6th gear, however a difference of speed should still be evident following each gear change.

Standard

1st	2nd	3rd	4th	5th	6th
8 to 12 km/h (5 to 7.5 mph)	15 to 19 km/h (9.3 to 11.8 mph)	21 to 25 km/h (13.0 to 15.5 mph)	31 to 35 km/h (19.3 to 21.7 mph)	44 to 48 km/h (27.3 to 29.8 mph)	52 to 56 km/h (32.3 to 34.8 mph)

i. Compare the TCM commanded gear and the actual gear.

RESULT

Actuator Gear during Malfunction		TCM Commanded Gear						Proceed to
		1st	2nd	3rd	4th	5th	6th	
Shift solenoid SL1	Stuck ON	1st	2nd	3rd	4th	4th	4th	A
	Stuck OFF	N*1	N*1	N*1	N*1	5th	6th	
Shift solenoid SL2	Stuck ON	4th	4th	4th	4th	5th	6th	B
	Stuck OFF	1st	2nd	3rd	1st	N*1	N*1	
Shift solenoid SL3	Stuck ON	2nd	2nd	3rd	4th	5th	6th	C
	Stuck OFF	1st	1st	3rd	4th	5th	N*1	
Shift solenoid SL4	Stuck ON*3	3rd	3rd	3rd	4th	5th	5th	D
	Stuck OFF	1st	2nd	1st	4th	N*1	6th	
Shift solenoid SLT	Stuck ON	N*2	N*2	N*2	N*2	N*2	N*2	E
	Stuck OFF*3	1st	2nd	3rd	4th	5th	6th	

HINT:

- *1: Neutral
- *2: If shift solenoid SLT is stuck on, the line pressure will be low. Therefore, the amount of torque that can be transmitted by each gear is lower than the normal limit. When the engine power exceeds this lowered limit, the engine speed will increase freely.
- *3: When shift solenoid SLT is stuck off, gear shifting is normal.

A --> See step 6

B --> See step 7

C --> See step 8

E --> See step 9

D: Go to next step

3. **INSPECT SHIFT SOLENOID VALVE SL4**
    a. Remove shift solenoid valve SL4.

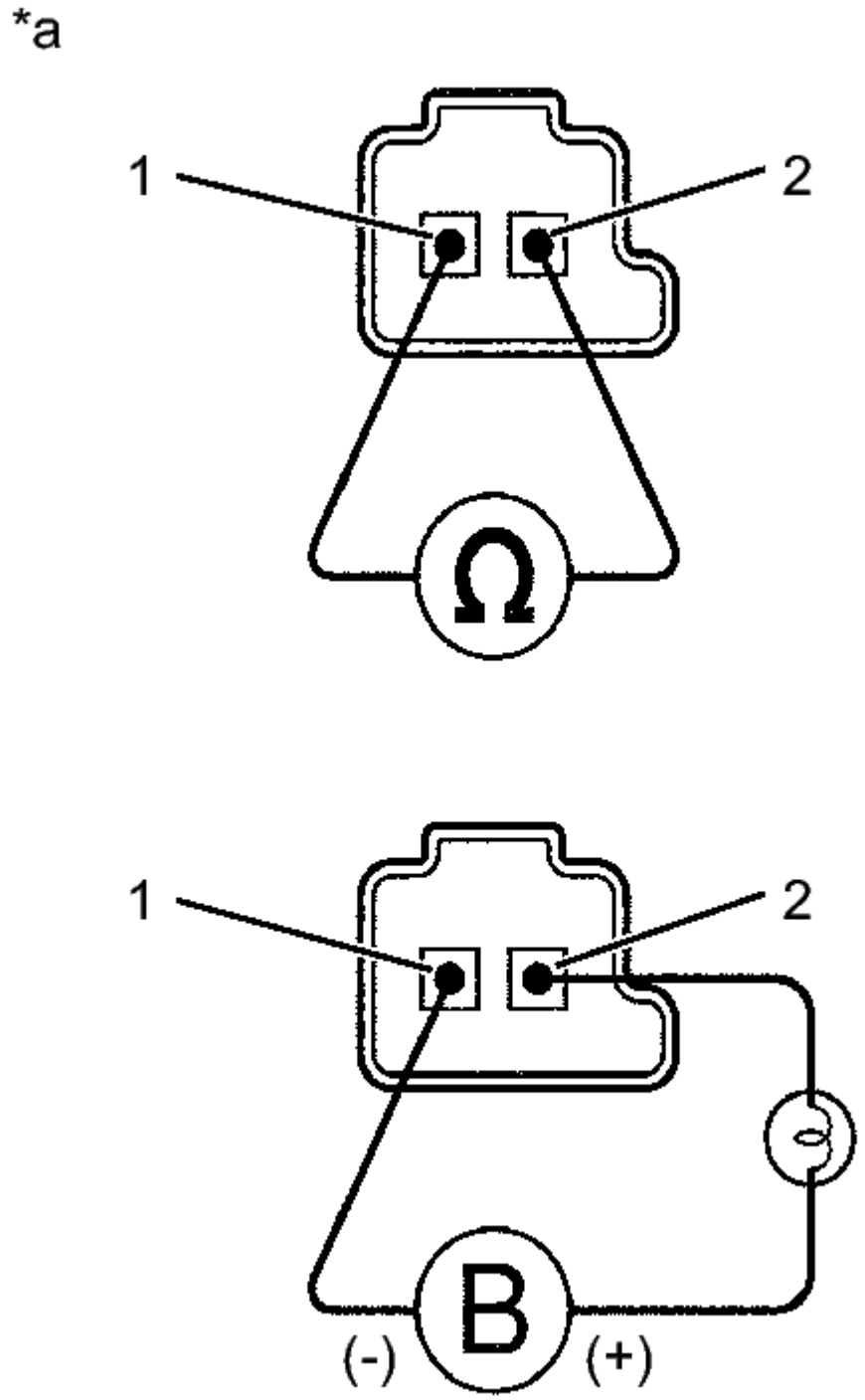

Fig. 66: Measuring Resistance Of Shift Solenoid Valve
Courtesy of TOYOTA MOTOR SALES, U.S.A., INC.

b. Measure the resistance according to the value(s) in the table below.

Standard Resistance

Tester Connection	Condition	Specified Condition
1 - 2	20°C (68° F)	5.0 to 5.6 ohms

TEXT IN ILLUSTRATION

*a	Component without harness connected: (Shift Solenoid Valve SL3)

c. Connect a battery positive (+) lead with a 21 W bulb to terminal 2 and a negative (-) lead to terminal 1 of the solenoid valve connector. Then check that the valve moves and makes an operating sound.

OK

Valve moves and makes an operating sound.

NG --> See step 10

OK: Go to next step

4. **INSPECT TRANSMISSION VALVE BODY ASSEMBLY**
   a. Check the transmission valve body assembly. Refer to **REMOVAL** .

OK

There are no foreign objects on each valve and they operate smoothly.

NG --> See step 11

OK --> See step 5

5. **REPLACE AUTOMATIC TRANSAXLE ASSEMBLY. Refer to REMOVAL**
6. **GO TO DTC CHART (RELATED SHIFT SOLENOID VALVE (SL1) PERFORMANCE DTC P0746). Refer to DTC P0746: Pressure Control Solenoid "A" Performance (Shift Solenoid Valve SL1)**
7. **GO TO DTC CHART (RELATED SHIFT SOLENOID VALVE (SL2) PERFORMANCE DTC P0776). Refer to DTC P0776: Pressure Control Solenoid "B" Performance (Shift Solenoid Valve SL2)**

8. **GO TO DTC CHART (RELATED SHIFT SOLENOID VALVE (SL3) PERFORMANCE DTC P0796). Refer to DTC P0796: Pressure Control Solenoid "C" Performance (Shift Solenoid Valve SL3)**
9. **GO TO DTC CHART (RELATED SHIFT SOLENOID VALVE (SLT) PERFORMANCE DTC P2714). Refer to DTC P2714: Pressure Control Solenoid "D" Performance (Shift Solenoid Valve SLT)**
10. **REPLACE SHIFT SOLENOID VALVE SL4. Refer to REMOVAL**
11. **REPAIR OR REPLACE TRANSMISSION VALVE BODY ASSEMBLY. Refer to REMOVAL**

DTC P2810: PRESSURE CONTROL SOLENOID "G" ELECTRICAL (SHIFT SOLENOID VALVE SL4)

DESCRIPTION

Changing from 1st to 6th is performed by the TCM turning shift solenoid valves SL1, SL2, SL3, SL4 and SL on and off. If an open or short circuit occurs in any of the shift solenoid valves, the TCM controls the remaining normal shift solenoid valves to allow the vehicle to be operated. Refer to **FAIL-SAFE CHART**

DTC No.	DTC Detection Condition	Trouble Area
P2810	The TCM checks for an open or short in the shift solenoid valve SL4 circuit while driving and shifting gears. (1 trip detection logic) • Output signal duty equals 100%. (NOTE: SL4 output signal duty is less than 100% under normal condition.)	• Open or short in shift solenoid valve SL4 circuit • Shift solenoid valve SL4 • Transmission wire • TCM

MONITOR DESCRIPTION

The TCM commands gear shifts by turning the shift solenoid valves on or off. When there is an open or short circuit in any shift solenoid valve circuit, the TCM detects the problem and illuminates the MIL and stores the DTC. The TCM also performs the fail-safe function and turns the other normal shift solenoid valves on or off (In case of an open or short circuit, the TCM stops sending current to the circuit.)

Refer to **FAIL-SAFE CHART** .

MONITOR STRATEGY

Related DTCs	P0798: Shift solenoid valve SL3/Range check
Required sensors/Components	Shift solenoid valve SL4
Frequency of operation	Continuous
Duration	1 second

MIL operation	Immediately
Sequence of operation	None

TYPICAL ENABLING CONDITIONS

ALL

The monitor will run whenever the following DTCs are not present	None
Ignition switch	ON
Starter	OFF

CONDITION (A)

Battery voltage	12 V or more

CONDITION (B)

Battery voltage	10 V or more and less than 12 V
CPU commanded duty	Less than 75%

TYPICAL MALFUNCTION THRESHOLDS

ALL

Output signal duty	100% or more

COMPONENT OPERATING RANGE

Output signal duty	More than 3% and less than 100%

WIRING DIAGRAM

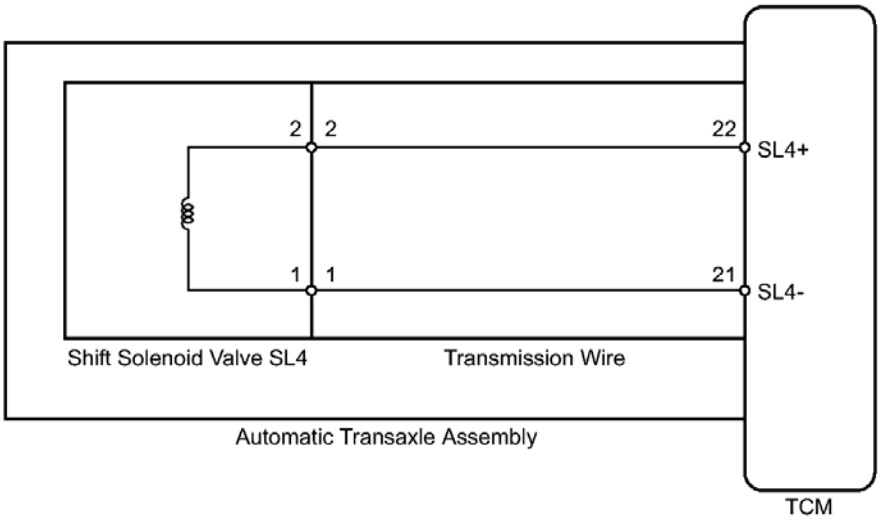

Fig. 67: Shift Solenoid Valve SL4 Circuit - Wiring Diagram
Courtesy of TOYOTA MOTOR SALES, U.S.A., INC.

INSPECTION PROCEDURE

NOTE: **Perform the universal trip to clear permanent DTCs. Refer to DTC CHECK / CLEAR .**

PROCEDURE

1. **INSPECT TRANSMISSION WIRE (SL4)**
   a. Remove the TCM from the transaxle.

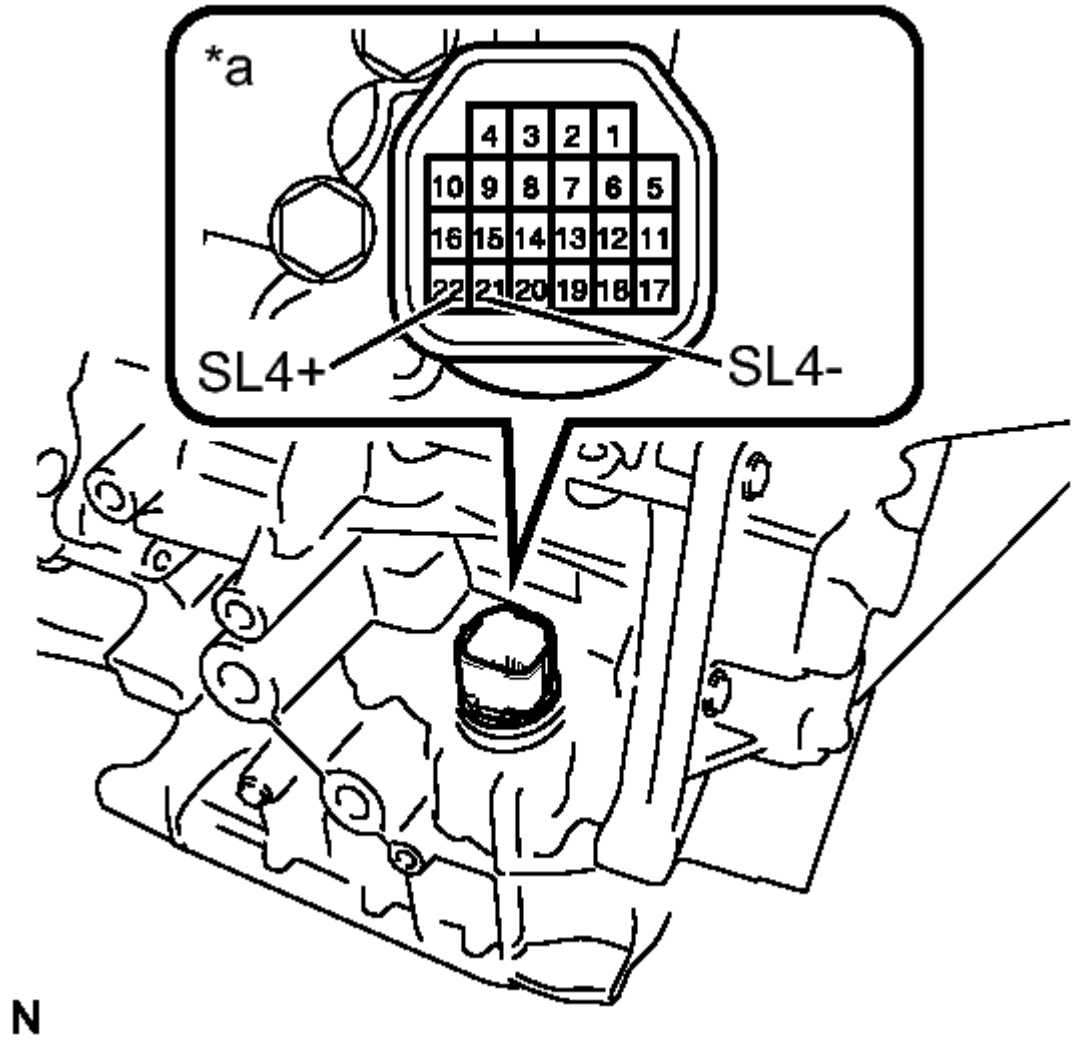

Fig. 68: Inspecting Transmission Wire (SL4)
Courtesy of TOYOTA MOTOR SALES, U.S.A., INC.

b. Measure the resistance according to the value(s) in the table below.

Standard Resistance

Tester Connection	Condition	Specified Condition
22 (SL4+) - 21 (SL4-)	20°C (68° F)	5.0 to 5.6 ohms
22 (SL4+) - Body ground	Always	10 kohms or higher
21 (SL4-) - Body	Always	10 kohms

ground		or higher
22 (SL4+) - All other terminals except 21 (SL4-)	Always	10 kohms or higher
21 (SL4-) - All other terminals except 22 (SL4+)	Always	10 kohms or higher

TEXT IN ILLUSTRATION

*a	Component without harness connected: (Shift Solenoid Valve SL4)

NG --> See step 2

OK --> See step 4

2. **INSPECT SHIFT SOLENOID VALVE SL4**
   a. Remove shift solenoid valve SL4.

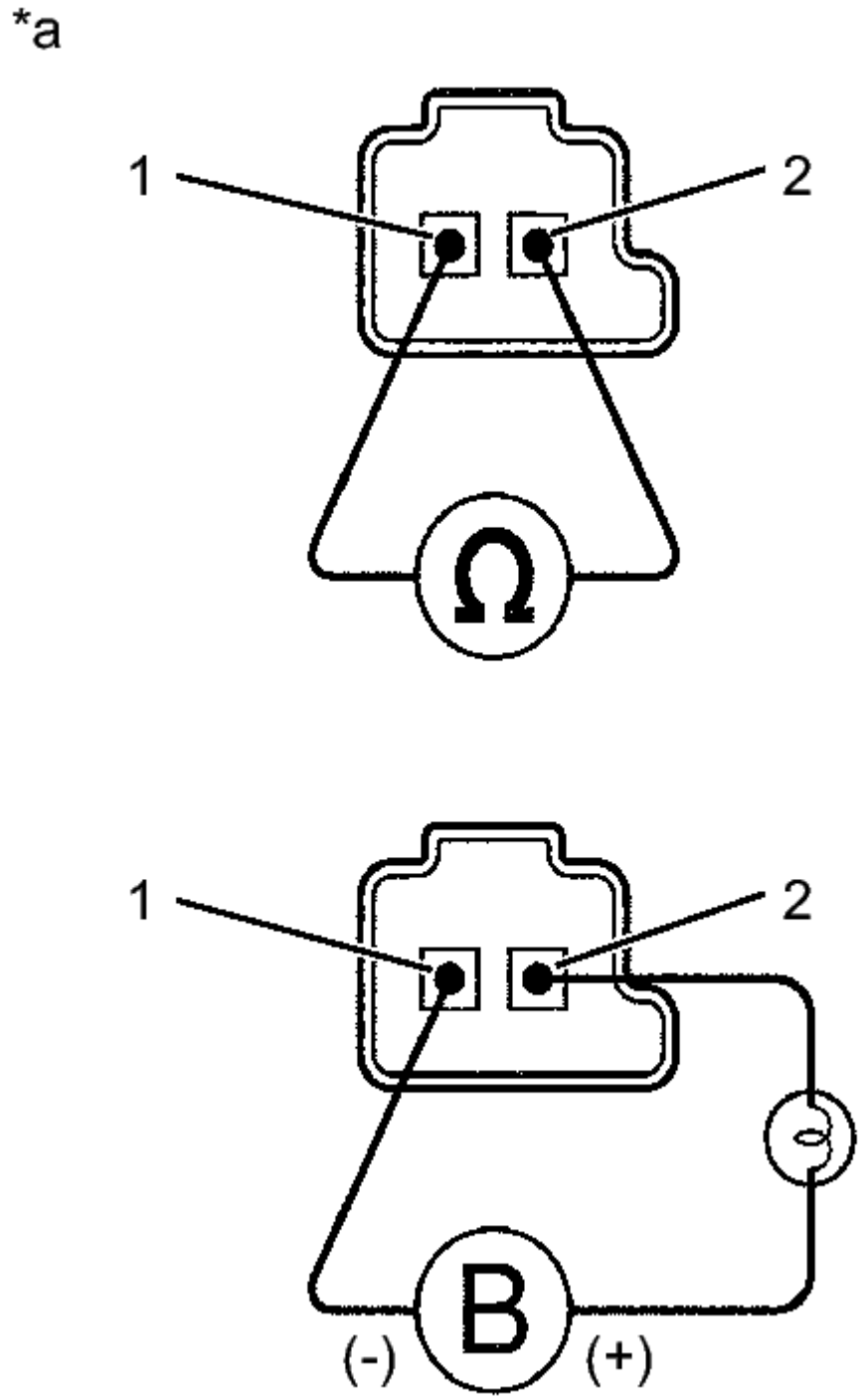

Fig. 69: Measuring Resistance Of Shift Solenoid Valve
Courtesy of TOYOTA MOTOR SALES, U.S.A., INC.

b. Measure the resistance according to the value(s) in the table below.

Standard Resistance

Tester Connection	Condition	Specified Condition
1 - 2	20°C (68°F)	5.0 to 5.6 ohms

TEXT IN ILLUSTRATION

*a	Component without harness connected: (Shift Solenoid Valve SL4)

c. Connect a battery positive (+) lead with a 21 W bulb to terminal 2 and a negative (-) lead to terminal 1 of the solenoid valve connector. Then check that the valve moves and makes an operating sound.

OK

Valve moves and makes an operating sound.

NG --> See step 5

OK --> See step 3

3. **REPLACE TRANSMISSION WIRE. Refer to REMOVAL**
4. **REPLACE TCM. Refer to REMOVAL**
5. **REPLACE SHIFT SOLENOID VALVE SL4. Refer to REMOVAL**

DTC U0100: LOST COMMUNICATION WITH ECM / PCM "A"

DESCRIPTION

The engine control unit communicates with the TCM using the Controller Area Network (CAN).

If there is a problem in this communication, the TCM sets a DTC.

DTC No.	DTC Detection Condition	Trouble Area
U0100	Following conditions are met for 1.25 seconds (1 trip detection logic): • Ignition switch ON	• Harness and connector • ECM

	• Battery voltage is 10.5 V or more • No communication between the ECM and TCM	• TCM

MONITOR STRATEGY

Related DTCs	U0100: Verify communication
Required Sensors/Components (Main)	TCM
Required Sensors/Components (Related)	-
Frequency of Operation	Continuous
Duration	1.25 seconds
MIL Operation	Immediately
Sequence of Operation	None

TYPICAL ENABLING CONDITIONS

Monitor runs whenever following DTCs not present	None
Battery Voltage	10.5 V or more
Ignition Switch	ON
Starter	OFF

TYPICAL MALFUNCTION THRESHOLDS

Communication between TCM and ECM	No communication

WIRING DIAGRAM

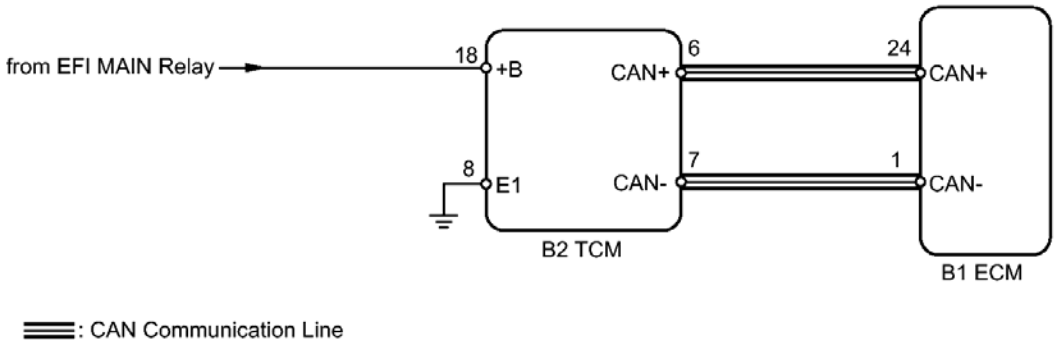

Fig. 70: CAN Communication Circuit - Wiring Diagram
Courtesy of TOYOTA MOTOR SALES, U.S.A., INC.

INSPECTION PROCEDURE

NOTE: **Perform the universal trip to clear permanent DTCs. Refer to DTC CHECK / CLEAR .**

HINT:

- Refer to inspection procedure for CAN communication system.
- If the CAN communication malfunctions, the TCM cannot receive the current data from the ECM. In this case, the freeze frame data output from the TCM has not been updated, so the data will not be useful for the inspection. However, reading the Data List as the first step in troubleshooting is effective to find malfunctions.
- The malfunction area can be checked using the Bus Check function on the Techstream. Refer to **DIAGNOSIS SYSTEM** .

PROCEDURE

1. **CHECK ECU TERMINAL VOLTAGE (+B AND E1 TERMINALS)**
   a. Disconnect the TCM connector.

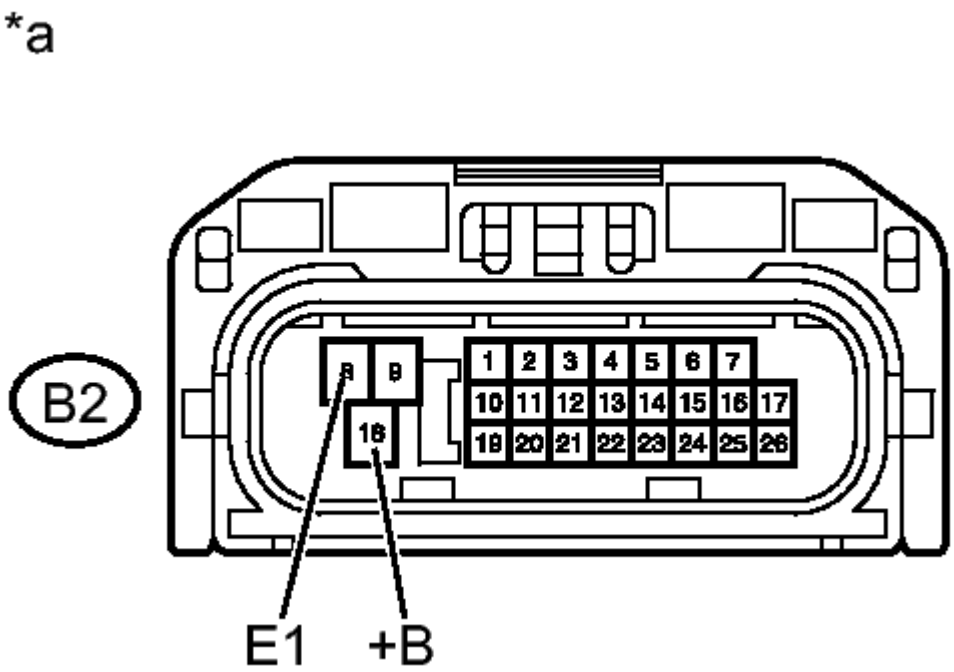

Fig. 71: Measuring Voltage At ECU +B & E1 Terminals
Courtesy of TOYOTA MOTOR SALES, U.S.A., INC.

   b. Turn the ignition switch to ON.
   c. Measure the voltage according to the value(s) in the table below.

   Standard Voltage

Tester Connection	Switch Condition	Specified Condition
B2-18 (+B) - B2-8 (E1)	Ignition switch ON	11 to 14 V

d. Turn the ignition switch off.
e. Measure the resistance according to the value(s) in the table below.

Standard Resistance

Tester Connection	Condition	Specified Condition
B2-8 (E1) - Body ground	Always	Below 1 ohms

TEXT IN ILLUSTRATION

*a	Front view of wire harness connector: (to TCM)

NG --> REPAIR OR REPLACE HARNESS OR CONNECTOR

OK: Go to next step

2. **CHECK HARNESS AND CONNECTOR (TCM - ECM)**
   a. Disconnect the TCM connector.
   b. Disconnect the ECM connector.
   c. Measure the resistance according to the value(s) in the table below.

Standard Resistance

Tester Connection	Condition	Specified Condition
B2-6 (CAN+) - B1-24 (CAN+)	Always	Below 1 ohms
B2-7 (CAN-) - B1-1	Always	Below 1 ohms

(CAN-)		
B2-6 (CAN+) or B1-24 (CAN+) - Body ground or other terminals	Always	1 Mohms or higher
B2-7 (CAN-) or B1-1 (CAN-) - Body ground or other terminals	Always	1 Mohms or higher

NG --> REPAIR OR REPLACE HARNESS OR CONNECTOR

OK: Go to next step

3. **REPLACE TCM**
   a. Replace the TCM. Refer to **REMOVAL** .

      HINT:

      Replace the TCM with a TCM from a normally functioning vehicle of the same model.

NEXT: Go to next step

4. **CHECK DTC OUTPUT**
   a. Connect the Techstream to the DLC3.
   b. Start the engine.
   c. Turn the Techstream on.
   d. Enter the following menus: Powertrain / ECT / Trouble Codes.
   e. Read the DTCs using the Techstream.

      RESULT

Result	Proceed to
DTC not output	A
U0100	

is output	B

B --> See step 5

A --> END

5. **REPLACE ECM. Refer to <u>REMOVAL</u>**

CIRCUIT TESTS

Transmission Control Switch Circuit

DESCRIPTION

When the shift lever is in S and it is moved toward "-" or "+", it is possible to select different shift ranges (1st through 6th ranges).

Moving the shift lever toward "+" increases the shift range by one, and moving the shift lever toward "-" decreases the shift range by one.

WIRING DIAGRAM

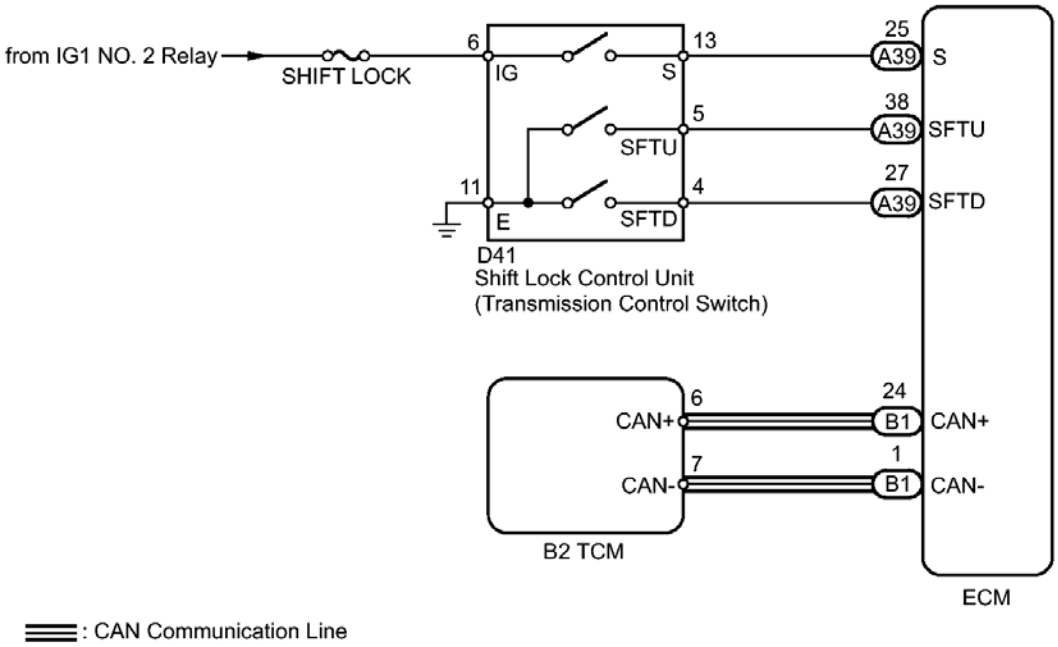

<u>Fig. 72: Transmission Control Switch Circuit - Wiring Diagram</u>
Courtesy of TOYOTA MOTOR SALES, U.S.A., INC.

INSPECTION PROCEDURE

NOTE: **Inspect the fuses for circuits related to this system before performing the following inspection procedure.**

PROCEDURE

1. **CHECK HARNESS AND CONNECTOR (BATTERY - TRANSMISSION CONTROL SWITCH)**
   a. Disconnect the transmission control switch connector of shift lock control unit.

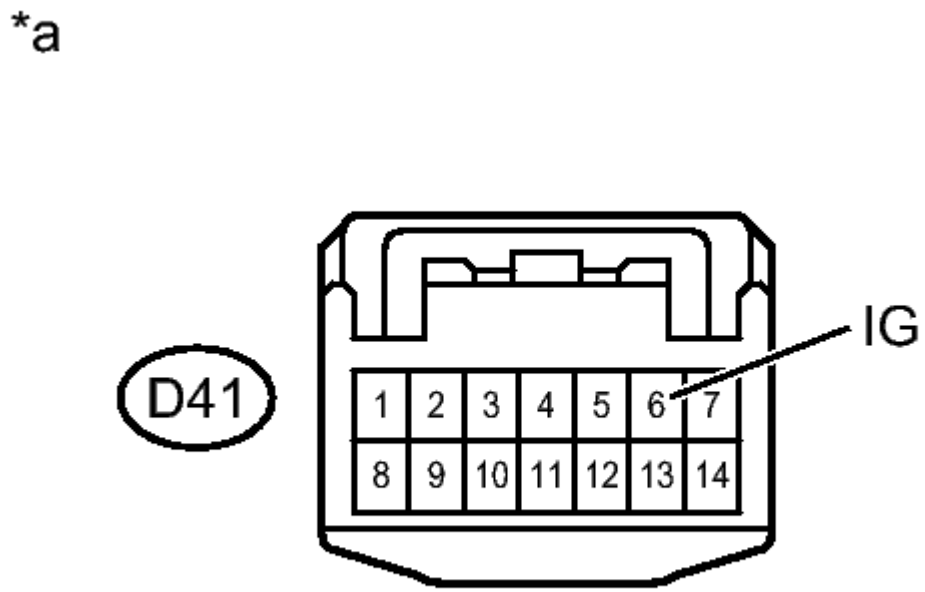

Fig. 73: Checking Harness And Connector (Battery - Transmission Control Switch)
Courtesy of TOYOTA MOTOR SALES, U.S.A., INC.

   b. Turn the ignition switch to ON.
   c. Measure the voltage according to the value(s) in the table below.

   Standard Voltage

Tester Connection	Switch Condition	Specified Condition
D41-6 (IG) - Body ground	Ignition switch ON	11 to 14 V
	Ignition switch off	Below 1 V

TEXT IN ILLUSTRATION

*a	Front view of wire harness connector (to Transmission Control Switch)

NG --> REPAIR OR REPLACE HARNESS OR CONNECTOR

OK: Go to next step

2. **CHECK HARNESS AND CONNECTOR (TRANSMISSION CONTROL SWITCH - BODY GROUND)**
   a. Measure the resistance according to the value(s) in the table below.

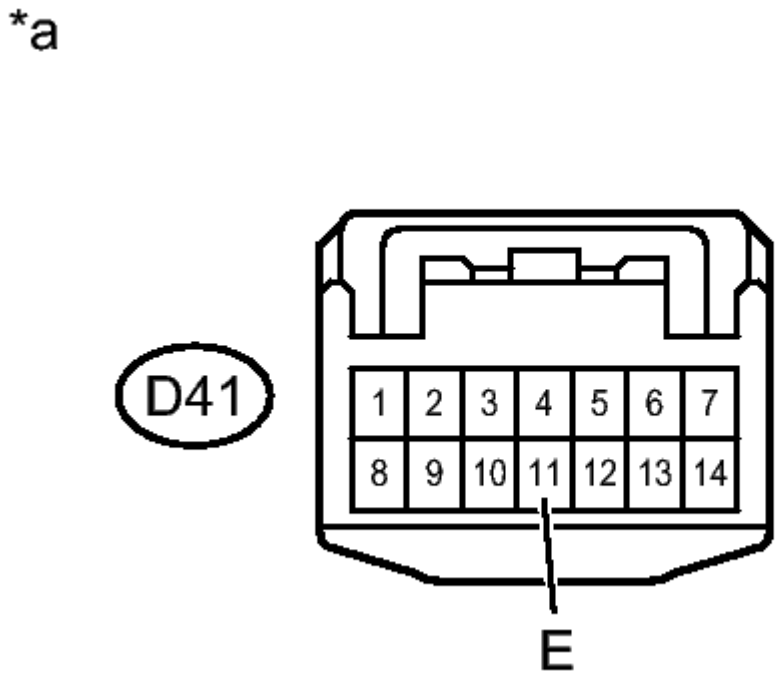

Fig. 74: Checking Harness And Connector (Transmission Control Switch - Body Ground)
Courtesy of TOYOTA MOTOR SALES, U.S.A., INC.

Standard Resistance

Tester Connection	Condition	Specified Condition
D41-11 (E)		Below 1

- Body ground	Always	ohms

TEXT IN ILLUSTRATION

*a	Front view of wire harness connector (to Transmission Control Switch)

NG --> REPAIR OR REPLACE HARNESS OR CONNECTOR

OK: Go to next step

3. **INSPECT SHIFT LOCK CONTROL UNIT (TRANSMISSION CONTROL SWITCH)**
   a. Measure the resistance according to the value(s) in the table below.

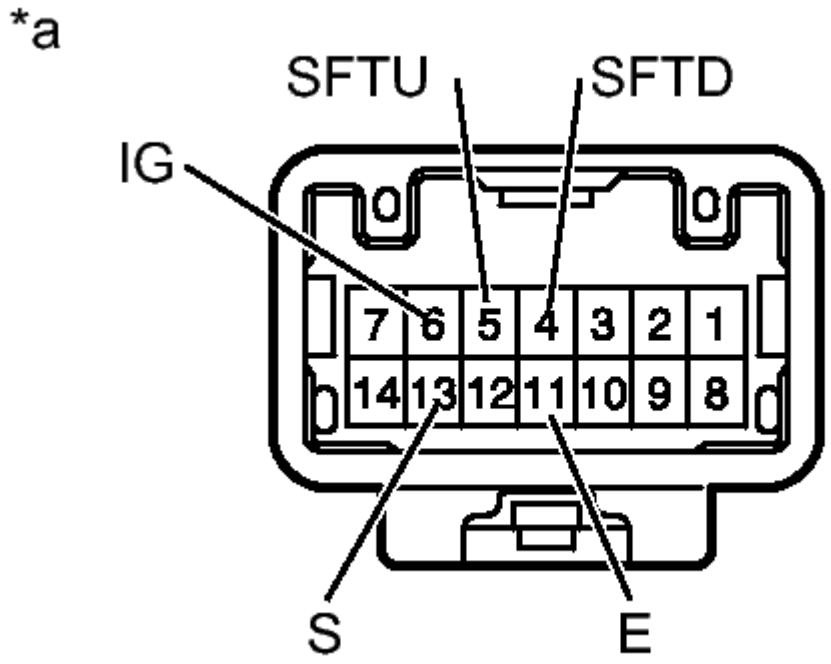

Fig. 75: Inspecting Shift Lock Control Unit (Transmission Control Switch)
Courtesy of TOYOTA MOTOR SALES, U.S.A., INC.

Standard Resistance

Tester	Switch	Specified

Connection	Condition	Condition
6 (IG) - 13 (S)	Shift lever in S, "+" or "-"	Below 1 ohms
	Shift lever not in S, "+" or "-"	10 kohms or higher
5 (SFTU) - 11 (E)	Shift lever held in "+" (Up-shift)	Below 1 ohms
	Shift lever not held in "+"	10 kohms or higher
4 (SFTD) - 11 (E)	Shift lever held in "-" (Down-shift)	Below 1 ohms
	Shift lever not held in "-"	10 kohms or higher

TEXT IN ILLUSTRATION

*a	Component without harness connected (Transmission Control Switch)

NG --> See step 6

OK: Go to next step

4. **CHECK HARNESS AND CONNECTOR (TRANSMISSION CONTROL SWITCH - ECM)**
   a. Disconnect the ECM connector.
   b. Measure the resistance according to the value(s) in the table below.

   Standard Resistance

Tester Connection	Condition	Specified Condition
D41-4 (SFTD) -	Always	Below 1

A39-27 (SFTD)		ohms
D41-5 (SFTU) - A39-38 (SFTU)	Always	Below 1 ohms
D41-13 (S) - A39-25 (S)	Always	Below 1 ohms
D41-4 (SFTD) - Body ground	Always	10 kohms or higher
D41-5 (SFTU) - Body ground	Always	10 kohms or higher
D41-13 (S) - Body ground	Always	10 kohms or higher

NG --> REPAIR OR REPLACE HARNESS OR CONNECTOR

OK --> See step 5

5. **PROCEED TO NEXT SUSPECTED AREA SHOWN IN PROBLEM SYMPTOMS TABLE. Refer to PROBLEM SYMPTOMS TABLE**
6. **REPLACE SHIFT LOCK CONTROL UNIT (TRANSMISSION CONTROL SWITCH). Refer to REMOVAL**

ECU Power Source Circuit

DESCRIPTION

When the ignition switch is turned to ON, voltage from the ECM MREL terminal is applied to the EFI MAIN relay. This causes the contacts of the EFI MAIN relay to close, which supplies power to terminal +B of the TCM.

WIRING DIAGRAM

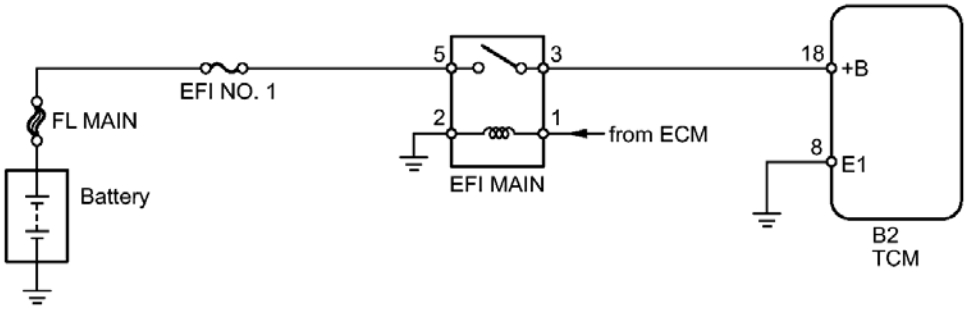

Fig. 76: ECU Power Source Circuit - Wiring Diagram
Courtesy of TOYOTA MOTOR SALES, U.S.A., INC.

INSPECTION PROCEDURE

NOTE: **Inspect the fuses for circuits related to this system before performing the following inspection procedure.**

PROCEDURE

1. **CHECK HARNESS AND CONNECTOR (TCM - BODY GROUND)**
   a. Turn the ignition switch off.

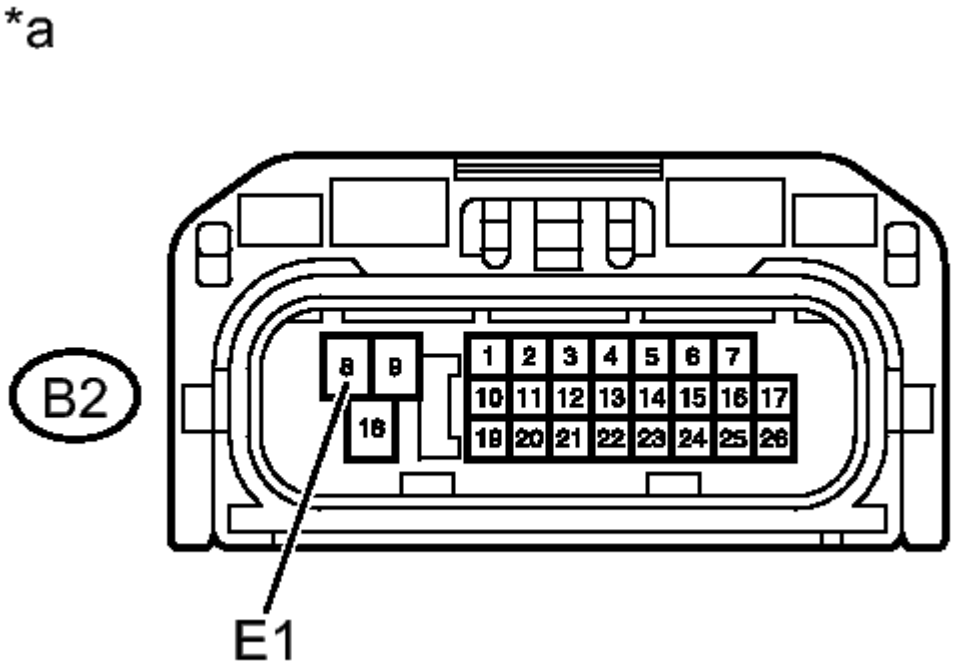

Fig. 77: Checking Harness And Connector (TCM - Body Ground)
Courtesy of TOYOTA MOTOR SALES, U.S.A., INC.

b. Disconnect the TCM connectors.

c. Measure the resistance according to the value(s) in the table below.

Standard Resistance

Tester Connection	Condition	Specified Condition
B2-8 (E1) - Body ground	Always	Below 1 ohms

TEXT IN ILLUSTRATION

*a	Front view of wire harness connector (to TCM)

NG --> REPAIR OR REPLACE HARNESS OR CONNECTOR

OK: Go to next step

2. **INSPECT ECU TERMINAL VOLTAGE (+B TERMINAL)**

a. Disconnect the TCM connectors.

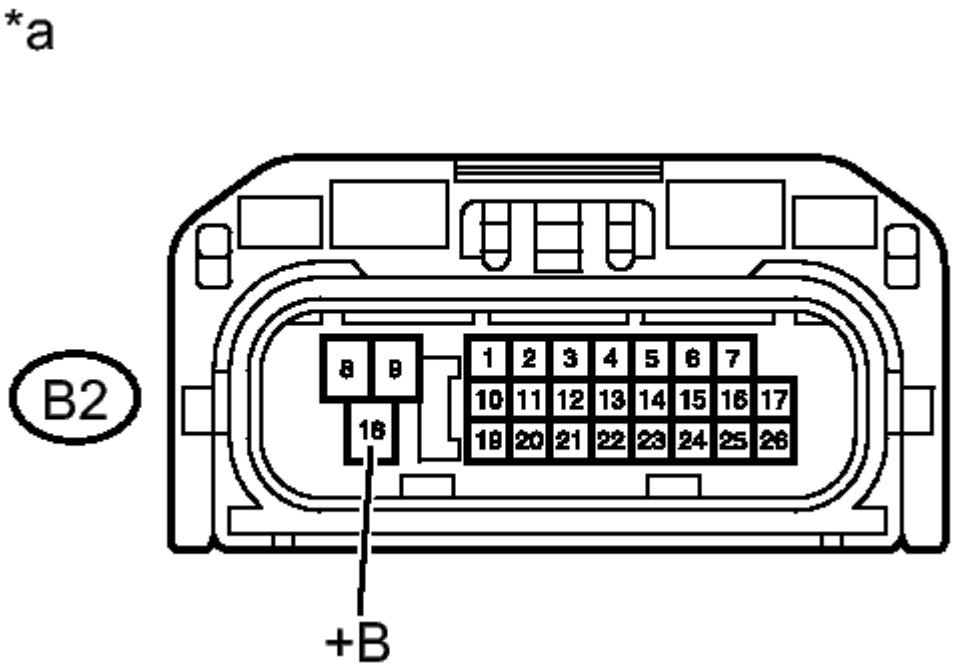

Fig. 78: Inspecting ECU Terminal Voltage (+B Terminal)
Courtesy of TOYOTA MOTOR SALES, U.S.A., INC.

b. Turn the ignition switch to ON.
c. Measure the voltage according to the value(s) in the table below.

Standard Voltage

Tester Connection	Switch Condition	Specified Condition
B2-18 (+B) - Body ground	Ignition switch ON	11 to 14 V

TEXT IN ILLUSTRATION

*a	Front view of wire harness connector (to TCM)

NG --> See step 3

OK --> See step 4

3. **CHECK HARNESS AND CONNECTOR (TCM - ENGINE ROOM JUNCTION BLOCK ASSEMBLY)**
   a. Turn the ignition switch off.
   b. Disconnect the TCM connector.
   c. Remove the EFI MAIN relay from the engine room relay block.
   d. Measure the resistance according to the value(s) in the table below.

Standard Resistance

Tester Connection	Condition	Specified Condition
B2-18 (+B) - EFI MAIN relay holder 3	Always	Below 1 ohms
B2-18 (+B) - Body ground	Always	10 kohms or higher

NG --> REPAIR OR REPLACE HARNESS OR CONNECTOR

OK --> See step 5

4. **PROCEED TO NEXT SUSPECTED AREA SHOWN IN PROBLEM SYMPTOMS TABLE. Refer to PROBLEM SYMPTOMS TABLE**
5. **GO TO ECM POWER SOURCE CIRCUIT (ENGINE CONTROL SYSTEM / SFI SYSTEM). Refer to ECM Power Source Circuit**

AUTOMATIC TRANSAXLE SYSTEM

PRECAUTION

PRECAUTION

1. **IGNITION SWITCH EXPRESSIONS**
   a. The type of ignition switch used on this model differs according to the specifications of the vehicle. The expressions listed in the table below are used in this information.

Expression	Ignition Switch (Position)	Engine Switch (Condition)
Ignition switch off	LOCK	Off
Ignition switch ACC	ACC	On (ACC)
Ignition switch ON	ON	On (IG)
Engine start	START	Start

2. **TROUBLESHOOTING PRECAUTION**

NOTE:

- **If automatic transaxle parts are replaced, perform the following as necessary referring to the table below:**
  - **Registration of the transaxle compensation code. Refer to REGISTRATION.**
  - **Initialization of the transaxle compensation code. Refer to INITIALIZATION.**
  - **Road test. Refer to ROAD TEST.**
  - **Reset Memory (learned values). Refer to INITIALIZATION.**

PARTS REPLACEMENT COMPENSATION TABLE

Replaced Part	Transaxle Compensation Code	Road Test	Reset Memory (Learned Values)
Automatic Transaxle			

Assembly		Input	Necessary	Reset
Valve Body Assembly		Initialize	Necessary	Reset
Shift Solenoid Valve SL1 and/or SL2		-	Necessary	-
Shift Solenoid Valve SL3 and/or SL4		Initialize	Necessary	Reset
TCM (If possible, read the transaxle compensation code from the previous TCM)	Possible	Input (Into the new TCM)	Necessary	Reset
	Impossible	Initialize	Necessary	Reset

- **Reset Memory cannot be completed by only disconnecting and reconnecting the cable to the negative (-) battery terminal.**

WARNING: When using compressed air, always aim away from yourself to prevent Automatic Transmission Fluid (ATF) or kerosene from spraying on your face.

NOTE:

- **The automatic transaxle is composed of precision-made parts, necessitating careful inspection before reassembly because even a small nick could cause fluid leakage or affect performance.**
- **The procedures are organized so that you work on only one component group at a time. This will help avoid confusion with similar-looking parts of different sub-assemblies being on your workbench at the same time.**
- **The component groups are inspected and repaired from the converter housing side.**
- **Whenever possible, complete the inspection, repair and reassembly before proceeding to the next component group. If a defect is found in a certain component group during reassembly, inspect and repair this group immediately. If a component group cannot be assembled because parts are being ordered, be sure to keep all parts of the group in a separate container while proceeding with disassembly, inspection, repair and reassembly of other component groups.**
- **Use of Toyota Genuine ATF WS is recommended.**
- **All disassembled parts should be washed clean, and compressed air should be blown through any fluid passages and holes.**
- **Dry all parts with compressed air. Never use cloth.**
- **The recommended ATF or kerosene should be used for cleaning.**

- **After cleaning, the parts should be arranged in the order they were removed for efficient inspection, repairs, and reassembly.**
- **New discs for the brakes and clutches that will be used for replacement must be soaked in ATF for at least 15 minutes before reassembly.**
- **All oil seal rings, clutch discs, clutch plates, rotating parts, and sliding surfaces should be coated with ATF prior to reassembly.**
- **All old gaskets and rubber O-rings must be replaced.**
- **Do not apply adhesive cement to gaskets or similar parts.**
- **Make sure that the ends of the snap rings are not aligned with any cutouts. Also make sure that snap rings are correctly installed into the grooves.**
- **If a worn bushing is to be replaced, the sub-assembly containing the bushing must also be replaced.**
- **Check the thrust bearings and races for wear or damage. Replace them if necessary.**
- **Use petroleum jelly to keep parts in place.**
- **When working with seal packing material, the following must be observed:**
  - **Using a razor blade and a gasket scraper, remove all the old seal packing material from the gasket surface.**
  - **Thoroughly clean all components to remove any loose material.**
  - **Clean both sealing surfaces with a non-residue solvent.**
  - **Parts must be reassembled within 10 minutes of application. Otherwise, the seal packing material must be removed and reapplied.**

DEFINITION OF TERMS

DEFINITION OF TERMS

Term	Definition
Monitor description	Description of what the TCM monitors and how it detects malfunctions (monitoring purpose and its details).
Related DTCs	Diagnostic code
Typical enabling condition	Preconditions that allow the TCM to detect malfunctions. With all preconditions satisfied, the TCM sets the DTC when the monitored value(s) exceeds the malfunction threshold(s).
	The priority order that is applied to monitoring, if multiple sensors and

Sequence of operation	components are used to detect the malfunction. While another sensor is being monitored, the next sensor or component will not be monitored until the previous monitoring has concluded.
Required sensor/components	The sensors and components that are used by the TCM to detect malfunctions.
Frequency of operation	The number of times that the TCM checks for malfunctions per driving cycle. "Once per driving cycle" means that the TCM detects malfunction only one time during a single driving cycle. "Continuous" means that the TCM detects malfunction every time when the enabling conditions are met.
Duration	The minimum time that the TCM must sense a continuous deviation in the monitored value (s) before setting a DTC. This timing begins after the "typical enabling conditions" are met.
Malfunction thresholds	Beyond this value, the TCM will conclude that there is a malfunction and set a DTC.
MIL operation	MIL illumination timing after a defect is detected. "Immediately" means that the TCM illuminates MIL the instant the TCM determines that there is a malfunction. "2 driving cycles" means that the TCM illuminates MIL if the same malfunction is detected again in the 2nd driving cycle.
Component operating range	Normal operation range of sensors and solenoids under normal driving conditions. Use these ranges as a reference. They cannot be used to judge if a sensor or solenoid is defective.

PARTS LOCATION

ILLUSTRATION

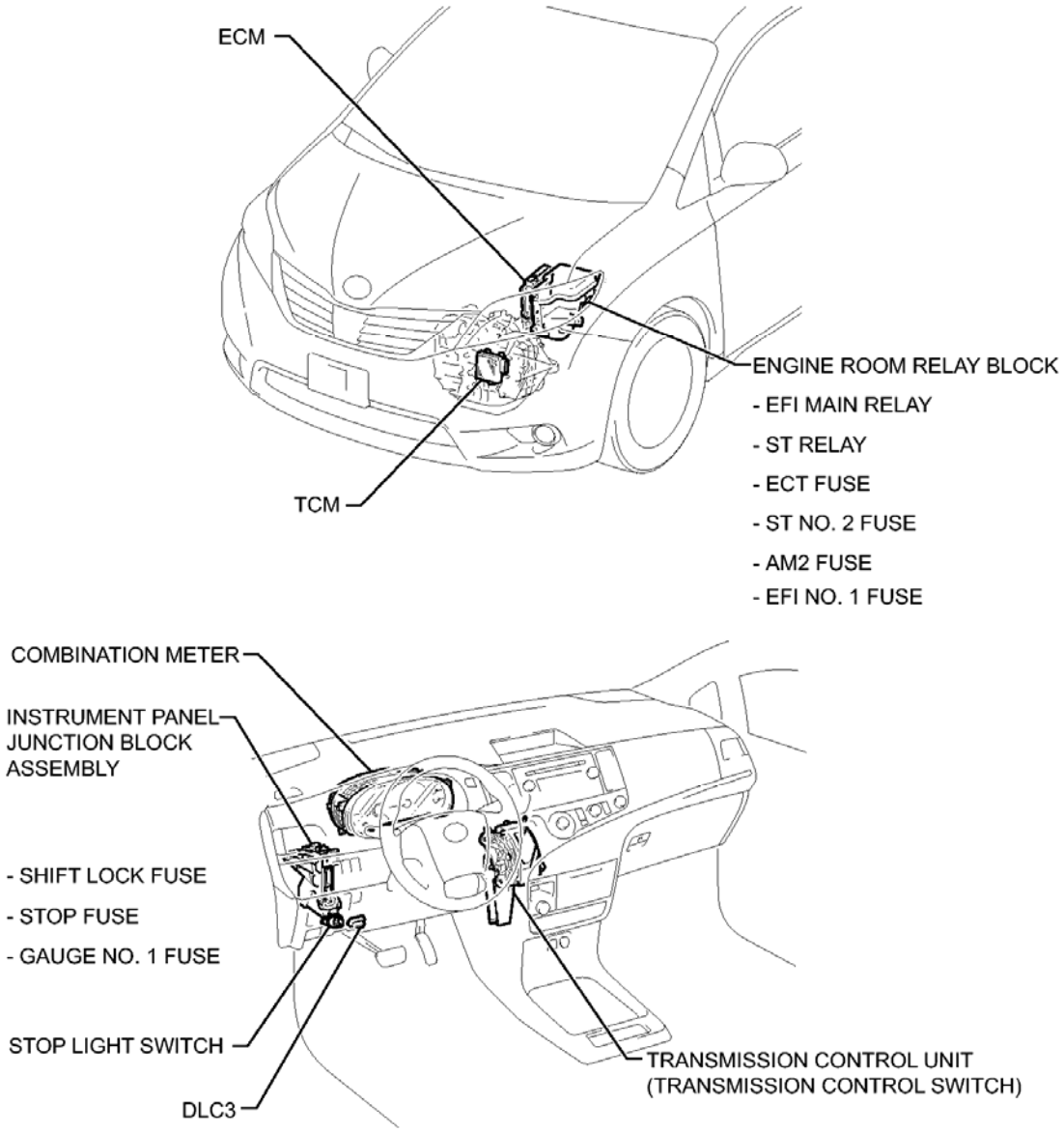

P

Fig. 1: Automatic Transaxle System Replacement Components (1 Of 2)
Courtesy of TOYOTA MOTOR SALES, U.S.A., INC.

ILLUSTRATION

VALVE BODY ASSEMBLY :

SHIFT SOLENOID VALVE (SL1, SL2, SL3, SL4, SL, SLU, SLT)

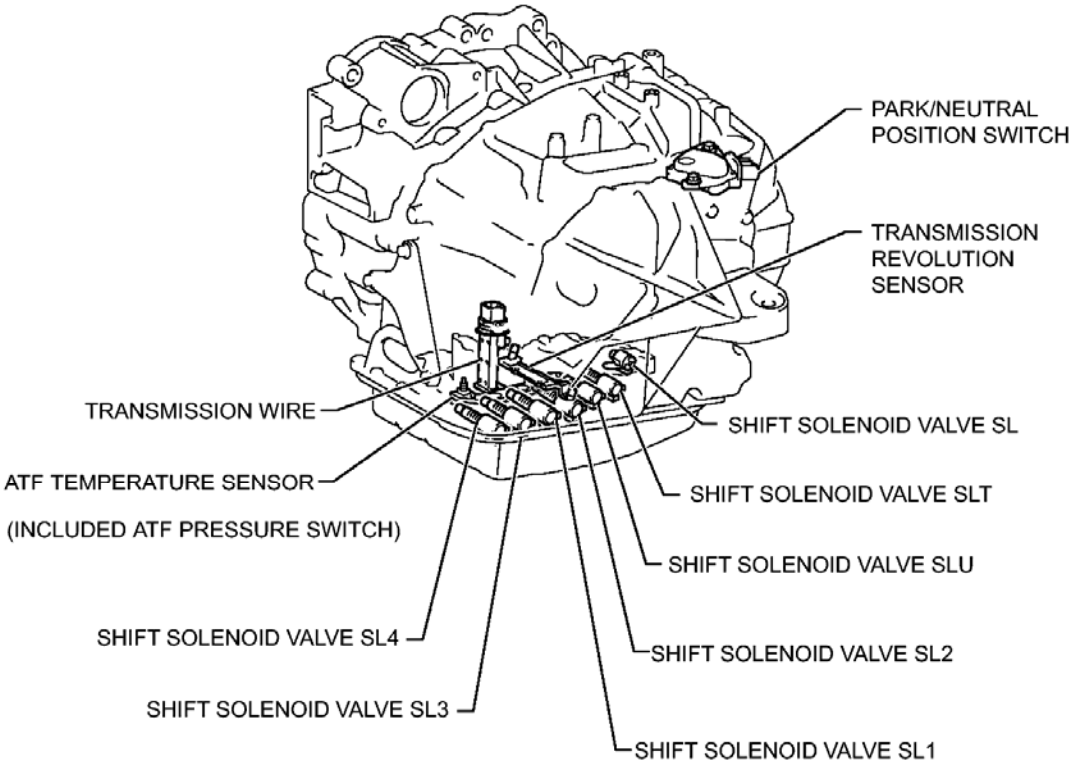

H

Fig. 2: Automatic Transaxle System Replacement Components (2 Of 2)
Courtesy of TOYOTA MOTOR SALES, U.S.A., INC.

SYSTEM DIAGRAM

SYSTEM DIAGRAM

The configuration of the electronic control system in the U660F automatic transaxle is as shown in the following chart.

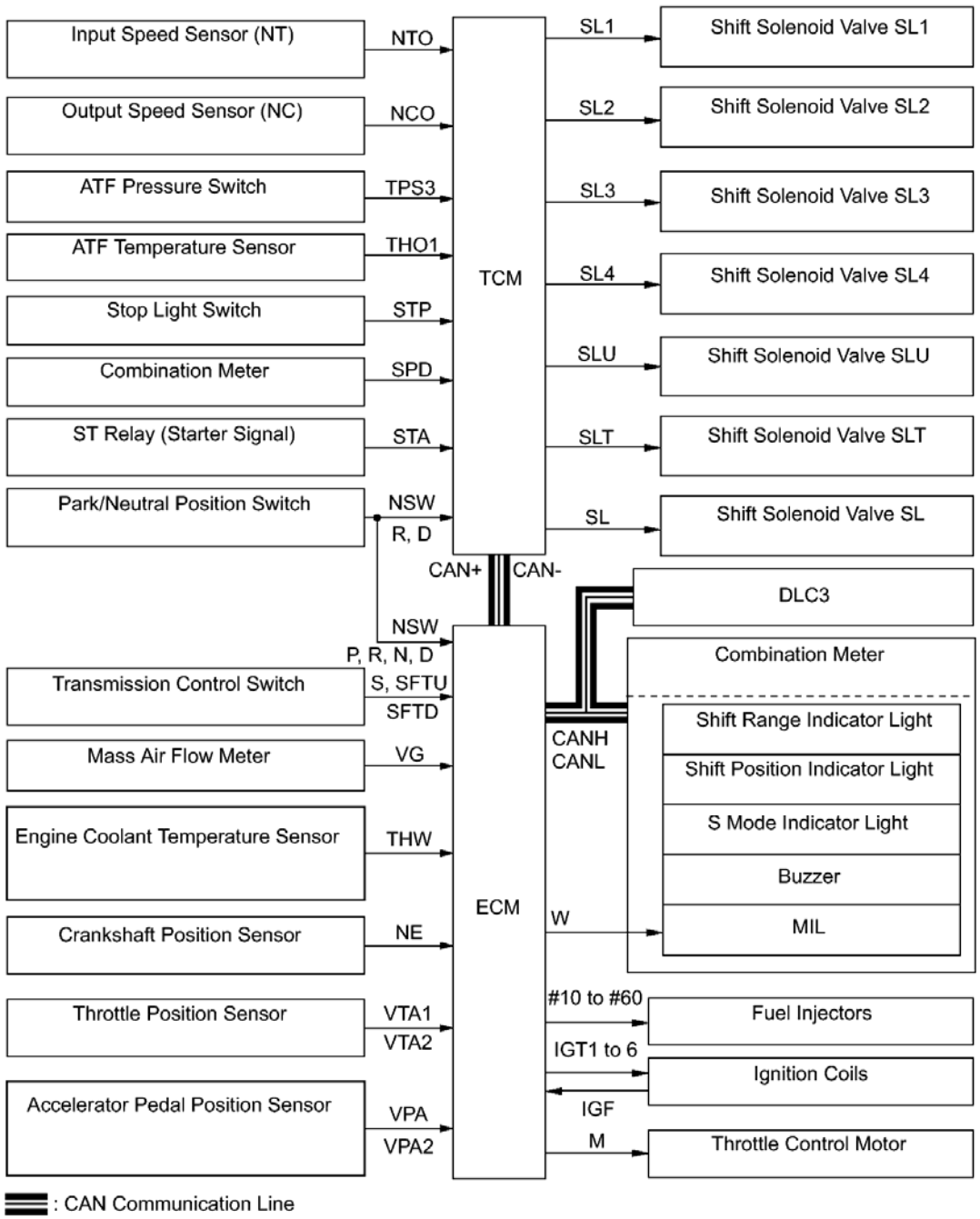

Fig. 3: Automatic Transaxle System Diagram (1 Of 4)
Courtesy of TOYOTA MOTOR SALES, U.S.A., INC.

w/o Smart Key System:

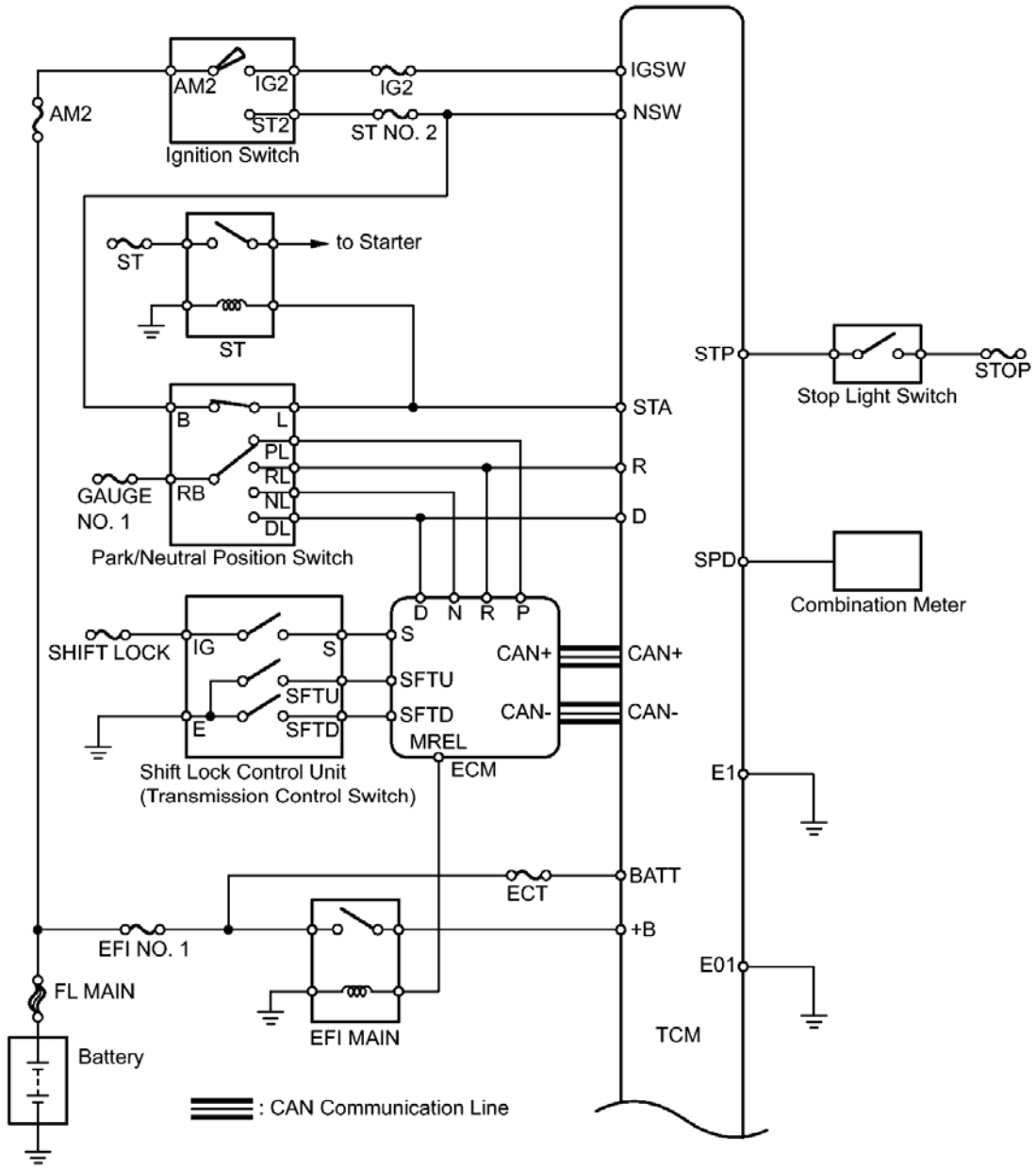

Fig. 4: Automatic Transaxle System Diagram (2 Of 4)
Courtesy of TOYOTA MOTOR SALES, U.S.A., INC.

w/ Smart Key System:

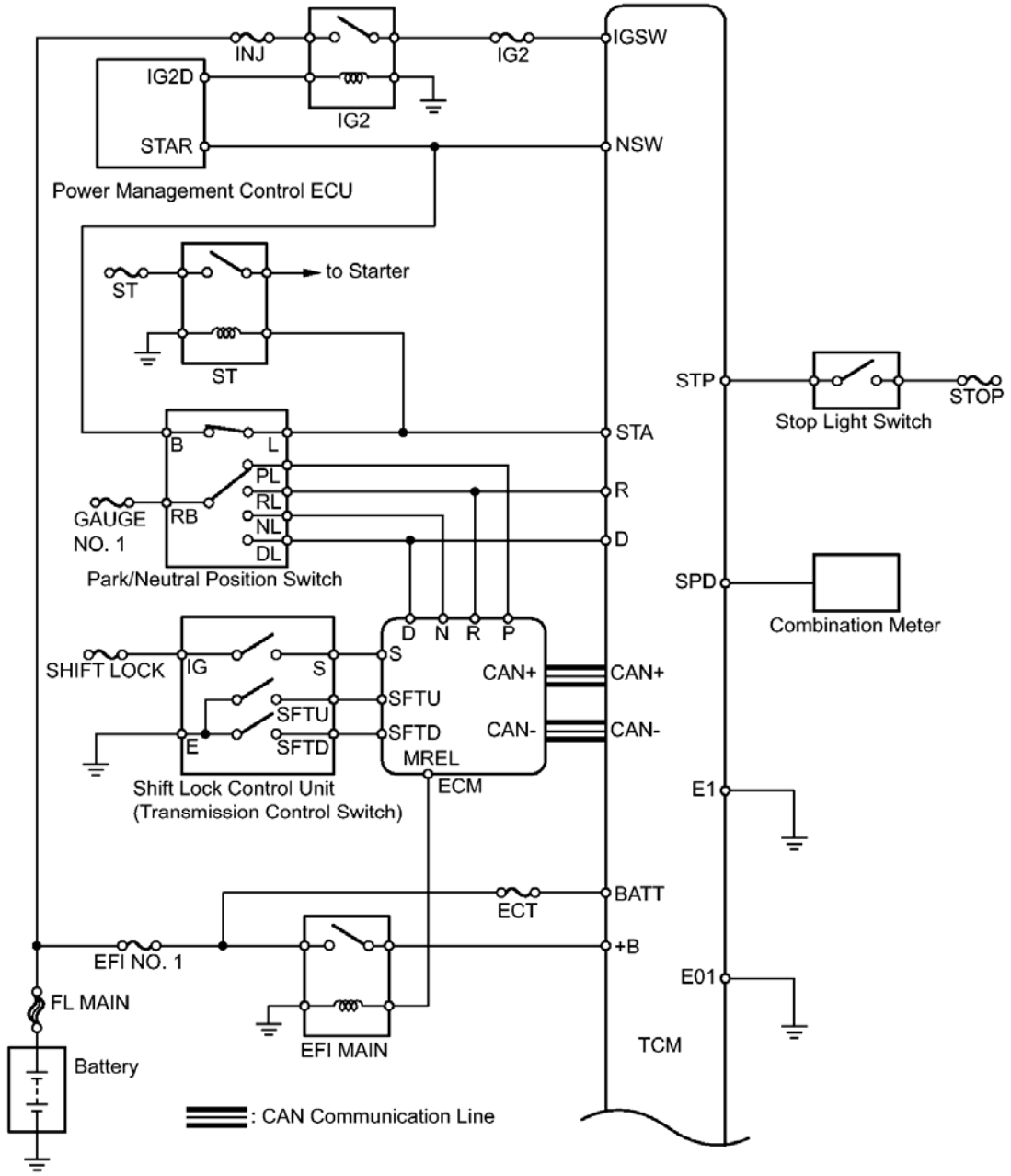

<u>Fig. 5: Automatic Transaxle System Diagram (3 Of 4)</u>
Courtesy of TOYOTA MOTOR SALES, U.S.A., INC.

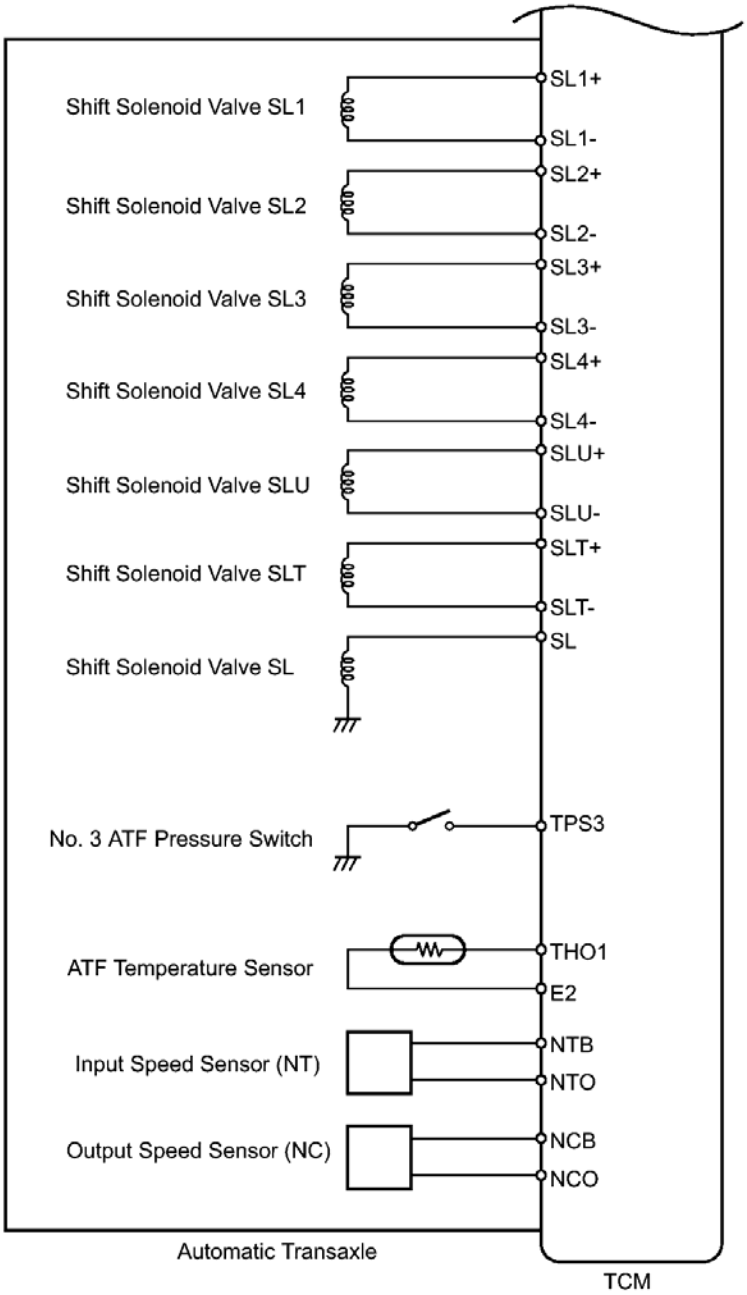

Fig. 6: Automatic Transaxle System Diagram (4 Of 4)
Courtesy of TOYOTA MOTOR SALES, U.S.A., INC.

SYSTEM DESCRIPTION

SYSTEM DESCRIPTION

1. **SYSTEM DESCRIPTION**

a. The Electronic Controlled Automatic Transaxle (ECT) is an automatic transaxle that has its shift timing electronically controlled by the Transmission Control Module (TCM). The TCM detects electrical signals that indicate engine and driving conditions, and controls the shift point, based on driver's habits and road conditions. As a result, fuel efficiency and transaxle performance are improved.

   Shift shock has been reduced by controlling the engine and transaxle simultaneously.

   In addition, the ECT has features such as:

   - Diagnostic function.
   - Fail-safe function for use when a malfunction occurs.

HOW TO PROCEED WITH TROUBLESHOOTING

HOW TO PROCEED WITH TROUBLESHOOTING

HINT:

- The TCM of this system is connected to the CAN communication system. Therefore, before starting troubleshooting, make sure to check that there is no trouble in the CAN and multiplex communication system.
- *: Use the Techstream.

1. **VEHICLE BROUGHT TO WORKSHOP**

   NEXT: Go to next step

2. **CUSTOMER PROBLEM ANALYSIS**
   a. Refer to Customer Problem Analysis. Refer to **GENERAL INFORMATION** .

      NEXT: Go to next step

3. **INSPECT BATTERY VOLTAGE**

   Standard voltage

   11 to 14 V

   If the voltage is below 11 V, recharge or replace the battery before proceeding.

   NEXT: Go to next step

4. **CONNECT TECHSTREAM TO DLC3***

   NEXT: Go to next step

5. **CHECK AND CLEAR DTCS AND FREEZE FRAME DATA***
   a. Refer to DTC Check / Clear. Refer to **DTC CHECK / CLEAR**.

      NEXT: Go to next step

6. **VISUAL INSPECTION**

   NEXT: Go to next step

7. **SELECT CHECK MODE DIAGNOSIS***
   a. Refer to Check Mode Procedure. Refer to **CHECK MODE PROCEDURE**.

      NEXT: Go to next step

8. **PROBLEM SYMPTOM CONFIRMATION**
   a. Refer to Road Test. Refer to **ROAD TEST**.

      RESULT

Result	Proceed to
Symptom does not occur	A
Symptom occurs	B

      B --> GO TO STEP 10

      A: Go to next step

9. **SYMPTOM SIMULATION**
   a. Refer to Symptom Simulation. Refer to **HOW TO PROCEED WITH TROUBLESHOOTING** .

      NEXT: Go to next step

10. **DTC CHECK***
   a. Refer to DTC Check / Clear. Refer to **DTC CHECK / CLEAR**.

      RESULT

Result	Proceed to
DTC is not output	A
DTC	

is output	B

B --> GO TO STEP 18

A: Go to next step

11. **BASIC INSPECTION**
    a. Refer to Automatic Transmission Fluid. Refer to **ADJUSTMENT** .
    b. Refer to Park/Neutral Position Switch. Refer to **ADJUSTMENT** .
    c. Refer to Shift Lever Assembly. Refer to **ADJUSTMENT** .

    NG --> GO TO STEP 21

    OK: Go to next step

12. **MECHANICAL SYSTEM TESTS**
    a. Refer to Mechanical System Tests. Refer to **MECHANICAL SYSTEM TESTS**.

    NG --> GO TO STEP 17

    OK: Go to next step

13. **HYDRAULIC TEST**
    a. Refer to Hydraulic Test. Refer to **HYDRAULIC TEST**.

    NG --> GO TO STEP 17

    OK: Go to next step

14. **MANUAL SHIFTING TEST**
    a. Refer to Manual Shifting Test. Refer to **MANUAL SHIFTING TEST**.

    NG --> GO TO STEP 16

    OK: Go to next step

15. **PROBLEM SYMPTOMS TABLE CHAPTER 1**
    a. Refer to Problem Symptoms Table chapter 1. Refer to **PROBLEM SYMPTOMS TABLE**.

    NG --> GO TO STEP 19

    OK: Go to next step

16. **PROBLEM SYMPTOMS TABLE CHAPTER 2**

a. Refer to Problem Symptoms Table chapter 2. Refer to **PROBLEM SYMPTOMS TABLE**.

NEXT: Go to next step

17. **COMPONENT INSPECTION**

NEXT --> GO TO STEP 21

18. **DTC CHART**
    a. Refer to Diagnostic Trouble Code Chart. Refer to **DIAGNOSTIC TROUBLE CODE CHART**.

NEXT: Go to next step

19. **CIRCUIT INSPECTION**

NEXT: Go to next step

20. **IDENTIFICATION OF PROBLEM**

NEXT: Go to next step

21. **REPAIR OR REPLACE**

NEXT: Go to next step

22. **CONFIRMATION TEST**

NEXT --> END

ROAD TEST

ROAD TEST

1. **PROBLEM SYMPTOM CONFIRMATION**
    a. Based on the result of the customer problem analysis, try to reproduce the symptoms. If the problem is that the transaxle does not shift up or down, or the shift point is too high or too low, conduct the following road test referring to the automatic shift schedule and attempt to duplicate the problem symptoms.
2. **ROAD TEST**
    a. Perform a road test.

WARNING: **Check for safety before performing any tests.**

NOTE:

- **Be sure to inspect and adjust the engine before performing**

these tests.

- **Perform the road test with the engine coolant temperature between 60 and 100°C (140 and 212°F) and the ATF temperature between 50 and 100°C (122 and 212°F).**
- **Perform these tests with the air conditioning and cruise control off.**

Inspection	Procedure
Transmission Control Switch Test	With the vehicle stationary and the shift lever in D, move the shift lever to S and return it to D. Check that the meter display changes from D to the appropriate S range and then back again.
S Position Test	With the vehicle stationary and the shift lever in S, move the shift lever to "+" and "-". Check that the meter display changes between S ranges properly.
D Position Shift Test	While driving the vehicle normally, check that the transmission shifts up and down through each gear properly.
	While driving

Lock-up Function	on a level surface at a constant speed in the lock-up range (90 km/h (56 mph) or more) with the shift lever in D, lightly depress the accelerator pedal and check that the engine speed does not change abruptly.
P Position Test	Stop the vehicle on an incline (approximately 5° or more). Then move the shift lever to P and release the parking brake. Check that the parking lock pawl holds the vehicle in place.
Abnormal Noise and Vibration	Check for abnormal noise and vibration while driving the vehicle forward and backward, and during shift operations.
Fluid Leakage	After performing all other road test inspections, check for fluid leakage.

MECHANICAL SYSTEM TESTS

MECHANICAL SYSTEM TESTS

1. **STALL SPEED TEST**

HINT:

This test is to check the overall performance of the engine and transaxle.

WARNING:

- **Driving test should be done on a paved surface (a surface that is not slippery).**
- **To ensure safety, perform this test in an open and level area that provides good traction.**
- **The stall speed test should always be performed with at least 2 people. One person should observe the condition of the wheels and wheel chocks while the other is performing the test.**

NOTE: **Do not perform the stall speed test for longer than 5 seconds.**

a. Connect the Techstream to the DLC3.
b. Run the vehicle until the transmission fluid temperature has reached 50 to 80°C (122 to 176°F).
c. Allow the engine to idle with the air conditioning and headlights off.
d. Chock all 4 wheels.
e. Set the parking brake and keep the brake pedal depressed firmly with your left foot.
f. Move the shift lever to D.
g. Depress the accelerator pedal as much as possible with your right foot.
h. Read the engine speed (stall speed) and release the accelerator pedal immediately.

Standard value

Stall Speed	
2720 RPM	+ 200 RPM
	- 490 RPM

EVALUATION

Test Result	Possible Cause
	• Engine

Stall speed is lower than standard value	power output may be insufficient • Stator one-way clutch is not operating properly **HINT:** If the value is less than the specified value by 600 RPM or more, the torque converter could be faulty.
Stall speed is higher than standard value	• Line pressure is too low • Clutch No. 1 (C1) is slipping • One-way clutch (F1) is not operating properly • Improper fluid level

2. **SHIFT TIME LAG TEST**

HINT:

When the shift lever is moved while the engine is idling, there will be a certain time lapse or lag before the shock can be felt. This is used for checking the condition of the clutch, and brake.

a. Connect the Techstream to the DLC3.
b. Run the vehicle until the transmission fluid temperature has reached 50 to 80°C (122 to 176°F).
c. Allow the engine to idle with the air conditioning off.
d. Set the parking brake and keep the brake pedal depressed firmly.
e. Check the D position time lag.
    1. Move the shift lever to N and wait for 1 minute.

2. Move the shift lever to D and measure the time until the shock is felt.
3. Repeat the 2 steps above 3 times, and calculate the average time of the 3 tests.

f. Check the R position time lag.
1. Move the shift lever to N and wait for 1 minute.
2. Move the shift lever to R and measure the time until the shock is felt.
3. Repeat the 2 steps above 3 times, and calculate the average time of the 3 tests.

Standard value

D position time lag is less than 1.2 seconds

R position time lag is less than 1.5 seconds

EVALUATION (IF N TO D OR N TO R TIME LAG IS LONGER THAN THE SPECIFIED TIME)

Test Result	Possible Cause
D position time lag exceeds standard value	• Line pressure is too low • Clutch No. 1 (C1) is worn • One-way clutch (F1) is not operating properly
R position time lag exceeds standard value	• Line pressure is too low • Brake No. 2 (B2) is worn • Brake No. 3 (B3) is worn

HYDRAULIC TEST

HYDRAULIC TEST

1. **PERFORM HYDRAULIC TEST**
    a. Measure the line pressure.

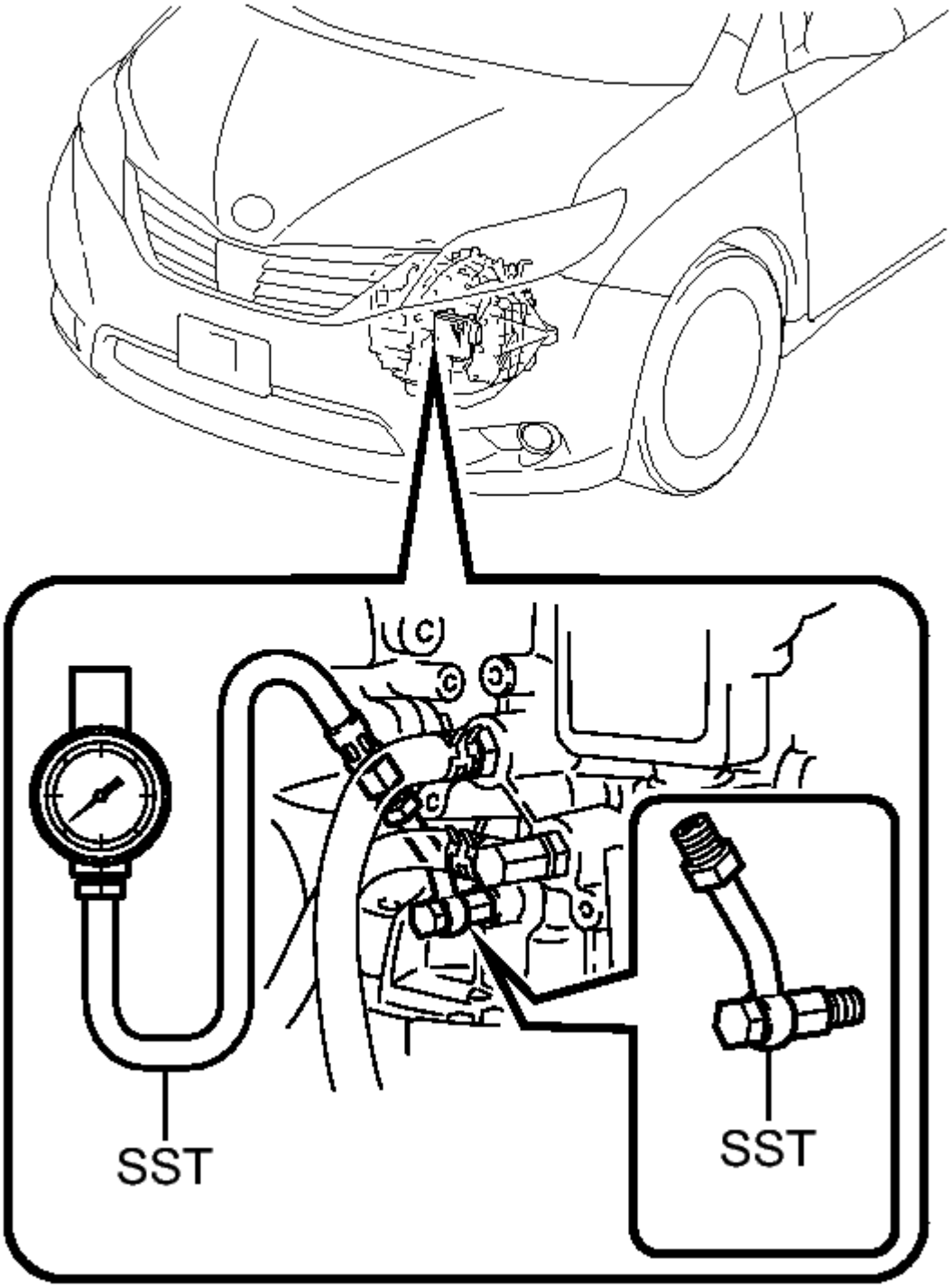

Fig. 7: Measuring Line Pressure Using SST
Courtesy of TOYOTA MOTOR SALES, U.S.A., INC.

WARNING: The line pressure test should always be carried out with at least 2 people. One person should observe the condition of

wheels and wheel chocks while the other is performing the test.

NOTE:

- **Perform a test at the normal operating Automatic Transmission Fluid (ATF) temperature: 50 to 80°C (122 to 176°F)**
- **Be careful to prevent the SST hose from interfering with the exhaust pipe.**
- **This check must be conducted after checking and confirming that the engine is normal.**
- **Perform the test with the A/C off.**
- **Do not perform the stall test for longer than 5 seconds.**

1. Warm up the Automatic Transmission Fluid (ATF).
2. Lift the vehicle up.
3. Remove the engine under cover.
4. Remove the test plug on the transaxle case front left side and install the SST.
   - **SST: 09992-00095**
     09992-00231
     09992-00271
5. Lower the vehicle.
6. Fully apply the parking brake and chock the 4 wheels.
7. Connect the Techstream to the DLC3.
8. Start the engine.
9. Enter the following menus: Powertrain / ECT / Active Test / Control the Shift Position.
10. Move the shift lever to D, and then use the Techstream to hold 3rd gear using Active Test. Measure the line pressure while the engine is idling.

    Specified Line Pressure

Condition	**D Position kPa (kgf/cm^2 , psi)**
Idling	360 to 430 kPa (3.7 to 4.4 kgf/cm^2 , 52 to 62 psi)

11. Turn the ignition switch off.

12. Disconnect the connector of the TCM.

    HINT:

    Disconnect the connector only when performing the D position stall test.

13. Start the engine.
14. Firmly depress the brake pedal, move the shift lever to D, depress the accelerator pedal all the way down, and check the line pressure while the stall test is performed.

    Specified Line Pressure

Condition	**D Position kPa (kgf/cm^2, psi)**
Stall test	1160 to 1350 kPa (11.8 to 13.8 kgf/cm^2, 168 to 196 psi)

15. Turn the ignition switch off.
16. Connect the TCM connector, depress the brake pedal firmly, move the shift lever to R, and check the line pressure while the engine is idling and during the stall test.

    Specified Line Pressure

Condition	**R Position kPa (kgf/cm^2, psi)**
Idling	800 to 950 kPa (8.2 to 9.7 kgf/cm^2, 116 to 138 psi)
	1900 to 2200 kPa (19.4 to

Stall test	22.4 kgf/cm^2 , 276 to 319 psi)

17. Remove the SST, install the test plug.
18. Clear the DTCs.

EVALUATION

Test Result	Possible Cause
Measured values are higher than the specified value in all positions	• Shift solenoid valve (SLT) defective • Regulator valve defective
Measured values are lower than the specified value in all positions	• Shift solenoid valve (SLT) defective • Regulator valve defective • Oil pump defective
Pressure is low in D only	• D position circuit fluid leak • Clutch No. 1 (C1) defective
Pressure is low in	• R position circuit fluid leak • Brake No. 2

R only	(B2) defective • Brake No. 3 (B3) defective

MANUAL SHIFTING TEST

MANUAL SHIFTING TEST

1. **PERFORM MANUAL SHIFTING TEST**

   HINT:

   - Using this test, it can be determined whether a problem is in an electrical circuit or if it is a mechanical problem in the transaxle.
   - If any abnormalities are found in the following test, the problem is in the transaxle itself.

   a. Disconnect the connector of the TCM.

      HINT:

      It is possible to deactivate the electrical shift control by disconnecting the TCM connector. The gears can then be changed mechanically with the shift lever.

   b. Drive with the TCM connector disconnected. Move the shift lever to each position to check whether the gear changes as shown in the table below.

Shift Lever Position	Gear
P	P
R	R
D	3rd No Shift (Gears will not change)

   c. Connect the connector of the TCM.

   d. Clear the DTCs. Refer to **DTC CHECK / CLEAR**.

REGISTRATION

REGISTRATION

NOTE:

- **When the automatic transaxle is replaced, the transaxle compensation code must be input into the TCM (proceed to Procedure 1). After the automatic transaxle is reinstalled, the Quick Response (QR) code label will be positioned where the code cannot be read. Therefore, before reinstalling the automatic transaxle, record the transaxle compensation codes or input them in the Techstream.**
- **When the TCM is replaced, the existing transaxle compensation codes must be input into the new TCM (proceed to Procedure 2).**

1. **INPUT TRANSAXLE COMPENSATION CODE INTO TCM (Procedure 1)**

NOTE: **Transaxle compensation codes are unique, 60-digit alphanumeric values printed on a QR label on the transaxle. If an incorrect transaxle compensation code is input into the TCM, shift shock may occur.**

a. Record the transaxle compensation code specified on the QR label.

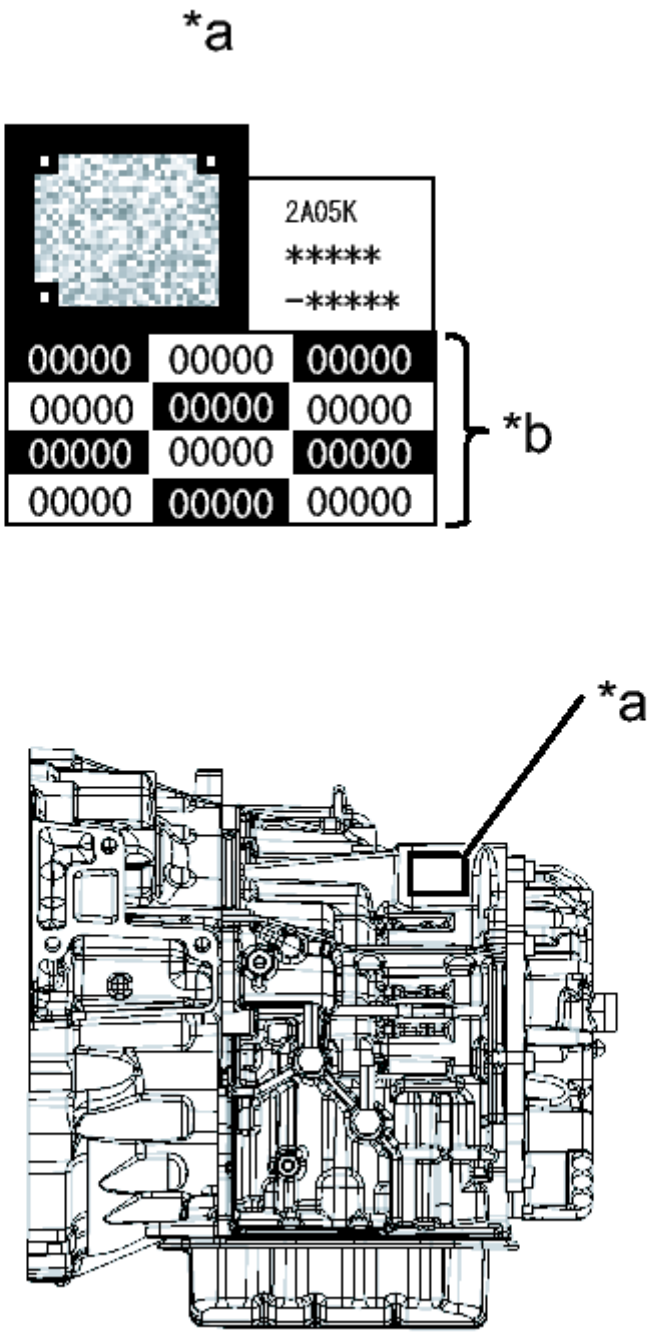

Fig. 8: Identifying Transaxle Compensation Code
Courtesy of TOYOTA MOTOR SALES, U.S.A., INC.

TEXT IN ILLUSTRATION

	QR Code

*a	label
*b	Transaxle Compensation Code

HINT:

The transaxle compensation code is imprinted on the QR label.

b. Move the shift lever to N or P.
c. Connect the Techstream to the DLC3.
d. Turn the ignition switch to ON.
e. Turn the Techstream on.

NOTE: Do not start the engine.

f. Enter the following menus: Powertrain / ECT / Utility / A/T Code Registration.
g. Select "Set Compensation Code".
h. Register the compensation code.
   1. Press "Input".
   2. Manually input the transaxle compensation code. The code is a 60-digit alphanumeric value printed on the QR label. After inputting the code, press "OK".
i. Check that the compensation code displayed on the screen is correct by comparing it with the 60-digit alphanumeric value on the QR label.

NOTE: If an incorrect transaxle compensation code is input into the TCM, shift shock will occur.

j. Press "NEXT" to set the compensation code to the TCM.

HINT:

- If the registration process fails, the compensation code may be incorrect. Check the compensation code again.
- If the attempted compensation code is correct, a problem with the wire harness or a bad connection with the DLC3 may cause a registration failure. Check the wire harness and the DLC3 connection. If no problem is found, the TCM may be malfunctioning. Check the TCM and repeat this operation.

k. Press "EXIT".

2. **TRANSFER TRANSAXLE COMPENSATION CODE (Procedure 2)**

NOTE: Transaxle compensation codes are 60-digit alphanumeric values imprinted on a QR label on the transaxle. If an incorrect transaxle compensation

code is input into the TCM, shift shock may occur.

HINT:

The following operation is available for use with TCMs that can transmit the registered transaxle compensation code to the Techstream.

a. Move the shift lever to N or P.
b. Connect the Techstream to the DLC3.
c. Turn the ignition switch to ON.
d. Turn the Techstream on.

NOTE: Do not start the engine.

HINT:

The transaxle compensation code is imprinted on the QR label.

e. Read the transaxle compensation code.
    1. Enter the following menus: Powertrain / ECT / Utility / A/T Code Registration.
    2. Select "Read Compensation Code".
    3. Press "Save".
    4. Press "Save" or "Overwrite".

    HINT:

    Press "Overwrite".

    NOTE: Do not use the code specified on the transaxle QR label even if the transaxle compensation code cannot be read using the Techstream. The code printed on an in-service transaxle may not match its current characteristics. Replace the TCM with a new one and perform a road test to allow the TCM to learn.

    5. Press "EXIT".
    6. Turn the ignition switch off.
f. Replace the TCM.
g. Set the transaxle compensation code.
    1. Turn the ignition switch to ON.
    2. Turn the Techstream on.
    3. Enter the following menus: Powertrain / ECT / Utility / A/T Code Registration.
    4. Select "Set Compensation Code".

5. Press "Open".
6. Press "Open" again to proceed.
7. Press "Exit".

INITIALIZATION

INITIALIZATION

1. **RESET TRANSAXLE COMPENSATION CODE**

NOTE:

- **If the following parts have been replaced, initialize the TCM and perform the following "Reset Memory" and "Perform Road Test to Allow TCM to learn" steps.**

  - Valve body assembly

  - Shift solenoid valve SL3

  - Shift solenoid valve SL4

  - TCM

- **The transaxle compensation code can only be initialized with the Techstream.**

HINT:

The TCM memorizes the condition that the ECT controls the automatic transaxle assembly according to those characteristics. Therefore, when the automatic transaxle assembly, or TCM has been replaced, it is necessary to reset the memory so that the TCM can memorize the new information. Reset procedure is as follows:

a. Move the shift lever to N or P.
b. Turn the ignition switch off.
c. Connect the Techstream to the DLC3.
d. Turn the ignition switch to ON.
e. Turn the Techstream on.
f. Enter the following menus: Powertrain / ECT / Utility / A/T Code Reset.
g. Press "Next" again to proceed.

NOTE: **After the transaxle compensation code is initialized, perform the following "Reset Memory" and "Perform Road Test to Allow TCM to learn" steps.**

h. Press "Exit".

2. **PERFORM ROAD TEST TO ALLOW TCM TO LEARN**

NOTE: Perform the following procedure while strictly observing all traffic laws and speed limits.

a. Warm up the engine.
b. Turn the ignition switch off.
c. Connect the Techstream to the DLC3.
d. Turn the ignition switch to ON.
e. Turn the Techstream on.
f. Enter the following menus: Powertrain / ECT / Data List / All Data / Throttle Position from EFI.
g. From a standstill, achieve highest possible speed with the accelerator pedal opened 15% or less. Keep the accelerator pedal angle steady while driving the vehicle.

HINT:

"Throttle Position from EFI": 15% or less

h. Repeat the previous step until shift shock no longer occurs.
i. From a standstill, achieve highest possible speed with the accelerator pedal opened 25% to 35%. Keep the accelerator pedal angle steady while driving the vehicle.

HINT:

"Throttle Position from EFI": 25% to 35%

j. Repeat the previous step until shift shock no longer occurs.

3. **RESET MEMORY**

NOTE: Reset Memory can be performed only with the Techstream.

HINT:

The TCM (ECT) memorizes the vehicle conditions when controlling the automatic transaxle assembly and engine assembly.

Therefore, when the automatic transaxle assembly, valve body assembly, shift solenoid valve SL3, shift solenoid valve SL4, or TCM has been replaced, it is necessary to reset the memory so that the TCM can memorize the new information.

a. Reset procedure is as follows.
    1. Turn the ignition switch off.

2. Connect the Techstream to the DLC3.
3. Turn the ignition switch to ON.
4. Turn the Techstream on.
5. Enter the following menus: "Powertrain / ECT / Utility / Reset Memory". Then, press "Next".

NOTE: **After performing Reset Memory, be sure to perform "Perform Road Test to Allow TCM to Learn" described earlier.**

MONITOR DRIVE PATTERN

MONITOR DRIVE PATTERN

1. **TEST MONITOR DRIVE PATTERN FOR ECT**

WARNING: **Perform this drive pattern on a level surface and strictly observe the posted speed limits and traffic laws while driving.**

HINT:

Performing this drive pattern is one method to simulate the TCM (ECT) malfunction detection conditions.

Some DTCs may not be detected through ordinary, everyday driving. Also, DTCs may not be detected through this drive pattern.

a. Preparation for driving
   1. Warm up the engine sufficiently (engine coolant temperature is 60°C (140°F) or higher).
   2. Drive the vehicle when the atmospheric temperature is -10°C (14°F) or higher.

      Some malfunctions are not detected when the atmospheric temperature is less than -10°C (14°F).

b. Drive pattern
   1. Drive the vehicle through all the gears.

      Stop --> 1st --> 2nd --> 3rd --> 4th --> 5th --> 6th --> 6th (lock-up ON).

   2. Confirm engine braking using the S position. While driving with S6 range selected and 6th gear operating with lock-up on, move the shift lever toward "-" to downshift from 6 to 5, 5 to 4, 4 to 3, 3 to 2, 2 to 1.
   3. Repeat the above drive pattern three times or more.

NOTE:

- **When using the Techstream, the monitor status can be checked in the Data List. Refer to <u>DATA LIST / ACTIVE TEST</u>.**

- **In the event that the drive pattern must be interrupted (due to traffic conditions or other factors), the drive pattern can be resumed and, in most cases, the monitor can be completed.**

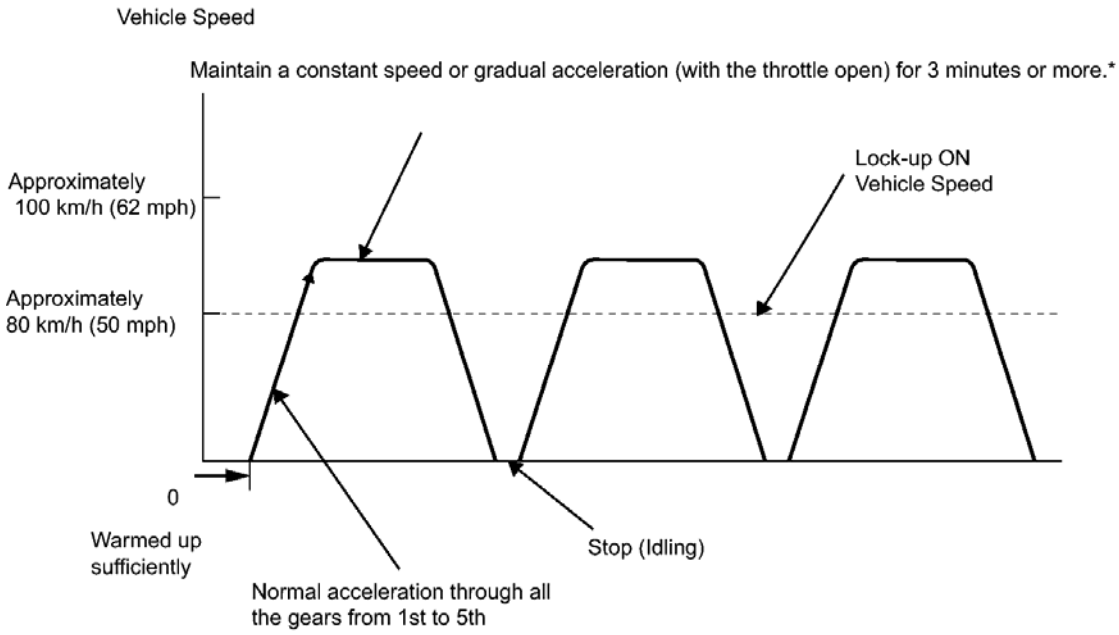

P

Fig. 9: Identifying Drive Pattern And Speed
Courtesy of TOYOTA MOTOR SALES, U.S.A., INC.

HINT:

*: Drive the vehicle at a speed in top gear that will cause lock-up to engage. The vehicle can be driven at a speed lower than that in the above diagram under the lock-up condition.

NOTE: **It is necessary to drive the vehicle for approximately 30 minutes to detect DTC P0711 (ATF temperature sensor malfunction).**

PROBLEM SYMPTOMS TABLE

PROBLEM SYMPTOMS TABLE

HINT:

- Use the table below to help determine the cause of problem symptoms. If multiple suspected areas are listed, the potential causes of the symptoms are listed in order of probability in the "Suspected Area" column of the table. Check each symptom by checking the suspected areas in the order they are listed. Replace parts as necessary.

- The Matrix Chart is divided into 2 chapters. When troubleshooting, check Chapter 1 first. If instructions are given in Chapter 1 to proceed to 2, proceed as instructed.
- If the instruction "Proceed to next suspected area shown in problem symptoms table" is given in the flowchart for each circuit, proceed to the next suspected area in the table.
- If the problem still occurs even though there are no malfunctions in any of the circuits, check the TCM and replace it if necessary.
- *1: When the circuit is defective, a DTC may be output.

1. CHAPTER 1: ELECTRONIC CIRCUIT MATRIX CHART

Symptom	Suspected Area	See
No up-shift (1st to 2nd)	Shift solenoid valve (SL3) circuit*1	Refer to **DTC P0798: Pressure Control Solenoid "C" Electrical (Shift Solenoid Valve SL3)**
	TCM	Refer to **ELECTRONIC CIRCUIT INSPECTION PROCEDURE**
No up-shift (2nd to 3rd)	Shift solenoid valve (SL4) circuit*1	Refer to **DTC P2810: Pressure Control Solenoid "G" Electrical (Shift Solenoid Valve SL4)**
	TCM	Refer to **ELECTRONIC CIRCUIT INSPECTION PROCEDURE**
No up-shift (3rd to 4th)	Shift solenoid valve (SL2) circuit*1	Refer to **DTC P0778: Pressure Control Solenoid "B" Electrical (Shift Solenoid Valve SL2)**
	Engine coolant temperature sensor circuit*1	Refer to **DIAGNOSTIC TROUBLE CODE CHART**
	TCM	Refer to **ELECTRONIC CIRCUIT INSPECTION PROCEDURE**
No up-shift (4th to 5th)	Shift solenoid valve (SL1) circuit*1	Refer to **DTC P0748: Pressure Control Solenoid "A" Electrical (Shift Solenoid Valve SL1)**
	Shift solenoid valve (SL4) circuit*1	Refer to **DTC P2810: Pressure Control Solenoid "G" Electrical (Shift Solenoid Valve SL4)**
	Engine coolant temperature sensor circuit*1	Refer to **DIAGNOSTIC TROUBLE CODE CHART**
	TCM	Refer to **ELECTRONIC CIRCUIT INSPECTION PROCEDURE**
No up-shift (5th to 6th)	Engine coolant temperature sensor circuit*1	Refer to **DIAGNOSTIC TROUBLE CODE CHART**
	Shift solenoid valve (SL3) circuit*1	Refer to **DTC P0798: Pressure Control Solenoid "C" Electrical (Shift Solenoid Valve SL3)**
	Shift solenoid valve (SL4) circuit*1	Refer to **DTC P2810: Pressure Control Solenoid "G" Electrical (Shift**

		Solenoid Valve SL4)
	TCM	Refer to **ELECTRONIC CIRCUIT INSPECTION PROCEDURE**
No down-shift (6th to 5th)	Shift solenoid valve (SL4) circuit*1	Refer to **DTC P2810: Pressure Control Solenoid "G" Electrical (Shift Solenoid Valve SL4)**
	TCM	Refer to **ELECTRONIC CIRCUIT INSPECTION PROCEDURE**
No down-shift (5th to 4th)	Shift solenoid valve (SL1) circuit*1	Refer to **DTC P0748: Pressure Control Solenoid "A" Electrical (Shift Solenoid Valve SL1)**
	TCM	Refer to **ELECTRONIC CIRCUIT INSPECTION PROCEDURE**
No down-shift (4th to 3rd)	Shift solenoid valve (SL2) circuit*1	Refer to **DTC P0778: Pressure Control Solenoid "B" Electrical (Shift Solenoid Valve SL2)**
	Shift solenoid valve (SL4) circuit*1	Refer to **DTC P2810: Pressure Control Solenoid "G" Electrical (Shift Solenoid Valve SL4)**
	TCM	Refer to **ELECTRONIC CIRCUIT INSPECTION PROCEDURE**
No down-shift (3rd to 2nd)	Shift solenoid valve (SL4) circuit*1	Refer to **DTC P2810: Pressure Control Solenoid "G" Electrical (Shift Solenoid Valve SL4)**
	Shift solenoid valve (SL3) circuit*1	Refer to **DTC P0798: Pressure Control Solenoid "C" Electrical (Shift Solenoid Valve SL3)**
	TCM	Refer to **ELECTRONIC CIRCUIT INSPECTION PROCEDURE**
No down-shift (2nd to 1st)	Shift solenoid valve (SL3) circuit*1	Refer to **DTC P0798: Pressure Control Solenoid "C" Electrical (Shift Solenoid Valve SL3)**
	TCM	Refer to **ELECTRONIC CIRCUIT INSPECTION PROCEDURE**
No lock-up	Shift solenoid valve (SLU) circuit*1	Refer to **DTC P2759: Torque Converter Clutch Pressure Control Solenoid Control Circuit Electrical (Shift Solenoid Valve SLU)**
	Shift solenoid valve (SL) circuit*1	Refer to **DTC P2769: Short in Torque Converter Clutch Solenoid Circuit (Shift Solenoid Valve SL); DTC P2770: Open in Torque Converter Clutch Solenoid Circuit (Shift Solenoid Valve SL)**
	Engine coolant temperature	Refer to **DIAGNOSTIC TROUBLE**

	sensor circuit*1	**CODE CHART**
	Stop light switch circuit*1	Refer to **DTC P0724: Brake Switch "B" Circuit High**
	Input speed sensor NT circuit*1	Refer to **DTC P0715: Input / Turbine Speed Sensor Circuit Malfunction; DTC P0717: Input Speed Sensor Circuit No Signal**
	TCM	Refer to **ELECTRONIC CIRCUIT INSPECTION PROCEDURE**
No lock-up off	TCM	Refer to **ELECTRONIC CIRCUIT INSPECTION PROCEDURE**
Shift point too high or too low	Shift solenoid valve (SLT) circuit*1	Refer to **DTC P2716: Pressure Control Solenoid "D" Electrical (Shift Solenoid Valve SLT)**
	Input speed sensor NT circuit*1	Refer to **DTC P0715: Input / Turbine Speed Sensor Circuit Malfunction; DTC P0717: Input Speed Sensor Circuit No Signal**
	Output speed sensor NC circuit*1	Refer to **DTC P0791: Intermediate Shaft Speed Sensor "A" Circuit; DTC P0793: Intermediate Shaft Speed Sensor "A"**
	Accelerator pedal position sensor circuit*1	Refer to **DIAGNOSTIC TROUBLE CODE CHART**
	ATF temperature sensor circuit*1	Refer to **DTC P0712: Transmission Fluid Temperature Sensor "A" Circuit Low Input; DTC P0713: Transmission Fluid Temperature Sensor "A" Circuit High Input**
	TCM	Refer to **ELECTRONIC CIRCUIT INSPECTION PROCEDURE**
Up-shift from 3rd to 4th while engine is cold	Engine coolant temperature sensor circuit*1	Refer to **DIAGNOSTIC TROUBLE CODE CHART**
	TCM	Refer to **ELECTRONIC CIRCUIT INSPECTION PROCEDURE**
Up-shift from 4th to 5th while engine is cold	Engine coolant temperature sensor circuit*1	Refer to **DIAGNOSTIC TROUBLE CODE CHART**
	TCM	Refer to **ELECTRONIC CIRCUIT INSPECTION PROCEDURE**
No gear change by moving shift lever to "+" or "-" while in S	Transmission control switch circuit	Refer to **Transmission Control Switch Circuit**
	ECM	Refer to **ELECTRONIC CIRCUIT INSPECTION PROCEDURE**
	TCM	Refer to **ELECTRONIC CIRCUIT INSPECTION PROCEDURE**

Harsh engagement (N to D)	Shift solenoid valve (SL1) circuit*1	Refer to **DTC P0748: Pressure Control Solenoid "A" Electrical (Shift Solenoid Valve SL1)**
	TCM	Refer to **ELECTRONIC CIRCUIT INSPECTION PROCEDURE**
Harsh engagement (Lock-up)	Input speed sensor NT circuit*1	Refer to **DTC P0715: Input / Turbine Speed Sensor Circuit Malfunction; DTC P0717: Input Speed Sensor Circuit No Signal**
	Output speed sensor NC circuit*1	Refer to **DTC P0791: Intermediate Shaft Speed Sensor "A" Circuit; DTC P0793: Intermediate Shaft Speed Sensor "A"**
	Shift solenoid valve (SLU) circuit*1	Refer to **DTC P2759: Torque Converter Clutch Pressure Control Solenoid Control Circuit Electrical (Shift Solenoid Valve SLU)**
	TCM	Refer to **ELECTRONIC CIRCUIT INSPECTION PROCEDURE**
Harsh engagement (Any driving position)	Accelerator pedal position sensor circuit*1	Refer to **DIAGNOSTIC TROUBLE CODE CHART**
	Shift solenoid valve (SLT) circuit*1	Refer to **DTC P2716: Pressure Control Solenoid "D" Electrical (Shift Solenoid Valve SLT)**
	Output speed sensor NC circuit*1	Refer to **DTC P0791: Intermediate Shaft Speed Sensor "A" Circuit; DTC P0793: Intermediate Shaft Speed Sensor "A"**
	Input speed sensor NT circuit*1	Refer to **DTC P0715: Input / Turbine Speed Sensor Circuit Malfunction; DTC P0717: Input Speed Sensor Circuit No Signal**
	TCM	Refer to **ELECTRONIC CIRCUIT INSPECTION PROCEDURE**
Poor acceleration	Shift solenoid valve (SLT) circuit*1	Refer to **DTC P2716: Pressure Control Solenoid "D" Electrical (Shift Solenoid Valve SLT)**
	TCM	Refer to **ELECTRONIC CIRCUIT INSPECTION PROCEDURE**
No engine braking	TCM	Refer to **ELECTRONIC CIRCUIT INSPECTION PROCEDURE**
No kick-down	TCM	Refer to **ELECTRONIC CIRCUIT INSPECTION PROCEDURE**
Engine stalls when starting off or stopping	TCM	Refer to **ELECTRONIC CIRCUIT INSPECTION PROCEDURE**

Shifting malfunction	Park/neutral position switch circuit*1	Refer to **DTC P0705: Transmission Range Sensor Circuit Malfunction (PRNDL Input)**
	Transmission control switch circuit	Refer to **Transmission Control Switch Circuit**
	ECM	Refer to **ELECTRONIC CIRCUIT INSPECTION PROCEDURE**
	TCM	Refer to **ELECTRONIC CIRCUIT INSPECTION PROCEDURE**
Shifting malfunction (Vehicle is stuck in 3rd or 5th gear)	ECU power source circuit	Refer to **ECU Power Source Circuit**
	TCM	Refer to **ELECTRONIC CIRCUIT INSPECTION PROCEDURE**
Slip or shudder (5th to 6th and 6th to 5th)	Shift solenoid valve (SLT) circuit*1	Refer to **DTC P2716: Pressure Control Solenoid "D" Electrical (Shift Solenoid Valve SLT)**
Initial acceleration or subsequent acceleration is improper. Vehicle is stuck in a gear (1st to 6th).	Shift solenoid valve (SL1) circuit*1	Refer to **DTC P0748: Pressure Control Solenoid "A" Electrical (Shift Solenoid Valve SL1)**
	Shift solenoid valve (SLT) circuit*1	Refer to **DTC P2716: Pressure Control Solenoid "D" Electrical (Shift Solenoid Valve SLT)**
	TCM	Refer to **ELECTRONIC CIRCUIT INSPECTION PROCEDURE**
Acceleration is improper when the gear is 4th or higher.	Shift solenoid valve (SL2) circuit*1	Refer to **DTC P0778: Pressure Control Solenoid "B" Electrical (Shift Solenoid Valve SL2)**
	Shift solenoid valve (SLT) circuit*1	Refer to **DTC P2716: Pressure Control Solenoid "D" Electrical (Shift Solenoid Valve SLT)**
	TCM	Refer to **ELECTRONIC CIRCUIT INSPECTION PROCEDURE**
Initial acceleration or subsequent acceleration is improper. Vehicle does not shift down (from 4th to 3rd). Vehicle is stuck in a gear (1st to 4th).	Shift solenoid valve (SL2) circuit*1	Refer to **DTC P0778: Pressure Control Solenoid "B" Electrical (Shift Solenoid Valve SL2)**
	TCM	Refer to **ELECTRONIC CIRCUIT INSPECTION PROCEDURE**
Acceleration is improper when the gear is 6th.	Shift solenoid valve (SL3) circuit*1	Refer to **DTC P0798: Pressure Control Solenoid "C" Electrical (Shift Solenoid Valve SL3)**
	TCM	Refer to **ELECTRONIC CIRCUIT INSPECTION PROCEDURE**
	Shift solenoid valve (SL4) circuit*1	Refer to **DTC P2810: Pressure Control Solenoid "G" Electrical (Shift Solenoid Valve SL4)**

Acceleration is improper when the gear is 3rd or 5th.	Shift solenoid valve (SLT) circuit*1	Refer to **DTC P2716: Pressure Control Solenoid "D" Electrical (Shift Solenoid Valve SLT)**
	TCM	Refer to **ELECTRONIC CIRCUIT INSPECTION PROCEDURE**
Initial acceleration or subsequent acceleration is improper. Vehicle does not shift down (from 3rd to 2nd). No up-shift (5th to 6th).	Shift solenoid valve (SL4) circuit*1	Refer to **DTC P2810: Pressure Control Solenoid "G" Electrical (Shift Solenoid Valve SL4)**
	TCM	Refer to **ELECTRONIC CIRCUIT INSPECTION PROCEDURE**

2. CHAPTER 2: ON-VEHICLE REPAIR AND OFF-VEHICLE REPAIR

Symptom	Suspected Area	See
Vehicle does not move in any forward or reverse positions.	Valve body assembly	Refer to **REMOVAL**
	Torque converter assembly	Refer to **INSPECTION**
Vehicle does not move with shift lever in R	Valve body assembly	Refer to **REMOVAL**
	Brake No. 2 (B2)	Refer to **COMPONENTS**
	Brake No. 3 (B3)	Refer to **COMPONENTS**
	Shift solenoid valve (SL4)*1	Refer to **DTC P2808: Pressure Control Solenoid "G" Performance (Shift Solenoid Valve SL4)**
No up-shift (1st to 2nd)	Valve body assembly	Refer to **REMOVAL**
	Brake No. 1 (B1)	Refer to **COMPONENTS**
	Shift solenoid valve (SL3)*1	Refer to **DTC P0796: Pressure Control Solenoid "C" Performance (Shift Solenoid Valve SL3)**
No up-shift (2nd to 3rd)	Valve body assembly	Refer to **REMOVAL**
	Brake No. 3 (B3)	Refer to **COMPONENTS**
	Shift solenoid valve (SL4)*1	Refer to **DTC P2808: Pressure Control Solenoid "G" Performance (Shift Solenoid Valve SL4)**
No up-shift (3rd to 4th)	Valve body assembly	Refer to **REMOVAL**
	Clutch No. 2 (C2)	Refer to **COMPONENTS**
	Shift solenoid valve (SL2)*1	Refer to **DTC P0776: Pressure Control Solenoid "B" Performance (Shift Solenoid Valve SL2)**
No up-shift (4th to 5th)	Valve body assembly	Refer to **REMOVAL**
	Brake No. 3 (B3)	Refer to **COMPONENTS**
	Shift solenoid valve (SL4)*1	Refer to **DTC P2808: Pressure Control Solenoid "G" Performance (Shift Solenoid Valve SL4)**
	Shift solenoid valve (SL1)*1	Refer to **DTC P0746: Pressure Control Solenoid "A" Performance (Shift Solenoid Valve SL1)**

No up-shift (5th to 6th)	Valve body assembly	Refer to **REMOVAL**
	Brake No. 1 (B1)	Refer to **COMPONENTS**
	Shift solenoid valve (SL3)*1	Refer to **DTC P0796: Pressure Control Solenoid "C" Performance (Shift Solenoid Valve SL3)**
	Shift solenoid valve (SL4)*1	Refer to **DTC P2808: Pressure Control Solenoid "G" Performance (Shift Solenoid Valve SL4)**
No down-shift (6th to 5th)	Brake No. 3 (B3)	Refer to **COMPONENTS**
	Shift solenoid valve (SL4)*1	Refer to **DTC P2808: Pressure Control Solenoid "G" Performance (Shift Solenoid Valve SL4)**
	Valve body assembly	Refer to **REMOVAL**
No down-shift (5th to 4th)	Shift solenoid valve (SL1)*1	Refer to **DTC P0746: Pressure Control Solenoid "A" Performance (Shift Solenoid Valve SL1)**
	Clutch No. 1 (C1)	Refer to **COMPONENTS**
	Valve body assembly	Refer to **REMOVAL**
No down-shift (4th to 3rd)	Brake No. 3 (B3)	Refer to **COMPONENTS**
	Shift solenoid valve (SL4)*1	Refer to **DTC P2808: Pressure Control Solenoid "G" Performance (Shift Solenoid Valve SL4)**
	Shift solenoid valve (SL2)*1	Refer to **DTC P0776: Pressure Control Solenoid "B" Performance (Shift Solenoid Valve SL2)**
	Valve body assembly	Refer to **REMOVAL**
No down-shift (3rd to 2nd)	Brake No. 1 (B1)	Refer to **COMPONENTS**
	Shift solenoid valve (SL3)*1	Refer to **DTC P0796: Pressure Control Solenoid "C" Performance (Shift Solenoid Valve SL3)**
	Shift solenoid valve (SL4)*1	Refer to **DTC P2808: Pressure Control Solenoid "G" Performance (Shift Solenoid Valve SL4)**
	Valve body assembly	Refer to **REMOVAL**
No down-shift (2nd to 1st)	Valve body assembly	Refer to **REMOVAL**
	Shift solenoid valve (SL3)*1	Refer to **DTC P0796: Pressure Control Solenoid "C" Performance (Shift Solenoid Valve SL3)**
No lock-up or No lock-up off	Valve body assembly	Refer to **REMOVAL**
	Torque converter assembly	Refer to **INSPECTION**
Harsh engagement (N to D)	Valve body assembly	Refer to **REMOVAL**
	C1 accumulator	Refer to **COMPONENTS**
	One-way clutch No. 1 (F1)	Refer to **COMPONENTS**
	Clutch No. 1 (C1)	Refer to **COMPONENTS**

	Shift solenoid valve (SL1)*1	Refer to **DTC P0746: Pressure Control Solenoid "A" Performance (Shift Solenoid Valve SL1)**
Harsh engagement (Lock-up)	Valve body assembly	Refer to **REMOVAL**
	Torque converter assembly	Refer to **INSPECTION**
	Shift solenoid valve (SLU)*1	Refer to **DTC P2757: Torque Converter Clutch Pressure Control Solenoid Performance (Shift Solenoid Valve SLU)**
Harsh engagement (N to R)	Valve body assembly	Refer to **REMOVAL**
	Brake No. 2 (B2)	Refer to **COMPONENTS**
	Brake No. 3 (B3)	Refer to **COMPONENTS**
	Shift solenoid valve (SL4)*1	Refer to **DTC P2808: Pressure Control Solenoid "G" Performance (Shift Solenoid Valve SL4)**
Harsh engagement (1 to 2 to 3 to 4 to 5 to 6)	Valve body assembly	Refer to **REMOVAL**
	Shift solenoid valve (SLT)*1	Refer to **DTC P2714: Pressure Control Solenoid "D" Performance (Shift Solenoid Valve SLT)**
Harsh engagement (1st to 2nd)	Valve body assembly	Refer to **REMOVAL**
	B1 accumulator	Refer to **COMPONENTS**
	Brake No. 1 (B1)	Refer to **COMPONENTS**
	Shift solenoid valve (SL3)*1	Refer to **DTC P0796: Pressure Control Solenoid "C" Performance (Shift Solenoid Valve SL3)**
Harsh engagement (2nd to 3rd)	Valve body assembly	Refer to **REMOVAL**
	B3 accumulator	Refer to **COMPONENTS**
	Brake No. 3 (B3)	Refer to **COMPONENTS**
	Shift solenoid valve (SL4)*1	Refer to **DTC P2808: Pressure Control Solenoid "G" Performance (Shift Solenoid Valve SL4)**
Harsh engagement (3rd to 4th)	Valve body assembly	Refer to **REMOVAL**
	C2 accumulator	Refer to **COMPONENTS**
	Clutch No. 2 (C2)	Refer to **COMPONENTS**
	Shift solenoid valve (SL2)*1	Refer to **DTC P0776: Pressure Control Solenoid "B" Performance (Shift Solenoid Valve SL2)**
Harsh engagement (4th to 5th)	Valve body assembly	Refer to **REMOVAL**
	B3 accumulator	Refer to **COMPONENTS**
	Brake No. 3 (B3)	Refer to **COMPONENTS**
	Shift solenoid valve (SL4)*1	Refer to **DTC P2808: Pressure Control Solenoid "G" Performance (Shift Solenoid Valve SL4)**
	Valve body assembly	Refer to **REMOVAL**

Harsh engagement (5th to 6th)	B1 accumulator	Refer to **COMPONENTS**
	Brake No. 1 (B1)	Refer to **COMPONENTS**
	Shift solenoid valve (SL3)*1	Refer to **DTC P0796: Pressure Control Solenoid "C" Performance (Shift Solenoid Valve SL3)**
Harsh engagement (6th to 5th)	Valve body assembly	Refer to **REMOVAL**
	B3 accumulator	Refer to **COMPONENTS**
	Brake No. 3 (B3)	Refer to **COMPONENTS**
	Shift solenoid valve (SL4)*1	Refer to **DTC P2808: Pressure Control Solenoid "G" Performance (Shift Solenoid Valve SL4)**
Slip or shudder (Forward and reverse: After warm-up)	Valve body assembly	Refer to **REMOVAL**
	Oil strainer	Refer to **COMPONENTS**
	Brake No. 1 (B1)	Refer to **COMPONENTS**
	Brake No. 2 (B2)	Refer to **COMPONENTS**
	Brake No. 3 (B3)	Refer to **COMPONENTS**
	One-way clutch No. 1 (F1)	Refer to **COMPONENTS**
	Clutch No. 1 (C1)	Refer to **COMPONENTS**
	Clutch No. 2 (C2)	Refer to **COMPONENTS**
Slip or shudder (Particular position: just after engine starts)	Torque converter assembly	Refer to **INSPECTION**
Slip or shudder (shift lever in R)	Brake No. 2 (B2)	Refer to **COMPONENTS**
	Brake No. 3 (B3)	Refer to **COMPONENTS**
Slip or shudder (1st)	One-way clutch No. 1 (F1)	Refer to **COMPONENTS**
	Clutch No. 1 (C1)	Refer to **COMPONENTS**
Slip or shudder (2nd)	Brake No. 1 (B1)	Refer to **COMPONENTS**
	Clutch No. 1 (C1)	Refer to **COMPONENTS**
Slip or shudder (3rd)	Brake No. 3 (B3)	Refer to **COMPONENTS**
	Clutch No. 1 (C1)	Refer to **COMPONENTS**
Slip or shudder (4th)	Clutch No. 1 (C1)	Refer to **COMPONENTS**
	Clutch No. 2 (C2)	Refer to **COMPONENTS**
Slip or shudder (5th)	Brake No. 3 (B3)	Refer to **COMPONENTS**
	Clutch No. 2 (C2)	Refer to **COMPONENTS**
Slip or shudder (6th)	Brake No. 1 (B1)	Refer to **COMPONENTS**
	Clutch No. 2 (C2)	Refer to **COMPONENTS**
No engine braking (1st)	Valve body assembly	Refer to **REMOVAL**
	Brake No. 2 (B2)	Refer to **COMPONENTS**
No engine braking (2nd)	Valve body assembly	Refer to **REMOVAL**
	Brake No. 1 (B1)	Refer to **COMPONENTS**
No engine braking (3rd)	Valve body assembly	Refer to **REMOVAL**
	Brake No. 3 (B3)	Refer to **COMPONENTS**

No engine braking (4th)	Valve body assembly	Refer to **REMOVAL**
	Clutch No. 2 (C2)	Refer to **COMPONENTS**
No kick-down	Valve body assembly	Refer to **REMOVAL**
Shift point too high or too low	Valve body assembly	Refer to **REMOVAL**
Poor acceleration (All positions)	Valve body assembly	Refer to **REMOVAL**
	Torque converter assembly	Refer to **INSPECTION**
Poor acceleration (6th)	Brake No. 1 (B1)	Refer to **COMPONENTS**
	Clutch No. 2 (C2)	Refer to **COMPONENTS**
Engine stalls when starting off or stopping	Valve body assembly	Refer to **REMOVAL**
	Torque converter assembly	Refer to **INSPECTION**

TERMINALS OF ECU

TERMINALS OF ECU

1. **TCM**

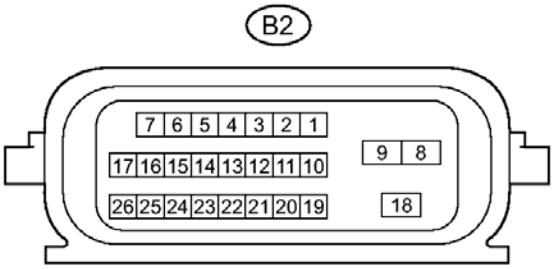

c

Fig. 10: ECU Connector Terminal Identification - TCM
Courtesy of TOYOTA MOTOR SALES, U.S.A., INC.

HINT:

Each TCM terminal standard voltage and resistance is shown in the table below.

In the table, first follow the information under "Condition". Look under "Terminal No. (Symbol)" for the terminals to be inspected. The standard voltage and resistance between the terminals is shown under "Specified Condition".

Use the illustration above as a reference for the TCM terminals.

Terminal No. (Symbol)	Wiring Color	Terminal Description	Condition	Specified Condition
B2-1 (BATT) - B2-8	G-R - BR	Battery (for measuring battery voltage	Always	11 to 14 V

(E1)		and for TCM memory)		
B2-3 (SPD) - B2-8 (E1)	LG - BR	Speed signal from combination meter	Vehicle speed 20 km/h (12 mph)	Pulse generation (See **Fig. 11**)
B2-6 (CAN+) - B2-8 (E1)	L - BR	CAN communication line	Ignition switch ON	Pulse generation (See **Fig. 12**)
B2-7 (CAN-) - B2-8 (E1)	R - BR	CAN communication line	Ignition switch ON	Pulse generation (See **Fig. 13**)
B2-8 (E1) - Body ground	BR - Body ground	Ground	Always	Below 1 ohms
B2-9 (E01) - Body ground	BR - Body ground	Ground	Always	Below 1 ohms
B2-10 (STA) - B2-8 (E1)	B - BR	Starter signal	Cranking (shift lever in P or N, Engine start)	11 to 14 V
			Ignition switch ON and shift lever in any position except P or N	Below 2 V
B2-11 (NSW) - B2-8 (E1)	P - BR	Park/neutral switch signal	Ignition switch ON and shift lever in P or N	Below 2 V
			Ignition switch ON and shift lever in any	11 to 14 V

			position except P or N	
B2-12 (STP) - B2-8 (E1)	W-L - BR	Stop light switch signal	Brake pedal is depressed	7.5 to 14 V
			Brake pedal is released	Below 1.5 V
B2-13 (IGSW) - B2-8 (E1)	G - BR	Ignition switch	Ignition switch ON	11 to 14 V
B2-15 (R) - B2-8 (E1)	R-B - BR	R shift position switch signal	Ignition switch ON and shift lever in R	11 to 14 V
			Ignition switch ON and shift lever in any position except R	Below 1 V
B2-16 (D) - B2-8 (E1)	Y - BR	D shift position switch signal	Ignition switch ON and shift lever in D or S	11 to 14 V
			Ignition switch ON and shift lever in any position except D and S	Below 1 V
B2-18 (+B) - B2-8 (E1)	L - BR	Power source of TCM	Ignition switch ON	11 to 14 V

a. Waveform 1

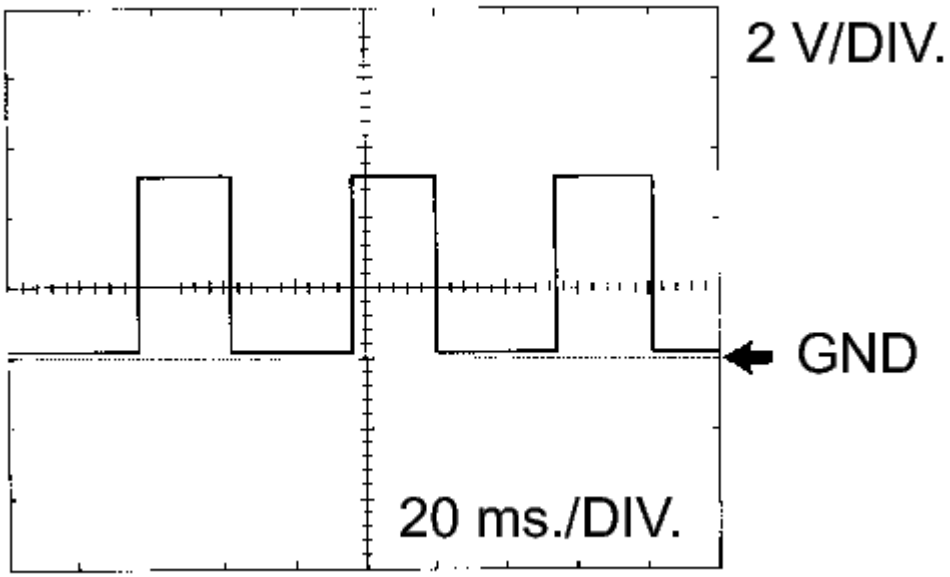

Fig. 11: Identifying Waveform 1
Courtesy of TOYOTA MOTOR SALES, U.S.A., INC.

Terminal	SPD - E1
Tool setting	2 V/DIV., 20 ms./DIV.
Vehicle condition	Vehicle speed 20 km/h (12 mph)

b. Waveform 2

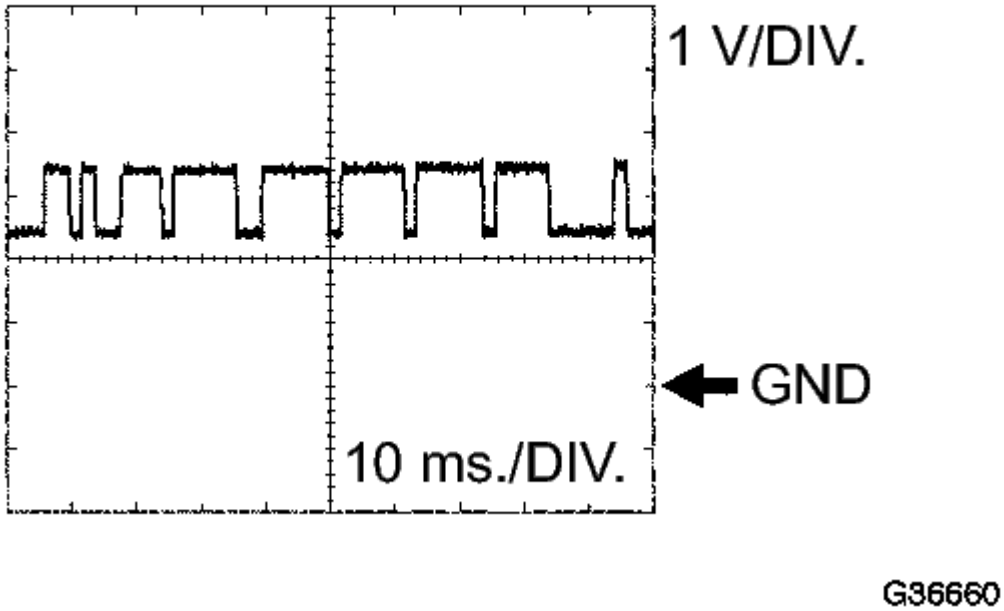

Fig. 12: Identifying Waveform 2
Courtesy of TOYOTA MOTOR SALES, U.S.A., INC.

Terminal	CAN+ - E1
Tool setting	1 V/DIV., 10 ms./DIV.
Vehicle condition	Engine is stopped, ignition switch ON

c. Waveform 3

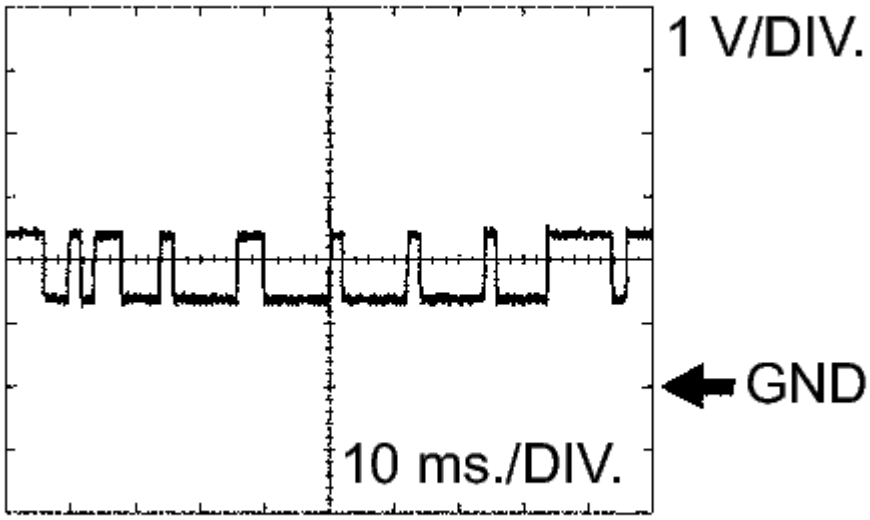

G36661

Fig. 13: Identifying Waveform 3
Courtesy of TOYOTA MOTOR SALES, U.S.A., INC.

Terminal	CAN- - E1
Tool setting	1 V/DIV., 10 ms./DIV.
Vehicle condition	Engine is stopped, ignition switch ON

2. **ECM**

HINT:

Each ECM terminal standard voltage is shown in the table below.

In the table, first follow the information under "Condition". Look under "Terminal No. (Symbol)" for the terminals to be inspected. The standard voltage between the terminals is shown under "Specified Condition".

Use the illustration below as a reference for the ECM terminals.

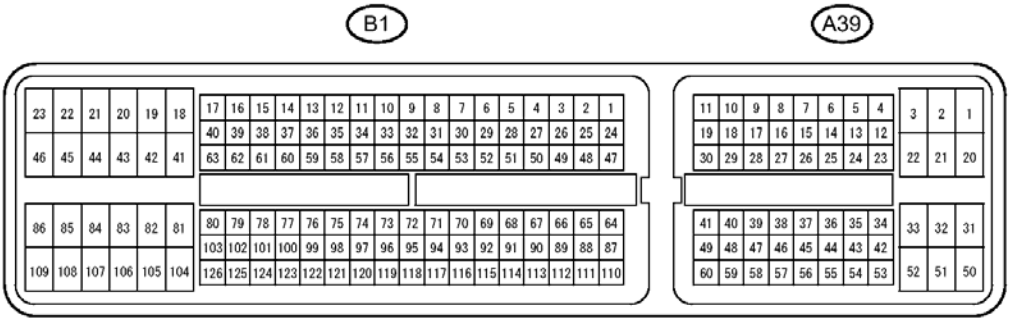

Fig. 14: ECM Connector Terminal Identification
Courtesy of TOYOTA MOTOR SALES, U.S.A., INC.

Terminal No. (Symbol)	Wiring Color	Terminal Description	Condition	Specified Condition
A39-25 (S) - B1-81 (E1)	W - BR	S shift position switch signal	Ignition switch ON and shift lever in S	11 to 14 V
			Ignition switch ON and shift lever in any position except S	Below 1 V
A39-27 (SFTD) - B1-81 (E1)	V - BR	Down shift switch signal	Ignition switch ON and shift lever in S	11 to 14 V
			Ignition switch ON and shift lever in "- " (Down shift)	Below 1 V
A39-38			Ignition switch ON and shift lever	11 to 14 V

(SFTU) - B1-81 (E1)	L - BR	Up shift switch signal	in S	
			Ignition switch ON and shift lever in "+" (Up shift)	Below 1 V

DIAGNOSIS SYSTEM

DIAGNOSIS SYSTEM

1. **DESCRIPTION**
   a. When troubleshooting On-Board Diagnostic (OBD II) vehicles, the vehicle must be connected to the OBD II scan tool (complying with SAE J1987). Various data output from the vehicle TCM can then be read.
   b. OBD II regulations require that the vehicle on-board computer illuminate the Malfunction Indicator Lamp (MIL) on the instrument panel when the computer detects a malfunction in:

P

Fig. 15: Identifying Malfunction Indicator Lamp
Courtesy of TOYOTA MOTOR SALES, U.S.A., INC.

1. The emission control system/components
2. The powertrain control components (which affect vehicle emissions)
3. The computer

In addition, the applicable Diagnostic Trouble Codes (DTCs) prescribed by SAE J2012 are recorded in the TCM memory.

When a malfunction does not reoccur, the MIL stays illuminated until the ignition switch is turned off, and the MIL turns off when the engine is started. However, the DTCs will remain recorded in the TCM memory.

c. To check DTCs, connect the Techstream to the Data Link Connector 3 (DLC3) of the vehicle. The Techstream displays DTCs, freeze frame data and a variety of engine data.

   The DTCs and freeze frame data can be cleared with the Techstream. Refer to **DTC CHECK / CLEAR**.

2. **NORMAL MODE AND CHECK MODE**
   a. The diagnosis system operates in "normal mode" during normal vehicle use. In normal mode, "2 trip detection logic" is used to ensure accurate detection of malfunctions. "Check mode" is also available to technicians as an option. In check mode, "1 trip detection logic" is used for simulating malfunction symptoms and increasing the system's ability to detect malfunctions, including intermittent malfunctions.
3. **2 TRIP DETECTION LOGIC**
   a. When a malfunction is first detected, the malfunction is temporarily stored in the TCM memory (1st trip). If the same malfunction is detected during the next drive cycle, the MIL is illuminated (2nd trip).
4. **FREEZE FRAME DATA**
   a. The TCM records vehicle and driving condition information as freeze frame data the moment a DTC is stored. When troubleshooting, freeze frame data can be helpful in determining whether the vehicle was running or stopped, whether the engine was warmed up or not, whether the air/fuel ratio was lean or rich, as well as other data recorded at the time of a malfunction.
   b. The Techstream records freeze frame data in 5 different instances: 1) 3 times before the DTC is set, 2) once when the DTC is set, and 3) once after the DTC is set. These sets of data can be used to simulate the vehicle condition around the time when the malfunction occurred. The data may help in finding the cause of the malfunction, or in judging if the DTC was caused by a temporary malfunction.

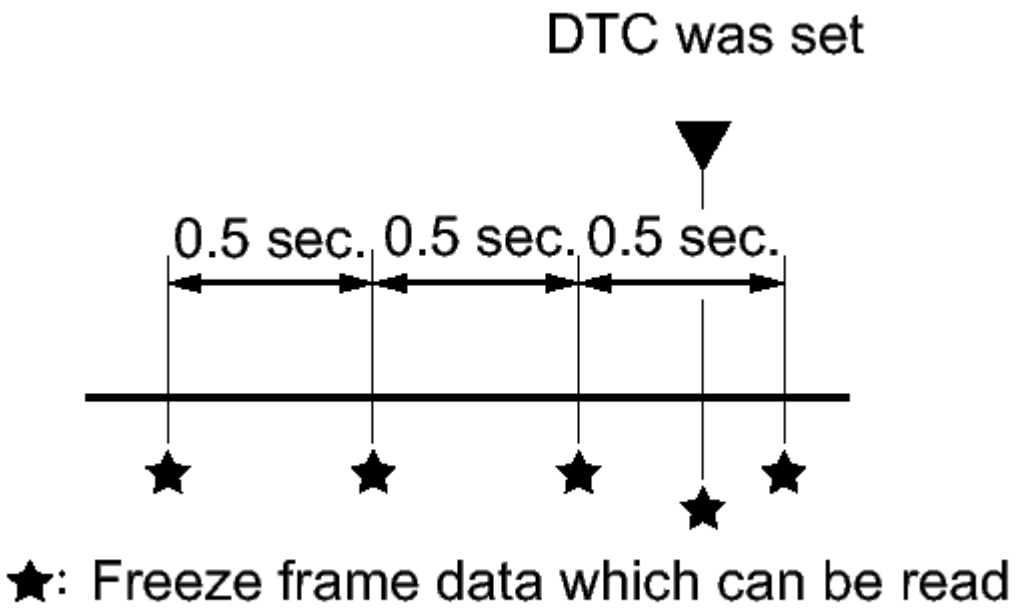

Fig. 16: Identifying Freeze Frame Data
Courtesy of TOYOTA MOTOR SALES, U.S.A., INC.

5. **CHECK DATA LINK CONNECTOR 3 (DLC3)**
   a. Check the DLC3. Refer to **GENERAL INFORMATION**
6. **CHECK MIL**
   a. Check that the MIL illuminates when turning the ignition switch to ON.

      If the MIL does not illuminate, there is a problem in the MIL circuit. Refer to **MIL Circuit** .

   b. When the engine is started, the MIL should turn off.

DTC CHECK / CLEAR

DTC CHECK / CLEAR

NOTE: **When the diagnosis system is changed from normal mode to check mode or vice versa, all DTCs and freeze frame data recorded in normal mode are cleared. Before changing modes, always check and make a note of DTCs and freeze frame data.**

HINT:

- DTCs which are stored in the TCM can be displayed on the Techstream. The Techstream can display the current, pending and permanent DTCs.
- If a malfunction is detected during the current driving cycle, current and permanent DTCs are stored.

- Some DTCs are not stored if the TCM does not detect the same malfunction again during a second consecutive driving cycle. However, such malfunctions, detected on only one occasion, are stored as pending DTCs.
- Current and pending DTCs can be cleared by using the Techstream or by disconnecting the cable from the negative battery terminal. However, permanent DTCs cannot be cleared using either of these two methods.
- After clearing current DTCs using the Techstream (or by disconnecting the cable from the negative battery terminal), permanent DTCs can be cleared when the system is determined to be normal for the relevant DTCs and then the universal trip is performed.

2 TRIP DETECTION EXAMPLES

Pending DTC	Store condition	Malfunction detected
	Clear condition	System determined to be normal or DTCs cleared using Techstream or Cable disconnected from negative battery terminal
Current DTC	Store condition	Malfunction detected (2nd trip)
	Clear condition	No malfunctions in 40 driving cycles or DTCs cleared using Techstream or Cable disconnected from negative battery terminal
Permanent DTC	Store condition	Malfunction detected (2nd trip)
	Clear condition	Ignition switch turned to ON after no malfunction is detected in 3 consecutive driving cycles or After DTCs cleared using Techstream or cable disconnected from negative battery terminal, malfunction not detected when universal trip driving performed
MIL	ON	Malfunction detected (2nd trip)
	OFF	Ignition switch turned to ON after no malfunction is detected in 3 consecutive driving cycles or DTCs cleared using Techstream or Cable disconnected from negative battery terminal

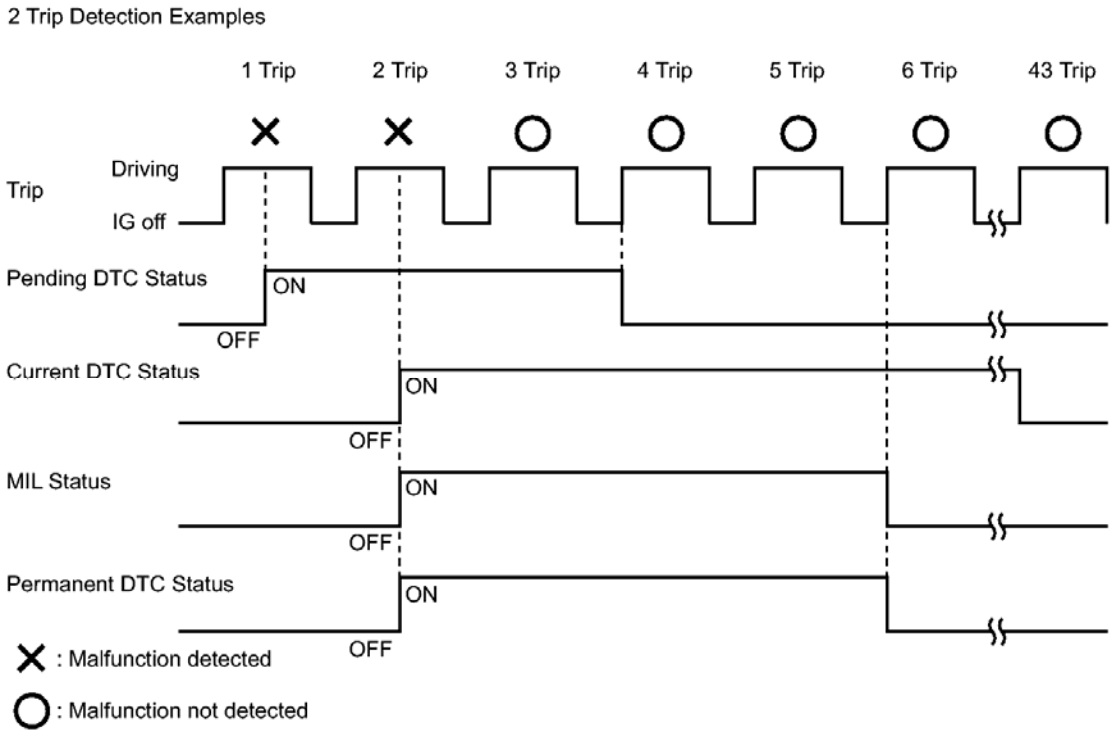

Fig. 17: Trip Detection Examples Blinking Pattern (1 Of 2)
Courtesy of TOYOTA MOTOR SALES, U.S.A., INC.

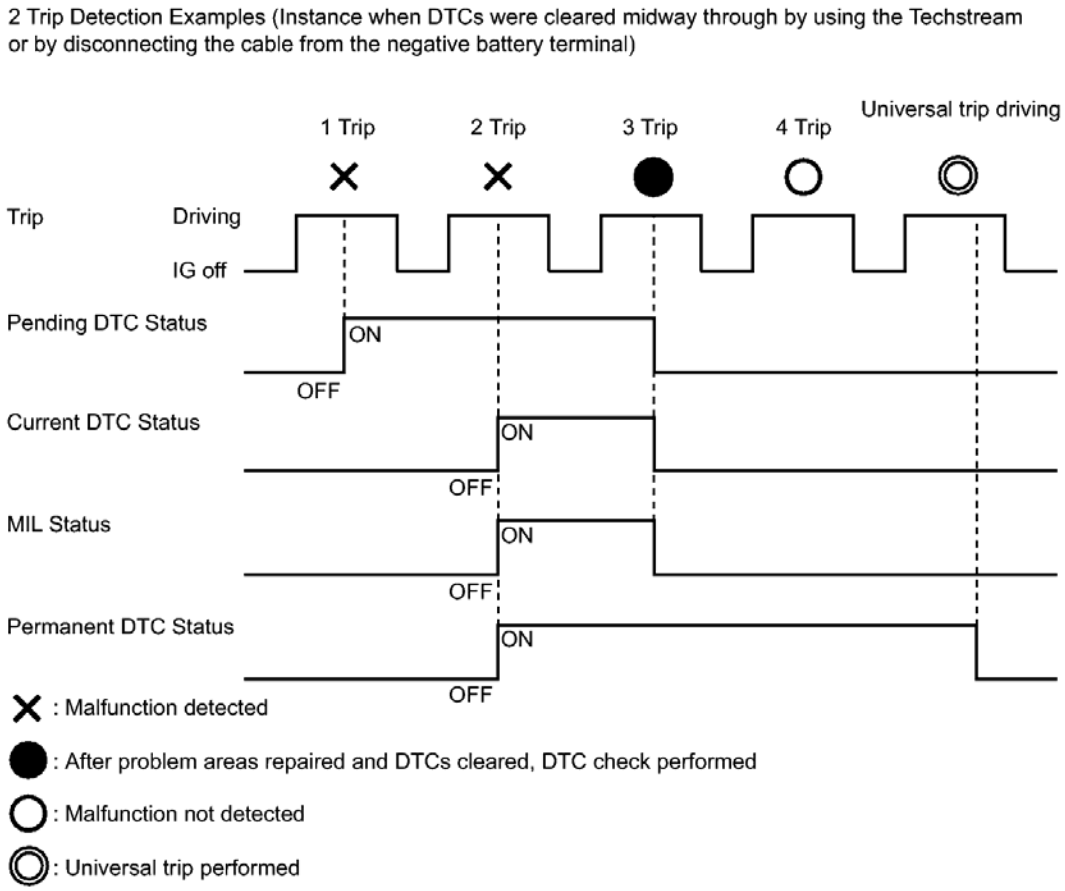

<u>Fig. 18: Trip Detection Examples Blinking Pattern (2 Of 2)</u>
Courtesy of TOYOTA MOTOR SALES, U.S.A., INC.

1. **CHECK DTC**
    a. Connect the Techstream to the DLC3.
    b. Turn the ignition switch to ON.
    c. Turn the Techstream on.
    d. Enter the following menus: Powertrain / ECT / Trouble Codes.
    e. Check the DTC(s) and freeze frame data, and then write them down.
    f. Check the details of the DTC(s). Refer to **<u>DIAGNOSTIC TROUBLE CODE CHART</u>**.
2. **CLEAR DTC (Pending and Current DTC)**
    a. Connect the Techstream to the DLC3.
    b. Turn the ignition switch to ON.
    c. Turn the Techstream on.
    d. Enter the following menus: Powertrain / ECT / Trouble Codes.
    e. Clear the DTCs.
3. **CLEAR PERMANENT DTC**

HINT:

Even if the following procedure is not performed, permanent DTCs are cleared if no malfunction are detected during 3 consecutive driving cycles.

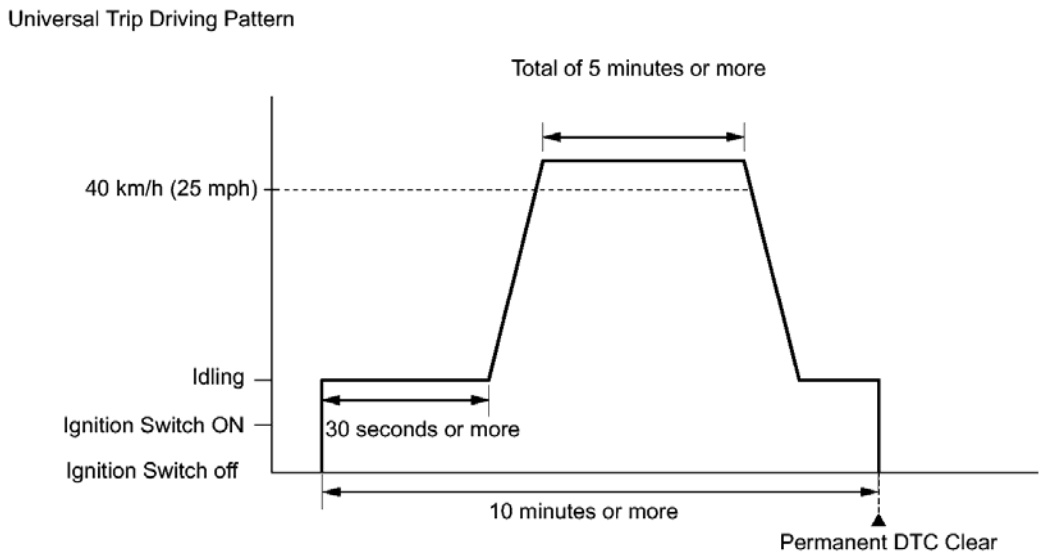

Fig. 19: Identifying Universal Trip Driving Pattern
Courtesy of TOYOTA MOTOR SALES, U.S.A., INC.

a. Connect the Techstream to the DLC3.
b. Turn the ignition switch to ON.
c. Turn the Techstream on.
d. Enter the following menus: Powertrain / Engine and ECT / Trouble Codes.
e. Check if permanent DTCs are stored.

   HINT:

   If permanent DTCs are not output, it is not necessary to continue this procedure.

f. Clear DTCs.
g. Perform the universal trip.
   1. Idle the engine for 30 seconds or more.
   2. Drive the vehicle at 40 km/h (25 mph) or more for a total of 5 minutes or more.

      HINT:

      - It is possible to complete the drive pattern even if the vehicle decelerates to less than 40 km/h (25 mph) during the driving cycle provided that the vehicle is driven at 40 km/h (25 mph) or more for a total of 5 minutes.

- When accelerating through the gears, make sure the vehicle is driven so all gears are used in order and no gears are skipped.

3. Allow 10 minutes or more to elapse from the time the engine is started.

h. Turn the ignition switch off.

i. Wait 15 seconds.

j. Turn the ignition switch to ON.

k. Enter the following menus: Powertrain / ECT / Trouble Codes.

l. Check that the permanent DTCs have been cleared.

HINT:

- If the permanent DTCs have not been cleared, perform the universal trip again.
- The permanent DTCs are cleared when the universal trip is completed.

CHECK MODE PROCEDURE

CHECK MODE PROCEDURE

1. **DESCRIPTION**
   a. Check mode has a higher sensitivity to malfunctions and can detect malfunctions that normal mode cannot detect. Check mode can also detect all the malfunctions that normal mode can detect. In check mode, DTCs are detected with 1 trip detection logic.
2. **CHECK MODE PROCEDURE**
   a. Make sure that the following conditions are met:
      1. Battery positive voltage 11 V or more.
      2. Throttle valve fully closed.
      3. Shift lever in P or N.
      4. A/C off.

   b. Turn the ignition switch off.

   c. Connect the Techstream to the DLC3.

   d. Turn the ignition switch to ON.

   e. Turn the Techstream on.

   f. Enter the following menus: Powertrain / ECT / Check Mode.

   g. Change the TCM to check mode. Make sure the MIL flashes as shown in the illustration.

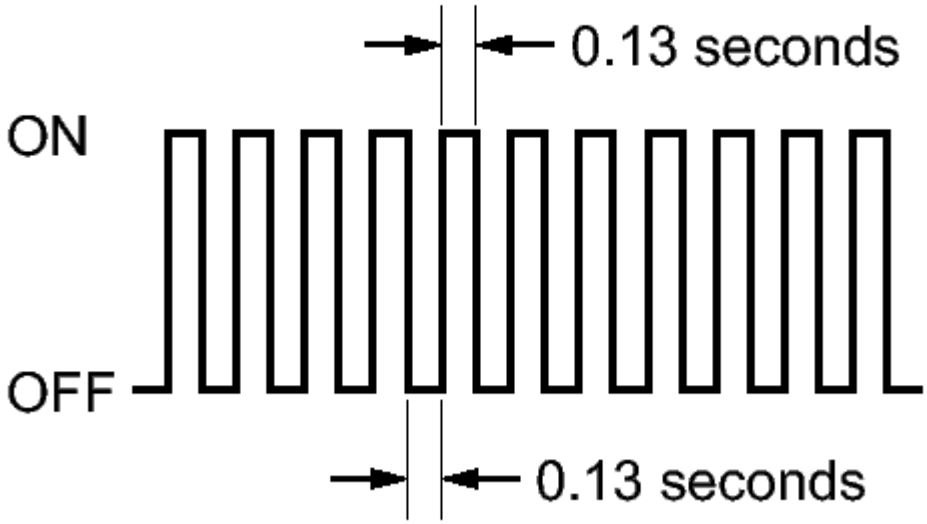

P

Fig. 20: Identifying Blinking Pattern
Courtesy of TOYOTA MOTOR SALES, U.S.A., INC.

NOTE: **All DTCs and freeze frame data will be cleared if: 1) the Techstream is used to change the TCM from normal mode to check mode or vice versa; or 2) during check mode, the ignition switch is turned from ON to ACC or off.**

Before entering check mode, make notes of the DTCs and freeze frame data.

h. Start the engine. The MIL should turn off after the engine starts.
i. Perform Monitor Drive Pattern for the ECT test. Refer to **MONITOR DRIVE PATTERN**.

(Or, simulate the conditions of the malfunction described by the customer.)

j. After simulating the malfunction conditions, use the Techstream to check the DTC and freeze frame data.

FAIL-SAFE CHART

FAIL-SAFE CHART

1. **Fail-safe**

This function minimizes the loss of operation when any abnormality occurs in a sensor or solenoid.

FAIL-SAFE CONTROL LIST

Malfunction Part	Function
Input Speed Sensor (NT)	Shifting to only either 1st or 3rd gears is allowed.
Output Speed Sensor (NC)	• The counter gear speed is determined based on the signals from the skid control ECU (speed sensor signals). • Shifting between 1st to 4th gears is allowed.
ATF Temperature Sensor	Shifting between 1st to 4th gears is allowed.
ECT ECU Power Supply (Voltage is Low)	When the vehicle is being driven in 6th gear, the transaxle is fixed in 6th gear. When being driven in any of 1st to 5th gears, the transaxle is fixed in 5th gear.
CAN communication	Shifting to only either 1st or 3rd gears is allowed.
Knock Sensor	Shifting between 1st to 4th gears is allowed.
	The current to the failed

Solenoid Valve SL1, SL2, SL3 and SL4	solenoid valve is cut off and operating the other solenoid valves with normal operation performs shift control. (Shift controls in fail-safe mode are described in the table below. For details, refer to Fail-Safe Control Chart)

SOLENOID VALVE OPERATION WHEN NORMAL

Gear		1st	2nd	3rd	4th	5th	6th
Solenoid	SL1	ON	ON	ON	ON	OFF	OFF
	SL2	OFF	OFF	OFF	ON	ON	ON
	SL3	OFF	ON	OFF	OFF	OFF	ON
	SL4	OFF	OFF	ON	OFF	ON	OFF

FAIL-SAFE CONTROL CHART

	Gear in Normal Conditions	1st	2nd	3rd	4th	5th	6th
SL1	ON Malfunction (without Fail-safe Control)*1	1st	2nd	3rd	4th	4th	4th
	Fail-safe Control during OFF Malfunction	Fixed in 3rd or 5th					
	Fail-safe Control during OFF Malfunction	Fixed in 3rd or 5th					
	ON Malfunction (without Fail-safe Control)*1	1st to 4th	2nd to 4th	3rd to 4th	4th	5th	6th
	OFF						

SL2	Malfunction (without Fail-safe Control)	1st	2nd	3rd	4th to 1st	5th to N	6th to N
	Fail-safe Control during OFF Malfunction	Fixed in 2nd or 3rd					
SL3	ON Malfunction (without Fail-safe Control)*1	1st to 2nd	2nd	3rd	4th	5th	6th
	OFF Malfunction (without Fail-safe Control)	1st	2nd to 1st	3rd	4th	5th	6th to N
	Fail-safe Control during OFF Malfunction	Fixed in 3rd					
SL4	ON Malfunction (without Fail-safe Control)*1	3rd	3rd	3rd	4th	5th	5th
	OFF Malfunction (without Fail-safe Control)	1st	2nd	3rd to 1st	4th	5th to N	6th
	Fail-safe Control during OFF Malfunction	Fixed in 2nd					

*1: Fail-safe control is not activated when an ON malfunction occurs.

DATA LIST / ACTIVE TEST

DATA LIST / ACTIVE TEST

1. **DATA LIST**

   HINT:

Using the Techstream to read the Data List allows the values or states of switches, sensors, actuators and other items to be read without removing any parts. This non-intrusive inspection can be very useful because intermittent conditions or signals may be discovered before parts or wiring is disturbed. Reading the Data List information early in troubleshooting is one way to save diagnostic time.

NOTE: **In the table below, the values listed under "Normal Condition" are reference values. Do not depend solely on these reference values when deciding whether a part is faulty or not.**

a. Warm up the engine.
b. Turn the ignition switch off.
c. Connect the Techstream to the DLC3.
d. Turn the ignition switch to ON.
e. Turn the Techstream on.
f. Enter the following menus: Powertrain / ECT / Data List / All Data.
g. According to the display on the Techstream, read the Data List.

ECT

Tester Display	Measurement Item/Range	Normal Condition	Diagnostic Note
Vehicle Speed	Vehicle speed / Min.: 0 km/h (0 mph), Max.: 255 km/h (158 mph)	Actual vehicle speed	-
Engine Speed	Engine speed / Min.: 0 RPM, Max.: 16383.75 RPM	550 to 800 RPM: Idling	-
Calculate Load	Calculated load by ECM / Min.: 0%, Max.: 100%	• 15.0 to 35.0%: Idling • 10.0 to 30.0%: Running without load (2000 RPM)	-
Coolant Temp	Engine coolant temperature / Min.: -40°C (-40°F), Max.:	80 to 105°C (176 to 221°F): After warming up	• If value -40°C (-40°F): sensor circuit open • If value 140°C

	140°C (284°F)		(284° F): sensor circuit shorted
Engine Run Time	Engine run time / Min.: 0 s (seconds), Max.: 65535 s (seconds)	Time after engine start	-
Battery Voltage	Battery voltage / Min.: 0, Max.: 65.535 V	11 to 14 V: Idling	-
Throttle Sensor Volt %	Throttle position sensor output/ Min.: 0%, Max.: 100%	10 to 22%: Idling	Calculated value based on VTA1
Starter Signal	Starter signal/ Open or Close	-	-
Neutral Position SW Signal	Park/neutral position switch status/ ON or OFF	• ON: Shift lever is in P or N • OFF: Shift lever is not in P or N	When the shift lever position displayed on the Techstream differs from the actual position, adjustment of the park/neutral position switch or the shift cable may be incorrect. **HINT:** When the failure still occurs even after adjusting these parts. Refer to **DTC P0705:**

			Transmission Range Sensor Circuit Malfunction (PRNDL Input) .
Stop Light Switch	Stop light switch status/ ON or OFF	Brake pedal is • ON: Depressed • OFF: Released	-
Check Mode	Check mode / ON or OFF	ON: Check mode ON	-
SPD Test Result	Check mode result for vehicle speed sensor / Compl or Incmpl	-	-
Complete Parts Monitor	Comprehensive component monitor / Not Avl or Avail	-	-
Fuel System Monitor	Fuel system monitor / Not Avl or Avail	-	-
Misfire Monitor	Misfire monitor / Not Avl or Avail	-	-
EGR/VVT Monitor	EGR/VVT monitor / Not Avl or Avail	-	-
EGR/VVT Monitor	EGR/VVT monitor / Compl or Incmpl	-	-
O2S(A/FS) Heater	Heated oxygen sensor (air fuel ratio sensor) heater	-	-

Monitor	monitor / Not Avl or Avail		
O2S(A/FS) Heater Monitor	Heated oxygen sensor (air fuel ratio sensor) heater monitor / Compl or Incmpl	-	-
O2S(A/FS) Monitor	Heated oxygen sensor (air fuel ratio sensor) monitor / Not Avl or Avail	-	-
O2S(A/FS) Monitor	Heated oxygen sensor (air fuel ratio sensor) monitor / Compl or Incmpl	-	-
A/C Monitor	A/C monitor / Not Avl or Avail	-	-
A/C Monitor	A/C monitor / Compl or Incmpl	-	-
2nd Air Monitor	2nd air monitor / Not Avl or Avail	-	-
2nd Air Monitor	2nd air monitor / Compl or Incmpl	-	-
EVAP Monitor	EVAP monitor / Not Avl or Avail	-	-
EVAP Monitor	EVAP monitor / Compl or Incmpl	-	-
Heated Catalyst	Heated catalyst monitor /	-	-

Monitor	Not Avl or Avail		
Heated Catalyst Monitor	Heated catalyst monitor / Compl or Incmpl	-	-
Catalyst Monitor	Catalyst monitor / Not Avl or Avail	-	-
Catalyst Monitor	Catalyst monitor / Compl or Incmpl	-	-
Component Monitor ENA	Comprehensive component monitor / Unable or Enable	-	-
Component Monitor CMPL	Comprehensive component monitor / Compl or Incmpl	-	-
Fuel System Monitor ENA	Comprehensive component monitor / Unable or Enable	-	-
Fuel System Monitor CMPL	Comprehensive component monitor / Compl or Incmpl	-	-
Misfire Monitor ENA	Misfire monitor / Unable or Enable	-	-
Misfire Monitor CMPL	Misfire monitor / Compl or Incmpl	-	-
EGR/VVT Monitor ENA	EGR/VVT monitor / Unable or Enable	-	-

EGR/VVT Monitor CMPL	EGR/VVT monitor / Compl or Incmpl	-	-
Heater Monitor ENA	Heated oxygen sensor (air fuel ratio sensor) heater monitor / Unable or Enable	-	-
Heater Monitor CMPL	Heated oxygen sensor (air fuel ratio sensor) heater monitor / Compl or Incmpl	-	-
O2S(A/FS) Monitor ENA	Heated oxygen sensor (air fuel ratio sensor) monitor / Unable or Enable	-	-
O2S(A/FS) Monitor CMPL	Heated oxygen sensor (air fuel ratio sensor) monitor / Compl or Incmpl	-	-
A/C Monitor ENA	A/C monitor / Unable or Enable	-	-
A/C Monitor CMPL	A/C monitor / Compl or Incmpl	-	-
2nd Air Monitor ENA	2nd air monitor / Unable or Enable	-	-
2nd Air Monitor CMPL	2nd air monitor / Compl or Incmpl	-	-
EVAP Monitor	EVAP monitor /	-	-

ENA	Unable or Enable		
EVAP Monitor CMPL	EVAP monitor / Compl or Incmpl	-	-
Heated Cat Monitor ENA	Heated catalyst monitor / Unable or Enable	-	-
Heated Cat Monitor CMPL	Heated catalyst monitor / Compl or Incmpl	-	-
Catalyst Monitor ENA	Catalyst monitor / Unable or Enable	-	-
Catalyst Monitor CMPL	Catalyst monitor / Compl or Incmpl	-	-
TC Terminal	TC terminal Status / ON or OFF	-	-
#Codes (Include History)	# of Codes / Min.: 0, Max.: 255	-	Number of detected DTCs
MIL	MIL status / ON or OFF	ON: MIL ON	-
MIL ON Run Distance	MIL ON run distance / Min.: 0 km (0 mile), Max.: 65535 km (40723 mile)	Distance after DTC detected	-
Running Time from MIL ON	Running time from MIL ON / Min.: 0 min (minute), Max.: 65535 (minutes)	Equivalent to running time after MIL ON	-
Time after	Time after DTC cleared / Min.: 0 min	Equivalent to time	-

DTC Cleared	(minute), Max.: 65535 nin (minutes)	after DTCs cleared	
Distance from DTC Cleared	Distance after DTC cleared / Min.: 0 km (0 mile) Max.: 65535 km (40723 mile)	Equivalent to time after DTCs cleared	-
Warmup Cycle Cleared DTC	Warm-up cycle after DTC cleared / Min.: 0, Max.: 255	-	Number of warm-up cycles after DTCs cleared
OBD Requirements	OBD Requirements /	-	-
Number of Emission DTC	Emission related DTCs / Min.: 0, Max.: 127	-	-
TC and TE1	TC and TE1 terminals of DLC3 / ON or OFF	-	Active Test support data
Model Code	Model code /	-	-
Transmission (Engine) Type	Transmission type /	-	-
Cylinder Number	Cylinder number /	-	-
Transmission Type	Transmission type /	-	-
Destination	Destination /	-	-
Model Year	Model year / Min.: 1900, Max.: 2155	-	-
System Identification	System identification /	-	-
Engine Speed from EFI	Engine speed / Min.: 0 RPM, Max.: 16383.75 RPM	550 to 800 RPM: Idling	-
			• If value -40°C(-

Intake-Air Temp from EFI	Intake air temperature / Min.: -40°C (-40°F), Max.: 215°C (419°F)	Equivalent to ambient air temperature	40°F): sensor circuit open • If value 215°C (419°F): sensor circuit shorted
Coolant Temp from EFI	Engine coolant temperature / Min.: -40°C (-40°F), Max.: 215°C (419°F)	80 to 105°C (176 to 221°F): After warming up	• If value -40°C (-40°F): sensor circuit open • If value 140°C (284°F): sensor circuit shorted
Throttle Position from EFI	Throttle sensor position / Min.: 0%, Max.: 100%	• 0%: Accelerator pedal released • 50 to 80%: Accelerator pedal fully depressed	Recognition value for throttle opening angle on ECM
Accel Position from EFI	Absolute Accelerator Pedal Position / Min.: 0%, Max.: 100%	• 0%: Accelerator pedal released • 54 to 86%: Accelerator pedal fully depressed	-
		Lock-up is • ON (After warming up the engine): Input turbine	

SPD (NT)	Input turbine speed/ Min.: 0 RPM, Max.: 12750 RPM	speed (NT) is equal to engine speed • OFF (idling with shift lever in N): Input turbine speed (NT) is nearly equal to engine speed	-
SPD (NC)	Counter gear speed / Min.: 0 RPM, Max.: 12750 RPM	-	-
Shift SW Status (P Range)	Park/neutral position switch status/ ON or OFF	• ON: Shift lever is in P • OFF: Shift lever is not in P	When the shift lever position displayed on the Techstream differs from the actual position, adjustment of the park/neutral position switch or the shift cable may be incorrect. **HINT:** When the failure still occurs even after adjusting these parts. Refer to **DTC P0705: Transmission Range Sensor Circuit**

			Malfunction (PRNDL Input)
Shift SW Status (R Range)	Park/neutral position switch status/ ON or OFF	• ON: Shift lever is in R • OFF: Shift lever is not in R	When the shift lever position displayed on the Techstream differs from the actual position, adjustment of the park/neutral position switch or the shift cable may be incorrect. **HINT:** When the failure still occurs even after adjusting these parts. Refer to **DTC P0705: Transmission Range Sensor Circuit Malfunction (PRNDL Input)**
			When the shift lever position displayed on the Techstream differs from the actual position, adjustment of the park/neutral position

Shift SW Status (N Range)	Park/neutral position switch status/ ON or OFF	• ON: Shift lever is in N • OFF: Shift lever is not in N	switch or the shift cable may be incorrect. **HINT:** When the failure still occurs even after adjusting these parts. Refer to **DTC P0705: Transmission Range Sensor Circuit Malfunction (PRNDL Input)**
Sports Shift Up SW	Sport shift up switch status/ ON or OFF	• ON: Continuously shift to "+" (up-shift) • OFF: Release "+" (up-shift)	-
Sports Shift Down SW	Sport shift down switch status/ ON or OFF	• ON: Continuously shift to "-" (down-shift) • OFF: Release "-" (down-shift)	-
Sports Mode Selection SW	Sport mode select switch status/ ON or OFF	Shift lever is: • ON: S, "+" or "-" • OFF: Not in S, "+" or "-"	-
			When the shift lever position displayed on the Techstream differs from the actual

Shift SW Status (D Range)	Park/neutral position switch status/ ON or OFF	• ON: Shift lever is in D or S • OFF: Shift lever is not in D or S	position, adjustment of the park/neutral position switch or the shift cable may be incorrect. **HINT:** When the failure still occurs even after adjusting these parts. Refer to **DTC P0705: Transmission Range Sensor Circuit Malfunction (PRNDL Input)**
A/T Oil Temperature 1	ATF temperature sensor value/ min.: -40°C (-40°F) max.: 215°C (419°F)	• After stall test; approximately 80°C (176°F) • Equal to ambient temperature when cold soak	If the value is "-40°C (-40°F)" or "215°C (419°F)", ATF temperature sensor circuit is open or shorted.
NT Sensor Voltage	Input speed sensor (NT) output voltage / Min.: 0 V, Max.: 5 V	0.1 to 1.9 V	-
NC Sensor Voltage	Output speed sensor (NC) output voltage / Min.: 0 V, Max.: 5 V	0.1 to 1.9 V	-
		• ON: Shift solenoid	

TPS 3 Switch	No. 3 ATF pressure switch status/ 0: OFF / 1: ON	valve SLU is ON • OFF: Shift solenoid valve SLU is OFF	-
Lock Up	Lock up / 0: OFF / 1: ON	Lock up: ON	-
Shift Status	TCM gear shift command/ 1st, 2nd, 3rd, 4th, 5th or 6th	Same as actual gear	-
SLT Solenoid Status	Shift solenoid SLT status/ ON or OFF	• Accelerator pedal is depressed: OFF • Accelerator pedal is released: ON	-
SLU Solenoid Status	Shift Solenoid SLU Status/ ON or OFF	• ON: Lock up • OFF: Except lock up	-
SL Solenoid Status	Shift Solenoid SL Status/ ON or OFF	• ON: Lock up • OFF: Except lock up	-
AT Fluid	Flex lockup judder judgment flag / 0: OFF / 1: ON	-	-

2. **ACTIVE TEST**

HINT:

Using the Techstream to perform Active Tests allows relays, VSVs, actuators and other items to be operated without removing any parts. This non-intrusive functional inspection can be very useful because intermittent operation may be discovered before parts or wiring is disturbed. Performing Active Tests early in troubleshooting is one way to save diagnostic time. Data List information can be displayed while performing Active Tests.

a. Warm up the engine.
b. Turn the ignition switch off.
c. Connect the Techstream to the DLC3.
d. Turn the ignition switch to ON.

e. Turn the Techstream on.
f. Enter the following menus: Powertrain / ECT / Active Test.
g. According to the display on the Techstream, perform the Active Test.

ECT

Tester Display	Test Part	Control Range	Diagnostic Note
Connect the TC and TE1	Connects and disconnects TC and TE1. (transitions into the fluid temperature detection mode)	ON/OFF	The MIL will not blink when "Connect the TC and TE1 / ON" is selected.
Activate the Solenoid (SLU)	Operates shift solenoid SLU	ON/OFF	[Vehicle Condition] • Engine stopped • Shift lever in P or N
Activate the Solenoid (SLT)*	Operates shift solenoid SLT to raise the line pressure.	ON/OFF **HINT:** ON: No action (normal operation) OFF: Line pressure up (When the Active Test of "Activate the Solenoid (SLT)" is performed, the TCM commands the SLT solenoid to turn off).	[Vehicle Condition] • Vehicle Stopped • IDL: ON
	Controls		Can be used to check SLU and SL solenoid

Activate the Lock Up	the shift solenoid SLU and SL to set the automatic transaxle to the lock-up condition.	ON/OFF	operation. [Vehicle Condition] Vehicle speed: 60 km/h (37 mph) or more
Activate the Solenoid (SL)	Operates shift solenoid SL	ON/OFF	[Vehicle Condition] • Engine stopped • Shift lever in P or N
Control the Shift Position	Operates the shift solenoid valves to allow gears to be selected manually.	• Press "-->" button: Upshift occurs • Press "<--" button: Downshift occurs	Can be used to check the operation of the shift solenoid valves. Upshifts and downshifts should be performed consecutively. A 10-second interval is required between gear changes. Do not downshift at high speeds. Doing so will damage the automatic transaxle. [Vehicle Condition] 50 km/h

			(30 mph) or less
Activate the Solenoid (SL1)	Operates shift solenoid SL1	ON/OFF	[Vehicle Condition] • Engine stopped • Shift lever in P or N
Activate the Solenoid (SL2)	Operates shift solenoid SL2	ON/OFF	[Vehicle Condition] • Engine stopped • Shift lever in P or N
Activate the Solenoid (SL3)	Operates shift solenoid SL3	ON/OFF	[Vehicle Condition] • Engine stopped • Shift lever in P or N
Activate the Solenoid (SL4)	Operates shift solenoid SL4	ON/OFF	[Vehicle Condition] • Engine stopped • Shift lever in P or N

*: The "Activate the solenoid (SLT)" Active Test is performed to allow confirmation that the line pressure changes. The line pressure changes are confirmed using the same SST that is used for the Hydraulic Test. Refer to **HYDRAULIC TEST**.

HINT:

Note that the pressure readings for the Active Test and Hydraulic Test are different.

DIAGNOSTIC TROUBLE CODE CHART

DIAGNOSTIC TROUBLE CODE CHART

HINT:

- If a DTC is displayed during the DTC check, check the parts listed in the table below and proceed to the appropriate information given.
- If multiple suspected areas are listed, the potential causes of the symptoms are listed in order of probability in the "Trouble Area" column of the table.
- *1: "Comes on" means the Malfunction Indicator Lamp (MIL) illuminates.
- *2: "DTC stored" means the TCM memorizes the trouble code if the TCM detects the DTC detection condition.
- These DTCs may be output when clutches, brakes, gear components, etc., inside the automatic transaxle are damaged.

U660F AUTOMATIC TRANSAXLE SYSTEM

DTC Code	Detection Item	MIL*1	Memory*2	See
P0500	Vehicle Speed Sensor "A"	Comes on	DTC stored	Refer to **DTC P0500: Vehicle Speed Sensor "A"**
P0560	System Voltage	Comes on	DTC stored	Refer to **DTC P0560: System Voltage**
P0617	Starter Relay Circuit High	Comes on	DTC stored	Refer to **DTC P0617: Starter Relay Circuit High**
P062F	Internal Control Module EEPROM Error	Comes on	DTC stored	Refer to **DTC P062F: Internal Control Module EEPROM Error**
P0705	Transmission Range Sensor Circuit Malfunction (PRNDL Input)	Comes on	DTC stored	Refer to **DTC P0705: Transmission Range Sensor Circuit Malfunction (PRNDL Input)**
P0711	Transmission Fluid Temperature Sensor "A" Performance	Comes on	DTC stored	Refer to **DTC P0711: Transmission Fluid Temperature Sensor "A" Performance**
P0712	Transmission Fluid Temperature Sensor "A" Circuit Low Input	Comes on	DTC stored	Refer to **DTC P0712: Transmission Fluid Temperature Sensor "A" Circuit Low Input; DTC P0713: Transmission Fluid Temperature Sensor "A" Circuit High Input**
P0713	Transmission Fluid Temperature	Comes	DTC	Refer to **DTC P0712: Transmission Fluid Temperature Sensor "A" Circuit Low Input; DTC P0713:**

	Sensor "A" Circuit High Input	on	stored	**Transmission Fluid Temperature Sensor "A" Circuit High Input**
P0715	Input / Turbine Speed Sensor Circuit Malfunction	Comes on	DTC stored	Refer to **DTC P0715: Input / Turbine Speed Sensor Circuit Malfunction; DTC P0717: Input Speed Sensor Circuit No Signal**
P0717	Input Speed Sensor Circuit No Signal	Comes on	DTC stored	Refer to **DTC P0715: Input / Turbine Speed Sensor Circuit Malfunction; DTC P0717: Input Speed Sensor Circuit No Signal**
P0724	Brake Switch "B" Circuit High	Comes on	DTC stored	Refer to **DTC P0724: Brake Switch "B" Circuit High**
P0741	Torque Converter Clutch Solenoid Performance (Shift Solenoid Valve SL)	Comes on	DTC stored	Refer to **DTC P0741: Torque Converter Clutch Solenoid Performance (Shift Solenoid Valve SL)**
P0746	Pressure Control Solenoid "A" Performance (Shift Solenoid Valve SL1)	Comes on	DTC stored	Refer to **DTC P0746: Pressure Control Solenoid "A" Performance (Shift Solenoid Valve SL1)**
P0748	Pressure Control Solenoid "A" Electrical (Shift Solenoid Valve SL1)	Comes on	DTC stored	Refer to **DTC P0748: Pressure Control Solenoid "A" Electrical (Shift Solenoid Valve SL1)**
P0776	Pressure Control Solenoid "B" Performance (Shift Solenoid Valve SL2)	Comes on	DTC stored	Refer to **DTC P0776: Pressure Control Solenoid "B" Performance (Shift Solenoid Valve SL2)**
P0778	Pressure Control Solenoid "B" Electrical (Shift Solenoid Valve SL2)	Comes on	DTC stored	Refer to **DTC P0778: Pressure Control Solenoid "B" Electrical (Shift Solenoid Valve SL2)**
P0791	Intermediate Shaft Speed	Comes	DTC	Refer to **DTC P0791: Intermediate Shaft Speed Sensor "A" Circuit; DTC P0793: Intermediate Shaft Speed**

	Sensor "A" Circuit	on	stored	**Sensor "A"**
P0793	Intermediate Shaft Speed Sensor "A"	Comes on	DTC stored	Refer to **DTC P0791: Intermediate Shaft Speed Sensor "A" Circuit; DTC P0793: Intermediate Shaft Speed Sensor "A"**
P0796	Pressure Control Solenoid "C" Performance (Shift Solenoid Valve SL3)	Comes on	DTC stored	Refer to **DTC P0796: Pressure Control Solenoid "C" Performance (Shift Solenoid Valve SL3)**
P0798	Pressure Control Solenoid "C" Electrical (Shift Solenoid Valve SL3)	Comes on	DTC stored	Refer to **DTC P0798: Pressure Control Solenoid "C" Electrical (Shift Solenoid Valve SL3)**
P0989	Transmission Fluid Pressure Sensor / Switch "E" Circuit Low	Comes on	DTC stored	Refer to **DTC P0989: Transmission Fluid Pressure Sensor / Switch "E" Circuit Low; DTC P0990: Transmission Fluid Pressure Sensor / Switch "E" Circuit High**
P0990	Transmission Fluid Pressure Sensor / Switch "E" Circuit High	Comes on	DTC stored	Refer to **DTC P0989: Transmission Fluid Pressure Sensor / Switch "E" Circuit Low; DTC P0990: Transmission Fluid Pressure Sensor / Switch "E" Circuit High**
P2714	Pressure Control Solenoid "D" Performance (Shift Solenoid Valve SLT)	Comes on	DTC stored	Refer to **DTC P2714: Pressure Control Solenoid "D" Performance (Shift Solenoid Valve SLT)**
P2716	Pressure Control Solenoid "D" Electrical (Shift Solenoid Valve SLT)	Comes on	DTC stored	Refer to **DTC P2716: Pressure Control Solenoid "D" Electrical (Shift Solenoid Valve SLT)**
P2757	Torque Converter Clutch Pressure Control Solenoid Performance (Shift Solenoid Valve SLU)	Comes on	DTC stored	Refer to **DTC P2757: Torque Converter Clutch Pressure Control Solenoid Performance (Shift Solenoid Valve SLU)**

P2759	Torque Converter Clutch Pressure Control Solenoid Control Circuit Electrical (Shift Solenoid Valve SLU)	Comes on	DTC stored	Refer to **DTC P2759: Torque Converter Clutch Pressure Control Solenoid Control Circuit Electrical (Shift Solenoid Valve SLU)**
P2769	Short in Torque Converter Clutch Solenoid Circuit (Shift Solenoid Valve SL)	Comes on	DTC stored	Refer to **DTC P2769: Short in Torque Converter Clutch Solenoid Circuit (Shift Solenoid Valve SL); DTC P2770: Open in Torque Converter Clutch Solenoid Circuit (Shift Solenoid Valve SL)**
P2770	Open in Torque Converter Clutch Solenoid Circuit (Shift Solenoid Valve SL)	Comes on	DTC stored	Refer to **DTC P2769: Short in Torque Converter Clutch Solenoid Circuit (Shift Solenoid Valve SL); DTC P2770: Open in Torque Converter Clutch Solenoid Circuit (Shift Solenoid Valve SL)**
P2808	Pressure Control Solenoid "G" Performance (Shift Solenoid Valve SL4)	Comes on	DTC stored	Refer to **DTC P2808: Pressure Control Solenoid "G" Performance (Shift Solenoid Valve SL4)**
P2810	Pressure Control Solenoid "G" Electrical (Shift Solenoid Valve SL4)	Comes on	DTC stored	Refer to **DTC P2810: Pressure Control Solenoid "G" Electrical (Shift Solenoid Valve SL4)**
U0100	Lost Communication with ECM / PCM "A"	Comes on	DTC stored	Refer to **DTC U0100: Lost Communication with ECM / PCM "A"**