Table of Contents

INTELLIGENT SAFETY INTEGRATION SYSTEM (ISIS)

Subject **Page**

Purpose of the System. 3

System Overview. 5

Components. 7
- Safety Information Module (SIM). 8
- *byteflight*. 17
- A-Pillar Satellites (SASL/SASR). 17
- B-Pillar Satellite, Left (SBSL). 20
- B-Pillar Satellite, Right (SBSR). 21
- Seat Satellites (SSFA/SSBF). 24
- Seat Satellite, Rear (SSH). 25
- Front Door Satellites (STVL/STVR). 27
- Vehicle Satellite Center (SFZ). 29
- Steering Column Switch Center (SZL). 30
- Central Gateway Module (ZGM). 31
- Driver Airbag. 32
- Passenger Airbag. 32
- Knee Airbags. 33
- Advanced Head Protection System (AHPS). 34
- Side Airbags. 37
- Front Seatbelt Tensioners. 38
- Front belt Tension Limiters. 39
- Rear Seatbelt Tensioners. 41
- Seat Occupancy Detection. 43
- Seatbelt Buckle Switch. 43
- Active Head Restraint System (AKS). 44
- Battery Safety Terminal. 47

Principle of Operation
- Triggering Strategy. 48
- ISIS Emergency Call Function. 52
- Airbag Warning Lights and Check Control. 55

Workshop Hints. 58

Review Questions. 59

cardiagn.com

INTELLIGENT SAFETY INTEGRATION SYSTEM (ISIS)

Model: E65 - 745i

Production Date: 11/2001 - Start of Production

Objectives

After completing this module you should be able to:

- Understand the reason why the ISIS uses a network of satellites instead of controlling all functions by one central control module.
- Describe the various modules and safety systems used in the E65.
- Understand the reason for the various self-diagnosis functions of the SIM and satellites.
- Understand the triggering strategy of the ISIS.

cardiagn.com

Purpose of the System

With the launch of the E65, a completely new passive safety system, the ISIS (Intelligent Safety Integration System), is introduced.

The MRS system (Multiple Restraint System) used so far consists of a central control unit with piezo-electric acceleration sensors and the two external satellites for side crash detection. The centralization and the associated sequential processing of different signals via conventional wiring harnesses led to high loads on the computer unit, time losses and greater susceptibility to malfunction.

Due to the limited performance of the microprocessor an expansion of the system to include other necessary sensors and trigger circuits for pyrotechnical actuators is not possible with the existing MRS.

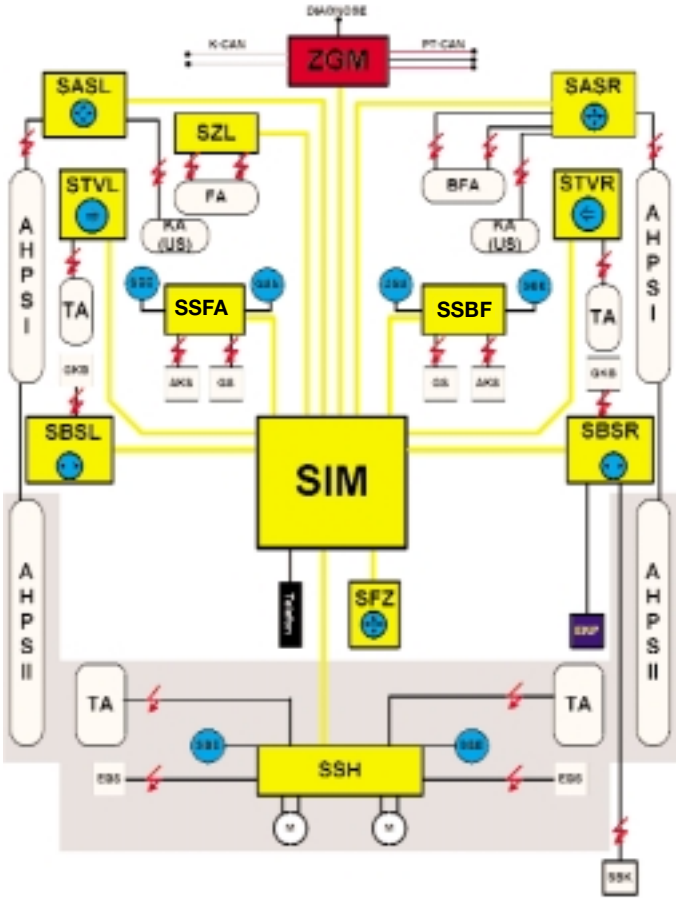

kt-8135

The ISIS system consists of the Safety Information Module SIM and several control units, called satellites, that are linked across the *byteflight* bus. In the case of the MRS system there was only one central control unit. On the E65, the acceleration sensors are integrated into the satellites.

cardiagn.com

The actuators are directly connected to the satellites and are activated by the satellites. The satellites are fitted at strategic points in the car. The distributed sensor system in the car enables measurement of the accelerations occurring as close as possible to the outer shell of the body and at the location of the collision.

The direct recording and processing of the information in the control unit mean that significantly shorter reaction times can be achieved. The mechanical time lag within the body to a central control unit is eliminated.

The distributed sensors in the satellites provide redundant information that is interchanged via the *byteflight*. This leads to even more reliable trigger decisions. In comparison to the MRS systems used to date, the ISIS enables, (for example in the event of a side-on collision) earlier triggering.

Because of the use of *byteflight*, the ISIS system has the following advantages:

- High communication speed
- Highest level of system security
- Faster trigger decisions
- Redundant information provided by the sensor
- Software update via bus
- Self-diagnostic procedure
- Mechanical safety switch is unnecessary
- No electromagnetic disturbances due to fiber-optic communication
- No electrical connection between transmitter and receiver module
- Simple system upgrade

cardiagn.com

Components

The ISIS is made up of the following components:

- SIM (System Master)
- *byteflight*
- A-Pillar Satellites, Left and Right
- B-Pillar Satellites, Left and Right
- Seat Satellites, Driver and Passenger
- Seat Satellite, Rear
- Door Satellite, Driver and Passenger
- Vehicle Center Satellite
- Steering Column Switch Center
- Central Gateway Module
- Driver and Passenger Front “Smart” Airbags
- Driver and Passenger Knee Airbags
- Advanced HPS I (HPS II with rear airbag option)
- Side Airbags, Driver and Passenger (Rear side airbags optional)
- Seat Belt Tensioners with Buckle Switch, Driver and Passenger
- Seat Belt Tension Limiters, Driver and Passenger
- Seat Belt End Fitting Tensioners, Left and right rear passengers
- Seat Occupancy Sensors, Driver and Passenger (4 seating positions with rear airbag option)
- Active Head Restraint (with Comfort Seat option)
- Safety Battery Terminal

cardiagn.com

System Overview

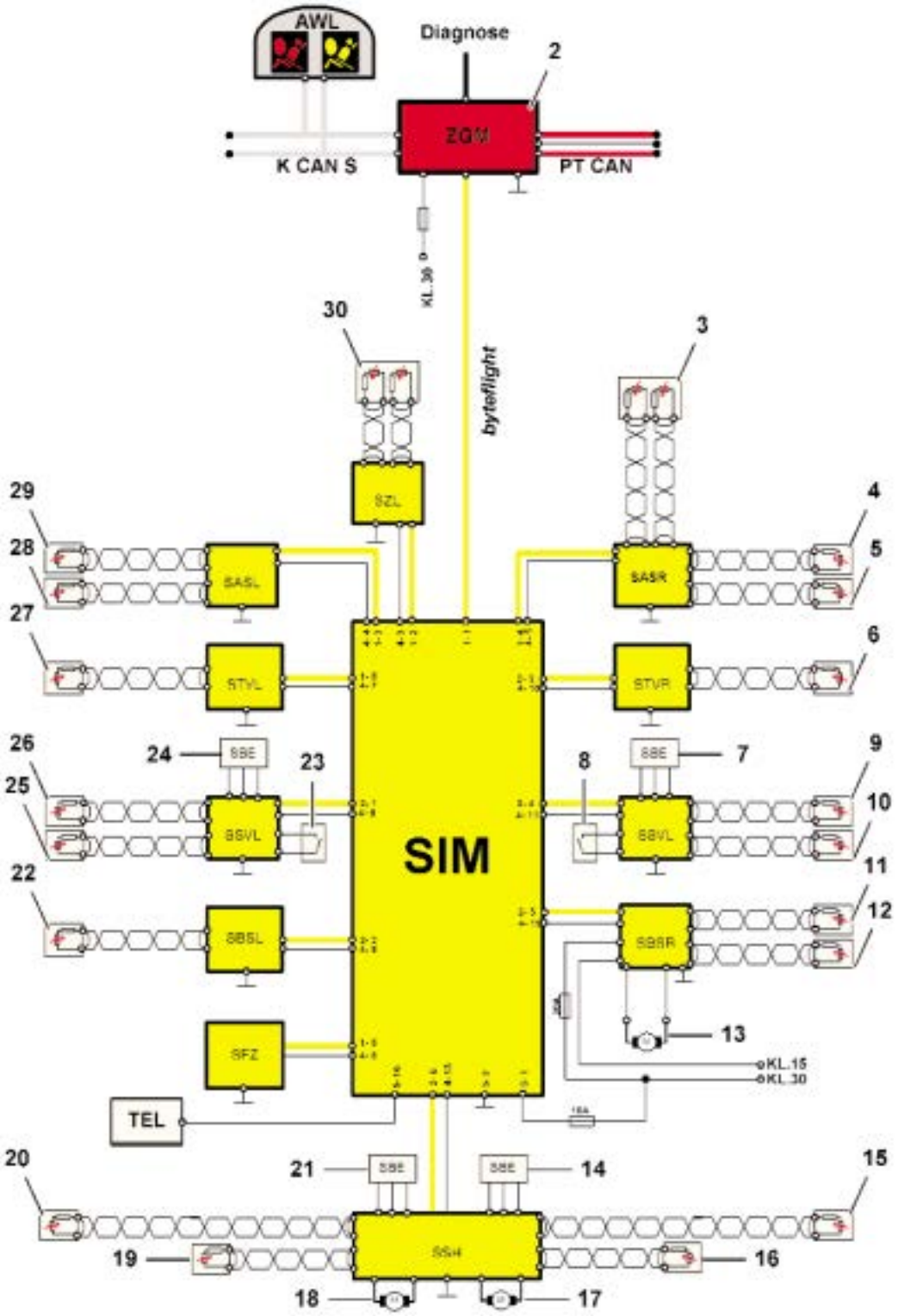

cardiagn.com

Legend for System Overview

1	KOMBI with warning lights	**17**	Head Restraint Adjustment Motor, Right
2	Central Gateway Module	**18**	Head Restraint Adjustment Motor, Left
SASR	Satellite A-pillar, Right with Acceleration Sensor	**19**	Ignition Stage for Belt Tensioner, Left Rear
3	Ignition Stage 1 and 2 for Passenger Airbag	**20**	Ignition Stage for Side Airbag, Left Rear
4	Ignition Stage for Advanced HPS I/II	**21**	Seat Occupancy Sensor, Left Rear
5	Ignition Stage for Passenger Knee Airbag	**SFZ**	Satellite Vehicle Center with Acceleration Sensor
STVR	Satellite, Right Front Door with Pressure Sensor	**SBSL**	Satellite, B-Pillar Left with Acceleration Sensor
6	Ignition Stage for Side Airbag, Right Front	**22**	Ignition Stage for Belt Tension Limiter, Left
SSBF	Seat Satellite, Passenger Seat	**SSFA**	Seat Satellite, Drivers Seat
7	Seat Occupancy Sensor for Passenger Seat	**23**	Buckle Switch, Drivers Seat
8	Buckle Switch, Passenger Seat	**24**	Seat Occupancy Sensor for Drivers Seat
9	Ignition Stage for Seatbelt Tensioner, Passenger Seat	**25**	Ignition Stage for Active Head Restraint, Drivers Seat
10	Ignition Stage for Active Head Restraint, Passenger Seat	**26**	Ignition Stage for Seatbelt Tensioner, Drivers Seat
SBSR	Satellite, B-Pillar Right Side with Acceleration Sensor	**STVL**	Satellite, LEFT front Door with Pressure Sensor
11	Ignition Stage for Belt Tension Limiter, Right	**27**	Ignition Stage for Side Airbag, Left Front
12	Ignition Stage for BST	**SASL**	Satellite A-Pillar, Left with Acceleration Sensor
13	Fuel Pump	**28**	Ignition Stage for Knee Airbag, left Front
SSH	Satellite, Rear Seat	**29**	Ignition Stage for Advanced HPS I/II
14	Seat Occupancy Sensor, Right Rear	**SZL**	Satellite, Switch Center, Steering Column
15	Ignition Stage for Side Airbag, Right Rear	**30**	Ignition Stage 1 and 2 for Driver airbag
16	Ignition Stage for Belt Tensioner, Right Rear	**TEL**	Telephone

cardiagn.com

Safety Information Module (SIM)

In the network of satellites, the Safety Information Module SIM is the central unit. The SIM has the following functions:

- Supply operating power to the satellites and provide an energy reserve in the event of failure of the voltage supply during an accident.
- The SIM is the connection master (using the Intelligent Star Coupler) and system master of the *byteflight* fiber-optic network.
- Triggering an automatic emergency call in the event of a collision.

The SIM is located behind the glovebox.

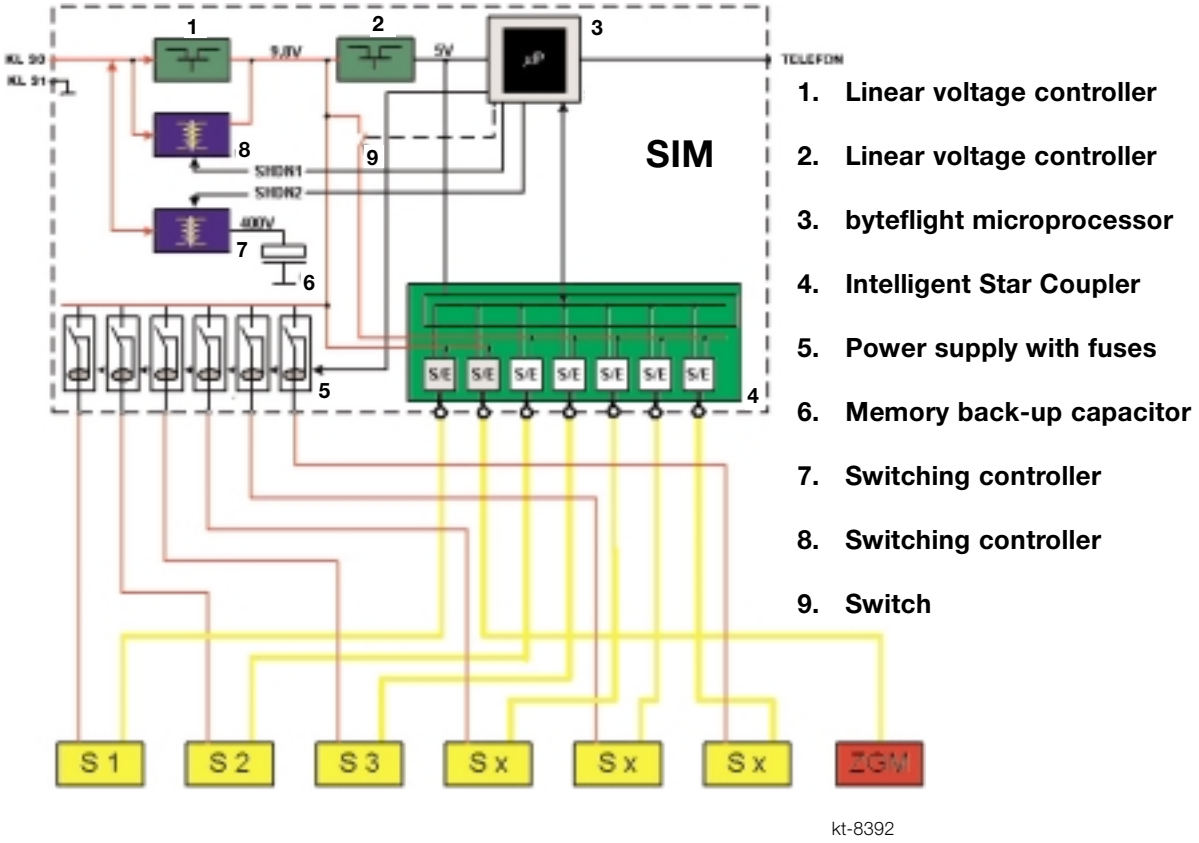

Circuitry overview of the SIM

cardiagn.com

Power Supply of the SIM During Operation

The SIM is supplied with voltage KL terminals 30 and ground from KL31. If the vehicle voltage is sufficient then a switching controller (8) is supplied first, which supplies voltage to the intelligent Star Coupler (4) and the power supply (5).

The second switching controller (7) is supplied by KL 30 during operation and is controlled by the microprocessor via the cable SHDN 2. The capacitor is charged as of KL R.

The charging of the capacitor forms the emergency energy reserve. The capacitor voltage is 400 V.

Electrical Power Supply in the Event of a Crash

If the vehicle voltage falls below approx. 8 V, the switching controller (7) uses the reserve voltage from the capacitor.

The switching controller provides operating power to replace the missing voltage from KL 30 until the capacitor is fully discharged or the vehicle voltage is restored.

Operation of the switching controller is controlled by the microprocessor across the cable SHDN2. If KL R is off, the switching controller is switched off again, but there is no discharge of the memory backup capacitor.

Closed-Circuit Current Cutout

The switching controller (8), which supplies voltage to the Star Coupler and satellites, is switched off by the microprocessor (3) in sleep mode via the signal SHDN1 (shut down) to reduce the current draw of the module to below 1mA.

In order to ensure the necessary basic functions occur also in sleep mode, a 9.8 V linear controller (1) is switched in parallel to the switching controller and this is permanently in operation.

The wakeable S/E (transmitter/receiver) modules in the Star Coupler and a downstream 5 V linear controller (2) are supplied with this voltage. This second linear controller supplies the microprocessor.

The satellites (SZL, ZGM) are connected to the wakeable S/E modules, and these satellites are able to wake up the *byteflight*. The other S/E modules are supplied via the switch (9) by the switching controller (8) and are switched off in sleep mode.

cardiagn.com

Intelligent Distributor

The intelligent distributor of the SIM performs the following tasks:

- Power supply for each individual satellite.
- Current limitation for each individual satellite.
- Power shutdown for each individual satellite in the event of a fault.

In order to ensure reliable function of the ISIS, all the satellites are supplied with voltage centrally by the SIM. To ensure that the system functions perfectly in the event of a short circuit or overload on one of the supply lines, there must be an intelligent current distribution.

The distributor integrated in the SIM limits the current on each supply line to the satellites to 100 mA (Approx. 10V). An exception is the SZL, which has a current intake of approx. 120 mA, as the steering wheel electronics are also supplied.

If this current limit is exceeded, it causes a reduction in the current output. It is also possible to switch off each individual satellite.

Intelligent Star Coupler

The transmitter and receiver module is a component that is able to convert electrical signals into optical signals and transmit them across the *byteflight* fiber-optic bus.

Each satellite has a transmitter and receiver module (S/E module).

Each of the S/E modules is connected via the *byteflight* with the Intelligent Star Coupler in the SIM. In the SIM, there is also a transmitter and receiver module for each satellite.

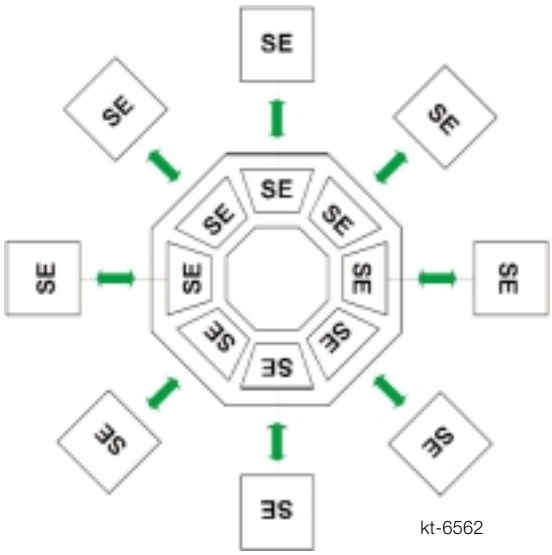

cardiagn.com

byteflight Master

The byteflight master has two tasks to perform:

- Generation of the synchronization pulses (Sync. Pulse)
- Setting the satellites in alarm mode (Alarm Pulse)

In the ISIS, the SIM is configured as *byteflight* master (bus master). In principle, any satellite can be configured by software as bus master. However, there may only be one bus master in the system.

All other satellites (bus slaves) use the sync pulse for internal synchronization. Each slave can transmit telegrams between the sync. pulses on the *byteflight*.

Synchronization Pulses

The SIM provides the synchronization pulses at intervals of 250µs. The alarm mode is transmitted across the width of the sync. pulse. The duration of a sync. pulse in alarm status is approx. 2µs. Normally, the synchronization pulse lasts approx. 3µs.

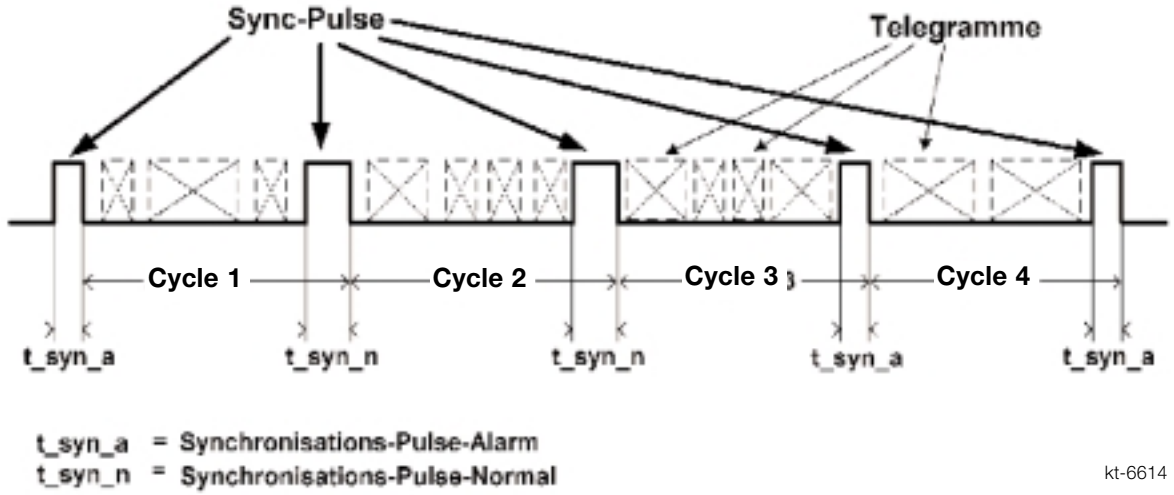

The duration of a complete telegram can vary between 4.6 to 16µs.

On the basis of all the available information provided by the sensors, the bus master (SIM) must decide whether the satellites are to be set in the alarm mode.

When the alarm mode is set by the SIM, all the trigger circuits (B+) of the ISIS are placed on trigger standby.

cardiagn.com

To trigger a stage, two separate signals must always be transmitted on the *byteflight*. The high-side (B+) switch of the trigger circuit in the satellites is controlled via the alarm mode of the *byteflight*.

The low-side switch is controlled by the microprocessor in the satellites. On the basis of the transmitted telegrams with the sensor signals, the trigger algorithm recognizes when the low-side (ground) switch has to be closed.

The following graphic uses a trigger stage as an example to show signal paths necessary for triggering.

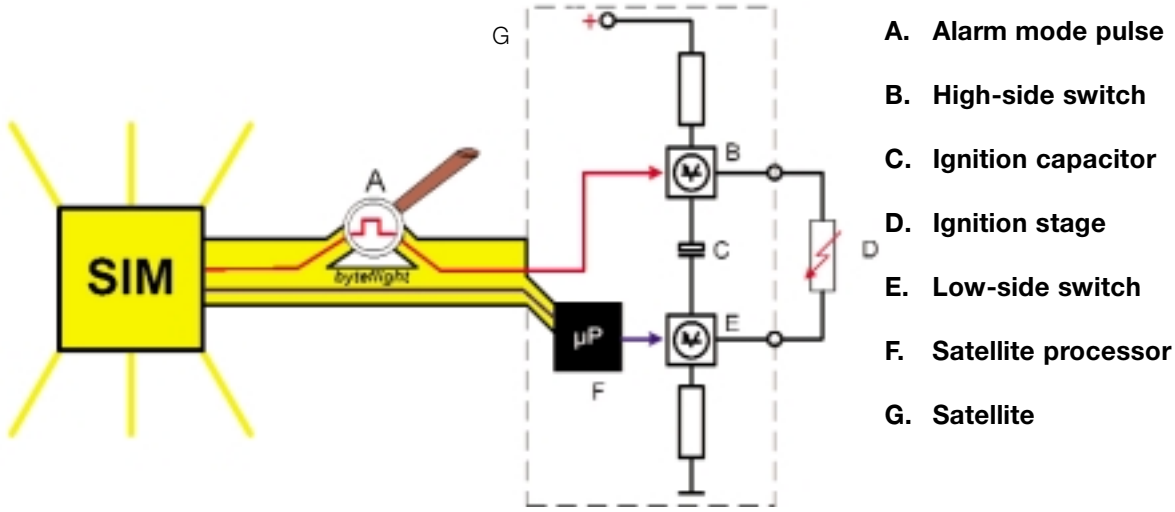

Watchdog Function

The Intelligent Distributor allows the SIM to deactivate the power supply for individual satellites. This possibility is used to implement a watchdog function. The relevant status telegram is used to monitor the satellites. If any of the following faults is detected by the bus master (SIM), the satellite is deactivated:

- Internal fault in the satellite.
- System time incorrect.
- Status telegram not received.

Depending on the type of fault, up to two attempts are made to switch on again after 100 ms. If the power on reset in the satellite module does not rectify the fault, the satellite remains off until the next wake-up of the bus system.

cardiagn.com

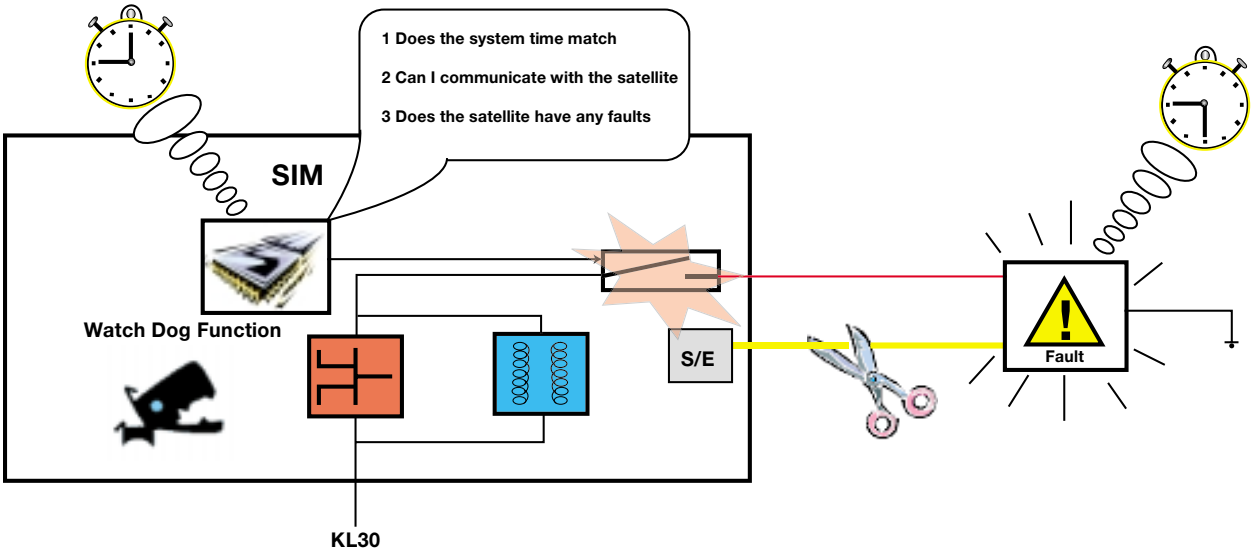

System Time

The system time is used as a reference when events such as faults or triggering of pyrotechnic actuators are recorded. This feature enables time recording of stored events in various control units.

The SIM is the bus master in the ISIS system and thus responsible for generating the synchronization pulses. This is why it makes sense for the SIM to also be the reference for the system time.

In the ISIS system, there is a uniform system time for all satellites (slaves). During production of the vehicle at the factory, the system time is started by means of a diagnosis command. This operation is only possible once, (a reset of the system time is not possible).

The resolution of this time is 250µs and it is triggered by the sync. pulses on the *byteflight*. This means that only the actual operation time during which the *byteflight* is active is recorded. The maximum time that can be recorded is over 76,000 hours.

The time is stored in the RAM of the microprocessor. Under the following conditions, there is also an entry in the EEPROM:

- Once per hour.
- On transition into the sleep mode.
- When the battery is disconnected (Shut-down signal from PM).
- When the complete system is supplied by the energy reserve.

cardiagn.com

Synchronization of the System Time

In order to ensure the same system time in all modules, a regular synchronization of all satellites is necessary.

There is a distinction between the synchronization in normal operation and synchronization of new modules installed in the vehicle as spare parts.

The mileage reading is also stored in the SIM. In order to set up a relation between the system time and mileage reading, the current mileage reading is saved during the synchronization of the system time.

Synchronization in Normal Operation

When the *byteflight* is started following sleep mode and approx. every 16 s during operation, the SIM transmits a "system time" telegram.

Due to the relatively low priority of the telegram, there is no assurance that the routing takes place immediately. This leads to a possible difference between the time in the SIM and the time in the satellites.

As the SIM knows the time of the transmission of the telegram, a correction is possible.

A second telegram "system time" with the correction value as part of the content is sent.

The correct system time is therefore the total of the values of the two system time telegrams. The satellites only adopt the system time when both system time telegrams have been received.

cardiagn.com

Self-Diagnosis of the ISIS

The self-diagnosis of the overall system ISIS consists of:

- Self-diagnosis of the SIM
- Pre-drive check, phase 1
- Pre-drive check, phase 2
- Self-diagnosis in operation

Self-Diagnosis of the SIM

When KL R is switched on, or at wake-up, an internal self-diagnosis of the SIM is carried out first.

If a fault occurs during the tests, it is entered in the fault memory, stopping the program and disabling communication on the bus.

Since the instrument cluster receives no bus signals, the airbag warning lamp (AWL) is activated.

Pre-Drive Check

When KL R is switched on, a self-diagnosis of the overall systems is carried out. During this period the system cannot be triggered.

This is indicated by activation of the airbag warning lamp AWL. The total duration of a fault-free pre-drive check is less than five seconds.

The pre-drive check is divided into two phases.

The pre-drive check only starts when the SIM has received the first control unit status messages from all of the satellites known by coding and no fault has been communicated.

If the status message of a module is not received or if a fault has been communicated, the power supply of the satellite module is switched off.

cardiagn.com

Pre-Drive Check, Phase 1

In phase 1 of the pre-drive check, the igniter output stages are tested (with the exception of the high-side transistor, which is controlled via the alarm pulse).

During phase 1, no alarm pulse is generated. The sensors are stimulated and tested. On conclusion of this test the result is communicated in the control unit status telegram. An OK signal is only transmitted if all the tests have run without faults.

If any faults occur during the pre-drive check, these are stored in the fault memory.

Pre-Drive Check, Phase 2

In phase 2 of the pre-drive check, the alarm path from the SIM to the igniter output stages is checked.

The SIM transmits an alarm pulse, which is taken back after a 30 ms waiting period. Now each satellite transmits a status telegram with an OK signal to the SIM.

If the alarm mode is not correctly received, a fault entry is made in the fault memory.

This concludes the pre-drive check and the modules can now start normal operation. This means that the satellites with ignition capacitors can now be charged.

If all ignition capacitors are fully charged, this is notified in the status telegram to the SIM.

The AWL is switched off when all the modules report full ignition capacitors and no fault is stored.

Self-Diagnosis During Operation

During operation, the SIM continuously monitors itself. If a fault is found, the *byteflight* communication is stopped and the power supply of the satellites is switched off by the SIM. (See watchdog function)

The S/E modules are capable of diagnosing the optical signal quality. A warning signal is generated when the optical reception quality falls below a certain threshold. The communication still can function without faults.

The SIM and all the satellites continuously check the VIN received across the *byteflight* against the VIN entered in the control units. If there is no match or an entry is missing, the AWL is switched on.

cardiagn.com

byteflight

The information about the *byteflight* communication technology is described in the chapter “Bus Systems”.

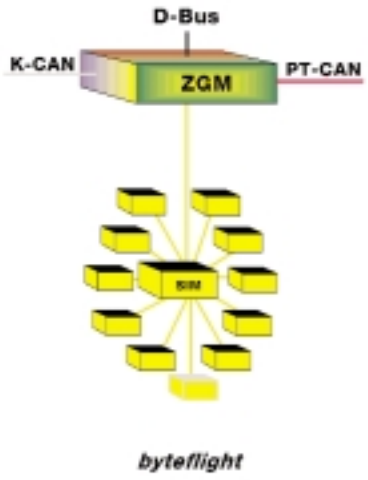

A-Pillar Satellite, Left and Right (SASL/SASR)

The satellites of the A-pillar left/right are virtually identical.

The satellites are installed to the left and right under the A-pillar trim panel in the footwell.

The A-pillar satellites have integrated transverse (side impact) and longitudinal (front or rear impact) sensors.

The SASL is responsible for deploying the Advanced Head Protection airbags (AHPS I/II) and the drivers side knee airbag.

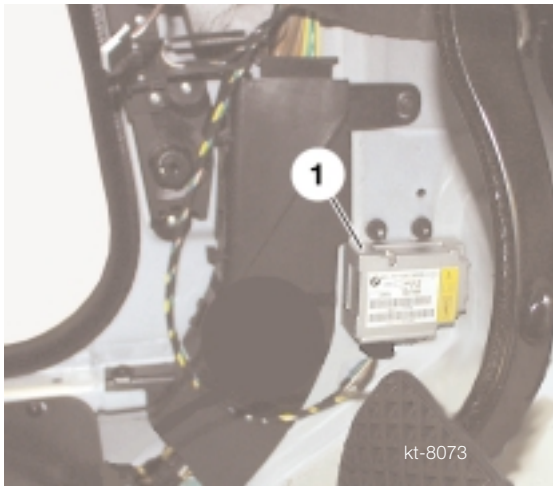

The SASR is responsible for deploying the passenger airbag, the AHPSI/II and the passenger knee airbag.

The A-pillar satellites are connected to the SIM via the *byteflight*. The power supply of the satellites is also from the SIM and it is buffered by the memory backup capacitor.

In sleep mode of the *byteflight*, the power supply of the SASL/SASR is deactivated by the SIM. The watchdog function is run by the SIM.

cardiagn.com

1. **Voltage regulator**
2. **Igniter output stage for AHPS I/II and knee airbag**
3. **Ignition stage for AHPS I/II**
4. **Ignition stage for knee airbag**
5. **Ignition output stage for passenger airbag**
6. **Ignition stage 1 for passenger airbag**
7. **Ignition stage 2 for passenger airbag**
8. **Longitudinal accel. sensor**
9. **Transverse accel. sensor**
10. **Transmitter/Receiver module**
11. **Microprocessor**

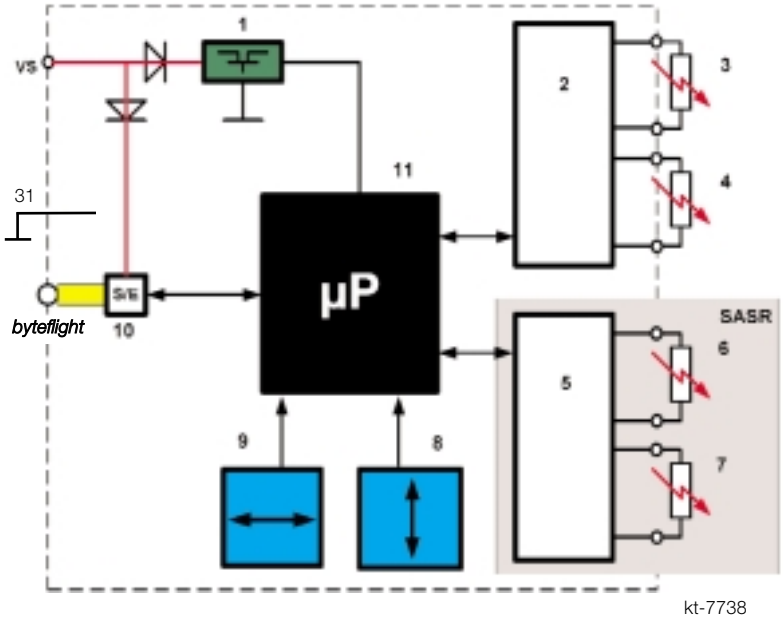

A-Pillar Satellite Sensors

One acceleration sensor for the longitudinal acceleration and one for the transversal acceleration are integrated in the A-pillar satellites.

The sensors provide a variable voltage. This voltage is a measurement of the vehicle acceleration. This voltage signal is filtered, amplified, converted and transmitted as a data telegram.

The strategic arrangement of acceleration sensors in the vehicle and the sensor data recognized in satellites, enable recognition of the direction and crash severity.

For the ISIS system, a detected crash severity and direction of the impact are distinguished according to frontal, side, or rear-end collision.

With the involvement of the seat occupation detection, the seatbelt buckle input and using a stored trigger algorithm, accident-relevant triggering of the pyrotechnic actuators (e.g. seatbelt tensioner, airbags) is intended to achieve the greatest possible degree of occupant protection.

cardiagn.com

Self-Diagnosis of the Trigger Circuits During the Pre-Drive Check

During the pre-drive check, the entire trigger circuits are checked. If no faults occur during the check, the ignition capacitors are charged and the satellites are ready for triggering. Self-diagnosis includes:

- Check of the coding of the trigger circuit for plausibility.
- Check of the trigger circuit for short circuit to ground or B+.
- Check of the trigger circuit for open-circuit.
- Check of the ignition capacity and ignition voltage.
- Check of the trigger circuit resistance.
- Test of the low-side switch.
- Test of the high-side switch and the alarm path.

The check of the high-side and low-side switches takes place with the ignition capacitor discharged. If any of the faults listed below are detected in a trigger circuit, the ignition capacitor stays discharged.

This prevents accidental deployment of the trigger circuit if another fault occurs during operation.

For all other faults, there is no danger of accidental deployment. The fault is indicated by the AWL and stored in the fault code memory.

Self-Diagnosis in Normal Operation

In normal operation, there is a constant check of the trigger circuits. A fault message is issued, but only when the fault is confirmed over a specified period of time.

If a short circuit to ground or B+ is detected, the corresponding ignition capacitor is discharged.

In normal operation, the self-diagnosis is restricted to checks of the trigger circuit for short circuits and open circuits.

cardiagn.com

B-Pillar Satellite, Left (SBSL)

The SBSL is located in the left B-pillar above the seatbelt inertia reel. The SBSL contains a sensor for transverse acceleration only.

The left B-pillar satellite is responsible for deploying the drivers seatbelt tension limiter.

kt-8052

kt-8074

The SBSL satellite is connected to the SIM via the *byteflight*. The power supply of the satellite is also from the SIM and it is buffered by the memory backup capacitor.

In sleep mode of the *byteflight*, the power supply of the SBSL is deactivated by the SIM.

The watchdog function is run via the SIM. The SBSL monitors the ignition stage for the belt tension limiter of the seatbelt on the driver's side.

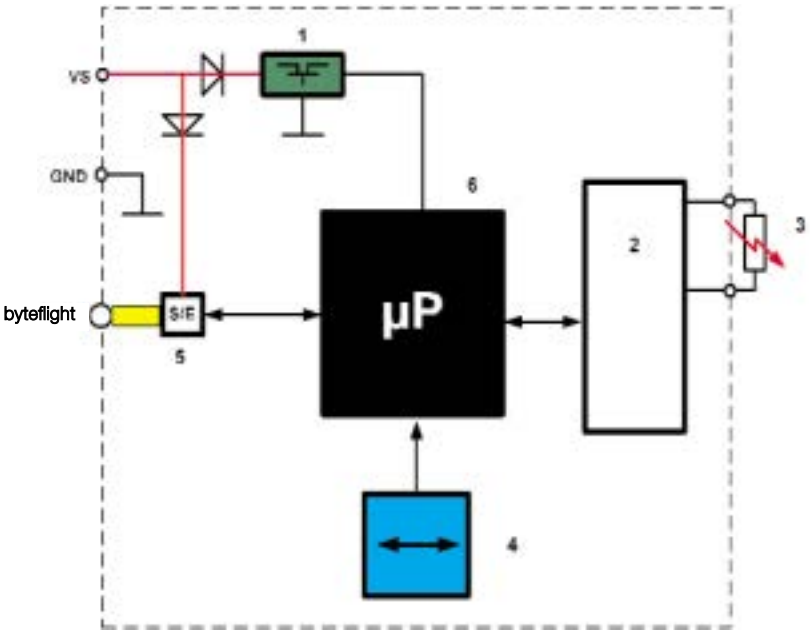

1. **Voltage regulator**
2. **Ignition output stage seatbelt tension limiter**
3. **Ignition stage for seatbelt tension limiter**
4. **Transverse acceleration sensor**
5. **Transmitter/Receiver module**
6. **Microprocessor**

cardiagn.com

Sensor

An acceleration sensor for the transversal acceleration is integrated in the SBSL. The sensor provides a variable voltage. This voltage is a measurement of the vehicle's sideways acceleration.

The ignition stages are diagnosed by igniter ICs and ignited by means of ignition capacitors.

The self-diagnosis of the trigger circuits during the pre-drive check and in normal operation is the same for all satellites. (See SASL)

B-Pillar Satellite, Right (SBSR)

The SBSR is located in the right side B-pillar above the seatbelt inertia reel. The SBSL contains a sensor for transverse acceleration only.

The right side B-pillar satellite is responsible for deploying the passenger seatbelt tension limiter, the battery safety terminal (BST) and for operating the fuel pump (EKP).

kt-8052

kt-8053

The satellite SBSR is connected to the SIM via the *byteflight*. The power supply of the satellites is also from the SIM and it is buffered by the memory backup capacitor.

The voltage supply of the electric fuel pump is by means of a separate terminal 30.

In the sleep mode of the *byteflight*, the power supply of the SBSR is switched off by the SIM; the operating voltage of the electric fuel pump is unaffected by this.

The "watchdog" function is run by the SIM.

cardiagn.com

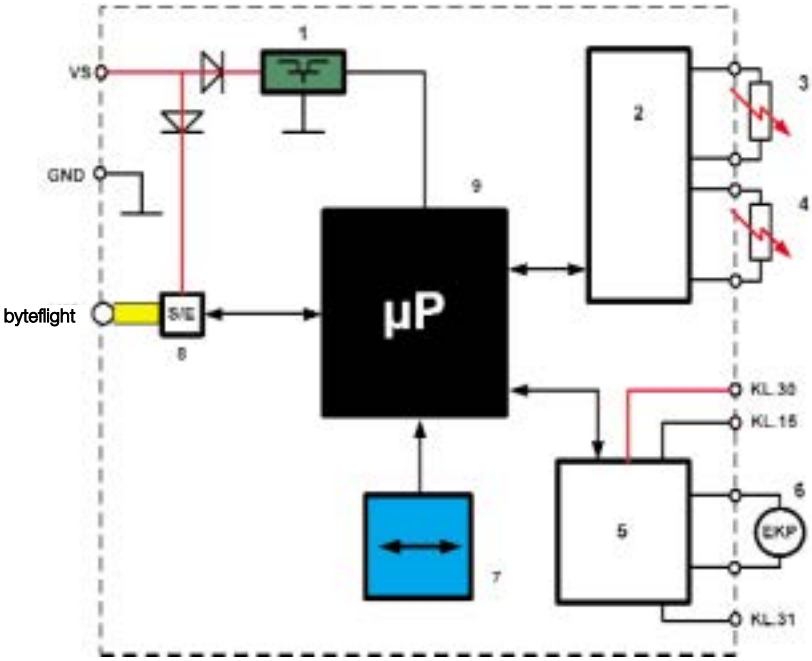

1. **Voltage regulator**
2. **Ignition output stage seatbelt tension limiter and BST**
3. **Ignition stage for seatbelt tension limiter**
4. **Ignition stage for BST**
5. **Final stage for fuel pump**
6. **Electric fuel pump**
7. **Transverse acceleration sensor**
8. **Transmitter/Receiver module**
9. **Microprocessor**

Sensor

An acceleration sensor for the transverse acceleration is integrated in the SBSR. The sensor provides a variable voltage. This voltage is a measurement of the vehicle's sideways acceleration.

The ignition stages are diagnosed and controlled by the ignition ICs. The self-diagnosis of the trigger circuits during the pre-drive check and in normal operation is the same for all satellites. (See SASL)

Electronic Control of the Fuel Pump

The SBSR of the ISIS system controls the fuel pump delivery rate during operation of the vehicle and fuel supply cutoff in the event of a crash.

The advantages of having a variable fuel pump delivery rate are:

- Reduction of tank warming (evaporative emissions reduction).
- Reduction of the power consumption by approx. 50 Watts.
- Increase of the fuel pump service life.
- Integration of crash deactivation.
- Elimination of the fuel pump (EKP) relay.

cardiagn.com

The fuel is supplied depending on consumption. The DME (ECM) determines a fuel requirement in liters per hour (l/h).

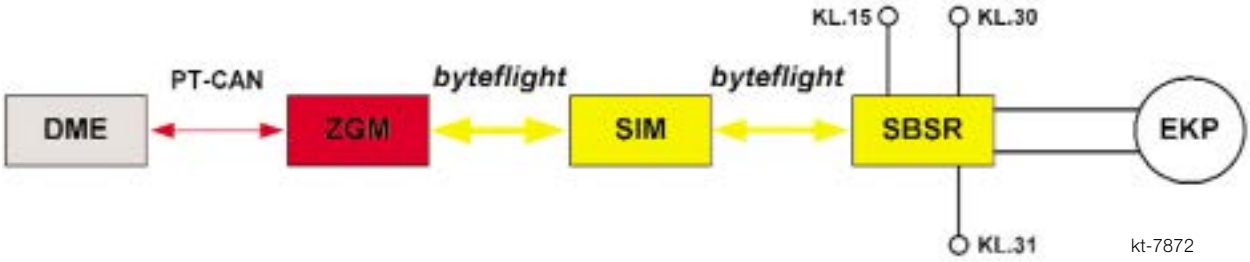

The SBSR receives the fuel requirement from the DME (ECM) via the PT-CAN and the *byteflight*. If the fuel requirement from the DME (ECM) fails, or the bus system is defective, the fuel pump is operated at maximum speed (default).

The delivery volume of the fuel pump is regulated by the electronic control of the EKP voltage supply.

In the microprocessor, the required quantity from DME (ECM) is converted into a pulse-width-modulated signal and transmitted to the EKP controller. The adjustable pulse width produces a variable voltage that is used to operate the fuel pump.

The current consumption (Amps) of the pump is measured in the EKP controller, this determines the rotation speed of the pump. The rotation speed is transmitted to the microprocessor, which calculates the current fuel delivery volume. The delivery volume is checked using a setpoint / actual comparison and the control voltage is corrected if necessary.

Fuel Cutoff After a Collision

If the ISIS system detects a crash of sufficient severity, the fuel pump is shut down to prevent a possible fire if fuel lines under the hood were to be damaged. The fuel pump can then be reactivated by switching the ignition off and on. At that point the fuel pump is again ready for operation.

cardiagn.com

Seat Satellite, Driver / Passenger (SSFA / SSBF)

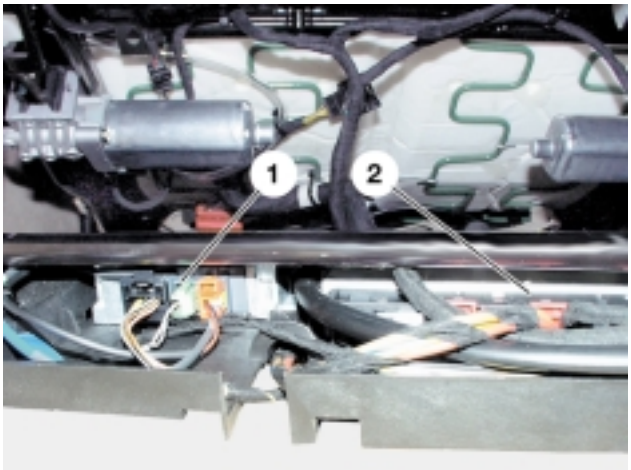

The satellites of the driver and passenger side are identical. The satellite is located below the seat frame between the seat rails. It is fitted with the seat module beneath a cover in a plastic tray.

1. Seat Satellite

2. Seat Module

The SSFA/SSBF contain no acceleration sensors but do evaluate the seat occupancy (SBE) sensors and the seatbelt buckle switches.

The seat satellites are responsible for deploying the driver/passenger seatbelt tensioners and the Active Head Restraint (comfort seat option only).

The satellite SSFA / SSBF are connected to the SIM via the *byteflight*. The power supply of the satellites is also from the SIM and it is buffered by the memory backup capacitor. In sleep mode of the *byteflight*, the power supply of the SSFA / SSBF is deactivated by the SIM. The watchdog function is run by the SIM.

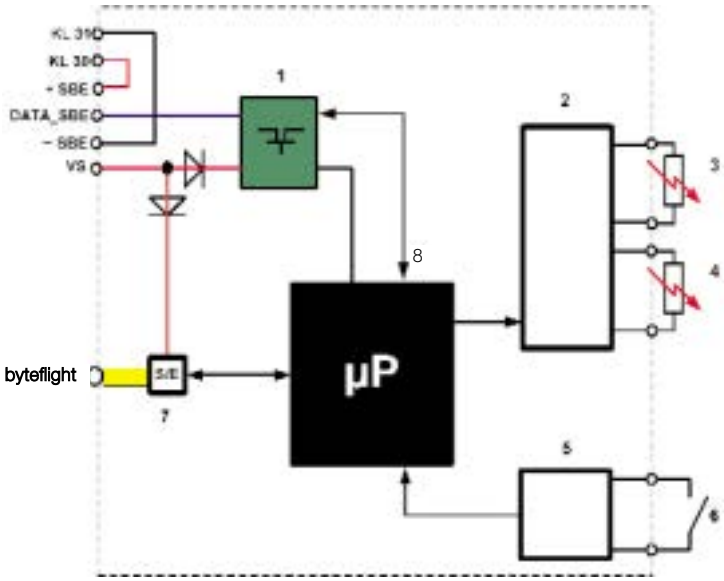

1. **Voltage regulator**
2. **Ignition output stage, seatbelt tensioner and active head restraint**
3. **Ignition stage for seatbelt tensioner**
4. **Ignition stage for active head restraint**
5. **Interface for buckle switch**
6. **Belt buckle switch**
7. **Transmitter/Receiver module**
8. **Microprocessor**

cardiagn.com

The satellites SSFA/SSBF control and monitor the trigger circuits of the seatbelt lock tensioners and the Active Head Restraints. The belt buckles are monitored by a Hall sensor. The Hall switches are identical to those of the E38 since 3/97. The seat occupation detection is monitored via an interface in the satellite.

Seat Satellite, Rear (SSH)

The rear seat satellite is installed if the vehicle is ordered with rear side airbags (SA 261). The special equipment also includes the Advanced HPS (AHPS) for rear seat passengers, but these are triggered by the SASL/SASR. The rear seat satellite is fitted beneath the rear seat cushion in the middle area.

kt-7038

The SSH contains no acceleration sensors but does evaluate the rear seat occupancy (SBE) sensors.

The seat satellite, rear is responsible for deploying the left/right rear passenger airbags and seatbelt tensioners. Additionally if the vehicle is equipped with basic seats the SSH is responsible for controlling the electric rear head restraints.

The satellite SSH is connected to the SIM via the *byteflight*. The power supply of the satellites is also from the SIM and it is buffered by the memory backup capacitor. In sleep mode of the *byteflight*, the power supply of the SSH is deactivated by the SIM. The watchdog function is run by the SIM.

The power supply for the head restraint adjustment is unaffected by this.

cardiagn.com

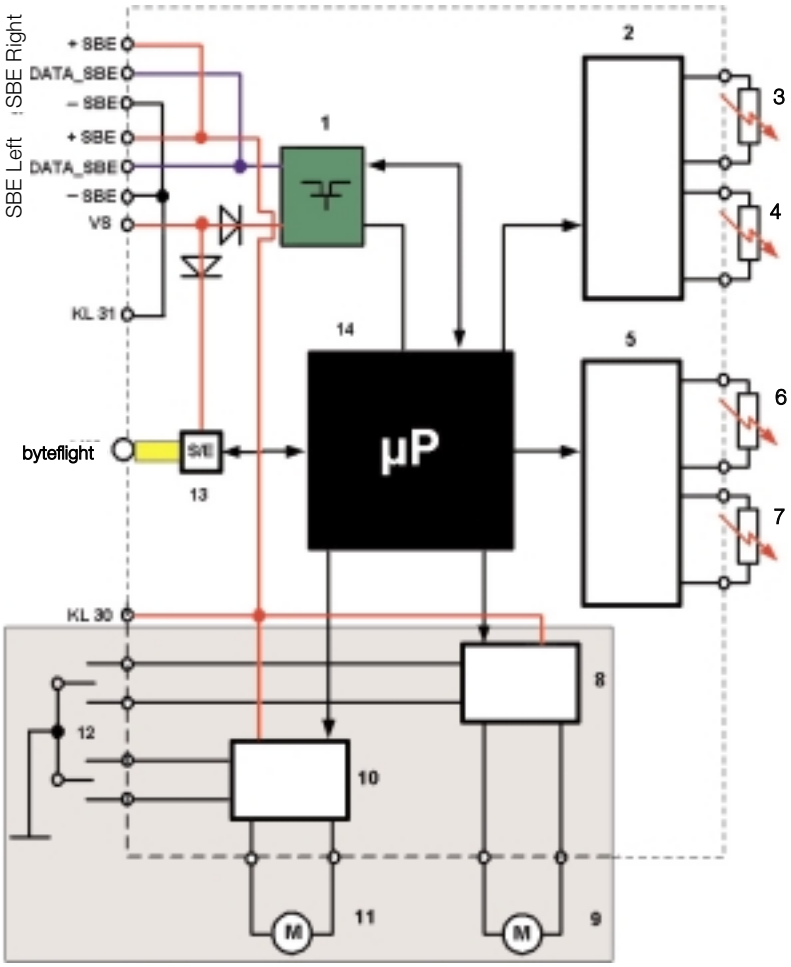

1. **Voltage regulator**
2. **Ignition output stage for side airbag and seatbelt tensioner**
3. **Ignition stage for side airbag right rear**
4. **Ignition stage for seat belt tensioner, right rear**
5. **Ignition output stage for side airbag and seatbelt tensioner**
6. **Ignition stage for side airbag left rear**
7. **Ignition stage for seat belt tensioner, left rear**
8. **Output stage for head restraint, right**
9. **Motor for head restraint**
10. **Output stage for head restraint,Left**
11. **Motor for head restraint**
12. **Switch for head restraint**
13. **Transmitter/Receiver module**
14. **Microprocessor**

Note: Operation of the head restraints on vehicles equipped with rear Comfort seats is carried out by the seat modules.

Rear Head Restraints

The rear head restraints are moved out automatically by an electric motor if the seat occupation detection detects an occupant and KL R is on.

The head restraint is returned to its lowest position when KL R is switched off or an empty seat is detected.

cardiagn.com

Front Door Satellite, Left/Right (STVL/STVR)

The STVL/STVR are located inside the front doors, attached to the inner door carriers. The STVL/STVR contain a pressure sensor.

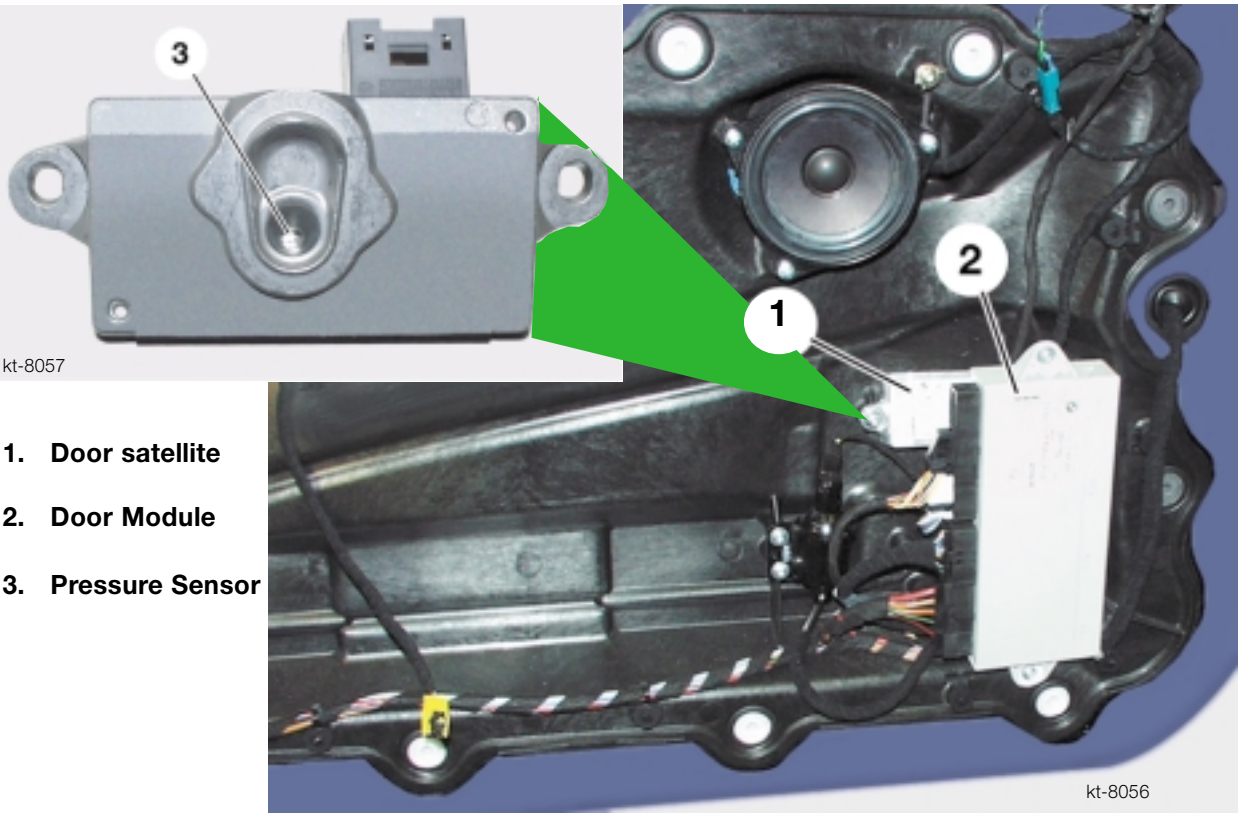

1. **Door satellite**
2. **Door Module**
3. **Pressure Sensor**

The front door satellites are responsible for deploying the driver and passenger side airbags.

The satellite STVL / R is connected to the SIM via the *byteflight*. The power supply of the satellites is also from the SIM and it is buffered by the memory backup capacitor. In sleep mode of the *byteflight*, the power supply of the STVL / R is deactivated by the SIM. The watchdog function is run by the SIM.

cardiagn.com

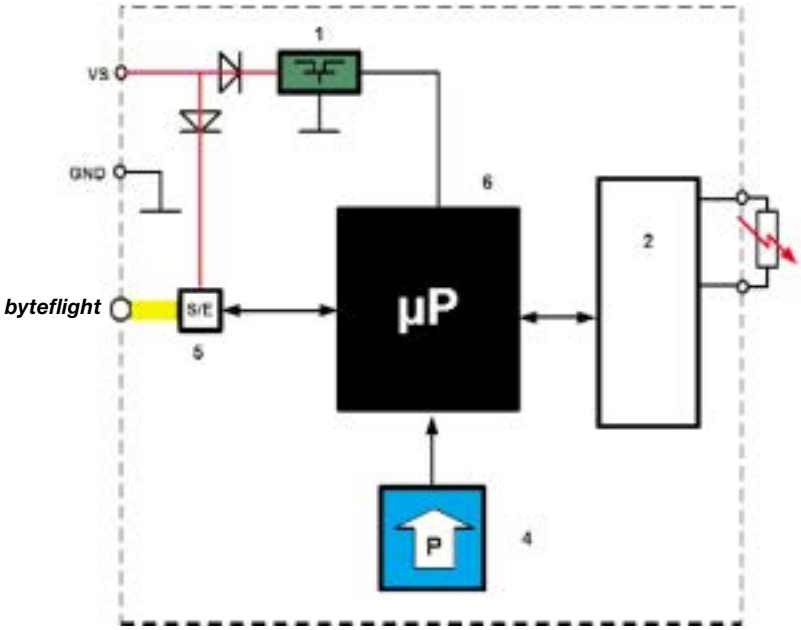

1. **Voltage Regulator**
2. **Ignition output stage for side airbag**
3. **Ignition stage for side airbag**
4. **Pressure Sensor**
5. **Transmitter/Receiver module**
6. **Microprocessor**

Sensor System

A pressure sensor is integrated into the front door satellite. In the event of a collision, penetration of the door outer skin reduces the volume of the door, which leads to a significant rise in pressure.

The relative pressure change and rise in pressure evaluated over time are important factors for the crash evaluation.

The ignition stages are diagnosed and controlled by the igniter ICs. The self-diagnosis of the trigger circuits during the pre-drive check and in normal operation is the same for all satellites. (See SASL)

cardiagn.com

Vehicle Center Satellite (SFZ)

The SFZ is located on the transmission tunnel, under the front center console. The SFZ contains a transverse and longitudinal acceleration sensor.

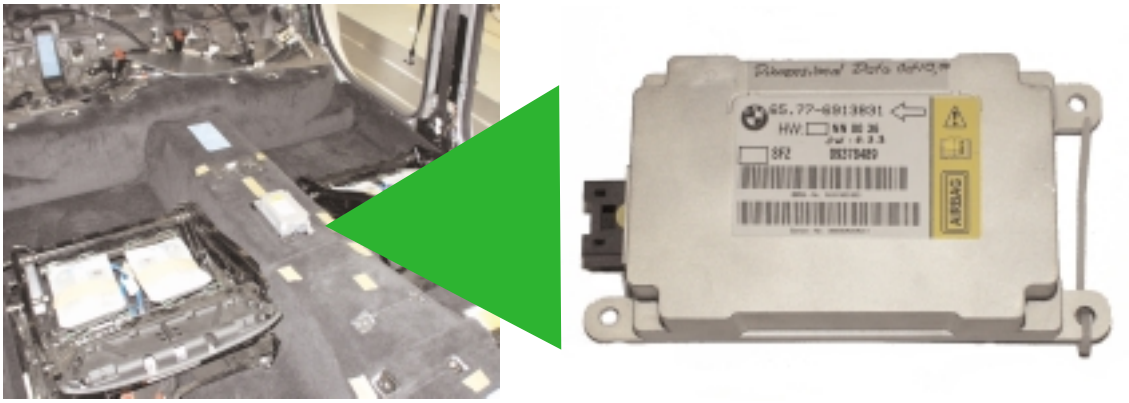

The vehicle center satellite, center is not responsible for deploying any airbags or pyrotechnic devices.

The SFZ is connected to the SIM via the ***byteflight***. The power supply of the satellite is also from the SIM and it is buffered by the memory backup capacitor. In sleep mode of the ***byteflight***, the power supply of the SFZ is deactivated by the SIM. The watchdog function is run via the SIM.

Sensor System

The vehicle center satellite only records sensor data; it has no triggering functions. One acceleration sensor for the longitudinal acceleration forces and one for the transversal acceleration forces are integrated in the SFZ. The sensors provide a variable voltage. This voltage is a measurement of the vehicle acceleration. This information is provided to the SIM and the other satellites for evaluation of crash thresholds.

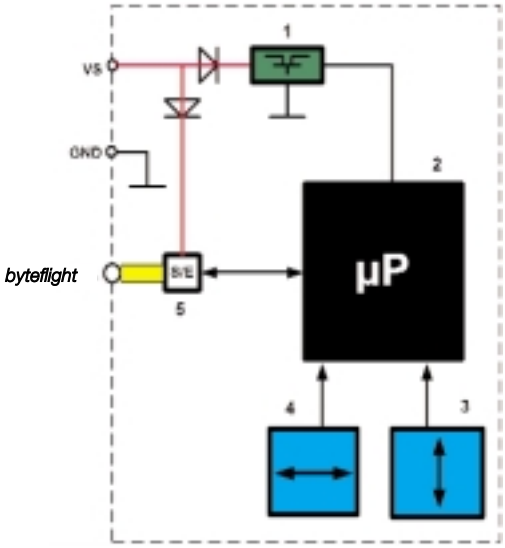

kt-6883

1. **Voltage regulator**
2. **Microprocessor**
3. **Longitudinal acceleration sensor**
4. **Transverse acceleration sensor**
5. **Transmitter/Receiver module**

cardiagn.com

Steering Column Switch Center (SZL)

All the components on the steering wheel are controlled by the steering column switch center unit (SZL). The SZL is divided into two electronic modules. One is located in the steering wheel and the other is attached to the steering column. Both units are connected by means of spiral spring.

The SZL contains no ISIS sensors and is responsible for deploying the drivers airbag.

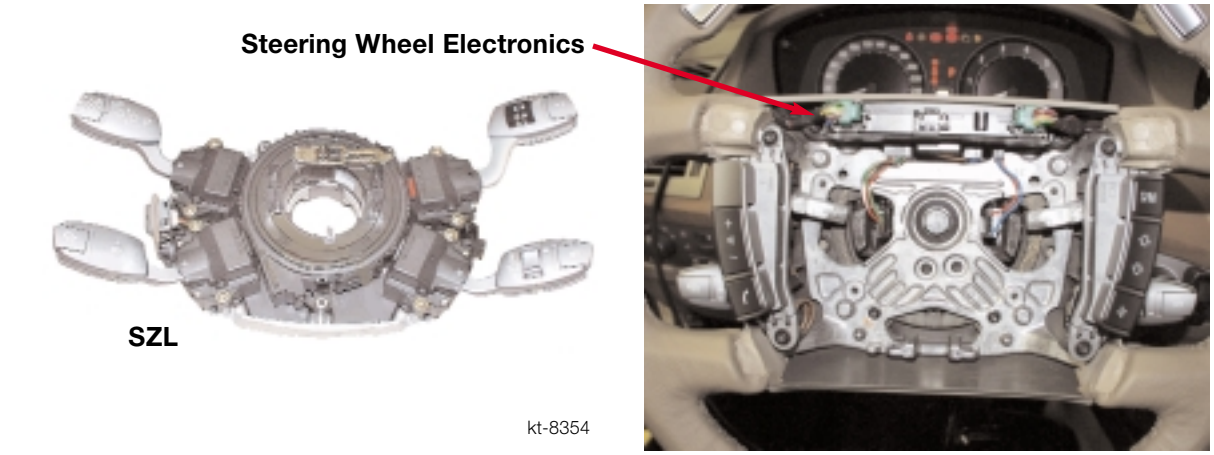

The SZL is integrated in the steering column electronics and linked to the SIM via the *byteflight*. The power supply of the SZL is also from the SIM and it is buffered by the memory backup capacitor.

In addition, there is a KL 30 for the supply of circuit elements not relevant to safety (e.g. steering wheel heating) and a KL 15 “ON” from the CAS for redundancy.

In sleep mode of the *byteflight*, the power supply of the SZL is deactivated by the SIM. The watchdog function is run by the SIM.

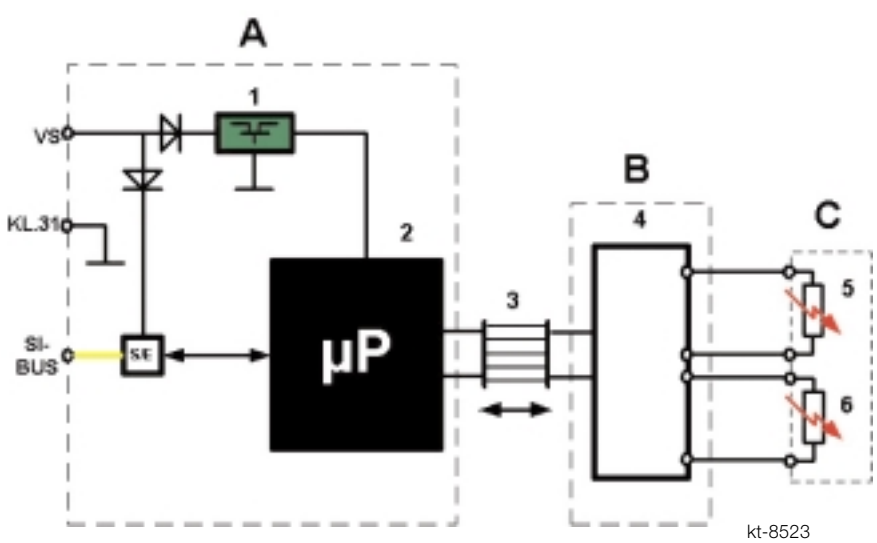

A. Satellite
B. Steering wheel electronics
C. Airbag
1. Voltage regulator
2. Microprocessor
3. Coil spring
4. Ignition output stage
5. Driver airbag ignition stage 1
6. Driver airbag ignition stage 2

cardiagn.com

Central Gateway Module (ZGM)

The ZGM is installed in the module carrier behind the glovebox. The Central Gateway Module does not contain any sensors and is not responsible for deploying any airbags or pyrotechnic devices.

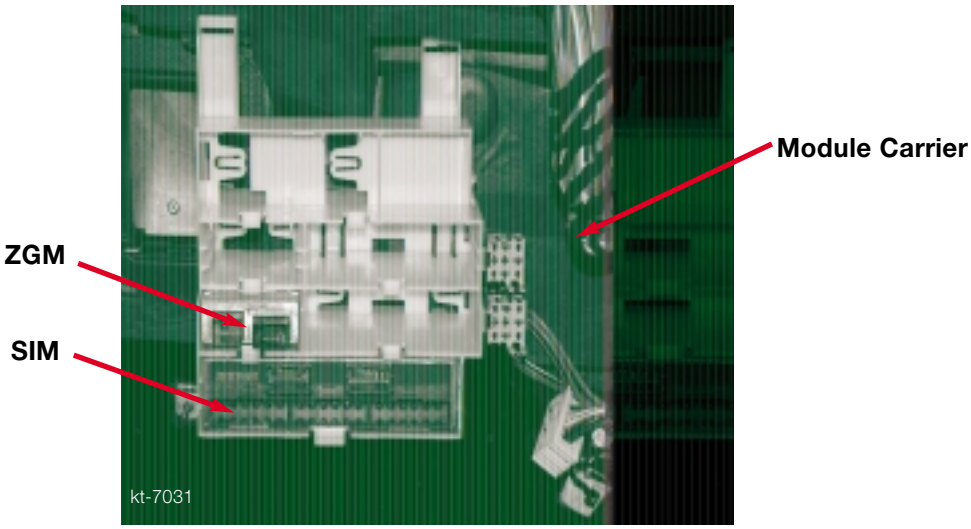

The ZGM has the task of coordinating the various data speeds of the telegrams between the buses and directing messages between the individual bus systems. The following busses are connected to the ZGM:

- *byteflight*
- K-CAN-System
- PT-CAN and PT wake-up line
- Diagnosis bus

1. **Voltage regulator**
2. **Microprocessor**
3. **Data memory EEPROM**
4. **Interface for D-bus**
5. **Interface for K-CAN-S**
6. **Interface for PT-CAN**
7. **Transmitter/receiver module**
8. **Wake-up logic module**

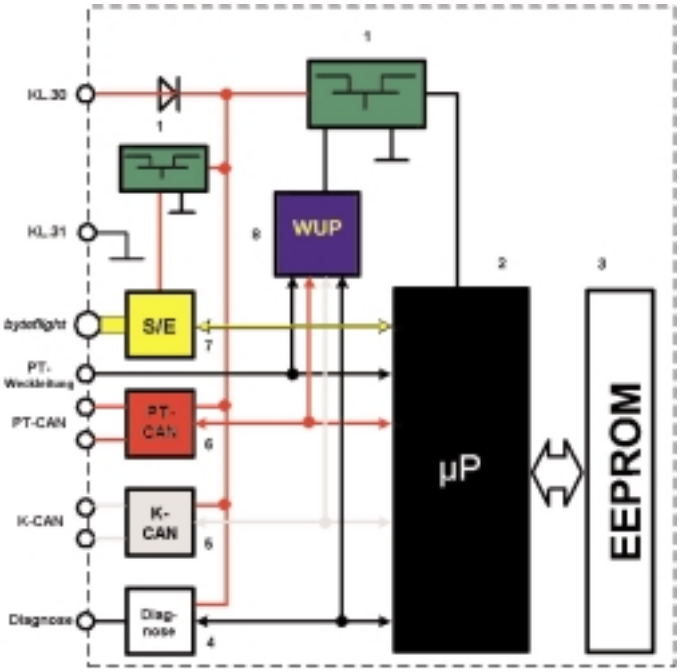

kt-8396

cardiagn.com

Driver Airbag

A 2-stage driver “SMART” airbag, (which has been available since 3/99) is used on the E65.

The airbag has a volume of approx. 62 liters. There is only one design for all trim levels.

Depending on the crash severity detected, the two ignition stages are ignited. The faster the two ignitions succeed one another, the faster the airbag is filled. To eliminate hazards during rescue operations or disposal, both priming caps are always triggered.

New for the E65 is the color matching of the airbag unit to the interior color trim. Airbag units are offered in the following colors: black, beige, grey or blue.

kt-8059

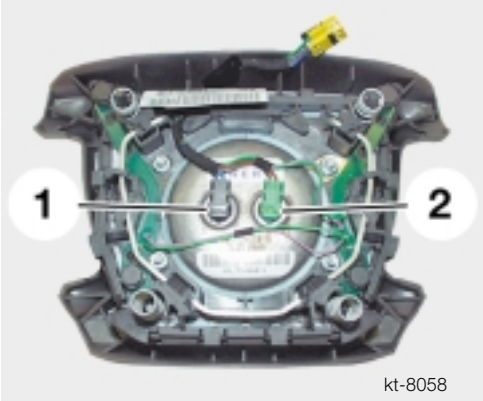

kt-8058

1. Ignition stage 1
2. Ignition stage 2

Passenger Airbag

The front passenger airbag is a 2-stage SMART airbag with a volume of approx. 135 liters. It is a hybrid technology design. The gas generator is a combination of solid fuel and inert gas. The passenger airbag module consists of a gas generator, airbag and housing. It is fitted beneath the instrument panel, above the glovebox and behind the CD changer.

The instrument panel has been designed in such a way that it tears open at defined points in the event of a crash and the airbag can emerge upwards. There is no separate cover for the airbag, this prevents the airbag from being deflected if the panel does not swing out of the way properly.

420902

420903

cardiagn.com

Knee Airbags

For the U.S. version of the E65, there is a new innovation, the knee airbag.

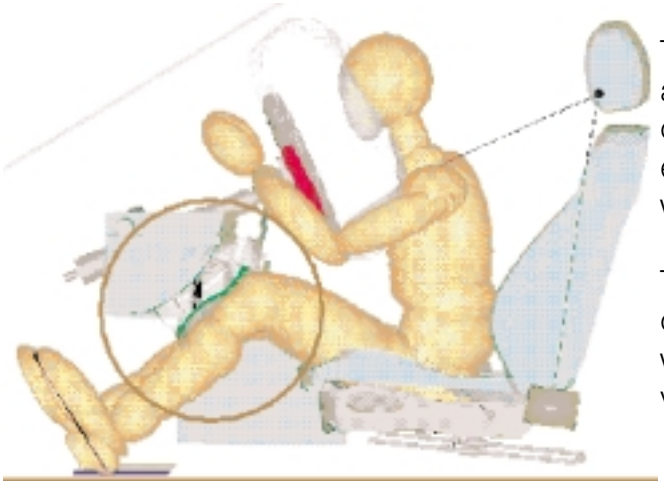

The knee airbag is installed on the driver and passenger side. In the event of a crash, the knee airbags support the knee, especially if the driver or passenger are not wearing seatbelts.

The location of these airbags produce a controlled forward shift of the upper body, which is cushioned by the conventional driver or passenger airbag.

The knee airbag on the driver's side is located below the steering column, it is incorporated into the under-dash trim.

Drivers Knee Airbag

kt-8187

kt-8188

The knee airbag on the passenger side is located in the lid of the glovebox, beneath a cover. The knee airbag is a one-stage airbag with gas generator. The volume is approx. 16 liters.

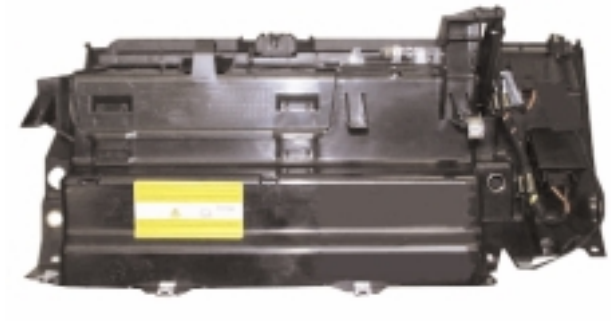

Passenger Knee Airbag

kt-8190

kt-8189

cardiagn.com

The airbag module on the driver's side consists of a plastic housing, the gas generator and the airbag. On the passenger side, it consists of a metal housing, the gas generator and the airbag.

For the passenger knee airbag, the glovebox lid is the mounting for the airbag module.

Operation

In the event of a crash of sufficient severity, the gas generator is ignited. The escaping gas fills the airbag located between the housing and the cover. The filling airbag presses the cover towards the occupant.

Several retaining belts fix the cover in its position in front of the air cushion. The passenger's knees touch the cover. Over the surface of the cover, the load is distributed across the airbag and the passenger is supported.

The support of the knee initiates a controlled forward shift of the upper body, which is cushioned by the driver or passenger airbag.

The knee airbags can only be seen by the lettering "AIRBAG" on the top right of the glovebox lid or top left on the driver's side and by the cable connection for the airbag module.

Advanced Head Protection System (AHPS)

New for the E65 is the Advanced HPS, (AHPS) an extended head airbag. The ITS Inflatable Tubular Structure familiar from other BMW models has been extended by a curtain.

There are two versions of the AHPS.

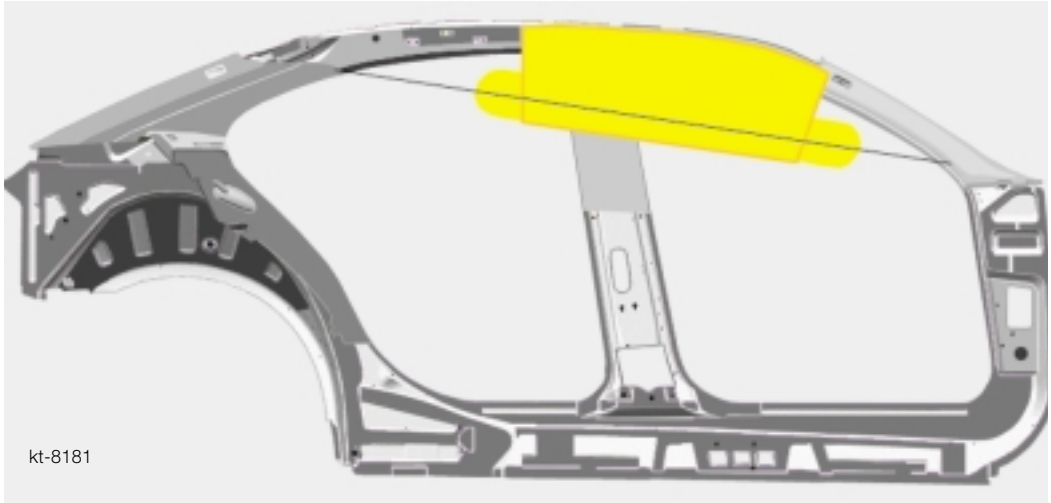

AHPS for front passengers only

cardiagn.com

The Advanced HPS I is for the head area of the driver and passenger. It runs from the A-pillar to behind the B-pillar, as before. The volume is approx. 12 liters.

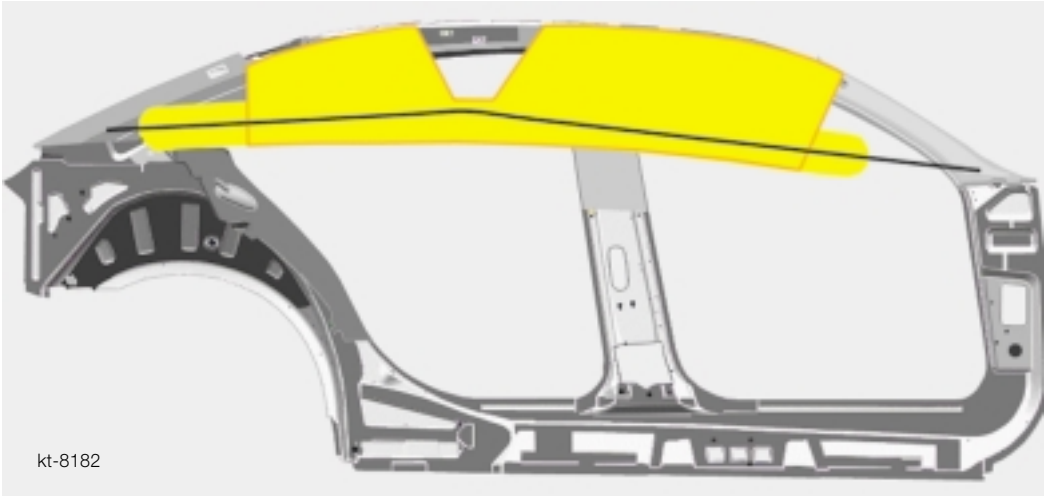

Optional AHPS for front and rear seat passengers

When rear airbags are ordered as an option (SA 261), there is the Advanced HPS II for the head area at the front and rear. The AHPS II runs from the A-pillar to the C-pillar and covers the entire side section. The volume is approx. 24 liters.

In conjunction with the side airbags in the front and rear doors, it provides optimum side protection for all passengers. The Advanced HPS prevents the head and other extremities of the occupants from swinging outward. This leads to less severe neck backlash forces and less severe head injuries.

Advantages of the system:

- Extended covered area for side windows front and rear.
- Protection against glass splinters and penetrating objects.
- Improved protection area for any size occupants.

cardiagn.com

Operation

The Advanced HPS is fitted in the roof zone. It consists of a woven tube with an additional curtain wrapped around it. The curtain is secured to the roof frame and is tensioned downward by the woven tube.

1. **Gas generator for AHPS II**
2. **Gas generator for AHPS I**

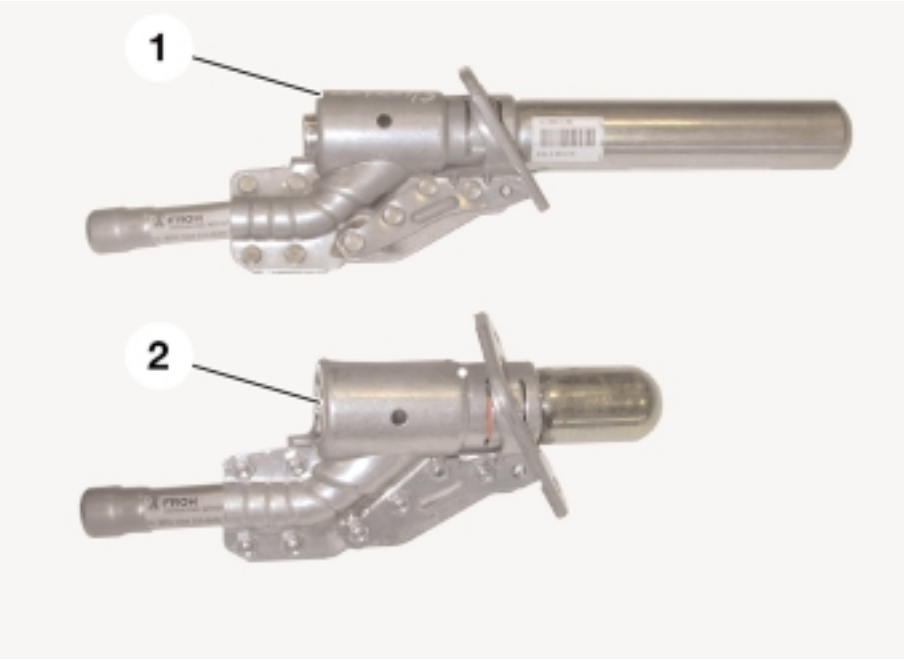

In the event of a side collision, the generator is ignited and the gas flows through the gas injector into the woven tube. The woven tube expands to approx. 130 mm in diameter and its length is reduced.

Secure fitting of the woven tube on the A-pillar and the C-pillar HPS II or on the roof frame (AHPS I) brings the head airbag into position. In the process, the curtain tightens between the side window or pillar trim and the occupant.

The high tensioning force in the woven tube pulls the curtain downward, which increases the stability of the curtain. The closed system means that the structural firmness and stability remain for several seconds. This is an advantage if the vehicle rolls over.

cardiagn.com

Side Airbags

On the E65, side airbags are installed in the front doors and are optional for the rear doors. The strategy of having the rear side airbags disconnected from the factory continues with the E65. The AHPS II system is not affected because they pose no risk to children sitting out of position.

The side airbags reduce the risk of occupant injury in the torso region of the body in the case of a side collision. Compared to the AHPS, the side airbags deflate relatively quickly, with a precise damping effect.

In conjunction with the Advanced HPS, it provides optimum side protection. The airbag shape is designed to be compatible with various occupant positions and sizes. The principle of the side airbags is identical to that used so far in the other models.

A new feature is that the airbags are fitted in a function unit within the door trim. This significantly improves the effect if the inflation is obstructed, (e.g. occupants leaning heavily on the paneling).

Moreover, the airbag no longer emerges into the passenger compartment by opening a cover in the door trim, but by tearing a seam in the middle area of the panel.

As before, a one-stage gas generator with a high proportion of inert gas is used. The volume is approx. 12 liters. The front and rear airbags are identical parts. The front side airbag is bolted at two points, the rear at another additional point to the door frame.

cardiagn.com

Front Belt Tension Limiter

The belt tension limiters for the driver and passenger seat are inertia reel seatbelts with adaptive force limitation.

A gas generator is used to switch from a high degree of force to a lower degree of force. This also has to be possible during an accident to achieve a regressive force reduction. The advantage of the adaptive belt tension limiter is the considerable reduction of the load on the chest in the event of a crash.

With optimum coordination to the airbag, the kinetic energy of the occupant is reduced evenly across the duration of the crash, thus achieving low occupant load values.

kt-8060

1. **Pyrotechnic connector**

Operation

The adaptive force limitation is based on a two-stage torsion bar (stage shaft). The torsion bar consists of the two head ends left and right, the stages and the center head. The belt force is transferred to the seatbelt roller. The seatbelt roller is connected to a sleeve that contains the torsion bar. There is a shaft ring with locking pawls on the sleeve. The locking pawls transfer the torque to the torsion bar.

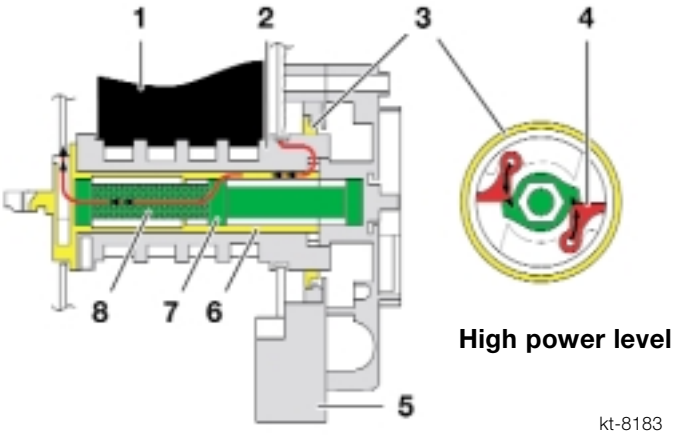

kt-8183

1. **Seatbelt webbing**
2. **Seatbelt roller**
3. **Shaft ring**
4. **Locking pawls**
5. **Housing**
6. **Sleeve**
7. **Center head**
8. **Torsion bar**

In the first stage, with the preset high level of force, the torque of the seatbelt roller is transferred via the locking pawls to the center head of the torsion bar.

If the seatbelt roller is turned relative to the fixed torsion bar, the force is transferred to the thicker part of the torsion bar. This produces the high power level. This is the function of a normal emergency locking retractor.

cardiagn.com

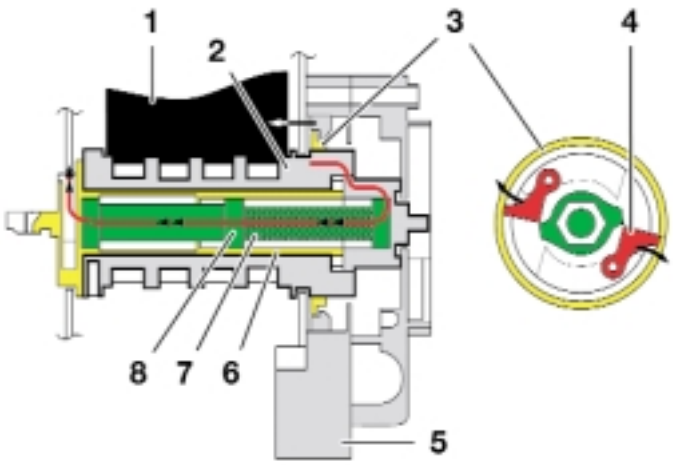

1. **Seatbelt webbing**
2. **Seatbelt roller**
3. **Shaft ring**
4. **Locking pawls**
5. **Housing**
6. **Sleeve**
7. **Center head**
8. **Torsion bar**

In the event of a crash, the gas generator is ignited and a plunger moves out, shifting the shaft ring axially. The locking pawls are now no longer held by the sleeve and no longer transfer more torque to the center head of the torsion bar.

The belt force is now passed across the right-hand head end into the stage shaft and runs through the entire torsion bar. The lower diameter on the right-hand side means that the torsion bar is twisted further and thus the force is reduced to a lower level.

Seatbelt Upper Anchor Position

Using new simulation methods with regard to installation and ergonomics, it was determined that there is an optimal area for all occupants to locate the seatbelt upper anchor.

The anchor point is no longer adjusted automatically based on seat movement as the system on the previous model. In addition the fitting is now designed as a roller. The low friction power (drag) of the seatbelt increases wearing comfort.

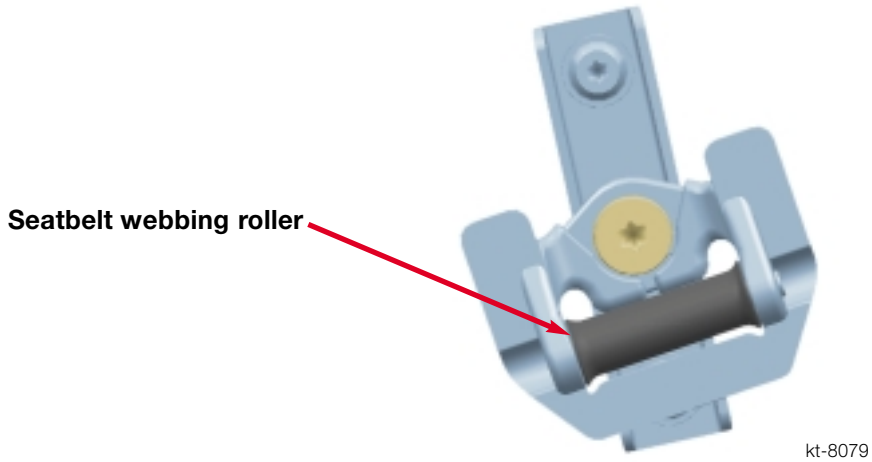

cardiagn.com

Front Seatbelt Tensioners

On the E65, pyrotechnic seatbelt tensioners are used for the driver and passenger seat. The principle of the seatbelt lock tensioner is the same as that used in the E38/E39.

The seatbelt tensioner has the task in the event of a crash to remove or reduce any belt slack in the pelvic and shoulder region.

The belt slack comes about mainly due to the motion of the occupants or due to clothing, (especially when heavy clothing are worn in the winter).

This ensures that the occupant is restrained firmly on the seat and prevents "submarining", slipping under a slack seatbelt.

There is also earlier restraint and thus earlier binding to the vehicle. The seatbelt tensioner forms a unit with the seatbelt buckle. It consists of an ignition stage, generator, plunger and cable. The belt buckle switch is integrated in the seatbelt buckle.

In the event of a crash of sufficient severity, the gas generator is ignited. The gas spreads and shifts the plunger in the tensioning pipe. The cable connected to the plunger then pulls the seatbelt buckle downward and the belt slack from the belt system.

On the E65, there are the following technical changes. The ignition stage is no longer directly connected onto the gas generator but rather the connection comes out on a cable together with the belt buckle switch cable and is plugged under the seat. If the seatbelt tensioner needs replacing, the seat does not have to be removed.

cardiagn.com

Rear Seatbelt (End Fitting) Tensioner

If the rear airbag package is ordered, end fitting tensioners are fitted for the outer rear seats. In the middle, a three-point automatic belt is fitted. (The basic version has 3 three-point automatic belts.)

The rear seatbelt consists of the following components:

1. **Inertia reel with single-stage mechanical force transmission**
2. **Sliding latch plate**
3. **Belt (end fitting) tensioner**
4. **Belt buckle**

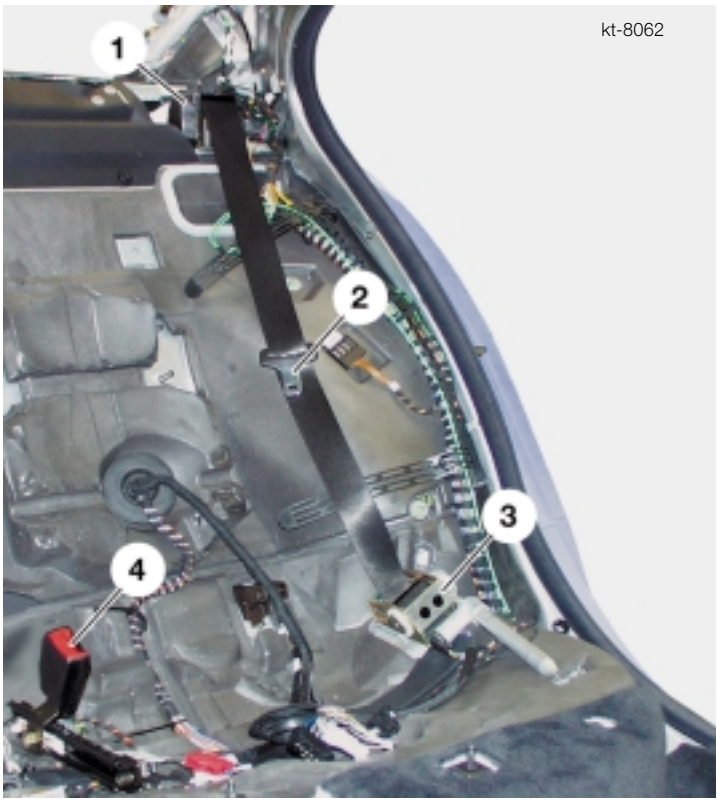

The rear end fitting tensioners have the same task as the seatbelt tensioners at the front, that is removing the slack in the belt during the crash as well as early binding of the occupant to the vehicle deceleration (called riding out the crash).

Since the space available beneath the rear seat is limited, it meant that a component similar to the front seatbelt tensioner could not be used, a new solution had to be found.

The belt slack is removed by drawing in the seatbelt strap at the end fitting point. The inertia reel seatbelt forms the upper attachment point, the end fitting tensioner is the lower attachment point.

cardiagn.com

The end fitting tensioner consists of the following components:

1. **Tensioning tube**
2. **Gas generator**
3. **Electrical connector**
4. **Belt roller**
5. **Seatbelt webbing**
6. **Housing**
7. **Roller coupling**
8. **Cable pulley**
9. **Cable**

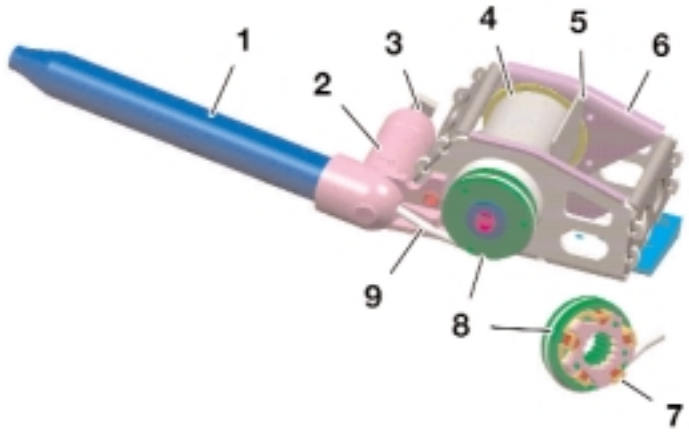

Operation

The rear seat satellite (SSH) ignites the ignition stage in the event of a crash if the seat has been detected as occupied.

When the gas generator ignites, the rise in pressure shifts a plunger in the pipe. The cable end is drawn in the pipe in a linear direction by the plunger. The other cable end is wound by a pulley and turns the belt winding shaft.

A roller coupling blocks the belt winding shaft so that when force is applied into the belt system after the tensioning process this can no longer be turned back. The end fitting tensioners tighten the belt slack at the pelvic area first and then the chest area belt slack.

The tensioning path is determined by the cable pulley diameter and the usable plunger travel. The maximum tensioning length is approx. 150 mm.

cardiagn.com

Seat Occupancy Detection

kt-8067

Seat occupancy detection mats are installed in the seat cushion of the driver and passenger seat and if equipped with optional rear airbags, they are also used in the left and right rear seats.

The sensor mat is identical to the mats used in previous models for the MRS systems. The sensor system consists of pressure sensors that use an electronic evaluation unit (SBE) to detect whether there is weight on the seat.

As of a weight of approx. 12 kg (26.4lbs.), the seat is recognized as occupied. The electronic evaluation units of the seat occupation mats are connected to the relevant satellites. (SSFA/SSBF=sensors for front seat, SSH=sensors for rear seat)

The information regarding seat occupation is required for activation of the following functions:

kt-8064

- Airbag activation
- Activation of the seatbelt tensioners and/or end fitting tensioners
- Triggering the active head restraints
- Automatic positioning of the rear head-restraints

Seatbelt Buckle Switch

The belt buckle switch used in the E65 is a two-wire Hall switch, as already in use in various models since 3/97.

The airbags triggering thresholds are different depending on the crash severity and depending on whether the seatbelt has been fastened or not.

The belt buckle switch is located in the seatbelt buckle on the driver and passenger seat. It is used to detect whether the seatbelt has been fastened or not. The detection arrives as a signal at the relevant satellites. The detection serves to trigger the pyrotechnic actuators in the event of a crash,(e.g. seatbelt tensioner, airbags etc.)

The belt buckle switch also serves to initiate a seatbelt warning in case the vehicle is started without a seatbelt having been fastened.

cardiagn.com

Active Head Restraint System (AKS)

Another innovation of the E65 is the Active Head Restraint System which is part of the driver and passenger multifunction seat (comfort seat).

No active head restraint is installed for the basic seat, as the fixed positioning between the backrest and head restraint means that the occupants head is always positioned near the head restraint.

In a rear-end collision, the occupants are accelerated along with the vehicle. The upper torso and pelvis of the occupants rest against the backrest and thus absorb this acceleration immediately.

The head, in contrast, is usually not in constant contact with the seat and therefore is slower to respond to the forces acting on the vehicle body. In the initial phase of the crash, the head remains in its original position. In relation to the body, which moves forwards, the head moves backwards.

It is only when the head makes contact with the head restraint that this relative movement between head and body is reduced and the head then is accelerated at the same rate as the body.

This pitching motion of the head, leads to cervical vertebrae injuries (whiplash). The danger of cervical vertebrae injuries is higher when there is a greater distance between the head and head restraint. The head restraints are intended to prevent, to the greatest possible extent, the dangerous pitching motion of the head.

In the case of the multifunction seat, the adjustability of the head restraint means that there is the possibility that the gap between the head restraint and head increases. In the event of a crash, the gap could be relatively large, leading to greater strain on the cervical vertebrae.

For this reason, the active head restraint was developed. In the event of a crash, this system reduces the gap between the head restraint and head and thus the rate of cervical vertebrae injuries.

cardiagn.com

1. **Mounting of the AKS**
2. **Electrical connection for ignition stage.**
3. **Gas generator**
4. **Support bar**
5. **Center of rotation**
6. **Head restraint height adjustment**

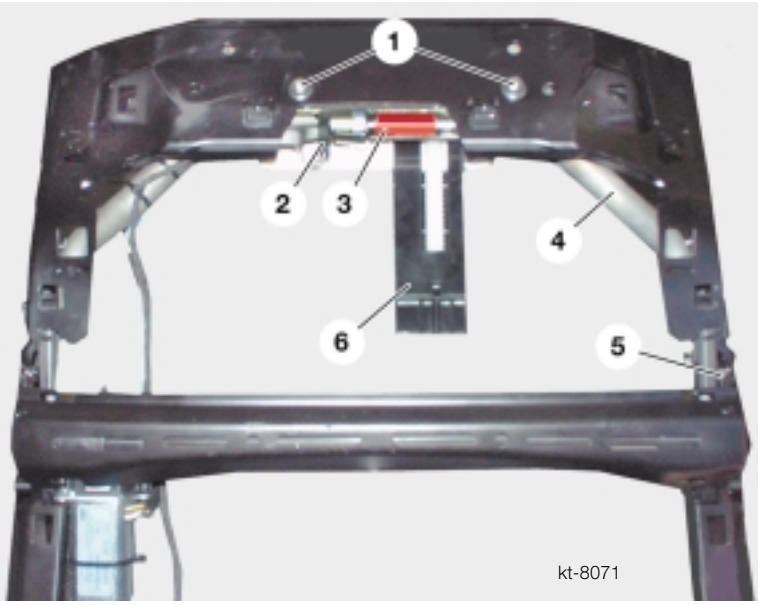

The active head restraint system is located in the backrest of the multifunction seat. It consists of a support tube, which is fitted on bearings in the backrest. A retaining plate attaches the system firmly with the backrest.

The support tube serves as fixture for the head restraint, the adjustment mechanism of the head restraint, as well as the head restraint height adjustment.

The adjustment mechanism consists of a retaining plate and a sliding element. The sliding element is a moveable part connected to the gate located on the support tube. The retaining plate is firmly attached to the backrest. The generator is located between the retaining plate and the sliding element.

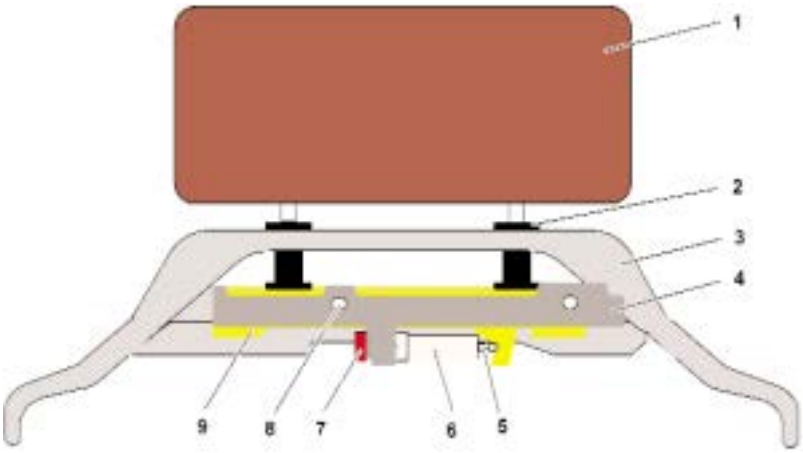

1. **Head restraint**
2. **Guides**
3. **Support tube**
4. **Retaining plate**
5. **Push rod**
6. **Gas generator**
7. **Ignition stage**
8. **Mounting points**
9. **Sliding element**

cardiagn.com

The generator consists of a casing, plunger, ignition stage and connection. It is attached to the retaining plate and the sliding element by spring clips.

In the event of a crash, the ignition stage is activated, the solid fuel burns and the gas produced forces out the push rod. The push rod moves out and shifts the sliding element.

The support tube is pivoted forwards because of the slanted, elongated holes in the support tube which the sliding element rides in.

This means that the head restraint attached to the support tube is also moved in the direction of travel. The adjustment range of the headrest is approx. 9 degrees.

Depending on the vertical adjustment of the head restraint at the time, different adjusting distances can result. The adjustment of the head restraint, measured on the cushion, is approx. 40 mm when the head restraint is retracted (all the way down).

When the head restraint is fully extended (all the way up), the adjustment is approx. 60 mm.

If the Active Head restraint has been triggered in a crash, only the gas generator needs to be replaced to return the system to normal function.

AKS in stand-by position

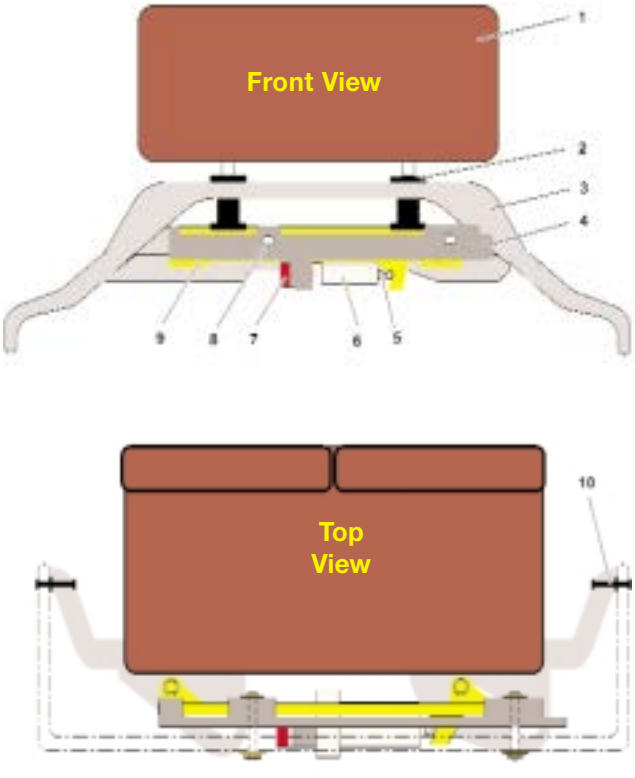

kt-7855

AKS in deployed position

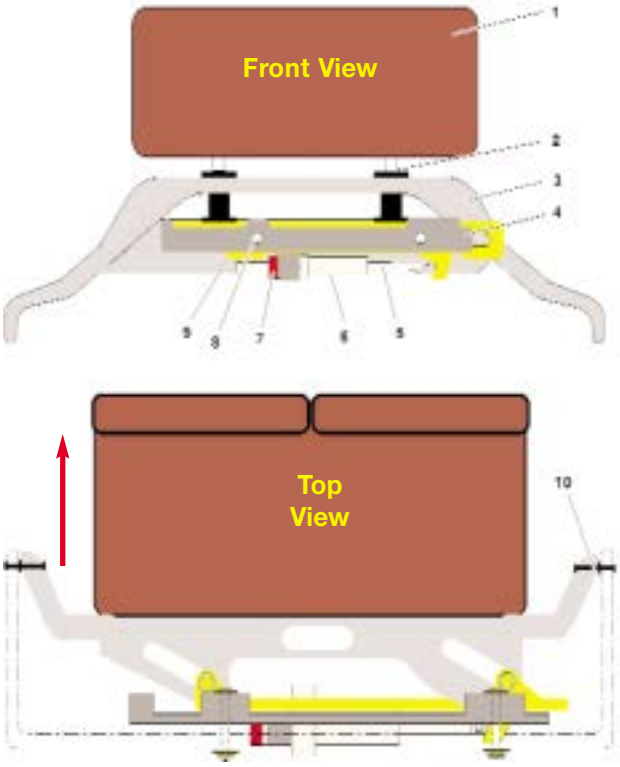

kt-7856

cardiagn.com

Battery Safety Terminal (BST)

The Battery Safety Terminal (BST) is technically identical to the one used in MRS systems.

If the ISIS system detects a crash of sufficient severity, the ignition stage of the BST is triggered by the B-pillar satellite, right (SBSR).

A small quantity of solid fuel electrically and mechanically cuts the starter and alternator line from the positive terminal of the battery. This prevents possible short circuits in the engine compartment.

A separate vehicle electrical system connection through the Power Module ensures that the remaining vehicle circuit retains its function when the BST is triggered.

This ensures the operation of all the important functions such as lights, hazard warning lights, telephone emergency call, etc.

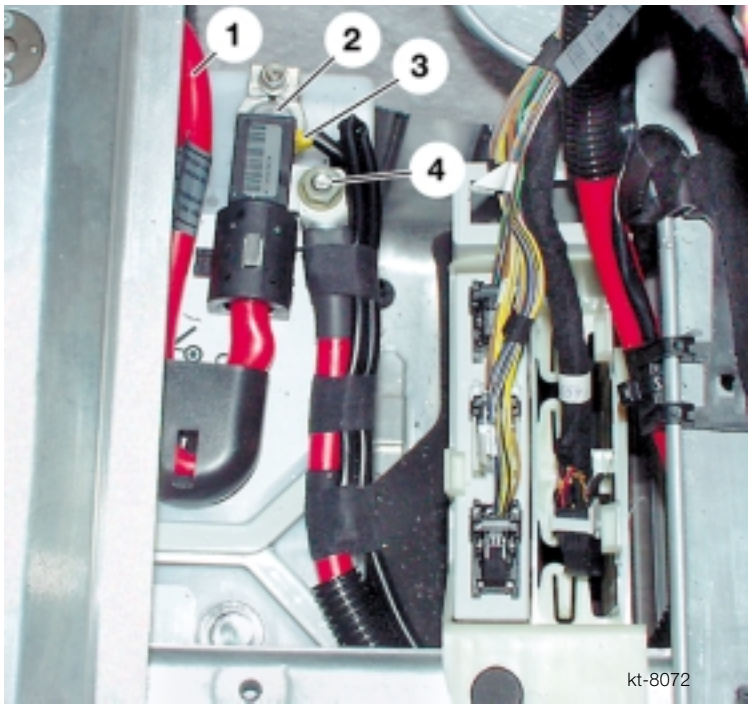

1. **Starter cable**
2. **Positive battery terminal**
3. **Ignition capsule**
4. **Connection for the Power Module and vehicle circuit supply**

cardiagn.com

Principle of Operation

Triggering Strategy

A completely new safety system, the ISIS, has been developed for the E65. With its decentralized satellites fitted at strategic points in the vehicle, it is possible for the first time to implement 100%, all-round detection on the vehicle.

Triggering Thresholds

Numerous crash and road tests under extreme conditions have been used to set the BMW triggering thresholds for all possible types of accidents.

The triggering thresholds are divided according to crash severity (CS). There are four types of crash severity:

1. **CS 0 Light collision No airbag activation**
2. **CS 1 Medium collision Possible airbag triggering, stage 1**
3. **CS 2 Severe collision Airbag triggering, stage 1**
4. **CS 3 Very severe collision Airbag triggering, stage 1 + 2**

The triggering thresholds are set depending on the crash severity as well as various other factors, (e.g. 0º, 30º, or offset crash).

Other important information is also included, such as whether the occupant is wearing a seatbelt or not.

This results in the trigger thresholds for the activation of the various restraint systems.

Depending on the type of accident, different crash severities have been specified:

- **Frontal crash CS 0, CS 1, CS 2, CS 3**
- **Side-impact crash CS 0, CS 1, CS 2**
- **Rear crash CS 0, CS 1, CS 2**

cardiagn.com

Example: Head-On impact with immovable object at 0°. Crash severity 3

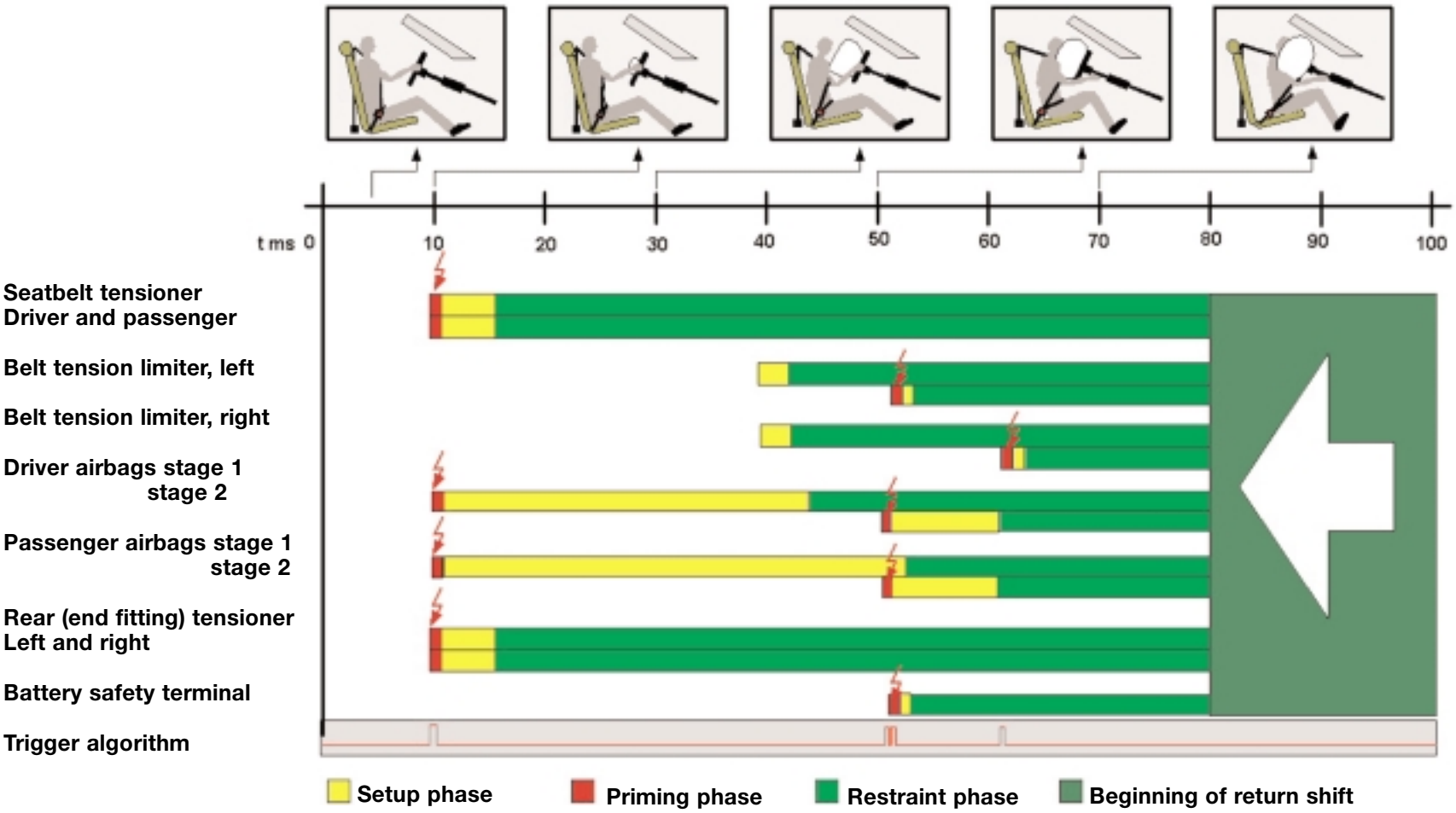

cardiagn.com

If a fault is detected in the seat occupancy detection system, it is assumed that the seat is occupied and the restraint systems are activated.

If a fault is detected in the seatbelt buckle detection system, it is assumed that the seatbelt is not fastened and the restraint systems are activated with CS1.

In spite of this an attempt is made to activate the seatbelt lock tensioner.

Frontal Collision CS 1
The table below shows the activated actuators with crash severity 1.

Actuators	Seatbelt Fastened	Seatbelt not Fastened	Remarks
Driver airbag stage 1		X	
Driver airbag stage 2		X	
Front passenger airbag, stage 1		X	
Front passenger airbag, stage 2		X	
Seatbelt tensioner, driver	X		
Seatbelt tensioner, passenger	X		If occupied
Rear seatbelt (end-fitting) tensioner, left (opt).	X	X	If occupied
Rear seatbelt (end-fitting) tensioner, right (opt).	X	X	If occupied

Frontal Collision CS 2 / CS 3
The activation of the airbag stages and the belt tension limiter takes place via differentiation of the crash severity with various decelerations on activation.

Actuators	Seatbelt Fastened	Seatbelt not Fastened	Remarks
Driver airbag stage 1	X	X	
Driver airbag stage 2	X	X	
Front passenger airbag, stage 1	X	X	If occupied
Front passenger airbag, stage 2	X	X	If occupied
Knee airbag, left	X	X	
Knee airbag, right	X	X	If occupied
Front seatbelt tension limiter, left	X		
Front seatbelt tension limiter, right	X		If occupied
Seatbelt tensioner, driver	X		
Seatbelt tensioner, passenger	X		If occupied
Rear seatbelt (end-fitting) tensioner, left (opt).	X	X	If occupied
Rear seatbelt (end-fitting) tensioner, right (opt).	X	X	If occupied
Battery Safety Terminal	X	X	
Stop electric fuel pump	X	X	
Emergency phone call	X	X	

cardiagn.com

Side Collision, Left CS1

Actuators	Remarks
AHPS I/II, left	
Side airbag, front left	
Side airbag, rear left	If occupied

Side Collision, Left CS2

Actuators	Remarks
AHPS I/II, left	
Side airbag, front left	
Side airbag, rear left	If occupied
Battery safety terminal	
Stop electrical fuel pump	
Emergency phone call	

Side Collision, Right CS1

Actuators	Remarks
AHPS I/II, right	If occupied
Side airbag, front right	If occupied
Side airbag, rear right	If occupied

Side Collision, Right CS2

Actuators	Remarks
AHPS I/II, right	
Side airbag, front right	If occupied
Side airbag, rear right	If occupied
Battery safety terminal	
Stop electrical fuel pump	
Emergency phone call	

Rear Collision CS1

Actuators	Remarks
Active Head restraint, driver	
Active Head restraint, passenger	If occupied

cardiagn.com

Rear Collision, CS2

Actuators	Remarks
Active Head restraint, driver	
Active Head restraint, passenger	If occupied
Seatbelt tensioner, driver	
Seatbelt tensioner, passenger	If occupied
Rear seatbelt (end fitting) tensioner, left	If occupied
Rear seatbelt (end fitting) tensioner, right	If occupied
Battery safety terminal	
Stop electric fuel pump	
Emergency phone call	

ISIS Emergency Call Function

Two different emergency calls are possible by telephone. An automatic emergency call triggered by the SIM, which has detected a corresponding crash severity, as well as a manually triggered emergency call via the emergency (SOS) call button.

To place an emergency call by telephone, the telephone and the telephone interface, including antenna system, must be on standby and supplied with sufficient power.

After triggering of the emergency call, an SMS message (Short Message Service: info such as vehicle location, how many airbags were deployed and what speed the crash occured at) is sent to the service provider and a voice connection is set up.

Two numbers are set for the two emergency call functions; these are dialled alternately until a connection is set up. If no connection has been set up after 60 seconds, the telephone dials the emergency number 911.

To support any recovery activity that might be necessary, the Light Module switches on the interior lighting and the hazard warning lights.

The central locking system is also unlocked by the CAS (Car Access System).

cardiagn.com

Automatic Emergency Call

If the ISIS system detects a crash of sufficient severity, the emergency call by telephone is triggered automatically. The emergency call contains data from the navigation computer concerning the location of the vehicle. When the emergency call reaches the service provider, the location data is displayed on the Control Display.

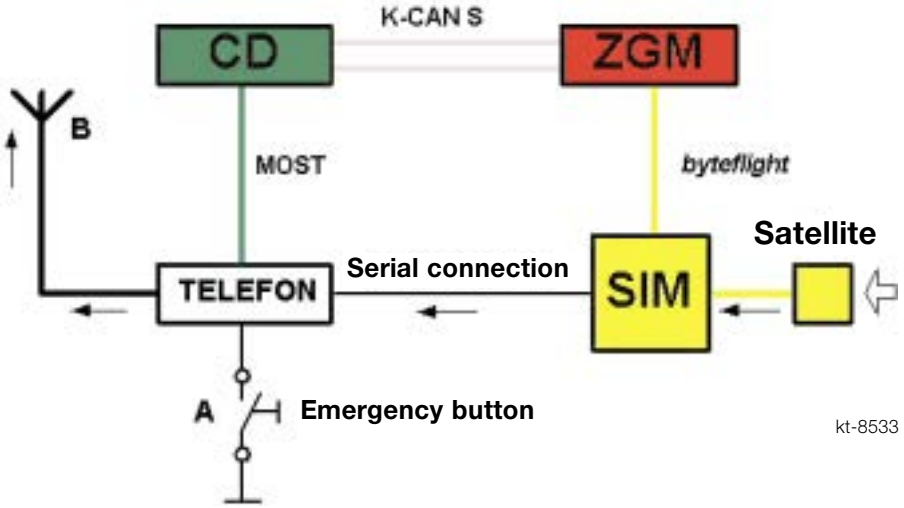

There is a direct, serial, single-wire connection between the SIM and telephone. If the connection is disrupted or fails, the overall bus system is used to trigger the emergency call.

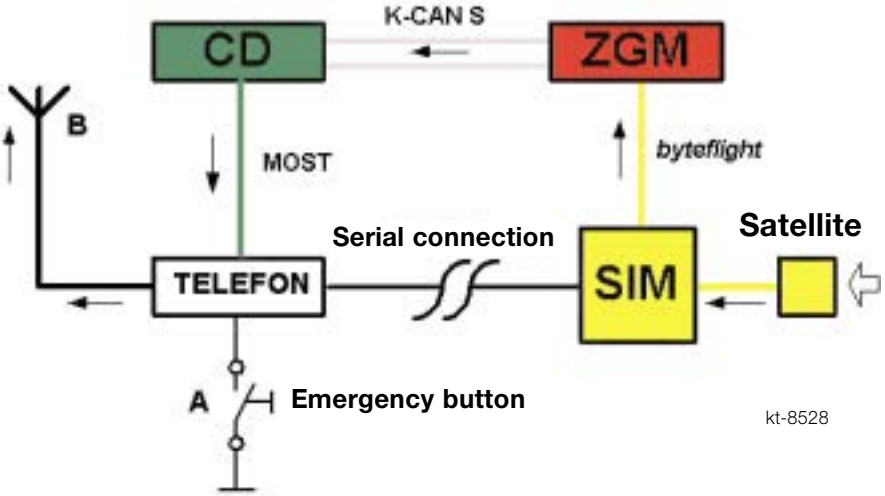

The telegram then goes from the SIM to the Central Gateway Module via the K-CAN to the Control Display and the MOST bus to the telephone. Once an emergency call has been triggered, it cannot be cancelled. To ensure that the emergency call has reached the provider, an acknowledgement is transmitted, and this is stored in the system. The service provider sets up a voice connection to the vehicle and receives confirmation of the emergency call. If no voice connection is set up or the occupants are unable to respond, the rescue services are notified automatically.

cardiagn.com

Manual Emergency Call

In the event of an emergency, the driver or passengers can press the emergency call button. The current vehicle position is then displayed in the Control Display along with a message indicating that the emergency call has been placed.

The service provider sets up a voice connection to the vehicle and receives confirmation of the emergency call. Once the voice connection to the provider has been set up, the green button display flashes. The rescue services are then notified and this is indicated on the Control Display.

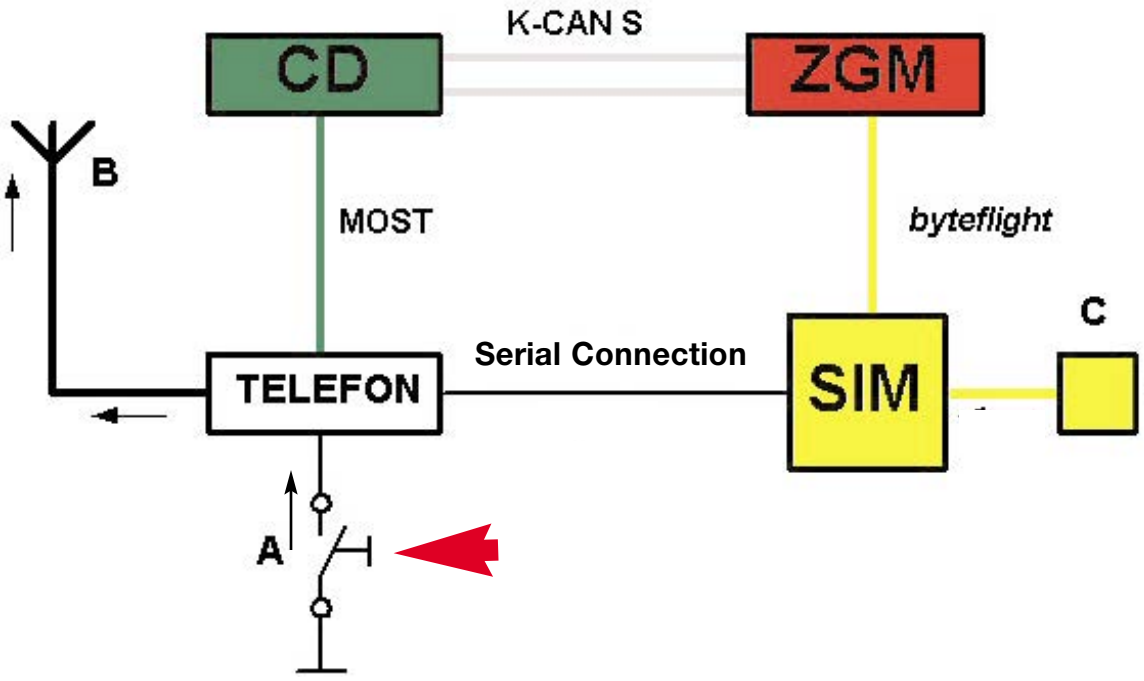

cardiagn.com

Airbag Warning Lights (AWL) and Check Control

The E65 has a variety of systems for the display of faults in the ISIS. These include warning lamps, Check Control graphic symbols and Check Control text messages displayed in the KOMBI and Control Display.

The warning lamps include the airbag warning lamp AWL and the "fasten seatbelt" lamp. The warning lamps illuminate in the LED warning light field of the KOMBI.

Seatbelt Warning Lamp

Airbag Warning Lamp (AWL)

kt-8118

The airbag warning lamp is activated in the pre-drive check and is switched on in the event of the following system faults:

- Fault in the self-diagnosis of the SIM.
- Communication fault in the *byteflight*.
- Fault during the pre-drive check.
- Vehicle identification number incorrect or missing.

The faults in the control unit or the satellites are transmitted to the SIM as a status telegram. These messages are transferred from the SIM via the *byteflight* to the Central Gateway Module (ZGM) and via the K-CAN-S to the KOMBI.

Activation of the airbag warning lamp AWL, the graphic symbols and the Check Control messages are controlled by the instrument cluster on the basis of the data received from the SIM.

If the functions in the overall system that are relevant to safety are operating correctly, the SIM transmits a message to the instrument cluster at regular intervals, approx. every 200 ms. If this signal fails for longer than 2 seconds, the KOMBI indicates this as a fault in the system by causing the airbag warning lamp to light up.

cardiagn.com

Check Control Messages

The graphic symbols appear in the information display field of the KOMBI. The following symbols are possible:

The red airbag symbol is activated when there is a fault in the driver or front passenger airbag.

The yellow airbag symbol is activated in the event of faults in the side airbags, the head airbags as well as the seatbelt tensioner or belt tension limiter.

The yellow service symbol is activated in the event of faults in the fuel pump circuit.

The following Check Control messages are for start of production E65:

Check Control Message displayed in KOMBI	Message displayed in Control Display	Cause
Front pass. restraint system fault!	"Front pass. restraint system fault!" Belt tensioner or belt force limiter fault. Continue to wear belts despite fault. Please contact the nearest BMW center	Fault in firing circuit of pass. belt tensioner or tension limiter.
Driver restraint system fault!	"Driver restraint system fault!" Belt tensioner or belt force limiter fault. Continue to wear belts despite fault. Please contact the nearest BMW center	Fault in firing circuit of driver belt tensioner or tension limiter.
Restraint system, left rear, fault!	"Restraint system left rear fault!" Belt tensioner fault. Continue to wear belts despite restraint system fault. Please contact the nearest BMW center	Fault in firing circuit of left rear belt tensioner.
Restraint system, right rear, fault!	"Restraint system right rear fault!" Belt tensioner fault. Continue to wear belts despite restraint system fault. Please contact the nearest BMW center	Fault in firing circuit of right rear belt tensioner.

cardiagn.com

Check Control Message displayed in KOMBI	Message displayed in Control Display	Cause
Restraint systems!	Fault in pass. restraint system affecting airbag, belt tensioner or belt force limiter. Cont. to wear belts despite fault. Please contact the nearest BMW center	Various faults in ISIS or missing Alive signal.
Left rear side airbag fault!	“Left rear side airbag fault” If possible, avoid transporting passengers in left rear seat. Please contact the nearest BMW center.	Failure in firing circuit of left rear side airbag.
Right rear side airbag fault!	“Right rear side airbag fault” If possible, avoid transporting passengers in right rear seat. Please contact the nearest BMW center.	Failure in firing circuit of right rear side airbag.
Driver airbags fault!	“Driver airbags fault” System fault affecting operation of the driver airbags. Please contact the nearest BMW center.	Failure in firing circuit of driver airbags (including knee airbag).
Front Passenger airbags fault!	“Front passenger airbags fault” If possible, avoid transporting passengers in the front seat. Please contact the nearest BMW center.	Failure in firing circuit of front passenger airbags (including knee airbag).
Fuel pump fault! Drive moderately	Fuel pump fault. This can lead to breakdown or reduction in engine output. Please contact the nearest BMW center.	Failure in fuel pump circuit.

cardiagn.com

Workshop Hints

Synchronization of New Modules

When new satellite modules are fitted, these modules have no system time. Transmission of the two system time telegrams allows the module to adopt the system time. This is only possible when the stored system time in the satellite modules is smaller that the time sent.

If the system time in a module is greater than the time sent, (trying a part from another vehicle), the system time is not adopted and an entry is made in the fault memory.

When the SIM or any satellite is replaced, the system time must be entered. As the system time is available in all ISIS modules, it can be transferred into the new module.

This takes place via the Diagnosis Program (Service Functions). To do so, the DISplus/MoDiC requests the system time from all satellites and selects the largest.

The DISplus/MoDiC adds an amount to this time and transmits the result into the new module as the system time. The correction amount compensates for the run time between reading from the satellites and entry in the new module.

This prevents fault messages from the satellites because the system time transferred by the new module is smaller than that stored in the satellites.

cardiagn.com

Review Questions

1. Why is it possible for the SIM to react faster than the previous MRS system?

2. Where does the power supply (B+) to the satellites originate from? What happens to the power supply (B+) if a fault is logged in one of the satellites?

3. Where is the system time for the ISIS system stored? What is this time used for?

4. What two signals must be received by a satellite before a pyrotechnic actuator (airbag, seatbelt tensioner etc.) can be deployed? How do these signals arrive to the satellite?

5. Which satellite is responsible for deploying the BST? What other actuators or devices does it control?

6. When an AKS is deployed what components must be replaced?

7. What function must be carried out when a new control module is fitted to the ISIS system?

cardiagn.com