AUTOMATIC TRANSMISSION

SECTION AT

CONTENTS

PRECAUTIONS 4
Supplemental Restraint System (SRS) "AIR BAG" 4
Precautions 4
Service Notice or Precautions 5
Wiring Diagrams and Trouble Diagnosis 6
PREPARATION 7
Special Service Tools 7
A/T FLUID 9
Checking A/T Fluid 9
Changing A/T Fluid 9
OVERALL SYSTEM 11
A/T Electrical Parts Location 11
Circuit Diagram 12
Cross-sectional View 13
Hydraulic Control Circuit 14
Shift Mechanism 15
Control System 24
Control Mechanism 25
Control Valve 30
ON BOARD DIAGNOSTIC SYSTEM DESCRIPTION 32
CONSULT-II 32
Diagnostic Procedure Without CONSULT-II 37
TROUBLE DIAGNOSIS - INTRODUCTION 42
Introduction 42
Work Flow 46
TROUBLE DIAGNOSIS - BASIC INSPECTION 48
A/T Fluid Check 48
Stall Test 48
Line Pressure Test 51
Road Test 52
TROUBLE DIAGNOSIS - GENERAL DESCRIPTION 70
Symptom Chart 70
TCM Terminals and Reference Value 82
TROUBLE DIAGNOSIS FOR POWER SUPPLY 86
Wiring Diagram - AT - MAIN 86
Diagnostic Procedure 87
TROUBLE DIAGNOSIS FOR VHCL SPEED SEN.A/T (REVOLUTION SENSOR) 89
Description 89
Wiring Diagram - AT - VSSA/T 91
Diagnostic Procedure 92
Component Inspection 93
TROUBLE DIAGNOSIS FOR VHCL SPEED SEN.MTR 95
Description 95
Wiring Diagram - AT - VSSMTR 96
Diagnostic Procedure 97
TROUBLE DIAGNOSIS FOR THROTTLE POSI SEN 98
Description 98
Wiring Diagram - AT - TPS 100
Diagnostic Procedure 101
Component Inspection 105
TROUBLE DIAGNOSIS FOR SHIFT SOLENOID/V A 106
Description 106
Wiring Diagram - AT - SSV/A 108
Diagnostic Procedure 109
Component Inspection 110
TROUBLE DIAGNOSIS FOR SHIFT SOLENOID/V B 111
Description 111
Wiring Diagram - AT - SSV/B 113
Diagnostic Procedure 114
Component Inspection 115
TROUBLE DIAGNOSIS FOR OVERRUN CLUTCH S/V 116
Description 116
Wiring Diagram - AT - OVRCSV 117
Diagnostic Procedure 118
Component Inspection 119
TROUBLE DIAGNOSIS FOR T/C CLUTCH SOL/V 120
Description 120
Wiring Diagram - AT - TCV 122
Diagnostic Procedure 123

CONTENTS (Cont'd)

Component Inspection....124
TROUBLE DIAGNOSIS FOR BATT/FLUID TEMP SEN....125
Description....125
Wiring Diagram - AT - BA/FTS....127
Diagnostic Procedure....128
Component Inspection....131
TROUBLE DIAGNOSIS FOR ENGINE SPEED SIG..132
Description....132
Wiring Diagram - AT - ENGSS....133
Diagnostic Procedure....134
TROUBLE DIAGNOSIS FOR LINE PRESSURE S/V....136
Description....136
Wiring Diagram - AT - LPSV....138
Diagnostic Procedure....139
Component Inspection....140
TROUBLE DIAGNOSIS FOR CONTROL UNIT (RAM), CONTROL UNIT (ROM)....142
Description....142
Diagnostic Procedure....143
TROUBLE DIAGNOSIS FOR CONTROL UNIT (EEPROM)....144
Description....144
Diagnostic Procedure....145
TROUBLE DIAGNOSES FOR SYMPTOMS....146
Wiring Diagram - AT - NONDTC....146
1. POWER Indicator Lamp Does Not Come On....149
2. POWER or SNOW Indicator Lamp Does Not Come On....150
3. O/D OFF Indicator Lamp Does Not Come On....151
4. POWER Indicator Lamp Does Not Come On....152
5. Engine Cannot Be Started In ″P″ and ″N″ Position....153
6. In ″P″ Position, Vehicle Moves Forward Or Backward When Pushed....154
7. In ″N″ Position, Vehicle Moves....155
8. Large Shock. ″N″ -> ″R″ Position....157
9. Vehicle Does Not Creep Backward In ″R″ Position....159
10. Vehicle Does Not Creep Forward In ″D″, ″2″ Or ″1″ Position....162
11. Vehicle Cannot Be Started From D_1....165
12. A/T Does Not Shift: D_1 -> D_2 Or Does Not Kickdown: D_4 -> D_2....168
13. A/T Does Not Shift: D_2 -> D_3....171
14. A/T Does Not Shift: D_3 -> D_4....174
15. A/T Does Not Perform Lock-up....177
16. A/T Does Not Hold Lock-up Condition....179
17. Lock-up Is Not Released....181
18. Engine Speed Does Not Return To Idle (Light Braking D_4 -> D_3)....182
19. Vehicle Does Not Start From D_1....184
20. A/T Does Not Shift: D_4 -> D_3, When Overdrive Control Switch ″ON″ -> ″OFF″....185
21. A/T Does Not Shift: D_3 -> 2_2, When Selector Lever ″D″ -> ″2″ Position....186
22. A/T Does Not Shift: 2_2 -> 1_1, When Selector Lever ″2″ -> ″1″ Position....187
23. Vehicle Does Not Decelerate By Engine Brake....188
24. TCM Self-diagnosis Does Not Activate (PNP, Overdrive Control, A/T Check and TP Switches Circuit Checks)....189
A/T SHIFT LOCK SYSTEM....198
Description....198
Wiring Diagram - SHIFT -....199
Diagnostic Procedure....200
Component Check....202
KEY INTERLOCK CABLE....203
Removal....203
Installation....203
SHIFT CONTROL SYSTEM....204
Control Device....204
ON-VEHICLE SERVICE....205
Control Valve Assembly and Accumulators....205
Revolution Sensor Replacement....205
Rear Oil Seal Replacement....206
Parking Pawl Components Inspection....206
Park/Neutral Position Switch Adjustment....206
Manual Control Linkage Adjustment....207
REMOVAL AND INSTALLATION....208
Removal....208
Installation....209
OVERHAUL....211
Components....211
Oil Channel....213
Locations of Needle Bearings, Thrust Washers and Snap Rings....214
DISASSEMBLY....215
REPAIR FOR COMPONENT PARTS....226
Oil Pump....226
Control Valve Assembly....230
Control Valve Upper Body....236
Control Valve Lower Body....241
Reverse Clutch....243
High Clutch....246
Forward and Overrun Clutches....249
Low & Reverse Brake....253
Forward Clutch Drum Assembly....257
Rear Internal Gear and Forward Clutch Hub....259
Band Servo Piston Assembly....262
Parking Pawl Components....266
ASSEMBLY....268

CONTENTS (Cont'd)

Assembly (1) 268
Adjustment 276
Assembly (2) 279
A/T FLUID COOLER SYSTEM 286
A/T Fluid Cooler 286
SERVICE DATA AND SPECIFICATIONS (SDS) 288
General Specifications 288
Shift Schedule 288
Stall Revolution 288
Line Pressure 288
Return Springs 289
Accumulator O-ring 290
Clutches and Brakes 290
Oil Pump and Low One-way Clutch 292
Total End Play 292
Reverse Clutch Drum End Play 293
Removal and Installation 293

Supplemental Restraint System (SRS) "AIR BAG"

NMAT0253

The Supplemental Restraint System such as "AIR BAG" used along with a seat belt, helps to reduce the risk or severity of injury to the driver and front passenger for certain types of collision. The SRS system composition which is available to NISSAN MODEL S15 is as follows:

The Supplemental Restraint System consists of driver air bag module (located in the center of the steering wheel), front passenger air bag module (located on the instrument panel on passenger side), a diagnosis sensor unit, warning lamp, wiring harness and spiral cable.

Information necessary to service the system safely is included in the **RS section** of this Service Manual.

WARNING:

- **To avoid rendering the SRS inoperative, which could increase the risk of personal injury or death in the event of a collision which would result in air bag inflation, all maintenance should be performed by an authorized NISSAN dealer.**
- **Improper maintenance, including incorrect removal and installation of the SRS, can lead to personal injury caused by unintentional activation of the system. For removal of Spiral Cable and Air Bag Module, see the RS section.**
- **Do not use electrical test equipment on any circuit related to the SRS unless instructed to in this Service Manual. SRS wiring harnesses can be identified with yellow harness connector.**

Precautions

NMAT0003

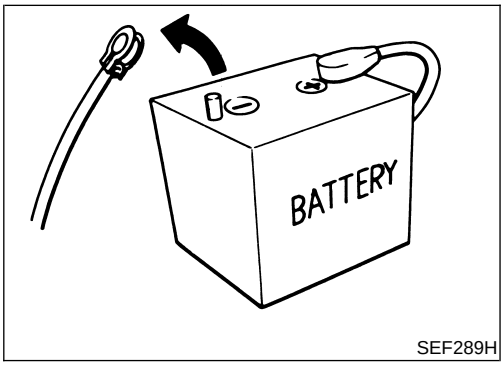

SEF289H

- **Before connecting or disconnecting the TCM harness connector, turn ignition switch "OFF" and disconnect negative battery terminal. Failure to do so may damage the TCM. Because battery voltage is applied to TCM even if ignition switch is turned "OFF".**

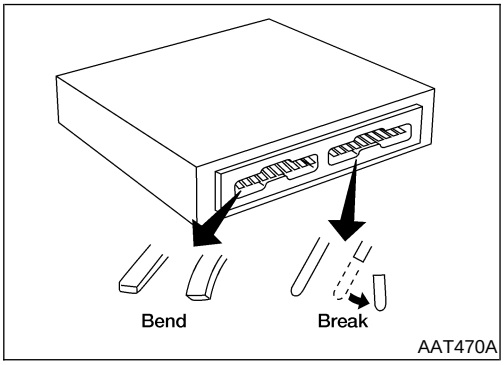

AAT470A

- **When connecting or disconnecting pin connectors into or from TCM, take care not to damage pin terminals (bend or break).**
  Make sure that there are not any bends or breaks on TCM pin terminal, when connecting pin connectors.

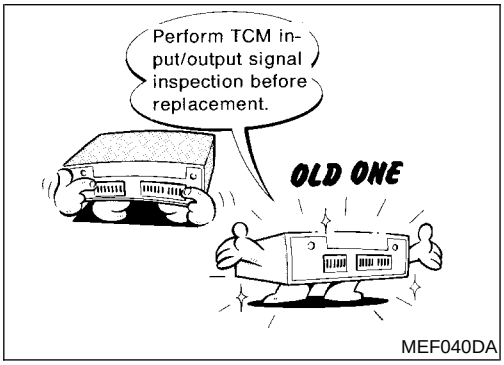

MEF040DA

- **Before replacing TCM, perform TCM input/output signal inspection and make sure whether TCM functions properly or not. (Refer to AT-82.)**

- Before proceeding with disassembly, thoroughly clean the outside of the transmission. It is important to prevent the internal parts from becoming contaminated by dirt or other foreign matter.
- Disassembly should be done in a clean work area.
- Use lint-free cloth or towels for wiping parts clean. Common shop rags can leave fibers that could interfere with the operation of the transmission.
- Place disassembled parts in order for easier and proper assembly.
- All parts should be carefully cleaned with a general purpose, non-flammable solvent before inspection or reassembly.
- Gaskets, seals and O-rings should be replaced any time the transmission is disassembled.
- It is very important to perform functional tests whenever they are indicated.
- The valve body contains precision parts and requires extreme care when parts are removed and serviced. Place disassembled valve body parts in order for easier and proper assembly. Care will also prevent springs and small parts from becoming scattered or lost.
- Properly installed valves, sleeves, plugs, etc. will slide along bores in valve body under their own weight.
- Before assembly, apply a coat of recommended ATF to all parts. Apply petroleum jelly to protect O-rings and seals, or hold bearings and washers in place during assembly. Do not use grease.
- Extreme care should be taken to avoid damage to O-rings, seals and gaskets when assembling.
- After overhaul, refill the transmission with new ATF.
- When the A/T drain plug is removed, only some of the fluid is drained. Old A/T fluid will remain in torque converter and ATF cooling system.
  Always follow the procedures when changing A/T fluid. Refer to "Changing A/T Fluid", AT-9.

Service Notice or Precautions

NMAT0004

FAIL-SAFE

NMAT0004S01

The TCM has an electronic Fail-Safe (limp home mode). This allows the vehicle to be driven even if a major electrical input/output device circuit is damaged.
Under Fail-Safe, the vehicle always runs in third gear, even with a shift lever position of "1", "2" or "D". The customer may complain of sluggish or poor acceleration.
When the ignition key is turned "ON" following Fail-Safe operation, POWER indicator lamp blinks for about 8 seconds. [For "SELF-DIAGNOSTIC PROCEDURE (Without CONSULT-II)", refer to AT-37.]
The blinking of the POWER indicator lamp for about 8 seconds will appear only once and be cleared. The customer may resume normal driving conditions.
Always follow the "WORK FLOW" (Refer to AT-46).

The SELF-DIAGNOSIS results will be as follows:
The first SELF-DIAGNOSIS will indicate damage to the vehicle speed sensor or the revolution sensor.
During the next SELF-DIAGNOSIS, performed after checking the sensor, no damages will be indicated.

TORQUE CONVERTER SERVICE

NMAT0004S04

The torque converter should be replaced under any of the following conditions:

- External leaks in the hub weld area.
- Converter hub is scored or damaged.
- Converter pilot is broken, damaged or fits poorly into crankshaft.
- Steel particles are found after flushing the cooler and cooler lines.
- Pump is damaged or steel particles are found in the converter.
- Vehicle has TCC shudder and/or no TCC apply. Replace only after all hydraulic and electrical diagnoses have been made. (Converter clutch material may be glazed.)
- Converter is contaminated with engine coolant containing antifreeze.
- Internal failure of stator roller clutch.
- Heavy clutch debris due to overheating (blue converter).
- Steel particles or clutch lining material found in fluid filter or on magnet when no internal parts in unit are worn or damaged — indicates that lining material came from converter.

The torque converter should not be replaced if:

- The fluid has an odor, is discolored, and there is no evidence of metal or clutch facing particles.
- The threads in one or more of the converter bolt holes are damaged.
- Transmission failure did not display evidence of damaged or worn internal parts, steel particles or clutch plate lining material in unit and inside the fluid filter.
- Vehicle has been exposed to high mileage (only). The exception may be where the torque converter clutch dampener plate lining has seen excess wear by vehicles operated in heavy and/or constant traffic, such as taxi, delivery or police use.

Wiring Diagrams and Trouble Diagnosis

NMAT0005

When you read wiring diagrams, refer to the followings:

- GI-30, "HOW TO FOLLOW TROUBLE DIAGNOSES".
- EL-7, "POWER SUPPLY ROUTING" for power distribution circuit.

When you perform trouble diagnosis, refer to the followings:

- GI-31, "HOW TO FOLLOW TEST GROUPS IN TROUBLE DIAGNOSES".
- GI-20, "HOW TO PERFORM EFFICIENT DIAGNOSIS FOR AN ELECTRICAL INCIDENT".

Special Service Tools

NMAT0006

Tool number Tool name	Description	
ST2505S001 Oil pressure gauge set 1 ST25051001 Oil pressure gauge 2 ST25052000 Hose 3 ST25053000 Joint pipe 4 ST25054000 Adapter 5 ST25055000 Adapter	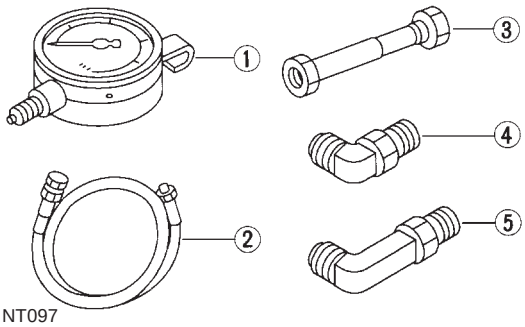 NT097	Measuring line pressure
ST07870000 Transmission case stand	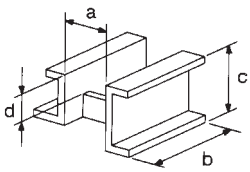 NT421	Disassembling and assembling A/T **a: 182 mm (7.17 in)** **b: 282 mm (11.10 in)** **c: 230 mm (9.06 in)** **d: 100 mm (3.94 in)**
KV31102100 Torque converter one-way clutch check tool	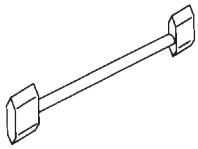 NT098	Checking one-way clutch in torque converter
ST25850000 Sliding hammer	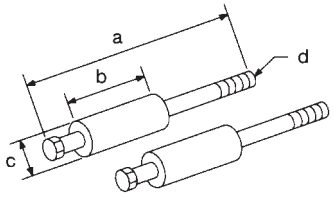 NT422	Removing oil pump assembly **a: 179 mm (7.05 in)** **b: 70 mm (2.76 in)** **c: 40 mm (1.57 in) dia.** **d: M12 x 1.75P**
KV31102400 Clutch spring compressor	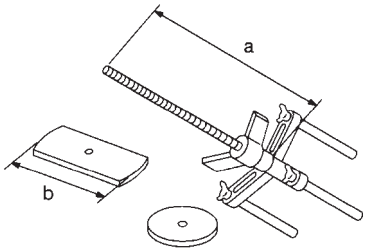 NT423	Removing and installing clutch return springs **a: 320 mm (12.60 in)** **b: 174 mm (6.85 in)**
KV381054S0 (ST33290001) Puller	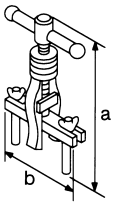 NT414	Removing rear oil seal **a: 250 mm (9.84 in)** **b: 160 mm (6.30 in)**

Special Service Tools (Cont'd)

Tool number Tool name	Description	
ST33200000 Drift	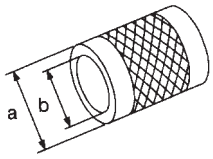 NT091	Installing oil pump housing oil seal Installing rear oil seal **a: 60 mm (2.36 in) dia.** **b: 44.5 mm (1.752 in) dia.**

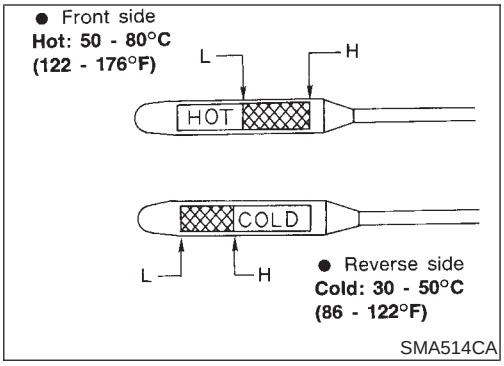

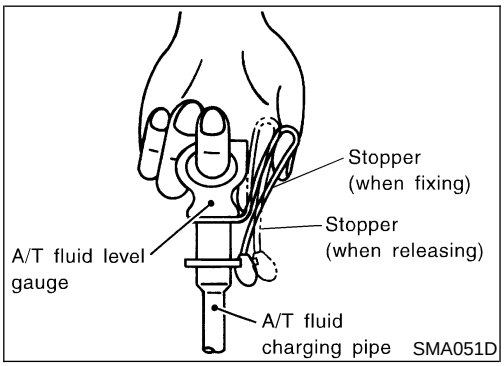

Checking A/T Fluid

NMAT0254

1. Warm up engine.
2. Check for fluid leakage.
3. Before driving, fluid level can be checked at fluid temperatures of 30 to 50°C (86 to 122°F) using “COLD” range on A/T fluid level gauge.

a. Park vehicle on level surface and set parking brake.
b. Start engine and move selector lever through each gear position. Leave selector lever in “P” position.
c. Check fluid level with engine idling.
d. Remove A/T fluid level gauge and note reading. If level is at low side of either range, and fluid to the charging pipe.
e. Re-insert A/T fluid level gauge into charging pipe as far as it will go.
f. Remove A/T fluid level gauge and note reading. If reading is at low side of range, add fluid to the charging pipe.

Do not overfill.

4. Drive vehicle for approximately 5 minutes in urban areas.
5. Re-check fluid level at fluid temperatures of 50 to 80°C (122 to 176°F) using “HOT” range on A/T fluid level gauge.

CAUTION:

Firmly fix the A/T fluid level gauge to the fluid charging pipe using a stopper attached.

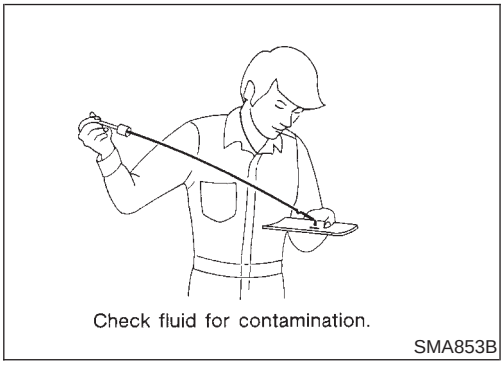

6. Check fluid condition.

- If fluid is very dark or smells burned, refer to AT section for checking operation of A/T. Flush cooling system after repair of A/T.
- If A/T fluid contains frictional material (clutches, bands, etc.), replace radiator and flush cooler line using cleaning solvent and compressed air after repair of A/T. Refer to LC-14, “Components”.

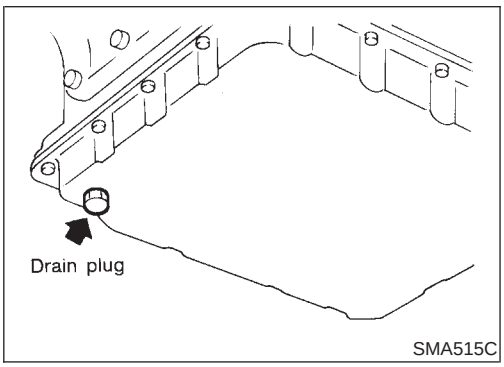

Changing A/T Fluid

NMAT0255

1. Warm up A/T fluid.
2. Stop engine.
3. Drain A/T fluid from drain plug and refill with new A/T fluid. Always refill same volume with drained fluid.

Fluid grade:

Genuine Nissan ATF or equivalent. Refer to MA-8, “Fluids and Lubricants”.

Fluid capacity (With torque converter):

7.9 ℓ (7 Imp qt)

Drain plug:

: 29 - 39 N·m (3.0 - 4.0 kg-m, 22 - 29 ft-lb)

4. Run engine at idle speed for five minutes.
5. Check fluid level and condition. Refer to "Checking A/T Fluid", AT-9. If fluid is still dirty, repeat steps 2 through 5.

A/T Electrical Parts Location

NMAT0007

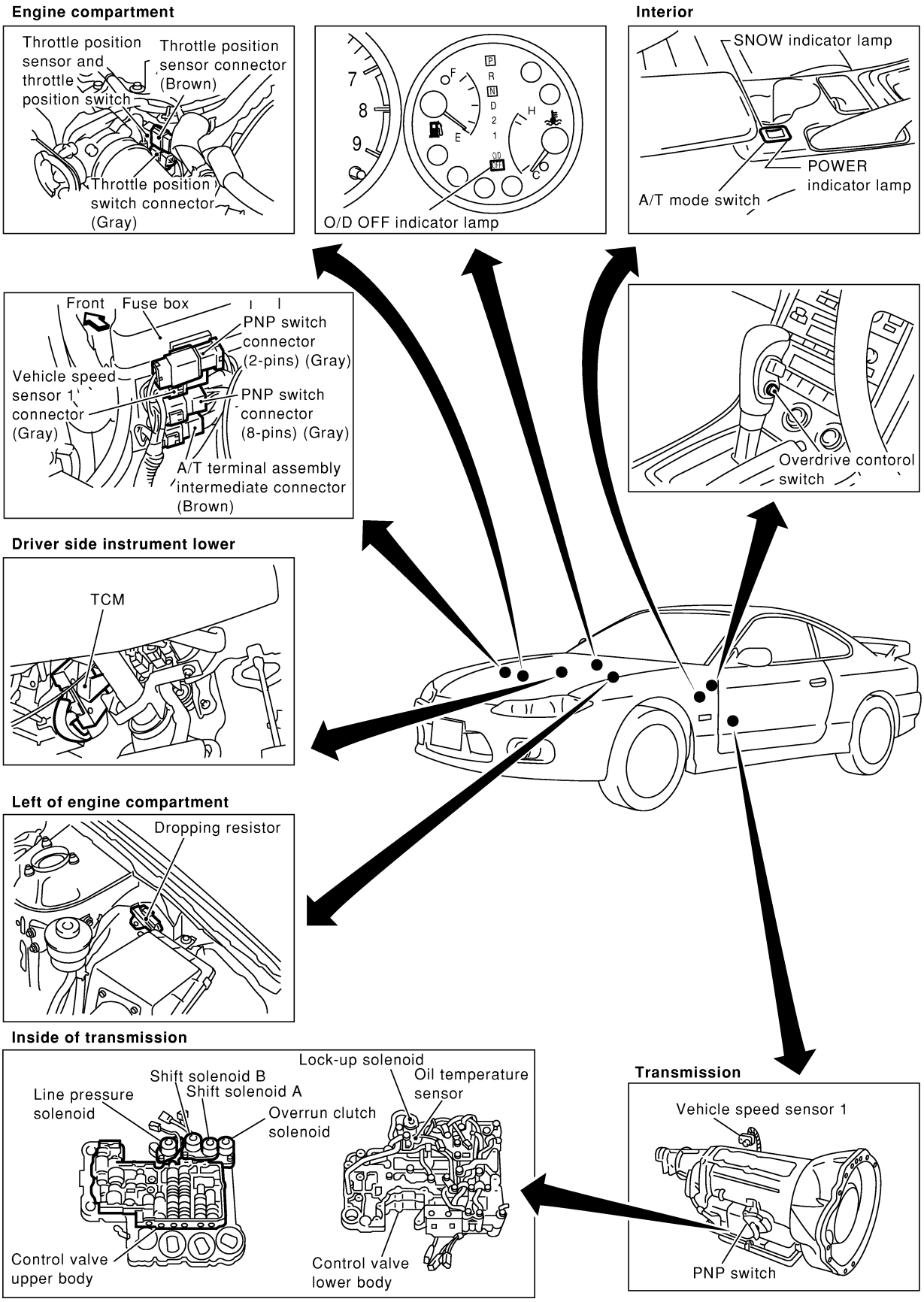

SAT405K

Circuit Diagram

NMAT0008

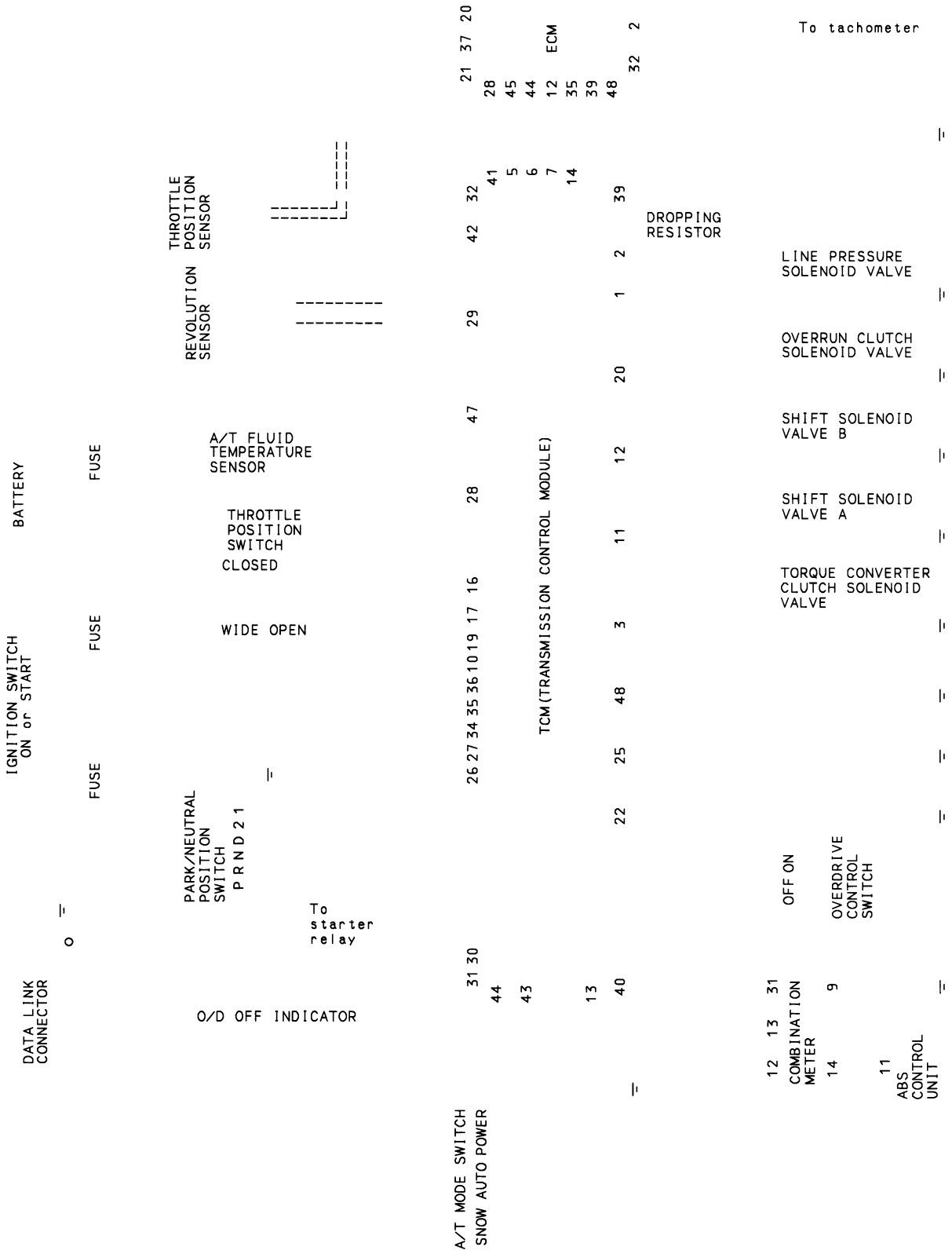

TAT253

Cross-sectional View

NMAT0010

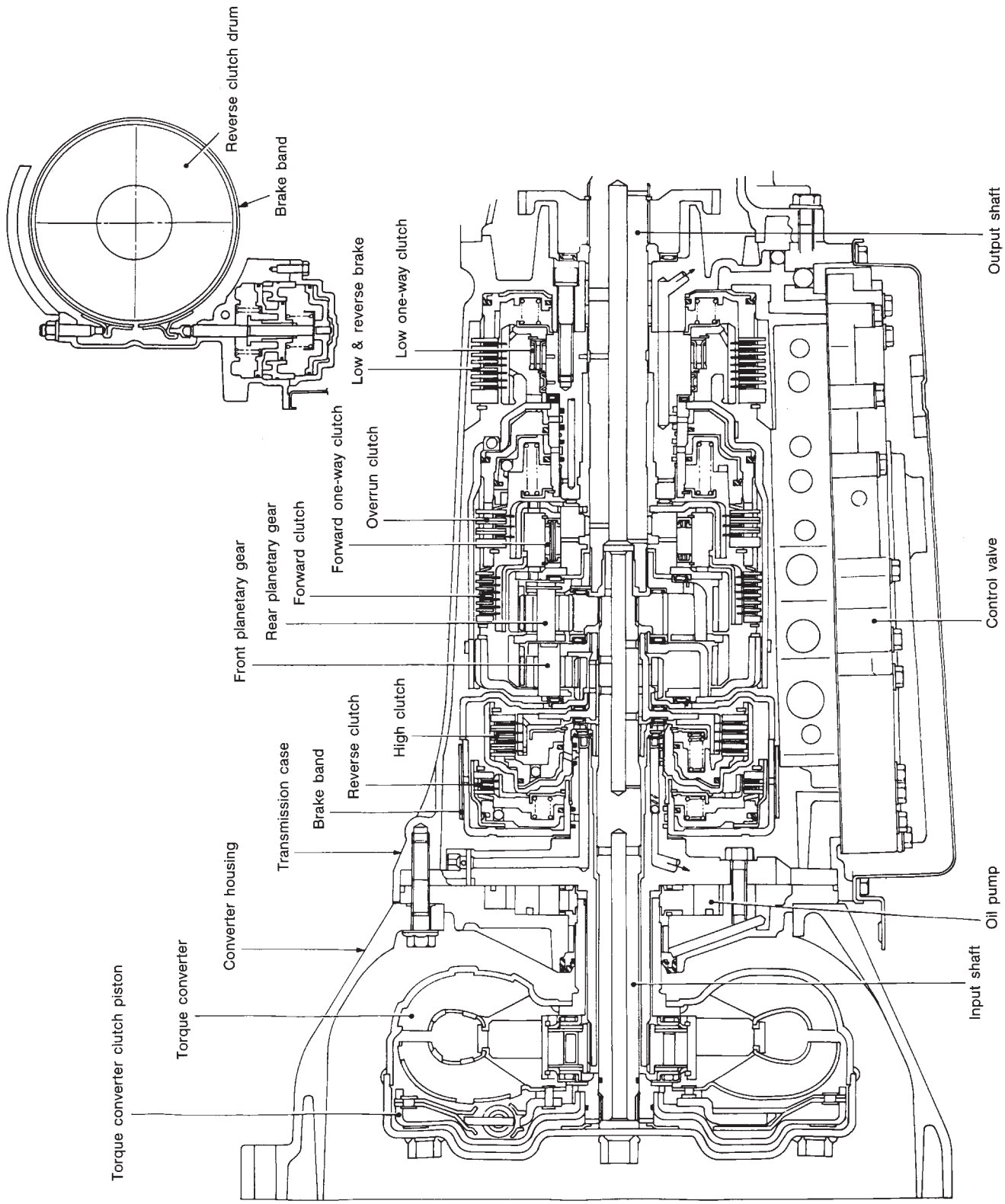

SAT125BA

Hydraulic Control Circuit

NMAT0011

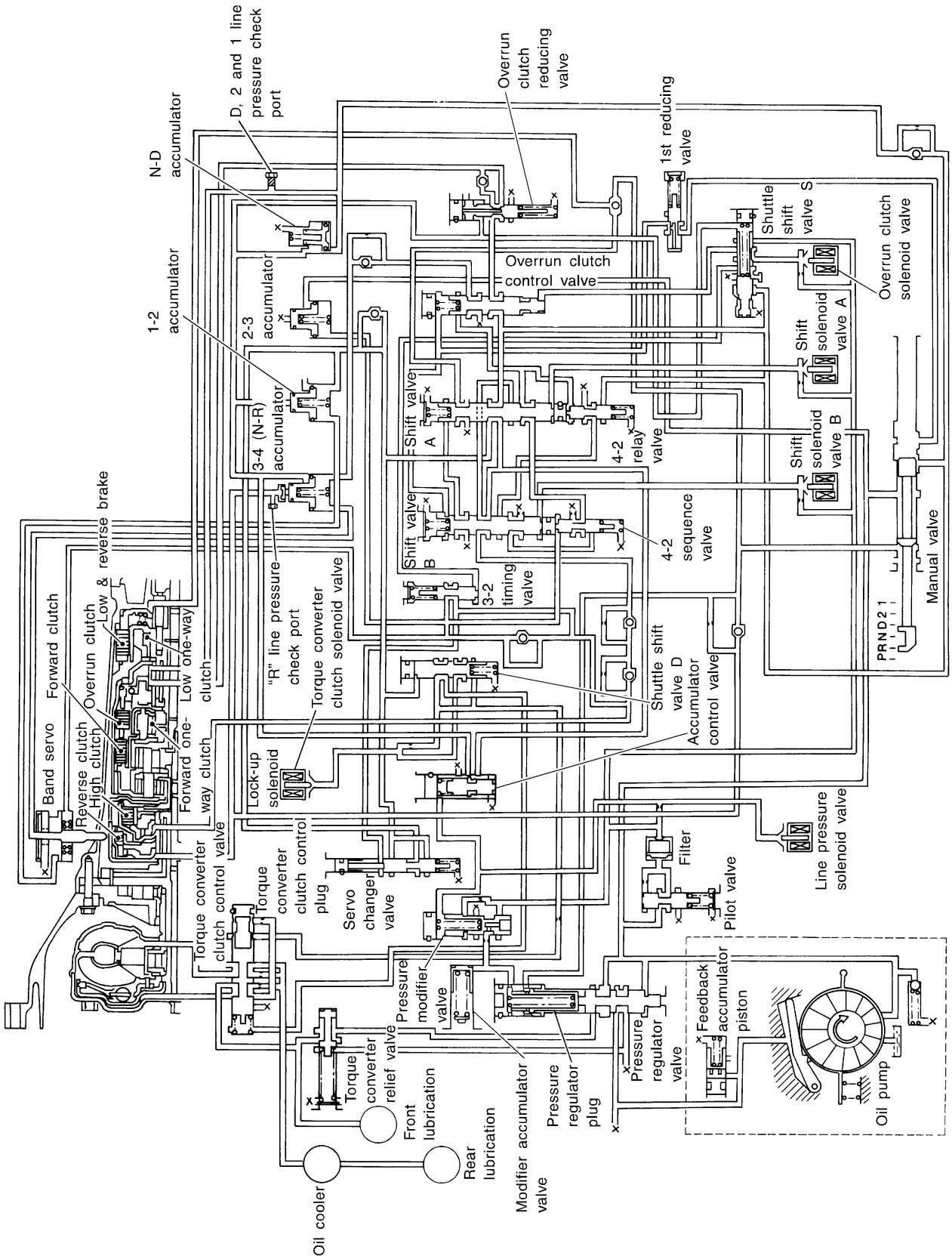

SAT151K

Shift Mechanism

NMAT0012

The automatic transmission uses compact, dual planetary gear systems to improve power-transmission efficiency, simplify construction and reduce weight.
It also employs an optimum shift control and superwide gear ratios. They improve starting performance and acceleration during medium and high-speed operation.
Two one-way clutches are also employed: one is used for the forward clutch and the other for the low clutch. These one-way clutches, combined with four accumulators, reduce shifting shock to a minimum.

CONSTRUCTION

NMAT0012S01

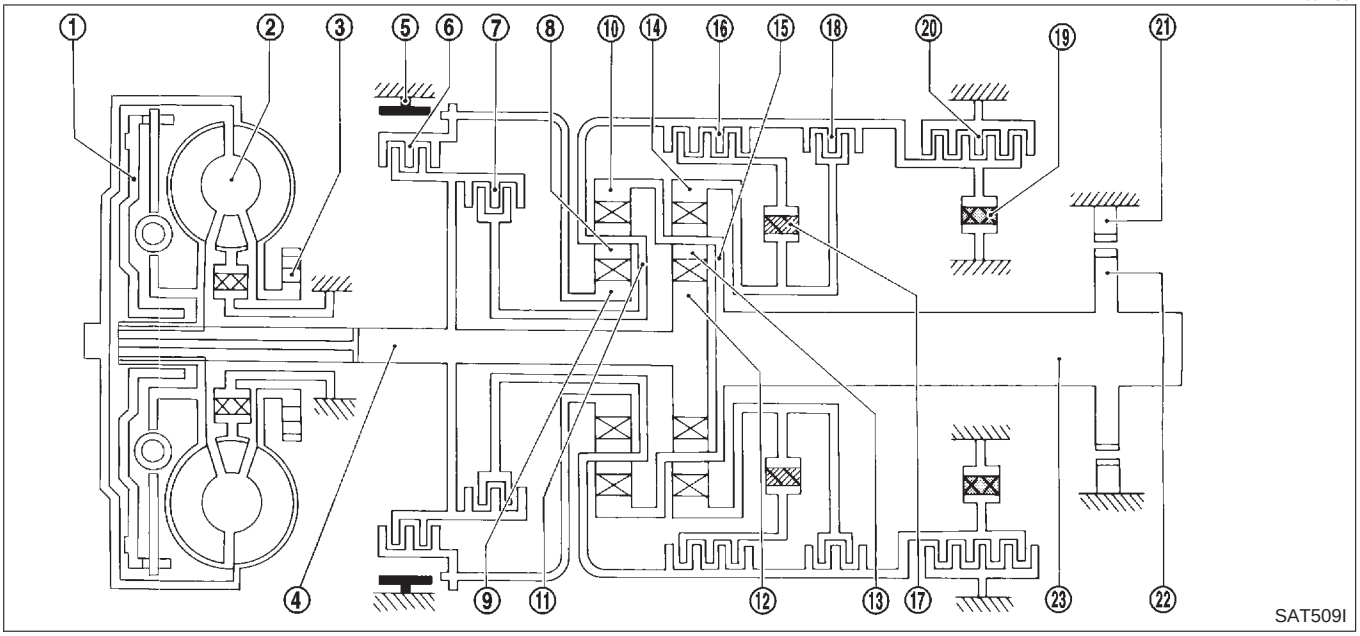

1. Torque converter clutch piston
2. Torque converter
3. Oil pump
4. Input shaft
5. Brake band
6. Reverse clutch
7. High clutch
8. Front pinion gear
9. Front sun gear
10. Front internal gear
11. Front planetary carrier
12. Rear sun gear
13. Rear pinion gear
14. Rear internal gear
15. Rear planetary carrier
16. Forward clutch
17. Forward one-way clutch
18. Overrun clutch
19. Low one-way clutch
20. Low & reverse brake
21. Parking pawl
22. Parking gear
23. Output shaft

FUNCTION OF CLUTCH AND BRAKE

NMAT0012S02

Clutch and brake components	Abbr.	Function
Reverse clutch **6**	R/C	To transmit input power to front sun gear **9**.
High clutch **7**	H/C	To transmit input power to front planetary carrier **11**.
Forward clutch **16**	F/C	To connect front planetary carrier **11** with forward one-way clutch **17**.
Overrun clutch **18**	O/C	To connect front planetary carrier **11** with rear internal gear **14**.
Brake band **5**	B/B	To lock front sun gear **9**.
Forward one-way clutch **17**	F/O.C	When forward clutch **16** is engaged, to stop rear internal gear **14** from rotating in opposite direction against engine revolution.
Low one-way clutch **19**	L/O.C	To stop front planetary carrier **11** from rotating in opposite direction against engine revolution.
Low & reverse brake **20**	L & R/B	To lock front planetary carrier **11**.

CLUTCH AND BAND CHART

NMAT0012S03

Shift position		Reverse clutch	High clutch	For-ward clutch	Over-run clutch	Band servo			For-ward one -way clutch	Low one-way clutch	Low & reverse brake	Lock-up	Remarks
						2nd apply	3rd release	4th apply					
P													PARK POSITION
R		◯									◯		REVERSE POSITION
N													NEUTRAL POSITION
D*4	1st			◯	*1D				B	B			Automatic shift 1 ⇔ 2 ⇔ 3 ⇔ 4
	2nd			◯	*1A	◯			B				
	3rd		◯	◯	*1A	*2C	C		B			*5 ◯	
	4th		◯	C		*3C	C	◯				◯	
2	1st			◯	D				B	B			Automatic shift 1 ⇔ 2
	2nd			◯	A	◯			B				
1	1st			◯	◯				B		◯		Locks (held stationary) in 1st speed 1 ⇐ 2
	2nd			◯	◯	◯			B				

*1: Operates when overdrive control switch is being set in "OFF" position.

*2: Oil pressure is applied to both 2nd "apply" side and 3rd "release" side of band servo piston. However, brake band does not contract because oil pressure area on the "release" side is greater than that on the "apply" side.

*3: Oil pressure is applied to 4th "apply" side in condition *2 above, and brake band contracts.

*4: A/T will not shift to 4th when overdrive control switch is set in "OFF" position.

*5: Operates when overdrive control switch is "OFF".

◯ : Operates.

A: Operates when throttle opening is less than 3/16, activating engine brake.

B: Operates during "progressive" acceleration.

C: Operates but does not affect power transmission.

D: Operates when throttle opening is less than 3/16, but does not affect engine brake.

POWER TRANSMISSION

=NMAT0012S04

"N" and "P" Positions

NMAT0012S0401

- "N" position
  No control members operate. Power from the input shaft is not transmitted to the output shaft since the clutch does not operate.
- "P" position
  Similar to the "N" position, no control members operate. The parking pawl interconnected with the select lever engages with the parking gear to mechanically hold the output shaft so that the power train is locked.

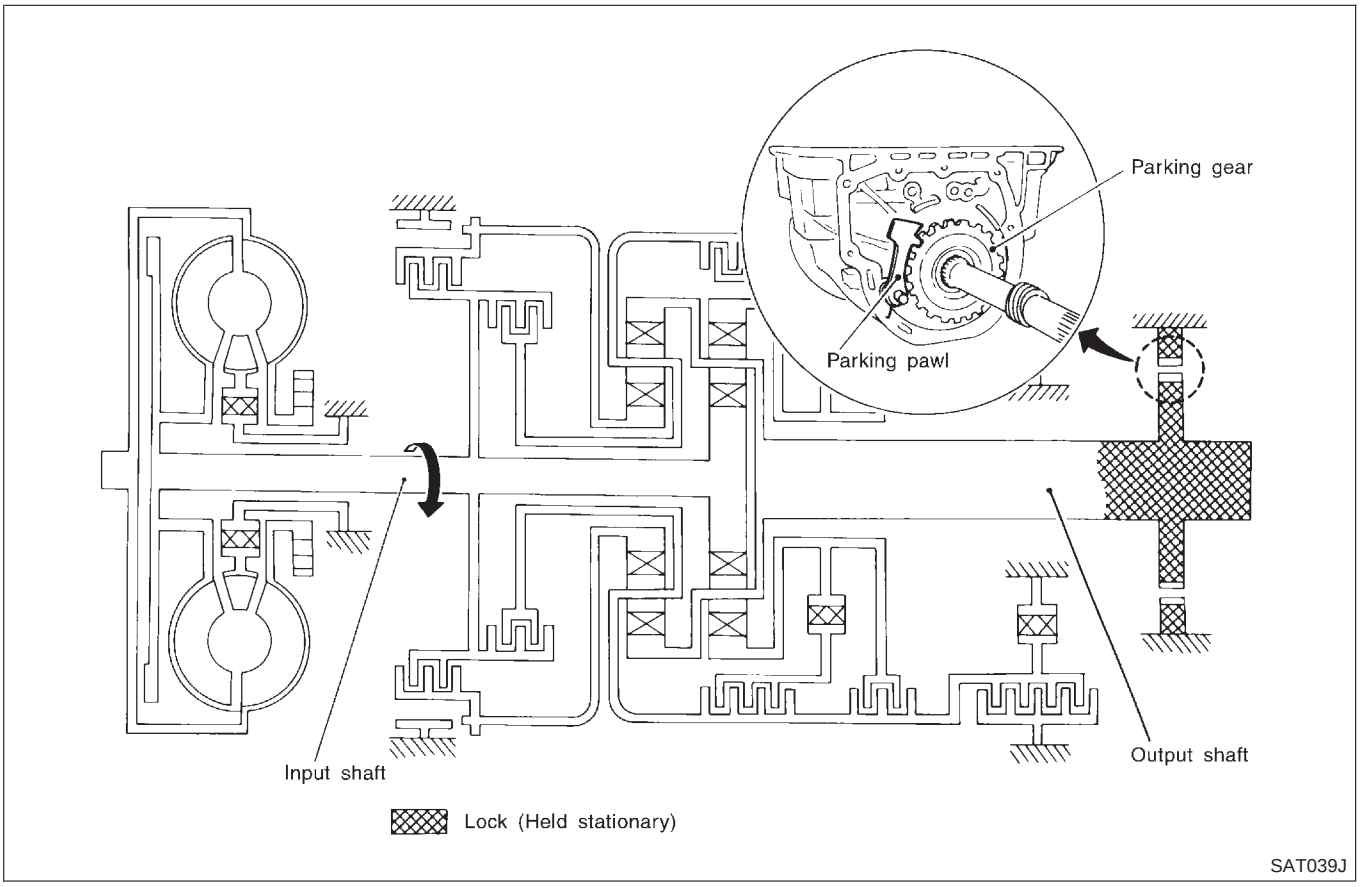

"1_1" Position

=NMAT0012S0406

Forward clutch **Forward one-way clutch** **Overrun clutch** **Low and reverse brake**	As overrun clutch engages, rear internal gear is locked by the operation of low and reverse brake. This is different from that of D_1 and 2_1.
Engine brake	Overrun clutch always engages, therefore engine brake can be obtained when decelerating.

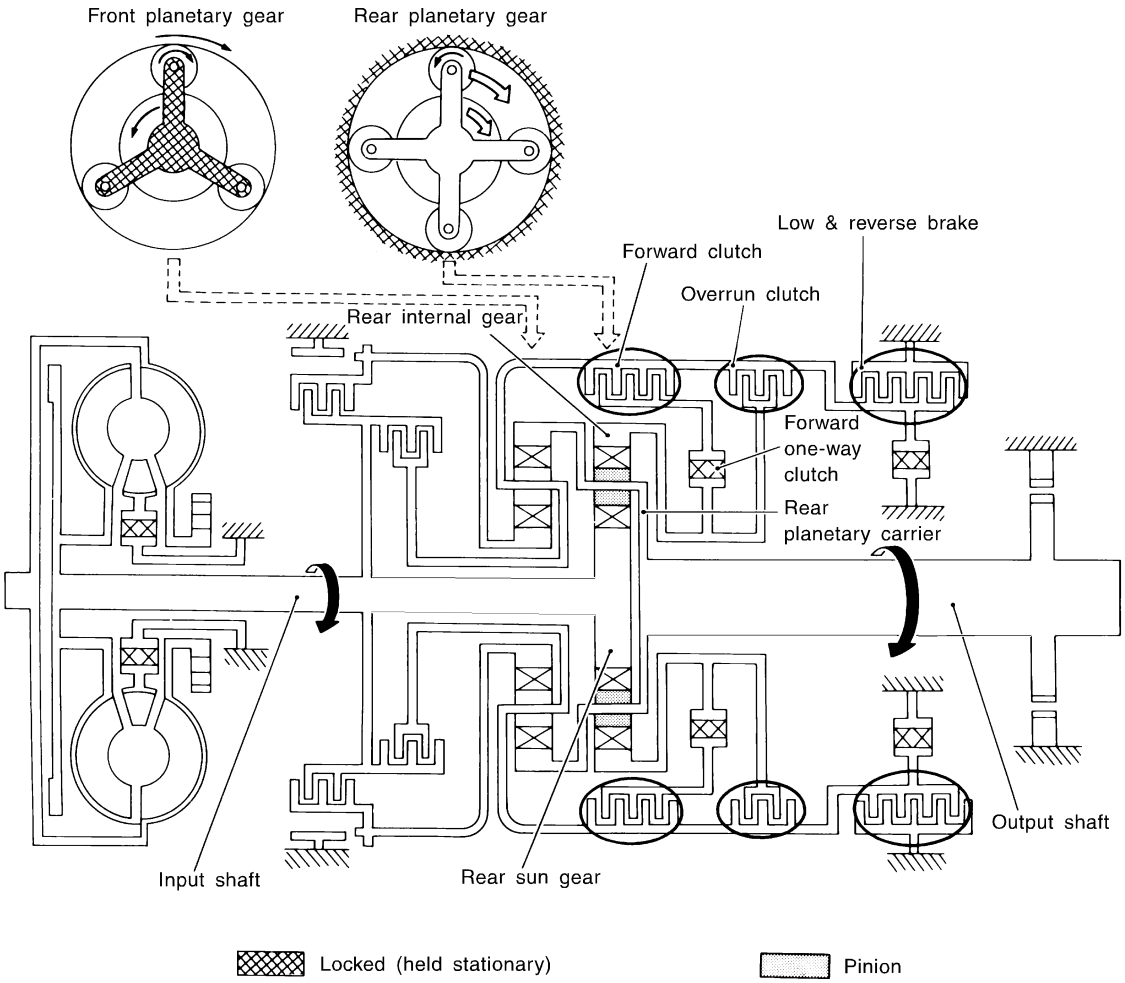

Power flow

Input shaft
⇩
Rear sun gear
⇩
Rear planetary gear ⇨ Output shaft

SAT100J

"D_1" and "2_1" Positions

=NMAT0012S0402

Forward one-way clutch **Forward clutch** **Low one-way clutch**	Rear internal gear is locked to rotate counterclockwise because of the functioning of these three clutches. (Start-up at D_1)
Overrun clutch engagement conditions (Engine brake)	D_1: Overdrive control switch in "OFF" Throttle opening less than 3/16 2_1: Throttle opening less than 3/16 At D_1 and 2_1 positions, engine brake is not activated due to free turning of low one-way clutch.

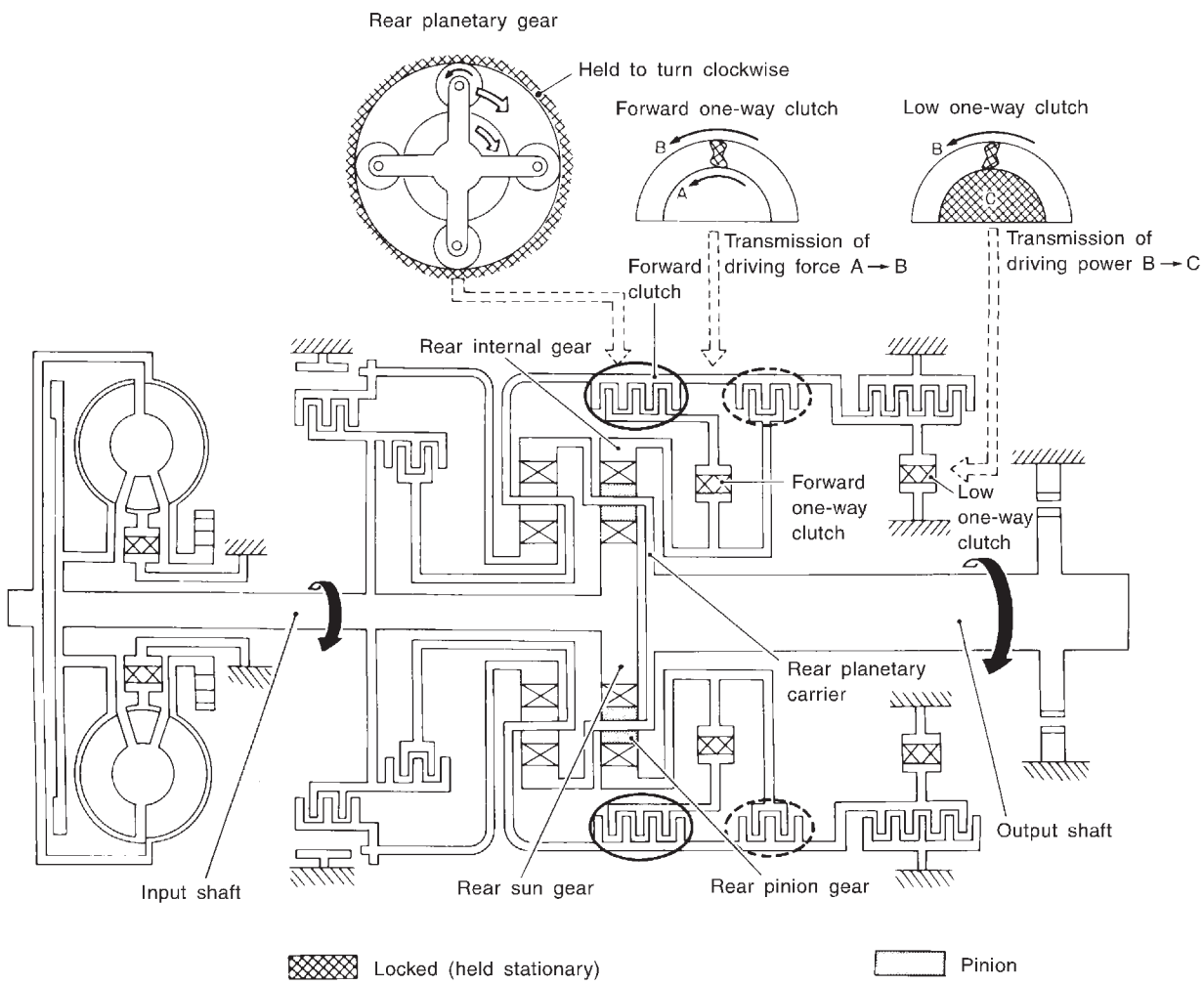

Power flow

Input shaft
⇩
Rear sun gear
⇩
Rear pinion gear
⇩
Rear planetary carrier → Output shaft

SAT096J

"D_2", "2_2" and "1_2" Positions

=NMAT0012S0403

Forward clutch **Forward one-way clutch** **Brake band**	Rear sun gear drives rear planetary carrier and combined front internal gear. Front internal gear now rotates around front sun gear accompanying front planetary carrier. As front planetary carrier transfers the power to rear internal gear through forward clutch and forward one-way clutch, this rotation of rear internal gear increases the speed of rear planetary carrier compared with that of the 1st speed.
Overrun clutch engagement conditions	D_2: Overdrive control switch in "OFF" Throttle opening less than 3/16 2_2: Throttle opening less than 3/16 1_2: Always engaged

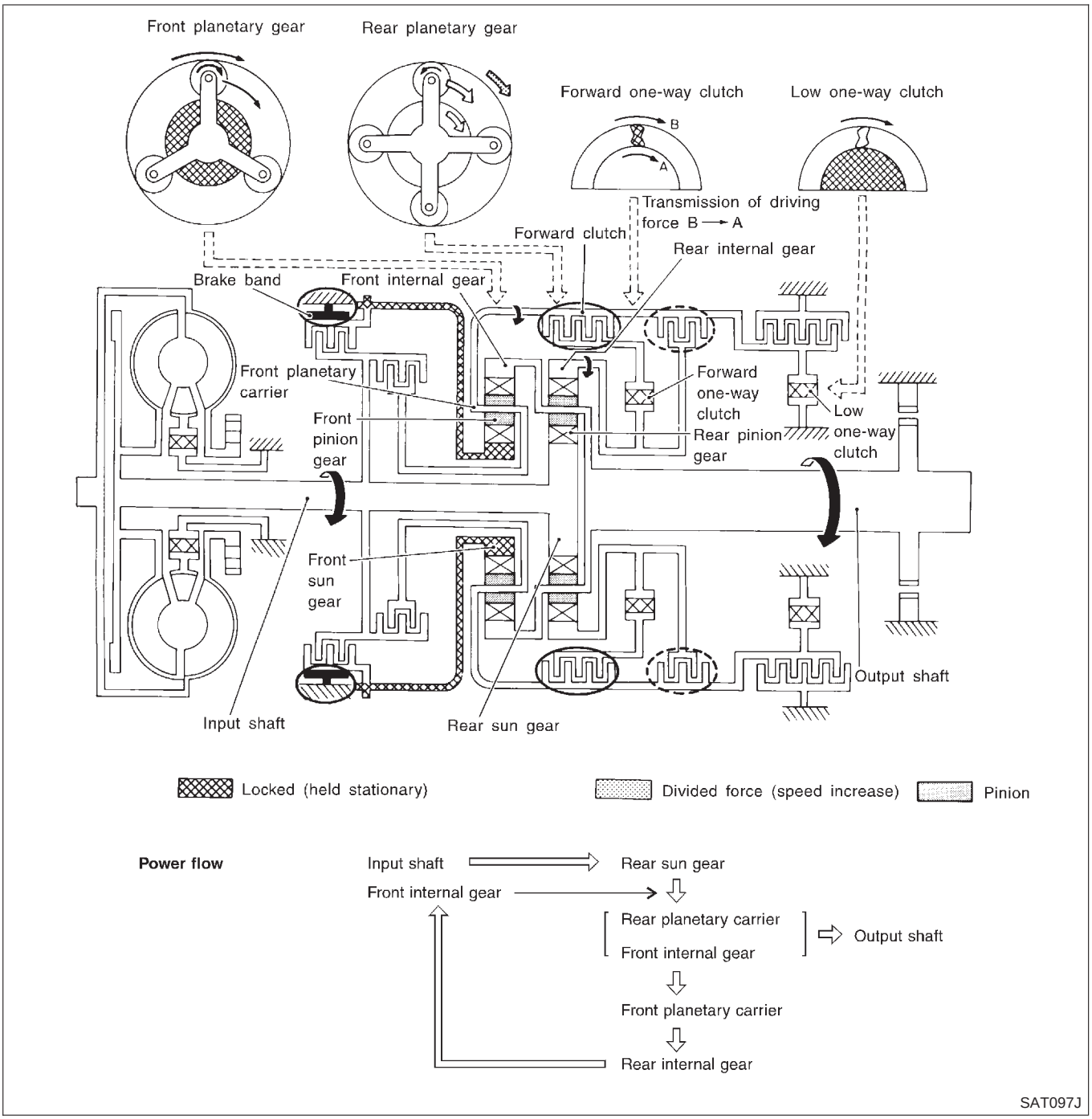

"D_3" Position

=NMAT0012S0404

High clutch **Forward clutch** **Forward one-way clutch**	Input power is transmitted to front planetary carrier through high clutch. And front planetary carrier is connected to rear internal gear by operation of forward clutch and forward one-way clutch. This rear internal gear rotation and another input (the rear sun gear) accompany rear planetary carrier to turn at the same speed.
Overrun clutch engagement conditions	D_3: Overdrive control switch in "OFF" Throttle opening less than 3/16

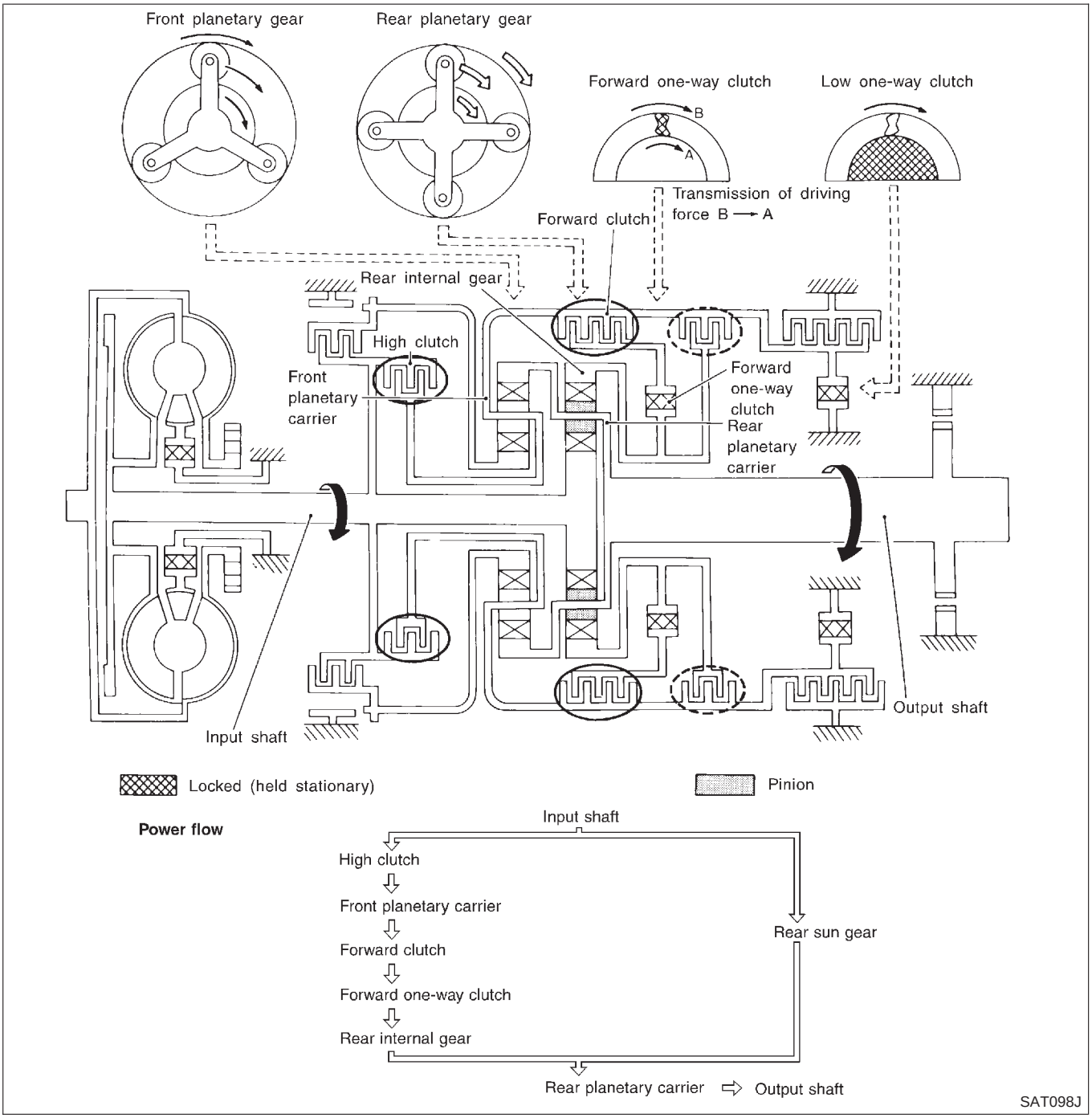

"D_4" (OD) Position

=NMAT0012S0405

High clutch **Brake band** **Forward clutch** (Does not affect power transmission)	Input power is transmitted to front carrier through high clutch. This front planetary carrier turns around the sun gear which is fixed by brake band and makes front internal gear (output) turn faster.
Engine brake	At D_4 position, there is no one-way clutch in the power transmission line and engine brake can be obtained when decelerating.

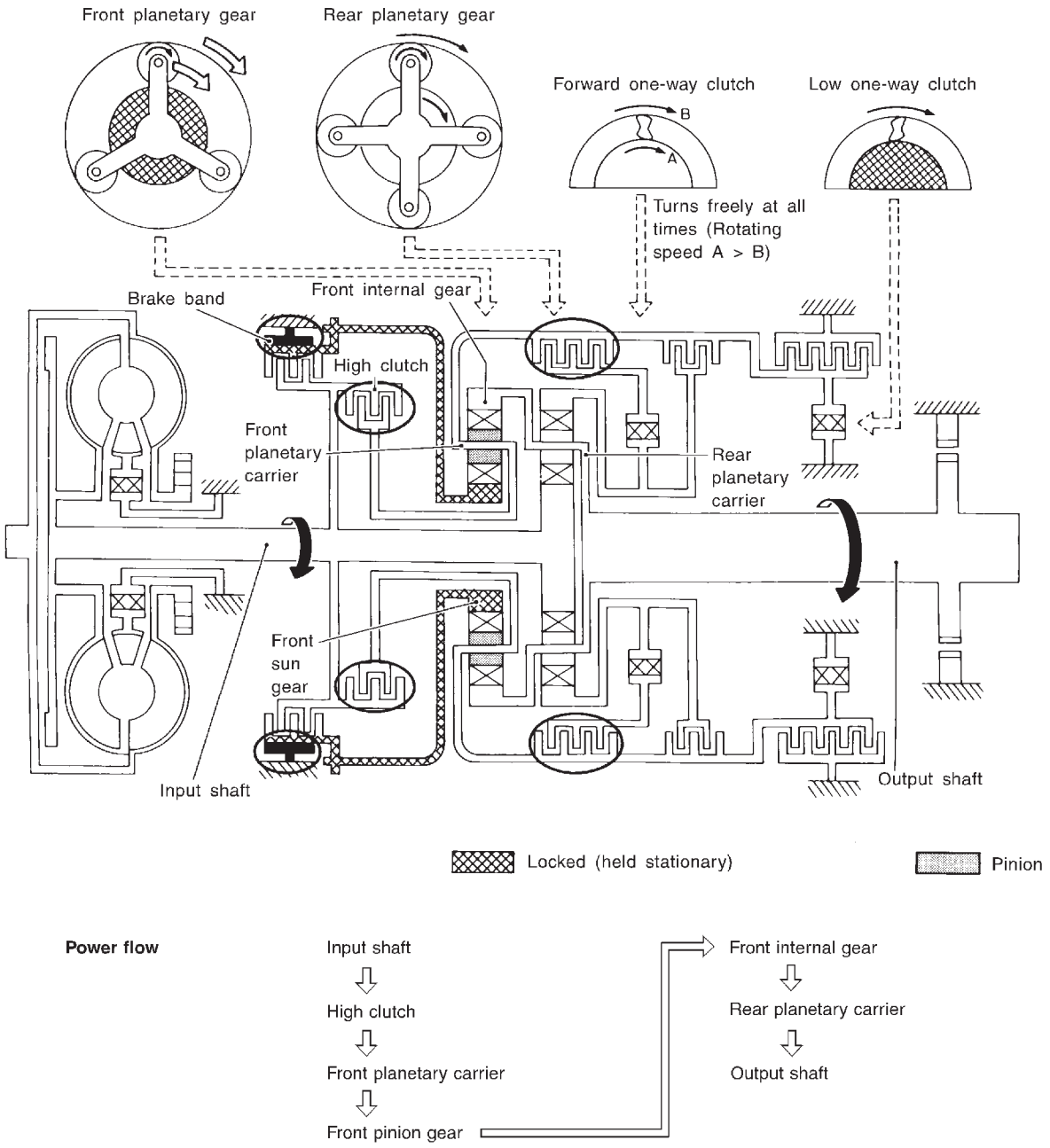

SAT099J

"R" Position

=NMAT0012S0407

Reverse clutch **Low and reverse brake**	Front planetary carrier is stationary because of the operation of low and reverse brake. Input power is transmitted to front sun gear through reverse clutch, which drives front internal gear in the opposite direction.
Engine brake	As there is no one-way clutch in the power transmission line, engine brake can be obtained when decelerating.

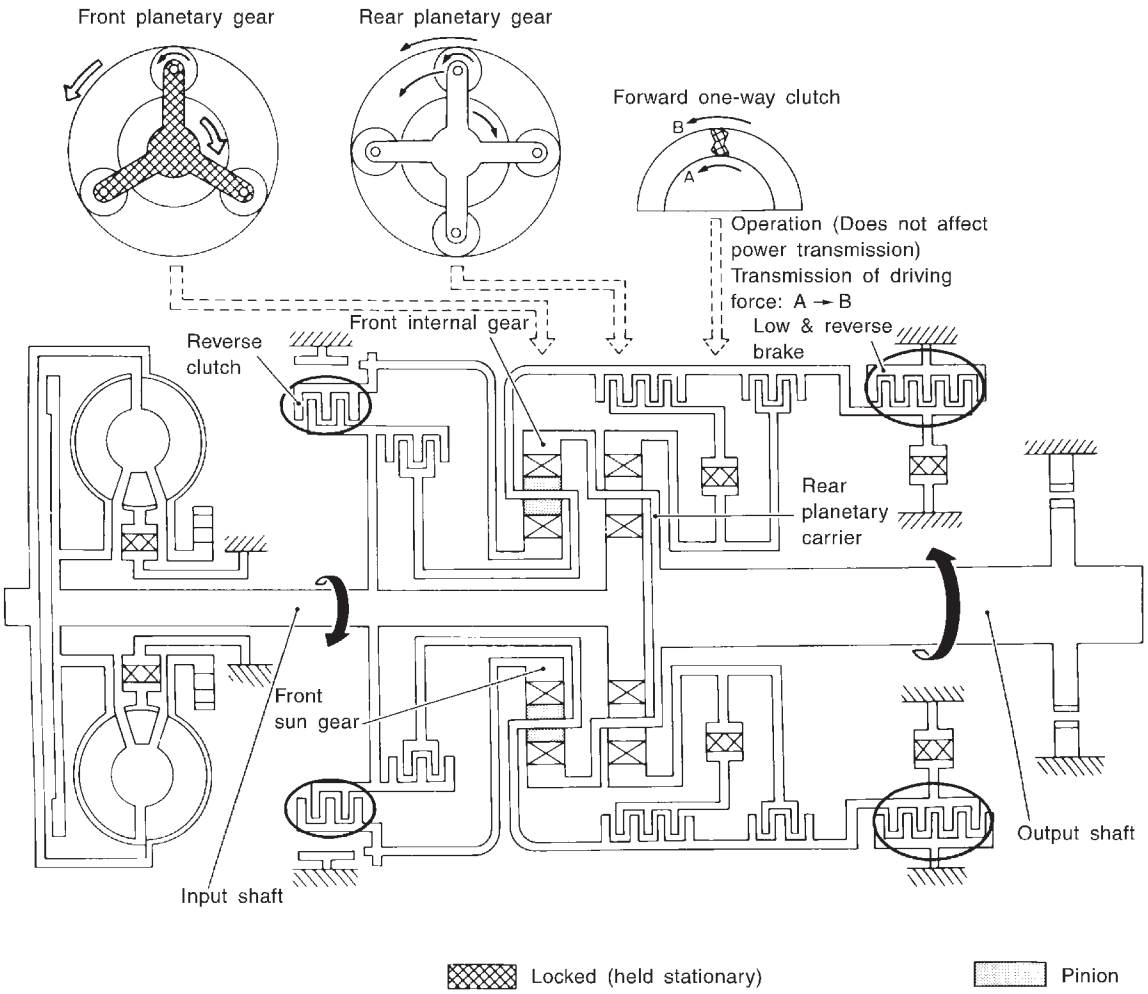

Power flow

Input shaft
⇩
Reverse clutch
⇩
Front pinion gear ⇦ Front sun gear
⇩
Front internal gear ⇨ Output shaft

SAT101J

Control System

=NMAT0013

OUTLINE

NMAT0013S01

The automatic transmission senses vehicle operating conditions through various sensors. It always controls the optimum shift position and reduces shifting and lock-up shocks.

SENSORS		TCM		ACTUATORS
PNP switch Throttle position sensor Closed throttle position switch Wide open throttle position switch Engine speed signal A/T fluid temperature sensor Revolution sensor Vehicle speed sensor Overdrive control switch A/T mode switch	▶	Shift control Line pressure control Lock-up control Overrun clutch control Timing control Fail-safe control Self-diagnosis CONSULT-II communication line Duet-EA control	▶	Shift solenoid valve A Shift solenoid valve B Overrun clutch solenoid valve Torque converter clutch solenoid valve Line pressure solenoid valve O/D OFF indicator lamp POWER indicator lamp

CONTROL SYSTEM

NMAT0013S02

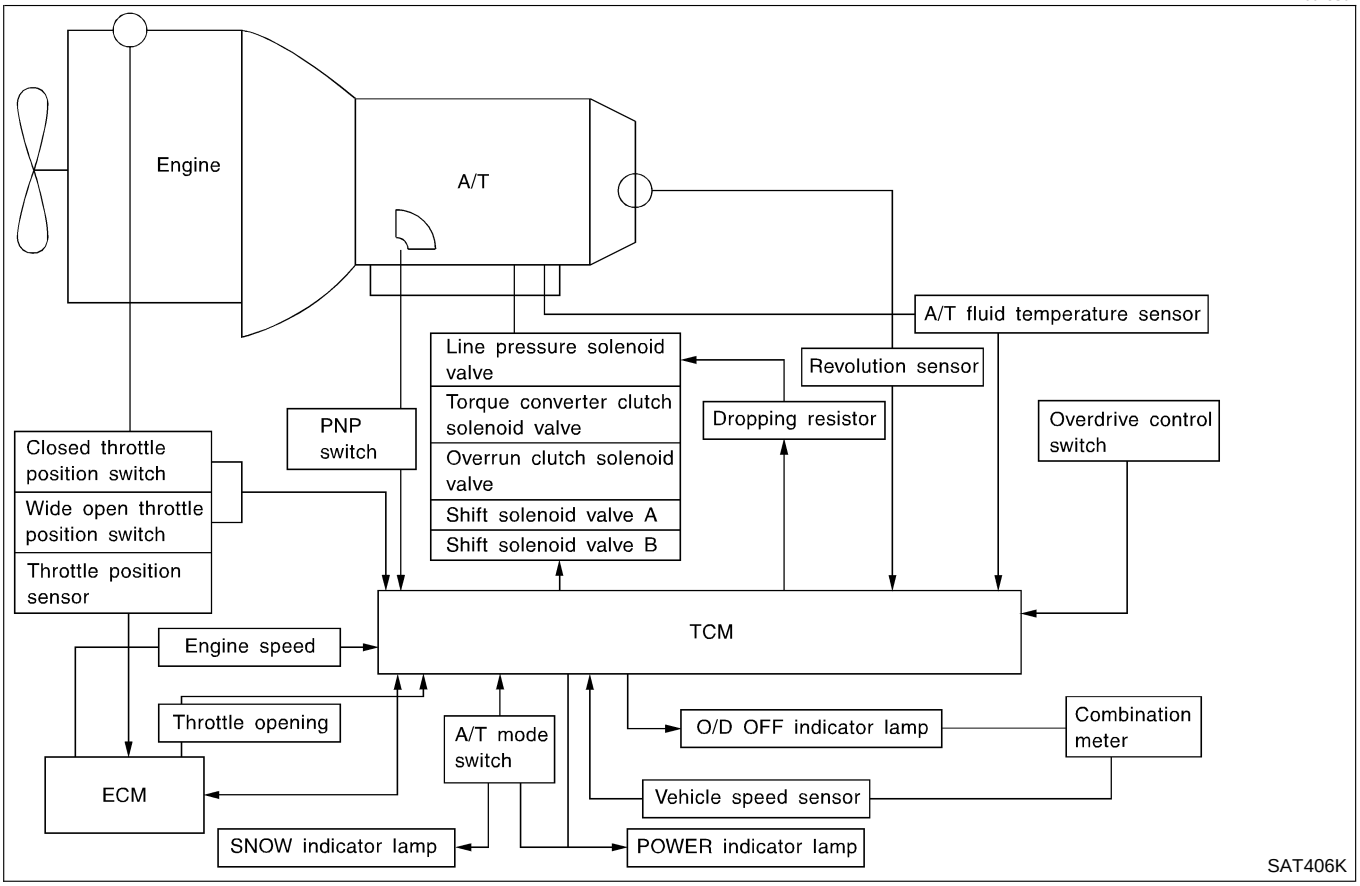

TCM FUNCTION

=NMAT0013S03

The function of the TCM is to:

- Receive input signals sent from various switches and sensors.
- Determine required line pressure, shifting point, lock-up operation, and engine brake operation.
- Send required output signals to the respective solenoids.

INPUT/OUTPUT SIGNAL OF TCM

NMAT0013S04

	Sensors and solenoid valves	Function
Input	PNP switch	Detects select lever position and sends a signal to TCM.
	Throttle position sensor	Detects throttle valve position and sends a signal to TCM.
	Closed throttle position switch	Detects throttle valve's fully-closed position and sends a signal to TCM.
	Wide open throttle position switch	Detects a throttle valve position of greater than 1/2 of full throttle and sends a signal to TCM.
	Engine speed signal	From ECM.
	A/T fluid temperature sensor	Detects transmission fluid temperature and sends a signal to TCM.
	Revolution sensor	Detects output shaft rpm and sends a signal to TCM.
	Vehicle speed sensor	Used as an auxiliary vehicle speed sensor. Sends a signal when revolution sensor (installed on transmission) malfunctions.
	Overdrive control switch A/T mode switch	Sends a signal, which prohibits a shift to "D_4" (overdrive) position, to the TCM.
Output	Shift solenoid valve A/B	Selects shifting point suited to driving conditions in relation to a signal sent from TCM.
	Line pressure solenoid valve	Regulates (or decreases) line pressure suited to driving conditions in relation to a signal sent from TCM.
	Torque converter clutch solenoid valve	Regulates (or decreases) lock-up pressure suited to driving conditions in relation to a signal sent from TCM.
	Overrun clutch solenoid valve	Controls an "engine brake" effect suited to driving conditions in relation to a signal sent from TCM.
	O/D OFF or POWER indicator lamp	Shows TCM faults, when A/T control components malfunction.

Control Mechanism

NMAT0180

LINE PRESSURE CONTROL

NMAT0180S01

TCM has the various line pressure control characteristics to meet the driving conditions.

An ON-OFF duty signal is sent to the line pressure solenoid valve based on TCM characteristics.

Hydraulic pressure on the clutch and brake is electronically controlled through the line pressure solenoid valve to accommodate engine torque. This results in smooth shift operation.

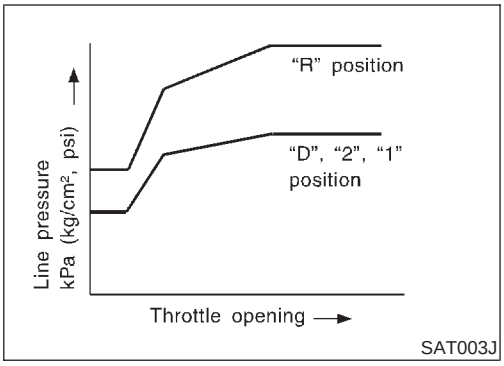

Normal Control

NMAT0180S0101

The line pressure to throttle opening characteristics is set for suitable clutch operation.

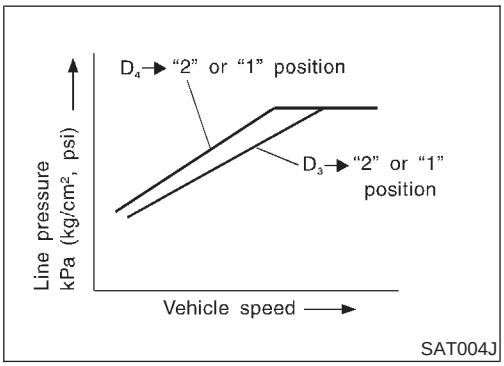

Back-up Control (Engine brake)

NMAT0180S0102

If the selector lever is shifted to "2" position while driving in D_4 (OD) or D_3, great driving force is applied to the clutch inside the transmission. Clutch operating pressure (line pressure) must be increased to deal with this driving force.

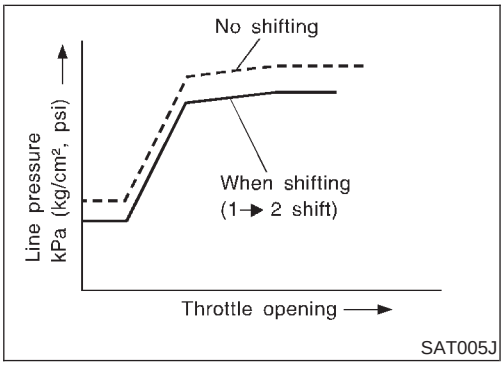

During Shift Change

NMAT0180S0103

The line pressure is temporarily reduced corresponding to a change in engine torque when shifting gears (that is, when the shift solenoid valve is switched for clutch operation) to reduce shifting shock.

At Low Fluid Temperature

NMAT0180S0104

- Fluid viscosity and frictional characteristics of the clutch facing change with fluid temperature. Clutch engaging or band-contacting pressure is compensated for, according to fluid temperature, to stabilize shifting quality.

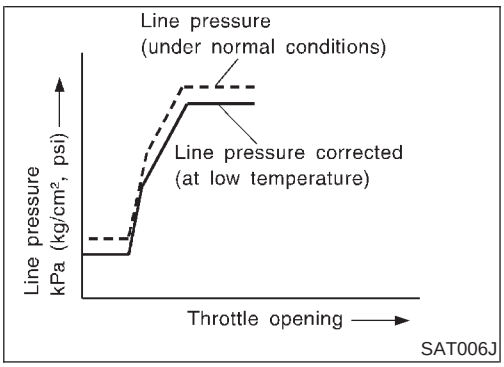

- The line pressure is reduced below 60°C (140°F) to prevent shifting shock due to low viscosity of automatic transmission fluid when temperature is low.

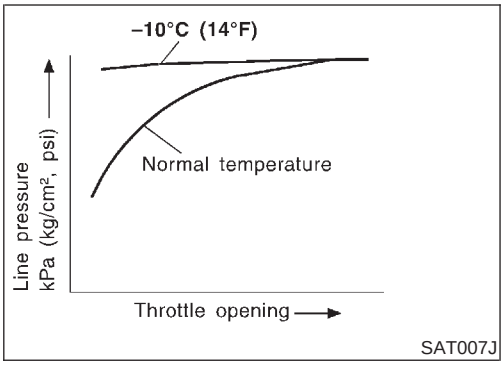

- Line pressure is increased to a maximum irrespective of the throttle opening when fluid temperature drops to −10°C (14°F). This pressure rise is adopted to prevent a delay in clutch and brake operation due to extreme drop of fluid viscosity at low temperature.

SHIFT CONTROL

NMAT0180S02

The shift is regulated entirely by electronic control to accommodate vehicle speed and varying engine operations. This is accomplished by electrical signals transmitted by the revolution sensor and throttle position sensor. This results in improved acceleration performance and fuel economy.

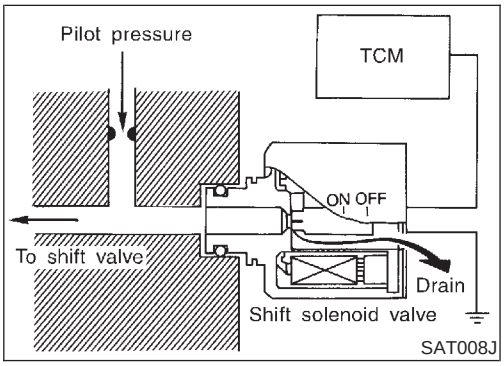

Control of Shift Solenoid Valves A and B

NMAT0180S0201

The TCM activates shift solenoid valves A and B according to signals from the throttle position sensor and revolution sensor to select the optimum gear position on the basis of the shift schedule memorized in the TCM.

The shift solenoid valve performs simple ON-OFF operation. When set to "ON", the drain circuit closes and pilot pressure is applied to the shift valve.

[Relation between shift solenoid valves A and B and gear positions]

Shift solenoid valve	Gear position				
	D_1, 2_1, 1_1	D_2, 2_2, 1_2	D_3	D_4 (OD)	N-P
A	ON (Closed)	OFF (Open)	OFF (Open)	ON (Closed)	ON (Closed)
B	ON (Closed)	ON (Closed)	OFF (Open)	OFF (Open)	ON (Closed)

Control of Shift Valves A and B

NMAT0180S0202

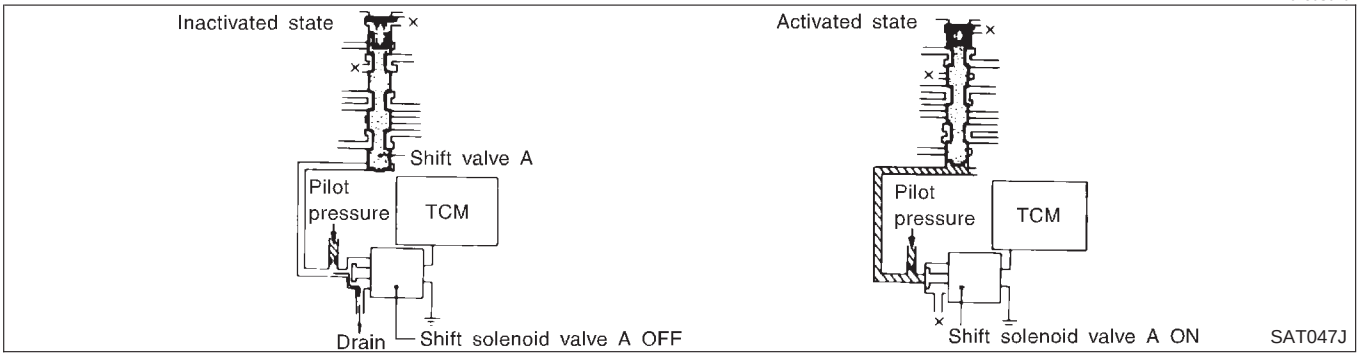

Pilot pressure generated by the operation of shift solenoid valves A and B is applied to the end face of shift valves A and B.
The drawing above shows the operation of shift valve B. When the shift solenoid valve is "ON", pilot pressure applied to the end face of the shift valve overcomes spring force, moving the valve upward.

LOCK-UP CONTROL

NMAT0180S03

The torque converter clutch piston in the torque converter is locked to eliminate torque converter slip to increase power transmission efficiency. The solenoid valve is controlled by an ON-OFF duty signal sent from the TCM. The signal is converted to oil pressure signal which controls the torque converter clutch piston.

Conditions for Lock-up Operation

NMAT0180S0301

When vehicle is driven in 4th gear position, vehicle speed and throttle opening are detected. If the detected values fall within the lock-up zone memorized in the TCM, lock-up is performed.

Overdrive control switch	ON	OFF
Selector lever	"D" position	
Gear position	D_4	D_3
Vehicle speed sensor	More than set value	
Throttle position sensor	Less than set opening	
Closed throttle position switch	OFF	
A/T fluid temperature sensor	More than 40°C (104°F)	

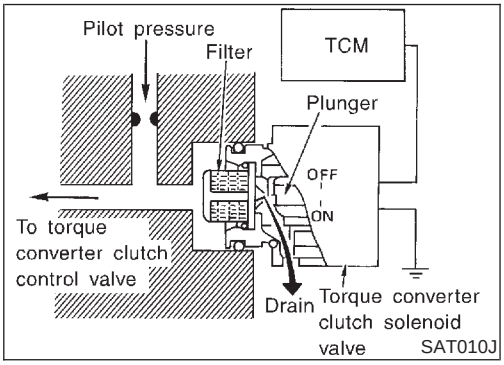

Torque Converter Clutch Solenoid Valve Control

NMAT0180S0302

The torque converter clutch solenoid valve is controlled by the TCM. The plunger closes the drain circuit during the "OFF" period, and opens the circuit during the "ON" period. If the percentage of OFF-time increases in one cycle, the pilot pressure drain time is reduced and pilot pressure remains high.
The torque converter clutch piston is designed to slip to adjust the ratio of ON-OFF, thereby reducing lock-up shock.

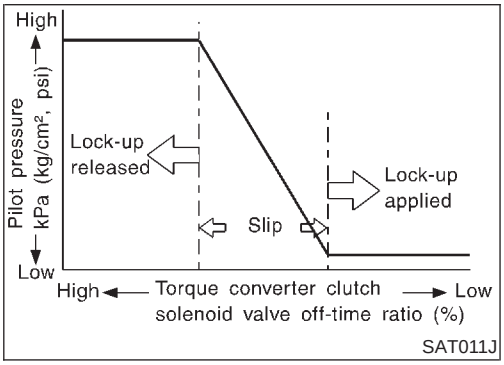

OFF-time INCREASING
↓
Amount of drain DECREASING
↓
Pilot pressure HIGH
↓
Lock-up RELEASING

Torque Converter Clutch Control Valve Operation

NMAT0180S0303

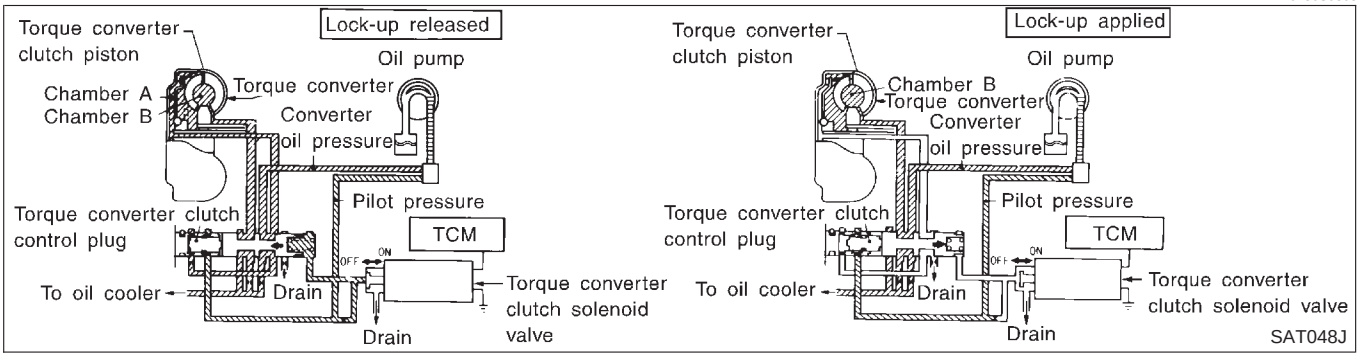

Lock-up Released

The OFF-duration of the torque converter clutch solenoid valve is long, and pilot pressure is high. The pilot pressure pushes the end face of the torque converter clutch control valve in combination with spring force to move the valve to the left. As a result, converter pressure is applied to chamber A (torque converter clutch piston release side). Accordingly, the torque converter clutch piston remains unlocked.

Lock-up Applied

When the OFF-duration of the torque converter clutch solenoid valve is short, pilot pressure drains and becomes low. Accordingly, the control valve moves to the right by the pilot pressure of the other circuit and converter pressure. As a result, converter pressure is applied to chamber B, keeping the torque converter clutch piston applied.

Also smooth lock-up is provided by transient application and release of the lock-up.

OVERRUN CLUTCH CONTROL (ENGINE BRAKE CONTROL)

NMAT0180S04

Forward one-way clutch is used to reduce shifting shocks in down-shifting operations. This clutch transmits engine torque to the wheels. However, drive force from the wheels is not transmitted to the engine because the one-way clutch rotates idle. This means the engine brake is not effective.

The overrun clutch operates when the engine brake is needed.

Overrun Clutch Operating Conditions

NMAT0180S0401

	Gear position	Throttle opening
"D" position	D_1, D_2, D_3 gear position	Less than 3/16
"2" position	2_1, 2_2 gear position	
"1" position	1_1, 1_2 gear position	At any position

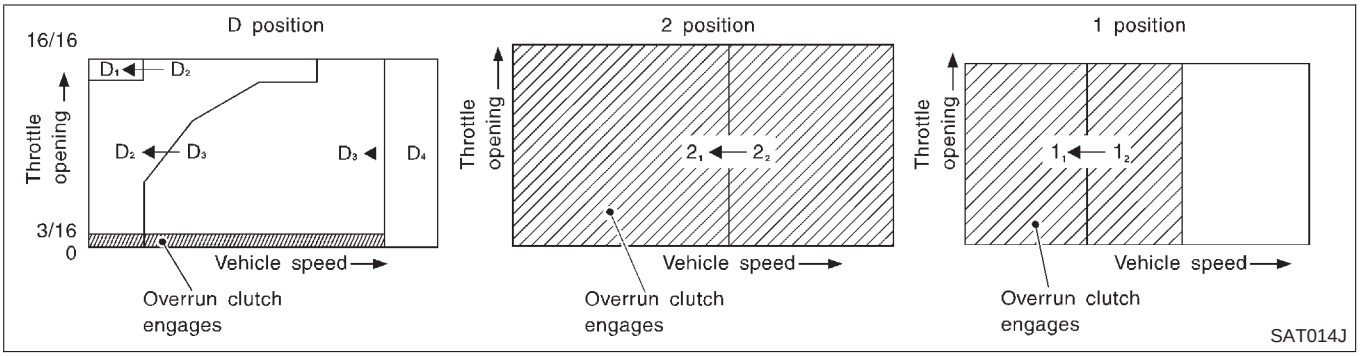

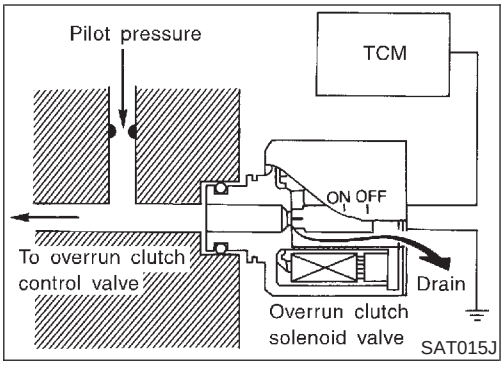

Overrun Clutch Solenoid Valve Control

NMAT0180S0402

The overrun clutch solenoid valve is operated by an ON-OFF signal transmitted by the TCM to provide overrun clutch control (engine brake control).

When this solenoid valve is "ON", the pilot pressure drain port closes. When it is "OFF", the drain port opens.

During the solenoid valve "ON" pilot pressure is applied to the end face of the overrun clutch control valve.

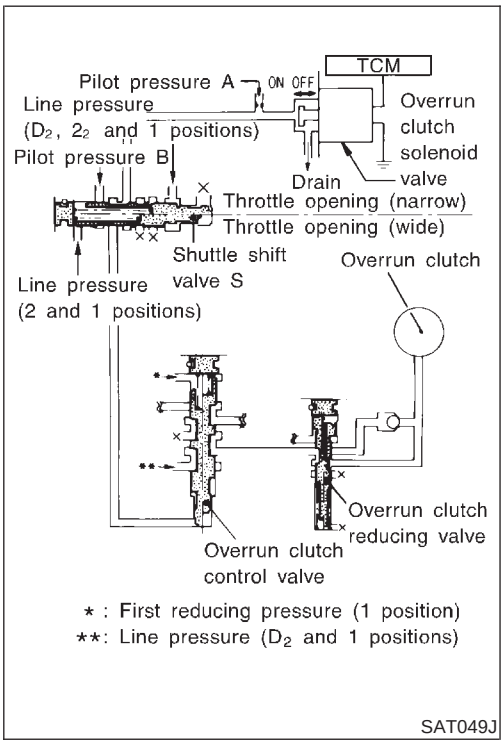

Overrun Clutch Control Valve Operation

NMAT0180S0403

When the solenoid valve is "ON", pilot pressure A is applied to the overrun clutch control valve. This pushes up the overrun clutch control valve. The line pressure is then shut off so that the clutch does not engage.

When the solenoid valve is "OFF", pilot pressure A is not generated. At this point, the overrun clutch control valve moves downward by spring force. As a result, overrun clutch operation pressure is provided by the overrun clutch reducing valve. This causes the overrun clutch to engage.

In the "1" position, the overrun clutch control valve remains pushed down so that the overrun clutch is engaged at all times.

Control Valve

NMAT0181

FUNCTION OF CONTROL VALVE

NMAT0181S01

Valve name	Function
• Pressure regulator valve • Pressure regulator plug • Pressure regulator sleeve plug	Regulate oil discharged from the oil pump to provide optimum line pressure for all driving conditions.
Pressure modifier valve	Used as a signal supplementary valve to the pressure regulator valve. Regulates pressure-modifier pressure (signal pressure) which controls optimum line pressure for all driving conditions.
Modifier accumulator piston	Smooths hydraulic pressure regulated by the pressure modifier valve to prevent pulsations.
Pilot valve	Regulates line pressure to maintain a constant pilot pressure level which controls lock-up mechanism, overrun clutch, 3-2 timing required for shifting.
Accumulator control valve Accumulator control sleeve	Regulate accumulator backpressure to pressure suited to driving conditions.
Manual valve	Directs line pressure to oil circuits corresponding to select positions. Hydraulic pressure drains when the shift lever is in Neutral.

Valve name	Function
Shift valve A	Simultaneously switches three oil circuits using output pressure of shift solenoid valve A to meet driving conditions (vehicle speed, throttle opening, etc.). Provides automatic downshifting and up-shifting (1st → 2nd → 3rd → 4th gears/4th → 3rd → 2nd → 1st gears) in combination with shift valve B.
Shift valve B	Simultaneously switches three oil circuits using output pressure of shift solenoid valve B in relation to driving conditions (vehicle speed, throttle opening, etc.). Provides automatic downshifting and up-shifting (1st → 2nd → 3rd → 4th gears/4th → 3rd → 2nd → 1st gears) in combination with shift valve A.
Shuttle shift valve S	Switches hydraulic circuits to provide 3-2 timing control and overrun clutch control in relation to the throttle opening. Inactivates the overrun clutch to prevent interlocking in 4th gear when the throttle is wide open.
Overrun clutch control valve	Switches hydraulic circuits to prevent engagement of the overrun clutch simultaneously with application of the brake band in 4th gear. (Interlocking occurs if the overrun clutch engages during D_4 gear operation.)
4-2 relay valve	Memorizes that the transmission is in 4th gear. Prevents the transmission from downshifting from 4th gear to 3rd and then to 2nd in combination with 4-2 sequence valve and shift valves A and B when downshifting from 4th to 2nd gear.
4-2 sequence valve	Prevents band servo pressure from draining before high clutch operating pressure and band servo releasing pressure drain (from the same circuit) during downshifting from 4th to 2nd gear.
Servo charger valve	An accumulator and a one-way orifice are used in the 2nd gear band servo oil circuit to dampen shifting shock when shifting from 1st to 2nd gear. To maintain adequate flowrate when downshifting from 4th or 3rd gear to 2nd gear, the servo charger valve directs 2nd gear band servo hydraulic pressure to the circuit without going through the one-way orifice when downshifting from 3rd or a higher gear.
3-2 timing valve	Prevents a late operation of the brake band when shifting selector lever from "D" to "1" or "2" position while driving in D_3.
"1" reducing valve	Reduces low & reverse brake pressure to dampen engine-brake shock when downshifting from the "1" position 2nd gear to 1st gear.
Overrun clutch reducing valve	Reduces oil pressure directed to the overrun clutch and prevents engine-brake shock. In "1" and "2" positions, line pressure acts on the overrun clutch reducing valve to increase the pressure-regulating point, with resultant engine brake capability.
Torque converter relief valve	Prevents an excessive rise in torque converter pressure.
Torque converter clutch control valve, torque converter clutch control plug and torque converter clutch control sleeve	Activate or inactivate the lock-up function. Also provide smooth lock-up through transient application and release of the lock-up system.
Shuttle shift valve D	Switches hydraulic circuits so that output pressure of the torque converter clutch solenoid valve acts on the lock-up valve in the "D" position of 2nd, 3rd and 4th gears. (In the "D" position 1st gear, lock-up is inhibited.) ● Lock-up control is not affected in "D" position 2nd, 3rd or 4th gears, unless output pressure of the torque converter clutch solenoid valve is generated by a signal from the control unit.

CONSULT-II

NMAT0184

After performing “SELF-DIAGNOSTIC PROCEDURE (WITH CONSULT-II)” (AT-32), place check marks for results on the “DIAGNOSTIC WORKSHEET”, AT-44. Reference pages are provided following the items.

NOTICE:

1) The CONSULT-II electrically displays shift timing and lock-up timing (that is, operation timing of each solenoid).
   Check for time difference between actual shift timing and the CONSULT-II display. If the difference is noticeable, mechanical parts (except solenoids, sensors, etc.) may be malfunctioning. Check mechanical parts using applicable diagnostic procedures.
2) Shift schedule (which implies gear position) displayed on CONSULT-II and that indicated in Service Manual may differ slightly. This occurs because of the following reasons:

- Actual shift schedule has more or less tolerance or allowance,
- Shift schedule indicated in Service Manual refers to the point where shifts start, and
- Gear position displayed on CONSULT-II indicates the point where shifts are completed.

3) Shift solenoid valve “A” or “B” is displayed on CONSULT-II at the start of shifting. Gear position is displayed upon completion of shifting (which is computed by TCM).
4) Additional CONSULT-II information can be found in the Operation Manual supplied with the CONSULT-II unit.

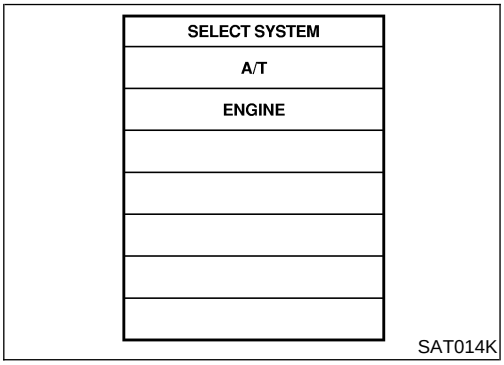

SELF-DIAGNOSTIC PROCEDURE (WITH CONSULT-II)

NMAT0184S01

1. Turn on CONSULT-II and touch “A/T” for TCM self-diagnosis. If A/T is not displayed, check TCM power supply and ground circuit. Refer to AT-86. If result is NG, refer to EL-7, “Schematic”.

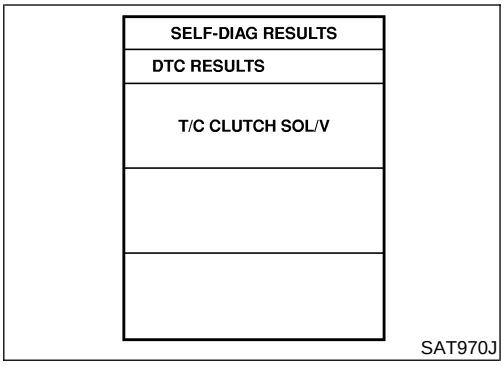

2. Touch "SELF-DIAG RESULTS".
   Display shows malfunction experienced since the last erasing operation.
   CONSULT-II performs REAL-TIME SELF-DIAGNOSIS.
   Also, any malfunction detected while in this mode will be displayed at real time.

SELF-DIAGNOSTIC RESULT TEST MODE

NMAT0184S02

Detected items (Screen terms for CONSULT-II, "SELF-DIAG RESULTS" test mode)		Malfunction is detected when ...	Remarks
Item	Display		
No failure (NO DTC IS DETECTED FURTHER TESTING MAY BE REQUIRED**)		• No failure has been detected.	
Initial start		• This is not a malfunction message (Whenever shutting off a power supply to the TCM, this message appears on the screen.)	
INITIAL START	*INITIAL START*		
Revolution sensor	VHCL SPEED SEN·A/T	• TCM does not receive the proper voltage signal from the sensor.	
Vehicle speed sensor (Meter)	VHCL SPEED SEN·MTR	• TCM does not receive the proper voltage signal from the sensor.	
Throttle position sensor Throttle position switch	THROTTLE POSI SEN	• TCM receives an excessively low or high voltage from the sensor.	
Shift solenoid valve A	SHIFT SOLENOID/V A	• TCM detects an improper voltage drop when it tries to operate the solenoid valve.	
Shift solenoid valve B	SHIFT SOLENOID/V B	• TCM detects an improper voltage drop when it tries to operate the solenoid valve.	
Overrun clutch solenoid valve	OVERRUN CLUTCH S/V	• TCM detects an improper voltage drop when it tries to operate the solenoid valve.	
T/C clutch solenoid valve	T/C CLUTCH SOL/V	• TCM detects an improper voltage drop when it tries to operate the solenoid valve.	
A/T fluid temperature sensor	BATT/FLUID TEMP SEN	• TCM receives an excessively low or high voltage from the sensor.	To be displayed in case of abnormality and when no recording is made.
Engine speed signal	ENGINE SPEED SIG	• TCM does not receive the proper voltage signal from the ECM.	
Line pressure solenoid valve	LINE PRESSURE S/V	• TCM detects an improper voltage drop when it tries to operate the solenoid valve.	
TCM (RAM)	CONTROL UNIT (RAM)	• TCM memory (RAM) is malfunctioning.	
TCM (ROM)	CONTROL UNIT (ROM)	• TCM memory (ROM) is malfunctioning.	
TCM (EEPROM)	CONT UNIT (EEP ROM)	• TCM memory (EEPROM) is malfunctioning.	

DATA MONITOR MODE (A/T)

NMAT0184S03

Item	Display	Monitor item		Description	Remarks
		TCM input signals	Main signals		
Vehicle speed sensor 1 (A/T) (Revolution sensor)	VHCL/S SE·A/T [km/h] or [mph]	X	—	● Vehicle speed computed from signal of revolution sensor is displayed.	When racing engine in "N" or "P" position with vehicle stationary, CONSULT-II data may not indicate 0 km/h (0 mph).
Vehicle speed sensor 2 (Meter)	VHCL/S SE·MTR [km/h] or [mph]	X	—	● Vehicle speed computed from signal of vehicle speed sensor is displayed.	Vehicle speed display may not be accurate under approx. 10 km/h (6 mph). It may not indicate 0 km/h (0 mph) when vehicle is stationary.
Throttle position sensor	THRTL POS SEN [V]	X	—	● Throttle position sensor signal voltage is displayed.	
A/T fluid temperature sensor	FLUID TEMP SE [V]	X	—	● A/T fluid temperature sensor signal voltage is displayed. ● Signal voltage lowers as fluid temperature rises.	
Battery voltage	BATTERY VOLT [V]	X	—	● Source voltage of TCM is displayed.	
Engine speed	ENGINE SPEED [rpm]	X	X	● Engine speed, computed from engine speed signal, is displayed.	Engine speed display may not be accurate under approx. 800 rpm. It may not indicate 0 rpm even when engine is not running.
Turbine revolution sensor	TURBINE REV [rpm]	X	—	Turbine revolution computed from signal of turbine revolution sensor is displayed.	● This is displayed even when no turbine revolution sensor is equipped.
Overdrive control switch	OVERDRIVE SW [ON/OFF]	X	—	● ON/OFF state computed from signal of overdrive control SW is displayed.	
PN position switch	PN POSI SW [ON/OFF]	X	—	● ON/OFF state computed from signal of PN position SW is displayed.	
R position switch	R POSITION SW [ON/OFF]	X	—	● ON/OFF state computed from signal of R position SW is displayed.	
D position switch	D POSITION SW [ON/OFF]	X	—	● ON/OFF state computed from signal of D position SW is displayed.	
2 position switch	2 POSITION SW [ON/OFF]	X	—	● ON/OFF status, computed from signal of 2 position SW, is displayed.	
1 position switch	1 POSITION SW [ON/OFF]	X	—	● ON/OFF status, computed from signal of 1 position SW, is displayed.	

Item	Display	Monitor item		Description	Remarks
		TCM input signals	Main signals		
ASCD cruise signal	ASCD-CRUISE [ON/OFF]	X	—	• Status of ASCD cruise signal is displayed. ON ... Cruising state OFF ... Normal running state	• This is displayed even when no ASCD is mounted.
ASCD OD cut signal	ASCD-OD CUT [ON/OFF]	X	—	• Status of ASCD OD release signal is displayed. ON ... OD released OFF ... OD not released	• This is displayed even when no ASCD is mounted.
Kickdown switch	KICKDOWN SW [ON/OFF]	X	—	• ON/OFF status, computed from signal of kickdown SW, is displayed.	• This is displayed even when no kickdown switch is equipped.
A/T mode switch [POWER]	POWER SHIFT SW [ON/OFF]	X	—	• ON/OFF state computed from signal of POWER mode SW is displayed.	
Closed throttle position switch	CLOSED THL/SW [ON/OFF]	X	—	• ON/OFF status, computed from signal of closed throttle position SW, is displayed.	
Wide open throttle position switch	W/O THRL/ P-SW [ON/OFF]	X	—	• ON/OFF status, computed from signal of wide open throttle position SW, is displayed.	
A/T mode switch [SNOW]	HOLD SW [ON/OFF]	X	—	• ON/OFF state computed from signal of SNOW mode SW is displayed.	
Gear position	GEAR	—	X	• Gear position data used for computation by TCM, is displayed.	
Selector lever position	SLCT LVR POSI	—	X	• Selector lever position data, used for computation by TCM, is displayed.	• A specific value used for control is displayed if fail-safe is activated due to error.
Vehicle speed	VEHICLE SPEED [km/h] or [mph]	—	X	• Vehicle speed data, used for computation by TCM, is displayed.	
Throttle position	THROTTLE POSI [/8]	—	X	• Throttle position data, used for computation by TCM, is displayed.	• A specific value used for control is displayed if fail-safe is activated due to error.
Line pressure duty	LINE PRES DTY [%]	—	X	• Control value of line pressure solenoid valve, computed by TCM from each input signal, is displayed.	
Torque converter clutch solenoid valve duty	TCC S/V DUTY [%]	—	X	• Control value of torque converter clutch solenoid valve, computed by TCM from each input signal, is displayed.	

Item	Display	Monitor item		Description	Remarks
		TCM input signals	Main signals		
Shift solenoid valve A	SHIFT S/V A [ON/OFF]	—	X	● Control value of shift solenoid valve A, computed by TCM from each input signal, is displayed.	Control value of solenoid is displayed even if solenoid circuit is disconnected. The "OFF" signal is displayed if solenoid circuit is shorted.
Shift solenoid valve B	SHIFT S/V B [ON/OFF]	—	X	● Control value of shift solenoid valve B, computed by TCM from each input signal, is displayed.	
Overrun clutch solenoid valve	OVERRUN/C S/V [ON/OFF]	—	X	● Control value of overrun clutch solenoid valve computed by TCM from each input signal is displayed.	
Self-diagnosis display lamp (POWER indicator lamp)	SELF-D DP LMP [ON/OFF]	—	X	● Control status of POWER indicator lamp is displayed.	

X: Applicable
—: Not applicable

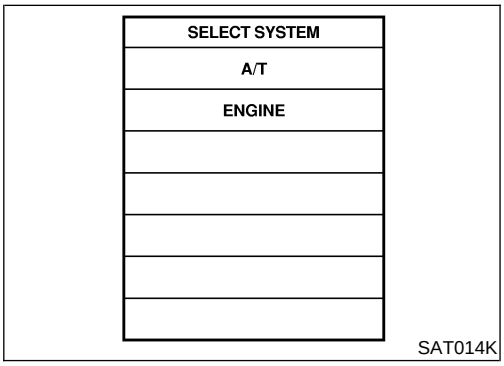

HOW TO ERASE SELF-DIAGNOSTIC RESULTS (WITH CONSULT-II)

NMAT0184S07

1. If the ignition switch stays "ON" after repair work, be sure to turn ignition switch "OFF" once. Wait for at least 5 seconds and then turn it "ON" again.
2. Turn CONSULT-II "ON", and touch "A/T".

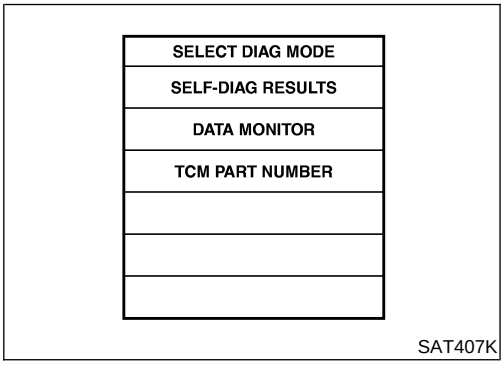

3. Touch "SELF-DIAG RESULTS".

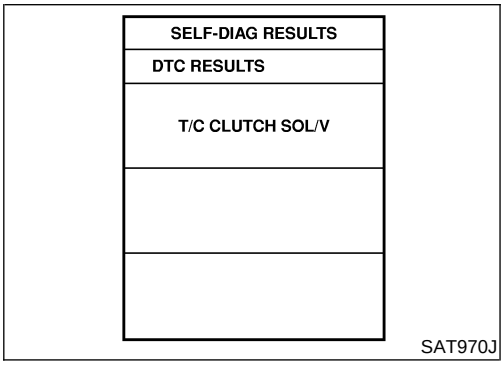

4. Touch "ERASE". (The self-diagnostic results will be erased.)

Diagnostic Procedure Without CONSULT-II

NMAT0206

⊗ SELF-DIAGNOSTIC PROCEDURE (WITHOUT CONSULT-II)

NMAT0206S03

1	CHECK POWER INDICATOR LAMP

1. Start the engine with selector lever in “P” position. Warm engine to normal operating temperature.
2. Turn ignition switch to “OFF” position.
3. Wait 5 seconds.
4. Set A/T mode switch to “AUTO” position.
5. Set overdrive control switch in “ON” position.
6. Turn ignition switch to “ON” position.
   (Do not start engine.)
7. Does POWER indicator lamp come on for about 2 seconds?

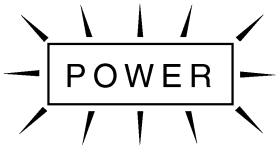

POWER indicator lamp

SAT408K

Yes or No

Yes	▶	GO TO 2.
No	▶	Go to “1. POWER Indicator Lamp Does Not Come On”, AT-149.

2	JUDGEMENT PROCEDURE STEP 1

1. Turn ignition switch to “OFF” position.
2. Turn ignition switch to “ACC” position.
3. Move selector lever from “P” to “D” position.
4. Turn ignition switch to “OFF” position.
5. Set overdrive control switch in “OFF” position.
6. Depress accelerator pedal fully and release it.
7. Turn ignition switch to “ON” position (Do not start engine.).
8. Wait 2 seconds.
9. Move selector lever to “2” position.
10. Set overdrive control switch in “ON” position.

	▶	GO TO 3.

3	JUDGEMENT PROCEDURE STEP 2

1. Move selector lever to "1" position.
2. Set overdrive control switch in "OFF" position.
3. Depress accelerator pedal fully and release it.

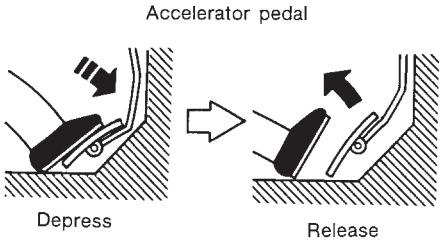

SAT981F

▶	GO TO 4.

4	CHECK SELF-DIAGNOSIS CODE

Check POWER indicator lamp.
Refer to JUDGEMENT OF SELF-DIAGNOSIS CODE, AT-38.

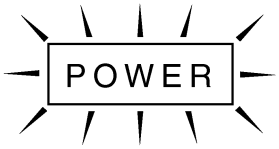

POWER indicator lamp

SAT408K

▶	**DIAGNOSIS END**

JUDGEMENT OF SELF-DIAGNOSIS CODE

NMAT0206S04

POWER indicator lamp:

All judgement flickers are same.	1st judgement flicker is longer than others.
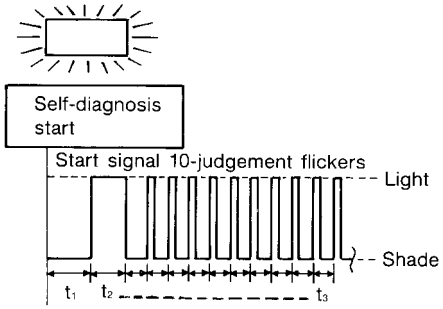 SAT819H	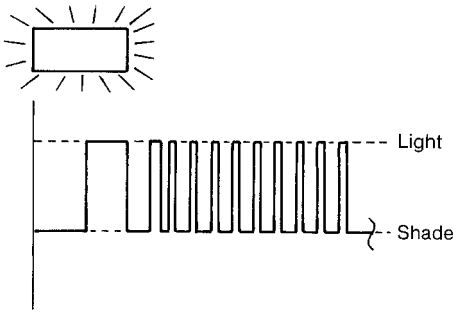 SAT794H
All circuits that can be confirmed by self-diagnosis are OK.	Revolution sensor circuit is short-circuited or disconnected. ⇒ **Go to VEHICLE SPEED SENSOR·A/T (REVOLUTION SENSOR), AT-89.**

POWER indicator lamp:

2nd judgement flicker is longer than others.

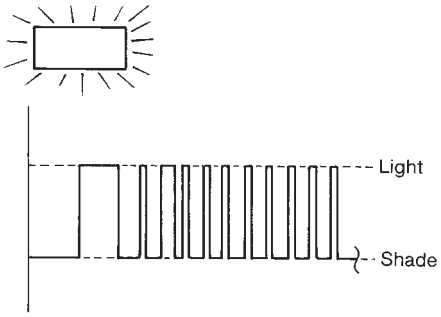

SAT795H

Vehicle speed sensor circuit is short-circuited or disconnected.
⇒ **Go to VEHICLE SPEED SENSOR·MTR, AT-95.**

3rd judgement flicker is longer than others.

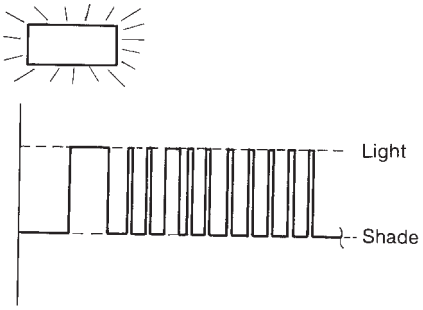

SAT796H

Throttle position sensor circuit is short-circuited or disconnected.
⇒ **Go to THROTTLE POSITION SENSOR, AT-98.**

4th judgement flicker is longer than others.

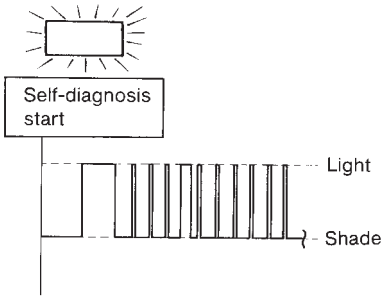

SAT797H

Shift solenoid valve A circuit is short-circuited or disconnected.
⇒ **Go to SHIFT SOLENOID VALVE A, AT-106.**

5th judgement flicker is longer than others.

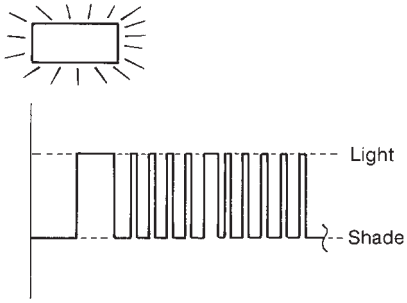

SAT798H

Shift solenoid valve B circuit is short-circuited or disconnected.
⇒ **Go to SHIFT SOLENOID VALVE B, AT-111.**

6th judgement flicker is longer than others.

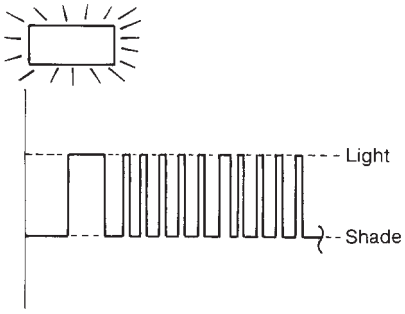

SAT799H

Overrun clutch solenoid valve circuit is short-circuited or disconnected.
⇒ **Go to OVERRUN CLUTCH SOLENOID VALVE, AT-116.**

7th judgement flicker is longer than others.

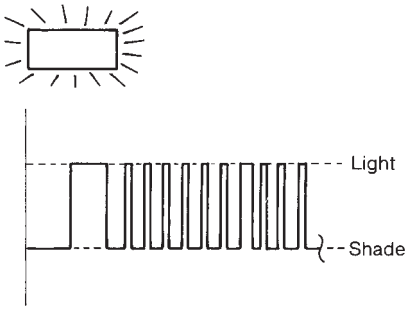

SAT800H

Torque converter clutch solenoid valve circuit is short-circuited or disconnected.
⇒ **Go to TORQUE CONVERTER CLUTCH SOLENOID VALVE, AT-120.**

POWER indicator lamp:	
8th judgement flicker is longer than others. 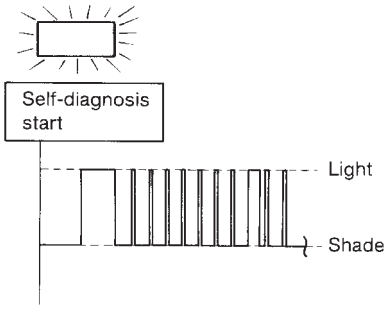 SAT801H A/T fluid temperature sensor is disconnected or TCM power source circuit is damaged. ⇒ **Go to A/T FLUID TEMPERATURE SENSOR AND TCM POWER SOURCE, AT-125.**	9th judgement flicker is longer than others. 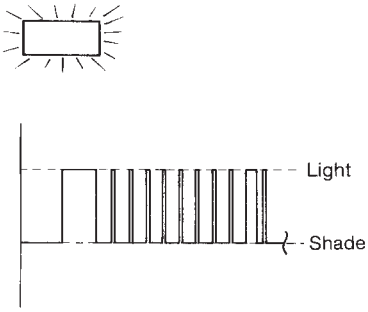 SAT802H Engine speed signal circuit is short-circuited or disconnected. ⇒ **Go to ENGINE SPEED SIGNAL, AT-132.**
10th judgement flicker is longer than others. 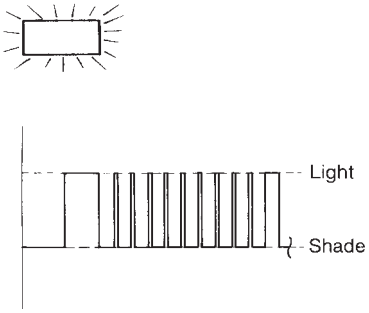 SAT803H Line pressure solenoid valve circuit is short-circuited or disconnected. ⇒ **Go to LINE PRESSURE SOLENOID VALVE, AT-136.**	Flickers as shown below. 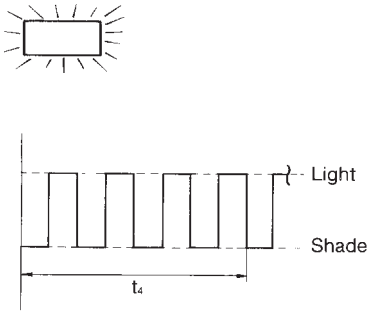 SAT804H Battery power is low. Battery has been disconnected for a long time. Battery is connected conversely. (When reconnecting TCM connectors. — This is not a problem.)
Lamp comes off. 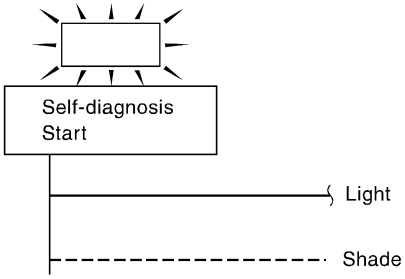 SAT809J PNP switch, overdrive control switch, A/T mode switch or throttle position switch circuit is disconnected or TCM is damaged. ⇒ **Go to 22. TCM Self-diagnosis Does Not Activate (PNP, OVERDRIVE CONTROL, A/T MODE AND THROTTLE POSITION SWITCHES), AT-189.**	

t_1 = 2.5 seconds t_2 = 2.0 seconds t_3 = 1.0 second t_4 = 1.0 second

HOW TO ERASE SELF-DIAGNOSTIC RESULTS (WITHOUT CONSULT-II)

NMAT0206S05

1. If the ignition switch stays "ON" after repair work, be sure to turn ignition switch "OFF" once. Wait for at least 5 seconds and then turn it "ON" again.
2. Perform "SELF-DIAGNOSTIC PROCEDURE (Without CONSULT-II)''. Refer to AT-37.
3. Turn ignition switch "OFF". (The self-diagnostic results will be erased.)

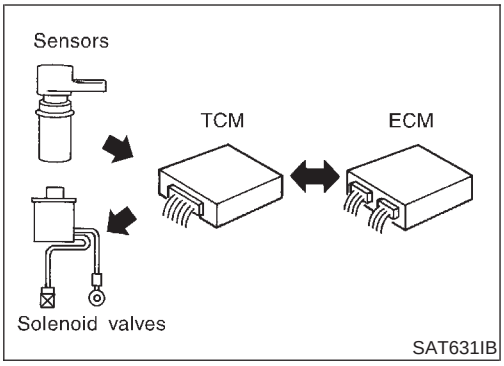

SAT631IB

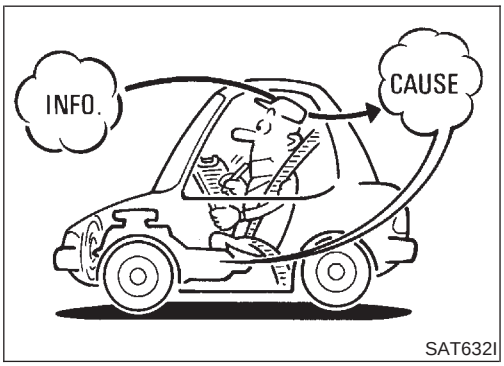

SAT632I

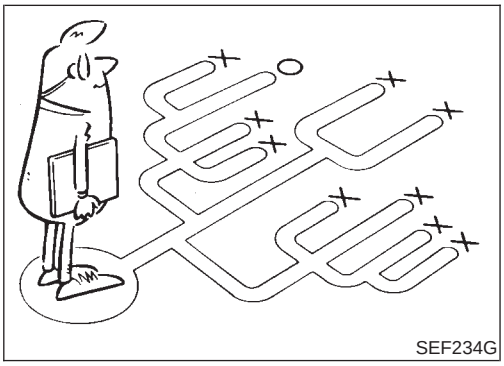
SEF234G

Introduction

NMAT0019

The TCM receives a signal from the vehicle-speed sensor, throttle (accelerator) position sensor or inhibitor switch and provides shift control or lock-up control via solenoid valves.

Input and output signals must always be correct and stable in the operation of the A/T system. The A/T system must be in good operating condition and be free of valve seizure, solenoid valve malfunction, etc.

It is much more difficult to diagnose a problem that occurs intermittently rather than continuously. Most intermittent problems are caused by poor electric connections or improper wiring. In this case, careful checking of suspected circuits may help prevent the replacement of good parts.

A visual check only may not find the cause of the problems. A road test with CONSULT-II or a circuit tester connected should be performed. Follow the “Work Flow”. Refer to AT-46.

Before undertaking actual checks, take a few minutes to talk with a customer who approaches with a driveability complaint. The customer can supply good information about such problems, especially intermittent ones. Find out what symptoms are present and under what conditions they occur. A “Diagnostic Worksheet” like the example (AT-44) should be used.

Start your diagnosis by looking for “conventional” problems first. This will help troubleshoot driveability problems on an electronically controlled engine vehicle.

Also check related Service bulletins.

DIAGNOSTIC WORKSHEET

=NMAT0019S01

Information From Customer

NMAT0019S0101

KEY POINTS

WHAT ..... Vehicle & A/T model
WHEN..... Date, Frequencies
WHERE..... Road conditions
HOW..... Operating conditions, Symptoms

Customer name MR/MS	Model & Year	VIN
Trans. model	Engine	Mileage
Incident Date	Manuf. Date	In Service Date
Frequency	☐ Continuous ☐ Intermittent (times a day)	
Symptoms	☐ Vehicle does not move. (☐ Any position ☐ Particular position)	
	☐ No up-shift (☐ 1st → 2nd ☐ 2nd → 3rd ☐ 3rd → O/D)	
	☐ No down-shift (☐ O/D → 3rd ☐ 3rd → 2nd ☐ 2nd → 1st)	
	☐ Lockup malfunction	
	☐ Shift point too high or too low.	
	☐ Shift shock or slip (☐ N → D ☐ Lockup ☐ Any drive position)	
	☐ Noise or vibration	
	☐ No kickdown	
	☐ No pattern select	
	☐ Others ( )	
POWER indicator lamp	Blinks for about 8 seconds.	
	☐ Continuously lit	☐ Not lit
Malfunction indicator lamp (MIL)	☐ Continuously lit	☐ Not lit

Diagnostic Worksheet

=NMAT0019S0102

1.	☐ Read the Fail-safe and listen to customer complaints.			AT-5
2.	☐ A/T FLUID CHECK			AT-9
		☐ Leakage (Follow specified procedure) ☐ Fluid condition ☐ Fluid level		
3.	☐ Perform STALL TEST and LINE PRESSURE TEST.			AT-48, AT-51
		☐ Stall test — Mark possible damaged components/others.		
			☐ Torque converter one-way clutch ☐ Reverse clutch ☐ Forward clutch ☐ Overrun clutch ☐ Forward one-way clutch	☐ Low & reverse brake ☐ Low one-way clutch ☐ Engine ☐ Line pressure is low ☐ Clutches and brakes except high clutch and brake band are OK
		☐ Line pressure test — Suspected parts:		
4.	☐ Perform all ROAD TEST and mark required procedures.			AT-52
	4-1.	Check before engine is started.		AT-53
		☐ SELF-DIAGNOSTIC PROCEDURE — Mark detected items.		
			☐ Vehicle speed sensor·A/T (Revolution sensor), AT-89. ☐ Vehicle speed sensor·MTR, AT-95. ☐ Throttle position sensor, AT-98. ☐ Shift solenoid valve A, AT-106. ☐ Shift solenoid valve B, AT-111. ☐ Overrun clutch solenoid valve, AT-116. ☐ Torque converter clutch solenoid valve, AT-120. ☐ A/T fluid temperature sensor and TCM power source, AT-125. ☐ Engine speed signal, AT-132. ☐ Line pressure solenoid valve, AT-136. ☐ Control unit (RAM), control unit (ROM), AT-142. ☐ Control unit (EEPROM), AT-144. ☐ PNP, overdrive control, A/T mode and throttle position switches, AT-189. ☐ Battery ☐ Others	
	4-2.	Check at idle		AT-55
		☐ 1. POWER Indicator Lamp Does Not Come On, AT-149. ☐ 2. POWER or SNOW Indicator Lamp Does Not Come On, AT-150. ☐ 3. O/D OFF Indicator Lamp Does Not Come On, AT-151. ☐ 4. POWER Indicator Lamp Does Not Come On, AT-152. ☐ 5. Engine Cannot Be Started In "P" And "N" Position, AT-153. ☐ 6. In "P" Position, Vehicle Moves Forward Or Backward When Pushed, AT-154. ☐ 7. In "N" Position, Vehicle Moves, AT-155. ☐ 8. Large Shock. "N" → "R" Position, AT-157. ☐ 9. Vehicle Does Not Creep Backward In "R" Position, AT-159. ☐ 10. Vehicle Does Not Creep Forward In "D", "2" Or "1" Position, AT-162.		

4.	4-3.	Cruise test		AT-56, AT-60
		Part-1		
		☐ 11. Vehicle Cannot Be Started From D_1, AT-165. ☐ 12. A/T Does Not Shift: $D_1 \rightarrow D_2$ Or Does Not Kickdown: $D_4 \rightarrow D_2$, AT-168. ☐ 13. A/T Does Not Shift: $D_2 \rightarrow D_3$, AT-171. ☐ 14. A/T Does Not Shift: $D_3 \rightarrow D_4$, AT-174. ☐ 15. A/T Does Not Perform Lock-up, AT-177. ☐ 16. A/T Does Not Hold Lock-up Condition, AT-179. ☐ 17. Lock-up Is Not Released, AT-181. ☐ 18. Engine Speed Does Not Return To Idle (Light Braking $D_4 \rightarrow D_3$), AT-182.		
		Part-2		AT-64
		☐ 19. Vehicle Does Not Start From D_1, AT-184. ☐ 12. A/T Does Not Shift: $D_1 \rightarrow D_2$ Or Does Not Kickdown: $D_4 \rightarrow D_2$, AT-168. ☐ 13. A/T Does Not Shift: $D_2 \rightarrow D_3$, AT-171. ☐ 14. A/T Does Not Shift: $D_3 \rightarrow D_4$, AT-174.		
		Part-3		AT-66
		☐ 20. A/T Does Not Shift: $D_4 \rightarrow D_3$ When Overdrive Control Switch "ON" → "OFF", AT-185. ☐ 18. Engine Speed Does Not Return To Idle (Engine Brake In D_3), AT-182. ☐ 21. A/T Does Not Shift: $D_3 \rightarrow 2_2$, When Selector Lever "D" → "2" Position, AT-186. ☐ 18. Engine Speed Does Not Return To Idle (Engine Brake In 2_2), AT-182. ☐ 22. A/T Does Not Shift: $2_2 \rightarrow 1_1$, When Selector Lever "2" → "1" Position, AT-187. ☐ 23. Vehicle Does Not Decelerate By Engine Brake, AT-188. ☐ SELF-DIAGNOSTIC PROCEDURE — Mark detected items.		
			☐ Vehicle speed sensor·A/T (Revolution sensor), AT-89. ☐ Vehicle speed sensor·MTR, AT-95. ☐ Throttle (accelerator) position sensor, AT-98. ☐ Shift solenoid valve A, AT-106. ☐ Shift solenoid valve B, AT-111. ☐ Overrun clutch solenoid valve, AT-116. ☐ Torque converter clutch solenoid valve, AT-120. ☐ A/T fluid temperature sensor and TCM power source, AT-125. ☐ Engine speed signal, AT-132. ☐ Line pressure solenoid valve, AT-136. ☐ Control unit (RAM), control unit (ROM), AT-142. ☐ Control unit (EEPROM), AT-144. ☐ PNP, overdrive control, A/T mode and throttle position switches, AT-189. ☐ Battery ☐ Others	
5.	☐ For self-diagnosis NG items, inspect each component. Repair or replace the damaged parts.			AT-33
6.	☐ Perform all ROAD TEST and re-mark required procedures.			AT-52
7.	☐ Perform the Diagnostic Procedures for all remaining items marked NG. Repair or replace the damaged parts. Refer to the Symptom Chart when you perform the procedures. (The chart also shows some other possible symptoms and the component inspection orders.)			AT-82 AT-70
8.	☐ Erase self-diagnosis code from TCM memories.			AT-36, AT-41

Work Flow

=NMAT0020

HOW TO PERFORM TROUBLE DIAGNOSES FOR QUICK AND ACCURATE REPAIR

NMAT0020S01

A good understanding of the malfunction conditions can make troubleshooting faster and more accurate.
In general, each customer feels differently about a problem. It is important to fully understand the symptoms or conditions for a customer complaint.
Make good use of the two sheets provided, “INFORMATION FROM CUSTOMER” (AT-43) and “DIAGNOSTIC WORKSHEET” (AT-44), to perform the best troubleshooting possible.

WORK FLOW CHART

=NMAT0020S02

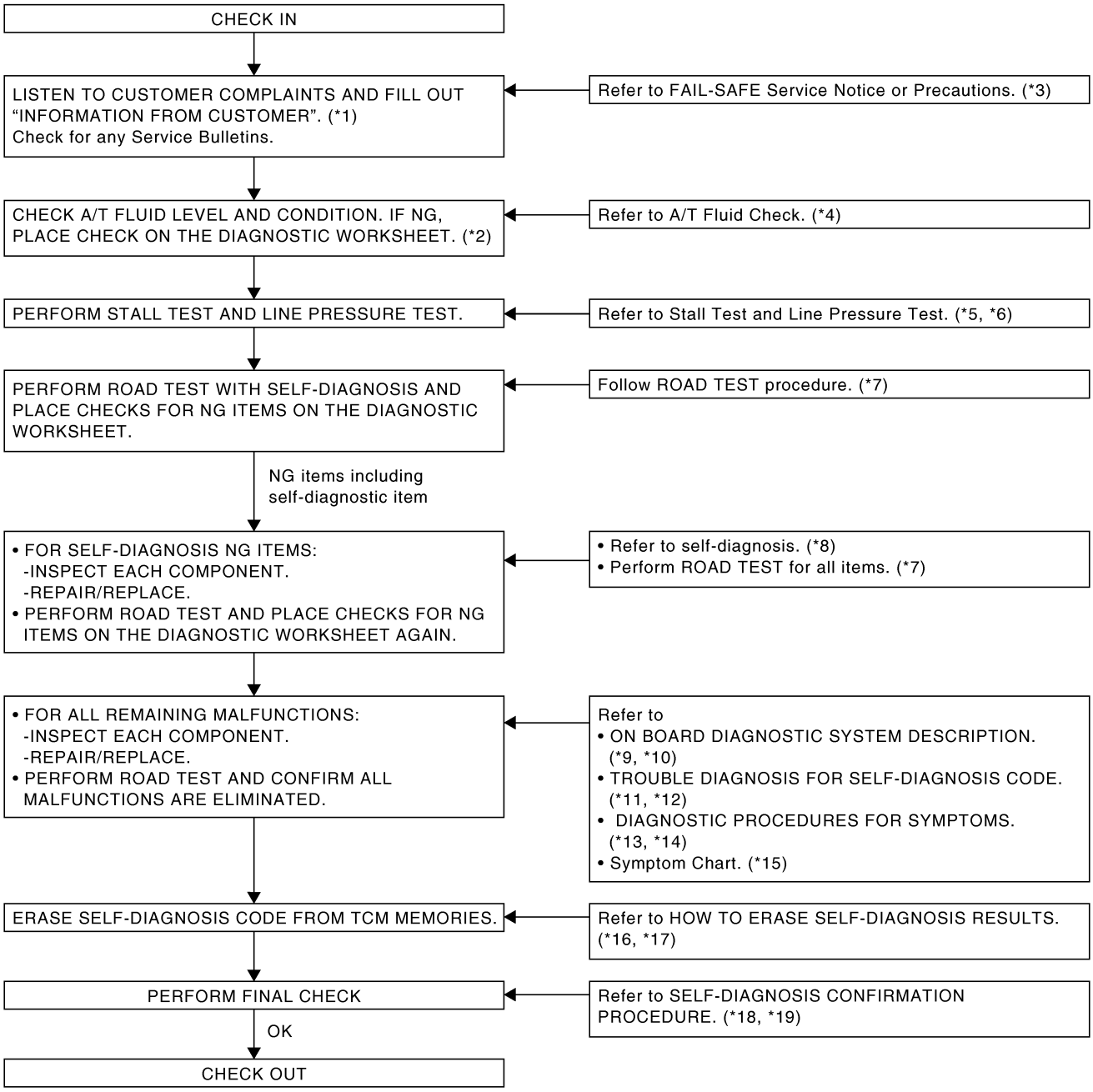

SAT731J

*1: AT-43
*2: AT-44
*3: AT-5
*4: AT-48
*5: AT-48
*6: AT-51
*7: AT-52
*8: AT-32
*9: AT-32
*10: AT-41
*11: AT-90
*12: AT-144
*13: AT-146
*14: AT-189
*15: AT-70
*16: AT-36
*17: AT-41
*18: AT-90
*19: AT-144

A/T Fluid Check

NMAT0021

FLUID LEAKAGE CHECK

NMAT0021S01

1. Clean area suspected of leaking. — for example, mating surface of converter housing and transmission case.
2. Start engine, apply foot brake, place selector lever in “D” position and wait a few minutes.
3. Stop engine.
4. Check for fresh leakage.

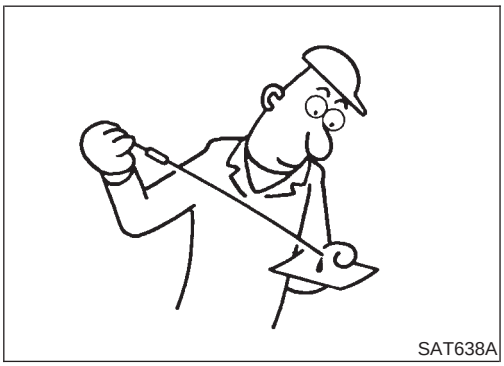
SAT638A

FLUID CONDITION CHECK

NMAT0021S02

Fluid color	Suspected problem
Dark or black with burned odor	Wear of frictional material
Milky pink	Water contamination — Road water entering through filler tube or breather
Varnished fluid, light to dark brown and tacky	Oxidation — Over or under filling, — Overheating

FLUID LEVEL CHECK

NMAT0021S03

Refer to “Checking A/T Fluid”, AT-9.

Stall Test

NMAT0022

STALL TEST PROCEDURE

NMAT0022S01

1. Check A/T fluid and engine oil levels. If necessary, add fluid and oil.
2. Drive vehicle for approx. 10 minutes or until fluid and oil reach operating temperature.

   ATF operating temperature:
   50 - 80°C (122 - 176°F)

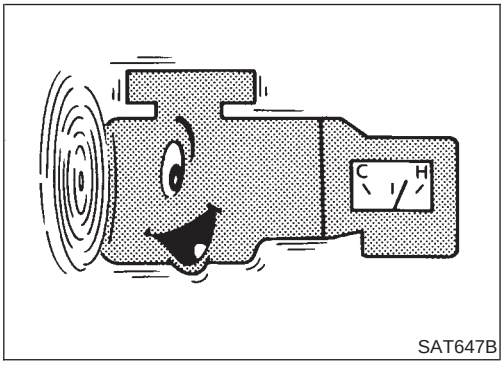

SAT647B

3. Set parking brake and block wheels.
4. Install a tachometer where it can be seen by driver during test.

- **It is good practice to put a mark on point of specified engine rpm on indicator.**

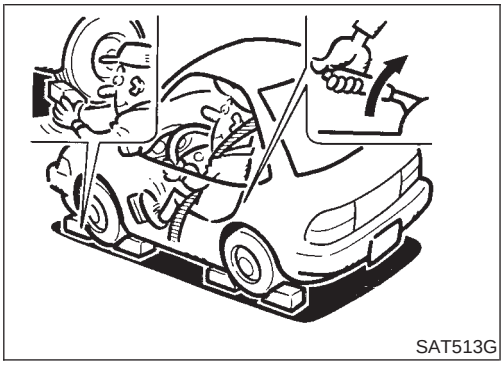
SAT513G

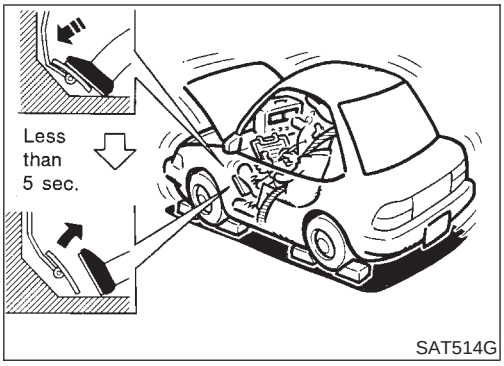

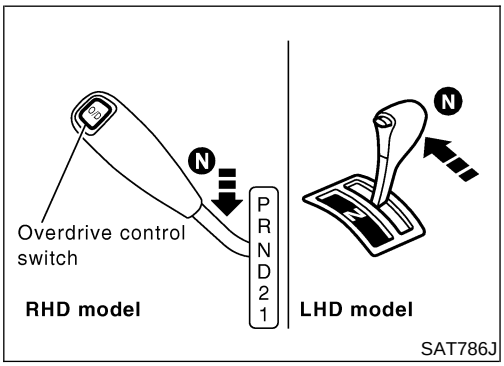

5. Start engine, apply foot brake, and place selector lever in "D" position.
6. Accelerate to wide open throttle gradually while applying foot brake.
7. Quickly note the engine stall revolution and immediately release throttle.

- **During test, never hold throttle wide open for more than 5 seconds.**

Stall revolution:
2,725 - 2,975 rpm

8. Move selector lever to "N" position.
9. Cool off ATF.

- **Run engine at idle for at least one minute.**

10. Repeat steps 5 through 9 with selector lever in "2", "1" and "R" positions.

JUDGEMENT OF STALL TEST

NMAT0022S02

The test result and possible damaged components relating to each result are shown in the illustration. In order to pinpoint the possible damaged components, follow the WORK FLOW shown in AT-46.

NOTE:

Stall revolution is too high in "D" or "2" position:

- Slippage occurs in 1st gear but not in 2nd and 3rd gears. ..... Low one-way clutch slippage
- Slippage occurs at the following gears:
  1st through 3rd gears in "D" position and engine brake functions.
  1st and 2nd gears in "2" position and engine brake functions with accelerator pedal released (fully closed throttle). ..... Forward clutch or forward one-way clutch slippage

Stall revolution is too high in "R" position:

- Engine brake does not function in "1" position. ..... Low & reverse brake slippage
- Engine brake functions in "1" position. ..... Reverse clutch slippage

Stall revolution within specifications:

- Vehicle does not achieve speed of more than 80 km/h (50 MPH). ..... One-way clutch seizure in torque converter housing

CAUTION:

Be careful since automatic fluid temperature increases abnormally.

- Slippage occurs in 3rd and 4th gears in "D" position. ..... High clutch slippage
- Slippage occurs in 2nd and 4th gear in "D" position. ..... Brake band slippage

Stall revolution less than specifications:

- Poor acceleration during starts. ..... One-way clutch seizure in torque converter

Stall Test (Cont'd)

Selector lever position	Judgement		
D	L	O	H
2	L	O	H
1	L	O	O
R	L	H	H

O : Stall revolution is normal.
H : Stall revolution is higher than specified.
L : Stall revolution is lower than specified.

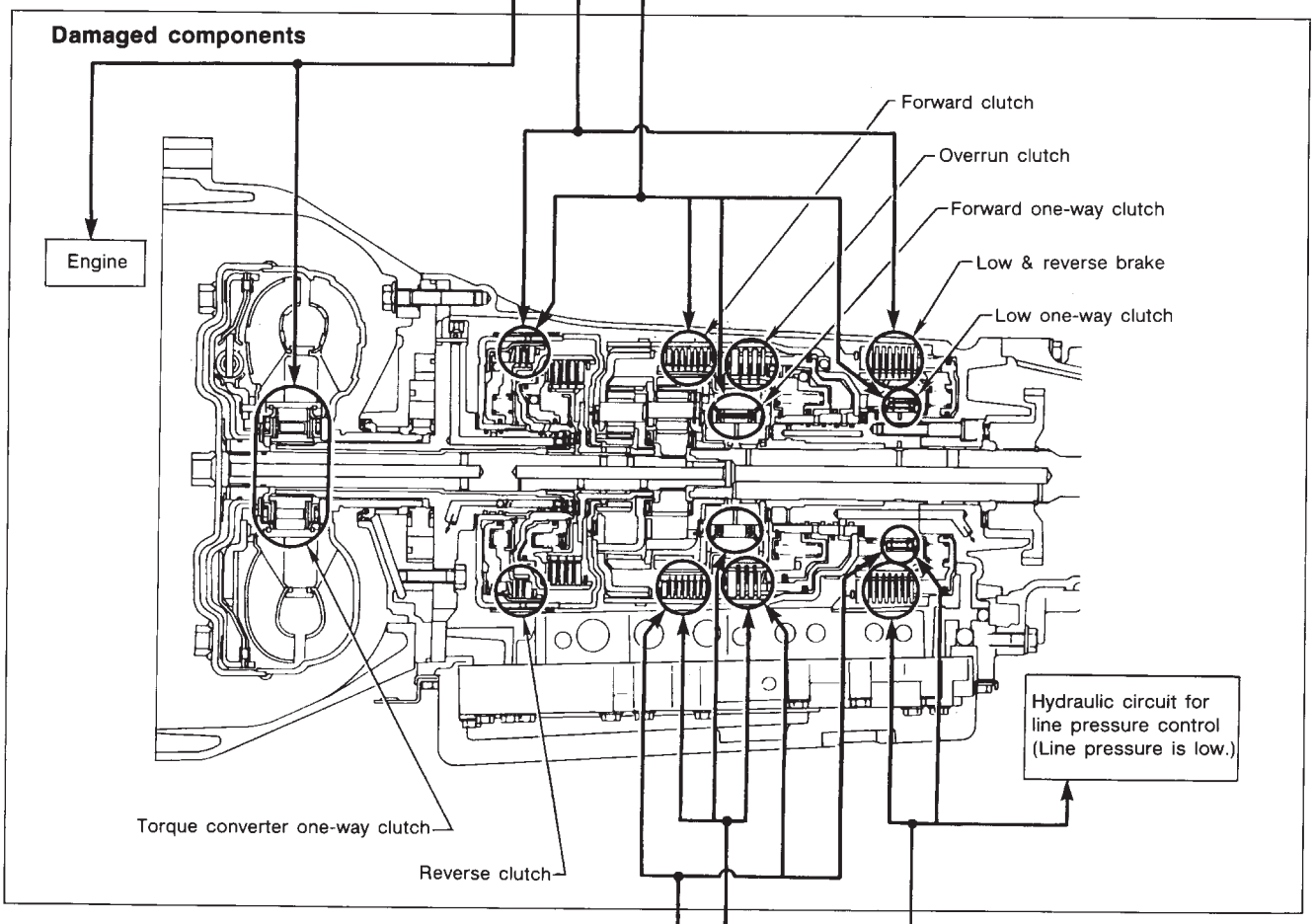

Clutches and brakes except high clutch and brake band are OK. (Condition of high clutch and brake band cannot be confirmed by stall test.)

Selector lever position	Judgement			
D	H	H	H	O
2	H	H	H	O
1	O	H	H	O
R	O	O	H	O

SAT392H

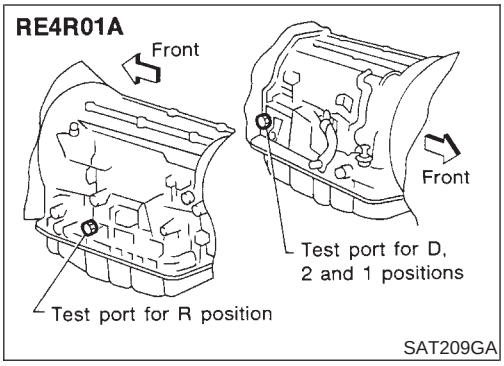

SAT209GA

Line Pressure Test

NMAT0023

- Location of line pressure test ports.
- **Always replace line pressure plugs as they are self-sealing bolts.**

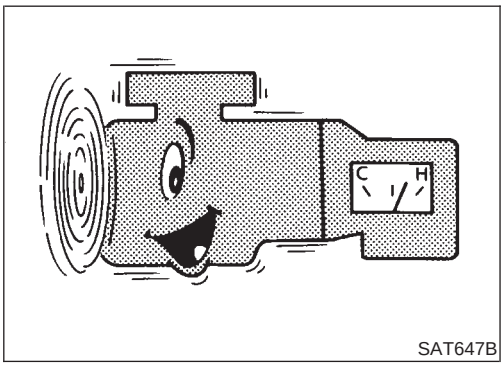

SAT647B

LINE PRESSURE TEST PROCEDURE

NMAT0023S01

1. Check A/T fluid and engine oil levels. If necessary, add fluid and oil.
2. Drive vehicle for approx. 10 minutes or until fluid and oil reach operating temperature.

   ATF operating temperature:
   50 - 80°C (122 - 176°F)

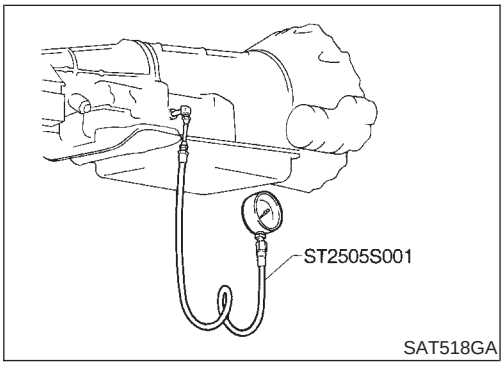

SAT518GA

3. Install pressure gauge to corresponding line pressure port.

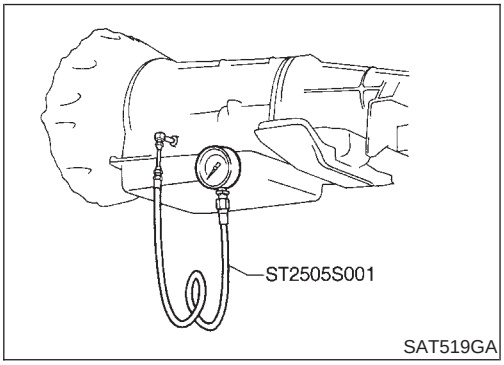

SAT519GA

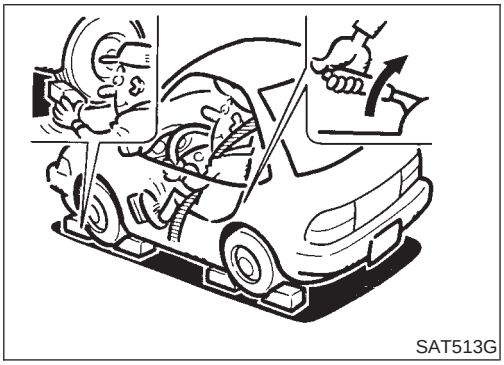
SAT513G

4. Set parking brake and block wheels.
   - **Continue to depress brake pedal fully while line pressure test is being performed at stall speed.**

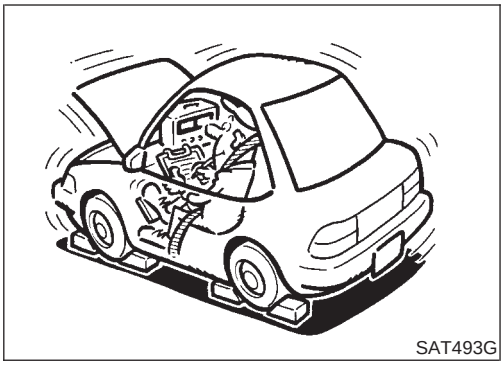
SAT493G

5. Start engine and measure line pressure at idle and stall speed.
- **When measuring line pressure at stall speed, follow the stall test procedure.**

Line pressure:
Refer to SDS, AT-288.

JUDGEMENT OF LINE PRESSURE TEST

NMAT0023S02

Judgement		Suspected parts
At idle	Line pressure is low in all positions.	• Oil pump wear • Control piston damage • Pressure regulator valve or plug sticking • Spring for pressure regulator valve damaged • Fluid pressure leakage between oil strainer and pressure regulator valve • Clogged strainer
	Line pressure is low in particular position.	• Fluid pressure leakage between manual valve and particular clutch • For example, line pressure is: — Low in "R" and "1" positions, but — Normal in "D" and "2" positions. Then, fluid leakage exists at or around low and reverse brake circuit. Refer to "CLUTCH AND BAND CHART", AT-16.
	Line pressure is high.	• Mal-adjustment of throttle position sensor • Fluid temperature sensor damaged • Line pressure solenoid valve sticking • Short circuit of line pressure solenoid valve circuit • Pressure modifier valve sticking • Pressure regulator valve or plug sticking • Open in dropping resistor circuit
At stall speed	Line pressure is low.	• Mal-adjustment of throttle position sensor • Line pressure solenoid valve sticking • Short circuit of line pressure solenoid valve circuit • Pressure regulator valve or plug sticking • Pressure modifier valve sticking • Pilot valve sticking

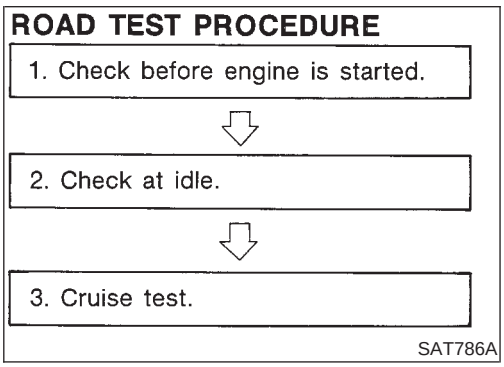

SAT786A

Road Test

NMAT0024

DESCRIPTION

NMAT0024S01

- The purpose of the test is to determine overall performance of A/T and analyze causes of problems.
- The road test consists of the following three parts:

1. Check before engine is started
2. Check at idle
3. Cruise test

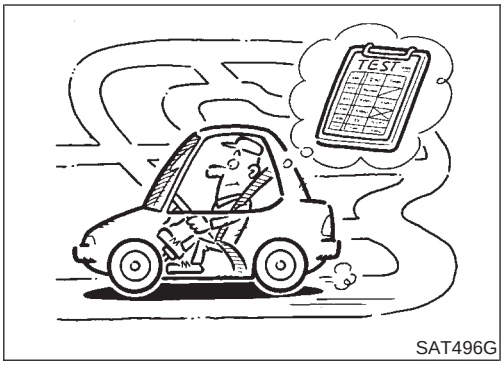

SAT496G

- Before road test, familiarize yourself with all test procedures and items to check.
- Conduct tests on all items until specified symptom is found. Troubleshoot items which check out No Good after road test. Refer to "ON BOARD DIAGNOSTIC SYSTEM DESCRIPTION" and "TROUBLE DIAGNOSES FOR SYMPTOMS", AT-32 - AT-41 and AT-146 - AT-189.

1. CHECK BEFORE ENGINE IS STARTED

NMAT0024S02

1	CHECK POWER INDICATOR LAMP STEP 1

1. Park vehicle on flat surface.
2. Move selector lever to "P" position.
3. Turn ignition switch to "OFF" position.
   Wait at least 5 seconds.
4. Set A/T mode switch in "AUTO" position.
5. Set overdrive control switch in "ON" position.
6. Turn ignition switch to "ON" position. (Do not start engine.)
7. Does POWER indicator lamp come on for about 2 seconds?

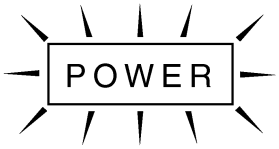

POWER indicator lamp

SAT408K

Yes or No

Yes	▶	GO TO 2.
No	▶	Go to "1. POWER Indicator Lamp Does Not Come On", AT-149.

2	CHECK POWER INDICATOR LAMP STEP 2

Does POWER indicator lamp flicker for about 8 seconds?

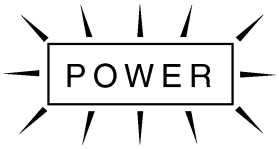

POWER indicator lamp

SAT408K

Yes or No

Yes	▶	Perform self-diagnosis. Refer to SELF-DIAGNOSIS PROCEDURE (Without CONSULT-II), AT-37.
No	▶	GO TO 3.

3	CHECK NG ITEM
1. Turn ignition switch to "OFF" position. 2. Perform self-diagnosis and note NG items. Refer to SELF-DIAGNOSIS PROCEDURE (Without CONSULT-II), AT-37.	
▶	Go to "2. Check at idle", AT-55.

2. CHECK AT IDLE

=NMAT0024S03

1	CHECK ENGINE START	
1. Park vehicle on flat surface. 2. Turn ignition switch to "OFF" position. 3. Move selector lever to "P" or "N" position. 4. Turn ignition switch to start position. 5. Is engine started?		
Yes or No		
Yes	▶	GO TO 2.
No	▶	Go to "5. Engine Cannot Be Started In "P" and "N" Position", AT-153.

2	CHECK ENGINE START	
1. Turn ignition switch to "OFF" position. 2. Move selector lever to "D", "1", "2" or "R" position. 3. Turn ignition switch to start position. 4. Is engine started?		
Yes or No		
Yes	▶	Go to "5. Engine Cannot Be Started In "P" and "N" Position", AT-153.
No	▶	GO TO 3.

3	CHECK VEHICLE MOVE	
1. Turn ignition switch to "OFF" position. 2. Move selector lever to "P" position. 3. Release parking brake. 4. Push vehicle forward or backward. 5. Does vehicle move when it is pushed forward or backward?		
Yes or No		
Yes	▶	Go to "6. In "P" Position, Vehicle Moves Forward Or Backward When Pushed", AT-154.
No	▶	GO TO 4.

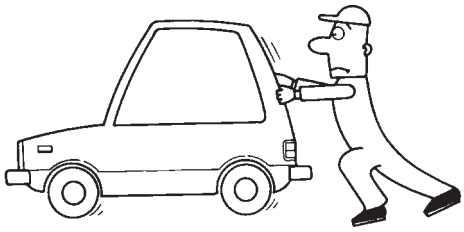

SAT796A

4	CHECK VEHICLE MOVE	
1. Apply parking brake. 2. Move selector lever to "N" position. 3. Turn ignition switch to "START" position and start engine. 4. Release parking brake. 5. Does vehicle move forward or backward?		
Yes or No		
Yes	▶	Go to "7. In "N" Position, Vehicle Moves", AT-155.
No	▶	GO TO 5.

5	CHECK SHIFT SHOCK

1. Apply foot brake.
2. Move selector lever to "R" position.
3. Is there large shock when changing from "N" to "R" position?

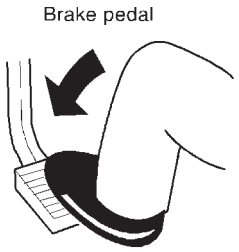

SAT082J

Yes or No

Yes	▶	Go to "8. Large Shock. "N" → "R" Position", AT-157.
No	▶	GO TO 6.

6	CHECK VEHICLE MOVE

1. Release foot brake for several seconds.
2. Does vehicle creep backward when foot brake is released?

Yes or No

Yes	▶	GO TO 7.
No	▶	Go to "9. Vehicle Does Not Creep Backward In "R" Position", AT-159.

7	CHECK VEHICLE MOVE

1. Move selector lever to "D", "2" and "1" position and check if vehicle creeps forward.
2. Does vehicle creep forward in all three positions?

Yes or No

Yes	▶	Go to "3. Cruise test", AT-56.
No	▶	Go to "10. Vehicle Does Not Creep Forward In "D", "2" Or "1" Position", AT-162.

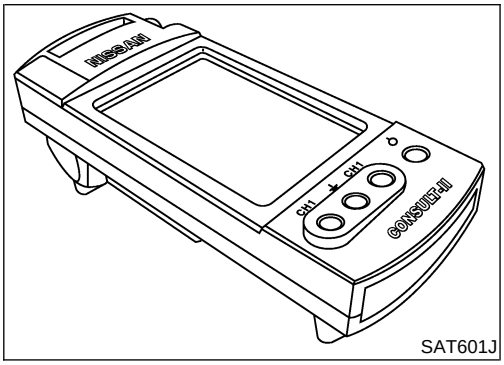

SAT601J

3. CRUISE TEST

NMAT0024S04

- Check all items listed in Parts 1 through 3.

With CONSULT-II

NMAT0024S0401

- Using CONSULT-II, conduct a cruise test and record the result.
- Print the result and ensure that shifts and lock-ups take place as per "Shift Schedule".

CONSULT-II Setting Procedure

NMAT0024S0402

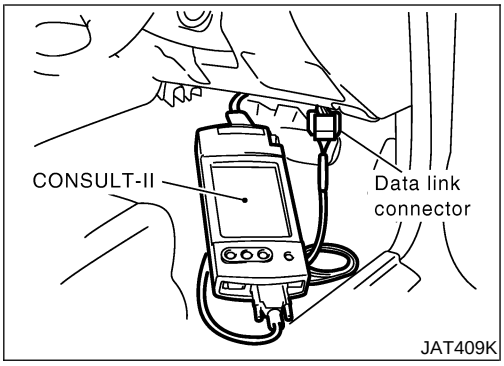

JAT409K

1. Turn ignition switch "OFF".
2. Connect "CONSULT-II" to Data link connector which is located in instrument lower panel on driver side.

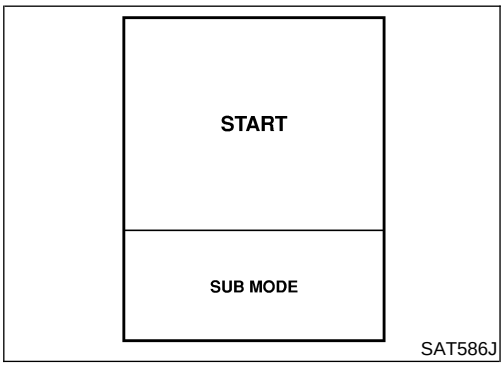

SAT586J

3. Turn ignition switch "ON".
4. Touch "START".

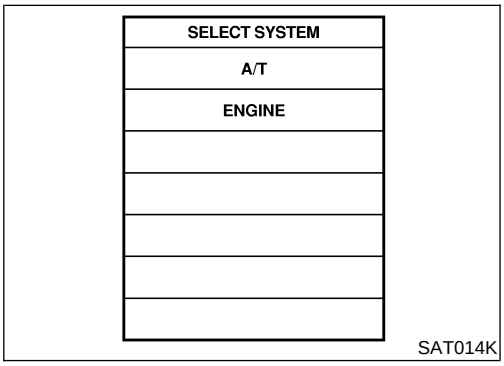

SAT014K

5. Touch "A/T".

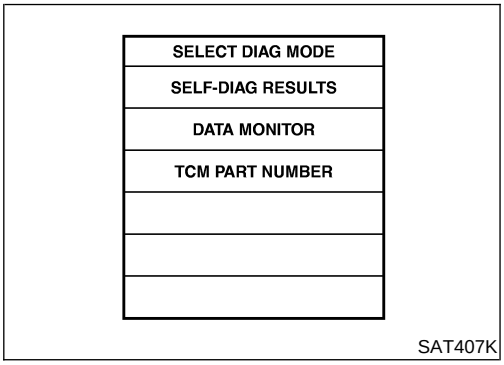

SAT407K

6. Touch "DATA MONITOR".

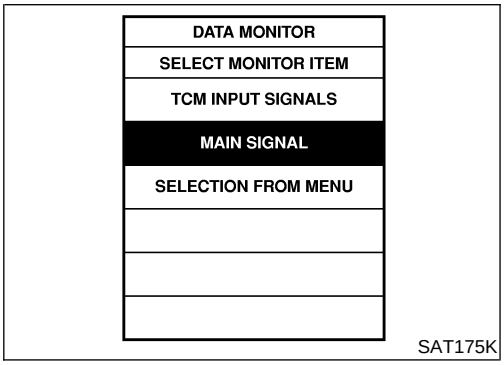

SAT175K

7. Touch "MAIN SIGNALS" or "TCM INPUT SIGNALS".
8. See "Numerical Display", "Barchart Display" or "Line Graph Display".

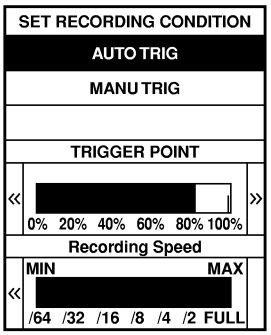

SAT973J

9. Touch "SETTING" to set recording condition ("AUTO TRIG" or "MANU TRIG") and touch "BACK".
10. Touch "START".

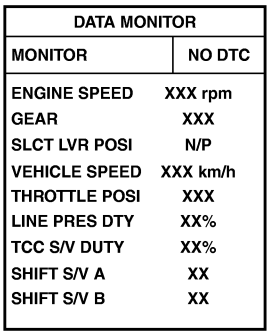

SAT134K

11. When performing cruise test, touch "RECORD".

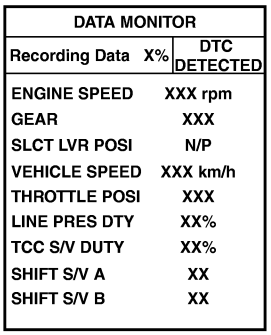

SAT135K

12. After finishing cruise test part 1, touch "STOP".

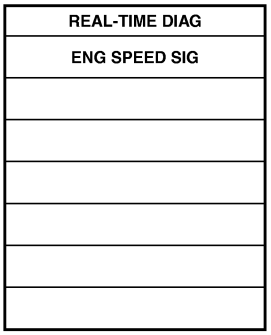

SAT987J

13. Touch "STORE" and touch "BACK".

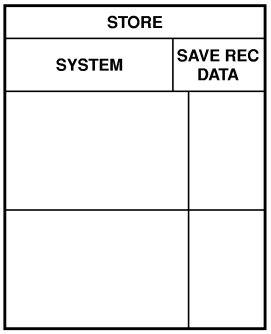

SAT974J

Trigger	VHCL S/SEN A/T	VHCL S/SEN MTR	THRTL POSI SEN
	km/h	km/h	V

SAT975J

14. Touch "DISPLAY".
15. Touch "PRINT" again.
16. Check the monitor data printed out.
17. Continue cruise test part 2 and 3.

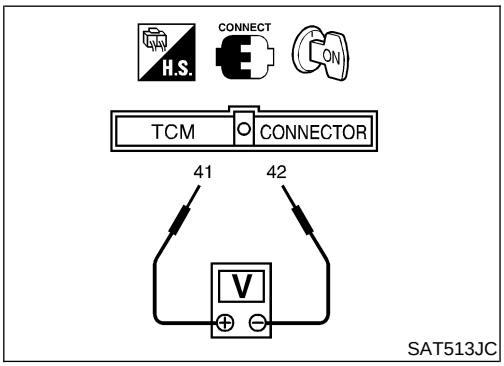

SAT513JC

Without CONSULT-II

NMAT0024S0403

- Throttle position sensor can be checked by voltage across connector M26 terminal Nos. 41 (R/Y) and 42 (GY) of TCM. Refer to "Wiring Diagram — AT — TPS", AT-100.

Cruise Test — Part 1

=NMAT0024S0404

1	CHECK STARTING GEAR (D_1) POSITION

1. Drive vehicle for approx. 10 minutes to warm engine oil and ATF up to operating temperature.
   ATF operating temperature:
   50 - 80°C (122 - 176°F)
2. Park vehicle on flat surface.
3. Set overdrive control switch to "ON" position.
4. Move selector lever to "P" position.
5. Start engine.
6. Move selector lever to "D" position.
7. Accelerate vehicle by constantly depressing accelerator pedal halfway.

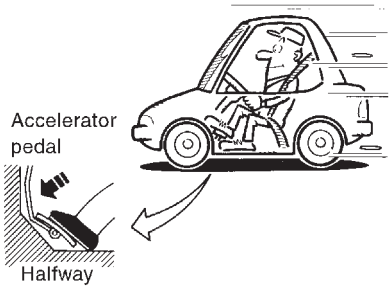

SAT953I

8. Does vehicle start from D_1?
   Read gear position.

Yes or No

Yes	▶	GO TO 2.
No	▶	Go to "11. Vehicle Cannot Be Started From D_1", AT-165.

2	CHECK SHIFT UP (D_1 TO D_2)

Does A/T shift from D_1 to D_2 at the specified speed?
Read gear position, throttle opening and vehicle speed.
Specified speed when shifting from D_1 to D_2:
Refer to Shift schedule, AT-288.

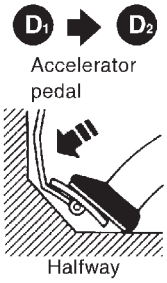

SAT954I

Yes or No

Yes	▶	GO TO 3.
No	▶	Go to "12. A/T Does Not Shift: $D_1 \rightarrow D_2$ or Does Not Kickdown: $D_4 \rightarrow D_2$", AT-168.

3	CHECK SHIFT UP (D_2 TO D_3)

Does A/T shift from D_2 to D_3 at the specified speed?

Read gear position, throttle opening and vehicle speed.

Specified speed when shifting from D_2 to D_3:

Refer to Shift schedule, AT-288.

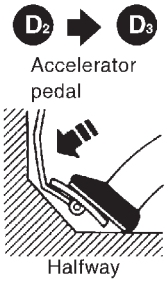

SAT955I

Yes or No

Yes	▶	GO TO 4.
No	▶	Go to "13. A/T Does Not Shift: $D_2 \rightarrow D_3$", AT-171.

4	CHECK SHIFT UP (D_3 TO D_4)

Does A/T shift from D_3 to D_4 at the specified speed?

Read gear position, throttle opening and vehicle speed.

Specified speed when shifting from D_3 to D_4:

Refer to Shift schedule, AT-288.

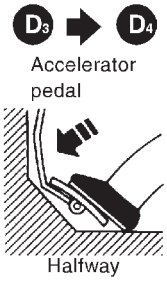

SAT956I

Yes or No

Yes	▶	GO TO 5.
No	▶	Go to "14. A/T Does Not Shift: $D_3 \rightarrow D_4$", AT-174.

5	CHECK LOCK-UP (D_4 TO D_4 L/U)

Does A/T perform lock-up at the specified speed?

Read vehicle speed, throttle position when lock-up duty becomes 94%.

Specified speed when lock-up occurs:

Refer to Shift schedule, AT-288.

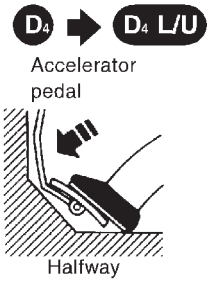

SAT957I

Yes or No

Yes	▶	GO TO 6.
No	▶	Go to "15. A/T Does Not Perform Lock-up", AT-177.

6	CHECK HOLD LOCK-UP

Does A/T hold lock-up condition for more than 30 seconds?

Yes or No

Yes	▶	GO TO 7.
No	▶	Go to "16. A/T Does Not Hold Lock-up Condition", AT-179.

7	CHECK LOCK-UP OFF (D_4 L/U TO D_4)

1. Release accelerator pedal.
2. Is lock-up released when accelerator pedal is released?

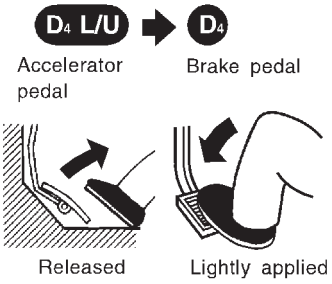

SAT958I

Yes or No

Yes	▶	GO TO 8.
No	▶	Go to "17. Lock-up Is Not Released", AT-181.

8	CHECK SHIFT DOWN (D_4 TO D_3)

1. Decelerate vehicle by applying foot brake lightly.
2. Does engine speed return to idle smoothly when A/T is shifted from D_4 to D_3?

Read gear position and engine speed.

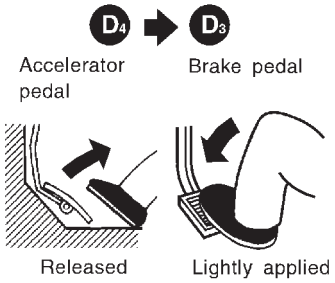

SAT959I

Yes or No

Yes	▶	1. Stop vehicle. 2. Go to "Cruise test — Part 2", AT-64.
No	▶	Go to "18. Engine Speed Does Not Return To Idle (Light Braking $D_4 \rightarrow D_3$)", AT-182.

Cruise Test — Part 2

=NMAT0024S0405

1	CHECK STARTING GEAR (D_1) POSITION

1. Confirm overdrive control switch is in "ON" position.
2. Confirm selector lever is in "D" position.
3. Accelerate vehicle by half throttle again.
4. Does vehicle start from D_1?

Read gear position.

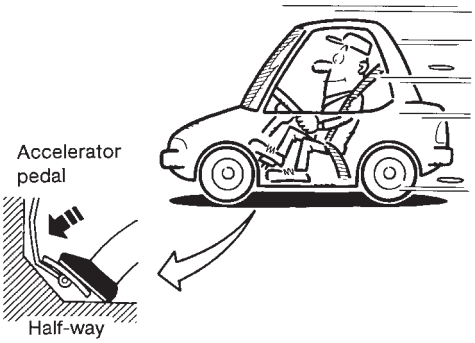

SAT495G

Yes or No

Yes	▶	GO TO 2.
No	▶	Go to "19. Vehicle Does Not Start From D_1", AT-184.

2	CHECK SHIFT UP AND SHIFT DOWN (D_3 TO D_4 TO D_2)

1. Accelerate vehicle to 80 km/h (50 MPH) as shown in illustration.
2. Release accelerator pedal and then quickly depress it fully.
3. Does A/T shift from D_4 to D_2 as soon as accelerator pedal is depressed fully?

Read gear position and throttle position.

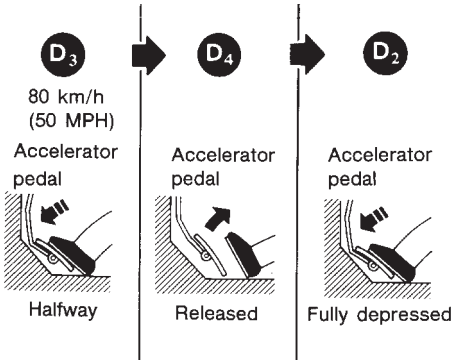

SAT404H

Yes or No

Yes	▶	GO TO 3.
No	▶	Go to "12. A/T Does Not Shift: $D_3 \rightarrow D_4$ Or Does Not Kickdown: $D_4 \rightarrow D_2$", AT-168.

3	CHECK SHIFT UP (D_2 TO D_3)

Does A/T shift from D_2 to D_3 at the specified speed?

Read gear position, throttle position and vehicle speed.

Specified speed when shifting from D_2 to D_3:

Refer to Shift schedule, AT-288.

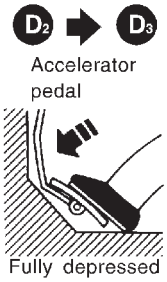

SAT960I

Yes or No

Yes	▶	GO TO 4.
No	▶	Go to "13. A/T Does Not Shift: $D_2 \rightarrow D_3$", AT-171.

4	CHECK SHIFT UP (D_3 TO D_4) AND ENGINE BRAKE

Release accelerator pedal after shifting from D_2 to D_3.

Does A/T shift from D_3 to D_4 and does vehicle decelerate by engine brake?

Read gear position, throttle position and vehicle speed.

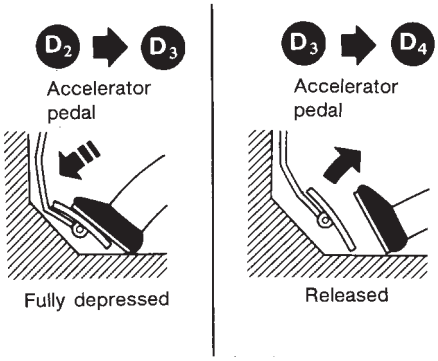

SAT405H

Yes or No

Yes	▶	1. Stop vehicle. 2. Go to "Cruise test — Part 3", AT-66.
No	▶	Go to "14. A/T Does Not Shift: $D_3 \rightarrow D_4$", AT-174.

Cruise Test — Part 3

=NMAT0024S0406

1	VEHICLE SPEED D_4 POSITION

1. Confirm overdrive control switch is in "ON" position.
2. Confirm selector lever is in "D" position.
3. Accelerate vehicle using half-throttle to D_4.

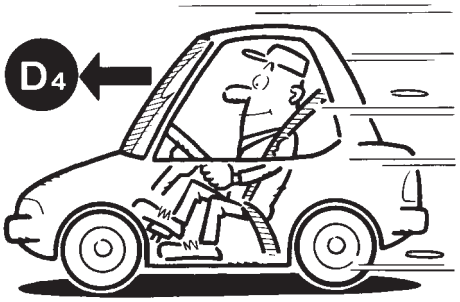

SAT812A

▶	GO TO 2.

2	CHECK SHIFT DOWN (D_4 TO D_3)

1. Release accelerator pedal.
2. Set overdrive control switch to "OFF" position while driving in D_4.
3. Does A/T shift from D_4 to D_3 (O/D OFF)?

Read gear position and vehicle speed.

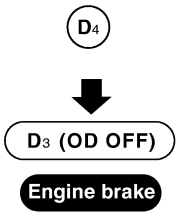

SAT410K

Yes or No

Yes	▶	GO TO 3.
No	▶	Go to "20. A/T Does Not Shift: $D_4 \rightarrow D_3$, When Overdrive Control Switch "ON" → "OFF", AT-185.

3	CHECK ENGINE BRAKE

Does vehicle decelerate by engine brake?

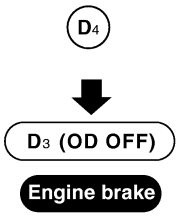

SAT410K

Yes or No

Yes	▶	GO TO 4.
No	▶	Go to "18. Engine Speed Does Not Return To Idle (Light Braking $D_4 \rightarrow D_3$)", AT-182.

4	CHECK SHIFT DOWN (D_3 TO D_2)

1. Move selector lever from "D" to "2" position while driving in D_3 (O/D OFF).
2. Does A/T shift from D_3 (O/D OFF) to 2_2?

Read gear position.

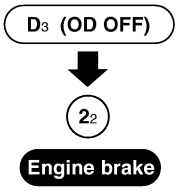

SAT411K

Yes or No

Yes	▶	GO TO 5.
No	▶	Go to "21. A/T Does Not Shift: $D_3 \rightarrow D_2$, When Selector Lever "D" → "2" Position", AT-186.

5	CHECK ENGINE BRAKE

Does vehicle decelerate by engine brake?

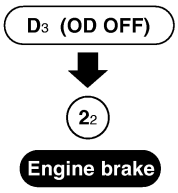

SAT411K

Yes or No

Yes	▶	GO TO 6.
No	▶	Go to "18. Engine Speed Does Not Return To Idle (Light Braking $D_4 \rightarrow D_3$)", AT-182.

6	CHECK SHIFT DOWN (2_2 TO 1_1)

1. Move selector lever from "2" to "1" position while driving in 2_2.
2. Does A/T shift from 2_2 to 1_1 position?

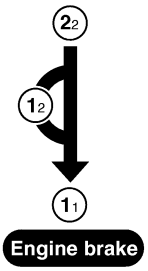

SAT412K

Yes or No

Yes	▶	GO TO 7.
No	▶	Go to "22. A/T Does Not Shift: $2_2 \rightarrow 1_1$, When Selector lever "2" → "1" Position", AT-187.

7	CHECK ENGINE BRAKE
Does vehicle decelerate by engine brake? 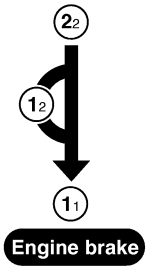 SAT412K	
Yes or No	
Yes ▶	1. Stop vehicle. 2. Perform self-diagnosis. Refer to SELF-DIAGNOSTIC PROCEDURE (Without CONSULT-II), AT-37.
No ▶	Go to "23. Vehicle Does Not Decelerate By Engine Brake", AT-188.

Symptom Chart

NMAT0256

Numbers are arranged in order of inspection.
Perform inspections starting with number one and work up.

Items	Symptom	Condition	Diagnostic Item	Reference Page
No Lock-up Engagement/TCC Inoperative	Torque converter is not locked up.	ON vehicle	1. Throttle position sensor (Adjustment)	EC-50, “Basic Inspection”.
			2. Vehicle speed sensor·A/T (Revolution sensor) and vehicle speed sensor·MTR	AT-89, 95
			3. Park/neutral position (PNP) switch adjustment	AT-206
			4. Engine speed signal	AT-132
			5. A/T fluid temperature sensor	AT-125
			6. Line pressure test	AT-51
			7. Torque converter clutch solenoid valve	AT-120
			8. Control valve assembly	AT-205
		OFF vehicle	9. Torque converter	AT-215
	Torque converter clutch piston slip.	ON vehicle	1. Fluid level	AT-9
			2. Throttle position sensor (Adjustment)	EC-50, “Basic Inspection”.
			3. Line pressure test	AT-51
			4. Torque converter clutch solenoid valve	AT-120
			5. Line pressure solenoid valve	AT-136
			6. Control valve assembly	AT-205
		OFF vehicle	7. Torque converter	AT-215
	Lock-up point is extremely high or low. AT-177	ON vehicle	1. Throttle position sensor (Adjustment)	EC-50, “Basic Inspection”.
			2. Vehicle speed sensor·A/T (Revolution sensor) and vehicle speed sensor·MTR	AT-89, 95
			3. Torque converter clutch solenoid valve	AT-120
			4. Control valve assembly	AT-205
Shift Shock	Sharp shock in shifting from N to D position.	ON vehicle	1. Engine idling rpm	EC-50, “Basic Inspection”.
			2. Throttle position sensor (Adjustment)	EC-50, “Basic Inspection”.
			3. Line pressure test	AT-51
			4. A/T fluid temperature sensor	AT-125
			5. Engine speed signal	AT-132
			6. Line pressure solenoid valve	AT-136
			7. Control valve assembly	AT-205
			8. Accumulator N-D	AT-205
		OFF vehicle	9. Forward clutch	AT-249

Symptom Chart (Cont'd)

Items	Symptom	Condition	Diagnostic Item	Reference Page
Shift Shock	Too sharp a shock in change from D_1 to D_2.	ON vehicle	1. Throttle position sensor (Adjustment)	EC-50, "Basic Inspection".
			2. Line pressure test	AT-51
			3. Accumulator servo release	AT-205
			4. Control valve assembly	AT-205
			5. A/T fluid temperature sensor	AT-125
		OFF vehicle	6. Brake band	AT-262
	Too sharp a shock in change from D_2 to D_3.	ON vehicle	1. Throttle position sensor (Adjustment)	EC-50, "Basic Inspection".
			2. Line pressure test	AT-51
			3. Control valve assembly	AT-205
		OFF vehicle	4. High clutch	AT-246
			5. Brake band	AT-262
	Too sharp a shock in change from D_3 to D_4.	ON vehicle	1. Throttle position sensor (Adjustment)	EC-50, "Basic Inspection".
			2. Line pressure test	AT-51
			3. Control valve assembly	AT-205
		OFF vehicle	4. Brake band	AT-262
			5. Overrun clutch	AT-249
	Gear change shock felt during deceleration by releasing accelerator pedal.	ON vehicle	1. Throttle position sensor (Adjustment)	EC-50, "Basic Inspection".
			2. Line pressure test	AT-51
			3. Overrun clutch solenoid valve	AT-116
			4. Control valve assembly	AT-205
	Large shock changing from 1_2 to 1_1 in 1 position.	ON vehicle	1. Control valve assembly	AT-205
		ON vehicle	2. Low & reverse brake	AT-253

Symptom Chart (Cont'd)

Items	Symptom	Condition	Diagnostic Item	Reference Page
Improper Shift Timing	Too high a gear change point from D_1 to D_2, from D_2 to D_3, from D_3 to D_4. AT-168, 171, 174	ON vehicle	1. Throttle position sensor (Adjustment)	EC-50, "Basic Inspection".
			2. Vehicle speed sensor·A/T (Revolution sensor) and vehicle speed sensor·MTR	AT-89, 95
			3. Shift solenoid valve A	AT-106
			4. Shift solenoid valve B	AT-111
	Gear change directly from D_1 to D_3 occurs.	ON vehicle	1. Fluid level	AT-9
			2. Accumulator servo release	AT-205
		OFF vehicle	3. Brake band	AT-262
	Too high a change point from D_4 to D_3, from D_3 to D_2, from D_2 to D_1.	ON vehicle	1. Throttle position sensor (Adjustment)	EC-50, "Basic Inspection".
			2. Vehicle speed sensor·A/T (Revolution sensor) and vehicle speed sensor·MTR	AT-89, 95
	Kickdown does not operate when depressing pedal in D_4 within kickdown vehicle speed.	ON vehicle	1. Throttle position sensor (Adjustment)	EC-50, "Basic Inspection".
			2. Vehicle speed sensor·A/T (Revolution sensor) and vehicle speed sensor·MTR	AT-89, 95
			3. Shift solenoid valve A	AT-106
			4. Shift solenoid valve B	AT-111
	Kickdown operates or engine overruns when depressing pedal in D_4 beyond kickdown vehicle speed limit.	ON vehicle	1. Vehicle speed sensor·A/T (Revolution sensor) and vehicle speed sensor·MTR	AT-89, 95
			2. Throttle position sensor (Adjustment)	EC-50, "Basic Inspection".
			3. Shift solenoid valve A	AT-106
			4. Shift solenoid valve B	AT-111
	Gear change from 2_2 to 2_3 in 2 position.	ON vehicle	1. Park/neutral position (PNP) switch adjustment	AT-206
	Gear change from 1_1 to 1_2 in 1 position.	ON vehicle	1. Park/neutral position (PNP) switch adjustment	AT-206
			2. Manual control linkage adjustment	AT-207

Symptom Chart (Cont'd)

Items	Symptom	Condition	Diagnostic Item	Reference Page
No Down Shift	Failure to change gear from D_4 to D_3.	ON vehicle	1. Fluid level	AT-9
			2. Throttle position sensor (Adjustment)	EC-50, "Basic Inspection".
			3. Overrun clutch solenoid valve	AT-116
			4. Shift solenoid valve A	AT-106
			5. Line pressure solenoid valve	AT-136
			6. Control valve assembly	AT-205
		OFF vehicle	7. Low & reverse brake	AT-253
			8. Overrun clutch	AT-249
	Failure to change gear from D_3 to D_2 or from D_4 to D_2.	ON vehicle	1. Fluid level	AT-9
			2. Throttle position sensor (Adjustment)	EC-50, "Basic Inspection".
			3. Shift solenoid valve A	AT-106
			4. Shift solenoid valve B	AT-111
			5. Control valve assembly	AT-205
		OFF vehicle	6. High clutch	AT-246
			7. Brake band	AT-262
	Failure to change gear from D_2 to D_1 or from D_3 to D_1.	ON vehicle	1. Fluid level	AT-9
			2. Throttle position sensor (Adjustment)	EC-50, "Basic Inspection".
			3. Shift solenoid valve A	AT-106
			4. Shift solenoid valve B	AT-111
			5. Control valve assembly	AT-205
		OFF vehicle	6. Low one-way clutch	AT-257
			7. High clutch	AT-246
			8. Brake band	AT-262

Symptom Chart (Cont'd)

Items	Symptom	Condition	Diagnostic Item	Reference Page
No Down Shift	Failure to change from D_3 to 2_2 when changing lever into 2 position. AT-182	ON vehicle	1. Park/neutral position (PNP) switch adjustment	AT-206
			2. Throttle position sensor (Adjustment)	EC-50, "Basic Inspection".
			3. Overrun clutch solenoid valve	AT-116
			4. Shift solenoid valve B	AT-111
			5. Shift solenoid valve A	AT-106
			6. Control valve assembly	AT-205
			7. Manual control linkage adjustment	AT-207
		OFF vehicle	8. Brake band	AT-262
			9. Overrun clutch	AT-249
	Does not change from 1_2 to 1_1 in 1 position.	ON vehicle	1. Park/neutral position (PNP) switch adjustment	AT-206
			2. Vehicle speed sensor·A/T (Revolution sensor) and vehicle speed sensor·MTR	AT-89, 95
			3. Shift solenoid valve A	AT-106
			4. Control valve assembly	AT-205
			5. Overrun clutch solenoid valve	AT-116
		OFF vehicle	6. Overrun clutch	AT-249
			7. Low & reverse brake	AT-253
No Up Shift	Failure to change gear from D_1 to D_2.	ON vehicle	1. Park/neutral position (PNP) switch adjustment	AT-206
			2. Manual control linkage adjustment	AT-207
			3. Shift solenoid valve A	AT-106
			4. Control valve assembly	AT-205
			5. Vehicle speed sensor·A/T (Revolution sensor) and vehicle speed sensor·MTR	AT-89, 95
		OFF vehicle	6. Brake band	AT-262
	Failure to change gear from D_2 to D_3.	ON vehicle	1. Park/neutral position (PNP) switch adjustment	AT-206
			2. Manual control linkage adjustment	AT-207
			3. Shift solenoid valve B	AT-111
			4. Control valve assembly	AT-205
			5. Vehicle speed sensor·A/T (Revolution sensor) and vehicle speed sensor·MTR	AT-89, 95
		OFF vehicle	6. High clutch	AT-246
			7. Brake band	AT-262

Symptom Chart (Cont'd)

Items	Symptom	Condition	Diagnostic Item	Reference Page
No Up Shift	Failure to change gear from D_3 to D_4.	ON vehicle	1. Park/neutral position (PNP) switch adjustment	AT-206
			2. Manual control linkage adjustment	AT-207
			3. Shift solenoid valve A	AT-106
			4. Vehicle speed sensor·A/T (Revolution sensor) and vehicle speed sensor·MTR	AT-89, 95
			5. A/T fluid temperature sensor	AT-125
		OFF vehicle	6. Brake band	AT-262
	A/T does not shift to D_4 when driving with overdrive control switch ON.	ON vehicle	1. Throttle position sensor (Adjustment)	EC-50, "Basic Inspection".
			2. Park/neutral position (PNP) switch adjustment	AT-206
			3. Vehicle speed sensor·A/T (Revolution sensor) and vehicle speed sensor·MTR	AT-89, 95
			4. Shift solenoid valve A	AT-106
			5. Overrun clutch solenoid valve	AT-116
			6. Control valve assembly	AT-205
			7. A/T fluid temperature sensor	AT-125
			8. Line pressure solenoid valve	AT-136
		OFF vehicle	9. Brake band	AT-262
			10. Overrun clutch	AT-249
Slips/Will Not Engage	Vehicle will not run in R position (but runs in D, 2 and 1 positions). Clutch slips. Very poor acceleration. AT-159	ON vehicle	1. Manual control linkage adjustment	AT-207
			2. Line pressure test	AT-51
			3. Line pressure solenoid valve	AT-136
			4. Control valve assembly	AT-205
		OFF vehicle	5. Reverse clutch	AT-243
			6. High clutch	AT-246
			7. Forward clutch	AT-249
			8. Overrun clutch	AT-249
			9. Low & reverse brake	AT-253
	Vehicle will not run in D and 2 positions (but runs in 1 and R positions).	ON vehicle	1. Manual control linkage adjustment	AT-207
		OFF vehicle	2. Low one-way clutch	AT-257

Symptom Chart (Cont'd)

Items	Symptom	Condition	Diagnostic Item	Reference Page
Slips/Will Not Engage	Vehicle will not run in D, 1, 2 positions (but runs in R position). Clutch slips. Very poor acceleration. AT-162	ON vehicle	1. Fluid level	AT-9
			2. Line pressure test	AT-51
			3. Line pressure solenoid valve	AT-136
			4. Control valve assembly	AT-205
			5. Accumulator N-D	AT-205
		OFF vehicle	6. Reverse clutch	AT-243
			7. High clutch	AT-246
			8. Forward clutch	AT-249
			9. Forward one-way clutch	AT-259
			10. Low one-way clutch	AT-257
	Clutches or brakes slip somewhat in starting.	ON vehicle	1. Fluid level	AT-9
			2. Manual control linkage adjustment	AT-207
			3. Throttle position sensor (Adjustment)	EC-50, "Basic Inspection".
			4. Line pressure test	AT-51
			5. Line pressure solenoid valve	AT-136
			6. Control valve assembly	AT-205
			7. Accumulator N-D	AT-205
		OFF vehicle	8. Forward clutch	AT-249
			9. Reverse clutch	AT-243
			10. Low & reverse brake	AT-253
			11. Oil pump	AT-226
			12. Torque converter	AT-215
	No creep at all. AT-159, 162	ON vehicle	1. Fluid level	AT-9
			2. Line pressure test	AT-51
			3. Control valve assembly	AT-205
		OFF vehicle	4. Forward clutch	AT-249
			5. Oil pump	AT-226
			6. Torque converter	AT-215
	Almost no shock or clutches slipping in change from D_1 to D_2.	ON vehicle	1. Fluid level	AT-9
			2. Throttle position sensor (Adjustment)	EC-50, "Basic Inspection".
			3. Line pressure test	AT-51
			4. Accumulator servo release	AT-205
			5. Control valve assembly	AT-205
		OFF vehicle	6. Brake band	AT-262

Symptom Chart (Cont'd)

Items	Symptom	Condition	Diagnostic Item	Reference Page
Slips/Will Not Engage	Almost no shock or slipping in change from D_2 to D_3.	ON vehicle	1. Fluid level	AT-9
			2. Throttle position sensor (Adjustment)	EC-50, "Basic Inspection".
			3. Line pressure test	AT-51
			4. Control valve assembly	AT-205
		OFF vehicle	5. High clutch	AT-246
			6. Forward clutch	AT-249
	Almost no shock or slipping in change from D_3 to D_4.	ON vehicle	1. Fluid level	AT-9
			2. Throttle position sensor (Adjustment)	EC-50, "Basic Inspection".
			3. Line pressure test	AT-51
			4. Control valve assembly	AT-205
		OFF vehicle	5. High clutch	AT-246
			6. Brake band	AT-262
	Races extremely fast or slips in changing from D_4 to D_3 when depressing pedal.	ON vehicle	1. Fluid level	AT-9
			2. Throttle position sensor (Adjustment)	EC-50, "Basic Inspection".
			3. Line pressure test	AT-51
			4. Line pressure solenoid valve	AT-136
			5. Control valve assembly	AT-205
		OFF vehicle	6. High clutch	AT-246
			7. Forward clutch	AT-249
	Races extremely fast or slips in changing from D_4 to D_2 when depressing pedal.	ON vehicle	1. Fluid level	AT-9
			2. Throttle position sensor (Adjustment)	EC-50, "Basic Inspection".
			3. Line pressure test	AT-51
			4. Line pressure solenoid valve	AT-136
			5. Shift solenoid valve A	AT-106
			6. Control valve assembly	AT-205
		OFF vehicle	7. Brake band	AT-262
			8. Forward clutch	AT-249

Symptom Chart (Cont'd)

Items	Symptom	Condition	Diagnostic Item	Reference Page
Slips/Will Not Engage	Races extremely fast or slips in changing from D_3 to D_2 when depressing pedal.	ON vehicle	1. Fluid level	AT-9
			2. Throttle position sensor (Adjustment)	EC-50, "Basic Inspection".
			3. Line pressure test	AT-51
			4. Line pressure solenoid valve	AT-136
			5. Control valve assembly	AT-205
			6. A/T fluid temperature sensor	AT-125
		OFF vehicle	7. Brake band	AT-262
			8. Forward clutch	AT-249
			9. High clutch	AT-246
	Races extremely fast or slips in changing from D_4 or D_3 to D_1 when depressing pedal.	ON vehicle	1. Fluid level	AT-9
			2. Throttle position sensor (Adjustment)	EC-50, "Basic Inspection".
			3. Line pressure test	AT-51
			4. Line pressure solenoid valve	AT-136
			5. Control valve assembly	AT-205
		OFF vehicle	6. Forward clutch	AT-249
			7. Forward one-way clutch	AT-259
			8. Low one-way clutch	AT-257
	Vehicle will not run in any position.	ON vehicle	1. Fluid level	AT-9
			2. Manual control linkage adjustment	AT-207
			3. Line pressure test	AT-51
			4. Line pressure solenoid valve	AT-136
		OFF vehicle	5. Oil pump	AT-226
			6. High clutch	AT-246
			7. Brake band	AT-262
			8. Low & reverse brake	AT-253
			9. Torque converter	AT-215
			10. Parking pawl components	AT-206
NOT USED	Engine cannot be started in P and N positions. AT-153	ON vehicle	1. Ignition switch and starter	EL-7, "Schematic", and SC-12, "System Description".
			2. Manual control linkage adjustment	AT-207
			3. Park/neutral position (PNP) switch adjustment	AT-206
	Engine starts in positions other than P and N. AT-153	ON vehicle	1. Manual control linkage adjustment	AT-207
			2. Park/neutral position (PNP) switch adjustment	AT-206

Symptom Chart (Cont'd)

Items	Symptom	Condition	Diagnostic Item	Reference Page
NOT USED	Transmission noise in P and N positions.	ON vehicle	1. Fluid level	AT-9
			2. Line pressure test	AT-51
			3. Throttle position sensor (Adjustment)	EC-50, "Basic Inspection".
			4. Vehicle speed sensor·A/T (Revolution sensor) and vehicle speed sensor·MTR	AT-89, 95
			5. Engine speed signal	AT-132
		OFF vehicle	6. Oil pump	AT-226
			7. Torque converter	AT-215
	Vehicle moves when changing into P position or parking gear does not disengage when shifted out of P position. AT-154	ON vehicle	1. Manual control linkage adjustment	AT-207
		OFF vehicle	2. Parking pawl components	AT-206
	Vehicle runs in N position. AT-155	ON vehicle	1. Manual control linkage adjustment	AT-207
		OFF vehicle	2. Forward clutch	AT-249
			3. Reverse clutch	AT-243
			4. Overrun clutch	AT-249
	Vehicle braked when shifting into R position.	ON vehicle	1. Fluid level	AT-9
			2. Manual control linkage adjustment	AT-207
			3. Line pressure test	AT-51
			4. Line pressure solenoid valve	AT-136
			5. Control valve assembly	AT-205
		OFF vehicle	6. High clutch	AT-246
			7. Brake band	AT-262
			8. Forward clutch	AT-249
			9. Overrun clutch	AT-249
	Excessive creep.	ON vehicle	1. Engine idling rpm	EC-50, "Basic Inspection".
	Engine stops when shifting lever into R, D, 2 and 1.	ON vehicle	1. Engine idling rpm	EC-50, "Basic Inspection".
			2. Torque converter clutch solenoid valve	AT-120
			3. Control valve assembly	AT-205
		OFF vehicle	4. Torque converter	AT-215
	Vehicle braked by gear change from D_1 to D_2.	ON vehicle	1. Fluid level	AT-9
		OFF vehicle	2. Reverse clutch	AT-243
			3. Low & reverse brake	AT-253
			4. High clutch	AT-246
			5. Low one-way clutch	AT-257

Symptom Chart (Cont'd)

Items	Symptom	Condition	Diagnostic Item	Reference Page
NOT USED	Vehicle braked by gear change from D_2 to D_3.	ON vehicle	1. Fluid level	AT-9
		OFF vehicle	2. Brake band	AT-262
	Vehicle braked by gear change from D_3 to D_4.	ON vehicle	1. Fluid level	AT-9
		OFF vehicle	2. Overrun clutch	AT-249
			3. Forward one-way clutch	AT-259
			4. Reverse clutch	AT-243
	Maximum speed not attained. Acceleration poor.	ON vehicle	1. Fluid level	AT-9
			2. Park/neutral position (PNP) switch adjustment	AT-206
			3. Shift solenoid valve A	AT-106
			4. Shift solenoid valve B	AT-111
			5. Control valve assembly	AT-205
		OFF vehicle	6. Reverse clutch	AT-243
			7. High clutch	AT-246
			8. Brake band	AT-262
			9. Low & reverse brake	AT-253
			10. Oil pump	AT-226
			11. Torque converter	AT-215
	Transmission noise in D, 2, 1 and R positions.	ON vehicle	1. Fluid level	AT-9
		ON vehicle	2. Torque converter	AT-215
	Engine brake does not operate in "1" position. AT-184	ON vehicle	1. Park/neutral position (PNP) switch adjustment	AT-206
			2. Manual control linkage adjustment	AT-207
			3. Throttle position sensor (Adjustment)	EC-50, "Basic Inspection".
			4. Vehicle speed sensor·A/T (Revolution sensor) and vehicle speed sensor·MTR	AT-89, 95
			5. Shift solenoid valve A	AT-106
			6. Control valve assembly	AT-205
			7. Overrun clutch solenoid valve	AT-116
		OFF vehicle	8. Overrun clutch	AT-249
			9. Low & reverse brake	AT-253

Symptom Chart (Cont'd)

Items	Symptom	Condition	Diagnostic Item	Reference Page
NOT USED	Transmission overheats.	ON vehicle	1. Fluid level	AT-9
			2. Engine idling rpm	EC-50, "Basic Inspection".
			3. Throttle position sensor (Adjustment)	EC-50, "Basic Inspection".
			4. Line pressure test	AT-51
			5. Line pressure solenoid valve	AT-136
			6. Control valve assembly	AT-205
		OFF vehicle	7. Oil pump	AT-226
			8. Reverse clutch	AT-243
			9. High clutch	AT-246
			10. Brake band	AT-262
			11. Forward clutch	AT-249
			12. Overrun clutch	AT-249
			13. Low & reverse brake	AT-253
			14. Torque converter	AT-215
	ATF shoots out during operation. White smoke emitted from exhaust pipe during operation.	ON vehicle	1. Fluid level	AT-9
		OFF vehicle	2. Reverse clutch	AT-243
			3. High clutch	AT-246
			4. Brake band	AT-262
			5. Forward clutch	AT-249
			6. Overrun clutch	AT-249
			7. Low & reverse brake	AT-253
	Offensive smell at fluid charging pipe.	ON vehicle	1. Fluid level	AT-9
		OFF vehicle	2. Torque converter	AT-215
			3. Oil pump	AT-226
			4. Reverse clutch	AT-243
			5. High clutch	AT-246
			6. Brake band	AT-262
			7. Forward clutch	AT-249
			8. Overrun clutch	AT-249
			9. Low & reverse brake	AT-253
	Engine is stopped at R, D, 2 and 1 positions.	ON vehicle	1. Fluid level	AT-9
			2. Torque converter clutch solenoid valve	AT-120
			3. Shift solenoid valve B	AT-111
			4. Shift solenoid valve A	AT-106
			5. Control valve assembly	AT-205

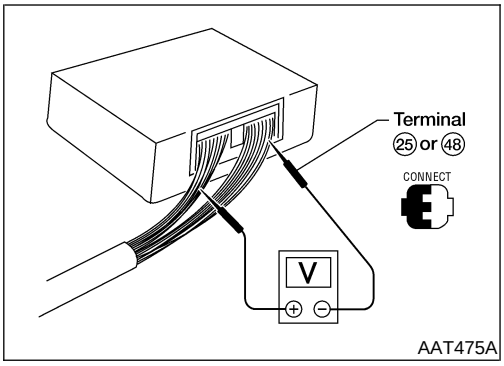

TCM Terminals and Reference Value

=NMAT0027

PREPARATION

NMAT0027S01

- Measure voltage between each terminal and terminal 25 or 48 by following “TCM INSPECTION TABLE”.

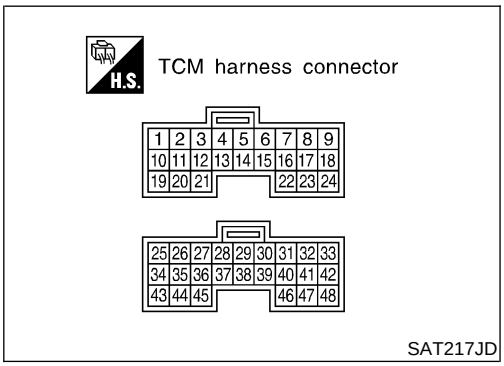

TCM HARNESS CONNECTOR TERMINAL LAYOUT

NMAT0027S02

TCM INSPECTION TABLE
(Data are reference values.)

NMAT0027S03

Terminal No.	Wire color	Item	Condition		Judgement standard (Approx.)
1	OR/B	Line pressure solenoid valve	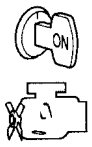	When releasing accelerator pedal after warming up engine.	1.5 - 3.0V
				When depressing accelerator pedal fully after warming up engine.	0V
2	P	Line pressure solenoid valve (with dropping resistor)		When releasing accelerator pedal after warming up engine.	5 - 14V
				When depressing accelerator pedal fully after warming up engine.	0V
3	BR/R	Torque converter clutch solenoid valve		When A/T performs lock-up.	8 - 15V
				When A/T does not perform lock- up.	0V
4	—	—	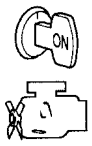	—	—
5*1	L/OR	DT1		—	—
6*1	L/W	DT2		—	—
7*1	PU/W	DT3		—	—
8	—	—		—	—
9	—	—		—	—
10	G/OR	Power source		When turning ignition switch to “ON”.	Battery voltage
				When turning ignition switch to “OFF”.	0V

Terminal No.	Wire color	Item	Condition		Judgement standard (Approx.)
11	R/W	Shift solenoid valve A		When shift solenoid valve A operates. (When driving in "D_1" or "D_4".)	Battery voltage
				When shift solenoid valve A does not operate. (When driving in "D_2" or "D_3".)	0V
12	OR/L	Shift solenoid valve B		When shift solenoid valve B operates. (When driving in "D_1" or "D_2".)	Battery voltage
				When shift solenoid valve B does not operate. (When driving in "D_3" or "D_4".)	0V
13	G	POWER indicator lamp		When setting A/T mode switch in "POWER" position.	Battery voltage
				When setting A/T mode switch in other position.	0V
14	R/G	ND		—	—
15	—	—		—	—
16	LG	Closed throttle position switch (in throttle position switch)		When releasing accelerator pedal after warming up engine.	Battery voltage
				When depressing accelerator pedal after warming up engine.	0V
17	R	Wide open throttle position switch (in throttle position switch)		When depressing accelerator pedal more than half-way after warming up engine.	Battery voltage
				When releasing accelerator pedal after warming up engine.	0V
18	—	—		—	—
19	G/OR	Power source		Same as No. 10	
20	P/L	Overrun clutch solenoid valve		When overrun clutch solenoid valve operates.	Battery voltage
				When overrun clutch solenoid valve does not operate.	0V
21	—	—		—	—
22	L/B	Overdrive control switch		When setting overdrive control switch in "ON" position	Battery voltage
				When setting overdrive control switch in "OFF" position	0V
23	—	—		—	—

TCM Terminals and Reference Value (Cont'd)

Terminal No.	Wire color	Item	Condition		Judgement standard (Approx.)
24	—	—		—	—
25	B	Ground		—	0V
26	P	PNP switch "1" position		When setting selector lever to "1" position.	Battery voltage
				When setting selector lever to other positions.	0V
27	LG	PNP switch "2" position		When setting selector lever to "2" position.	Battery voltage
				When setting selector lever to other positions.	0V
28	R/W	Power source (Memory back-up)	or	When turning ignition switch to "OFF".	Battery voltage
				When turning ignition switch to "ON".	Battery voltage
29	W	Revolution sensor (Measure in AC range)		When vehicle cruises at 30 km/h (19 MPH).	1V or more Voltage rises gradually in response to vehicle speed.
				When vehicle parks.	0V
30*2	G/B	—		—	—
31*2	SB	—		—	—
32	LG/R	Throttle position sensor (Power source)		Ignition switch "ON".	4.5 - 5.5V
				Ignition switch "OFF".	0V
33	—	—		—	—
34	LG/B	PNP switch "D" position		When setting selector lever to "D" position.	Battery voltage
				When setting selector lever to other positions.	0V
35	PU	PNP switch "R" position		When setting selector lever to "R" position.	Battery voltage
				When setting selector lever to other positions.	0V
36	GY	PNP switch "N" or "P" position		When setting selector lever to "N" or "P" position.	Battery voltage
				When setting selector lever to other positions.	0V
37	—	—		—	—
38	—	—		—	—
39	L/OR	Engine speed signal		Refer to EC-76, "ECM Inspection Table".	

Terminal No.	Wire color	Item	Condition		Judgement standard (Approx.)
40	W/PU	Vehicle speed sensor		When moving vehicle at 2 to 3 km/h (1 to 2 MPH) for 1 m (3 ft) or more.	Voltage varies between less than 1.0V and more than 4.5V.
41	R/Y	Throttle position sensor		When depressing accelerator pedal slowly after warming up engine. (Voltage rises gradually in response to throttle position.)	Fully-closed throttle: 0.5V Fully-open throttle: 4V
42	GY	Throttle position sensor (Ground)		—	0V
43	G/Y	A/T mode switch "POWER"		When setting A/T mode switch in "POWER" position.	Battery voltage
				When setting A/T mode switch in other position.	0V
44	L/B	A/T mode switch "SNOW"		When setting A/T mode swtich in "SNOW" position.	Battery voltage
				When setting A/T mode switch in other position.	0V
45	—	—		—	—
46	—	—		—	—
47	W/R	A/T fluid temperature sensor		When ATF temperature is 20°C (68°F).	1.5V
				When ATF temperature is 80°C (176°F).	0.5V
48	B	Ground		—	0V

*1: These terminals are connected to the ECM.
*2: These terminals are connected to the Data link connector.

Wiring Diagram — AT — MAIN

NMAT0185

AT-MAIN-01

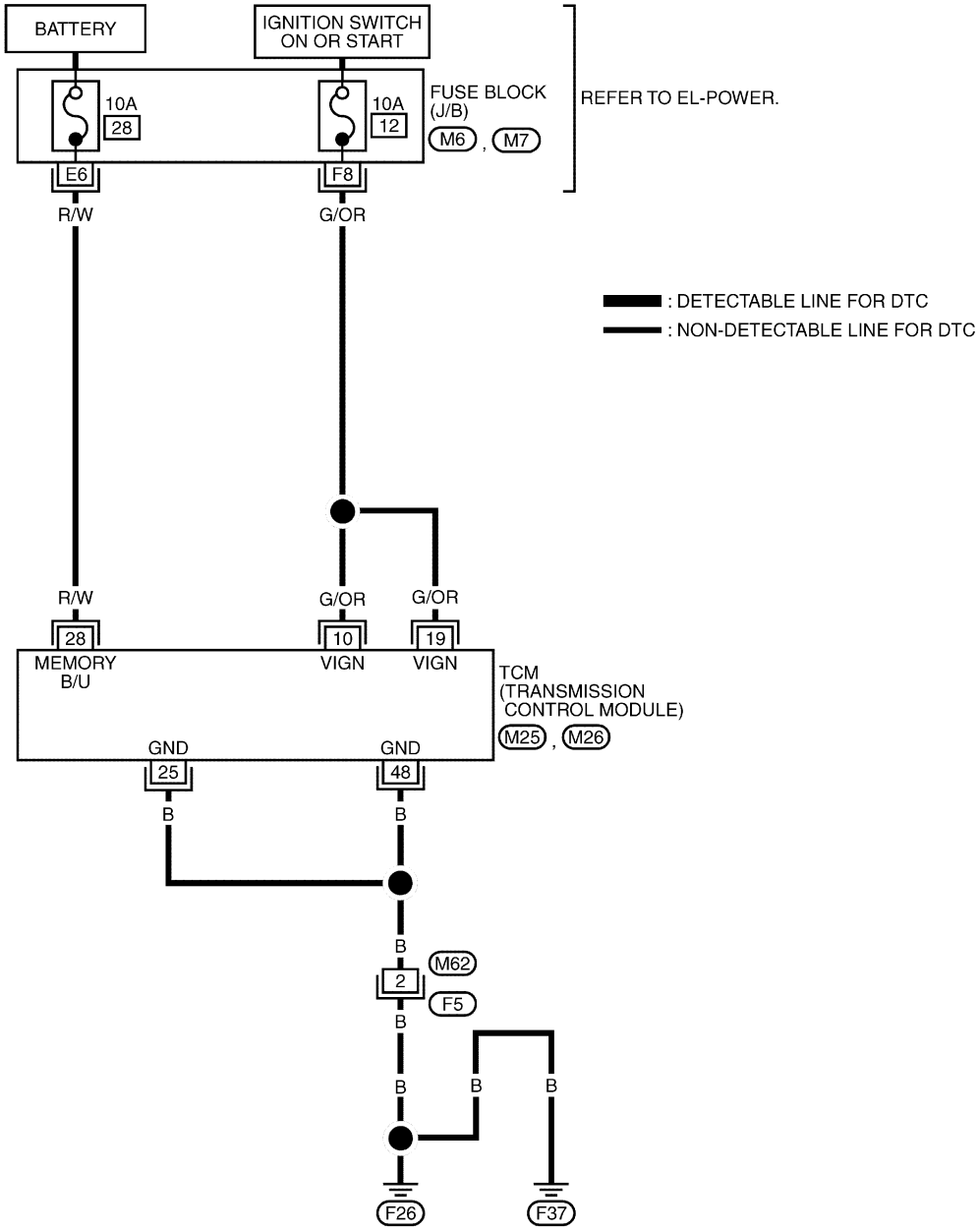

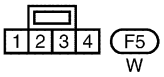

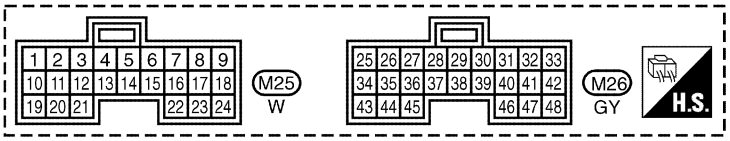

REFER TO THE FOLLOWING.
M6 , M7 -FUSE BLOCK-JUNCTION BOX (J/B)

TAT254

TCM TERMINALS AND REFERENCE VALUE

NMAT0185S01

Remarks: Specification data are reference values.

Terminal No.	Wire color	Item	Condition		Judgement standard (Approx.)
10	G/OR	Power source	ON	When turning ignition switch to "ON".	Battery voltage
				When turning ignition switch to "OFF".	0V
19	G/OR	Power source		Same as No. 10	
25	B	Ground	OFF	—	0V
28	R/W	Power source (Memory back-up)	ON or OFF	When turning ignition switch to "OFF".	Battery voltage
				When turning ignition switch to "ON".	Battery voltage
48	B	Ground	OFF	—	0V

Diagnostic Procedure

NMAT0257

1	CHECK TCM POWER SOURCE STEP 1

1. Turn ignition switch to ON position.
   (Do not start engine.)
2. Check voltage between TCM harness connector M25, M26 terminal Nos. 10 (G/OR), 19 (G/OR), 28 (R/W) and ground.

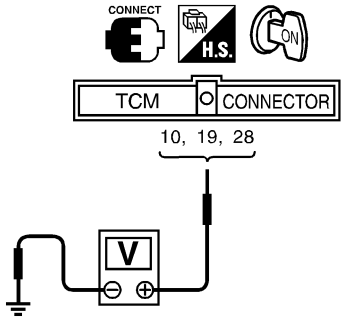

Voltage:
Battery voltage

SAT611J

OK or NG

OK	▶	GO TO 2.
NG	▶	GO TO 3.

2	CHECK TCM POWER SOURCE STEP 2

1. Turn ignition switch to OFF position.
2. Check voltage between TCM harness connector M26 terminal No. 28 (R/W) and ground.

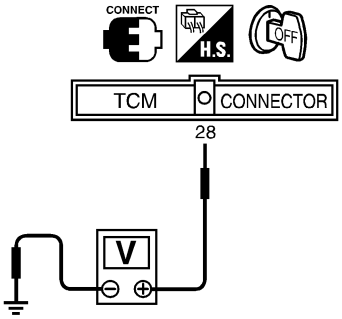

Voltage:
Battery voltage

SAT612JE

OK or NG

OK	▶	GO TO 4.
NG	▶	GO TO 3.

3	DETECT MALFUNCTIONING ITEM

Check the following items:
- Harness for short or open between ignition switch and TCM terminals 10, 19 and 28 (Main harness)
- Ignition switch and 10A fuse [No. 12 or 28, located in the fuse block (J/B)]
  Refer to EL-7, "Schematic".

OK or NG

OK	▶	GO TO 4.
NG	▶	Repair or replace damaged parts.

4	CHECK TCM GROUND CIRCUIT

1. Turn ignition switch to OFF position.
2. Disconnect TCM harness connector.
3. Check continuity between TCM terminal Nos. 25, 48 and ground. Refer to "Wiring Diagram — AT — MAIN", AT-86.
   Continuity should exist.
   If OK, check harness for short to ground and short to power.

OK or NG

OK	▶	**INSPECTION END**
NG	▶	Repair open circuit or short to ground or short to power in harness or connectors.

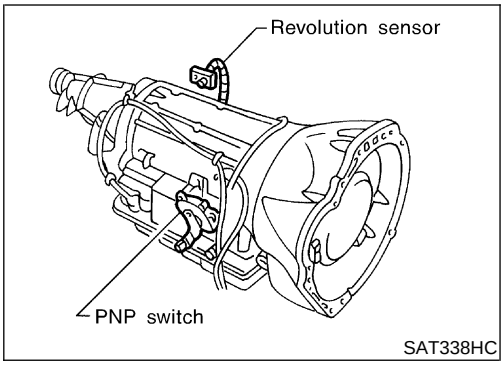

Description

NMAT0034

The revolution sensor detects the revolution of the out put shaft parking pawl lock gear and emits a pulse signal. The pulse signal is sent to the TCM which converts it into vehicle speed.

TCM TERMINALS AND REFERENCE VALUE

NMAT0034S02

Remarks: Specification data are reference values.

Terminal No.	Wire color	Item	Condition		Judgement standard (Approx.)
29	W	Revolution sensor (Measure in AC range)		When vehicle cruises at 30 km/h (19 MPH).	1V or more Voltage rises gradually in response to vehicle speed.
				When vehicle parks.	0V
42	G/Y	Throttle position sensor (Ground)	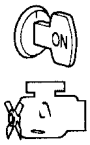	—	0V

ON BOARD DIAGNOSIS LOGIC

NMAT0034S03

Diagnostic trouble code	Malfunction is detected when ...	Check item (Possible cause)
(H) : VHCL SPEED SEN·A/T	TCM does not receive the proper voltage signal from the sensor.	● Harness or connectors (The sensor circuit is open or shorted.) ● Revolution sensor
(GST) : 1st judgement flicker		

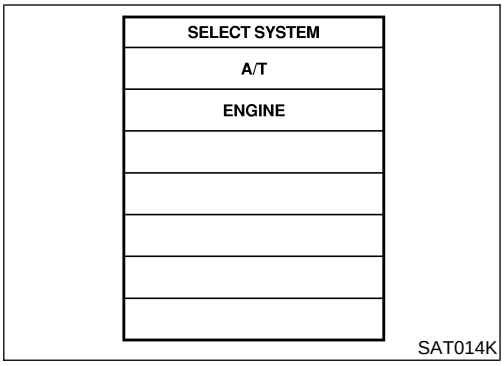

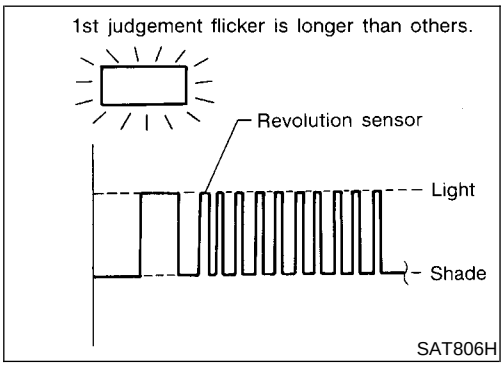

SELF-DIAGNOSIS CODE CONFIRMATION PROCEDURE

NMAT0034S04

After the repair, perform the following procedure to confirm the malfunction is eliminated.

WITH CONSULT-II

NMAT0034S05

1) Start engine.
2) Select "SELF-DIAG RESULTS" mode for "A/T" with CONSULT-II.
3) Drive vehicle under the following conditions:
   Selector lever in "D" position, vehicle speed higher than 30 km/h (19 MPH), throttle opening greater than 1/8 of the full throttle position and driving for more than 5 seconds.

WITHOUT CONSULT-II

NMAT0034S06

1) Start engine.
2) Drive vehicle under the following conditions:
   Selector lever in "D" position, vehicle speed higher than 30 km/h (19 MPH), throttle opening greater than 1/8 of the full throttle position and driving for more than 5 seconds.
3) Perform self-diagnosis.
   Refer to SELF-DIAGNOSTIC PROCEDURE (Without CONSULT-II), AT-37.

Wiring Diagram — AT — VSSA/T

NMAT0188

AT-VSSA/T-01

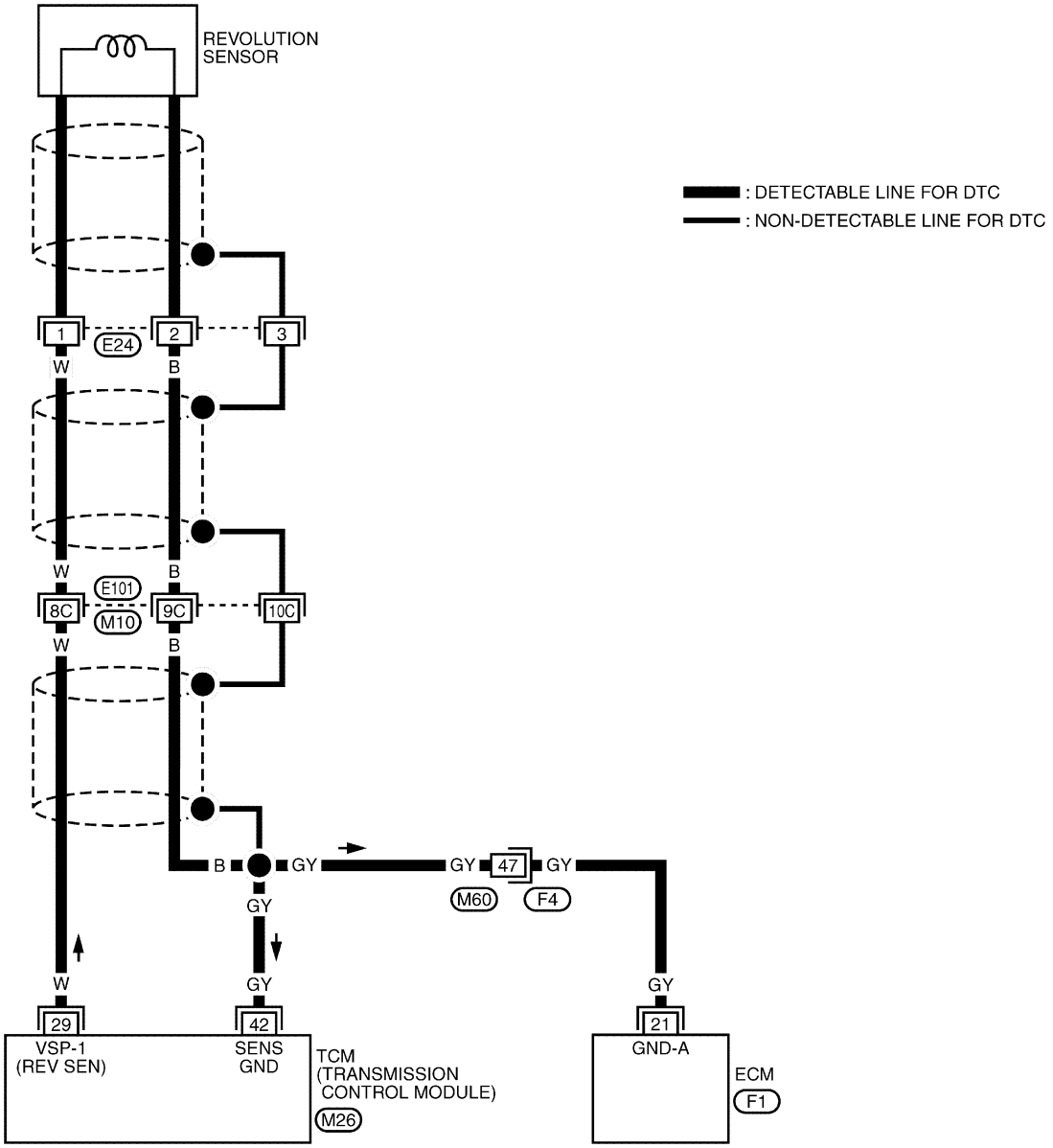

REFER TO THE FOLLOWING.
E101 , F4 -SUPER MULTIPLE JUNCTION (SMJ)

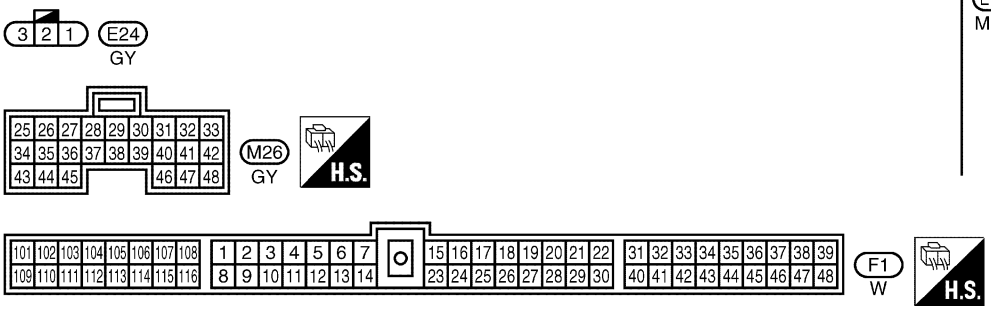

TAT255

Diagnostic Procedure

NMAT0035

1	CHECK REVOLUTION SENSOR	
Refer to “Component Inspection”, AT-93.		
OK or NG		
OK (With CONSULT-II)	▶	GO TO 2.
OK (Without CONSULT-II)	▶	GO TO 3.
NG	▶	Repair or replace revolution sensor.

2	CHECK INPUT SIGNAL (WITH CONSULT-II)	
With CONSULT-II 1. Start engine. 2. Select “TCM INPUT SIGNALS” in “DATA MONITOR” mode for “A/T” with CONSULT-II. 3. Read out the value of “VHCL/S SE·A/T” while driving. Check the value changes according to driving speed.		

DATA MONITOR	
MONITORING	
VHCL/S SE-A/T	XXX km/h
VHCL/S SE-MTR	XXX km/h
THRTL POS SEN	XXX V
FLUID TEMP SE	XXX V
BATTERY VOLT	XXX V

SAT614J

OK or NG		
OK	▶	GO TO 4.
NG	▶	**Check the following items:** ● Harness for short or open between TCM and revolution sensor (Main harness) ● Harness for short or open between revolution sensor and ECM (Main harness) ● Ground circuit for ECM Refer to EC-83, “Wiring Diagram”.

3	CHECK INPUT SIGNAL (WITHOUT CONSULT-II)

Without CONSULT-II

1. Start engine.
2. Check voltage between TCM harness connector M26 terminal No. 29 and ground while driving. (Measure with AC range.)

Voltage:
At 0 km/h (0 MPH):
0V
At 30 km/h (19 MPH):
1V or more
(Voltage rises gradually in response to vehicle speed.)

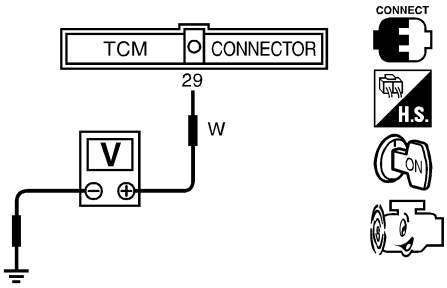

SAT519J

OK or NG

OK	▶	GO TO 4.
NG	▶	**Check the following items:** ● Harness for short or open between TCM and revolution sensor (Main harness) ● Harness for short or open between revolution sensor and ECM (Main harness) ● Ground circuit for ECM Refer to EC-83, "Wiring Diagram".

4	CHECK DTC

Perform Self-diagnosis Code confirmation procedure, AT-90.

OK or NG

OK	▶	**INSPECTION END**
NG	▶	1. Perform TCM input/output signal inspection. 2. If NG, recheck TCM pin terminals for damage or loose connection with harness connector.

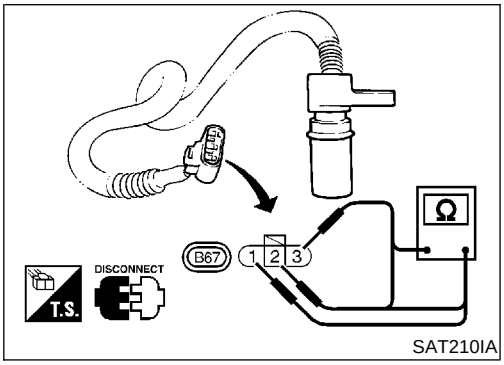

SAT210IA

Component Inspection

NMAT0036

REVOLUTION SENSOR

NMAT0036S01

- For removal, refer to AT-205.
- Check resistance.

Terminals			
Connector	Terminal No. (Wire color)		Resistance (Approx.) Ω
E24	1 (W)	2 (B)	500 - 650
	1 (W)	3 (Shield wire)	No continuity
	2 (B)	3 (Shield wire)	

Description

NMAT0217

The vehicle speed sensor·MTR is built into the speedometer assembly. The sensor functions as an auxiliary device to the revolution sensor when it is malfunctioning. The TCM will then use a signal sent from the vehicle speed sensor·MTR.

TCM TERMINALS AND REFERENCE VALUE

NMAT0217S01

Remarks: Specification data are reference values.

Terminal No.	Wire color	Item	Condition		Judgement standard (Approx.)
40	W/PU	Vehicle speed sensor		When moving vehicle at 2 to 3 km/h (1 to 2 MPH) for 1 m (3 ft) or more.	Voltage varies between less than 1V and more than 4.5V

ON BOARD DIAGNOSIS LOGIC

NMAT0217S02

Diagnostic trouble code	Malfunction is detected when ...	Check item (Possible cause)
: VHCL SPEED SEN·MTR	TCM does not receive the proper voltage signal from the sensor.	• Harness or connectors (The sensor circuit is open or shorted.) • Vehicle speed sensor
: 2nd judgement flicker		

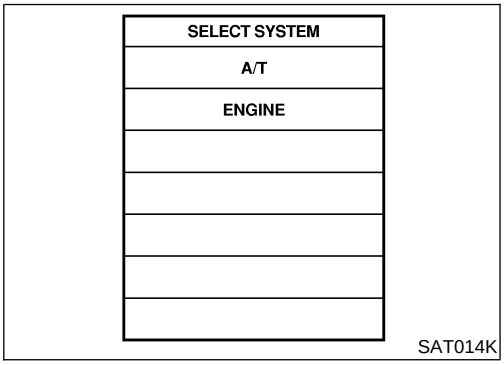

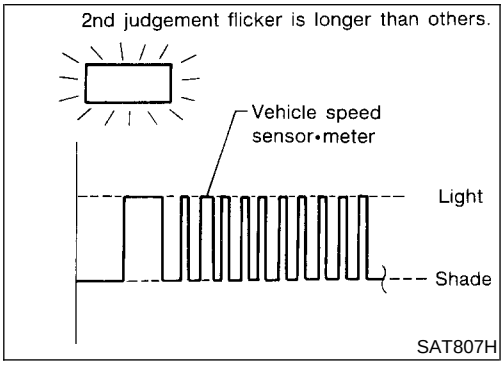

SELF-DIAGNOSIS CODE CONFIRMATION PROCEDURE

NMAT0217S04

After the repair, perform the following procedure to confirm the malfunction is eliminated.

WITH CONSULT-II

NMAT0217S05

1) Start engine.
2) Select “SELF-DIAG RESULTS” mode for “A/T” with CONSULT-II.
3) Drive vehicle under the following conditions:
   Selector lever in “D” position and vehicle speed higher than 20 km/h (12 MPH).

WITHOUT CONSULT-II

NMAT0217S06

1) Start engine.
2) Drive vehicle under the following conditions:
   Selector lever in “D” position and vehicle speed higher than 20 km/h (12 MPH).
3) Perform self-diagnosis.
   Refer to SELF-DIAGNOSTIC PROCEDURE (Without CONSULT-II), AT-37.

Wiring Diagram — AT — VSSMTR

NMAT0218

AT-VSSMTR-01

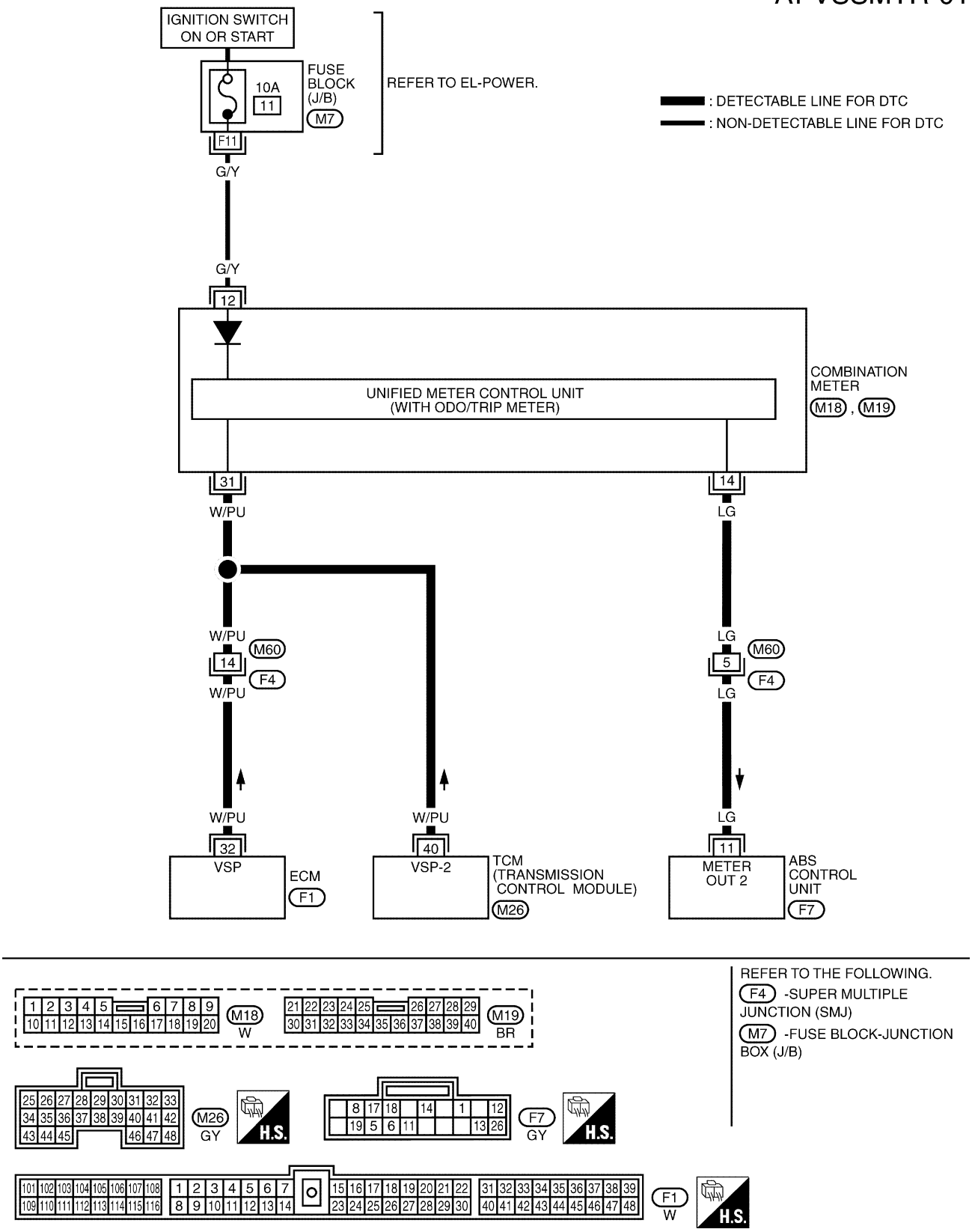

TAT256

Diagnostic Procedure

NMAT0219

1	CHECK INPUT SIGNAL.

With CONSULT-II

1. Start engine.
2. Select “TCM INPUT SIGNALS” in “DATA MONITOR” mode for “A/T” with CONSULT-II.
3. Read out the value of “VHCL/S SE·MTR” while driving.
   Check the value changes according to driving speed.

DATA MONITOR	
MONITORING	
VHCL/S SE-A/T	XXX km/h
VHCL/S SE-MTR	XXX km/h
THRTL POS SEN	XXX V
FLUID TEMP SE	XXX V
BATTERY VOLT	XXX V

SAT614J

Without CONSULT-II

1. Start engine.
2. Check voltage between TCM harness connector M26 terminal No. 40 (W/PU) and ground while driving at 2 to 3 km/h (1 to 2 MPH) for 1 m (3 ft) or more.

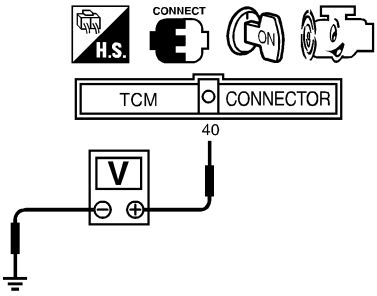

SAT528JA

Does battery voltage vary between less than 1V and more than 4.5V?

Yes	▶	GO TO 2.
No	▶	**Check the following items:** ● Vehicle speed sensor and ground circuit for vehicle speed sensor (Refer to EL-58, “Component Parts and Harness Connector Location”.) ● Harness for short or open between TCM and vehicle speed sensor (Main harness) ● Harness for short or open between ABS control unit and combination meter

2	CHECK DTC

Perform Self-diagnosis Code confirmation procedure, AT-95.

OK or NG

OK	▶	**INSPECTION END**
NG	▶	1. Perform TCM input/output signal inspection. 2. If NG, recheck TCM pin terminals for damage or loose connection with harness connector.

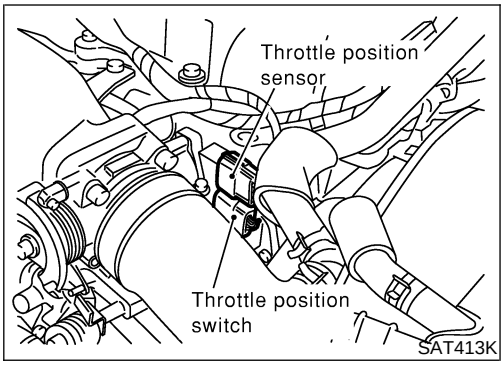

Description

NMAT0220

- Throttle position sensor
  The throttle position sensor detects the throttle valve position and sends a signal to the TCM.
- Throttle position switch
  Consists of a wide open throttle position switch and a closed throttle position switch. The wide open position switch sends a signal to the TCM when the throttle valve is open at least 1/2 of the full throttle position. The closed throttle position switch sends a signal to the TCM when the throttle valve is fully closed.

CONSULT-II REFERENCE VALUE IN DATA MONITOR MODE

NMAT0220S01

Remarks: Specification data are reference values.

Monitor item	Condition	Specification
Throttle position sensor	Fully-closed throttle	Approximately 0.5V
	Fully-open throttle	Approximately 4V

TCM TERMINALS AND REFERENCE VALUE

NMAT0220S02

Remarks: Specification data are reference values.

Terminal No.	Wire color	Item	Condition		Judgement standard (Approx.)
16	LG	Closed throttle position switch (in throttle position switch)		When releasing accelerator pedal after warming up engine.	Battery voltage
				When depressing accelerator pedal after warming up engine.	0V
17	R	Wide open throttle position switch (in throttle position switch)		When depressing accelerator pedal more than half-way after warming up engine.	Battery voltage
				When releasing accelerator pedal after warming up engine.	0V
32	LG/R	Throttle position sensor (Power source)		Ignition switch “ON”.	4.5 - 5.5V
				Ignition switch “OFF”.	0V
41	R/Y	Throttle position sensor		When depressing accelerator pedal slowly after warming up engine. (Voltage rises gradually in response to throttle position.)	Fully-closed throttle: 0.5V Fully-open throttle: 4V
42	G/Y	Throttle position sensor (Ground)		—	0V

ON BOARD DIAGNOSIS LOGIC

=NMAT0220S03

Diagnostic trouble code	Malfunction is detected when ...	Check item (Possible cause)
: THROTTLE POSI SEN	TCM receives an excessively low or high voltage from the sensor.	● Harness or connectors (The solenoid circuit is open or shorted.) ● Throttle position sensor ● Throttle position switch
: 3rd judgement flicker		

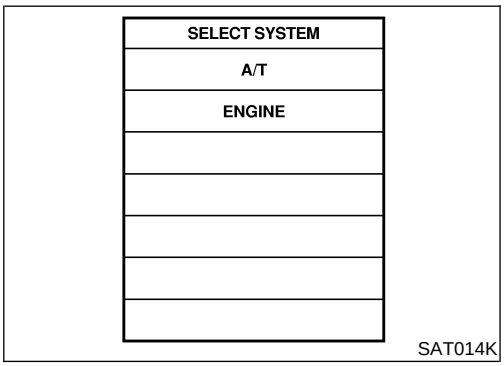

SAT014K

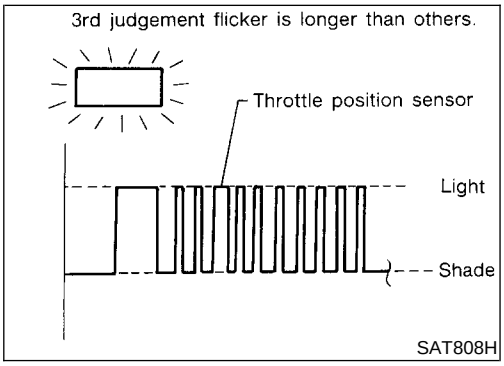

SAT808H

SELF-DIAGNOSIS CODE CONFIRMATION PROCEDURE

NMAT0220S05

After the repair, perform the following procedure to confirm the malfunction is eliminated.

WITH CONSULT-II

NMAT0220S06

1) Start engine.
2) Select "SELF-DIAG RESULTS" mode for "A/T" with CONSULT-II.
3) Drive vehicle under the following conditions:
   Selector lever in "D" position, vehicle speed higher than 10 km/h (6 MPH), throttle opening greater than 1/2 of the full throttle position and driving for more than 3 seconds.

WITHOUT CONSULT-II

NMAT0220S07

1) Start engine.
2) Drive vehicle under the following conditions:
   Selector lever in "D" position, vehicle speed higher than 10 km/h (6 MPH), throttle opening greater than 1/2 of the full throttle position and driving for more than 3 seconds.
3) Perform self-diagnosis.
   Refer to SELF-DIAGNOSTIC PROCEDURE (Without CONSULT-II), AT-37.

Wiring Diagram — AT — TPS

NMAT0221

AT-TPS-01

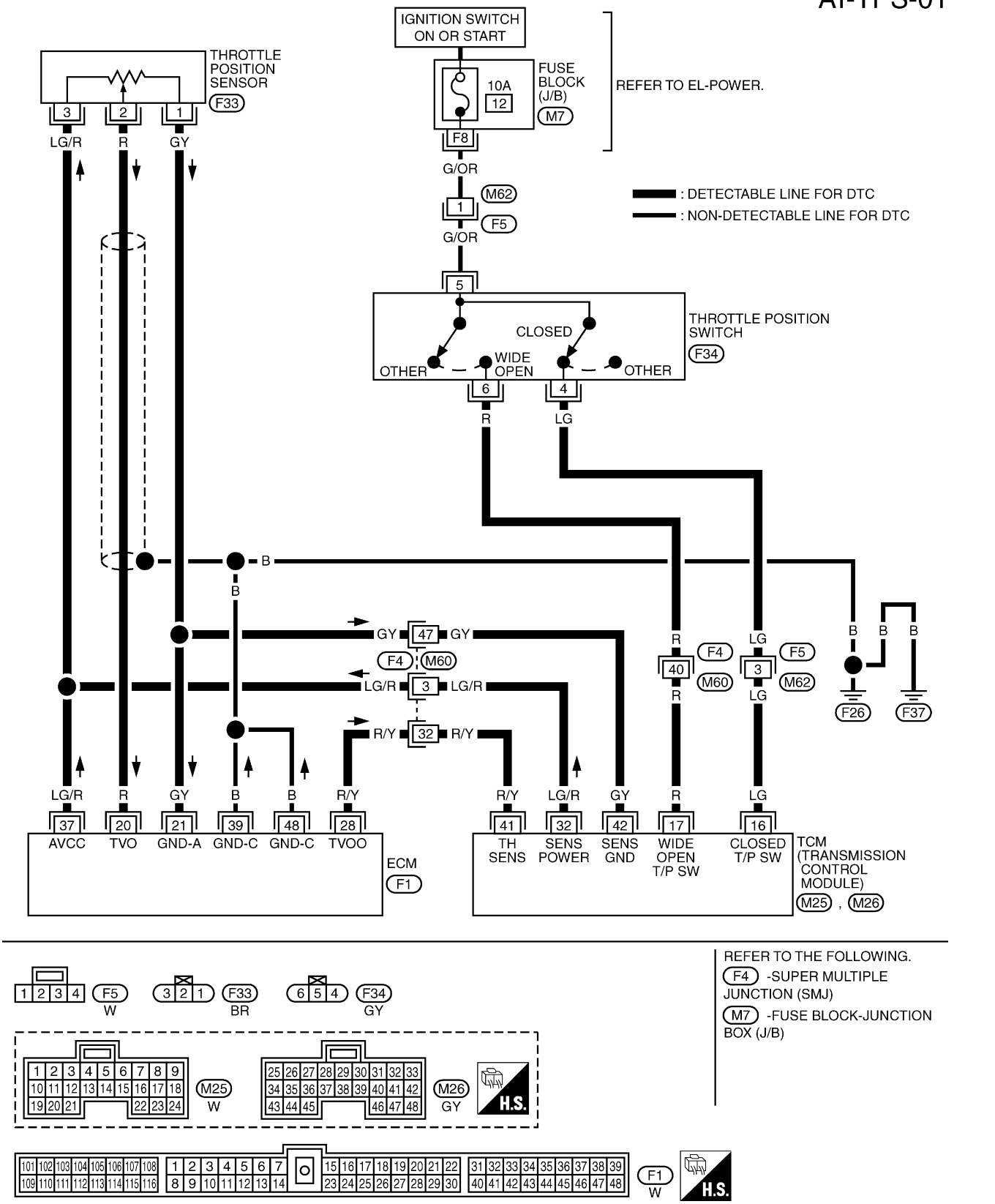

TAT257

Diagnostic Procedure

NMAT0222

1	CHECK DTC WITH ECM	
Perform diagnostic test mode II (self-diagnostic results) for engine control. Refer to EC-35, “Description”.		
OK or NG		
OK	▶	GO TO 2.
NG	▶	Check throttle position sensor circuit for engine control. Refer to EC-141, “Component Description”.

2	CHECK INPUT SIGNAL

With CONSULT-II

1. Turn ignition switch to "ON" position.
   (Do not start engine.)
2. Select "TCM INPUT SIGNALS" in "DATA MONITOR" mode for "A/T" with CONSULT-II.
3. Read out the value of "THRTL POS SEN".
   Voltage:
   Fully-closed throttle:
   Approximately 0.5V
   Fully-open throttle:
   Approximately 4V

DATA MONITOR	
MONITORING	
VHCL/S SE-A/T	XXX km/h
VHCL/S SE-MTR	XXX km/h
THRTL POS SEN	XXX V
FLUID TEMP SE	XXX V
BATTERY VOLT	XXX V

SAT614J

Without CONSULT-II

1. Turn ignition switch to "ON" position.
   (Do not start engine.)
2. Check voltage between TCM harness connector M26 terminal Nos. 41 (R/Y) and 42 (GY) while accelerator pedal is depressed slowly.
   Voltage:
   Fully-closed throttle valve:
   Approximately 0.5V
   Fully-open throttle valve:
   Approximately 4V
   (Voltage rises gradually in response to throttle position.)

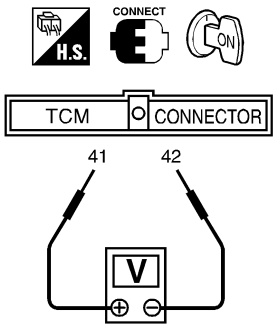

SAT513JC

OK or NG

OK (With CONSULT-II)	▶	GO TO 3.
OK (Without CONSULT-II)	▶	GO TO 4.
NG	▶	Check harness for short or open between ECM and TCM regarding throttle position sensor circuit. (Main harness)

3	CHECK THROTTLE POSITION SWITCH CIRCUIT (With CONSULT-II)

With CONSULT-II

1. Turn ignition switch to "ON" position.
   (Do not start engine.)
2. Select "TCM INPUT SIGNALS" in "DATA MONITOR" mode for "A/T" with CONSULT-II.
3. Read out "CLOSED THL/SW" and "W/O THRL/P-SW" depressing and releasing accelerator pedal.
   Check the signal of throttle position switch is indicated properly.

Accelerator pedal condition	Data monitor	
	CLOSED THL/SW	W/O THRL/P-SW
Released	ON	OFF
Fully depressed	OFF	ON

MTBL0011

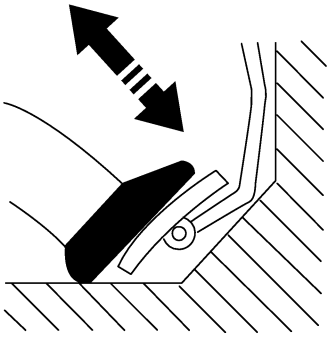

DATA MONITOR	
MONITORING	
POWERSHIFT SW	OFF
CLOSED THL/SW	OFF
W/O THRL/P-SW	OFF
HOLD SW	OFF
BRAKE SW	ON

SAT646J

OK or NG

OK	▶	GO TO 5.
NG	▶	**Check the following items:** ● Throttle position switch Refer to "Component Inspection", AT-105. ● Harness for short or open between ignition switch and throttle position switch (Main harness) ● Harness for short or open between throttle position switch and TCM (Main harness)

4	CHECK THROTTLE POSITION SWITCH CIRCUIT (Without CONSULT-II)

Without CONSULT-II

1. Turn ignition switch to "ON" position.
   (Do not start engine.)
2. Check voltage between TCM harness connector M25 terminal Nos. 16 (LG), 17 (R) and ground while depressing, and releasing accelerator pedal slowly. (after warming up engine)

Accelerator pedal condition	Voltage	
	Terminal No. 16	Terminal No. 17
Released	Battery voltage	0V
Fully depressed	0V	Battery voltage

MTBL0637

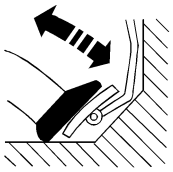

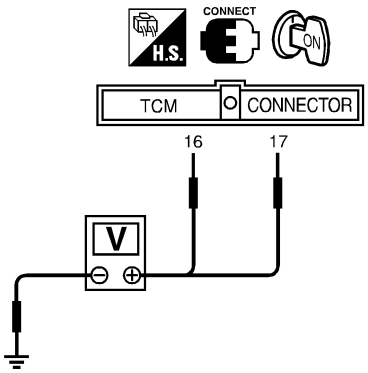

SAT526JC

OK or NG

OK	▶	GO TO 5.
NG	▶	**Check the following items:** ● Throttle position switch Refer to "Component Inspection", AT-105. ● Harness for short or open between ignition switch and throttle position switch (Main harness) ● Harness for short or open between throttle position switch and TCM (Main harness)

5	CHECK DTC

Perform Self-diagnosis Code confirmation procedure, AT-99.

OK or NG

OK	▶	**INSPECTION END**
NG	▶	1. Perform TCM input/output signal inspection. 2. If NG, recheck TCM pin terminals for damage or loose connection with harness connector.

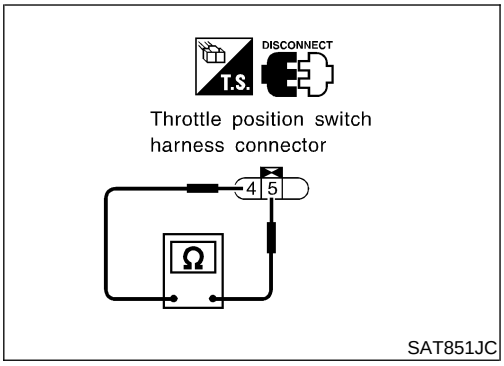

Component Inspection

NMAT0223

THROTTLE POSITION SWITCH

NMAT0223S01

Closed Throttle Position Switch (Idle position)

NMAT0223S0101

- Check continuity.

Terminals				
Connector	Accelerator pedal condition	Terminal No. (Wire color)		Continuity
F34	Released	4 (LG)	5 (G/OR)	Yes
	Depressed			No

- To adjust closed throttle position switch, refer to EC-50, “Basic Inspection”.

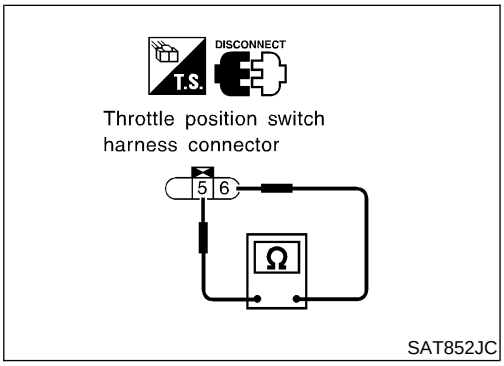

Wide Open Throttle Position Switch

NMAT0223S0102

- Check continuity.

Terminals				
Connector	Accelerator pedal condition	Terminal No. (Wire color)		Continuity
F34	Released	5 (G/OR)	6 (R)	No
	Depressed			Yes

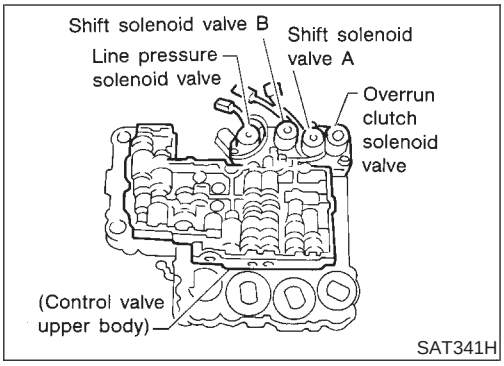

Description

NMAT0224

Shift solenoid valves A and B are turned “ON” or “OFF” by the TCM in response to signals sent from the PNP switch, vehicle speed and throttle position sensors. Gears will then be shifted to the optimum position.

Gear position	1	2	3	4
Shift solenoid valve A	ON (Closed)	OFF (Open)	OFF (Open)	ON (Closed)
Shift solenoid valve B	ON (Closed)	ON (Closed)	OFF (Open)	OFF (Open)

TCM TERMINALS AND REFERENCE VALUE

NMAT0224S01

Remarks: Specification data are reference values.

Terminal No.	Wire color	Item	Condition		Judgement standard (Approx.)
11	R/W	Shift solenoid valve A		When shift solenoid valve A operates. (When driving in “D_1” or “D_4”.)	Battery voltage
				When shift solenoid valve A does not operate. (When driving in “D_2” or “D_3”.)	0V

ON BOARD DIAGNOSIS LOGIC

NMAT0224S02

Diagnostic trouble code	Malfunction is detected when ...	Check item (Possible cause)
: SHIFT SOLENOID/V A	TCM detects an improper voltage drop when it tires to operate the solenoid valve.	● Harness or connectors (The solenoid circuit is open or shorted.) ● Shift solenoid valve A
: 4th judgement flicker		

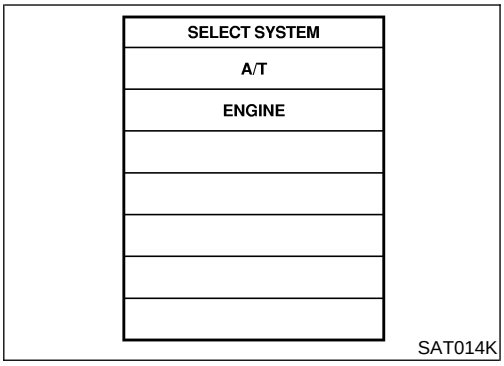

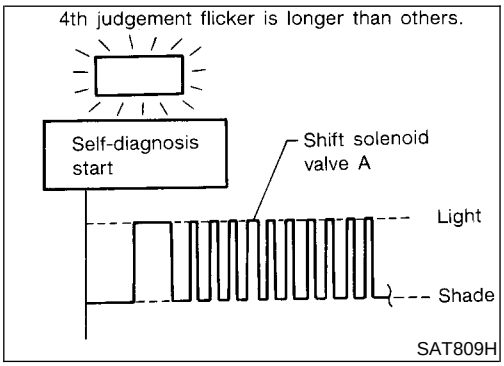

SELF-DIAGNOSIS CODE CONFIRMATION PROCEDURE

=NMAT0224S04

After the repair, perform the following procedure to confirm the malfunction is eliminated.

WITH CONSULT-II

NMAT0224S05

1) Start engine.
2) Select "SELF-DIAG RESULTS" mode for "A/T" with CONSULT-II.
3) Drive vehicle in $D_1 \rightarrow D_2$ position.

WITHOUT CONSULT-II

NMAT0224S06

1) Start engine.
2) Drive vehicle in $D_1 \rightarrow D_2$ position.
3) Perform self-diagnosis.
   Refer to SELF-DIAGNOSTIC PROCEDURE (Without CONSULT-II), AT-37.

Wiring Diagram — AT — SSV/A

NMAT0225

AT-SSV/A-01

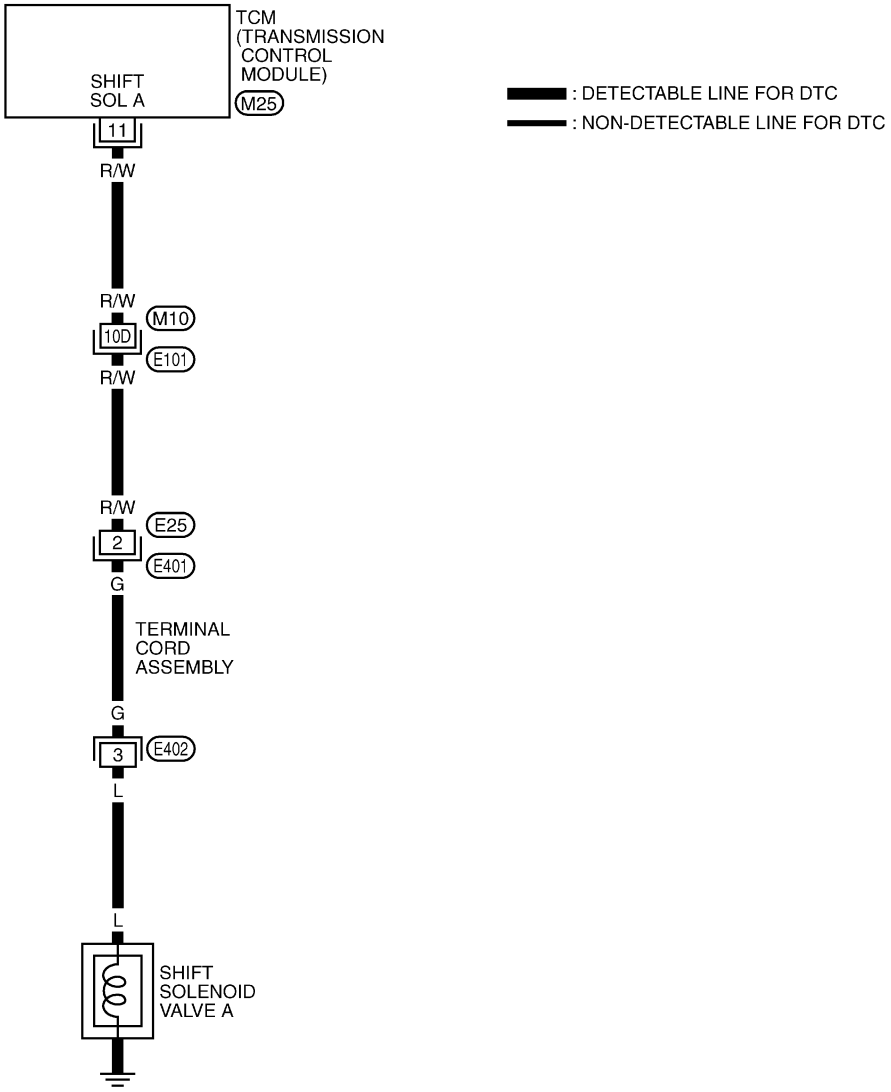

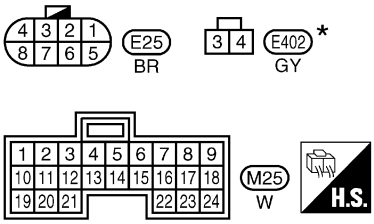

*: THIS CONNECTOR IS NOT SHOWN IN "HARNESS LAYOUT", EL SECTION.

REFER TO THE FOLLOWING.
E101 -SUPER MULTIPLE JUNCTION (SMJ)

TAT258

Diagnostic Procedure

NMAT0226

1	CHECK GROUND CIRCUIT	
1. Turn ignition switch to “OFF” position. 2. Disconnect solenoid valve harness connector (terminal cord assembly) E25 connector in engine compartment. 3. Check resistance between solenoid valve harness connector (terminal cord assembly) E25 terminal No. 2 (R/W) and ground. 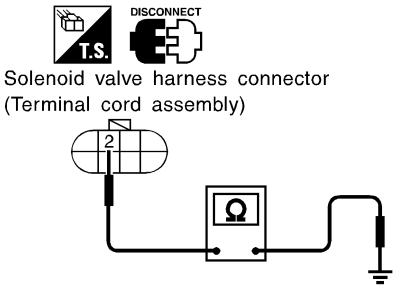 SAT448K **Is resistance approx. 20 - 40Ω?**		
Yes	▶	GO TO 2.
No	▶	1. Remove control valve assembly. Refer to AT-205. 2. Check the following items: ● Shift solenoid valve A Refer to “Component Inspection”, AT-110. ● Harness of terminal cord assembly for short or open

2	CHECK POWER SOURCE CIRCUIT	
1. Turn ignition switch to “OFF” position. 2. Disconnect TCM harness connector. 3. Check resistance between solenoid valve harness connector E25 terminal No. 2 (R/W) and TCM harness connector M25 terminal No. 11 (R/W). 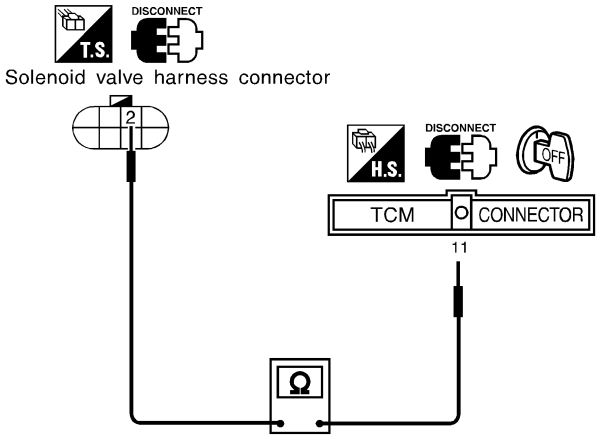 SAT801JA If OK, check harness for short to ground and short to power. **Is resistance approx. 0Ω?**		
Yes	▶	GO TO 3.
No	▶	Repair open circuit or short to ground or short to power in harness or connectors.

3	CHECK DTC	
Perform Self-diagnosis Code confirmation procedure, AT-107.		
	OK or NG	
OK	▶	**INSPECTION END**
NG	▶	1. Perform TCM input/output signal inspection. 2. If NG, recheck TCM pin terminals for damage or loose connection with harness connector.

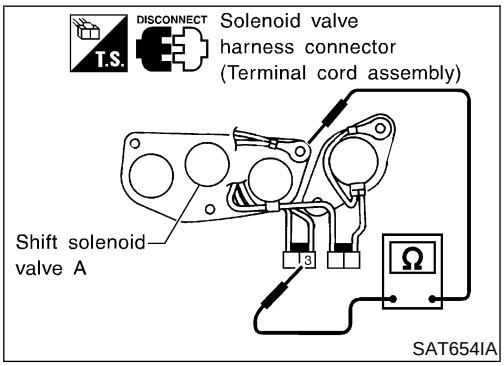

Component Inspection

NMAT0227

SHIFT SOLENOID VALVE A

NMAT0227S01

- For removal, refer to AT-205.

Resistance Check

NMAT0227S0101

- Check resistance.

Terminal			
Connector	Terminal No. (Wire color)		Resistance (Approx.) Ω
E402	3 (L)	Ground	20 - 40

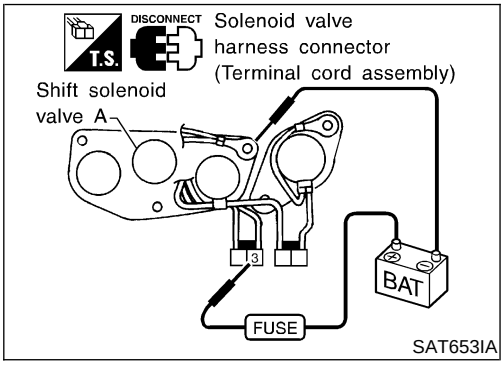

Operation Check

NMAT0227S0102

- Check solenoid valve by listening for its operating sound while applying battery voltage to the solenoid valve harness connector (terminal cord assembly) E402 terminal No. 3 (L) and ground.

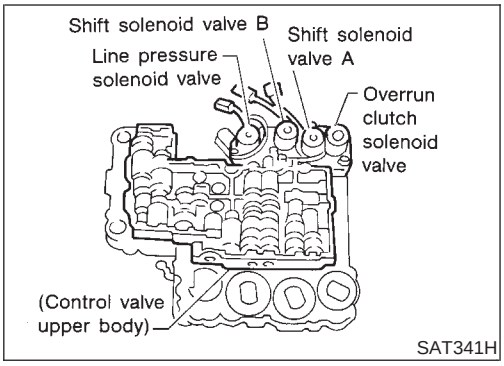

Description

NMAT0228

Shift solenoid valves A and B are turned “ON” or “OFF” by the TCM in response to signals sent from the PNP switch, vehicle speed and throttle position sensors. Gears will then be shifted to the optimum position.

Gear position	1	2	3	4
Shift solenoid valve A	ON (Closed)	OFF (Open)	OFF (Open)	ON (Closed)
Shift solenoid valve B	ON (Closed)	ON (Closed)	OFF (Open)	OFF (Open)

TCM TERMINALS AND REFERENCE VALUE

NMAT0228S01

Remarks: Specification data are reference values.

Terminal No.	Wire color	Item	Condition		Judgement standard (Approx.)
12	OR/L	Shift solenoid valve B		When shift solenoid valve B operates. (When driving in “D_1” or “D_2”.)	Battery voltage
				When shift solenoid valve B does not operate. (When driving in “D_3” or “D_4”.)	0V

ON BOARD DIAGNOSIS LOGIC

NMAT0228S02

Diagnostic trouble code	Malfunction is detected when ...	Check item (Possible cause)
: SHIFT SOLENOID/V B	TCM detects an improper voltage drop when it tires to operate the solenoid valve.	• Harness or connectors (The solenoid circuit is open or shorted.) • Shift solenoid valve B
: 5th judgement flicker		

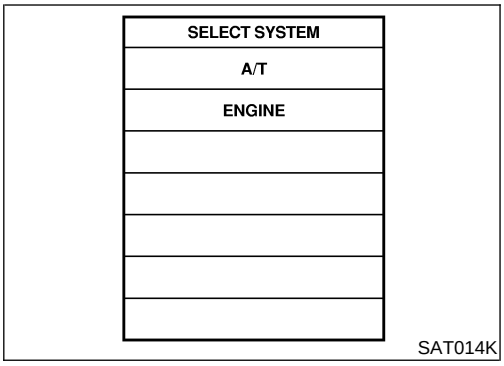

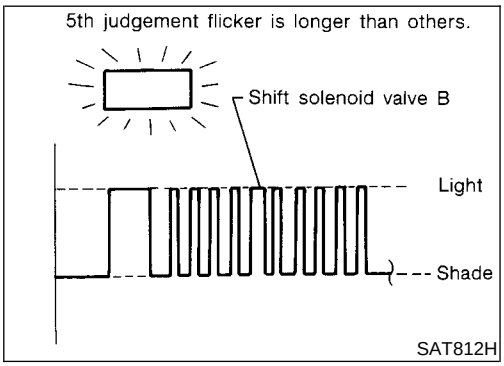

SELF-DIAGNOSIS CODE CONFIRMATION PROCEDURE

=NMAT0228S04

After the repair, perform the following procedure to confirm the malfunction is eliminated.

WITH CONSULT-II

NMAT0228S05

1) Start engine.
2) Select "SELF-DIAG RESULTS" mode for "A/T" with CONSULT-II.
3) Drive vehicle in $D_1 \rightarrow D_2 \rightarrow D_3$ position.

WITHOUT CONSULT-II

NMAT0228S06

1) Start engine.
2) Drive vehicle in $D_1 \rightarrow D_2 \rightarrow D_3$ position.
3) Perform self-diagnosis.
   Refer to SELF-DIAGNOSTIC PROCEDURE (Without CONSULT-II), AT-37.

Wiring Diagram — AT — SSV/B

NMAT0229

AT-SSV/B-01

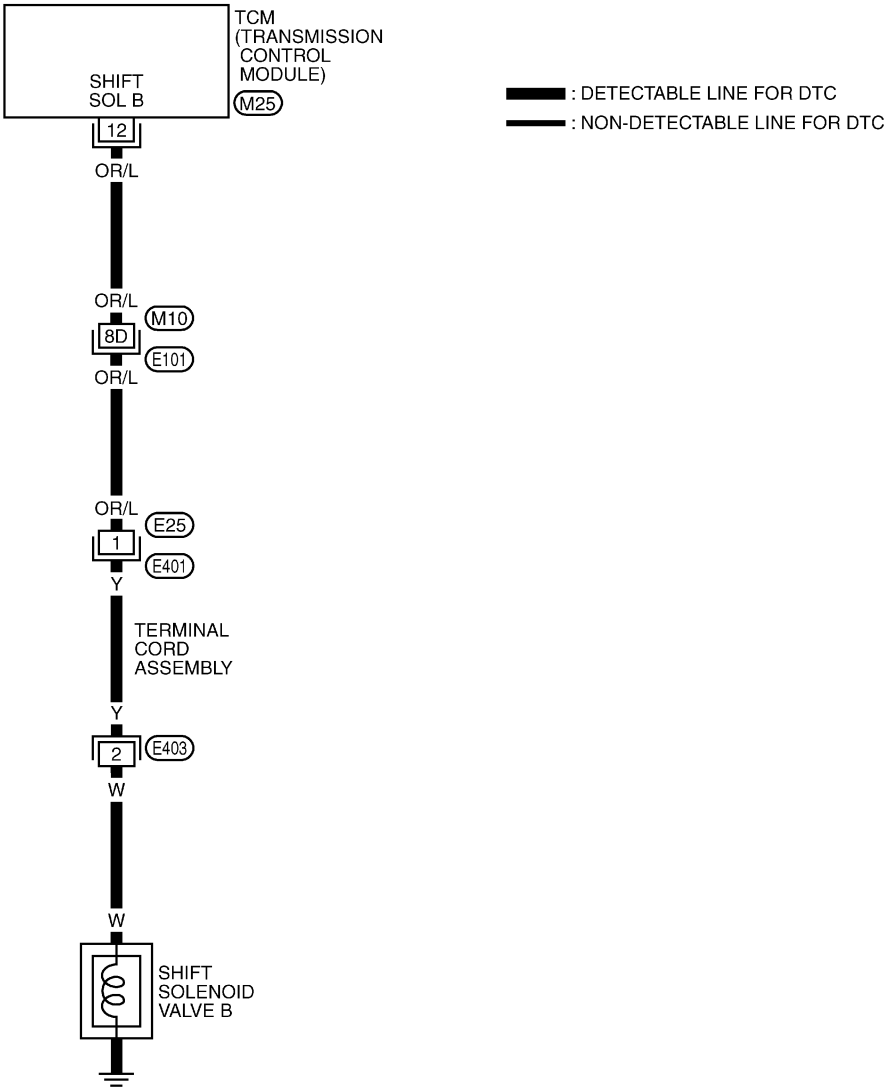

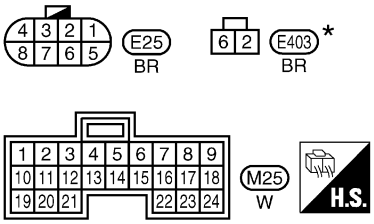

*: THIS CONNECTOR IS NOT SHOWN IN "HARNESS LAYOUT", EL SECTION.

REFER TO THE FOLLOWING.
E101 -SUPER MULTIPLE JUNCTION (SMJ)

TAT259

Diagnostic Procedure

NMAT0230

1	CHECK GROUND CIRCUIT

1. Turn ignition switch to “OFF” position.
2. Disconnect solenoid valve harness connector (terminal cord assembly) E25 in engine compartment.
3. Check resistance between solenoid valve harness connector (terminal cord assembly) E25 terminal No. 1 (OR/L) and ground.

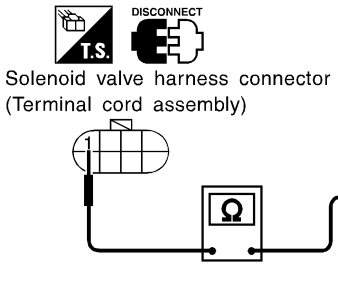

SAT802JA

Is resistance approx. 20 - 40Ω?

Yes	▶	GO TO 2.
No	▶	1. Remove control valve assembly. Refer to AT-205. 2. Check the following items: ● Shift solenoid valve B Refer to “Component Inspection”, AT-115. ● Harness of terminal cord assembly for short or open

2	CHECK POWER SOURCE CIRCUIT

1. Turn ignition switch to “OFF” position.
2. Disconnect TCM harness connector.
3. Check resistance between solenoid valve harness connector E25 terminal No. 1 (OR/L) and TCM harness connector M25 terminal No. 12 (OR/L).

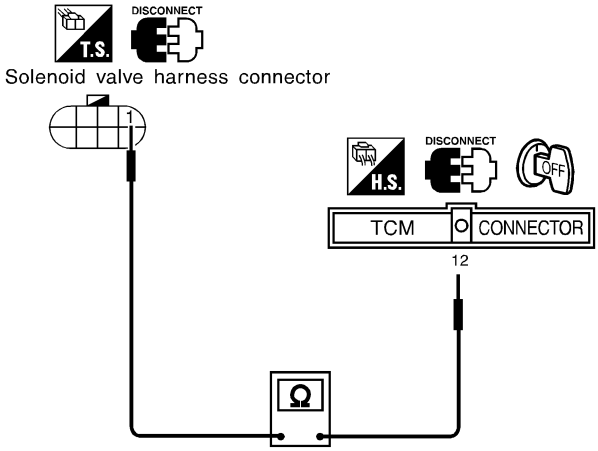

SAT803JA

If OK, check harness for short to ground and short to power.

Is resistance approx. 0Ω?

Yes	▶	GO TO 3.
No	▶	Repair open circuit or short to ground or short to power in harness or connectors.

3	CHECK DTC	
Perform Self-diagnosis Code confirmation procedure, AT-112.		
OK or NG		
OK	▶	**INSPECTION END**
NG	▶	1. Perform TCM input/output signal inspection. 2. If NG, recheck TCM pin terminals for damage or loose connection with harness connector.

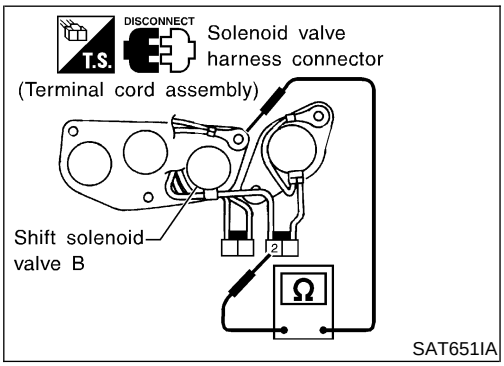

Component Inspection

NMAT0231

SHIFT SOLENOID VALVE B

NMAT0231S01

- For removal, refer to AT-205.

Resistance Check

NMAT0231S0101

- Check resistance.

Terminal			
Connector	Terminal No. (Wire color)		Resistance (Approx.) Ω
E403	2 (W)	Ground	20 - 40

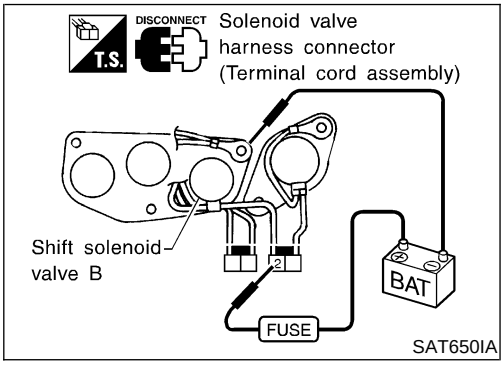

Operation Check

NMAT0231S0102

- Check solenoid valve by listening for its operating sound while applying battery voltage to the solenoid valve harness connector (terminal cord assembly) E403 terminal No. 2 (W) and ground.

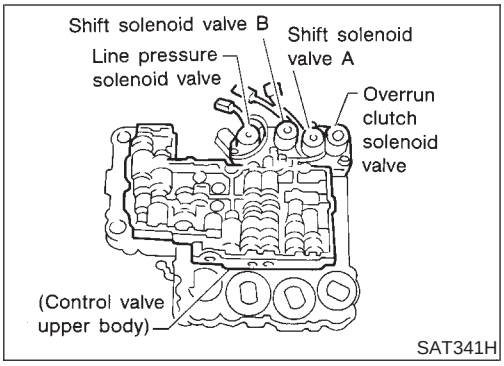

Description

NMAT0232

The overrun clutch solenoid valve is activated by the TCM in response to signals sent from the PNP switch, overdrive control switch, vehicle speed and throttle position sensors. The overrun clutch operation will then be controlled.

TCM TERMINALS AND REFERENCE VALUE

NMAT0232S01

Remarks: Specification data are reference values.

Terminal No.	Wire color	Item	Condition		Judgement standard (Approx.)
20	P/L	Overrun clutch solenoid valve		When overrun clutch solenoid valve operates.	Battery voltage
				When overrun clutch solenoid valve does not operate.	0V

ON BOARD DIAGNOSIS LOGIC

NMAT0232S02

Diagnostic trouble code	Malfunction is detected when ...	Check item (Possible cause)
: OVERRUN CLUTCH S/V	TCM detects an improper voltage drop when it tries to operate the solenoid valve.	• Harness or connectors (The solenoid circuit is open or shorted.) • Overrun clutch solenoid valve
: 6th judgement flicker		

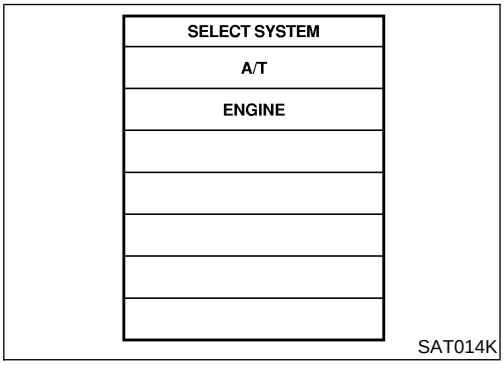

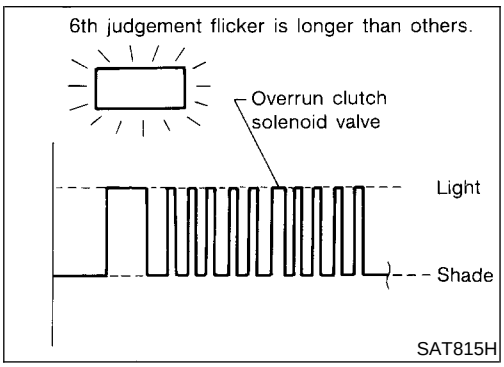

SELF-DIAGNOSIS CODE CONFIRMATION PROCEDURE

NMAT0232S04

After the repair, perform the following procedure to confirm the malfunction is eliminated.

WITH CONSULT-II

NMAT0232S05

1) Start engine.
2) Select “SELF-DIAG RESULTS” mode for “A/T” with CONSULT-II.
3) Drive vehicle under the following conditions:
   Selector lever in “D” position, overdrive control switch in “OFF” position and vehicle speed higher than 10 km/h (6 MPH).

WITHOUT CONSULT-II

NMAT0232S06

1) Start engine.
2) Drive vehicle under the following conditions:
   Selector lever in “D” position, overdrive control switch in “OFF” position and vehicle speed higher than 10 km/h (6 MPH).
3) Perform self-diagnosis.
   Refer to SELF-DIAGNOSTIC PROCEDURE (Without CONSULT-II), AT-37.

Wiring Diagram — AT — OVRCSV

NMAT0233

AT-OVRCSV-01

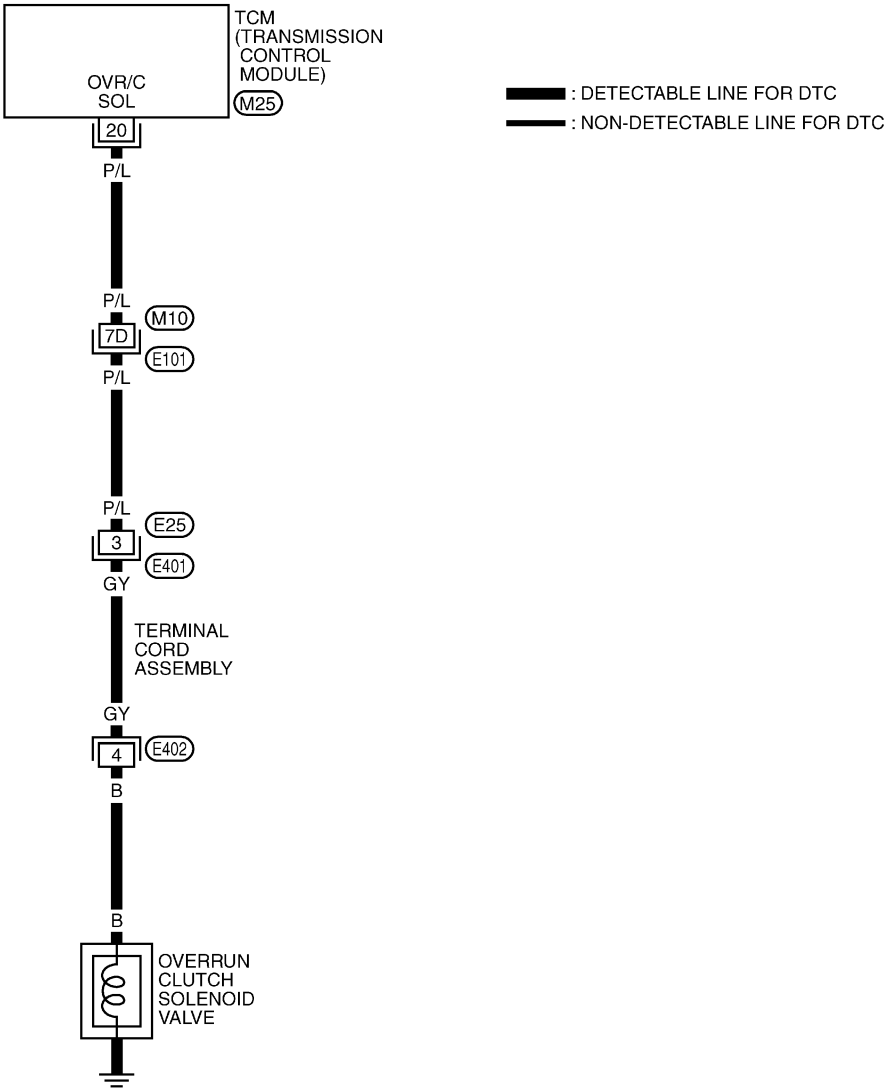

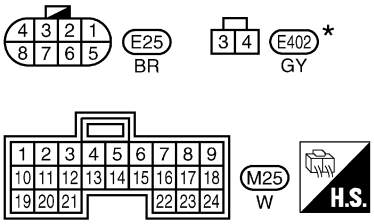

*: THIS CONNECTOR IS NOT SHOWN IN "HARNESS LAYOUT", EL SECTION.

REFER TO THE FOLLOWING.
E101 -SUPER MULTIPLE JUNCTION (SMJ)

TAT260

Diagnostic Procedure

NMAT0234

1	CHECK GROUND CIRCUIT

1. Turn ignition switch to “OFF” position.
2. Disconnect solenoid valve harness connector (terminal cord assembly) E25 in engine compartment.
3. Check resistance between solenoid valve harness connector (terminal cord assembly) E25 terminal No. 3 (P/L) and ground.

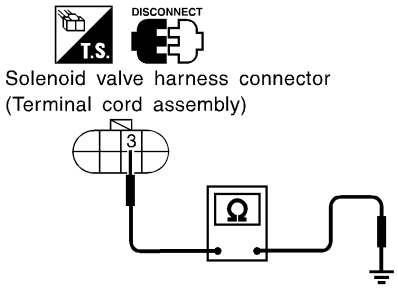

SAT804JA

Is resistance approx. 20 - 40Ω?

Yes	▶	GO TO 2.
No	▶	1. Remove control valve assembly. Refer to AT-205. 2. Check the following items: ● Overrun clutch solenoid valve Refer to “Component Inspection”, AT-119. ● Harness of terminal cord assembly for short or open

2	CHECK POWER SOURCE CIRCUIT

1. Turn ignition switch to “OFF” position.
2. Disconnect TCM harness connector.
3. Check resistance between solenoid valve harness connector E25 terminal No. 3 (P/L) and TCM harness connector M25 terminal No. 20 (P/L).

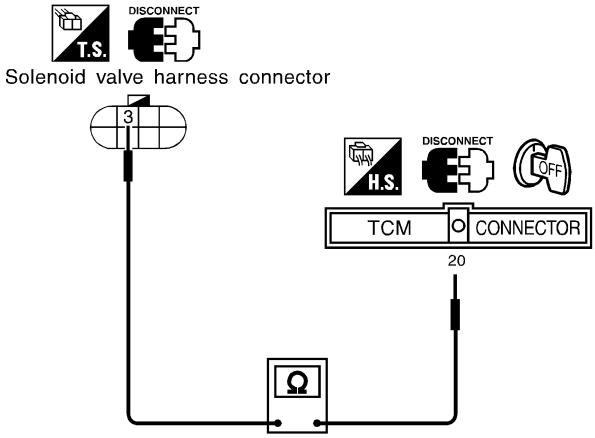

SAT805JA

If OK, check harness for short to ground and short to power.

Is resistance approx 0Ω?

Yes	▶	GO TO 3.
No	▶	Repair open circuit or short to ground or short to power in harness or connectors.

3	CHECK DTC	
Perform Self-diagnosis Code confirmation procedure, AT-116.		
OK or NG		
OK	▶	**INSPECTION END**
NG	▶	1. Perform TCM input/output signal inspection. 2. If NG, recheck TCM pin terminals for damage or loose connection with harness connector.

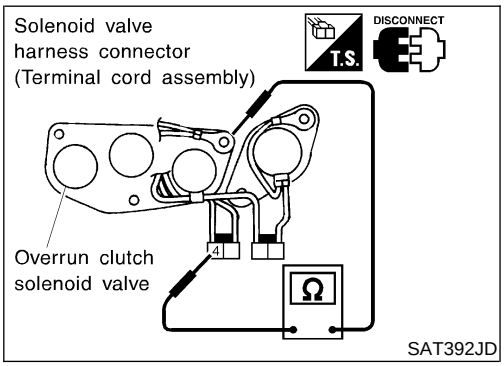

Component Inspection

OVERRUN CLUTCH SOLENOID VALVE

NMAT0235

NMAT0235S01

- For removal, refer to AT-205.

Resistance Check

NMAT0235S0101

- Check resistance.

Terminal			
Connector	Terminal No. (Wire color)		Resistance (Approx.) Ω
E402	4 (B)	Ground	20 - 40

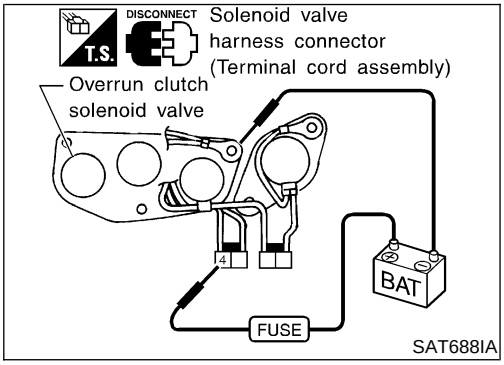

Operation Check

NMAT0235S0102

- Check solenoid valve by listening for its operating sound while applying battery voltage to the solenoid valve harness connector (terminal cord assembly) E403 terminal No. 4 (B) and ground.

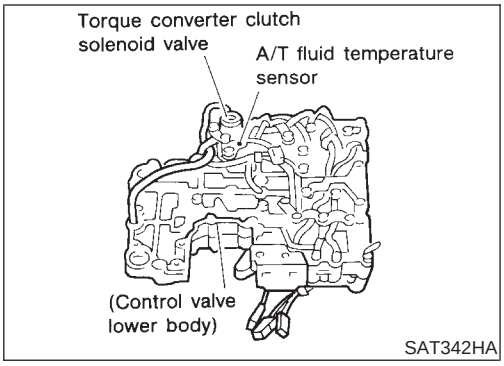

Description

NMAT0236

The torque converter clutch solenoid valve is activated, with the gear in "D_4", by the TCM in response to signals sent from the vehicle speed and throttle position sensors. Lock-up piston operation will then be controlled.

Lock-up operation, however, is prohibited when A/T fluid temperature is too low.

When the accelerator pedal is depressed (less than 2/8) in lock-up condition, the engine speed should not change abruptly. If there is a big jump in engine speed, there is no lock-up.

CONSULT-II REFERENCE VALUE IN DATA MONITOR MODE

NMAT0236S01

Remarks: Specification data are reference values.

Monitor item	Condition	Specification
Torque converter clutch solenoid valve duty	Lock-up "OFF" ↓ Lock-up "ON"	Approximately 4% ↓ Approximately 94%

TCM TERMINALS AND REFERENCE VALUE

NMAT0236S02

Remarks: Specification data are reference values.

Terminal No.	Wire color	Item	Condition		Judgement standard (Approx.)
3	BR/R	Torque converter clutch solenoid valve		When A/T performs lock-up.	8 - 15V
				When A/T does not perform lock-up.	0V

ON BOARD DIAGNOSIS LOGIC

NMAT0236S03

Diagnostic trouble code	Malfunction is detected when ...	Check item (Possible cause)
: T/C CLUTCH SOL/V	TCM detects an improper voltage drop when it tires to operate the solenoid valve.	• Harness or connectors (The solenoid circuit is open or shorted.) • Torque converter clutch solenoid valve
: 7th judgement flicker		

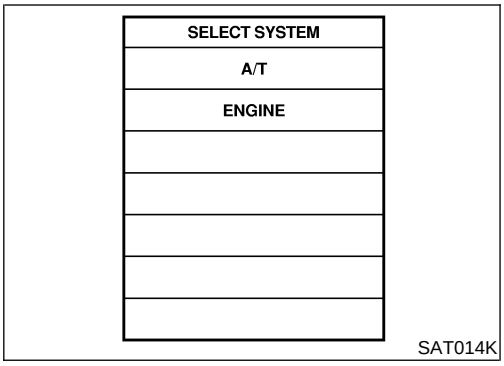

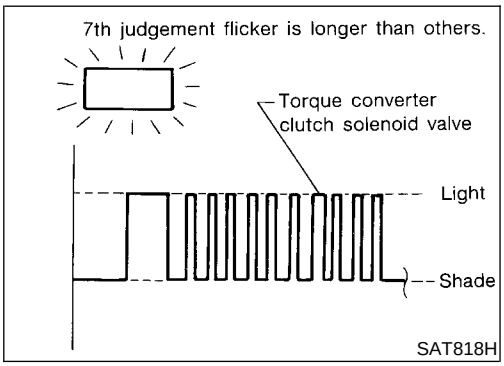

SELF-DIAGNOSIS CODE CONFIRMATION PROCEDURE

NMAT0236S05

After the repair, perform the following procedure to confirm the malfunction is eliminated.

WITH CONSULT-II

NMAT0236S06

1) Start engine.
2) Select "SELF-DIAG RESULTS" mode for A/T with CONSULT-II.
3) Drive vehicle in $D_1 \rightarrow D_2 \rightarrow D_3 \rightarrow D_4 \rightarrow D_4$ lock-up position.

WITHOUT CONSULT-II

NMAT0236S07

1) Start engine.
2) Drive vehicle in $D_1 \rightarrow D_2 \rightarrow D_3 \rightarrow D_4 \rightarrow D_4$ lock-up position.
3) Perform self-diagnosis.
   Refer to SELF-DIAGNOSTIC PROCEDURE (Without CONSULT-II), AT-37.

Wiring Diagram — AT — TCV

NMAT0237

AT-TCV-01

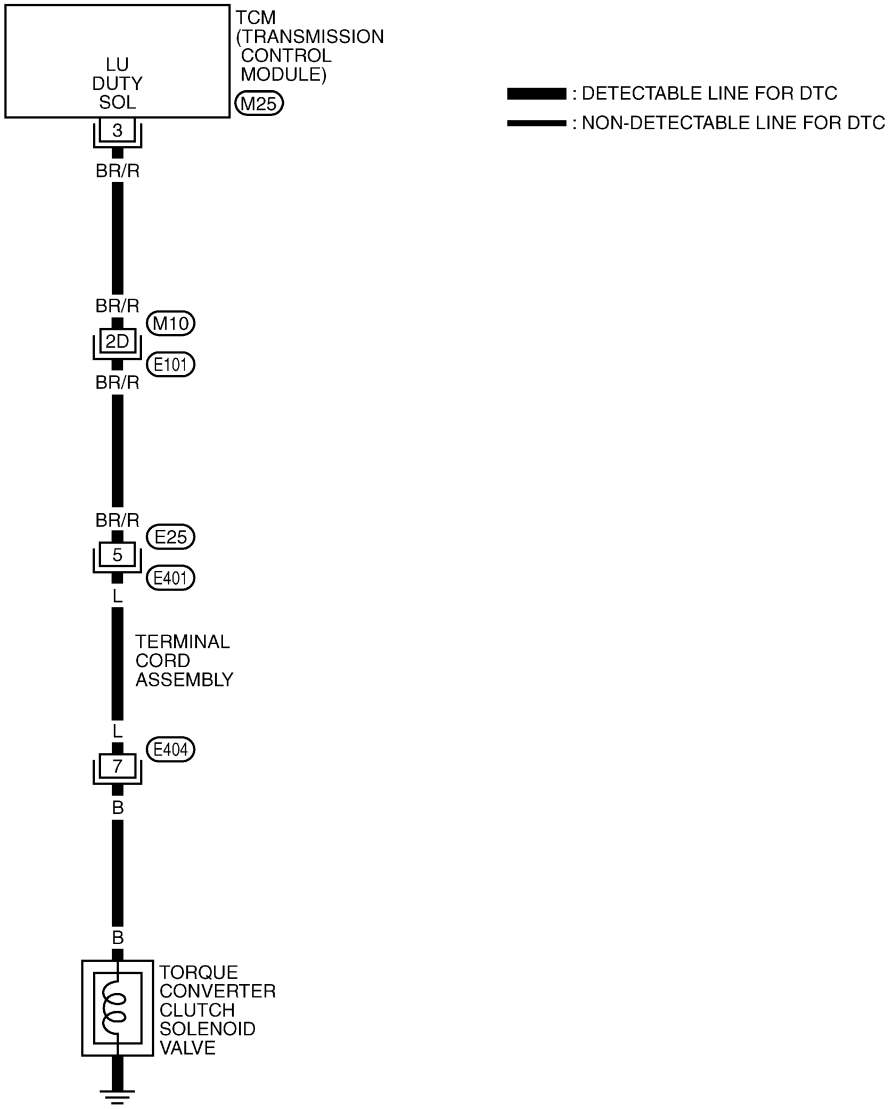

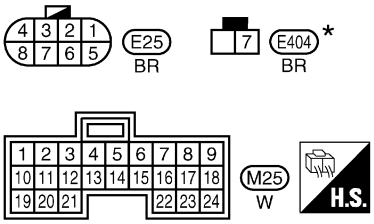

*: THIS CONNECTOR IS NOT SHOWN IN "HARNESS LAYOUT", EL SECTION.

REFER TO THE FOLLOWING.
E101 -SUPER MULTIPLE JUNCTION (SMJ)

TAT261

Diagnostic Procedure

NMAT0238

1	CHECK GROUND CIRCUIT	
1. Turn ignition switch to “OFF” position. 2. Disconnect solenoid valve harness connector (terminal cord assembly) E25 in engine compartment. 3. Check resistance between solenoid valve harness connector (terminal cord assembly) E25 terminal No. 5 (BR/R) and ground. 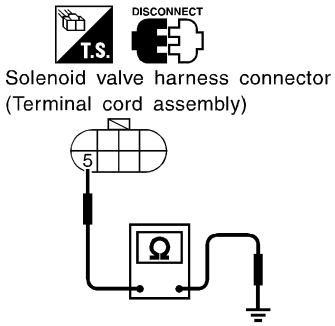 SAT336IB **Is resistance approx. 10 - 20 Ω?**		
Yes	▶	GO TO 2.
No	▶	1. Remove oil pan. Refer to AT-205. 2. Check the following items: ● Torque converter clutch solenoid valve Refer to “Component Inspection”, AT-124. ● Harness of terminal cord assembly for short or open

2	CHECK RESISTANCE	
1. Turn ignition switch to “OFF” position. 2. Disconnect TCM harness connector. 3. Check resistance between solenoid valve harness connector E25 terminal No. 5 (BR/R) and TCM harness connector M25 terminal No. 3 (BR/R). 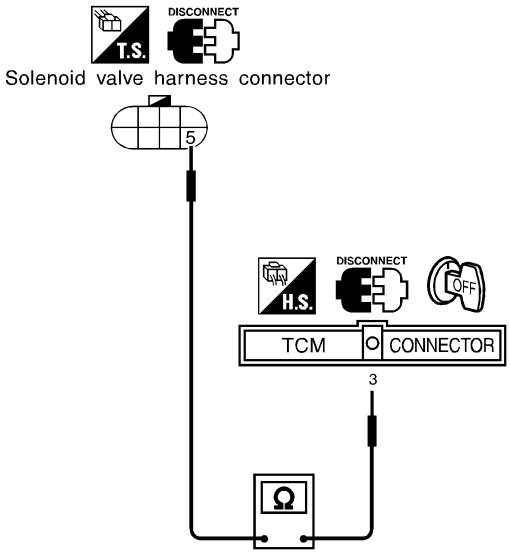 SAT538JB If OK, check harness for short to ground and short to power. **Is resistance approx. 0Ω?**		
Yes	▶	GO TO 3.
No	▶	Repair open circuit or short to ground or short to power in harness or connectors.

3	CHECK DTC	
Perform Self-diagnosis Code confirmation procedure, AT-121.		
OK or NG		
OK	▶	**INSPECTION END**
NG	▶	1. Perform TCM input/output signal inspection. 2. If NG, recheck TCM pin terminals for damage or loose connection with harness connector.

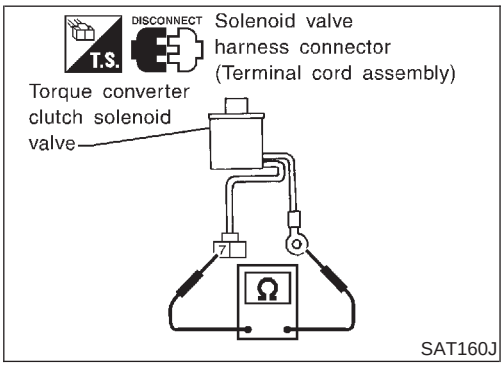

Component Inspection

NMAT0239

TORQUE CONVERTER CLUTCH SOLENOID VALVE

NMAT0239S01

- For removal, refer to AT-205.

Resistance Check

NMAT0239S0101

- Check resistance.

Terminal			
Connector	Terminal No. (Wire color)		Resistance (Approx.) Ω
E404	7 (B)	Ground	10 - 20

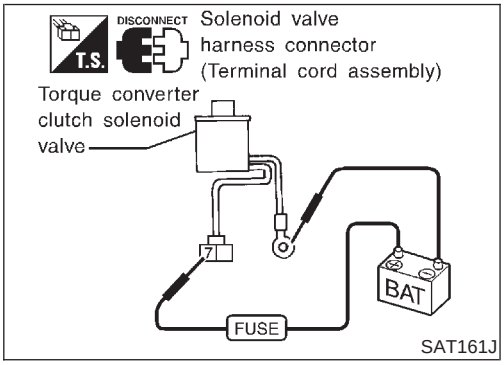

Operation Check

NMAT0239S0102

- Check solenoid valve by listening for its operating sound while applying battery voltage to the solenoid valve harness connector (terminal cord assembly) E404 terminal No. 7 (B) and ground.

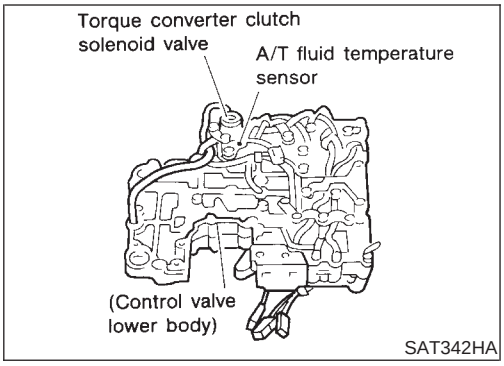

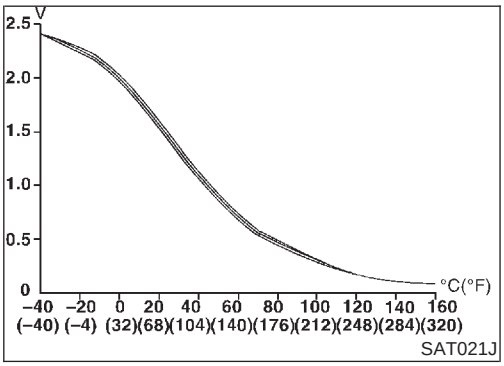

Description

NMAT0240

The A/T fluid temperature sensor detects the A/T fluid temperature and sends a signal to the TCM.

CONSULT-II REFERENCE VALUE IN DATA MONITOR MODE

NMAT0240S01

Remarks: Specification data are reference values.

Monitor item	Condition	Specification
A/T fluid temperature sensor	Cold [20°C (68°F)] ↓ Hot [80°C (176°F)]	Approximately 1.5V ↓ Approximately 0.5V

TCM TERMINALS AND REFERENCE VALUE

NMAT0240S02

Remarks: Specification data are reference values.

Terminal No.	Wire color	Item	Condition		Judgement standard (Approx.)
10	G/OR	Power source	ON	When turning ignition switch to “ON”.	Battery voltage
				When turning ignition switch to “OFF”.	0V
19	G/OR	Power source		Same as No. 10	
28	R/W	Power source (Memory back-up)	ON or OFF	When turning ignition switch to “OFF”.	Battery voltage
				When turning ignition switch to “ON”.	Battery voltage
42	G/Y	Throttle position sensor (Ground)	ON	—	—
47	W/R	A/T fluid temperature sensor		When ATF temperature is 20°C (68°F).	1.5V
				When ATF temperature is 80°C (176°F).	0.5V

ON BOARD DIAGNOSIS LOGIC

NMAT0240S03

Diagnostic trouble code	Malfunction is detected when ...	Check item (Possible cause)
: BATT/FLUID TEMP SEN	TCM receives an excessively low or high voltage from the sensor.	• Harness or connectors (The sensor circuit is open or shorted.) • A/T fluid temperature sensor
: 8th judgement flicker		

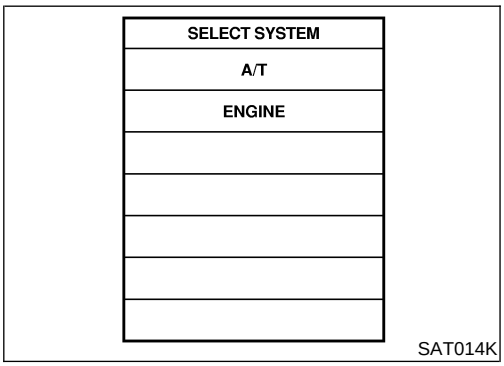

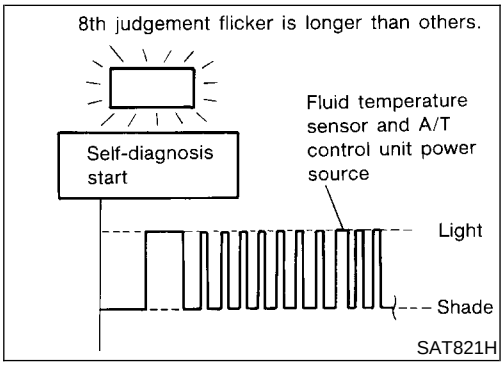

SELF-DIAGNOSIS CODE CONFIRMATION PROCEDURE

NMAT0240S05

After the repair, perform the following procedure to confirm the malfunction is eliminated.

WITH CONSULT-II

NMAT0240S06

1) Start engine.
2) Select "SELF-DIAG RESULTS" mode for "A/T" with CONSULT-II.
3) Drive vehicle under the following conditions:
   Selector lever in "D" position, vehicle speed higher than 10 km/h (6 MPH), throttle opening greater than 1/8 of the full open position, engine speed higher than 450 rpm and driving for more than 10 minutes.

WITHOUT CONSULT-II

NMAT0240S07

1) Start engine.
2) Drive vehicle under the following conditions:
   Selector lever in "D" position, vehicle speed higher than 10 km/h (6 MPH), throttle opening greater than 1/8 of the full open position, engine speed higher than 450 rpm and driving for more than 10 minutes.
3) Perform self-diagnosis.
   Refer to SELF-DIAGNOSTIC PROCEDURE (Without CONSULT-II), AT-37.

Wiring Diagram — AT — BA/FTS

NMAT0241

AT-BA/FTS-01

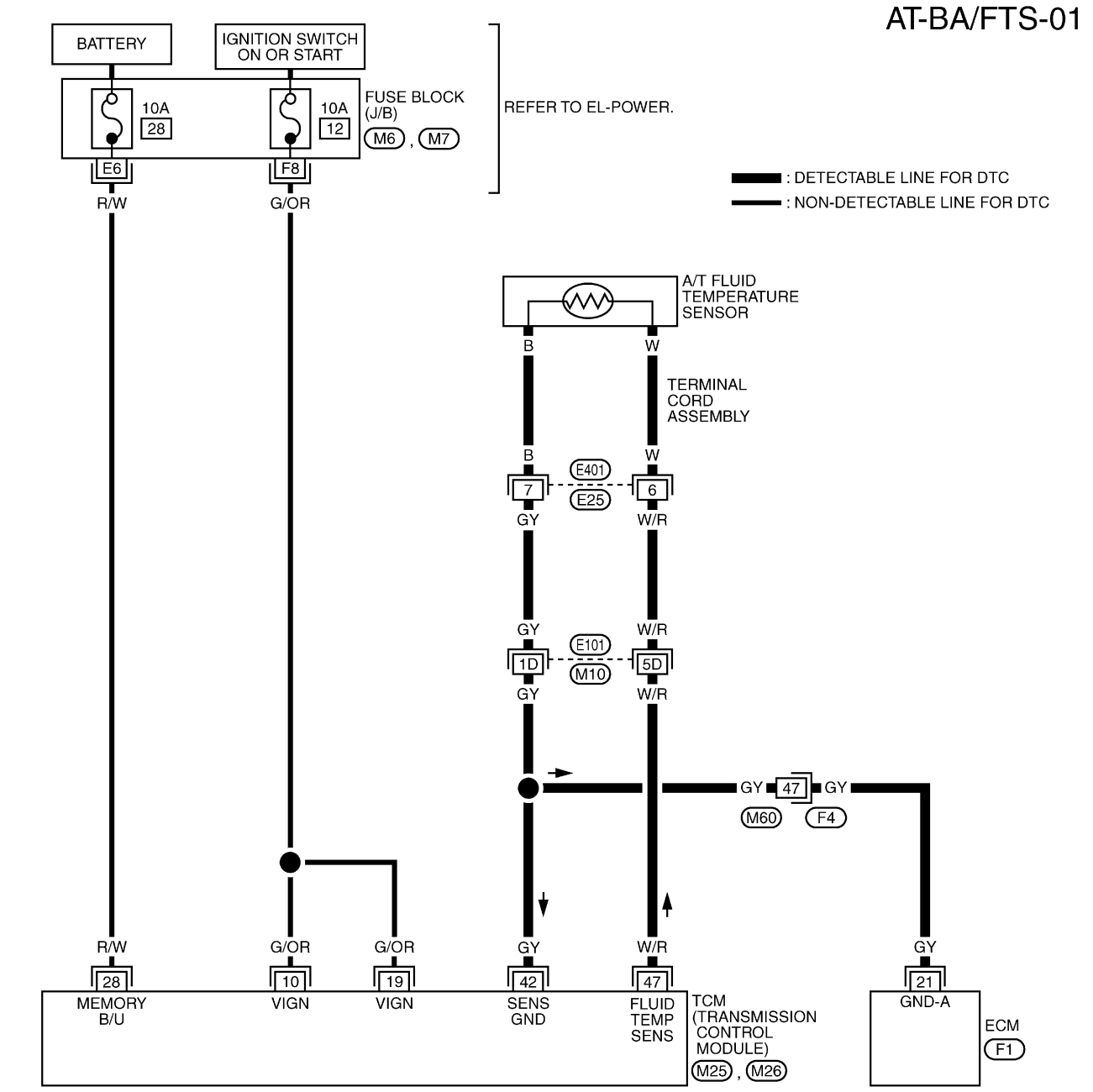

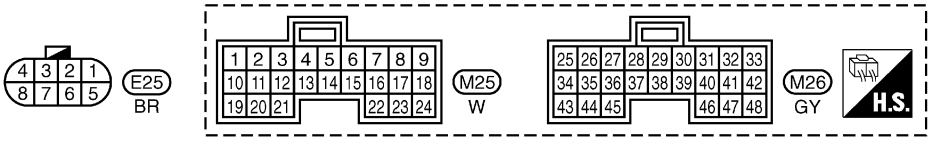

REFER TO THE FOLLOWING.
E101 , F4 -SUPER MULTIPLE JUNCTION (SMJ)
M6 , M7 -FUSE BLOCK-JUNCTION BOX (J/B)

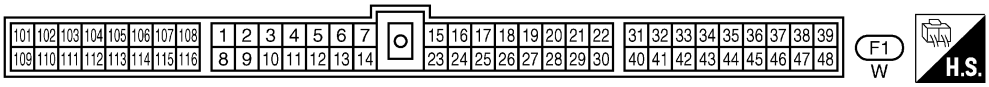

TAT262

Diagnostic Procedure

NMAT0242

1	CHECK TCM POWER SOURCE STEP 1

1. Turn ignition switch to ON position.
   (Do not start engine.)
2. Check voltage between TCM harness connector M25, M26 terminal Nos. 10 (G/OR), 19 (G/OR), 28 (R/W) and ground.

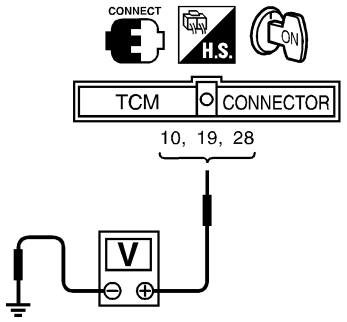

Voltage:
Battery voltage

SAT611J

OK or NG

OK	▶	GO TO 2.
NG	▶	GO TO 3.

2	CHECK TCM POWER SOURCE STEP 2

1. Turn ignition switch to OFF position.
2. Check voltage between TCM harness connector M26 terminal No. 28 (R/W) and ground.

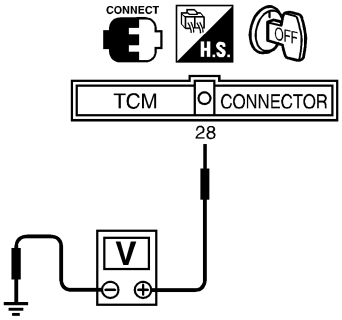

Voltage:
Battery voltage

SAT612JE

OK or NG

OK	▶	GO TO 4.
NG	▶	GO TO 3.

3	DETECT MALFUNCTIONING ITEM

Check the following items:
- Harness for short or open between ignition switch and TCM terminals 10, 19 and 28 (Main harness)
- Ignition switch and 10A fuse [No. 12 or 28, located in the fuse block (J/B)]
  Refer to EL-7, “Schematic”.

OK or NG

OK	▶	GO TO 4.
NG	▶	Repair or replace damaged parts.

4	CHECK TCM GROUND CIRCUIT	
1. Turn ignition switch to OFF position. 2. Disconnect TCM harness connector. 3. Check continuity between TCM terminal Nos. 25, 48 and ground. Refer to "Wiring Diagram — AT — BA/FTS", AT-127. **Continuity should exist.** If OK, check harness for short to ground and short to power.		
OK or NG		
OK	▶	GO TO 5.
NG	▶	Repair open circuit or short to ground or short to power in harness or connectors.

5	CHECK A/T FLUID TEMPERATURE SENSOR WITH TERMINAL CORD ASSEMBLY	
1. Turn ignition switch to "OFF" position. 2. Disconnect solenoid valve harness connector (terminal cord assembly) E25 in engine compartment. 3. Check resistance between solenoid valve harness connector (terminal cord assembly) E25 terminals No. 6 (W) and No. 7 (B) when A/T is cold [20°C (68°F)].		
 Solenoid valve harness connector (Terminal cord assembly) 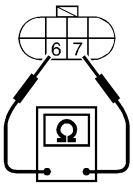 SAT734JA		
Is resistance approx. 2.5 kΩ?		
Yes	▶	GO TO 6.
No	▶	1. Remove oil pan. 2. Check the following items: ● A/T fluid temperature sensor Refer to "Component Inspection", AT-131. ● Harness of terminal cord assembly for short or open

6	CHECK INPUT SIGNAL OF A/T FLUID TEMPERATURE SENSOR

With CONSULT-II

1. Start engine.
2. Select "TCM INPUT SIGNALS" in "DATA MONITOR" mode for "A/T" with CONSULT-II.
3. Read out the value of "FLUID TEMP SE".

Voltage:
Cold [20°C (68°F)] → Hot [80°C (176°F)]:
Approximately 1.5V → 0.5V

DATA MONITOR	
MONITORING	
VHCL/S SE-A/T	XXX km/h
VHCL/S SE-MTR	XXX km/h
THRTL POS SEN	XXX V
FLUID TEMP SE	XXX V
BATTERY VOLT	XXX V

SAT614J

Without CONSULT-II

1. Start engine.
2. Check voltage between TCM harness connector M26 terminal No. 47 (W/R) and ground while warming up A/T.

Voltage:
Cold [20°C (68°F)] → Hot [80°C (176°F)]:
Approximately 1.5V → 0.5V

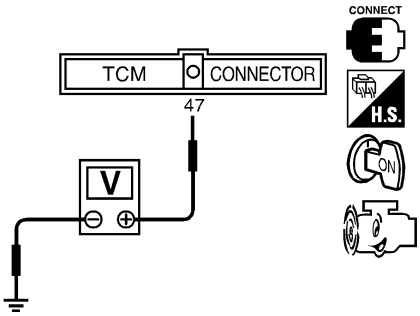

SAT518JA

OK or NG

OK	▶	GO TO 7.
NG	▶	**Check the following item:** ● Harness for short or open between TCM and terminal cord assembly (Main harness)

7	CHECK DTC

Perform Diagnostic Trouble Code (DTC) confirmation Procedure, AT-126.

OK or NG

OK	▶	**INSPECTION END**
NG	▶	● Perform TCM input/output signal inspection. ● If NG, recheck TCM pin terminals for damage or loose connection with harness connector.

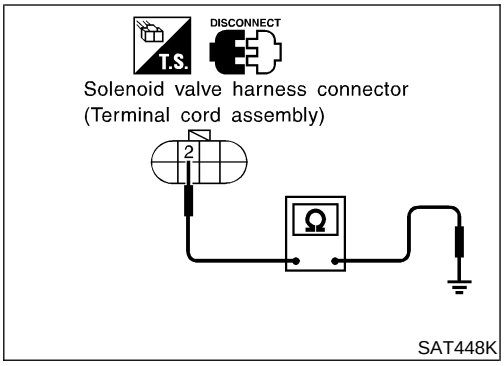

Component Inspection

NMAT0243

A/T FLUID TEMPERATURE SENSOR

NMAT0243S01

- For removal, refer to AT-205.
- Check resistance.

Terminals				
Connector	Terminal No. (Wire color)		Temperature °C (°F)	Resistance (Approx.) kΩ
E25	6 (W)	7 (B)	20 (68)	2.5
			80 (176)	0.3

Description

NMAT0244

The engine speed signal is sent from the ECM to the TCM.

TCM TERMINALS AND REFERENCE VALUE

NMAT0244S01

Remarks: Specification data are reference values.

Terminal No.	Wire color	Item	Condition		Judgement standard (Approx.)
39	L/OR	Engine speed signal	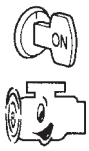	Refer to EC-76, “ECM Inspection Table”.	

ON BOARD DIAGNOSIS LOGIC

NMAT0244S02

Diagnostic trouble code	Malfunction is detected when ...	Check item (Possible cause)
: ENGINE SPEED SIG	TCM does not receive the proper voltage signal from ECM.	● Harness or connectors (The sensor circuit is open or shorted.)
: 9th judgement flicker		

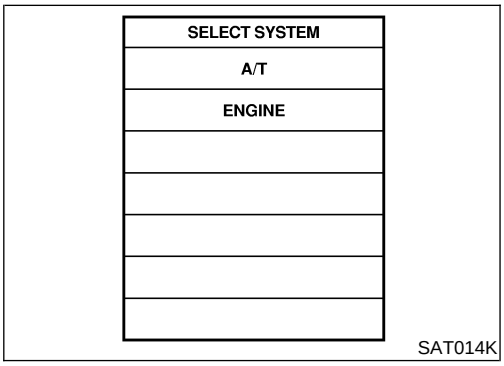

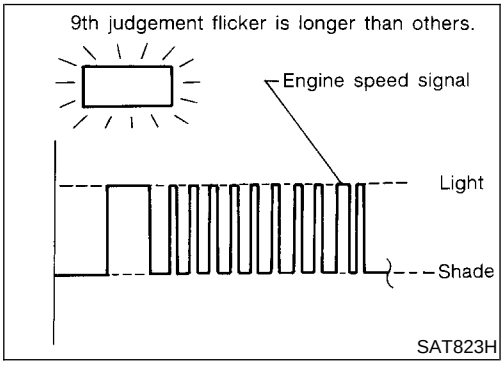

SELF-DIAGNOSIS CODE CONFIRMATION PROCEDURE

NMAT0244S04

After the repair, perform the following procedure to confirm the malfunction is eliminated.

WITH CONSULT-II

NMAT0244S05

1) Start engine.
2) Select “SELF-DIAG RESULTS” mode for “A/T” with CONSULT-II.
3) Drive vehicle under the following conditions:
   Selector lever in “D” position, vehicle speed higher than 10 km/h (6 MPH), throttle opening greater than 1/8 of the full throttle position and driving for more than 10 seconds.

WITHOUT CONSULT-II

NMAT0244S06

1) Start engine.
2) Drive vehicle under the following conditions:
   Selector lever in “D” position, vehicle speed higher than 10 km/h (6 MPH), throttle opening greater than 1/8 of the full throttle position and driving for more than 10 seconds.
3) Perform self-diagnosis.
   Refer to SELF-DIAGNOSTIC PROCEDURE (Without CONSULT-II), AT-37.

Wiring Diagram — AT — ENGSS

NMAT0245

AT-ENGSS-01

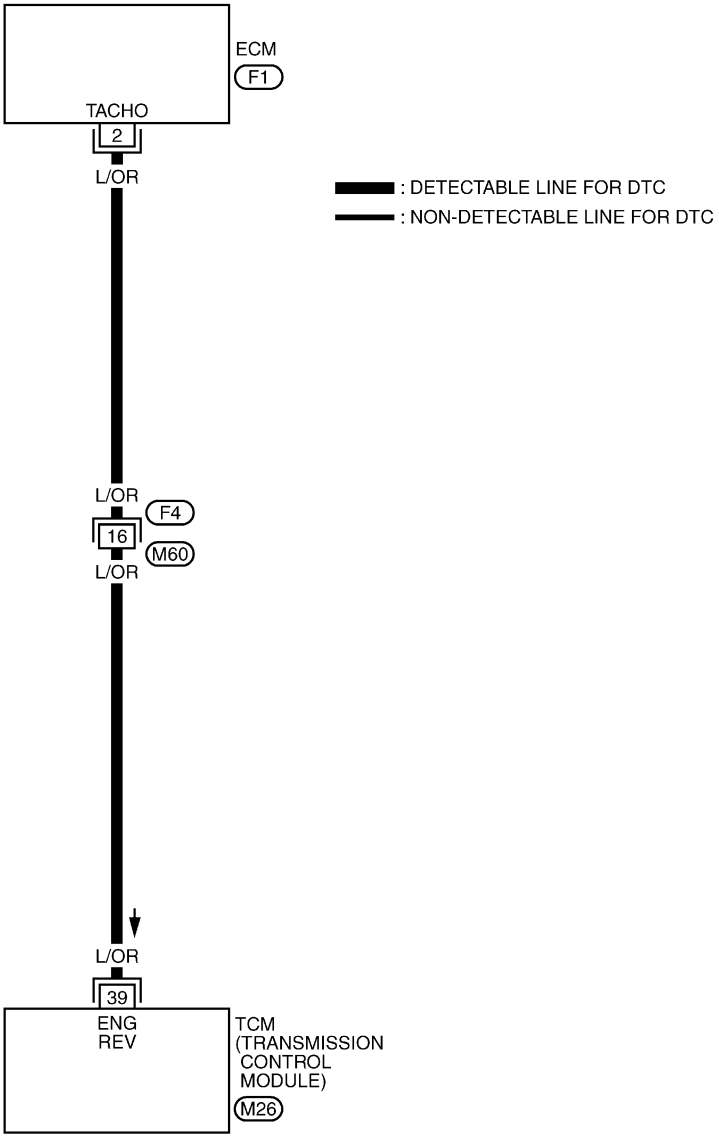

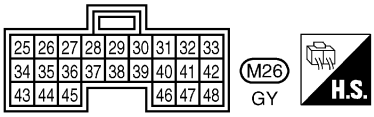

REFER TO THE FOLLOWING.
F4 -SUPER MULTIPLE JUNCTION (SMJ)

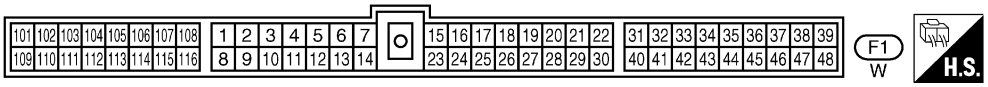

TAT263

Diagnostic Procedure

NMAT0246

1	CHECK DTC WITH ECM
Perform diagnostic test mode II (self-diagnostic results) for engine control. Check ignition signal circuit condition.	
OK or NG	
OK (With CONSULT-II) ▶	GO TO 2.
OK (Without CONSULT-II) ▶	GO TO 3.
NG ▶	Check ignition signal circuit for engine control. Refer to EC-110, “Component Description”.

2	CHECK INPUT SIGNAL (WITH CONSULT-II)
With CONSULT-II 1. Start engine. 2. Select “TCM INPUT SIGNALS” in “DATA MONITOR” mode for “A/T” with CONSULT-II. 3. Read out the value of “ENGINE SPEED”. Check engine speed changes according to throttle position.	

DATA MONITOR	
MONITORING	
ENGINE SPEED	XXX rpm
TURBINE REV	XXX rpm
OVERDRIVE SW	ON
PN POSI SW	OFF
R POSITION SW	OFF

SAT645J

OK or NG	
OK ▶	GO TO 4.
NG ▶	**Check the following items:** ● Harness for short or open between TCM and ECM ● Resistor ● Ignition coil Refer to EC-110, “Component Description”.

3	CHECK INPUT SIGNAL (WITHOUT CONSULT-II)

Without CONSULT-II
1. Start engine.
2. Check voltage between TCM harness connector M26 terminal No. 39 (L/OR) and ground.

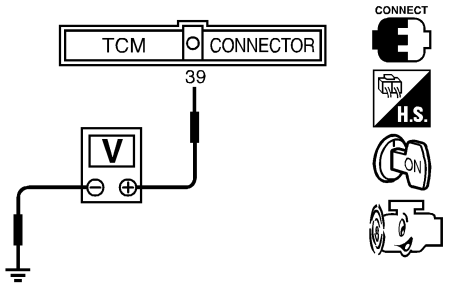

SAT520JC

Does battery voltage (idle speed)? Refer to EC-76**, "ECM Inspection Table".**

Yes	▶	GO TO 4.
No	▶	**Check the following items:** ● Harness for short or open between TCM and ECM ● Resistor ● Ignition coil Refer to EC-110, "Component Description".

4	CHECK DTC

Perform Self-diagnosis Code confirmation procedure, AT-132.

OK or NG

OK	▶	**INSPECTION END**
NG	▶	1. Perform TCM input/output signal inspection. 2. If NG, recheck TCM pin terminals for damage or loose connection with harness connector.

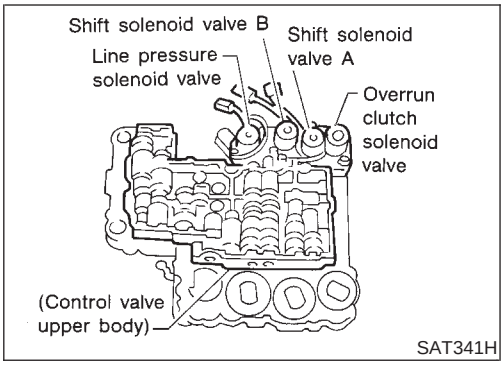

Description

NMAT0247

The line pressure solenoid valve regulates the oil pump discharge pressure to suit the driving condition in response to a signal sent from the TCM.

The line pressure duty cycle value is not consistent when the closed throttle position switch is "ON". To confirm the line pressure duty cycle at low pressure, the accelerator (throttle) should be open until the closed throttle position switch is "OFF".

CONSULT-II REFERENCE VALUE IN DATA MONITOR MODE

NMAT0247S01

Remarks: Specification data are reference values.

Monitor item	Condition	Specification
Line pressure solenoid valve duty	Small throttle opening (Low line pressure) ↓ Large throttle opening (High line pressure)	Approximately 24% ↓ Approximately 95%

NOTE:

The line pressure duty cycle value is not consistent when the closed throttle position switch is "ON". To confirm the line pressure duty cycle at low pressure, the accelerator (throttle) should be open until the closed throttle position switch is "OFF".

TCM TERMINALS AND REFERENCE VALUE

NMAT0247S02

Remarks: Specification data are reference values.

Terminal No.	Wire color	Item	Condition		Judgement standard (Approx.)
1	OR/B	Line pressure solenoid valve		When releasing accelerator pedal after warming up engine.	1.5 - 2.5V
				When depressing accelerator pedal fully after warming up engine.	0V
2	P	Line pressure solenoid valve (with dropping resistor)		When releasing accelerator pedal after warming up engine.	5 - 14V
				When depressing accelerator pedal fully after warming up engine.	0V

ON BOARD DIAGNOSIS LOGIC

NMAT0247S03

Diagnostic trouble code	Malfunction is detected when ...	Check item (Possible cause)
: LINE PRESSURE S/V	TCM detects an improper voltage drop when it tries to operate the solenoid valve.	• Harness or connectors (The solenoid circuit is open or shorted.) • Line pressure solenoid valve
: 10th judgement flicker		

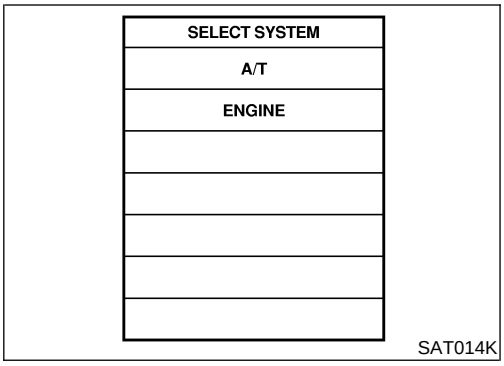

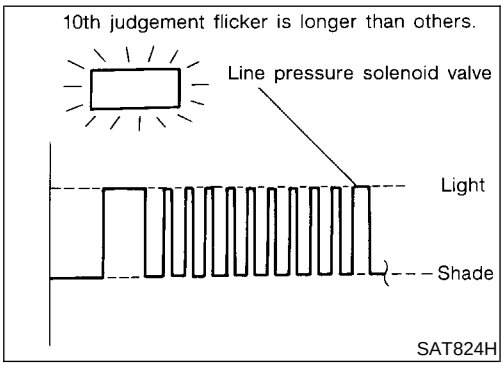

SELF-DIAGNOSIS CODE CONFIRMATION PROCEDURE

NMAT0247S05

After the repair, perform the following procedure to confirm the malfunction is eliminated.

WITH CONSULT-II

NMAT0247S06

1) Start engine.
2) Select "SELF-DIAG RESULTS" mode for "A/T" with CONSULT-II.
3) With brake pedal depressed, shift the lever from "P" → "N" → "D" → "N" → "P" positions.

WITHOUT CONSULT-II

NMAT0247S07

1) Start engine.
2) With brake pedal depressed, shift the lever from "P" → "N" → "D" → "N" → "P" positions.
3) Perform self-diagnosis.
   Refer to SELF-DIAGNOSTIC PROCEDURE (Without CONSULT-II), AT-37.

Wiring Diagram — AT — LPSV

NMAT0248

AT-LPSV-01

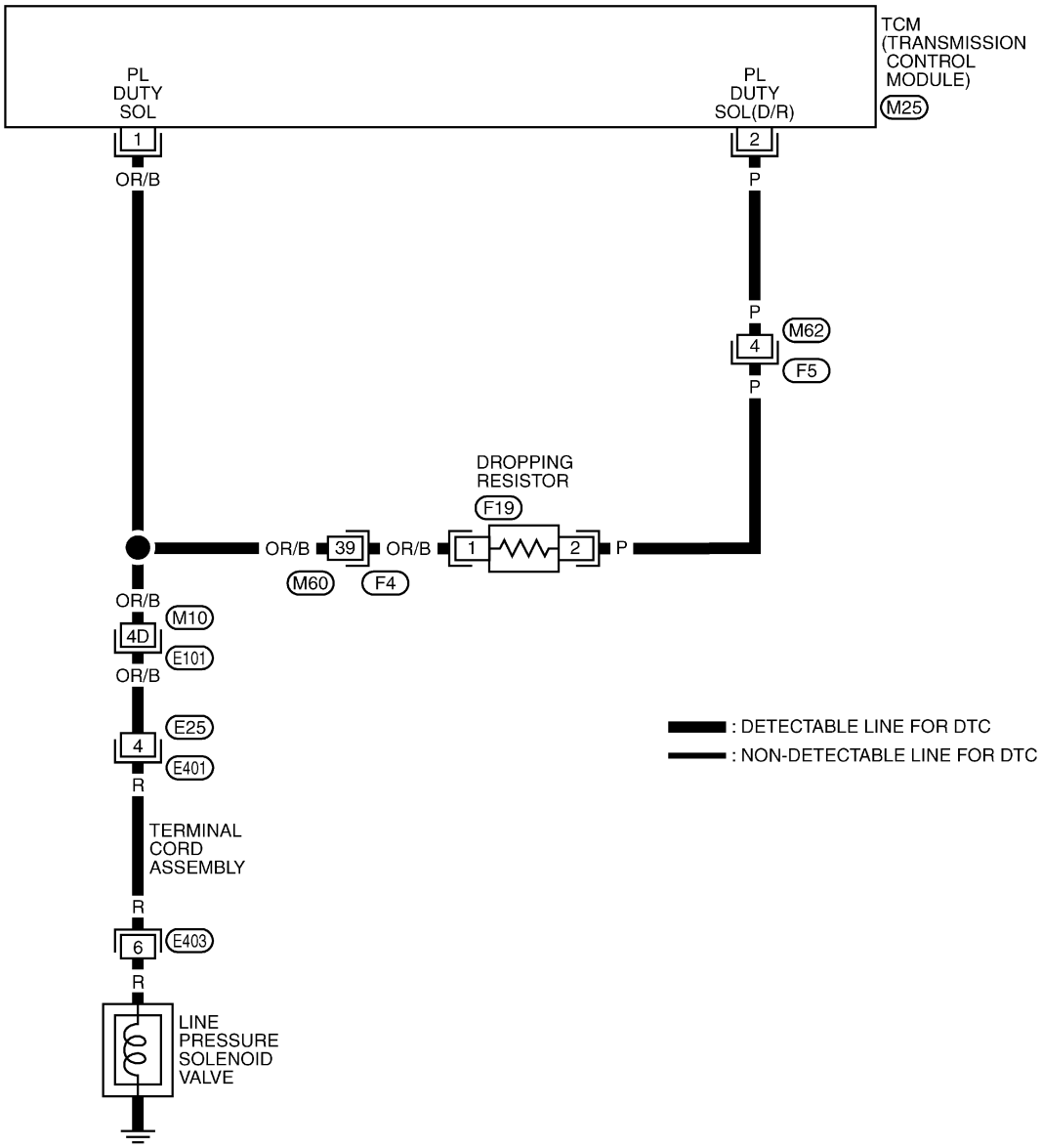

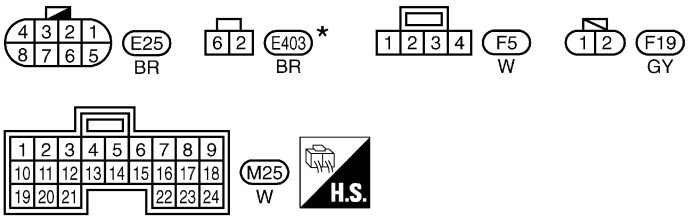

*: THIS CONNECTOR IS NOT SHOWN IN "HARNESS LAYOUT", EL SECTION.

REFER TO THE FOLLOWING.
E101 , F4 -SUPER MULTIPLE JUNCTION (SMJ)

TAT264

Diagnostic Procedure

NMAT0249

1	CHECK GROUND CIRCUIT

1. Turn ignition switch to “OFF” position.
2. Disconnect solenoid valve harness connector (terminal cord assembly) E25 connector in engine compartment.
3. Check resistance between solenoid valve harness connector (terminal cord assembly) E25 terminal No. 4 (R) and ground.

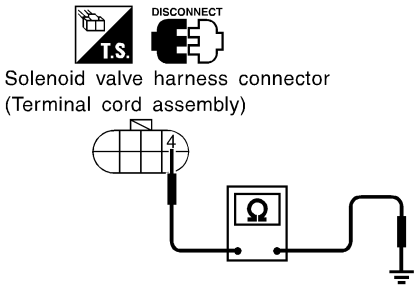

SAT806JA

Is resistance approx. 2.5 - 5Ω?

Yes	▶	GO TO 2.
No	▶	1. Remove control valve assembly. Refer to AT-205. 2. Check the following items: ● Line pressure solenoid valve Refer to “Component Inspection”, AT-140. ● Harness of terminal cord assembly for short or open

2	CHECK POWER SOURCE CIRCUIT

1. Turn ignition switch to “OFF” position.
2. Disconnect TCM harness connector.
3. Check resistance between solenoid valve harness connector E25 terminal No. 4 (OR/B) and TCM harness connector M25 terminal No. 2 (P).

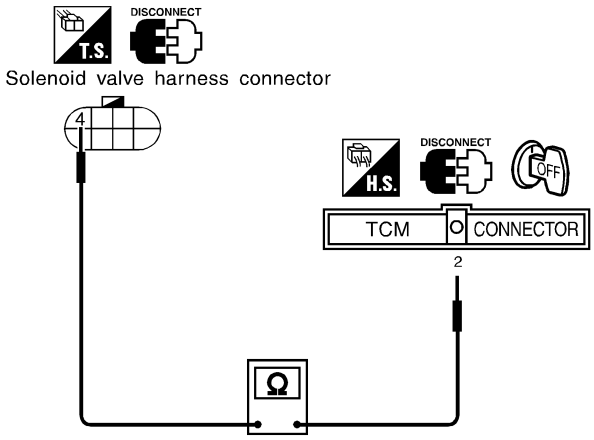

SAT807JA

Is resistance approx. 11.2 - 12.8Ω?

Yes	▶	GO TO 3.
No	▶	**Check the following items:** ● Dropping resistor Refer to “Component Inspection”, AT-140. ● Harness for short or open between TCM terminal 2 and terminal cord assembly (Main harness)

3	CHECK POWER SOURCE CIRCUIT

1. Turn ignition switch to "OFF" position.
2. Check resistance between solenoid valve harness connector (terminal cord assembly) E25 terminal No. 4 (R) and TCM harness connector M25 terminal No. 1 (OR/B).

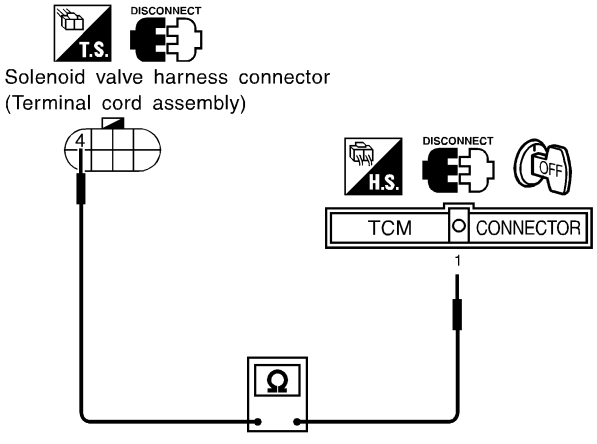

Is resistance approx. 0Ω?

Yes	▶	GO TO 4.
No	▶	Repair or replace harness between TCM terminal 1 and terminal cord assembly.

4	CHECK DTC

Perform Self-diagnosis Code confirmation procedure, AT-137.

OK or NG

OK	▶	**INSPECTION END**
NG	▶	1. Perform TCM input/output signal inspection. 2. If NG, recheck TCM pin terminals for damage or loose connection with harness connector.

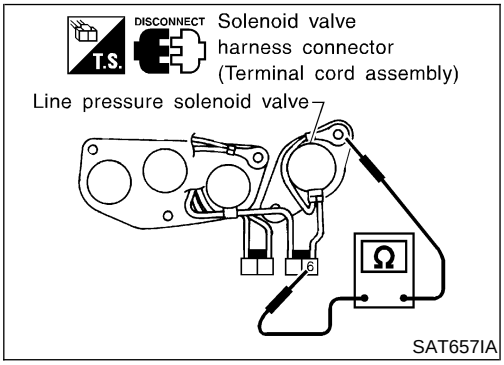

Component Inspection

NMAT0250

LINE PRESSURE SOLENOID VALVE

NMAT0250S01

- For removal, refer to AT-205.

Resistance Check

NMAT0250S0101

- Check resistance.

Terminal			
Connector	Terminal No. (Wire color)		Resistance (Approx.) Ω
E403	6 (R)	Ground	2.5 - 5

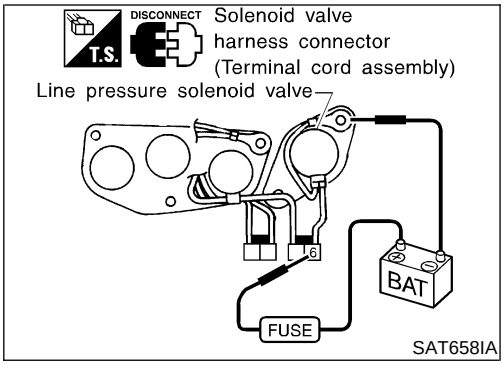

Operation Check

NMAT0250S0102

- Check solenoid valve by listening for its operating sound while applying battery voltage to the solenoid valve harness connector (terminal cord assembly) E403 terminal No. 6 (R) and ground.

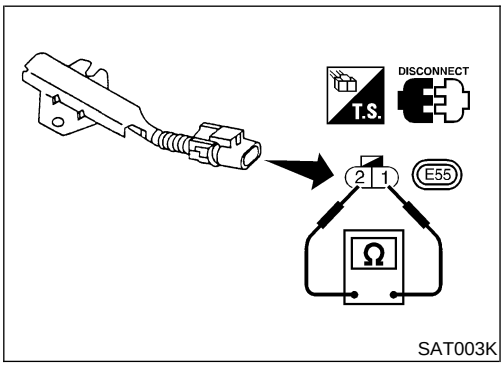

DROPPING RESISTOR

NMAT0250S02

- Check resistance.

Terminal			
Connector	Terminal No. (Wire color)		Resistance (Approx.) Ω
F19	1 (OR/B)	2 (P)	11.2 - 12.8

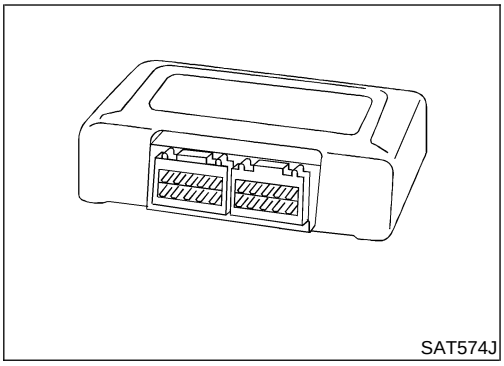
SAT574J

Description

NMAT0207

The TCM consists of a microcomputer and connectors for signal input and output and for power supply. The unit controls the A/T.

ON BOARD DIAGNOSIS LOGIC

NMAT0207S01

Diagnostic trouble code	Malfunction is detected when ...	Check item (Possible cause)
: CONTROL UNIT (RAM) : CONTROL UNIT (ROM)	TCM memory (RAM) or (ROM) is malfunctioning.	TCM

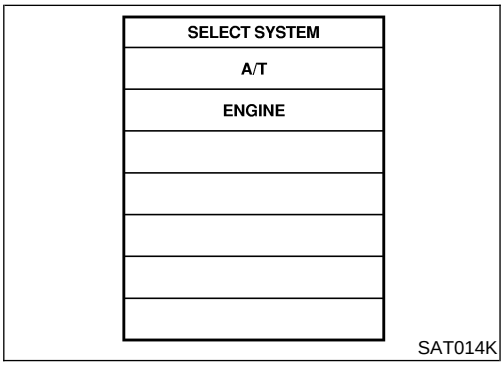

SAT014K

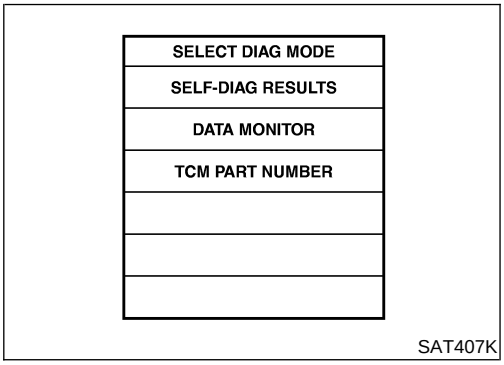

SAT407K

SELF-DIAGNOSIS CODE CONFIRMATION PROCEDURE

NMAT0207S02

NOTE:
If "SELF-DIAGNOSIS CODE CONFIRMATION PROCEDURE" has been previously conducted, always turn ignition switch "OFF" and wait at least 5 seconds before conducting the next test.

WITH CONSULT-II

NMAT0207S03

1) Turn ignition switch "ON" and select "DATA MONITOR" mode for A/T with CONSULT-II.
2) Start engine.
3) Run engine for at least 2 seconds at idle speed.

Diagnostic Procedure

=NMAT0208

1	CHECK DTC	
With CONSULT-II 1. Turn ignition switch “ON” and select “SELF DIAG RESULTS” mode for A/T with CONSULT-II. 2. Touch “ERASE”. Perform Self-diagnosis Code confirmation procedure. See previous page. **Is the “CONTROL UNIT (RAM) or CONTROL UNIT (ROM)” displayed again?**		
Yes	▶	Replace TCM.
No	▶	**INSPECTION END**

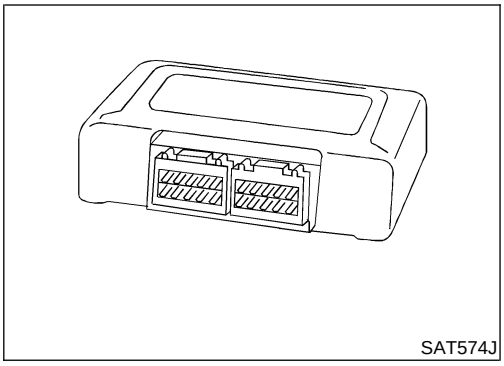
SAT574J

Description

NMAT0215

The TCM consists of a microcomputer and connectors for signal input and output and for power supply. The unit controls the A/T.

ON BOARD DIAGNOSIS LOGIC

NMAT0215S01

Diagnostic trouble code	Malfunction is detected when ...	Check item (Possible cause)
: CONT UNIT (EEPROM)	TCM memory (EEPROM) is malfunctioning.	TCM

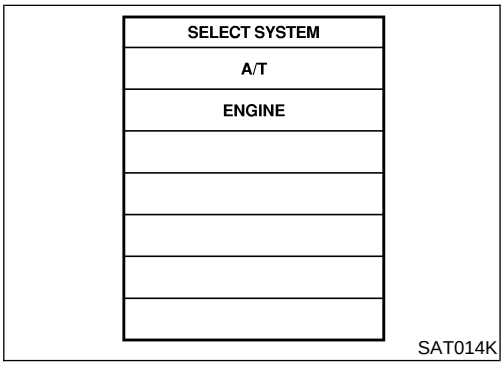

SAT014K

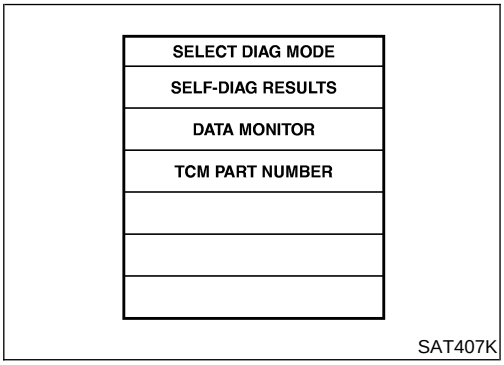

SAT407K

SELF-DIAGNOSIS CODE CONFIRMATION PROCEDURE

NMAT0215S02

NOTE:
If "SELF-DIAGNOSIS CODE CONFIRMATION PROCEDURE" has been previously conducted, always turn ignition switch "OFF" and wait at least 5 seconds before conducting the next test.

WITH CONSULT-II

NMAT0215S03

1) Turn ignition switch "ON" and select "DATA MONITOR" mode for A/T with CONSULT-II.
2) Start engine.
3) Run engine for at least 2 seconds at idle speed.

Diagnostic Procedure

=NMAT0216

1	CHECK DTC	
With CONSULT-II 1. Turn ignition switch “ON” and select “SELF DIAG RESULTS” mode for A/T with CONSULT-II. 2. Move selector lever to “R” position. 3. Depress accelerator pedal (Full throttle position). 4. Touch “ERASE”. 5. Turn ignition switch “OFF” position for 10 seconds. Perform Self-diagnosis Code confirmation procedure. See previous page. **Is the “CONT UNIT (EEPROM)” displayed again?**		
Yes	▶	Replace TCM.
No	▶	**INSPECTION END**

Wiring Diagram — AT — NONDTC

NMAT0203

AT-NONDTC-01

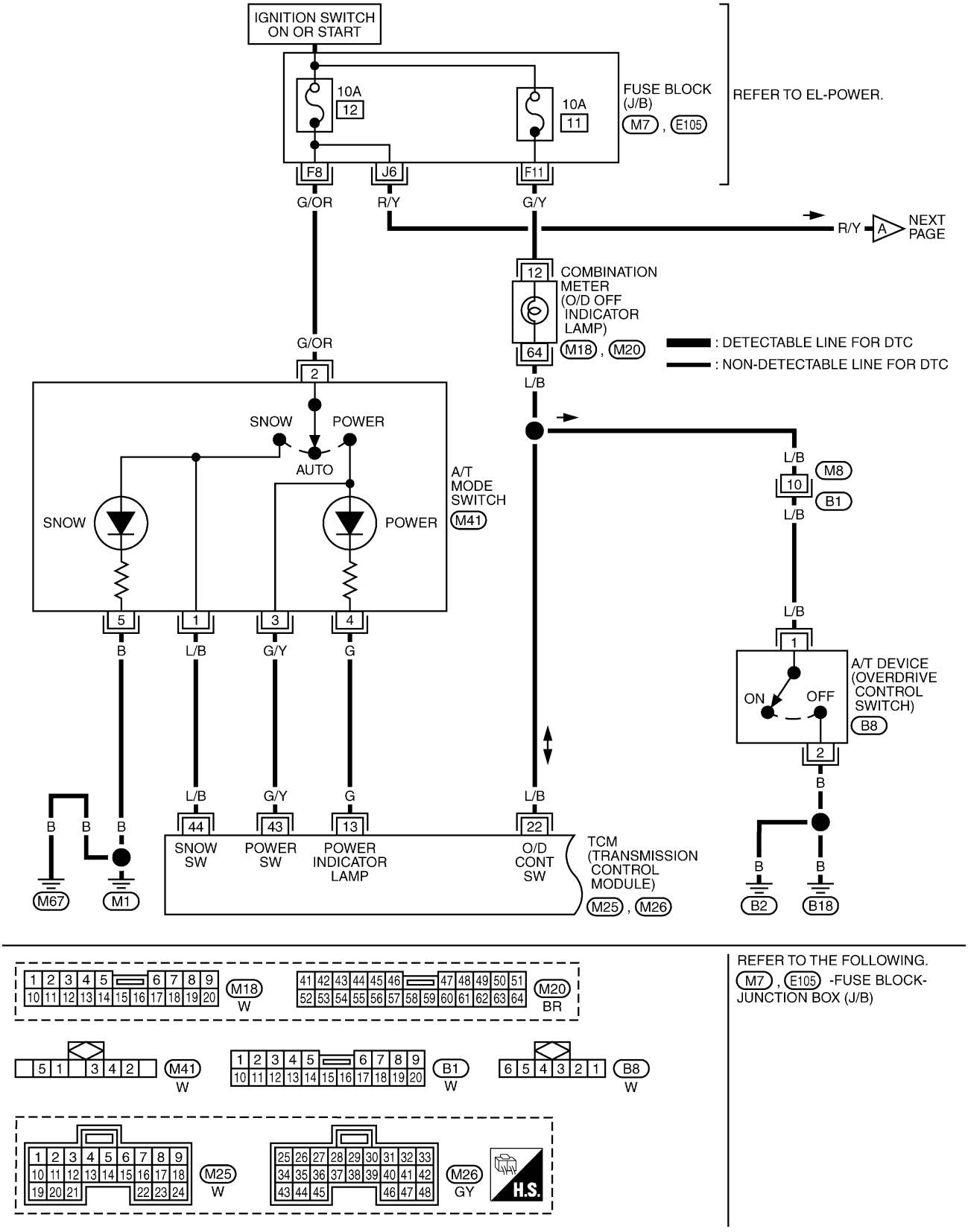

TAT265

AT-NONDTC-02

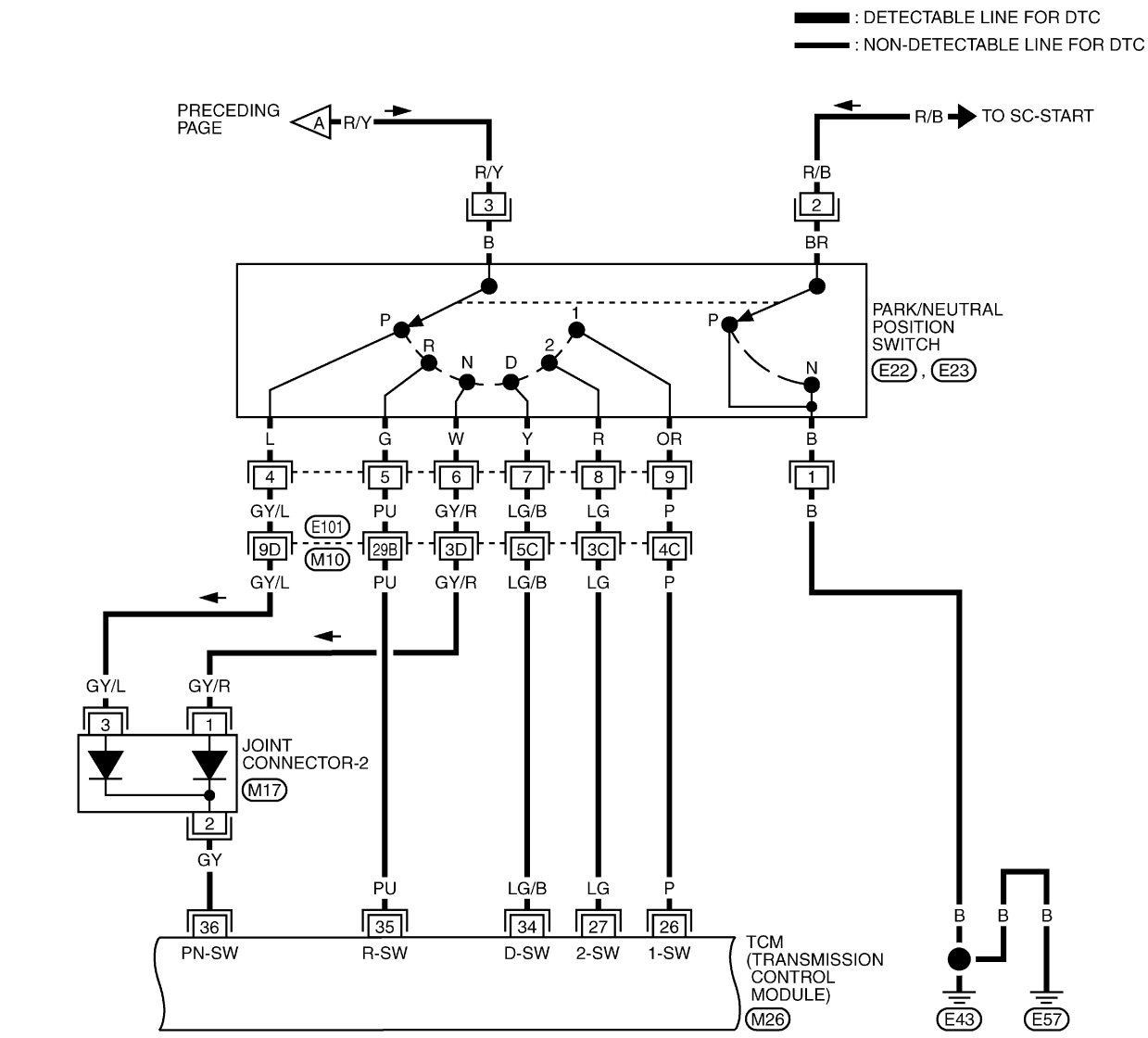

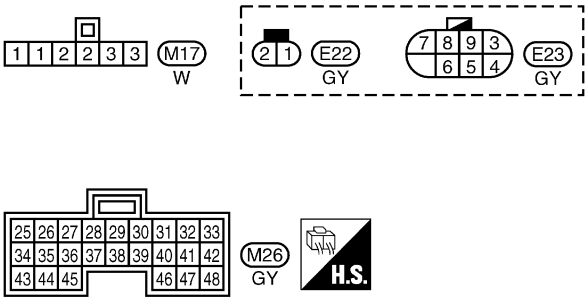

REFER TO THE FOLLOWING.
E101 -SUPER MULTIPLE JUNCTION (SMJ)

TAT266

AT-NONDTC-03

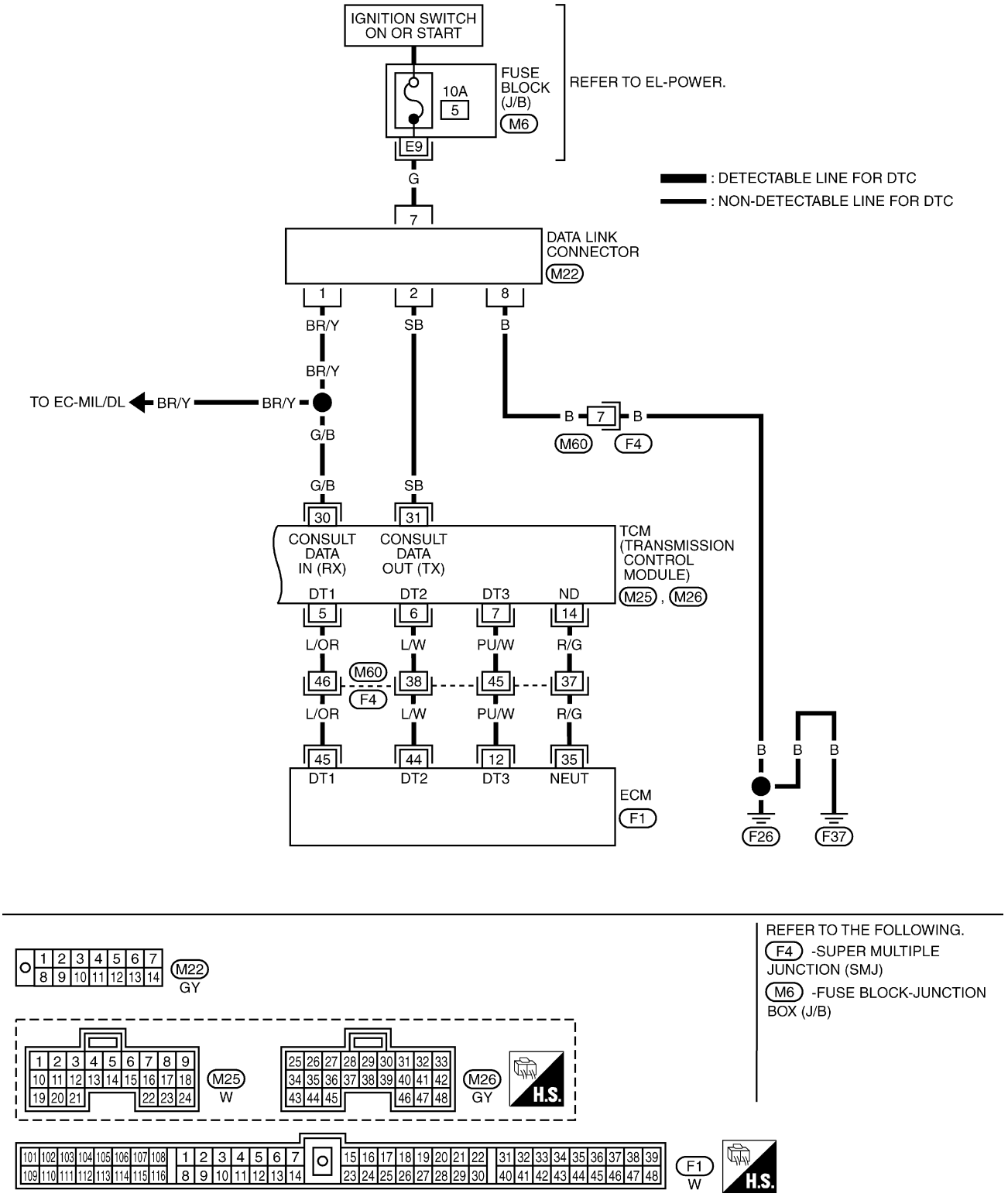

TAT267

1. POWER Indicator Lamp Does Not Come On

NMAT0073

SYMPTOM:

POWER indicator lamp does not come on for about 2 seconds when turning ignition switch to “ON”.

1	CHECK TCM POWER SOURCE STEP 1

1. Turn ignition switch to ON position.
   (Do not start engine.)
2. Check voltage between TCM harness connector M25, M26 terminal Nos. 10 (G/OR), 19 (G/OR), 28 (R/W) and ground.

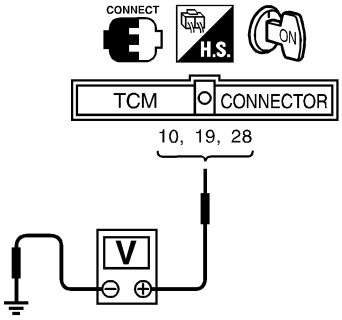

Voltage:
Battery voltage

SAT611J

OK or NG

OK	▶	GO TO 2.
NG	▶	GO TO 3.

2	CHECK TCM POWER SOURCE STEP 2

1. Turn ignition switch to OFF position.
2. Check voltage between TCM harness connector M26 terminal No. 28 (R/W) and ground.

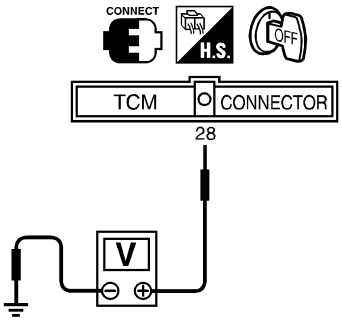

Voltage:
Battery voltage

SAT612JE

OK or NG

OK	▶	GO TO 4.
NG	▶	GO TO 3.

3	DETECT MALFUNCTIONING ITEM

Check the following items:
- Harness for short or open between ignition switch and TCM terminals 10, 19 and 28 (Main harness)
- Ignition switch and 10A fuse [No. 12 or 28, located in the fuse block (J/B)]
  Refer to EL-7, “Schematic”.

OK or NG

OK	▶	GO TO 4.
NG	▶	Repair or replace damaged parts.

4	CHECK TCM GROUND CIRCUIT	
1. Turn ignition switch to OFF position. 2. Disconnect TCM harness connector. 3. Check continuity between TCM terminal Nos. 25, 48 and ground. Refer to "Wiring Diagram — AT — MAIN", AT-86. **Continuity should exist.** If OK, check harness for short to ground and short to power.		
OK or NG		
OK	▶	GO TO 5.
NG	▶	Repair open circuit or short to ground or short to power in harness or connectors.

5	CHECK LAMP CIRCUIT	
1. Turn ignition switch to "ON" position. 2. Set A/T mode switch to "ON" position. 3. Check voltage between TCM harness connector M25 terminal No. 13 (G) and ground.		
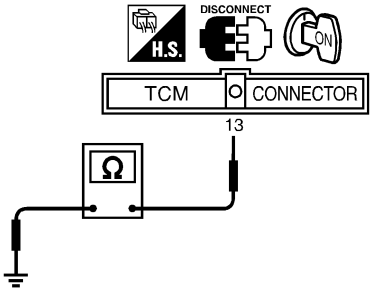 SAT529JA		
Does battery voltage exist?		
Yes	▶	GO TO 6.
No	▶	**Check the following items.** ● Fuse ● POWER indicator lamp Refer to EL-73, "Schematic". ● Harness for short or open between ignition switch and POWER indicator lamp (Main harness) ● Refer to EL-7, "Schematic". ● Harness for short or open between POWER indicator lamp and TCM

6	CHECK SYMPTOM	
Check again.		
OK or NG		
OK	▶	**INSPECTION END**
NG	▶	1. Perform TCM input/output signal inspection. 2. If NG, recheck TCM pin terminals for damage or loose connection with harness connector.

2. POWER or SNOW Indicator Lamp Does Not Come On

NMAT0258

SYMPTOM:
POWER or SNOW indicator lamp does not come on when turning A/T mode switch in the appropriate position.

1	CHECK SYMPTOM	
Is "1. POWER or SNOW Indicator Lamp Come On" OK?		
	Yes or No	
Yes	▶	GO TO 2.
No	▶	Go to 1. POWER Indicator Lamp Come On, AT-149.

2	DETECT MALFUNCTIONING ITEM	
Check the following items: ● A/T mode switch (Refer to AT-189.) ● Harness continuity between ignition switch and A/T mode switch ● Harness continuity between A/T mode switch and TCM ● Ignition switch (Refer to EL-7, "Schematic".)		
	OK or NG	
OK	▶	**INSPECTION END**
NG	▶	Repair or replace damaged parts.

3. O/D OFF Indicator Lamp Does Not Come On

NMAT0259

SYMPTOM:
O/D OFF indicator lamp does not come on when setting overdrive control switch to OFF position.

1	DETECT MALFUNCTIONING ITEM	
Check the following items: ● Overdrive control switch (Refer to AT-189.) ● Harness continuity between ignition switch and O/D OFF indicator lamp ● Ignition switch (Refer to EL-7, "Schematic".)		
	OK or NG	
OK	▶	**INSPECTION END**
NG	▶	Repair or replace damaged parts.

4. POWER Indicator Lamp Does Not Come On

=NMAT0260

SYMPTOM:
POWER indicator lamp does not come on for about 3 seconds when depressing and releasing accelerator pedal fully.

1	CHECK SELF-DIAGNOSTIC RESULTS	
Does self-diagnosis show damage to throttle position sensor circuit?		

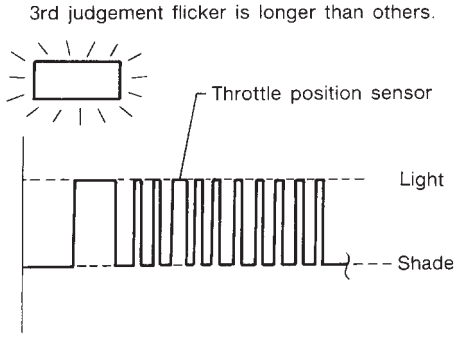

SAT808H

Yes or No

Yes	▶	GO TO 2.
No	▶	Check damaged circuit. Refer to AT-98.

2	CHECK THROTTLE POSITION SENSOR	
Check throttle position sensor. Refer to EC-141, “Component Description”.		

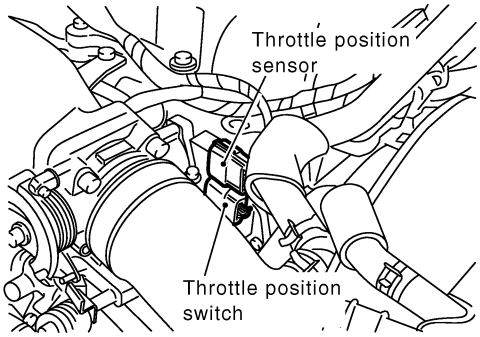

SAT414K

OK or NG

OK	▶	GO TO 3.
NG	▶	Repair or replace damaged parts.

3	CHECK TCM INSPECTION	
1. Perform TCM input/output signal inspection. 2. If NG, recheck TCM pin terminals for damage or loose connection with harness connector.		

OK or NG

OK	▶	**INSPECTION END**
NG	▶	Repair or replace damaged parts.

5. Engine Cannot Be Started In “P” and “N” Position

=NMAT0074

SYMPTOM:

Engine cannot be started with selector lever in “P” or “N” position.

Engine cannot be started with selector lever in “P”Engine can be started with selector lever in “D”, “2”, “1” or “R” position.

1	CHECK PNP SWITCH CIRCUIT	
With CONSULT-II Does “TCM INPUT SIGNALS” in Data Monitor show damage to PNP switch circuit?		
Without CONSULT-II Does self-diagnosis show damage to PNP switch circuit?		
Yes or No		
Yes	▶	Check PNP switch circuit. Refer to AT-189.
No	▶	GO TO 2.

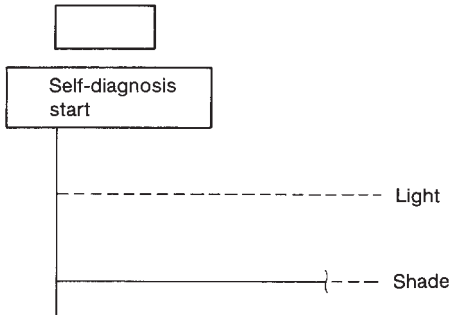

SAT146BA

2	CHECK PNP SWITCH INSPECTION	
Check for short or open of PNP switch 2-pin harness connector E22. Refer to “Components Inspection”, AT-196.		
OK or NG		
OK	▶	GO TO 3.
NG	▶	Repair or replace PNP switch.

3	CHECK STARTING SYSTEM	
Check starting system. Refer to SC-12, “System Description”.		
OK or NG		
OK	▶	**INSPECTION END**
NG	▶	Repair or replace damaged parts.

6. In “P” Position, Vehicle Moves Forward Or Backward When Pushed

=NMAT0075

SYMPTOM:

Vehicle moves when it is pushed forward or backward with selector lever in “P” position.

1	CHECK PARKING COMPONENTS	
Check parking components. Refer to “Parking Pawl Components”, AT-266. 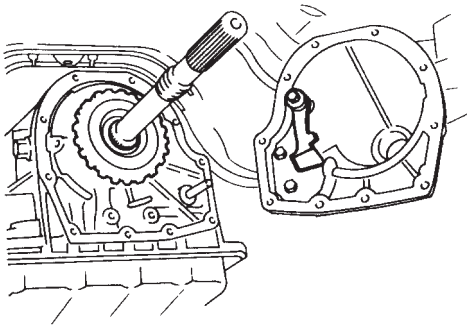 SAT133B		
OK or NG		
OK	▶	**INSPECTION END**
NG	▶	Repair or replace damaged parts.

7. In “N” Position, Vehicle Moves

=NMAT0076

SYMPTOM:

Vehicle moves forward or backward when selecting “N” position.

1	CHECK PNP SWITCH CIRCUIT
With CONSULT-II Does “TCM INPUT SIGNALS” in Data Monitor show damage to PNP switch circuit?	
Without CONSULT-II Does self-diagnosis show damage to PNP switch circuit?	

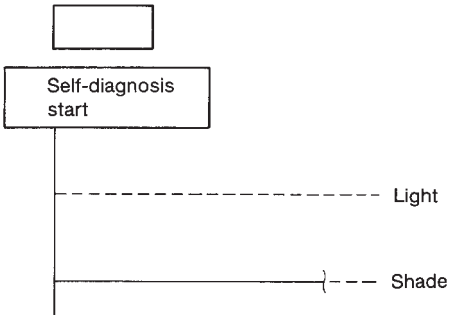

SAT146BA

Yes or No

Yes	▶	Check PNP switch circuit. Refer to AT-189.
No	▶	GO TO 2.

2	CHECK CONTROL LINKAGE
Check control linkage. Refer to AT-207.	

OK or NG

OK	▶	GO TO 3.
NG	▶	Adjust control linkage. Refer to AT-207.

3	CHECK A/T FLUID LEVEL
Check A/T fluid level again. Refer to AT-9.	

SAT638A

OK or NG

OK	▶	GO TO 4.
NG	▶	Refill ATF.

4	CHECK A/T FLUID CONDITION
1. Remove oil pan. 2. Check A/T fluid condition. 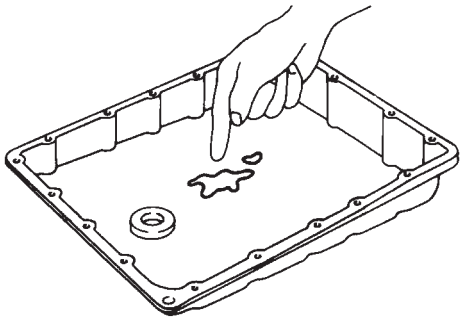 SAT171B	
OK or NG	
OK ▶	GO TO 5.
NG ▶	1. Disassemble A/T. 2. Check the following items: ● Forward clutch assembly ● Overrun clutch assembly ● Reverse clutch assembly

5	CHECK SYMPTOM
Check again.	
OK or NG	
OK ▶	**INSPECTION END**
NG ▶	1. Perform TCM input/output signal inspection. 2. If NG, recheck TCM pin terminals for damage or loose connection with harness connector.

8. Large Shock. “N” → “R” Position

=NMAT0077

SYMPTOM:

There is large shock when changing from “N” to “R” position.

1	CHECK SELF-DIAGNOSTIC RESULTS	
Does self-diagnosis show damage to A/T fluid temperature sensor, line pressure solenoid valve or throttle position sensor circuit?		
Yes or No		
Yes	▶	Check damaged circuit. Refer to AT-98, AT-125 or AT-136.
No	▶	GO TO 2.

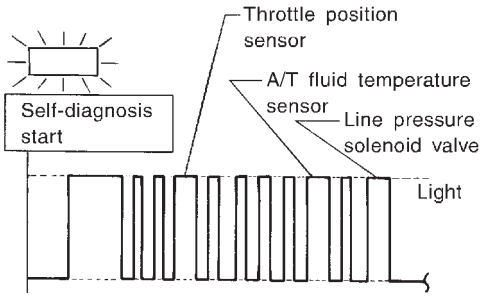

SAT831HA

2	CHECK THROTTLE POSITION SENSOR	
Check throttle position sensor. Refer to EC-141, “Component Description”.		
OK or NG		
OK	▶	GO TO 3.
NG	▶	Repair or replace throttle position sensor.

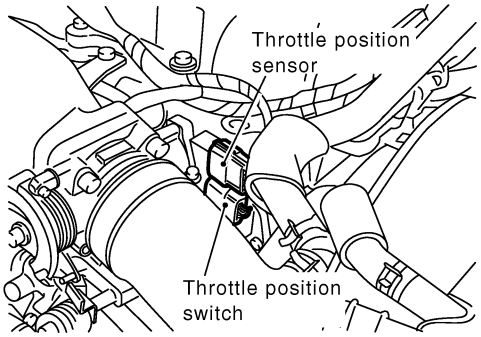

SAT414K

3	CHECK LINE PRESSURE
Check line pressure at idle with selector lever in "D" position. Refer to "LINE PRESSURE TEST", AT-51.	

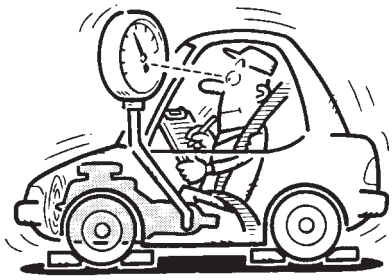

SAT494G

OK or NG

OK	▶	GO TO 4.
NG	▶	1. Remove control valve assembly. Refer to AT-205. 2. Check the following items: ● Valves to control line pressure (Pressure regulator valve, pressure modifier valve, pilot valve and pilot filter) ● Line pressure solenoid valve

4	CHECK SYMPTOM
Check again.	

OK or NG

OK	▶	**INSPECTION END**
NG	▶	1. Perform TCM input/output signal inspection. 2. If NG, recheck TCM pin terminals for damage or loose connection with harness connector.

9. Vehicle Does Not Creep Backward In “R” Position

=NMAT0078

SYMPTOM:

Vehicle does not creep backward when selecting “R” position.

1	CHECK A/T FLUID LEVEL
Check A/T fluid level again. Refer to AT-9.	

SAT638A

OK or NG

OK	▶	GO TO 2.
NG	▶	Refill ATF.

2	CHECK STALL TEST
Check stall revolution with selector lever in “1” and “R” positions. Refer to “STALL TEST”, AT-48.	

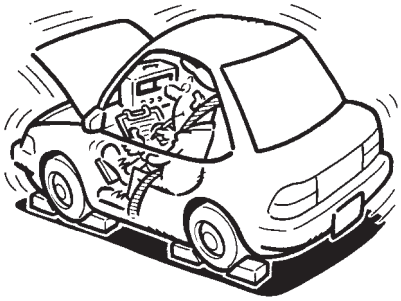

SAT493G

OK or NG

OK	▶	GO TO 3.
OK in “1” position, NG in “R” position	▶	1. Remove control valve assembly. Refer to “ON-VEHICLE SERVICE”, AT-205. 2. Check the following items: ● Valves to control line pressure (Pressure regulator valve, pressure modifier valve, pilot valve and pilot filter) ● Line pressure solenoid valve 3. Disassemble A/T. 4. Check the following items: ● Oil pump assembly ● Torque converter ● Reverse clutch assembly ● High clutch assembly
NG in both “1” and “R” positions	▶	GO TO 6.

3	CHECK LINE PRESSURE

Check line pressure at idle with selector lever in “R” position. Refer to “LINE PRESSURE TEST”, AT-51.

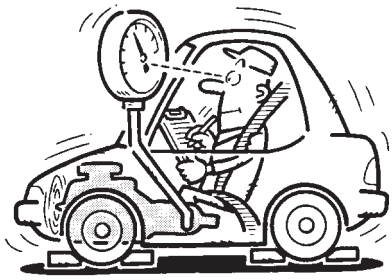

SAT494G

OK or NG

OK	▶	GO TO 4.
NG	▶	1. Remove control valve assembly. Refer to “ON-VEHICLE SERVICE”, AT-205. 2. Check the following items: ● Valves to control line pressure (Pressure regulator valve, pressure modifier valve, pilot valve and pilot filter) ● Line pressure solenoid valve 3. Disassemble A/T. 4. Check the following items: ● Oil pump assembly

4	CHECK A/T FLUID CONDITION

1. Remove oil pan.
2. Check A/T fluid condition.

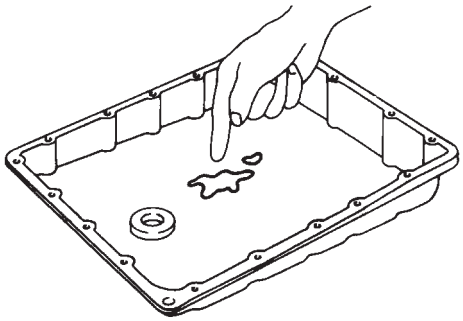

SAT171B

OK or NG

OK	▶	GO TO 5.
NG	▶	GO TO 6.

5	CHECK SYMPTOM

Check again.

OK or NG

OK	▶	**INSPECTION END**
NG	▶	1. Perform TCM input/output signal inspection. 2. If NG, recheck TCM pin terminals for damage or loose connection with harness connector.

6	DETECT MALFUNCTIONING ITEM
1. Remove control valve assembly. Refer to “ON-VEHICLE SERVICE”, AT-205. 2. Check the following items: ● Valves to control line pressure (Pressure regulator valve, pressure modifier valve, pilot valve and pilot filter) ● Line pressure solenoid valve 3. Disassemble A/T. 4. Check the following items: ● Oil pump assembly ● Torque converter ● Reverse clutch assembly ● High clutch assembly ● Low & reverse brake assembly ● Low one-way clutch	
▶	Repair or replace damaged parts.

10. Vehicle Does Not Creep Forward In “D”, “2” Or “1” Position

=NMAT0079

SYMPTOM:

Vehicle does not creep forward when selecting “D”, “2” or “1” position.

1	CHECK A/T FLUID LEVEL	
Check A/T fluid level again. Refer to AT-9.		
	OK or NG	
OK	▶	GO TO 2.
NG	▶	Refill ATF.

SAT638A

2	CHECK STALL TEST	
Check stall revolution with selector lever in “D” position. Refer to “STALL TEST”, AT-48.		
	OK or NG	
OK	▶	GO TO 3.
NG	▶	GO TO 6.

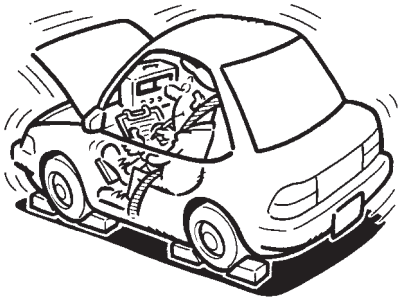

SAT493G

3	CHECK LINE PRESSURE
Check line pressure at idle with selector lever in “R” position. Refer to “LINE PRESSURE TEST”, AT-51. 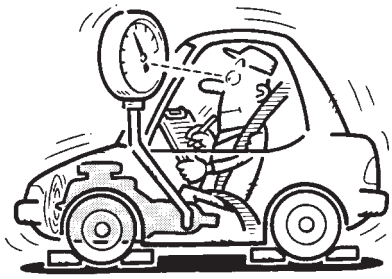 SAT494G	
OK or NG	
OK ▶	GO TO 4.
NG ▶	1. Remove control valve assembly. Refer to AT-205. 2. Check the following items: ● Valves to control line pressure (Pressure regulator valve, pressure modifier valve, pilot valve and pilot filter) ● Line pressure solenoid valve 3. Disassemble A/T. 4. Check the following items: ● Oil pump assembly

4	CHECK A/T FLUID CONDITION
1. Remove oil pan. 2. Check A/T fluid condition. 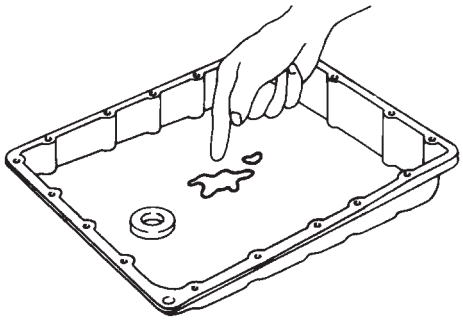 SAT171B	
OK or NG	
OK ▶	GO TO 5.
NG ▶	GO TO 6.

5	CHECK SYMPTOM
Check again.	
OK or NG	
OK ▶	**INSPECTION END**
NG ▶	1. Perform TCM input/output signal inspection. 2. If NG, recheck TCM pin terminals for damage or loose connection with harness connector.

6	DETECT MALFUNCTIONING ITEM
1. Remove control valve assembly. Refer to “ON-VEHICLE SERVICE”, AT-205. 2. Check the following items: ● Valves to control line pressure (Pressure regulator valve, pressure modifier valve, pilot valve and pilot filter) ● Line pressure solenoid valve 3. Disassemble A/T. 4. Check the following items: ● Oil pump assembly ● Forward clutch assembly ● Forward one-way clutch ● Low one-way clutch ● Low & reverse brake assembly ● Torque converter	
▶	Repair or replace damaged parts.

11. Vehicle Cannot Be Started From D_1

=NMAT0080

SYMPTOM:

Vehicle cannot be started from D_1 on Cruise test — Part 1.

1	CHECK SYMPTOM	
Is “6. Vehicle Does Not Creep Backward In “R” Position” OK?		
Yes or No		
Yes	▶	GO TO 2.
No	▶	Go to “9. Vehicle Does Not Creep Backward In “R” Position”, AT-159.

2	CHECK SELF-DIAGNOSTIC RESULTS	
Does self-diagnosis show damage to vehicle speed sensor·A/T (revolution sensor), shift solenoid valve A, B or vehicle speed sensor·MTR after cruise test?		
Yes or No		
Yes	▶	Check damaged circuit. Refer to AT-89, AT-95, AT-106 or AT-111.
No	▶	GO TO 3.

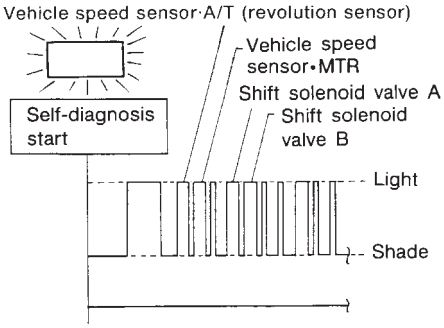

SAT934FB

3	CHECK THROTTLE POSITION SENSOR	
Check throttle position sensor. Refer to EC-141, “Component Description”.		
OK or NG		
OK	▶	GO TO 4.
NG	▶	Repair or replace throttle position sensor.

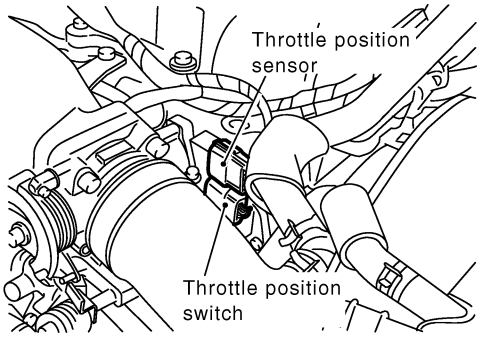

SAT414K

4	CHECK LINE PRESSURE

Check line pressure at stall point with selector lever in "D" position.
Refer to "LINE PRESSURE TEST", AT-51.

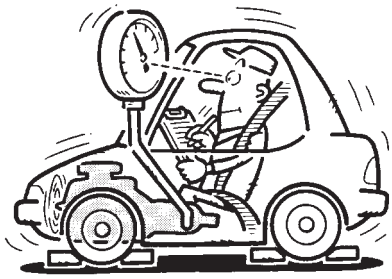

SAT494G

OK or NG

OK	▶	GO TO 5.
NG	▶	GO TO 8.

5	CHECK A/T FLUID CONDITION

1. Remove oil pan.
2. Check A/T fluid condition.

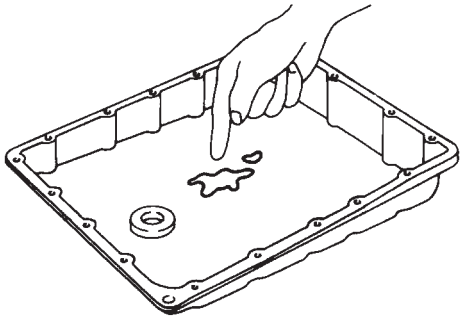

SAT171B

OK or NG

OK	▶	GO TO 6.
NG	▶	GO TO 8.

6	DETECT MALFUNCTIONING ITEM

1. Remove control valve assembly.
   Refer to AT-205.
2. Check the following items:

- Shift valve A
- Shift valve B
- Shift solenoid valve A
- Shift solenoid valve B
- Pilot valve
- Pilot filter

OK or NG

OK	▶	GO TO 7.
NG	▶	Repair or replace damaged parts.

7	CHECK SYMPTOM
Check again.	
OK or NG	
OK ▶	**INSPECTION END**
NG ▶	1. Perform TCM input/output signal inspection. 2. If NG, recheck TCM pin terminals for damage or loose connection with harness connector.

8	DETECT MALFUNCTIONING ITEM
1. Remove control valve assembly. Refer to AT-205. 2. Check the following items: ● Shift valve A ● Shift valve B ● Shift solenoid valve A ● Shift solenoid valve B ● Pilot valve ● Pilot filter 3. Disassemble A/T. 4. Check the following items: ● Forward clutch assembly ● Forward one-way clutch ● Low one-way clutch ● High clutch assembly ● Torque converter ● Oil pump assembly	
OK or NG	
OK ▶	GO TO 7.
NG ▶	Repair or replace damaged parts.

12. A/T Does Not Shift: $D_1 \rightarrow D_2$ Or Does Not Kickdown: $D_4 \rightarrow D_2$

=NMAT0081

SYMPTOM:

A/T does not shift from D_1 to D_2 at the specified speed.
A/T does not shift from D_4 to D_2 when depressing accelerator pedal fully at the specified speed.

1	CHECK SYMPTOM	
Are “7. Vehicle Does Not Creep Forward In “D”, “2” Or “1” Position” and “8. Vehicle Cannot Be Started From D_1” OK?		
Yes or No		
Yes	▶	GO TO 2.
No	▶	Go to “10. Vehicle Does Not Creep Forward In “D”, “2” Or “1” Position” and “11. Vehicle Cannot Be Started From D_1”, AT-162, 165.

2	CHECK PNP SWITCH CIRCUIT	
With CONSULT-II Does “TCM INPUT SIGNALS” in Data Monitor show damage to PNP switch circuit?		
Without CONSULT-II Does self-diagnosis show damage to PNP switch circuit?		
Yes or No		
Yes	▶	Check PNP switch circuit. Refer to AT-189.
No	▶	GO TO 3.

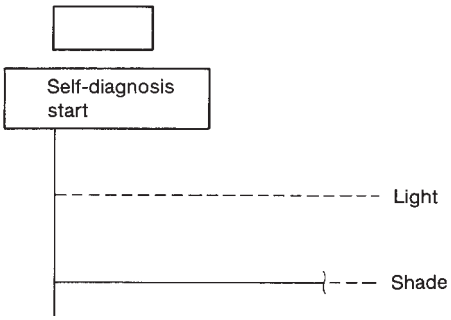

SAT146BA

3	CHECK VEHICLE SPEED SENSOR·A/T AND VEHICLE SPEED SENSOR·MTR CIRCUIT	
Check vehicle speed sensor·A/T (revolution sensor) and vehicle speed sensor·MTR circuit. Refer to AT-89, AT-95.		
OK or NG		
OK	▶	GO TO 4.
NG	▶	Repair or replace vehicle speed sensor·A/T (revolution sensor) and vehicle speed sensor·MTR circuits.

4	CHECK THROTTLE POSITION SENSOR

Check throttle position sensor. Refer to EC-141, "Component Description".

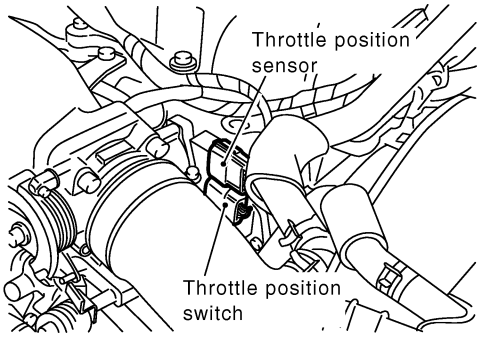

SAT414K

OK or NG

OK	▶	GO TO 5.
NG	▶	Repair or replace throttle position sensor.

5	CHECK A/T FLUID CONDITION

1. Remove oil pan.
2. Check A/T fluid condition.

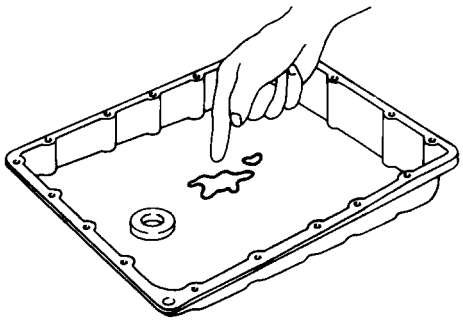

SAT171B

OK or NG

OK	▶	GO TO 6.
NG	▶	GO TO 8.

6	DETECT MALFUNCTIONING ITEM

1. Remove control valve. Refer to AT-205.
2. Check the following items:
- Shift valve A
- Shift solenoid valve A
- Pilot valve
- Pilot filter

OK or NG

OK	▶	GO TO 7.
NG	▶	Repair or replace damaged parts.

7	CHECK SYMPTOM	
Check again.		
	OK or NG	
OK	▶	**INSPECTION END**
NG	▶	1. Perform TCM input/output signal inspection. 2. If NG, recheck TCM pin terminals for damage or loose connection with harness connector.

8	DETECT MALFUNCTIONING ITEM	
1. Remove control valve. Refer to AT-205. 2. Check the following items: ● Shift valve A ● Shift solenoid valve A ● Pilot valve ● Pilot filter 3. Disassemble A/T. 4. Check the following items: ● Servo piston assembly ● Brake band ● Oil pump assembly		
	OK or NG	
OK	▶	GO TO 7.
NG	▶	Repair or replace damaged parts.

13. A/T Does Not Shift: $D_2 \rightarrow D_3$

=NMAT0082

SYMPTOM:

A/T does not shift from D_2 to D_3 at the specified speed.

1	CHECK SYMPTOM	
Are “7. Vehicle Does Not Creep Forward In “D”, “2” Or “1” Position” and “8. Vehicle Cannot Be Started From D_1” OK?		
Yes or No		
Yes	▶	GO TO 2.
No	▶	Go to “10. Vehicle Does Not Creep Forward In “D”, “2” Or “1” Position” and “11. Vehicle Cannot Be Started From D_1”, AT-162, 165.

2	CHECK PNP SWITCH CIRCUIT	
With CONSULT-II Does “TCM INPUT SIGNALS” in Data Monitor show damage to PNP switch circuit?		
Without CONSULT-II Does self-diagnosis show damage to PNP switch circuit?		
Yes or No		
Yes	▶	Check PNP switch circuit. Refer to AT-189.
No	▶	GO TO 3.

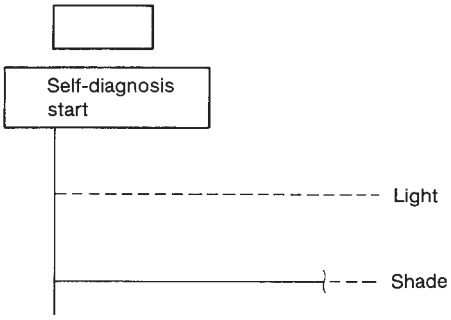

SAT146BA

3	CHECK THROTTLE POSITION SENSOR	
Check throttle position sensor. Refer to EC-141, “Component Description”.		
OK or NG		
OK	▶	GO TO 4.
NG	▶	Repair or replace throttle position sensor.

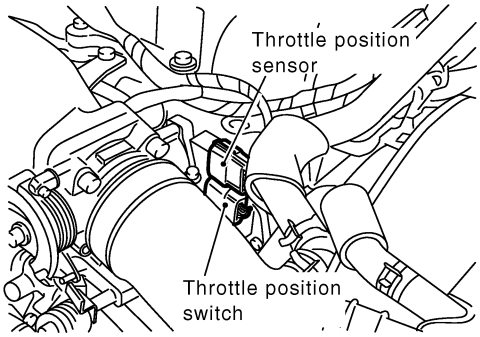

SAT414K

4	CHECK A/T FLUID CONDITION

1. Remove oil pan.
2. Check A/T fluid condition.

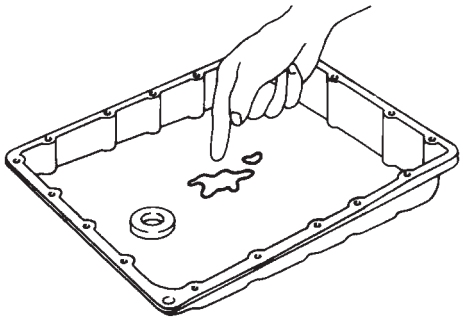

SAT171B

OK or NG

OK	▶	GO TO 5.
NG	▶	GO TO 7.

5	DETECT MALFUNCTIONING ITEM

1. Remove control valve Assembly. Refer to AT-205.
2. Check the following items:
- Shift valve B
- Shift solenoid valve B
- Pilot valve
- Pilot filter

OK or NG

OK	▶	GO TO 6.
NG	▶	Repair or replace damaged parts.

6	CHECK SYMPTOM

Check again.

OK or NG

OK	▶	**INSPECTION END**
NG	▶	1. Perform TCM input/output signal inspection. 2. If NG, recheck TCM pin terminals for damage or loose connection with harness connector.

7	DETECT MALFUNCTIONING ITEM	
1. Remove control valve Assembly. Refer to AT-205. 2. Check the following items: ● Shift valve B ● Shift solenoid valve B ● Pilot valve ● Pilot filter 3. Disassemble A/T. 4. Check the following items: ● Servo piston assembly ● High clutch assembly ● Oil pump assembly		
OK or NG		
OK	▶	GO TO 6.
NG	▶	Repair or replace damaged parts.

14. A/T Does Not Shift: $D_3 \rightarrow D_4$

=NMAT0083

SYMPTOM:

- **A/T does not shift from D_3 to D_4 at the specified speed.**
- **A/T must be warm before D_3 to D_4 shift will occur.**

1	CHECK SYMPTOM	
Are “10. Vehicle Does Not Creep Forward In “D”, “2” Or “1” Position” and “11. Vehicle Cannot Be Started From D_1” OK?		
Yes or No		
Yes	▶	GO TO 2.
No	▶	Go to “10. Vehicle Does Not Creep Forward In “D”, “2” Or “1” Position” and “11. Vehicle Cannot Be Started From D_1”, AT-162, 165.

2	CHECK SELF-DIAGNOSTIC RESULTS	
With CONSULT-II Does self-diagnosis, after cruise test, show damage to any of the following circuits? ● PNP switch ● Overdrive control switch ● A/T fluid temperature sensor ● Revolution sensor ● Shift solenoid valve A or B ● Vehicle speed sensor		
Yes or No		
Yes	▶	Check damaged circuit. Refer to AT-89, AT-95, AT-106, AT-111, AT-125 or 189.
No	▶	GO TO 3.

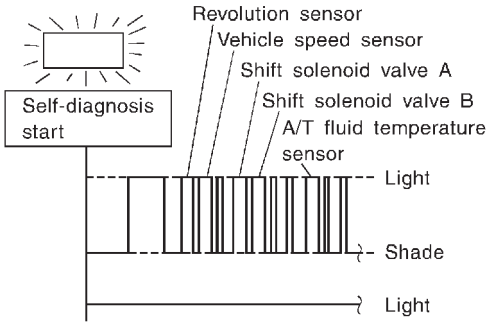

SAT833HA

3	CHECK THROTTLE POSITION SENSOR	
Check throttle position sensor. Refer to EC-141, “Component Description”.		
OK or NG		
OK	▶	GO TO 4.
NG	▶	Repair or replace throttle position sensor.

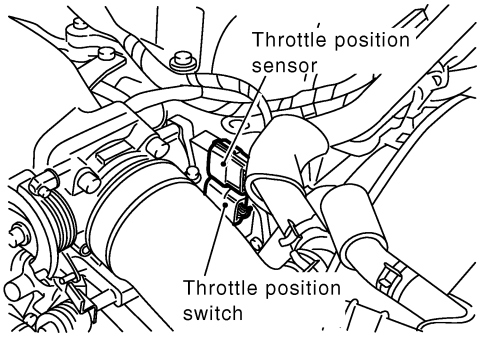

SAT414K

4	CHECK A/T FLUID CONDITION

1. Remove oil pan.
2. Check A/T fluid condition.

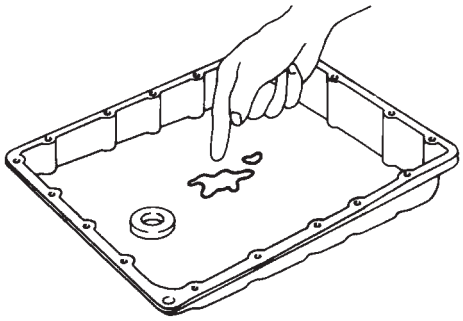

SAT171B

OK or NG

OK	▶	GO TO 5.
NG	▶	GO TO 7.

5	DETECT MALFUNCTIONING ITEM

1. Remove control valve Assembly. Refer to AT-205.
2. Check the following items:
- Shift valve B
- Overrun clutch control valve
- Shift solenoid valve B
- Pilot valve
- Pilot filter

OK or NG

OK	▶	GO TO 6.
NG	▶	Repair or replace damaged parts.

6	CHECK SYMPTOM

Check again.

OK or NG

OK	▶	**INSPECTION END**
NG	▶	1. Perform TCM input/output signal inspection. 2. If NG, recheck TCM pin terminals for damage or loose connection with harness connector.

7	DETECT MALFUNCTIONING ITEM	
1. Remove control valve Assembly. Refer to AT-205. 2. Check the following items: ● Shift valve B ● Overrun clutch control valve ● Shift solenoid valve B ● Pilot valve ● Pilot filter 3. Disassemble A/T. 4. Check the following items: ● Servo piston assembly ● Brake band ● Torque converter ● Oil pump assembly		
	OK or NG	
OK	▶	GO TO 6.
NG	▶	Repair or replace damaged parts.

15. A/T Does Not Perform Lock-up

=NMAT0084

SYMPTOM:

A/T does not perform lock-up at the specified speed.

1	CHECK SELF-DIAGNOSTIC RESULTS

Does self-diagnosis show damage to torque converter clutch solenoid valve circuit after cruise test?

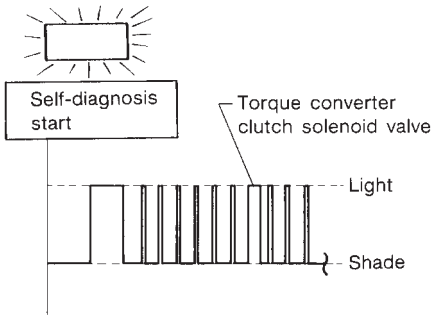

SAT844H

Yes or No

Yes	▶	Check torque converter clutch solenoid valve circuit. Refer to AT-120.
No	▶	GO TO 2.

2	CHECK THROTTLE POSITION SENSOR

Check throttle position sensor. Refer to EC-141, “Component Description”.

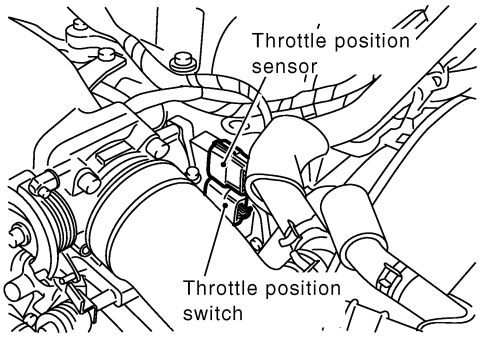

SAT414K

OK or NG

OK	▶	GO TO 3.
NG	▶	Repair or replace throttle position sensor.

3	DETECT MALFUNCTIONING ITEM

1. Remove control valve. Refer to AT-205.
2. Check following items:
- Torque converter clutch control valve
- Torque converter relief valve
- Torque converter clutch solenoid valve
- Pilot valve
- Pilot filter

OK or NG

OK	▶	GO TO 4.
NG	▶	Repair or replace damaged parts.

4	CHECK SYMPTOM	
Check again.		
	OK or NG	
OK	▶	**INSPECTION END**
NG	▶	1. Perform TCM input/output signal inspection. 2. If NG, recheck TCM pin terminals for damage or loose connection with harness connector.

16. A/T Does Not Hold Lock-up Condition

=NMAT0085

SYMPTOM:

A/T does not hold lock-up condition for more than 30 seconds.

1	CHECK DIAGNOSTIC RESULTS	
Does self-diagnosis show damage to engine speed signal circuit after cruise test?		

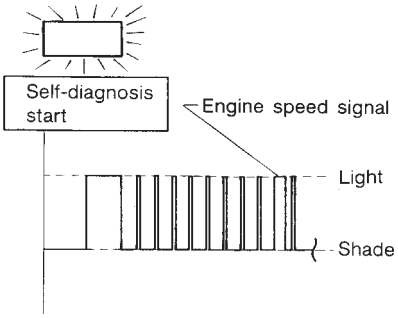

SAT835H

Yes or No

Yes	▶	Check engine speed signal circuit. Refer to AT-132.
No	▶	GO TO 2.

2	CHECK A/T FLUID CONDITION	

1. Remove oil pan.
2. Check A/T fluid condition.

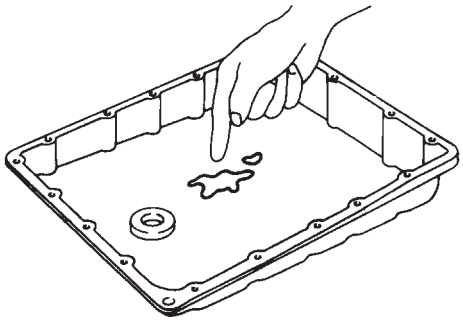

SAT171B

OK or NG

OK	▶	GO TO 3.
NG	▶	GO TO 5.

3	DETECT MALFUNCTIONING ITEM	

1. Remove control valve assembly. Refer to AT-205.
2. Check the following items:
- Torque converter clutch control valve
- Pilot valve
- Pilot filter

OK or NG

OK	▶	GO TO 4.
NG	▶	Repair or replace damaged parts.

4	CHECK SYMPTOM	
Check again.		
	OK or NG	
OK	▶	**INSPECTION END**
NG	▶	1. Perform TCM input/output signal inspection. 2. If NG, recheck TCM pin terminals for damage or loose connection with harness connector.

5	DETECT MALFUNCTIONING ITEM	
1. Remove control valve assembly. Refer to AT-205. 2. Check the following items: ● Torque converter clutch control valve ● Pilot valve ● Pilot filter 3. Disassemble A/T. 4. Check torque converter and oil pump assembly.		
	OK or NG	
OK	▶	GO TO 4.
NG	▶	Repair or replace damaged parts.

17. Lock-up Is Not Released

=NMAT0086

SYMPTOM:

Lock-up is not released when accelerator pedal is released.

1	CHECK THROTTLE POSITION SWITCH CIRCUIT	
With CONSULT-II Does “TCM INPUT SIGNALS” in Data Monitor show damage to closed throttle position switch circuit?		
Without CONSULT-II Does self-diagnosis show damage to closed throttle position switch circuit?		

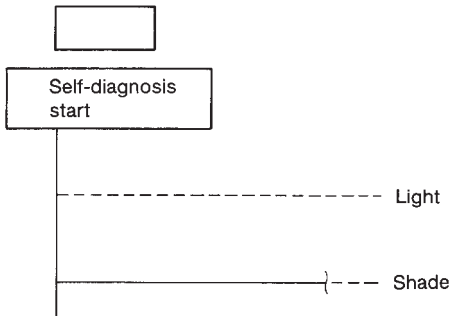

SAT146BA

Yes or No

Yes	▶	Check closed throttle position switch circuit. Refer to AT-189.
No	▶	GO TO 2.

2	CHECK SYMPTOM	
Check again.		
OK or NG		
OK	▶	**INSPECTION END**
NG	▶	1. Perform TCM input/output signal inspection. 2. If NG, recheck TCM pin terminals for damage or loose connection with harness connector.

18. Engine Speed Does Not Return To Idle (Light Braking $D_4 \rightarrow D_3$)

=NMAT0087

SYMPTOM:

- **Engine speed does not smoothly return to idle when A/T shifts from D_4 to D_3.**
- **Vehicle does not decelerate by engine brake when turning overdrive control switch OFF.**
- **Vehicle does not decelerate by engine brake when shifting A/T from “D” to “2” position.**

1	CHECK SELF-DIAGNOSTIC RESULTS	
Does self-diagnosis show damage to overrun clutch solenoid valve circuit after cruise test?		
Yes or No		
Yes	▶	Check overrun clutch solenoid valve circuit. Refer to AT-116.
No	▶	GO TO 2.

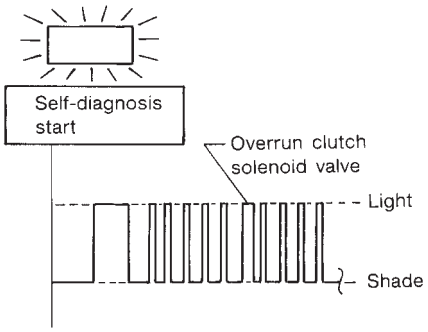

SAT836H

2	CHECK THROTTLE POSITION SENSOR	
Check throttle position sensor. Refer to EC-141, “Component Description”.		
OK or NG		
OK	▶	GO TO 3.
NG	▶	Repair or replace throttle position sensor.

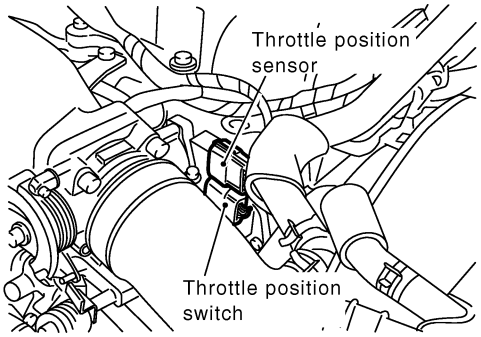

SAT414K

3	CHECK A/T FLUID CONDITION

1. Remove oil pan.
2. Check A/T fluid condition.

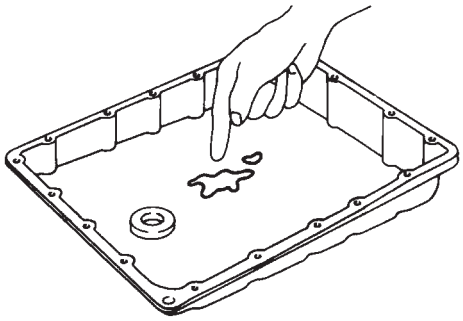

SAT171B

OK or NG

OK	▶	GO TO 4.
NG	▶	GO TO 6.

4	DETECT MALFUNCTIONING ITEM

1. Remove control valve assembly. Refer to AT-205.
2. Check the following items:
- Overrun clutch control valve
- Overrun clutch reducing valve
- Overrun clutch solenoid valve

OK or NG

OK	▶	GO TO 5.
NG	▶	Repair or replace damaged parts.

5	CHECK SYMPTOM

Check again.

OK or NG

OK	▶	**INSPECTION END**
NG	▶	1. Perform TCM input/output signal inspection. 2. If NG, recheck TCM pin terminals for damage or loose connection with harness connector.

6	DETECT MALFUNCTIONING ITEM

1. Remove control valve assembly. Refer to AT-205.
2. Check the following items:
- Overrun clutch control valve
- Overrun clutch reducing valve
- Overrun clutch solenoid valve
3. Disassemble A/T.
4. Check the following items:
- Overrun clutch assembly
- Oil pump assembly

OK or NG

OK	▶	GO TO 5.
NG	▶	Repair or replace damaged parts.

19. Vehicle Does Not Start From D_1

=NMAT0088

SYMPTOM:

Vehicle does not start from D_1 on Cruise test — Part 2.

1	CHECK SELF-DIAGNOSTIC RESULTS	
Does self-diagnosis show damage to vehicle speed sensor·A/T (revolution sensor), shift solenoid valve A, B or vehicle speed sensor·MTR after cruise test?		
Yes or No		
Yes	▶	Check damaged circuit. Refer to AT-89, AT-95, AT-106 or AT-111.
No	▶	GO TO 2.

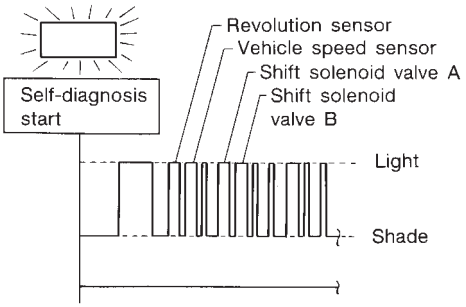

SAT832H

2	CHECK SYMPTOM	
Check again.		
OK or NG		
OK	▶	Go to “11. Vehicle Cannot Be Started From D_1”, AT-165.
NG	▶	1. Perform TCM input/output signal inspection. 2. If NG, recheck TCM pin terminals for damage or loose connection with harness connector.

20. A/T Does Not Shift: $D_4 \rightarrow D_3$, When Overdrive Control Switch "ON" → "OFF"

=NMAT0089

SYMPTOM:

A/T does not shift from D_4 to D_3 when changing overdrive control switch to "OFF" position.

1	CHECK OVERDRIVE CONTROL SWITCH CIRCUIT
With CONSULT-II Does "TCM INPUT SIGNALS" in Data Monitor show damage to overdrive control switch circuit?	
Without CONSULT-II Does self-diagnosis show damage to overdrive control switch circuit?	

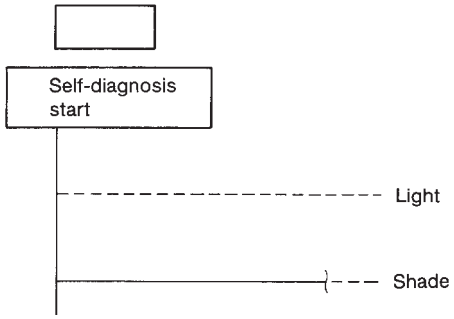

SAT146BA

Yes or No

Yes	▶	Check overdrive control switch circuit. Refer to AT-189.
No	▶	Go to "13. A/T Does Not Shift: $D_2 \rightarrow D_3$", AT-171.

21. A/T Does Not Shift: $D_3 \rightarrow 2_2$, When Selector Lever "D" $\rightarrow$ "2" Position

=NMAT0090

SYMPTOM:

A/T does not shift from D_3 to 2_2 when changing selector lever from "D" to "2" position.

1	CHECK PNP SWITCH CIRCUIT
With CONSULT-II Does "TCM INPUT SIGNALS" in Data Monitor show damage to PNP switch circuit?	
Without CONSULT-II Does self-diagnosis show damage to PNP switch circuit?	

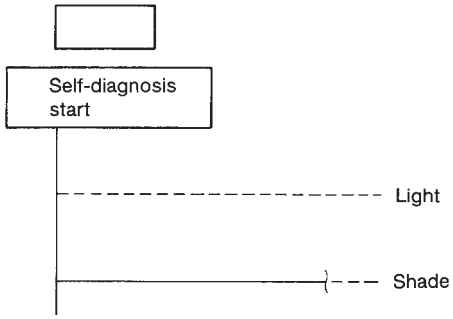

SAT146BA

Yes or No

Yes	▶	Check PNP switch circuit. Refer to AT-189.
No	▶	Go to "12. A/T Does Not Shift: $D_1 \rightarrow D_2$ Or Does Not Kickdown: $D_4 \rightarrow D_2$", AT-168.

22. A/T Does Not Shift: $2_2 \rightarrow 1_1$, When Selector Lever "2" → "1" Position

=NMAT0091

SYMPTOM:

A/T does not shift from 2_2 to 1_1 when changing selector lever from "2" to "1" position.

1	CHECK PNP SWITCH CIRCUIT
With CONSULT-II Does "TCM INPUT SIGNALS" in Data Monitor show damage to PNP switch circuit?	
Without CONSULT-II Does self-diagnosis show damage to PNP switch circuit? 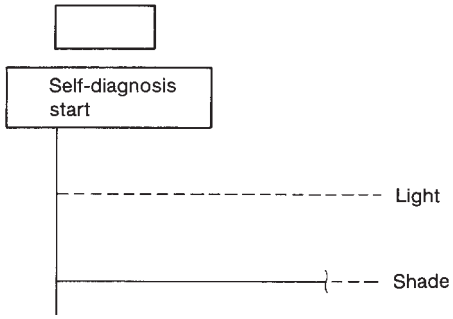 SAT146BA	
Yes or No	
Yes ▶	Check PNP switch circuit. Refer to AT-189.
No ▶	GO TO 2.

2	CHECK SYMPTOM
Check again. 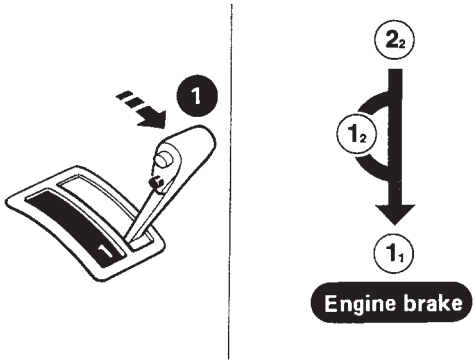 SAT778B	
OK or NG	
OK ▶	**INSPECTION END**
NG ▶	1. Perform TCM input/output signal inspection. 2. If NG, recheck TCM pin terminals for damage or loose connection with harness connector.

23. Vehicle Does Not Decelerate By Engine Brake

=NMAT0092

SYMPTOM:

Vehicle does not decelerate by engine brake when shifting from 2_2 (1_2) to 1_1.

1	CHECK SYMPTOM	
Is “6. Vehicle Does Not Creep Backward In “R” Position” OK?		
	Yes or No	
Yes	▶	Go to “18. Engine Speed Does Not Return To Idle (Light Braking $D_4 \rightarrow D_3$)”, AT-182.
No	▶	Go to “9. Vehicle Does Not Creep Backward In “R” Position”, AT-159.

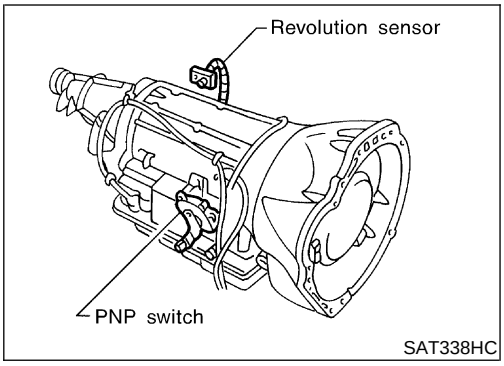

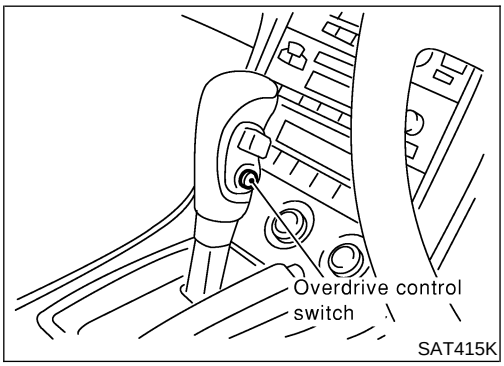

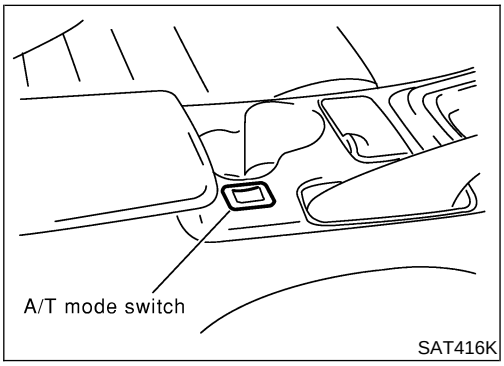

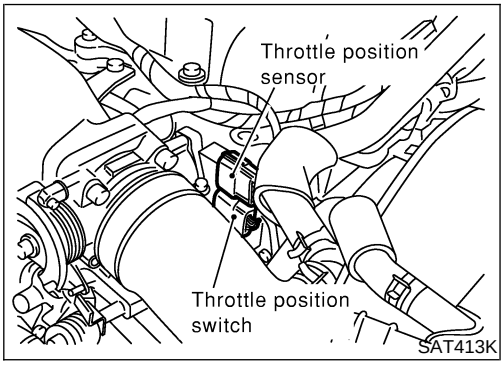

24. TCM Self-diagnosis Does Not Activate (PNP, Overdrive Control, A/T Check and TP Switches Circuit Checks)

NMAT0204

DESCRIPTION

NMAT0204S01

- PNP switch
  The PNP switch assemble includes a transmission range switch. The transmission range switch detects the selector position and sends a signal to the TCM.
- Overdrive control and A/T mode switch
  Detects the switch position (ON or OFF) and sends a signal to the TCM.
- Throttle position switch
  Consists of a wide open throttle position switch and a closed throttle position switch.
  The wide open throttle position switch sends a signal to the TCM when the throttle valve is open at least 1/2 of the full throttle position. The closed throttle position switch sends a signal to the TCM when the throttle valve is fully closed.

DIAGNOSTIC PROCEDURE

=NMAT0204S03

NOTE:
The diagnostic procedure includes inspections for the overdrive control and throttle position switch circuits.

1	CHECK PNP SWITCH CIRCUIT (With CONSULT-II)

With CONSULT-II

1. Turn ignition switch to "ON" position.
   (Do not start engine.)
2. Select "TCM INPUT SIGNALS" in "DATA MONITOR" mode for "A/T" with CONSULT-II.
3. Read out "P", "R", "N", "D", "2" and "1" position switches moving selector lever to each position. Check the signal of the selector lever position is indicated properly.

DATA MONITOR	
MONITORING	
PN POSI SW	OFF
R POSITION SW	OFF
D POSITION SW	OFF
2 POSITION SW	ON
1 POSITION SW	OFF

SAT643J

OK or NG

OK	▶	GO TO 3.
NG	▶	**Check the following items:** ● PNP switch Refer to "Component Inspection", AT-196. ● Harness for short or open between ignition switch and PNP switch (Main harness) ● Harness for short or open between PNP switch and TCM (Main harness) ● Joint connector-2

2 CHECK PNP SWITCH CIRCUIT (Without CONSULT-II)

Without CONSULT-II

1. Turn ignition switch to "ON" position.
   (Do not start engine.)
2. Check voltage between TCM harness connector M26 terminals No. 26 (P), 27 (LG), 34 (LG/B), 35 (PU), 36 (GY) and ground while moving selector lever through each position.

Lever position	Terminals				
	36	35	34	27	26
P, N	**B**	0	0	0	0
R	0	**B**	0	0	0
D	0	0	**B**	0	0
2	0	0	0	**B**	0
1	0	0	0	0	**B**

MTBL0205

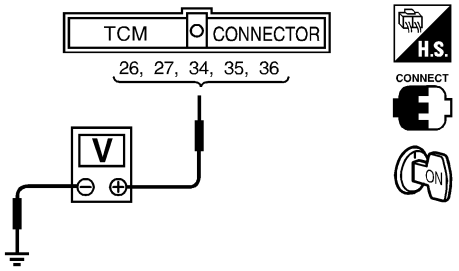

SAT517J

Does battery voltage exist (B) or non-existent (0)?

Yes ▶	GO TO 3.
No ▶	**Check the following items:** ● PNP switch Refer to "Component Inspection", AT-196. ● Harness for short or open between ignition switch and PNP switch (Main harness) ● Harness for short or open between PNP switch and TCM (Main harness) ● Joint connector-2

3	CHECK OVERDRIVE CONTROL SWITCH CIRCUIT

With CONSULT-II

1. Turn ignition switch to "ON" position.
   (Do not start engine.)
2. Select "TCM INPUT SIGNALS" in "DATA MONITOR" mode for "A/T" with CONSULT-II.
3. Read out "OVERDRIVE SWITCH". Check the signal of the overdrive control switch is indicated properly.
   (Overdrive control switch "ON" displayed on CONSULT-II means overdrive "OFF".)

DATA MONITOR	
MONITORING	
ENGINE SPEED	XXX rpm
TURBINE REV	XXX rpm
OVERDRIVE SW	ON
PN POSI SW	OFF
R POSITION SW	OFF

SAT645J

Without CONSULT-II

1. Turn ignition switch to "ON" position.
   (Do not start engine.)
2. Check voltage between TCM harness connector M25 terminal No. 22 (L/B) and ground when overdrive control switch is "ON" and "OFF".
   Voltage:
   Switch position "ON":
   Battery voltage
   Switch position "OFF":
   1V or less

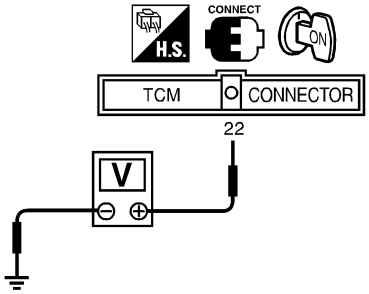

SAT531JB

OK or NG

OK (With CONSULT-II)	▶	GO TO 4.
OK (Without CONSULT-II)	▶	GO TO 5.
NG	▶	**Check the following items:** ● Overdrive control switch Refer to "Component Inspection", AT-196. ● Harness for short or open between TCM and overdrive control switch (Main harness) ● Harness for short or open of ground circuit for overdrive control switch (Main harness)

4	CHECK A/T MODE SWITCH CIRCUIT (With CONSULT-II)

With CONSULT-II

1. Turn ignition switch to "ON" position.
   (Do not start engine.)
2. Select "TCM INPUT SIGNALS".
3. Read out "POWER SHIFT SW". Make sure the selector lever switch position is indicated properly.

DATA MONITOR	
MONITORING	
POWER SHIFT SW	OFF
CLOSED THL/SW	OFF
W/O THRL/P-SW	OFF
HOLD SW	OFF
BRAKE SW	ON

SAT417K

OK or NG

OK (With CONSULT-II)	▶	GO TO 7.
OK (Without CONSULT-II)	▶	GO TO 8.
NG	▶	GO TO 6.

5	CHECK A/T MODE SWITCH CIRCUIT (Without CONSULT-II)

Without CONSULT-II

1. Turn ignition switch to "ON" position.
   (Do not start engine.)
2. Check voltage between TCM harness connector M26 terminal Nos. 43 (GY), 44 (L/B) and ground when A/T mode switch is "ON" and "OFF".

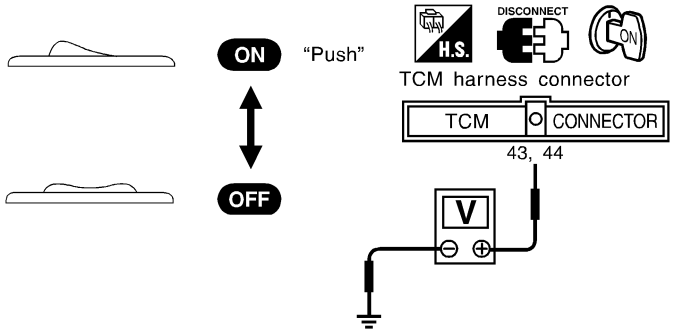

Switch position	Voltage
ON (POWER or SNOW)	Battery voltage
OFF	1V or less

SAT120KA

OK or NG

OK (With CONSULT-II)	▶	GO TO 7.
OK (Without CONSULT-II)	▶	GO TO 8.
NG	▶	GO TO 6.

6 DETECT MALFUNCTIONING ITEM

Check the following items:
- A/T mode switch

a. Check continuity between two terminals.

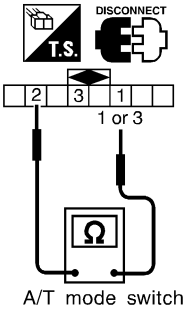

Switch position	Continuity
ON (POWER or SNOW)	Yes
Other positions	No

SAT121KA

- Harness for short or open between TCM and A/T mode switch (Main harness)
- Harness of ground circuit for A/T mode switch (Main harness) for short or open

OK or NG

OK (With CONSULT-II)	▶	GO TO 7.
OK (Without CONSULT-II)	▶	GO TO 8.
NG	▶	Repair or replace damaged parts.

7 CHECK THROTTLE POSITION SWITCH CIRCUIT (With CONSULT-II)

With CONSULT-II

1. Turn ignition switch to "ON" position.
   (Do not start engine.)
2. Select "TCM INPUT SIGNALS" in "DATA MONITOR" mode for "A/T" with CONSULT-II.
3. Read out "CLOSED THL/SW" and "W/O THRL/P-SW" depressing and releasing accelerator pedal.
   Check the signal of throttle position switch is indicated properly.

Accelerator pedal condition	Data monitor	
	CLOSED THL/SW	W/O THRL/P-SW
Released	ON	OFF
Fully depressed	OFF	ON

MTBL0011

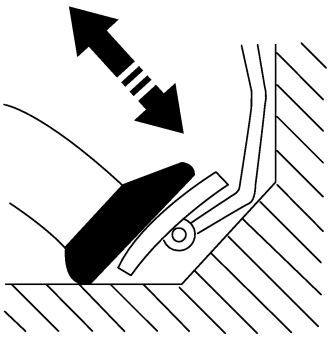

DATA MONITOR	
MONITORING	
POWERSHIFT SW	OFF
CLOSED THL/SW	OFF
W/O THRL/P-SW	OFF
HOLD SW	OFF
BRAKE SW	ON

SAT646J

OK or NG

OK	▶	GO TO 9.
NG	▶	**Check the following items:** • Throttle position switch Refer to "Component Inspection", AT-197. • Harness for short or open between ignition switch and throttle position switch (Main harness) • Harness for short or open between throttle position switch and TCM (Main harness)

8	CHECK THROTTLE POSITION SWITCH CIRCUIT (Without CONSULT-II)

Without CONSULT-II

1. Turn ignition switch to "ON" position.
   (Do not start engine.)
2. Check voltage between TCM harness connector M25 terminals No. 16 (LG), 17 (R) and ground while depressing, and releasing accelerator pedal slowly. (after warming up engine)

Accelerator pedal condition	Voltage	
	Terminal No. 16	Terminal No. 17
Released	Battery voltage	0V
Fully depressed	0V	Battery voltage

MTBL0637

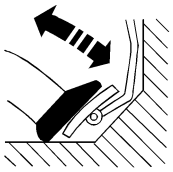

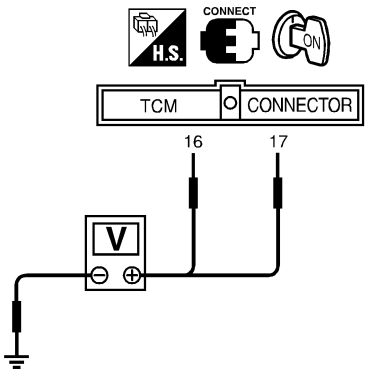

SAT526JC

OK or NG

OK	▶	GO TO 9.
NG	▶	**Check the following items:** ● Throttle position switch Refer to "Component Inspection", AT-197. ● Harness for short or open between ignition switch and throttle position switch (Main harness) ● Harness for short or open between throttle position switch and TCM (Main harness)

9	CHECK DTC

Perform Diagnostic procedure, AT-190.

OK or NG

OK	▶	**INSPECTION END**
NG	▶	1. Perform TCM input/output signal inspection. 2. If NG, recheck TCM pin terminals for damage or loose connection with harness connector.

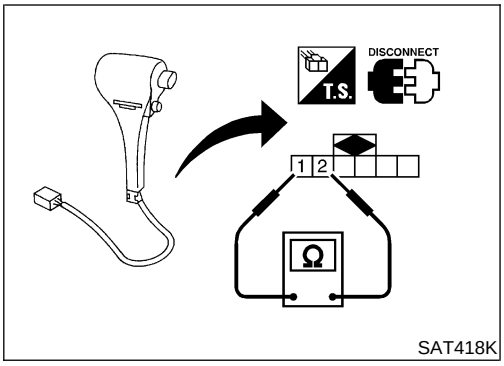

SAT418K

COMPONENT INSPECTION

NMAT0204S04

Overdrive Control Switch

NMAT0204S0401

- Check continuity.

Terminal				
Connector	Switch position	Terminal No. (Wire color)		Continuity
B8	OD "ON"	1 (L/B)	2 (B)	No
	OD "OFF"			Yes

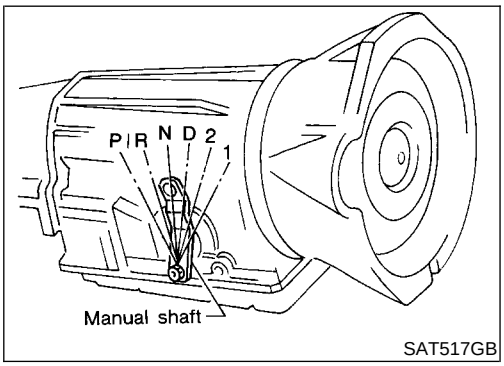

SAT517GB

Park/Neutral Position Switch

NMAT0204S0402

1. Check continuity.

Terminal				
Connector	Select lever position	Terminal No. (Wire color)		Continuity
E22	P, N	1 (B)	2 (BR)	Yes
E23	P	3 (B)	4 (L)	
	R	3 (B)	5 (G)	
	N	3 (B)	6 (W)	
	D	3 (B)	7 (Y)	
	2	3 (B)	8 (R)	
	1	3 (B)	9 (OR)	

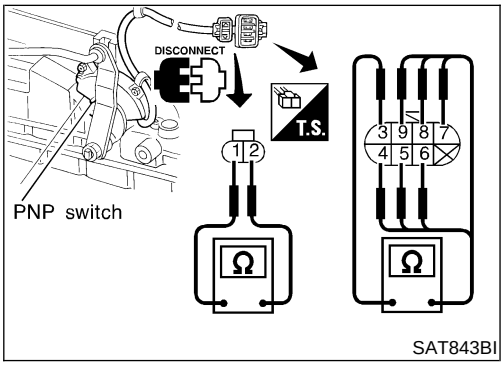

SAT843BI

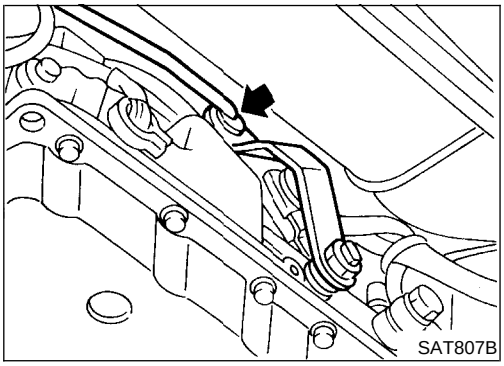
SAT807B

2. If NG, check again with manual control linkage disconnected from manual shaft of A/T assembly. Refer to step 1.
3. If OK on step 2, adjust manual control linkage. Refer to AT-207.

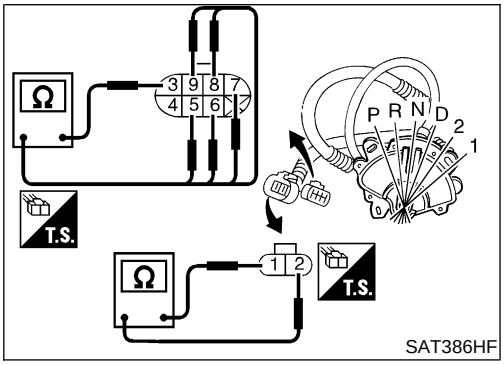

SAT386HF

4. If NG on step 2, remove PNP switch from A/T and check continuity of PNP switch terminals. Refer to step 1.
5. If OK on step 4, adjust PNP switch. Refer to AT-206.
6. If NG on step 4, replace PNP switch.

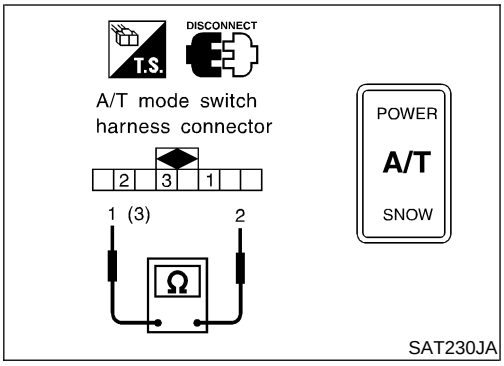

A/T Mode Switch

NMAT0204S0406

- Check continuity.

Terminal					
Connector	Switch position		Terminal No. (Wire color)		Continuity
M41	POWER	ON	2	3	Yes
		OFF			No
	SNOW	ON	1	2	Yes
		OFF			No

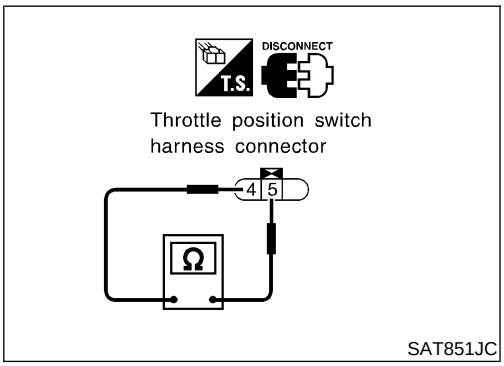

Throttle Position Switch

NMAT0204S0403

Closed Throttle Position Switch (Idle Position)

- Check continuity.

Terminals				
Connector	Accelerator pedal condition	Terminal No. (Wire color)		Continuity
F34	Released	4 (LG)	5 (G/OR)	Yes
	Depressed			No

- To adjust closed throttle position switch, refer to EC-50, "Basic Inspection".

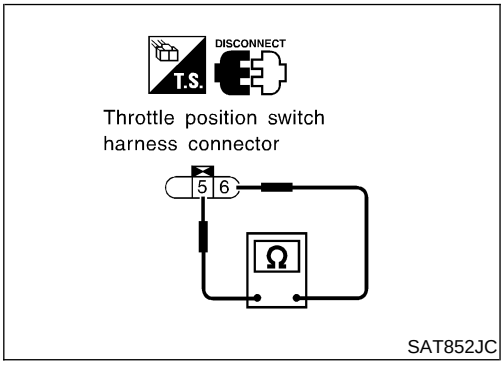

Wide Open Throttle Position Switch

- Check continuity.

Terminals				
Connector	Accelerator pedal condition	Terminal No. (Wire color)		Continuity
F34	Released	5 (G/OR)	6 (R)	No
	Depressed			Yes

Description

NMAT0093

- The mechanical key interlock mechanism also operates as a shift lock:
  With the key switch turned to “ON”, the selector lever cannot be shifted from “P” (parking) to any other position unless the brake pedal is depressed.
  With the key removed, the selector lever cannot be shifted from “P” to any other position.
  The key cannot be removed unless the selector lever is placed in “P”.
- The shift lock and key interlock mechanisms are controlled by the ON-OFF operation of the shift lock solenoid and by the operation of the rotator and slider located inside the key cylinder, respectively.

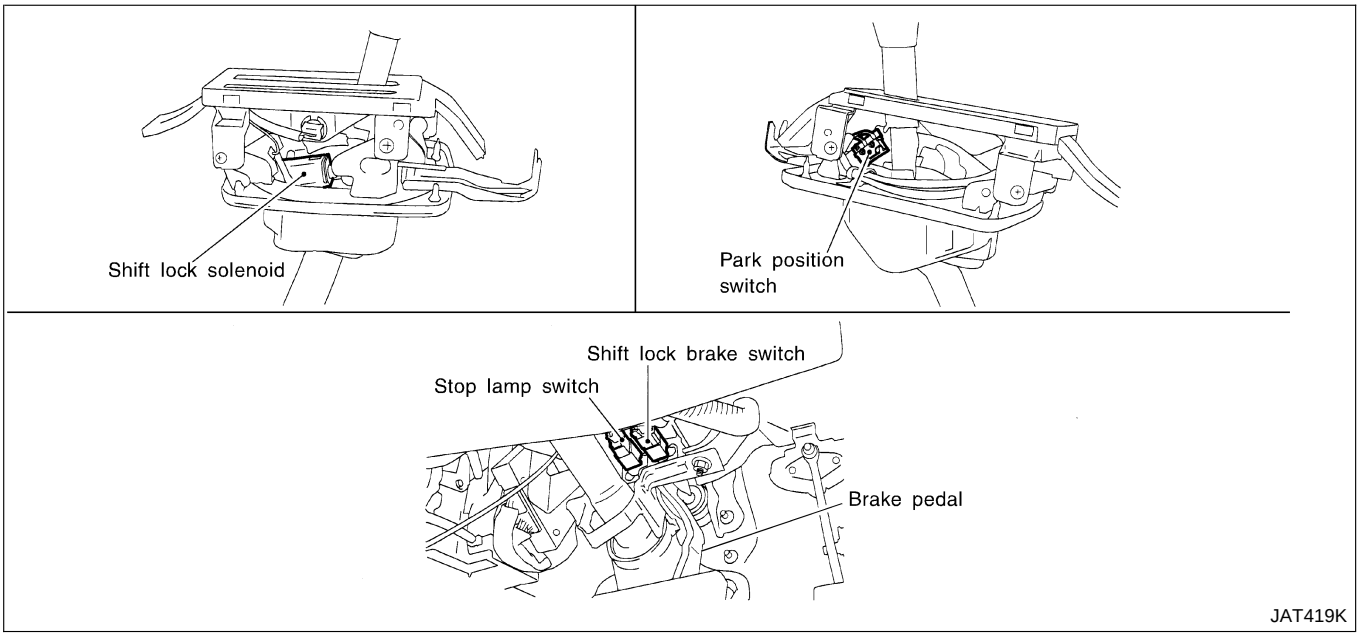

Wiring Diagram — SHIFT —

NMAT0094

AT-SHIFT-01

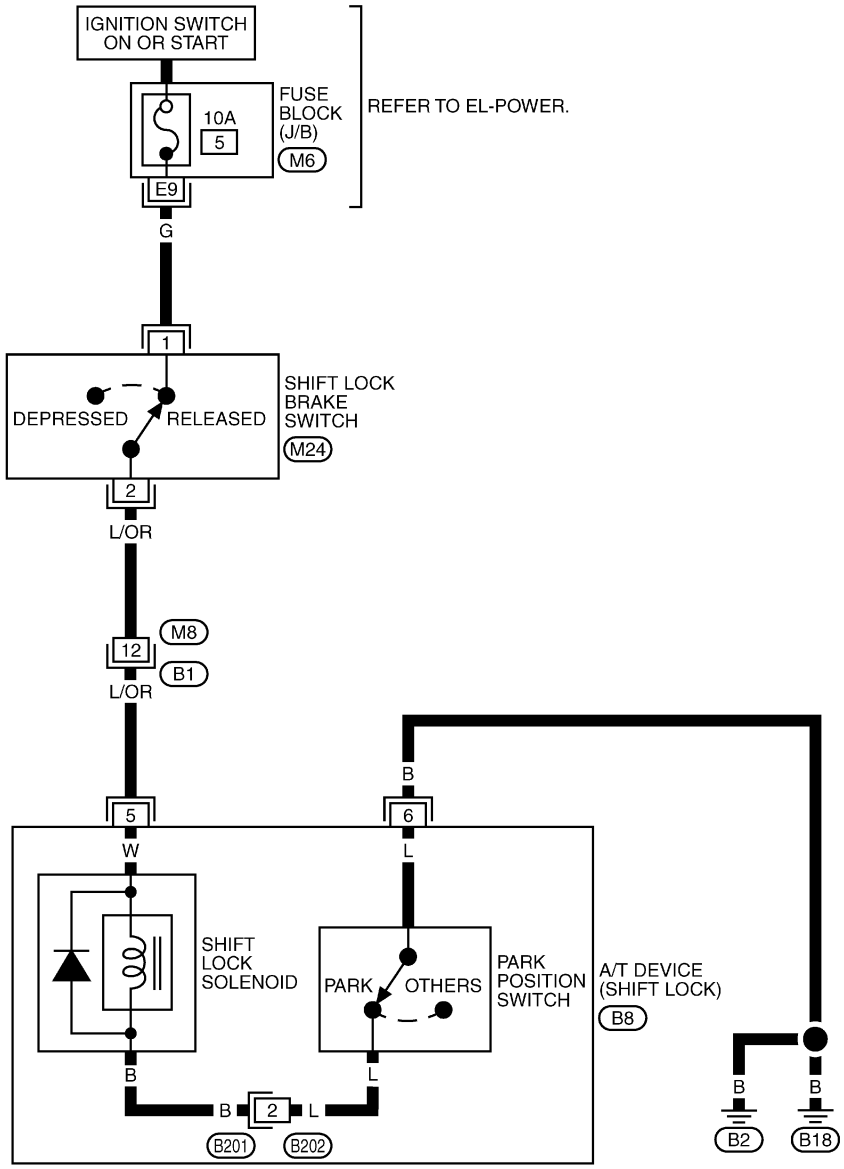

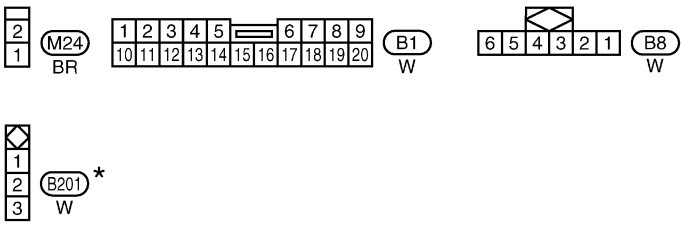

*: THIS CONNECTOR IS NOT SHOWN IN "HARNESS LAYOUT", EL SECTION.

REFER TO THE FOLLOWING.
M6 -FUSE BLOCK-JUNCTION BOX (J/B)

TAT268

Diagnostic Procedure

NMAT0095

SYMPTOM 1:

- **Selector lever cannot be moved from “P” position with key in “ON” position and brake pedal applied.**
- **Selector lever can be moved from “P” position with key in “ON” position and brake pedal released.**
- **Selector lever can be moved from “P” position when key is removed from key cylinder.**

SYMPTOM 2:

Ignition key cannot be removed when selector lever is set to “P” position. It can be removed when selector lever is set to any position except “P”.

1	CHECK KEY INTERLOCK CABLE	
Check key interlock cable for damage.		
	OK or NG	
OK	▶	GO TO 2.
NG	▶	Repair key interlock cable. Refer to “Key Interlock Cable”, AT-203.

2	CHECK SELECTOR LEVER POSITION	
Check selector lever position for damage.		
	OK or NG	
OK	▶	GO TO 3.
NG	▶	Check selector lever. Refer to “ON-VEHICLE SERVICE — PNP Switch and Manual Control Linkage Adjustment”, AT-206 and AT-207.

3	CHECK POWER SOURCE	
1. Turn ignition switch to “ON” position. (Do not start engine.) 2. Check voltage between shift lock brake switch harness connector M24 terminal No. 1 (G) and ground.		
	Does battery voltage exist?	
Yes	▶	GO TO 4.
No	▶	**Check the following items:** ● Harness for short or open between battery and shift lock brake switch harness terminal 1 ● Fuse ● Ignition switch (Refer to EL-7, “Schematic”.)

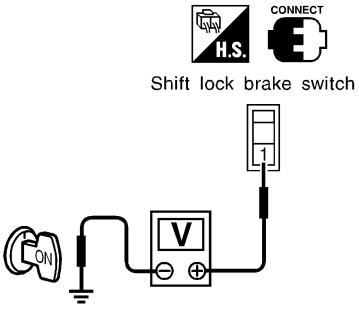

SAT420K

4	CHECK INPUT SIGNAL (BRAKE SWITCH)

Turn ignition switch to "ON" position.
(Do not start engine.)

- Check voltage between A/T device harness connector B8 terminal No. 5 (L/OR) and ground.

Voltage:
Brake pedal depressed:
0V
Brake pedal released:
Battery voltage

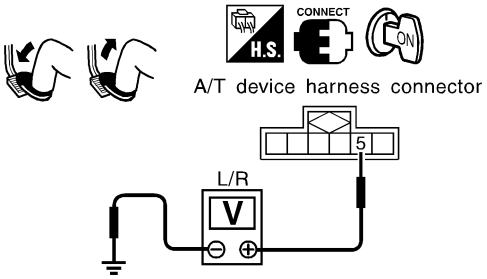

SAT421K

OK or NG

OK	▶	GO TO 5.
NG	▶	**Check the following items:** ● Harness for short or open between A/T device harness connector B8 terminal No. 5 (L/OR) and shift lock brake switch harness connector M24 terminal No. 2 (L/OR) ● Shift lock brake switch (Refer to "Component Check", AT-202.)

5	CHECK GROUND CIRCUIT

1. Turn ignition switch to "OFF" position.
2. Disconnect A/T device harness connector.
3. Check continuity between A/T device harness connector B8 terminal No. 6 (B) and ground.

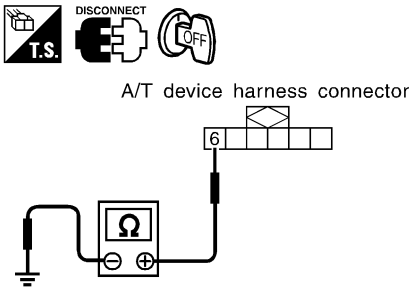

SAT422K

OK or NG

OK	▶	GO TO 6.
NG	▶	Repair harness or connector.

6	CHECK PARK POSITION SWITCH

(Refer to "Component Check", AT-202.)

OK or NG

OK	▶	GO TO 7.
NG	▶	Replace park position switch.

7	CHECK SHIFT LOCK SOLENOID	
(Refer to "Component Check", AT-202.)		
	OK or NG	
OK	▶	GO TO 8.
NG	▶	Replace shift lock solenoid.

8	CHECK SHIFT LOCK OPERATION	
1. Reconnect shift lock harness connector. 2. Turn ignition switch from "OFF" to "ON" position. (Do not start engine.) 3. Recheck shift lock operation.		
	OK or NG	
OK	▶	**INSPECTION END**
NG	▶	1. Perform A/T device input/output signal inspection test. 2. If NG, recheck harness connector connection.

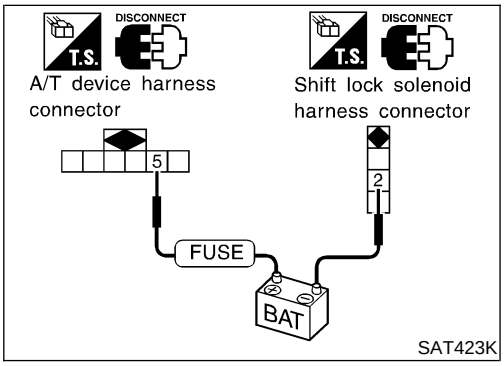

SAT423K

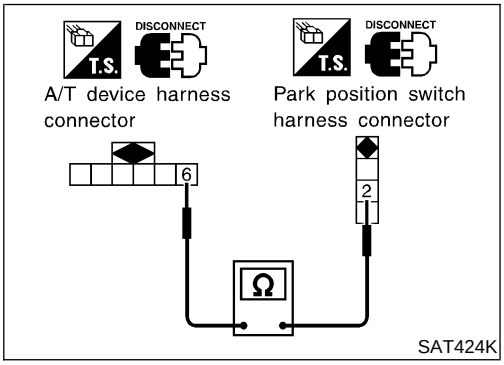

SAT424K

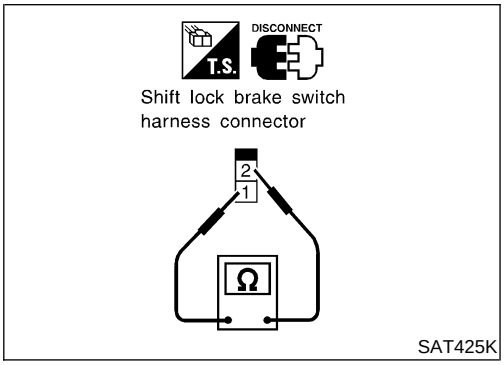

SAT425K

Component Check

NMAT0096

SHIFT LOCK SOLENOID

NMAT0096S01

- Check operation by applying battery voltage between shift lock solenoid harness connector B201 terminal No. 2 (B) and A/T device harness connector B8 terminal No. 5 (L/OR).

PARK POSITION SWITCH

NMAT0096S02

- Check continuity between park position switch harness connector B201 terminal No. 2 (L) and A/T device harness connector B8 terminal No. 6 (B).

Condition	Continuity
When selector lever is set in "P" position and selector lever button is released	Yes
Except above	No

SHIFT LOCK BRAKE SWITCH

NMAT0096S03

- Check continuity between shift lock brake switch harness connector M24 terminal Nos. 1 (G) and 2 (L/OR).

Condition	Continuity
When brake pedal is depressed	No
When brake pedal is released	Yes

Check shift lock brake switch after adjusting brake pedal — refer to BR-12, "Adjustment".

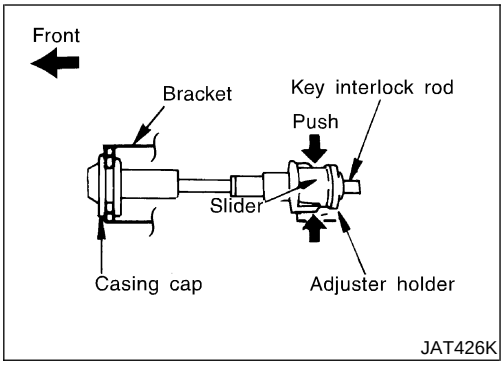

Removal

NMAT0098

CAUTION:

- **Install key interlock cable in such a way that it will not be damaged by sharp bends, twists or interference with adjacent parts.**
- **After installing key interlock cable to control device, make sure that casing cap and bracket are firmly secured in their positions. If casing cap can be removed with an external load of less than 39.2 N (4.0 kg, 8.8 lb), replace key interlock cable with new one.**

Unlock slider from adjuster holder and remove rod from cable.

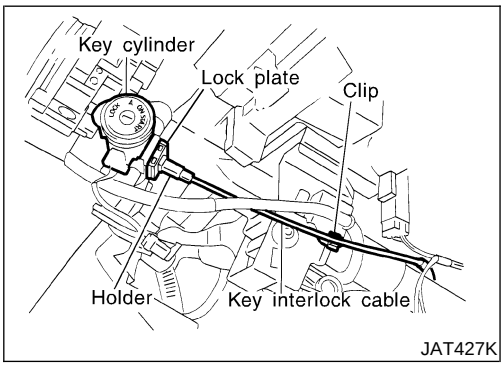

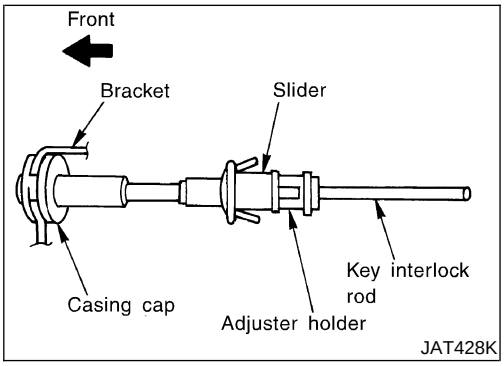

Installation

NMAT0099

1. Set key interlock cable to steering lock assembly and install lock plate.
2. Set selector lever to P position.
3. Insert interlock rod into adjuster holder.
4. Install casing cap to bracket.
5. Move slider in order to fix adjuster holder to interlock rod.

Control Device

NMAT0261

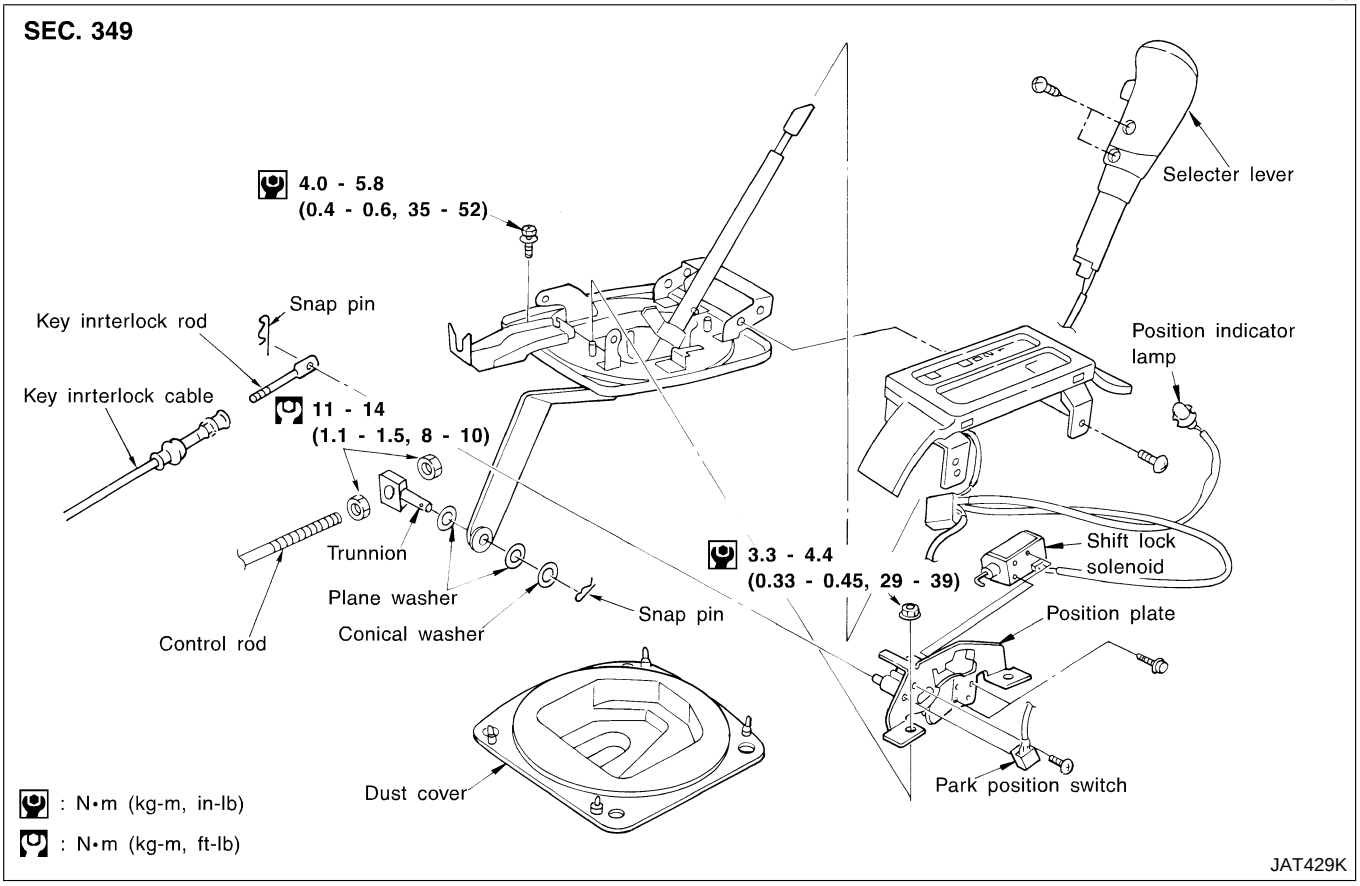

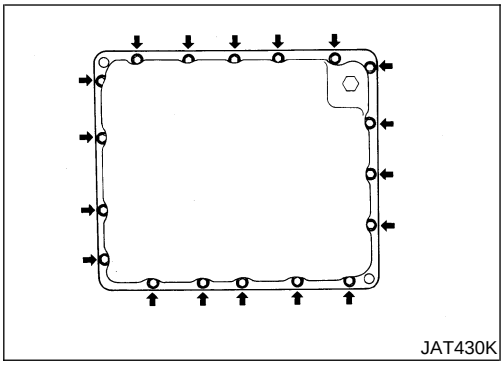
JAT430K

Control Valve Assembly and Accumulators

NMAT0100

REMOVAL

NMAT0100S01

1. Drain ATF.
2. Remove oil pan and gasket.
3. Remove oil strainer.

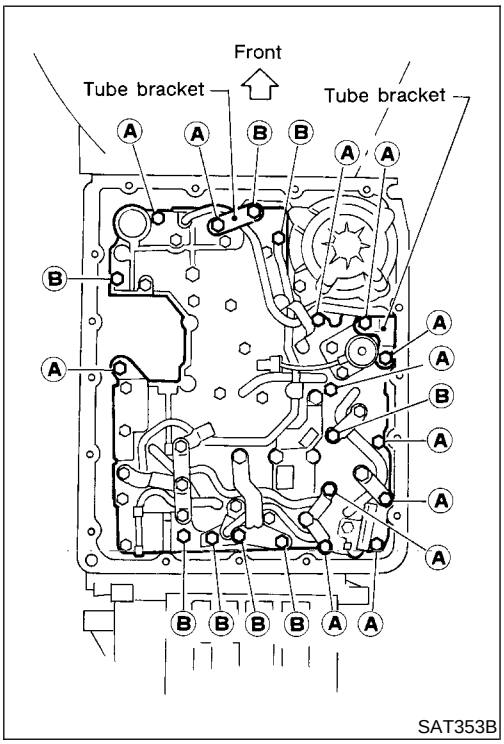

SAT353B

4. Remove control valve assembly by removing fixing bolts and disconnecting harness connector.

Bolt length and location

Bolt symbol	ℓ mm (in) ℓ
A	33 (1.30)
B	45 (1.77)

5. Remove solenoids and valves from valve body if necessary.
6. Remove terminal cord assembly if necessary.

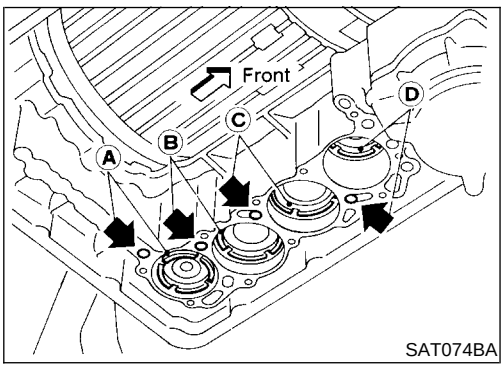

SAT074BA

7. Remove accumulator **A, B, C** and **D** by applying compressed air if necessary.
- **Hold each piston with rag.**
8. Reinstall any part removed.
- **Always use new sealing parts.**

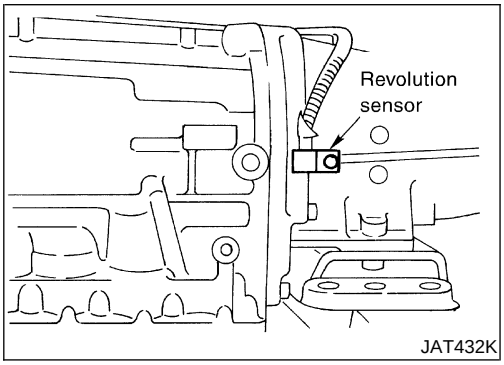

JAT432K

Revolution Sensor Replacement

NMAT0210

- Remove revolution sensor from A/T.
- **Always use new sealing parts.**

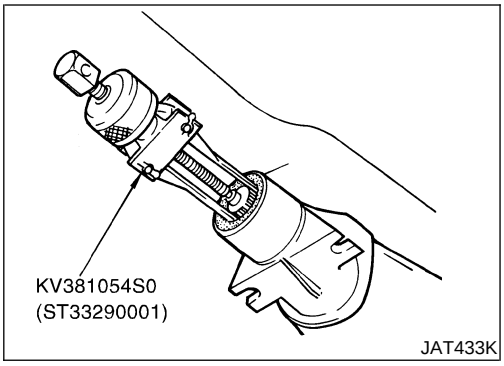

Rear Oil Seal Replacement

NMAT0211

1. Remove propeller shaft. Refer to PD-4, “Components”.
2. Remove rear oil seal.

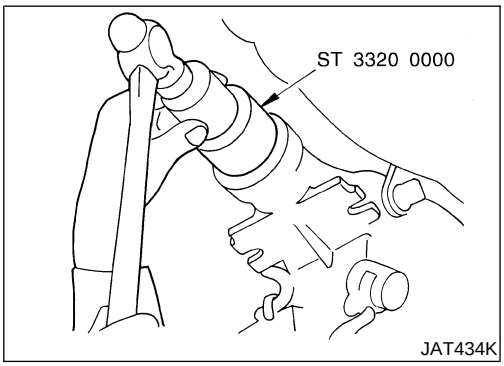

3. Install rear oil seal.
- **Apply ATF before installing.**
4. Reinstall all removed parts.
- Always use new sealing parts.

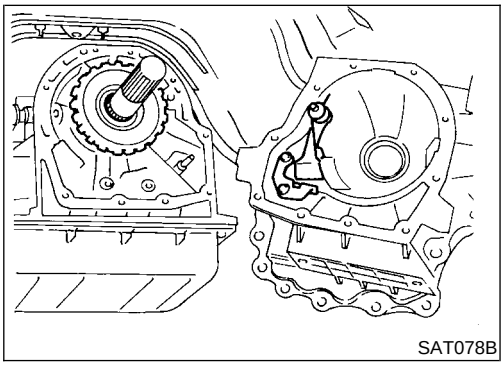

Parking Pawl Components Inspection

NMAT0213

1. Remove propeller shaft from vehicle. Refer to PD-4, “Components”.
2. Support A/T assembly with a jack.
3. Remove rear engine mounting member. Tighten rear engine mounting member to the specified torque. Refer to EM-66, “Removal”.
4. Remove rear extension assembly.
5. Replace parking components if necessary.
6. Reinstall any part removed.
- **Always use new sealing parts.**

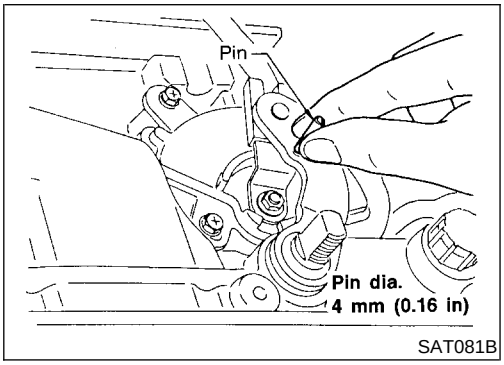

Park/Neutral Position Switch Adjustment

NMAT0104

1. Remove manual control linkage from manual shaft of A/T assembly.
2. Set manual shaft of A/T assembly in “N” position.
3. Loosen PNP switch fixing bolts.
4. Insert pin into adjustment holes in both PNP switch and manual shaft of A/T assembly as near vertical as possible.
5. Reinstall any part removed.
6. Check continuity of PNP switch. Refer to “Components Inspection”, AT-196.

Manual Control Linkage Adjustment

NMAT0105

Move the selector lever from the “P” position to “1” position. You should be able to feel the detents in each position.
If the detents cannot be felt or the pointer indicating the position is improperly aligned, the linkage needs adjustment.

1. Place selector lever in “P” position.
2. Loosen lock nuts.

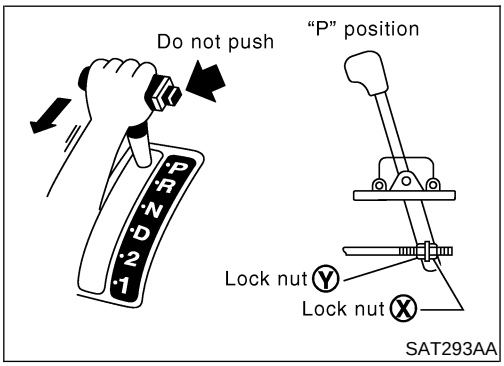

3. Tighten lock nut X until it touches trunnion, pulling selector lever toward “R” position side without pushing button.
4. Back off lock nut X 1 turn and tighten lock nut Y to the specified torque.

   Lock nut

   : 11 - 15 N·m (1.1 - 1.5 kg-m, 8 - 11 ft-lb)
5. Move selector lever from “P” position to “1” position. Make sure that selector lever can move smoothly.

Removal

NMAT0214

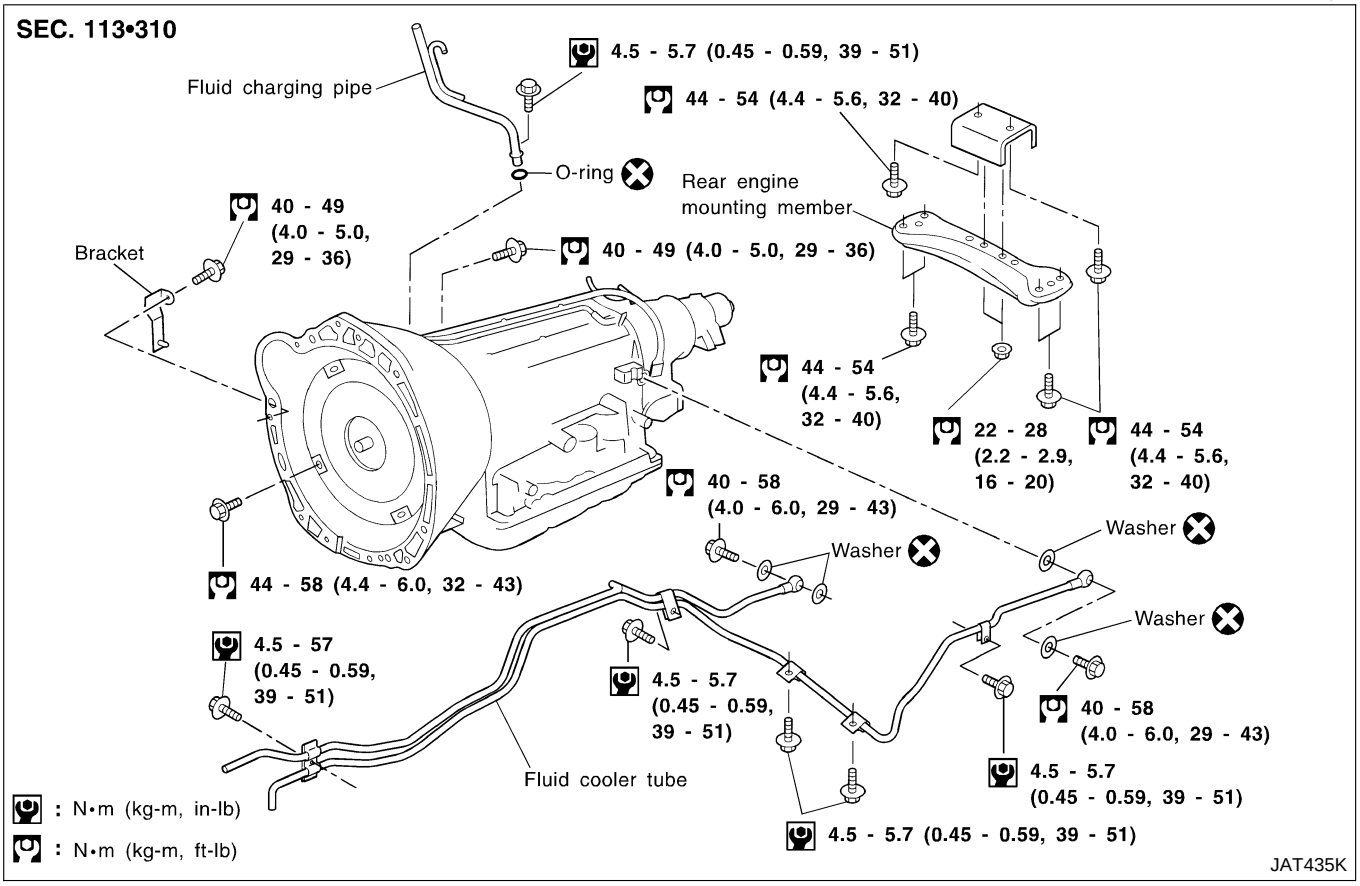

1. Remove battery negative terminal.
2. Remove exhaust tube.
3. Remove fluid charging pipe from A/T assembly.
4. Remove fluid cooler pipe from A/T assembly.
5. Plug up openings such as the fluid charging pipe hole, etc.
6. Remove propeller shaft. Refer to PD-4, “Components”.

- **Insert plug into rear oil seal after removing rear propeller shaft.**
- **Be careful not to damage spline, sleeve yoke and rear oil seal.**

7. Remove A/T control cable from A/T assembly.
8. Disconnect PNP switch, solenoid and revolution sensor harness connectors.

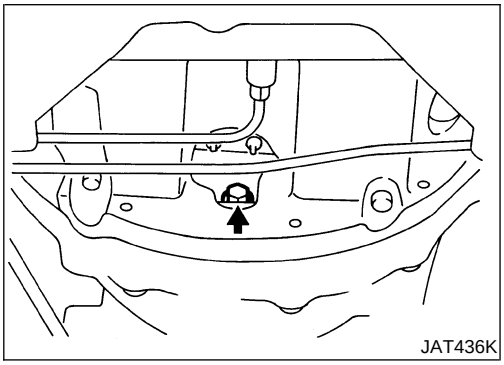

9. Remove air breather hose.
10. Remove starter motor.
11. Remove dust cover from A/T assembly.
12. Remove bolts securing torque converter to drive plate.

- **Remove the bolts by turning crankshaft.**

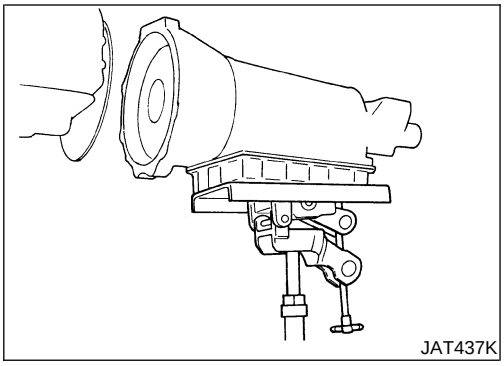

13. Support A/T with a jack.
14. Remove rear engine mounting member from body and A/T assembly. Tighten rear engine mounting member to the specified torque. Refer to EM-66, "Removal".
15. Remove bolts securing A/T assembly to engine.
- **Secure torque converter to prevent it from dropping.**
- **Secure A/T assembly to a jack.**
16. Lower A/T assembly.

Installation

NMAT0107

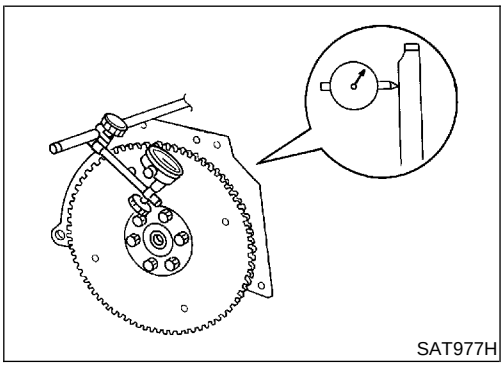

1. Drive plate runout

Maximum allowable runout:

Refer to EM-77, "Flywheel/Drive Plate Runout".

- If this runout is out of specification, replace drive plate with ring gear.

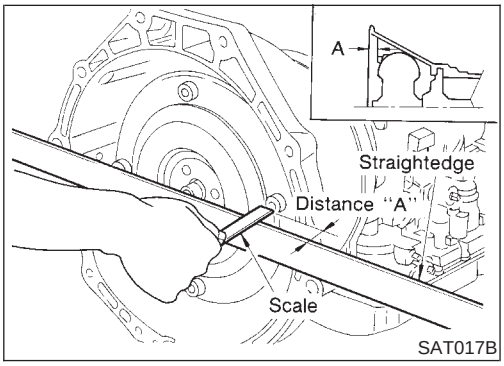

2. When connecting torque converter to transmission, measure distance "A" to be certain that they are correctly assembled.

Distance "A":

23.5 mm (0.925 in) or more

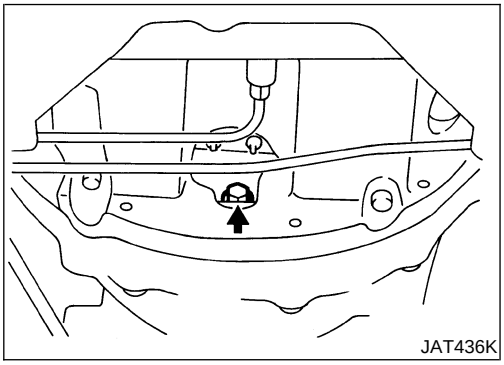

3. Install converter to drive plate.
- **After converter is installed to drive plate, rotate crankshaft several turns and check to be sure that transmission rotates freely without binding.**

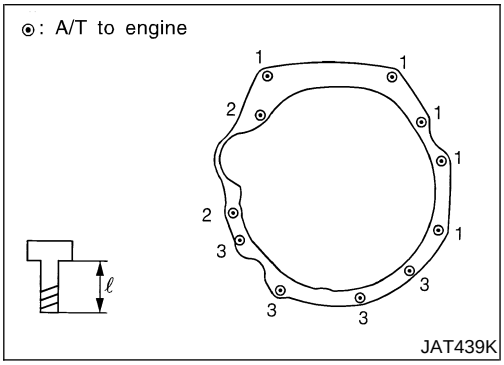

4. Tighten bolts securing transmission.

Bolt No.	Tightening torque N·m (kg-m, ft-lb)	Bolt length "ℓ" mm (in)
1	70 - 79 (7.1 - 8.1, 52 - 58)	68 (2.68)
2	70 - 79 (7.1 - 8.1, 52 - 58)	78 (3.07)
3	29 - 39 (3.0 - 4.0, 22 - 29)	65 (2.56)

5. Reinstall any part removed.

6. Check fluid level in transmission.
7. Move selector lever through all positions to be sure that transmission operates correctly.
   With parking brake applied, rotate engine at idling. Move selector lever through "N" to "D", to "2", to "1" and to "R" positions. A slight shock should be felt by hand gripping selector each time transmission is shifted.
8. Perform road test. Refer to "ROAD TEST", AT-52.

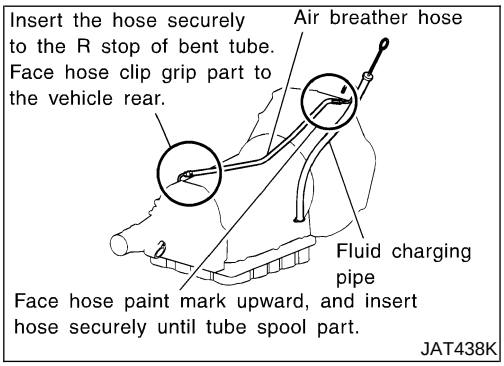

AIR BREATHER HOSE

NMAT0107S02

Components

NMAT0108

SEC. 311•313•315

: N•m (kg-m, ft-lb)

: Apply recommended sealant (Nissan genuine part: KP610-00250) or equivalent.

ATF : Apply ATF.

: Apply petroleum jelly.

★ : Select with proper thickness.

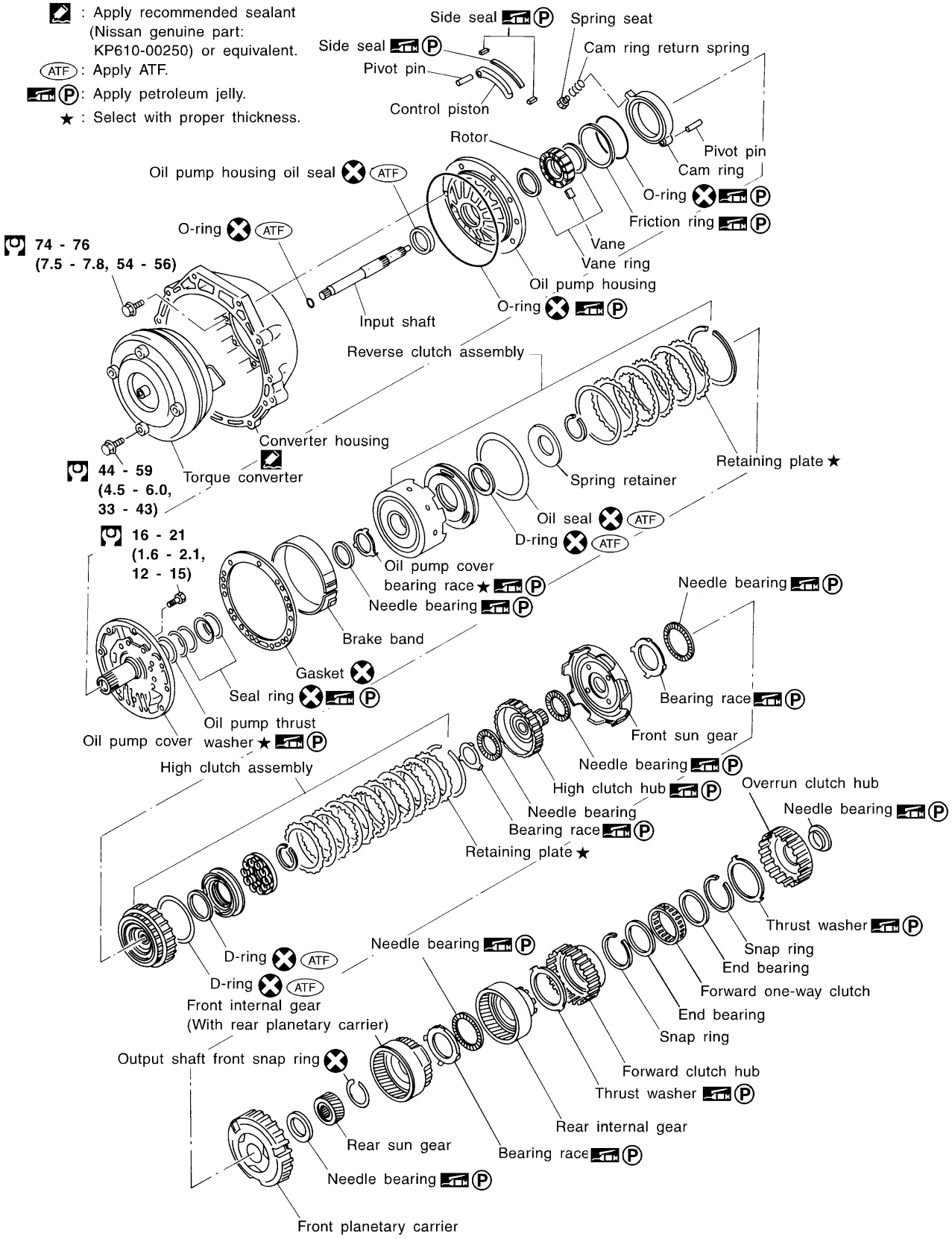

SAT431K

SEC. 311•315•317

: N•m (kg-m, in-lb)
: N•m (kg-m, ft-lb)
ATF : Apply ATF.
P : Apply petroleum jelly.
★ : Select with proper thickness.
☆ : Adjustment is required.

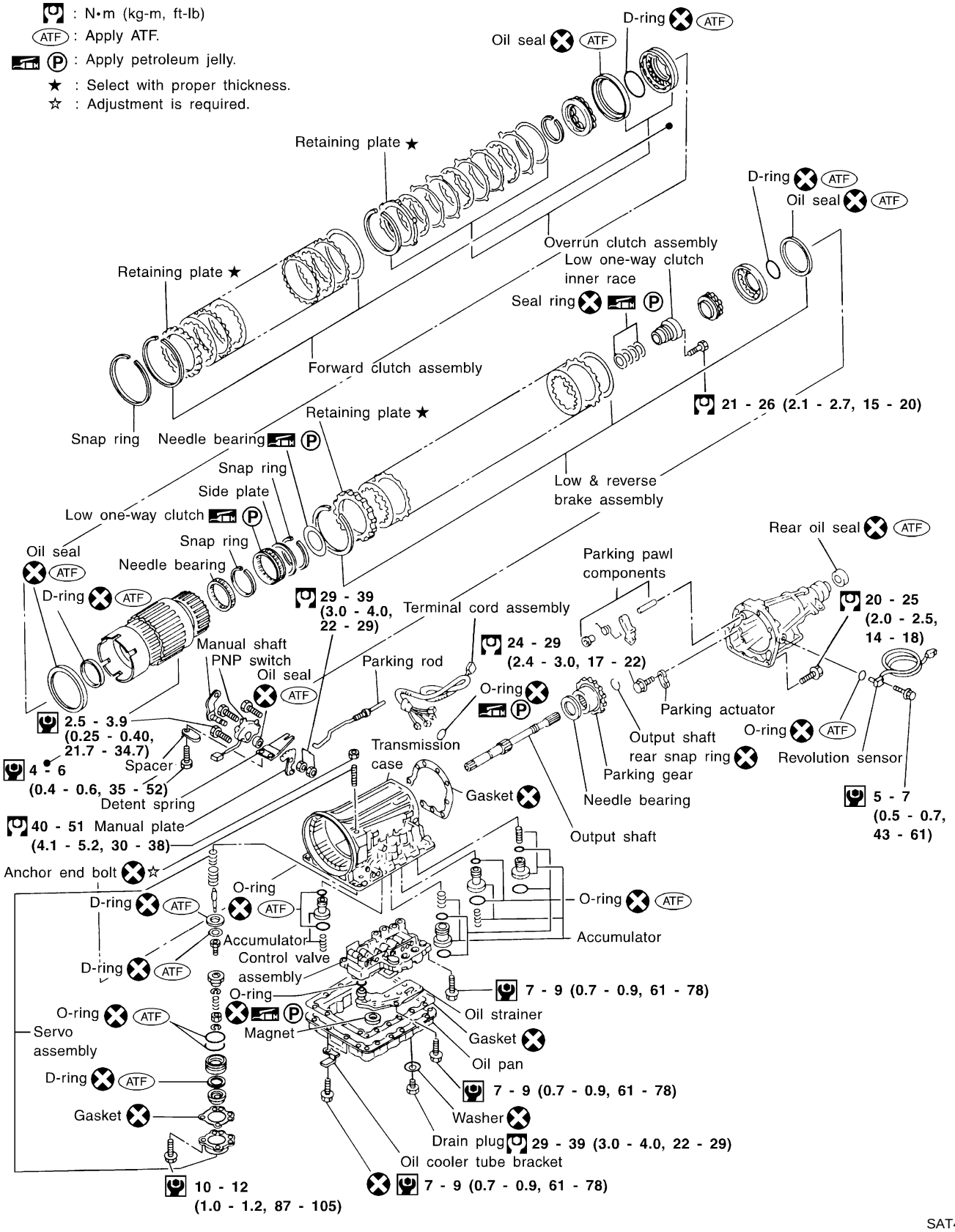

SAT440K

Oil Channel

NMAT0109

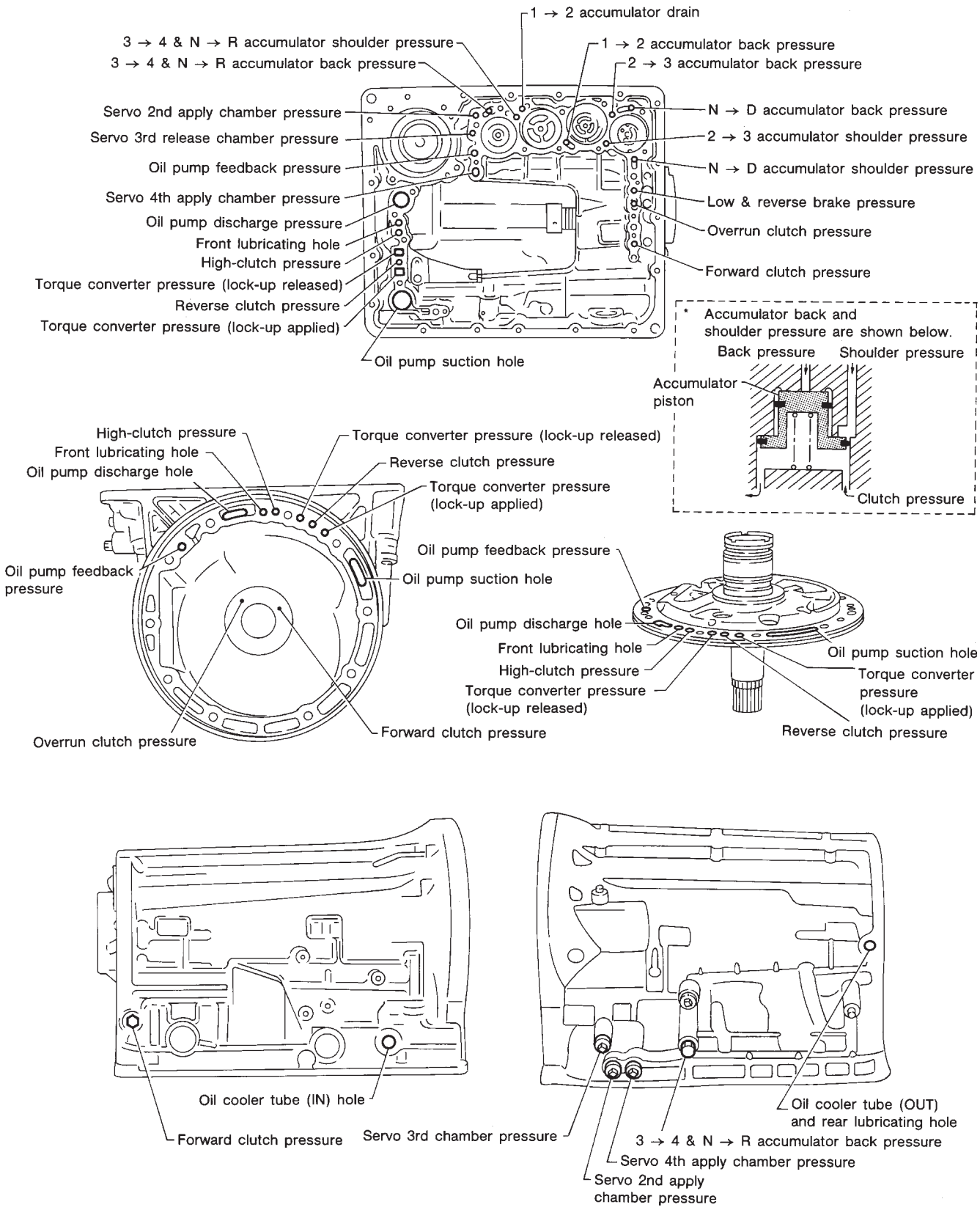

SAT185B

Locations of Needle Bearings, Thrust Washers and Snap Rings

NMAT0110

Outer diameter of snap rings

Item number	Outer diameter mm (in)
2	161.0 (6.34)
3	140.1 (5.52)
4	156.4 (6.16)
6	142.0 (5.59)
7	159.2 (6.27)

Thrust washers

Item number	Color
1	Black
5	White

Outer diameter of needle bearings

Item number	Outer diameter mm (in)
8	47 (1.85)
9	53 (2.09)
10	53 (2.09)
11	78 (3.07)
12	53 (2.09)
13	78 (3.07)
14	57 (2.24)
15	78 (3.07)
16	64 (2.52)
17	53 (2.09)

Inner diameter of bearing races

Item number	Outer diameter mm (in)
11	58.8 (2.315)
13	58.8 (2.315)

Installation of one-piece bearings

Item number	Bearing race (black) location
10	Front
12	Front
15	Rear side
16	Rear side

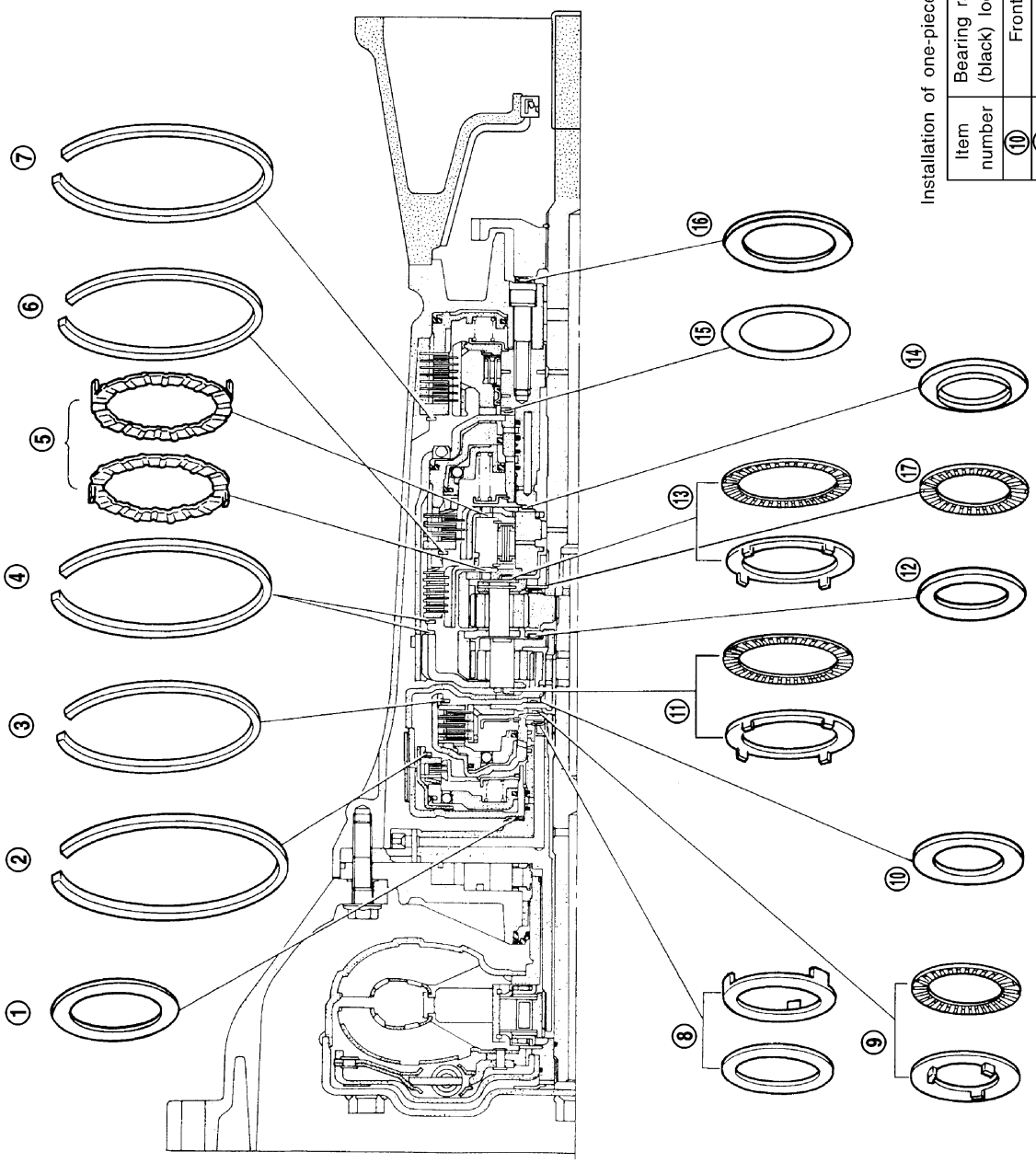

SAT441KA

DISASSEMBLY

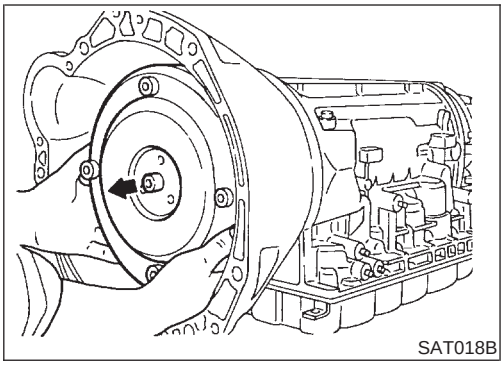
SAT018B

1. Drain ATF through drain plug.
2. Remove torque converter by holding it firmly and turning while pulling straight out.

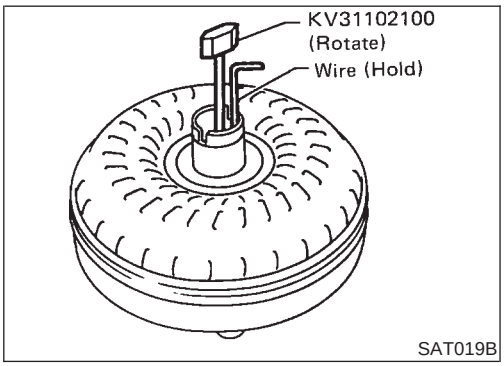

SAT019B

3. Check torque converter one-way clutch.
a. Insert Tool into spline of one-way clutch inner race.
b. Hook bearing support unitized with one-way clutch outer race with suitable wire.
c. Check that one-way clutch inner race rotates only clockwise with Tool while holding bearing support with wire.

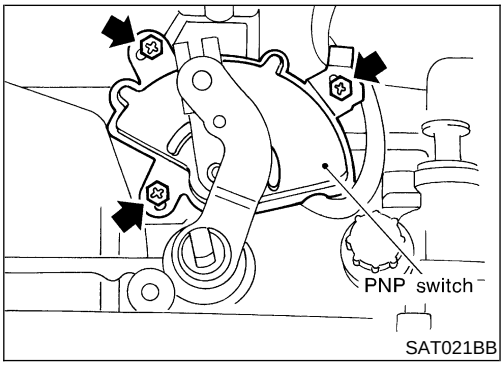

SAT021BB

4. Remove PNP switch from transmission case.

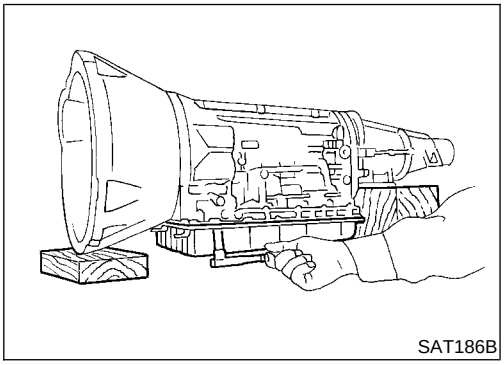
SAT186B

5. Remove oil pan.
- Always place oil pan straight down so that foreign particles inside will not move.

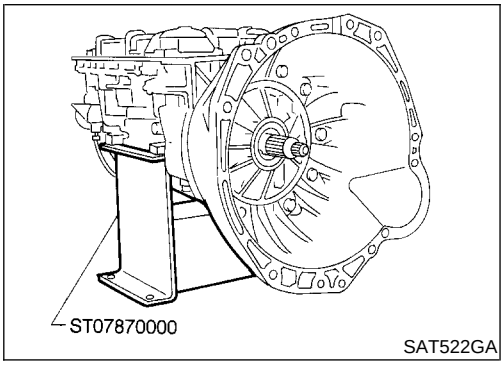

SAT522GA

6. Place transmission into Tool with the control valve facing up.

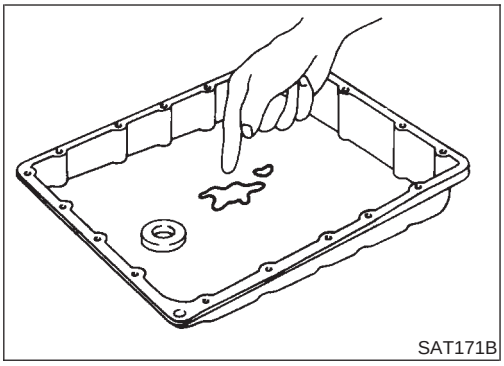
SAT171B

7. Check foreign materials in oil pan to help determine cause of malfunction. If the fluid is very dark, smells burned, or contains foreign particles, the frictional material (clutches, band) may need replacement. A tacky film that will not wipe clean indicates varnish build up. Varnish can cause valves, servo, and clutches to stick and may inhibit pump pressure.
- **If frictional material is detected, replace radiator after repair of A/T. Refer to LC-14, “Components”.**

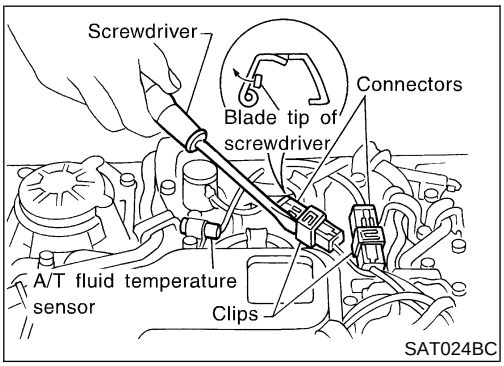

SAT024BC

8. Remove torque converter clutch solenoid valve and A/T fluid temperature sensor connectors.
- **Be careful not to damage connector.**

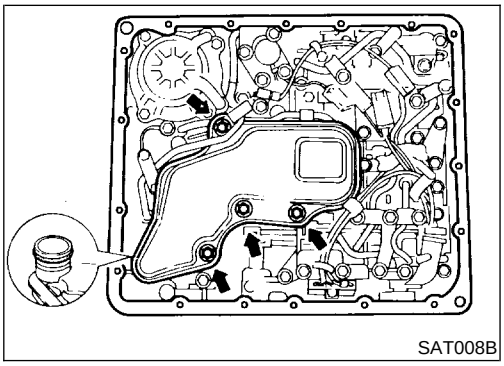
SAT008B

9. Remove oil strainer.

a. Remove oil strainer from control valve assembly.
Then remove O-ring from oil strainer.

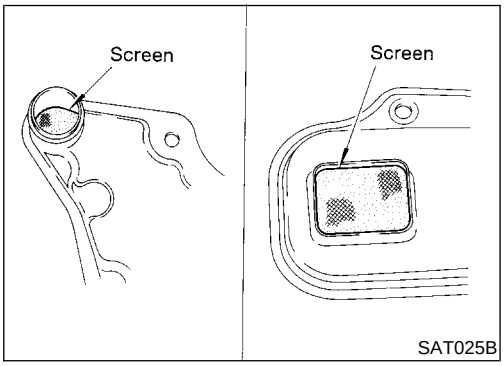

SAT025B

b. Check oil strainer screen for damage.

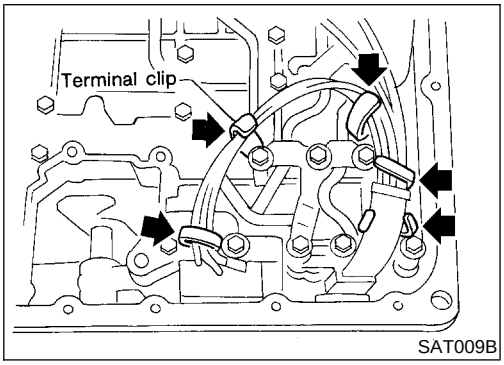

SAT009B

10. Remove control valve assembly.

a. Straighten terminal clips to free terminal cords then remove terminal clips.

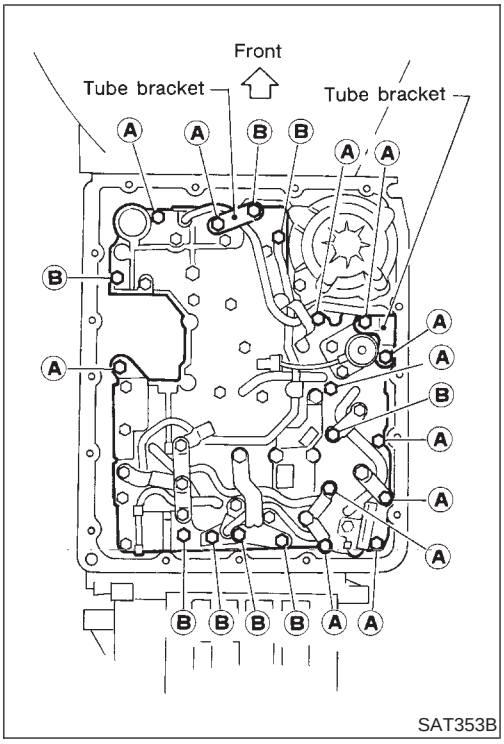

SAT353B

b. Remove bolts A and B, and remove control valve assembly from transmission.

Bolt symbol	Length mm (in)
A	33 (1.30)
B	45 (1.77)

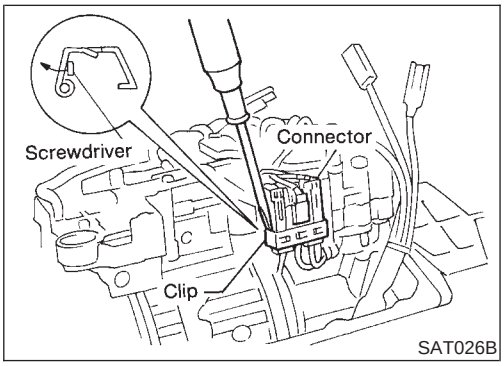

SAT026B

c. Remove solenoid connector.

- **Be careful not to damage connector.**

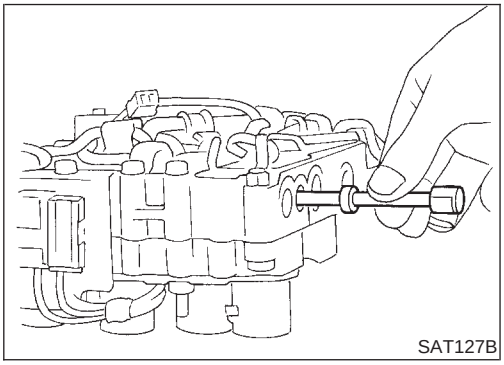
SAT127B

d. Remove manual valve from control valve assembly.

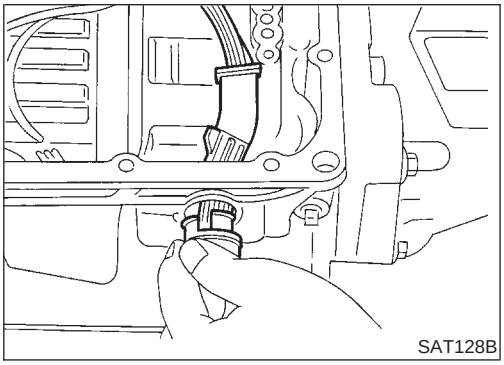
SAT128B

11. Remove terminal cord assembly from transmission case while pushing on stopper.

- **Be careful not to damage cord.**
- **Do not remove terminal cord assembly unless it is damaged.**

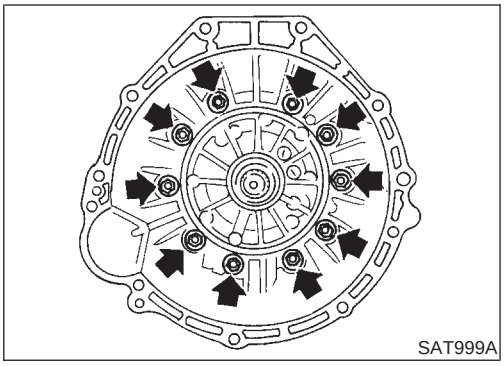

12. Remove converter housing from transmission case.
- **Be careful not to scratch converter housing.**

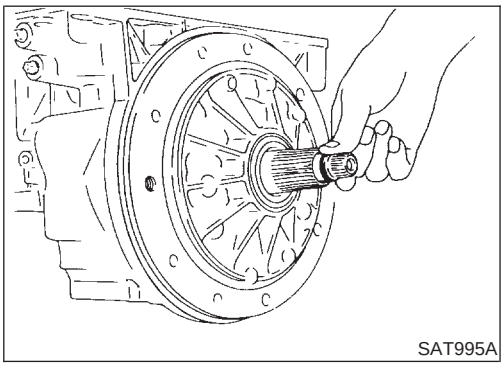

13. Remove O-ring from input shaft.

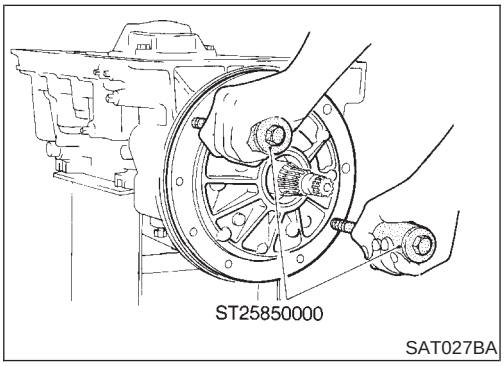

14. Remove oil pump assembly.

a. Attach Tool to oil pump assembly and extract it evenly from transmission case.

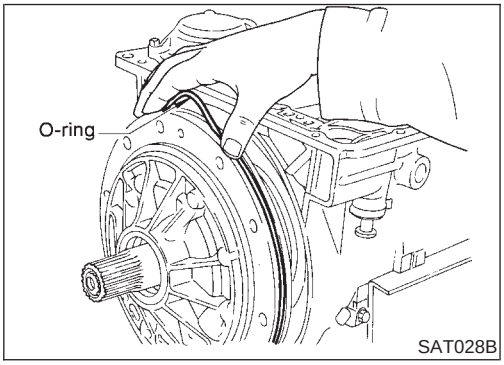

b. Remove O-ring from oil pump assembly.

c. Remove traces of sealant from oil pump housing.

- **Be careful not to scratch pump housing.**

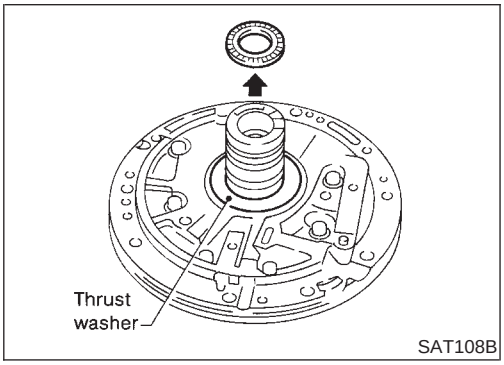

d. Remove needle bearing and thrust washer from oil pump assembly.

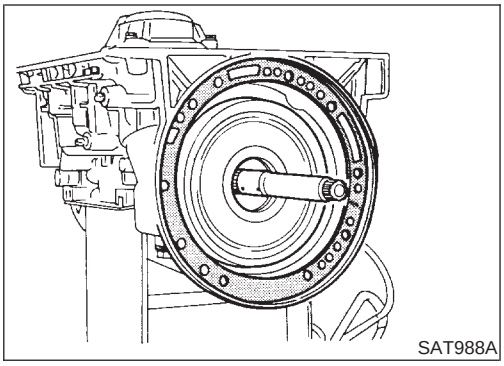
SAT988A

15. Remove input shaft and oil pump gasket.

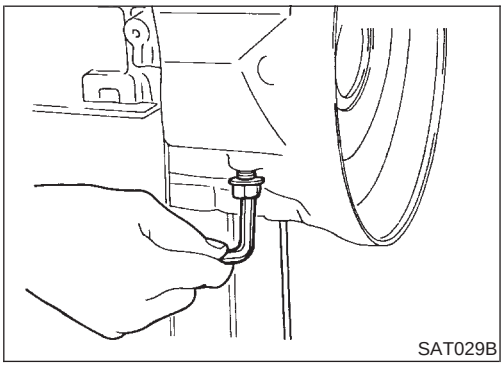
SAT029B

16. Remove brake band and band strut.
a. Loosen lock nut and remove band servo anchor end pin from transmission case.

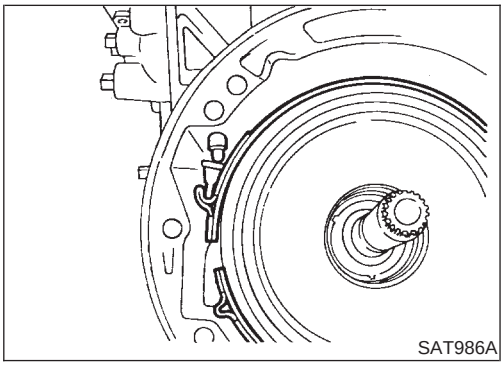
SAT986A

b. Remove brake band and band strut from transmission case.

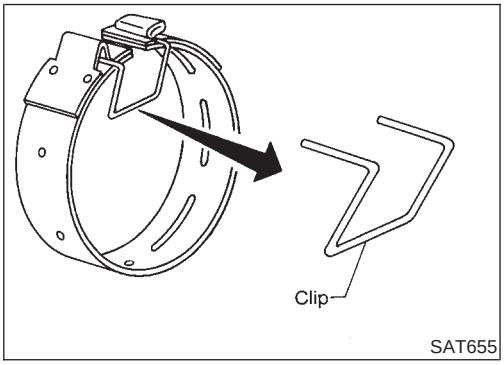

SAT655

c. Hold brake band in a circular shape with clip.

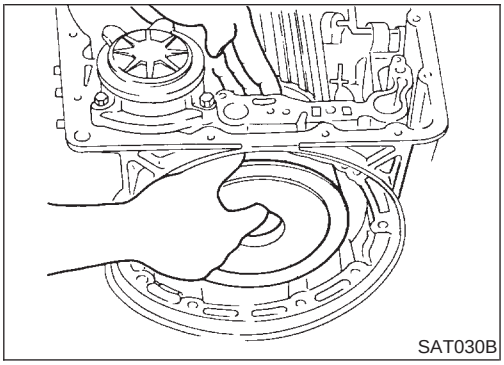
SAT030B

17. Remove front side clutch and gear components.
a. Remove clutch pack (reverse clutch, high clutch and front sun gear) from transmission case.

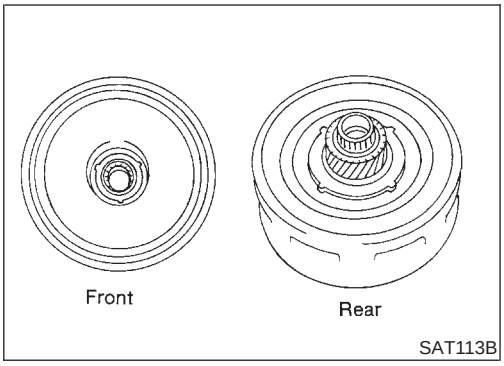

b. Remove front bearing race from clutch pack.
c. Remove rear bearing race from clutch pack.

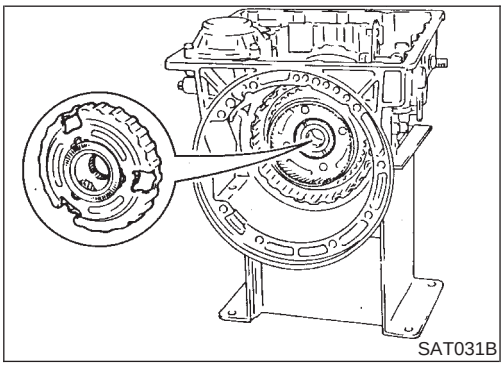

d. Remove front planetary carrier from transmission case.

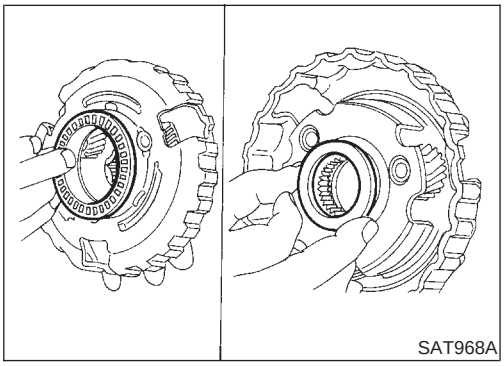

e. Remove front needle bearing from front planetary carrier.
f. Remove rear bearing from front planetary carrier.

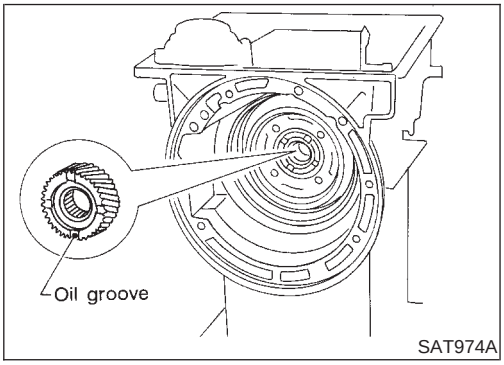

g. Remove rear sun gear from transmission case.

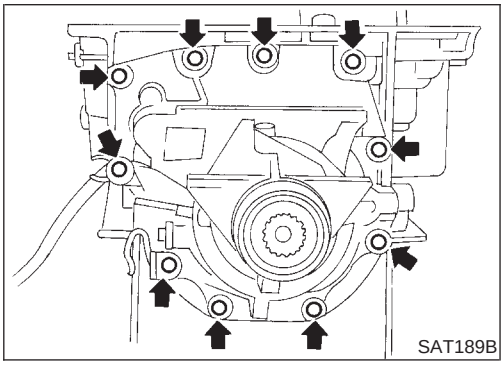

18. Remove rear extension.
a. Remove rear extension from transmission case.
b. Remove rear extension gasket from transmission case.

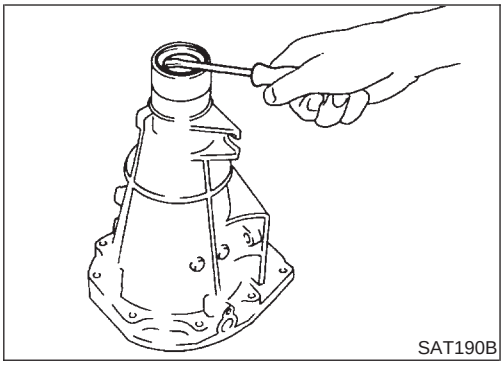
SAT190B

c. Remove oil seal from rear extension.
- **Be careful not to scratch rear extension.**
- **Do not remove oil seal unless it is to be replaced.**

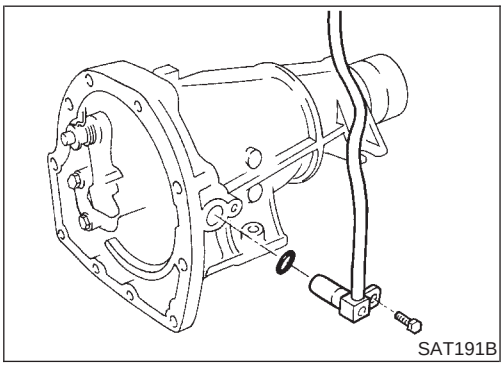
SAT191B

d. Remove revolution sensor from rear extension.
e. Remove O-ring from revolution sensor.

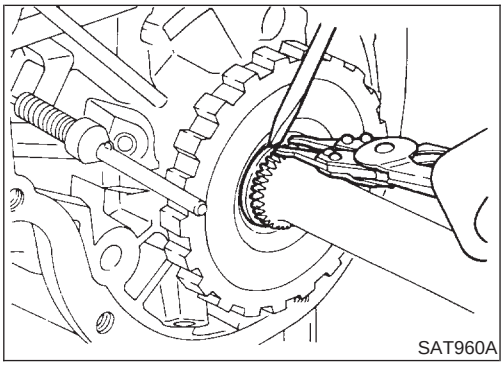
SAT960A

19. Remove output shaft and parking gear.
a. Remove rear snap ring from output shaft.

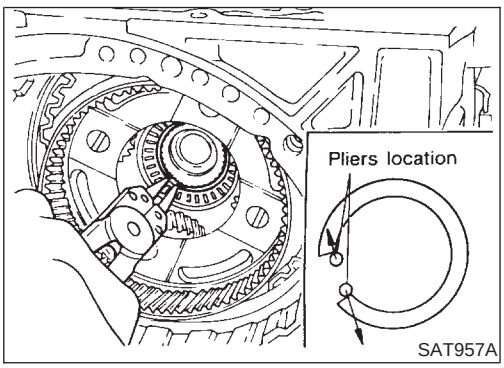

SAT957A

b. Slowly push output shaft all the way forward.
- **Do not use excessive force.**

c. Remove snap ring from output shaft.

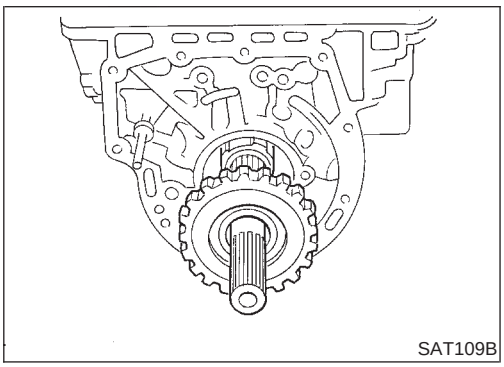
SAT109B

d. Remove output shaft and parking gear as a unit from transmission case.
e. Remove parking gear from output shaft.

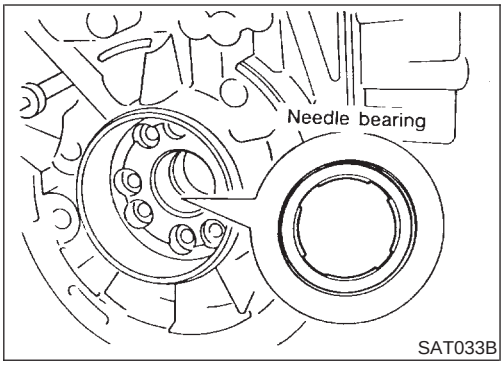

f. Remove needle bearing from transmission case.

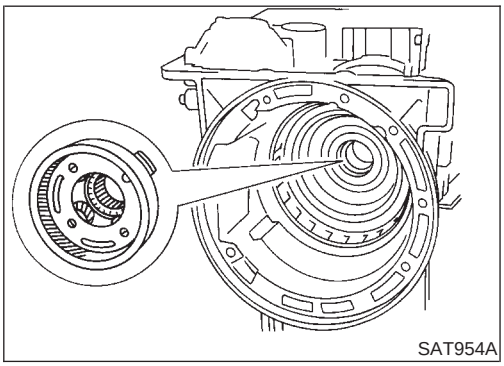

20. Remove rear side clutch and gear components.

a. Remove front internal gear.

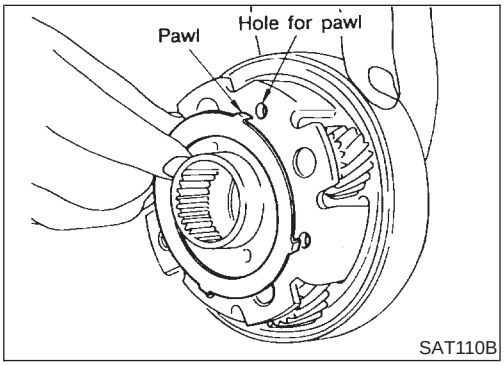

b. Remove bearing race from front internal gear.

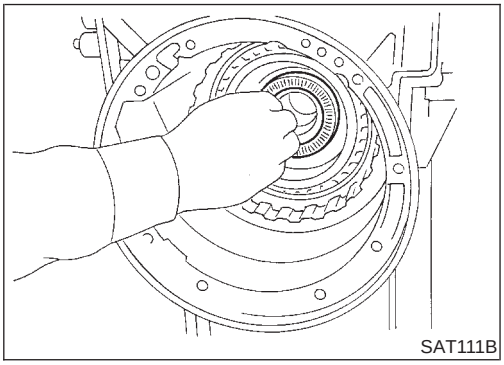

c. Remove needle bearing from rear internal gear.

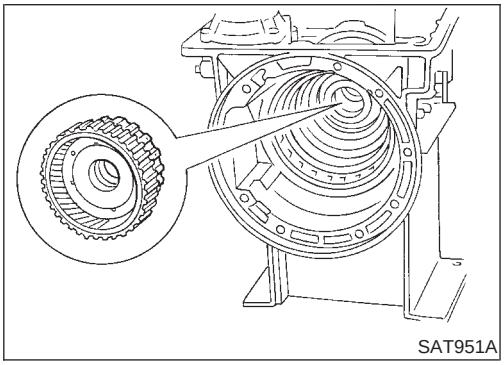

d. Remove rear internal gear, forward clutch hub and overrun clutch hub as a set from transmission case.

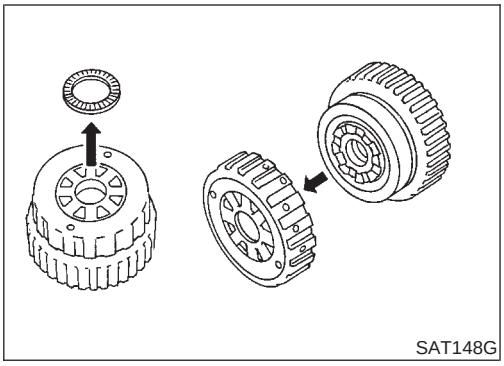
SAT148G

e. Remove needle bearing from overrun clutch hub.
f. Remove overrun clutch hub from rear internal gear and forward clutch hub.

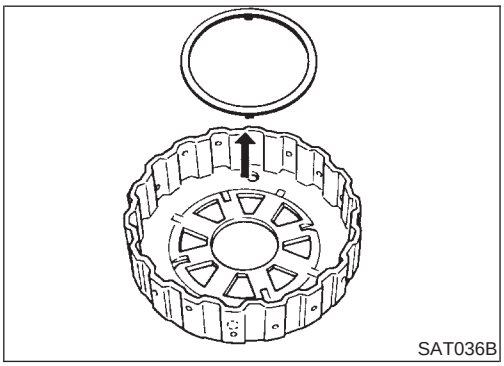
SAT036B

g. Remove thrust washer from overrun clutch hub.

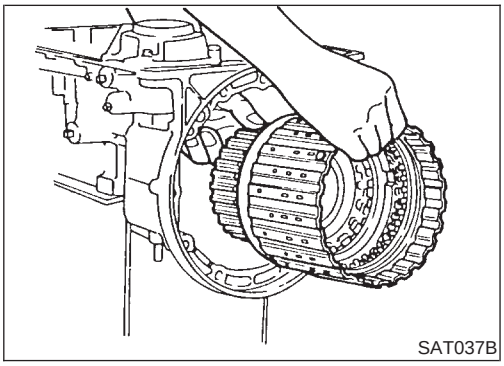
SAT037B

h. Remove forward clutch assembly from transmission case.

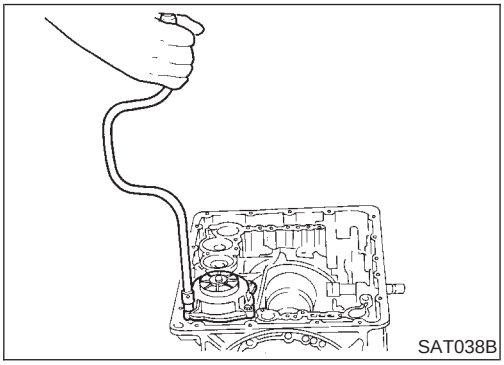
SAT038B

21. Remove band servo and accumulator components.
a. Remove band servo retainer from transmission case.

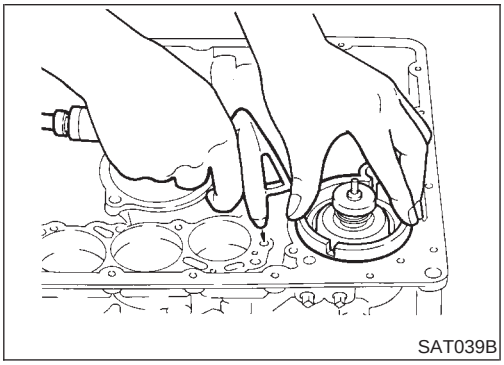
SAT039B

b. Apply compressed air to oil hole until band servo piston comes out of transmission case.
- **Hold piston with a rag and gradually direct air to oil hole.**

c. Remove return springs.

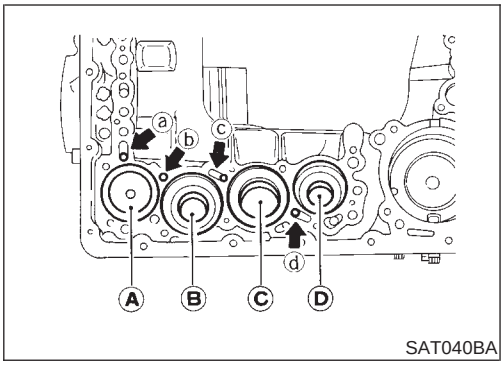

SAT040BA

d. Remove springs from accumulator pistons B, C and D.
e. Apply compressed air to each oil hole until piston comes out.
- **Hold piston with a rag and gradually direct air to oil hole.**

Identification of accumulator pistons	A	B	C	D
Identification of oil holes	a	b	c	d

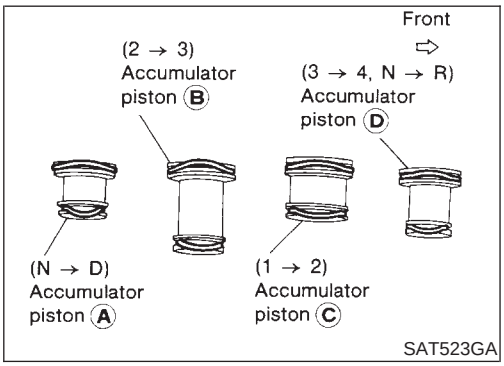

SAT523GA

f. Remove O-ring from each piston.

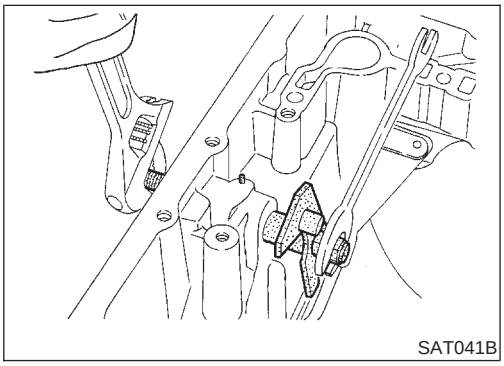
SAT041B

22. Remove manual shaft components, if necessary.
a. Hold width across flats of manual shaft (outside the transmission case) and remove lock nut from shaft.

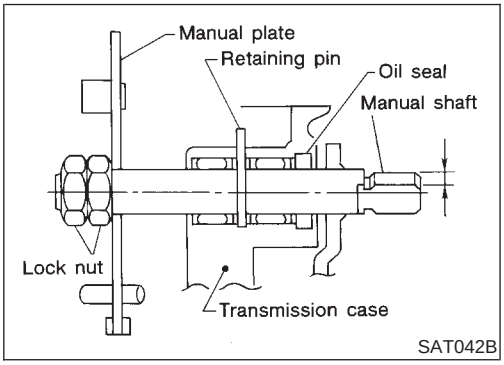

SAT042B

b. Remove retaining pin from transmission case.

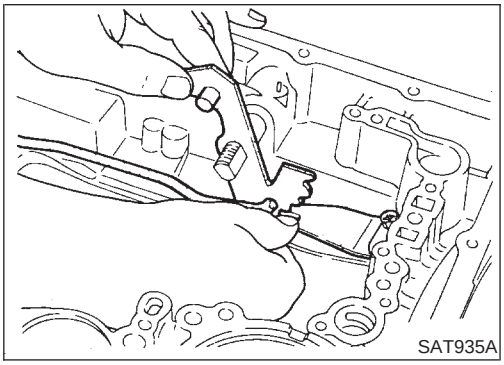
SAT935A

c. While pushing detent spring down, remove manual plate and parking rod from transmission case.

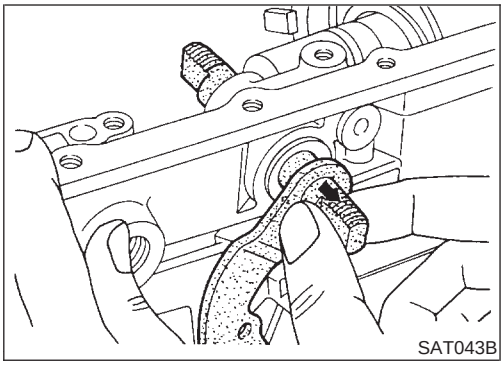

d. Remove manual shaft from transmission case.

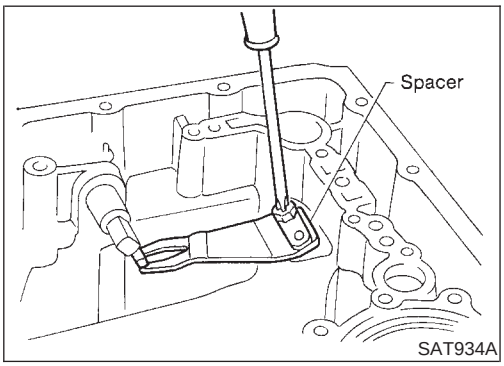

e. Remove spacer and detent spring from transmission case.

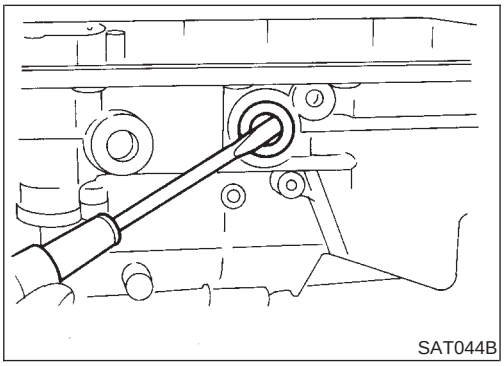

f. Remove oil seal from transmission case.

Oil Pump

COMPONENTS

NMAT0112

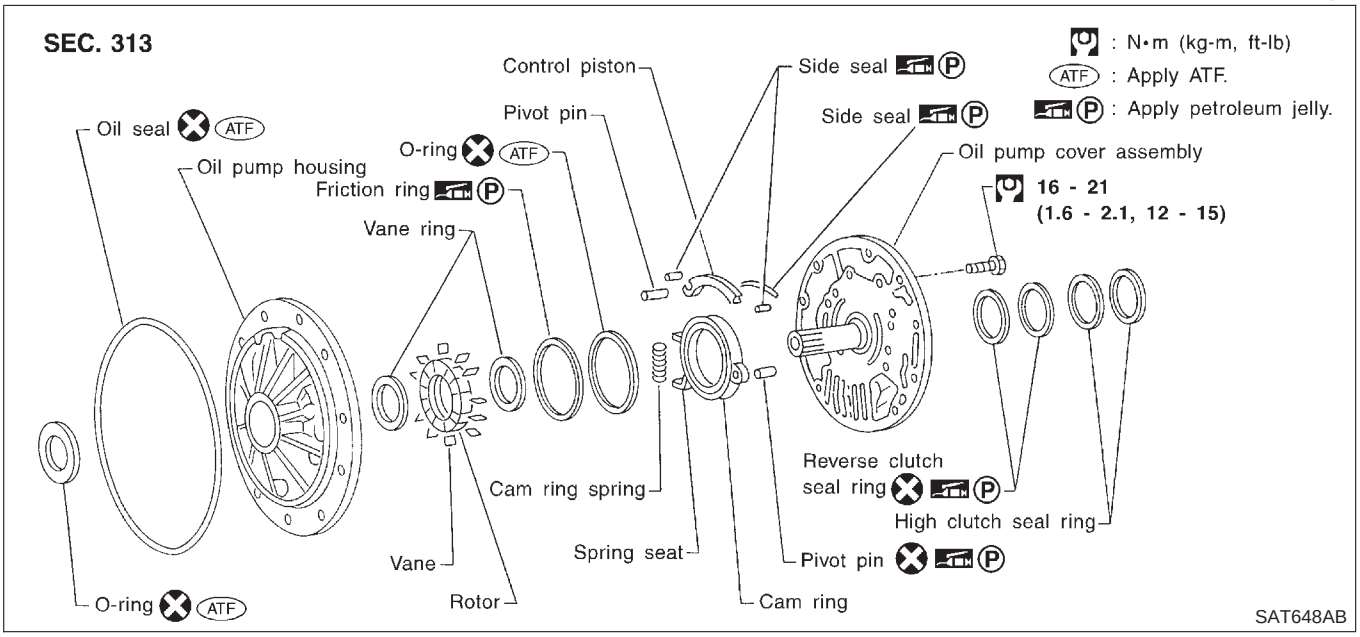

DISASSEMBLY

NMAT0113

1. Loosen bolts in numerical order and remove oil pump cover.

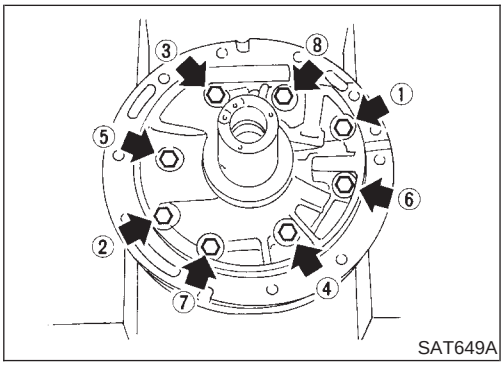

2. Remove rotor, vane rings and vanes.

- **Inscribe a mark on back of rotor for identification of fore-aft direction when reassembling rotor. Then remove rotor.**

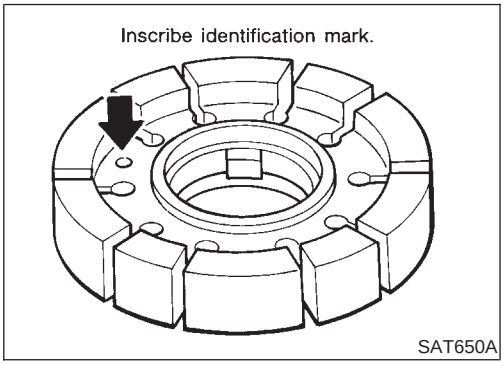

3. While pushing on cam ring remove pivot pin.

- **Be careful not to scratch oil pump housing.**

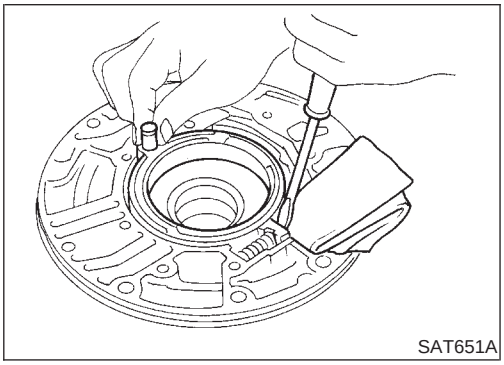

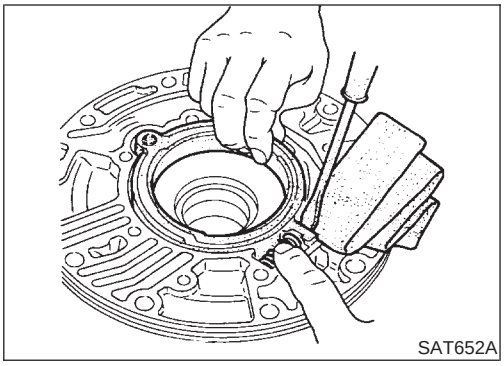
SAT652A

4. While holding cam ring and spring lift out cam ring spring.
- **Be careful not to damage oil pump housing.**
- **Hold cam ring spring to prevent it from jumping.**

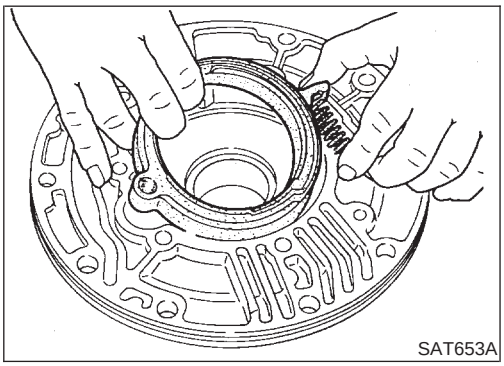
SAT653A

5. Remove cam ring and cam ring spring from oil pump housing.

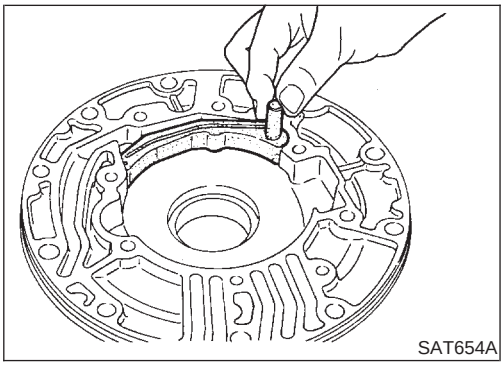
SAT654A

6. Remove pivot pin from control piston and remove control piston assembly.

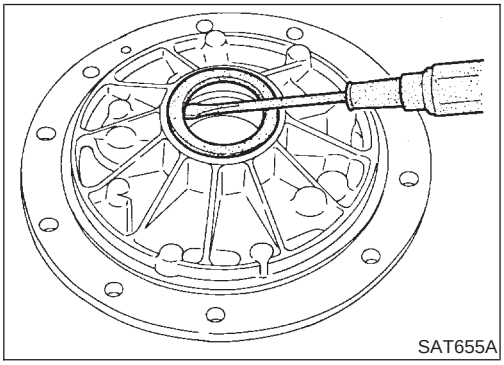
SAT655A

7. Remove oil seal from oil pump housing.
- **Be careful not to scratch oil pump housing.**

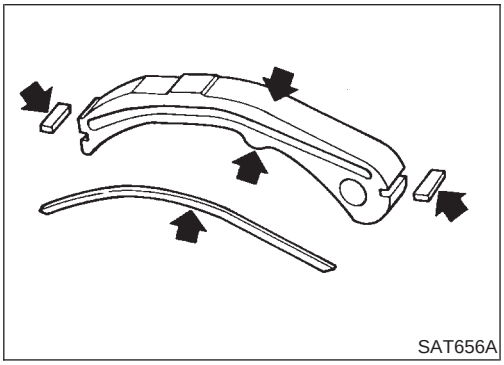
SAT656A

INSPECTION

NMAT0114

Oil Pump Cover, Rotor, Vanes, Control Piston, Side Seals, Cam Ring and Friction Ring

NMAT0114S01

- Check for wear or damage.

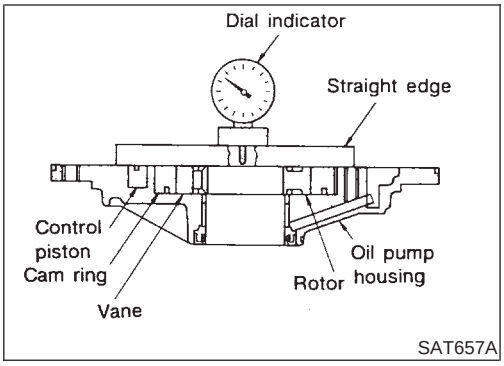

Side Clearances

NMAT0114S02

- Measure side clearances between end of oil pump housing and cam ring, rotor, vanes and control piston. Measure in at least four places along their circumferences. Maximum measured values should be within specified positions.
- **Before measurement, check that friction rings, O-ring, control piston side seals and cam ring spring are removed.**

  Standard clearance (Cam ring, rotor, vanes and control piston):

  Refer to SDS, AT-292.
- If not within standard clearance, replace oil pump assembly except oil pump cover assembly.

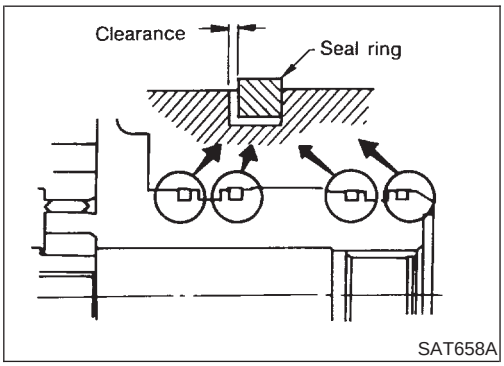

Seal Ring Clearance

NMAT0114S03

- Measure clearance between seal ring and ring groove.

  Standard clearance:

  0.10 - 0.25 mm (0.0039 - 0.0098 in)

  Wear limit:

  0.25 mm (0.0098 in)
- If not within wear limit, replace oil pump cover assembly.

ASSEMBLY

NMAT0115

1. Drive oil seal into oil pump housing.
- **Apply ATF to outer periphery and lip surface.**

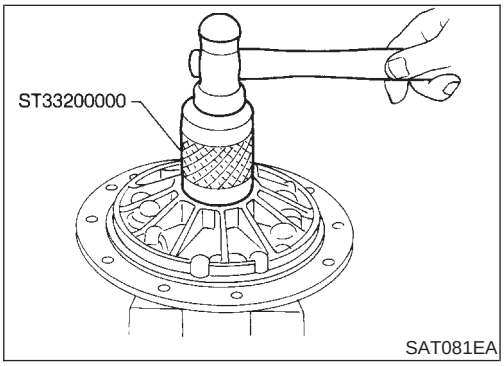

2. Install cam ring in oil pump housing by the following

a. Install side seal on control piston.
- **Pay attention to its direction — Black surface goes toward control piston.**
- **Apply petroleum jelly to side seal.**

b. Install control piston on oil pump.

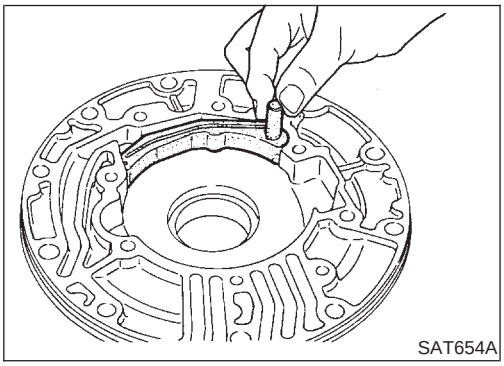

c. Install O-ring and friction ring on cam ring.
- **Apply petroleum jelly to O-ring.**

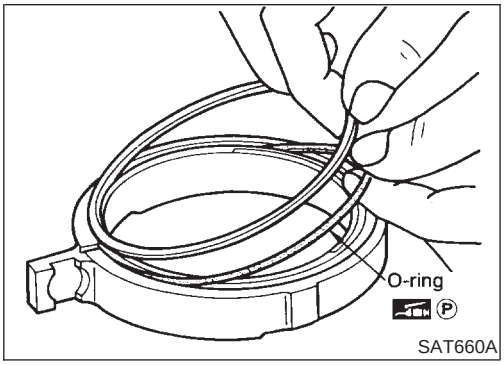

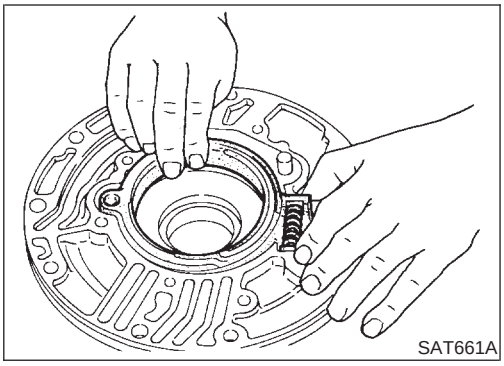
SAT661A

d. Assemble cam ring, cam ring spring and spring seat. Install spring by pushing it against pump housing.

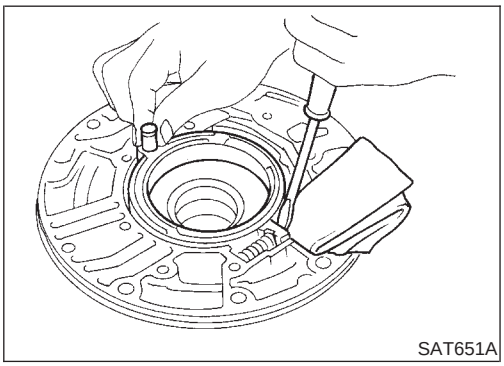
SAT651A

e. While pushing on cam ring install pivot pin.

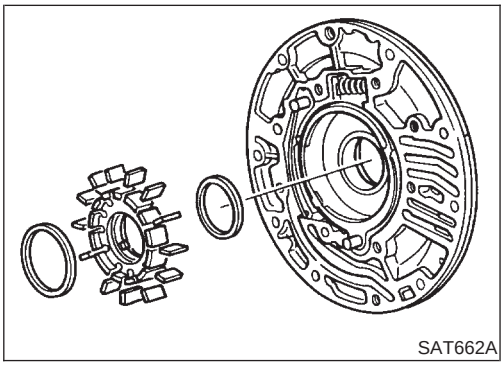
SAT662A

3. Install rotor, vanes and vane rings.
- **Pay attention to direction of rotor.**

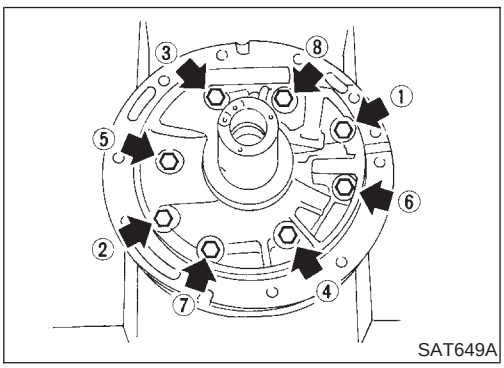

SAT649A

4. Install oil pump housing and oil pump cover.

a. Wrap masking tape around splines of oil pump cover assembly to protect seal. Position oil pump cover assembly in oil pump housing assembly, then remove masking tape.

b. Tighten bolts in a criss-cross pattern.

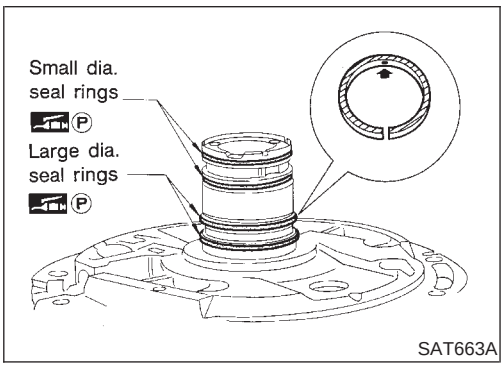

SAT663A

5. Install new seal rings carefully after packing ring grooves with petroleum jelly. Press rings down into jelly to a close fit.
- **Seal rings come in two different diameters. Check fit carefully in each groove.**

  Small dia. seal ring:

  No mark

  Large dia. seal ring:

  Yellow mark in area shown by arrow
- **Do not spread gap of seal ring excessively while installing. It may deform ring.**

Control Valve Assembly

COMPONENTS

NMAT0116

SEC. 317

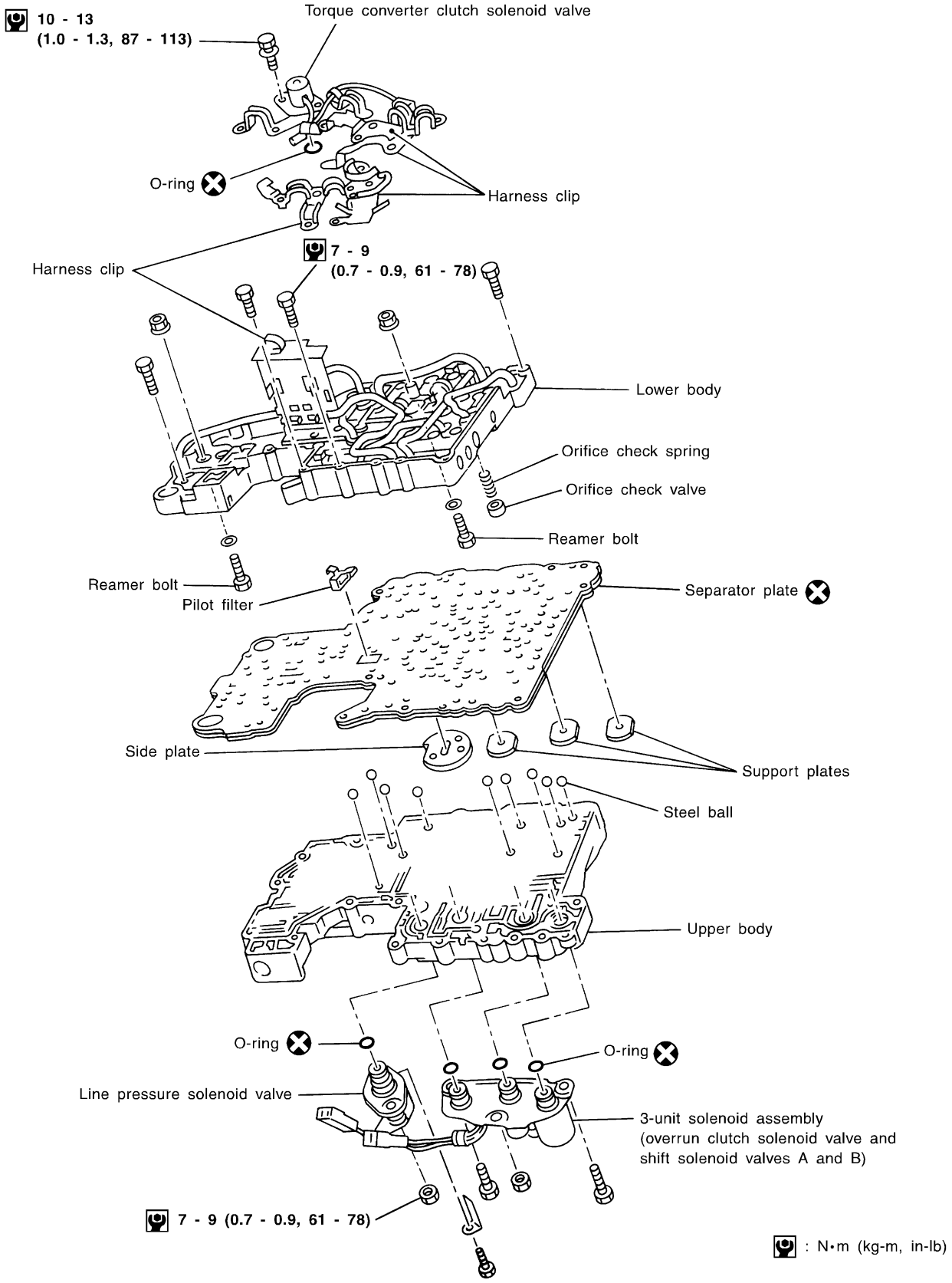

SAT156K

DISASSEMBLY

NMAT0117

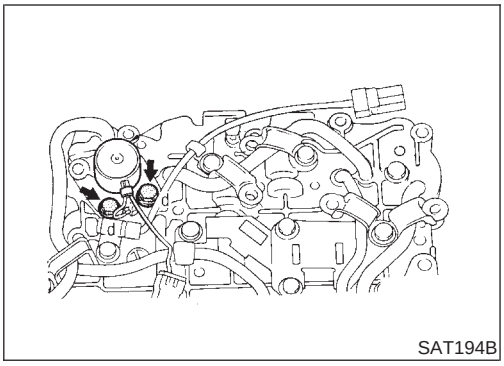
SAT194B

1. Remove solenoids.
a. Remove torque converter clutch solenoid valve and side plate from lower body.
b. Remove O-ring from solenoid.

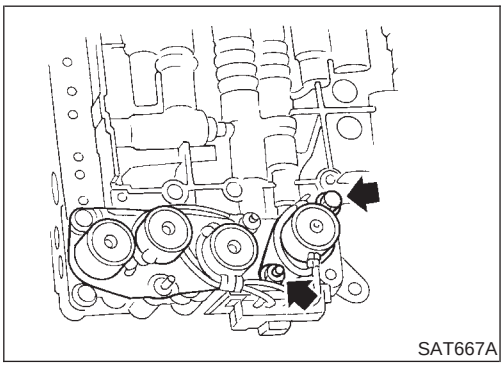
SAT667A

c. Remove line pressure solenoid valve from upper body.
d. Remove O-ring from solenoid.

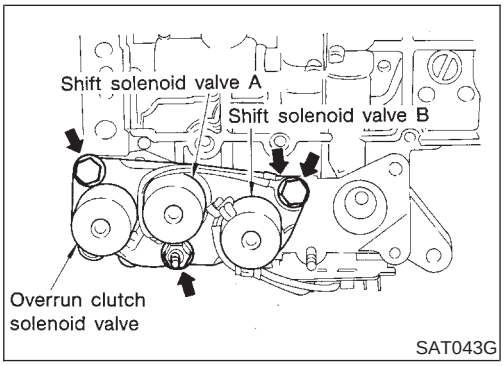

SAT043G

e. Remove 3-unit solenoid assembly from upper body.
f. Remove O-rings from solenoids.

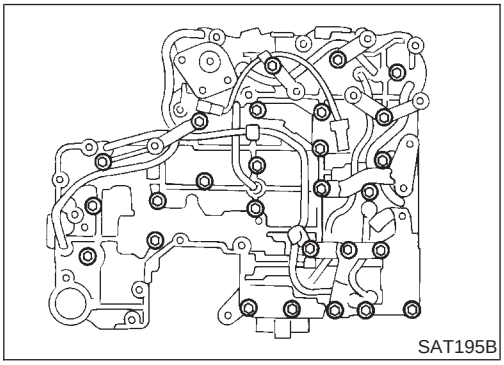
SAT195B

2. Disassemble upper and lower bodies.
a. Place upper body facedown, and remove bolts, reamer bolts and support plates.
b. Remove lower body, separator plate as a unit from upper body.
- **Be careful not to drop pilot filter, orifice check valve, spring and steel balls.**

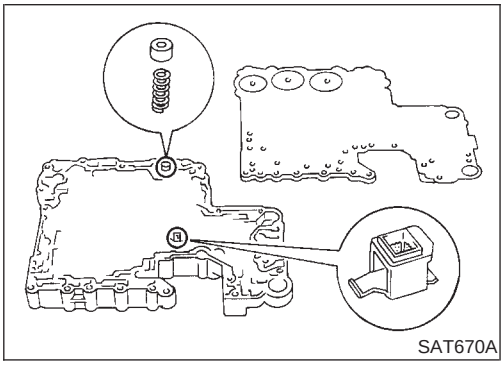
SAT670A

c. Place lower body facedown, and remove separator plate.
d. Remove pilot filter, orifice check valve and orifice check spring.

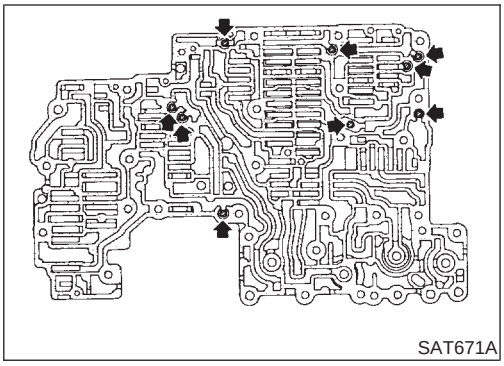
SAT671A

e. Check to see that steel balls are properly positioned in upper body. Then remove them from upper body.

INSPECTION

NMAT0118

Lower and Upper Bodies

NMAT0118S01

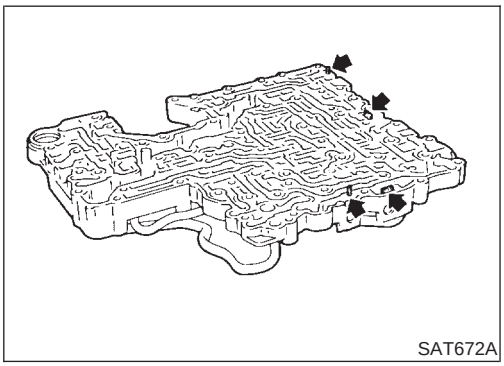
SAT672A

- Check to see that there are pins and retainer plates in lower body.

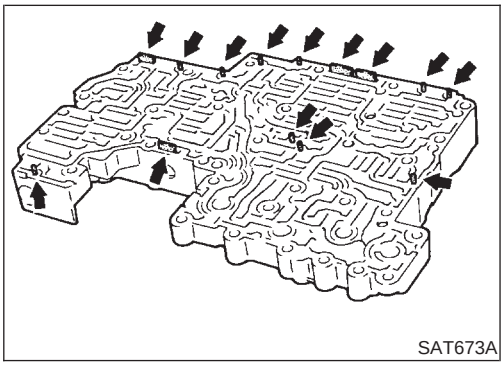
SAT673A

- Check to see that there are pins and retainer plates in upper body.
- **Be careful not to lose these parts.**

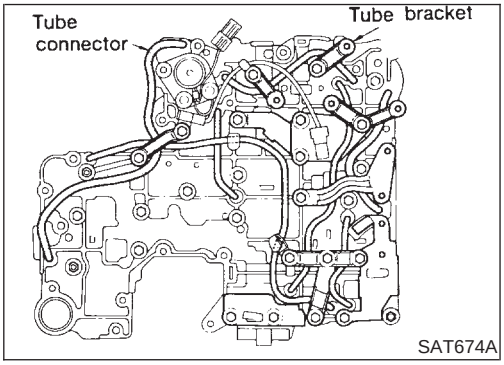

SAT674A

- Check to make sure that oil circuits are clean and free from damage.
- Check tube brackets and tube connectors for damage.

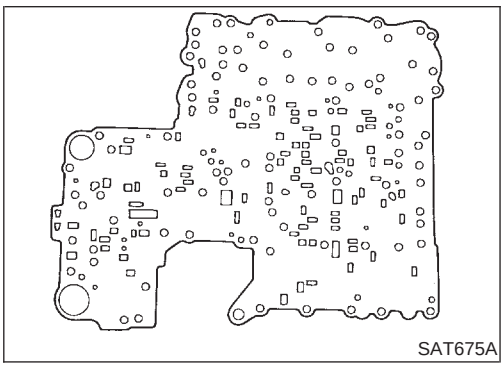
SAT675A

Separator Plate

NMAT0118S02

- Make sure that separator plate is free of damage and not deformed and oil holes are clean.

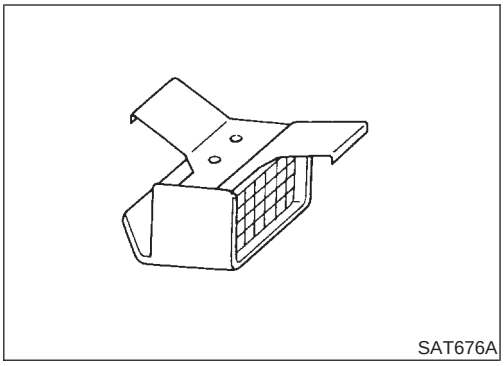
SAT676A

Pilot Filter

NMAT0118S03

- Check to make sure that filter is not clogged or damaged.

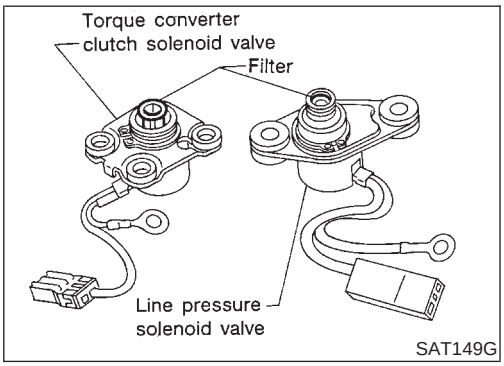

SAT149G

Torque Converter Clutch Solenoid Valve

NMAT0118S04

- Check that filter is not clogged or damaged.
- Measure resistance. Refer to "Component Inspection", AT-120.

Line Pressure Solenoid Valve

NMAT0118S05

- Check that filter is not clogged or damaged.
- Measure resistance. Refer to "Component Inspection", AT-136.

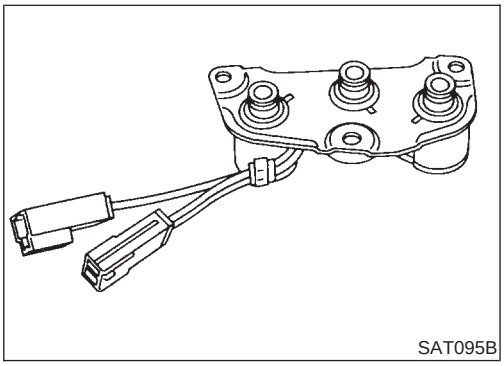
SAT095B

3-Unit Solenoid Assembly (Overrun Clutch Solenoid Valve and Shift Solenoid Valves A and B)

NMAT0118S06

- Measure resistance of each solenoid. Refer to "Component Inspection", AT-106, AT-111, AT-116.

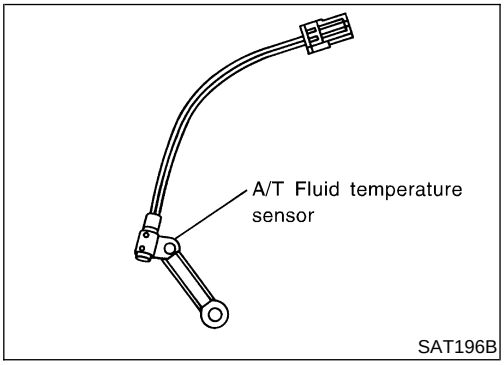

SAT196B

A/T Fluid Temperature Sensor

NMAT0118S07

- Measure resistance. Refer to "Component Inspection", AT-125.

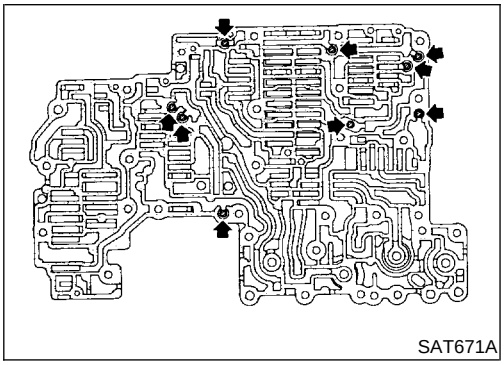
SAT671A

ASSEMBLY

NMAT0119

1. Install upper and lower bodies.

a. Place oil circuit of upper body face up. Install steel balls in their proper positions.

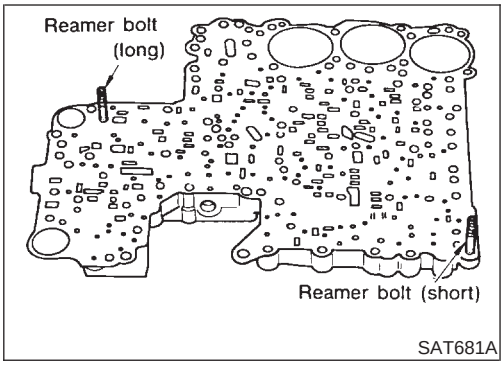

b. Install reamer bolts from bottom of upper body.

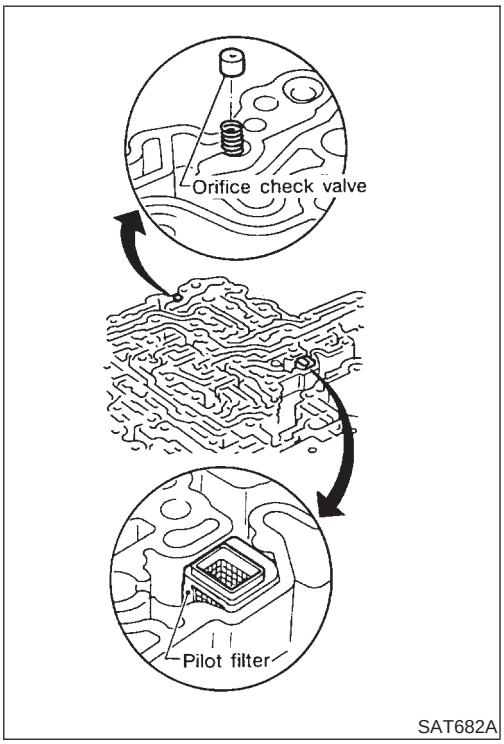

c. Place oil circuit of lower body face up. Install orifice check spring, orifice check valve and pilot filter.

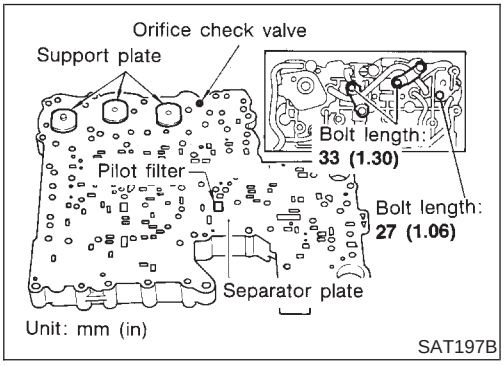

d. Install lower separator plate on lower body.

e. Install and temporarily tighten support plates, A/T fluid temperature sensor and tube brackets.

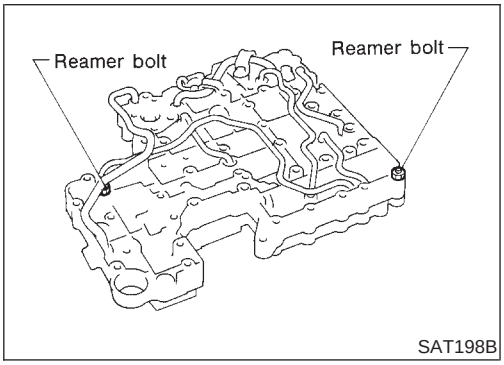

f. Temporarily assemble lower and upper bodies, using reamer bolt as a guide.

- **Be careful not to dislocate or drop steel balls, orifice check spring, orifice check valve and pilot filter.**

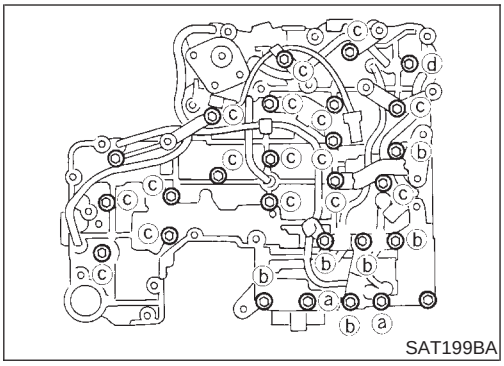

g. Install and temporarily tighten bolts and tube brackets in their proper locations.

Bolt length and location:

Bolt symbol	a	b	c	d
Bolt length mm (in)	70 (2.76)	50 (1.97)	33 (1.30)	27 (1.06)

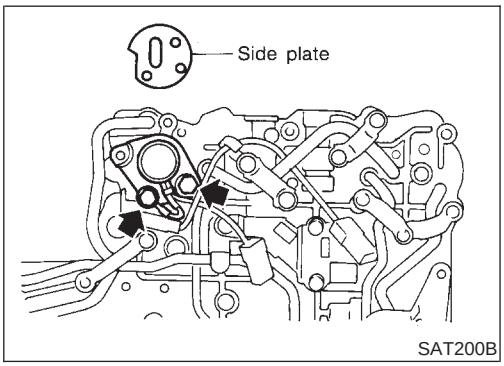

2. Install solenoids.

a. Attach O-ring and install torque converter clutch solenoid valve and side plates onto lower body.

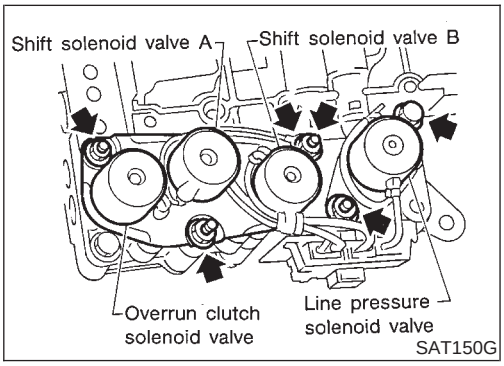

b. Attach O-rings and install 3-unit solenoids assembly onto upper body.

c. Attach O-ring and install line pressure solenoid valve onto upper body.

3. Tighten all bolts.

Control Valve Upper Body

COMPONENTS

NMAT0120

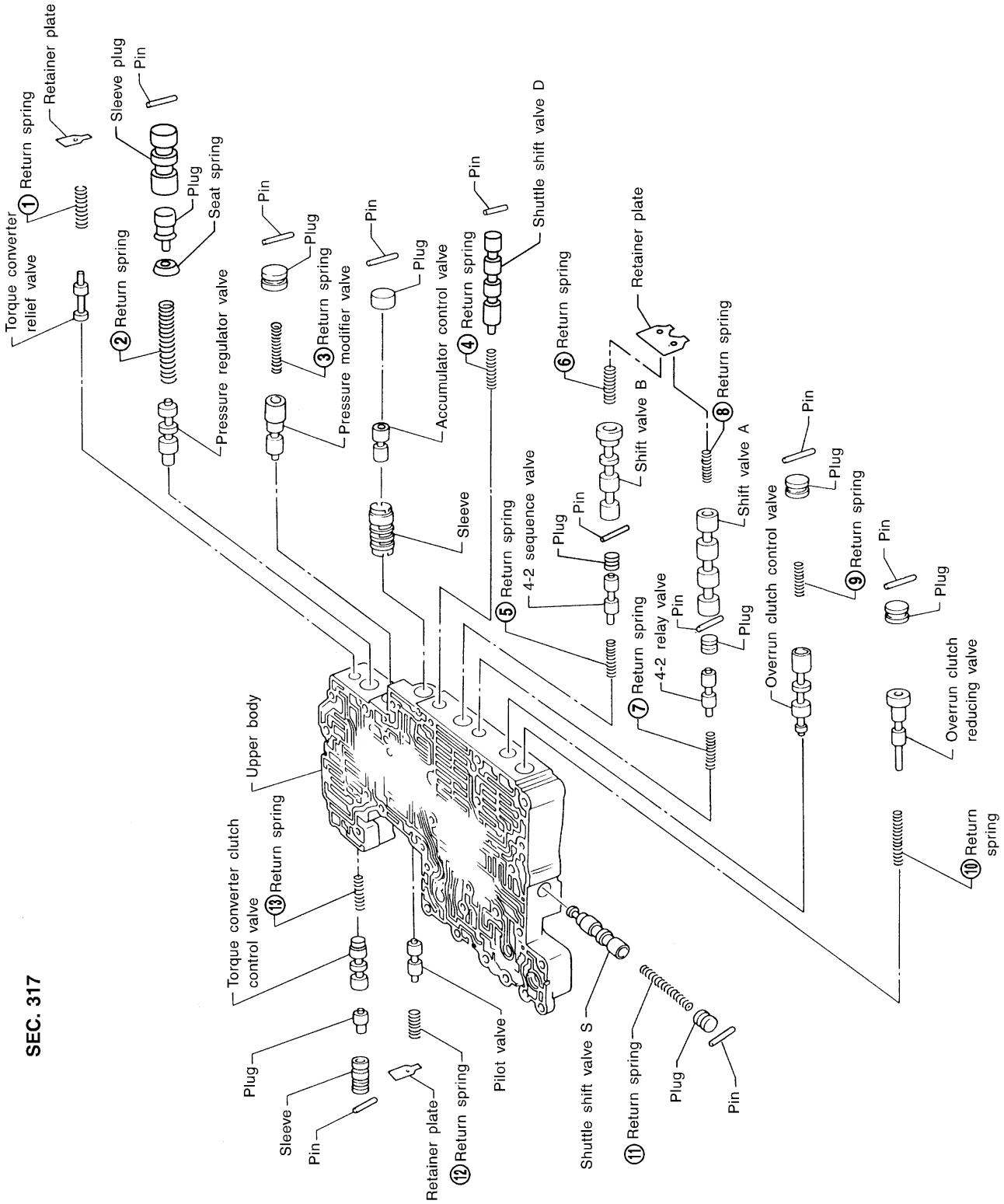

SAT142JA

Apply ATF to all components before their installation.
Numbers preceding valve springs correspond with those shown in SDS on page AT-289.

DISASSEMBLY

NMAT0121

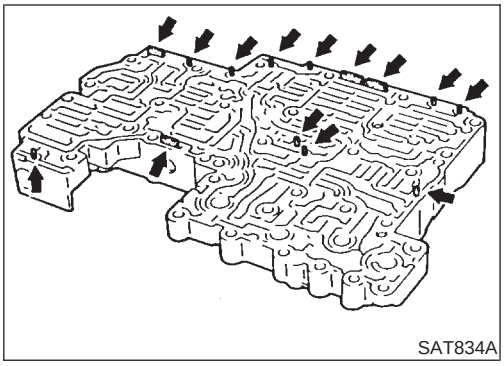
SAT834A

1. Remove valves at parallel pins.
- **Do not use a magnetic hand.**

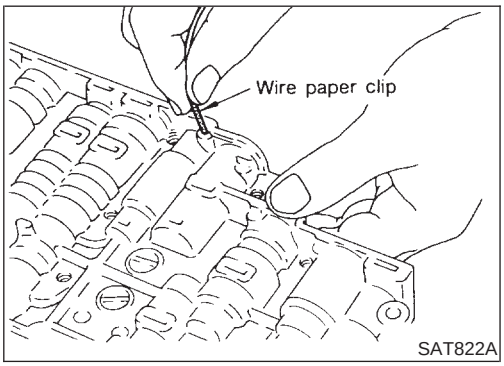

SAT822A

a. Use a wire paper clip to push out parallel pins.

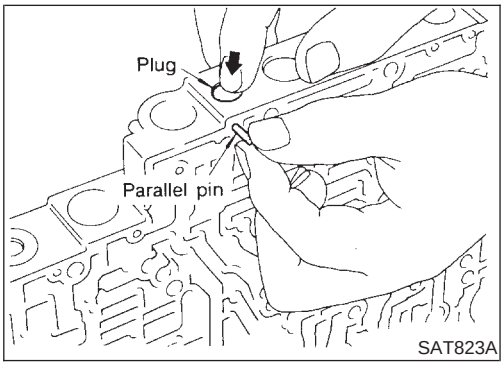

SAT823A

b. Remove parallel pins while pressing their corresponding plugs and sleeves.
- **Remove plug slowly to prevent internal parts from jumping out.**

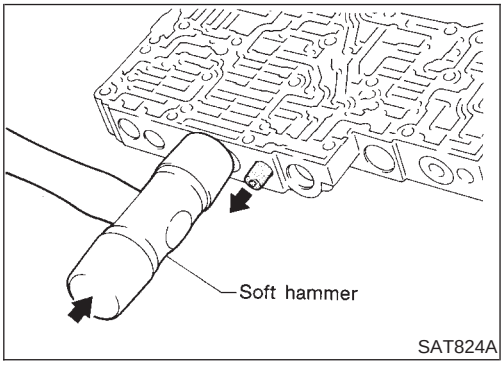

SAT824A

c. Place mating surface of valve facedown, and remove internal parts.
- **If a valve is hard to remove, place valve body facedown and lightly tap it with a soft hammer.**
- **Be careful not to drop or damage valves and sleeves.**

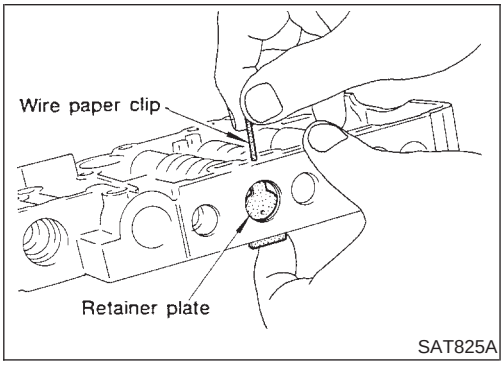

SAT825A

2. Remove valves at retainer plates.

a. Pry out retainer plate with wire paper clip.

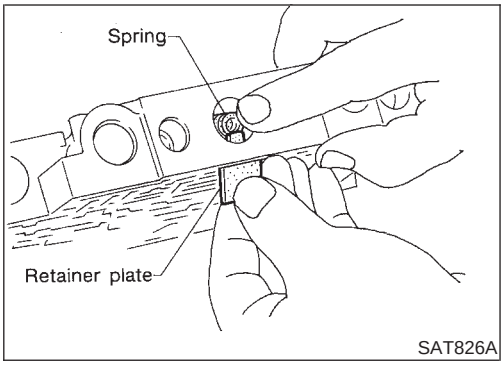

SAT826A

b. Remove retainer plates while holding spring.

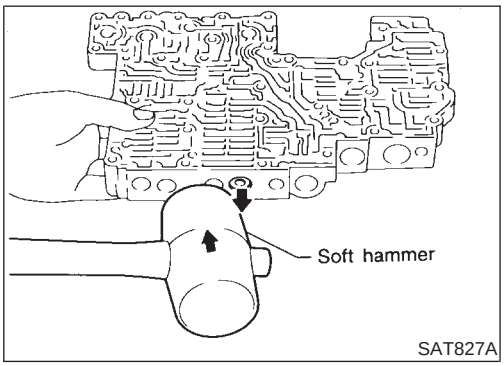

SAT827A

c. Place mating surface of valve facedown, and remove internal parts.

- **If a valve is hard to remove, lightly tap valve body with a soft hammer.**
- **Be careful not to drop or damage valves, sleeves, etc.**

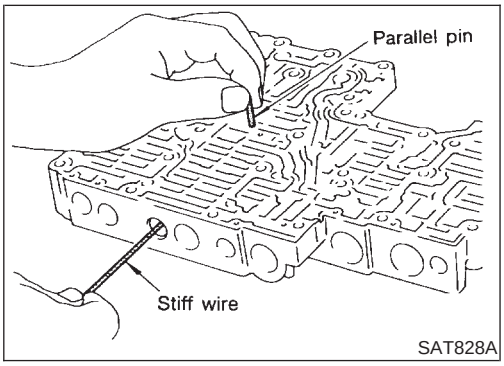

SAT828A

- 4-2 sequence valve and relay valve are located far back in upper body. If they are hard to remove, carefully push them out using stiff wire.
- **Be careful not to scratch sliding surface of valve with wire.**

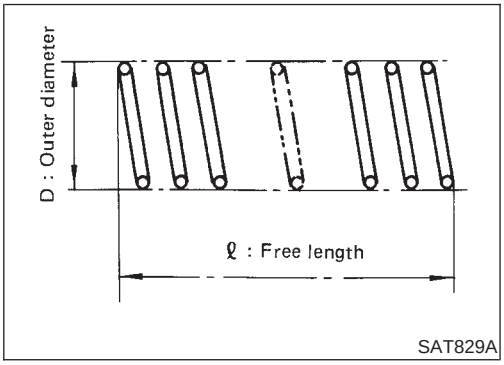

SAT829A

INSPECTION

NMAT0122

Valve Springs

NMAT0122S01

- Measure free length and outer diameter of each valve spring. Also check for damage or deformation.

  Inspection standard:

  Refer to SDS, AT-289.

- Replace valve springs if deformed or fatigued.

Control Valves

NMAT0122S02

- Check sliding surfaces of valves, sleeves and plugs.

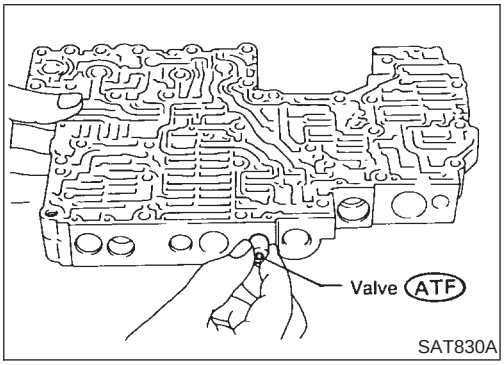

SAT830A

ASSEMBLY

NMAT0123

1. Lubricate the control valve body and all valves with ATF. Install control valves by sliding them carefully into their bores.

- **Be careful not to scratch or damage valve body.**

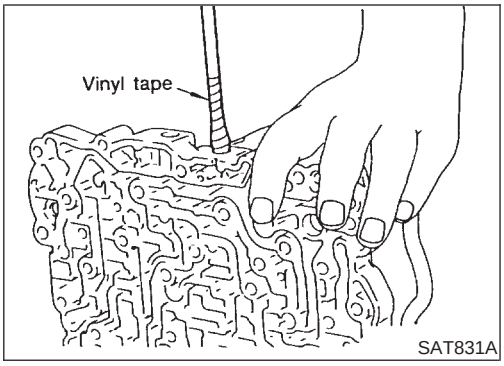

- Wrap a small screwdriver with vinyl tape and use it to insert the valves into proper position.

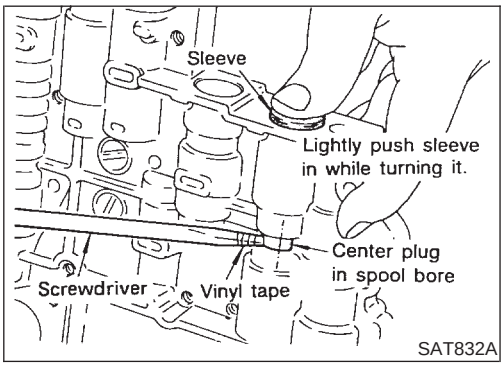

Pressure regulator valve

- If pressure regulator plug is not centered properly, sleeve cannot be inserted into bore in upper body. If this happens, use vinyl tape wrapped screwdriver to center sleeve until it can be inserted.
- Turn sleeve slightly while installing.

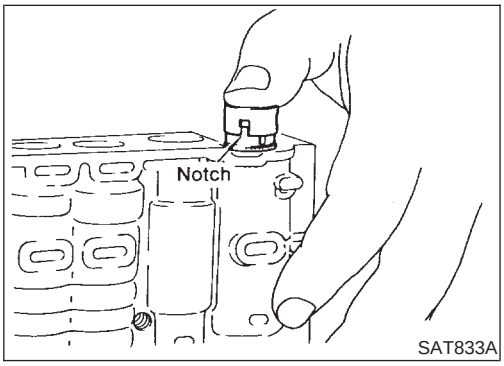

Accumulator control plug

- Align protrusion of accumulator control sleeve with notch in plug.
- Align parallel pin groove in plug with parallel pin, and install accumulator control valve.

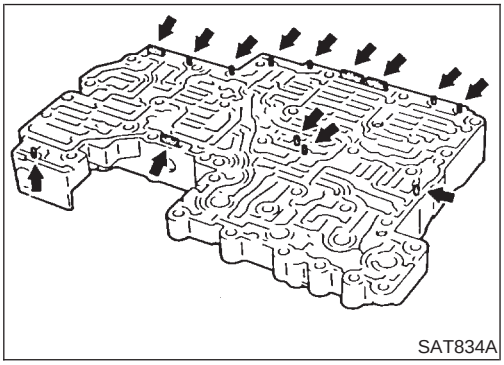

2. Install parallel pins and retainer plates.

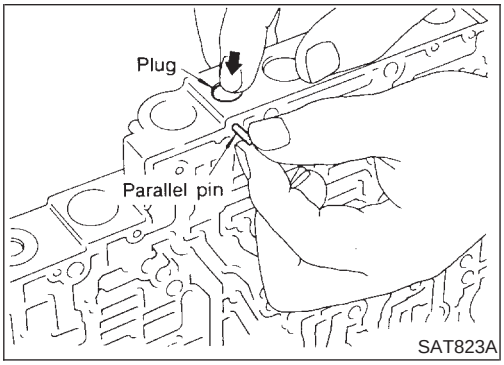

- **While pushing plug, install parallel pin.**

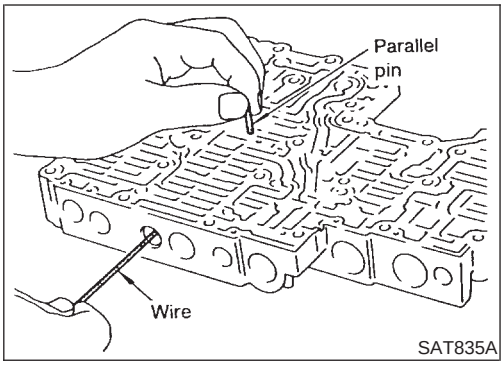

4-2 sequence valve and relay valve

- Push 4-2 sequence valve and relay valve with wire wrapped in vinyl tape to prevent scratching valve body. Install parallel pins.

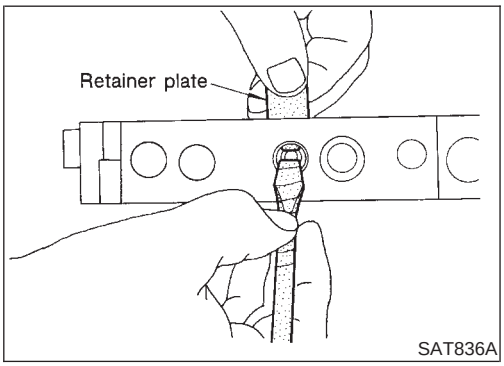

- Insert retainer plate while pushing spring.

Control Valve Lower Body

COMPONENTS

NMAT0124

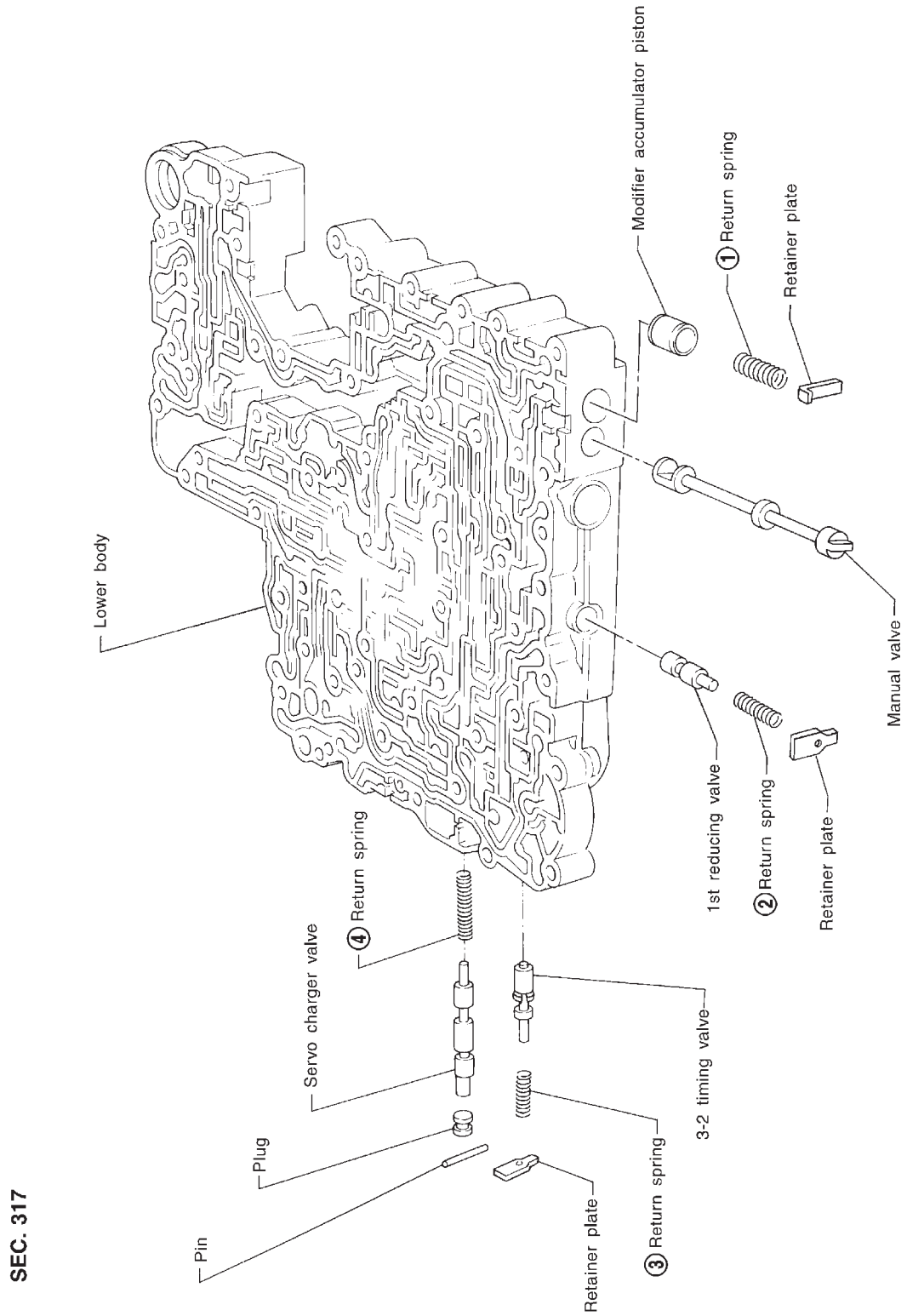

SAT966I

Apply ATF to all components before their installation.
Numbers preceding valve springs correspond with those shown in SDS on page AT-289.

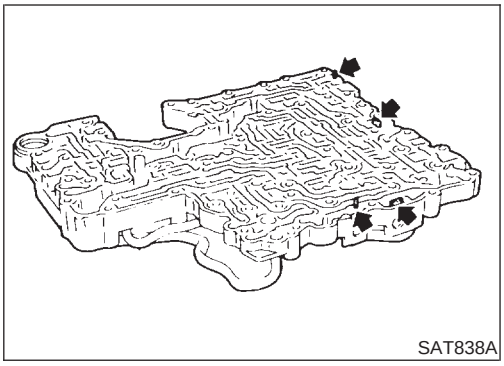
SAT838A

DISASSEMBLY

NMAT0125

1. Remove valves at parallel pins.
2. Remove valves at retainer plates.
   For removal procedures, refer to "DISASSEMBLY" of Control Valve Upper Body.

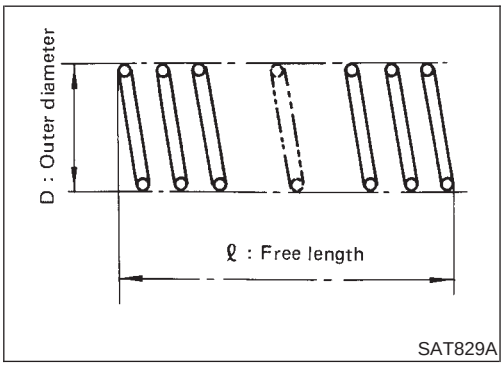

SAT829A

INSPECTION

NMAT0126

Valve Springs

NMAT0126S01

- Check each valve spring for damage or deformation. Also measure free length and outer diameter.

  Inspection standard:

  Refer to SDS, AT-289.

- Replace valve springs if deformed or fatigued.

Control Valves

NMAT0126S02

- Check sliding surfaces of control valves, sleeves and plugs for damage.

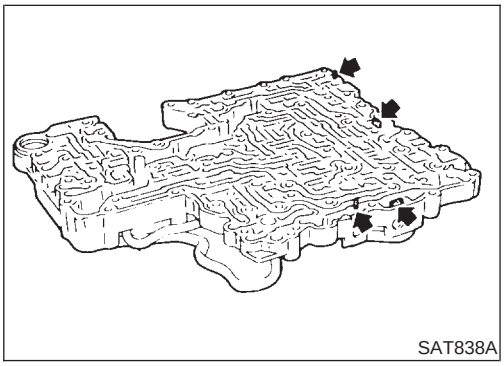
SAT838A

ASSEMBLY

NMAT0127

- Install control valves.
  For installation procedures, refer to "ASSEMBLY" of Control Valve Upper Body, AT-238.

Reverse Clutch

COMPONENTS

NMAT0128

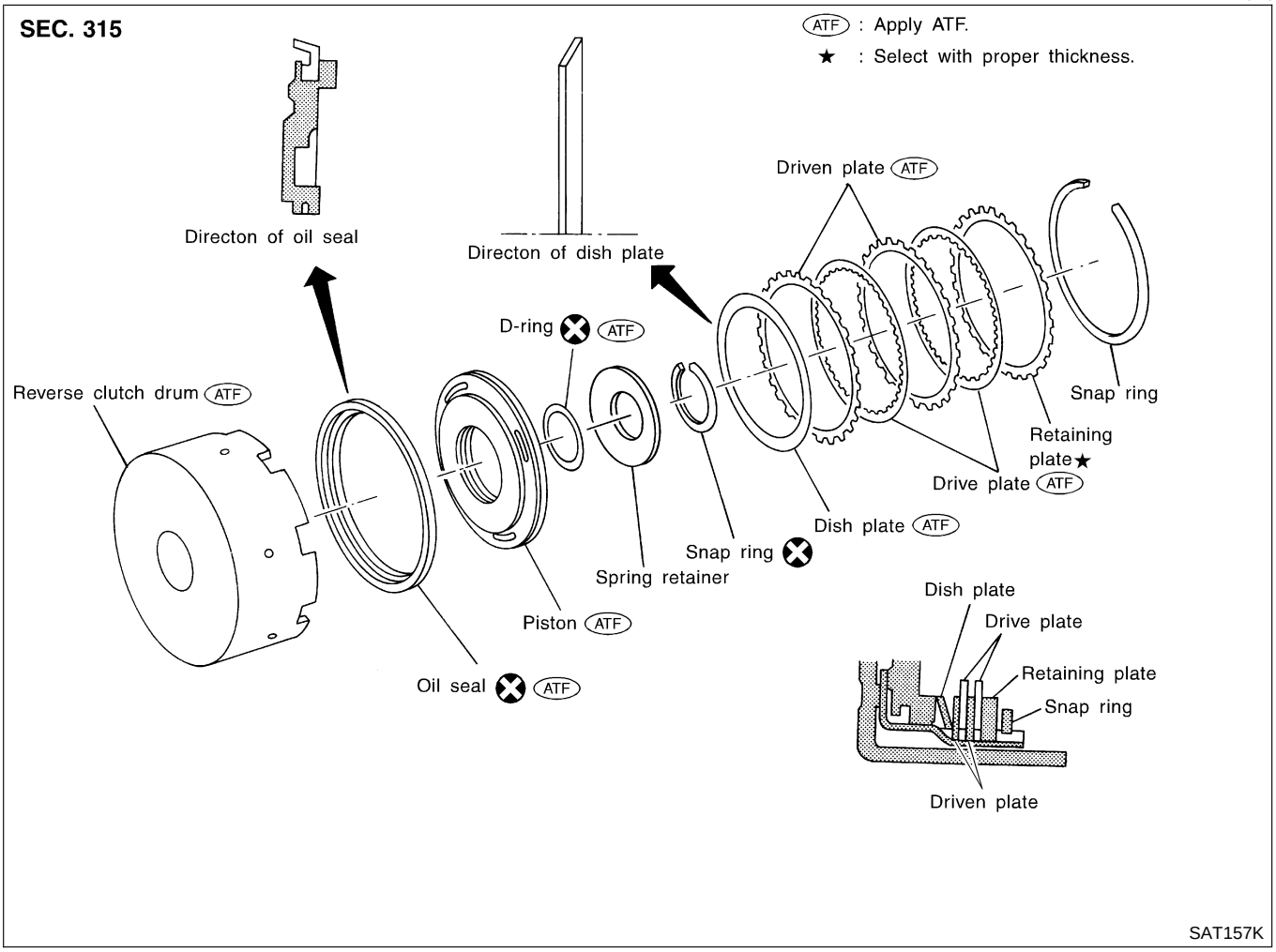

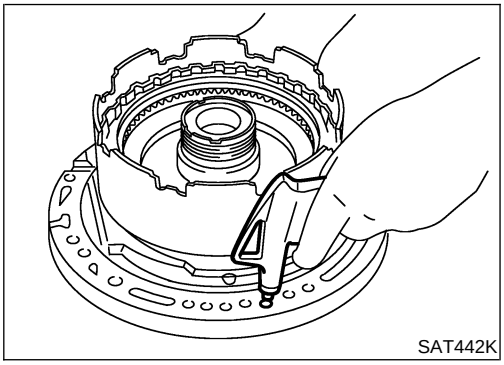

DISASSEMBLY

NMAT0129

1. Check operation of reverse clutch.

a. Install seal ring onto oil pump cover and install reverse clutch. Apply compressed air to oil hole.

b. Check to see that retaining plate moves to snap ring.

c. If retaining plate does not contact snap ring,

- D-ring might be damaged.
- Oil seal might be damaged.
- Fluid might be leaking past piston check ball.

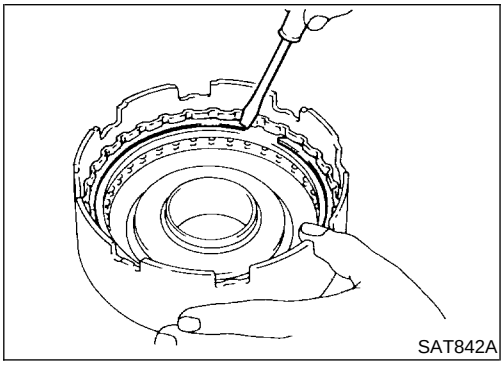

2. Remove drive plates, driven plates, retaining plate, dish plate and snap ring.

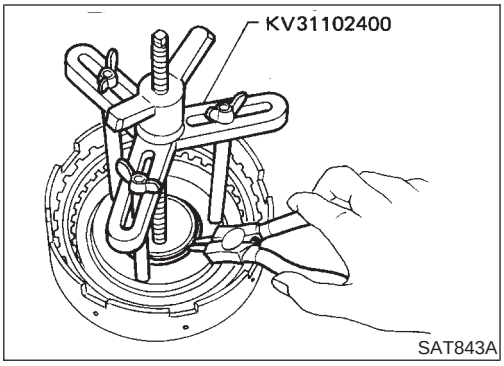

3. Remove snap ring from clutch drum while compressing clutch springs.
- **Do not expand snap ring excessively.**
4. Remove spring retainer and return spring.

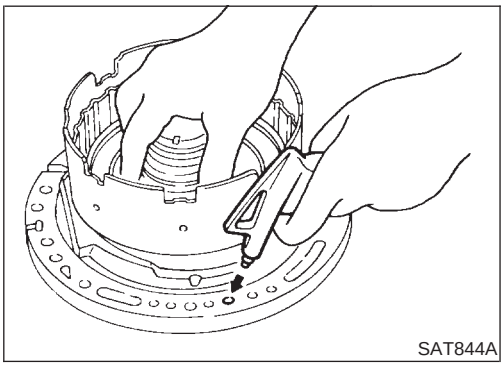

5. Install seal ring onto oil pump cover and install reverse clutch drum. While holding piston, gradually apply compressed air to oil hole until piston is removed.
- **Do not apply compressed air abruptly.**
6. Remove D-ring and oil seal from piston.

INSPECTION

NMAT0130

Reverse Clutch Snap Ring and Spring Retainer

NMAT0130S01

- Check for deformation, fatigue or damage.

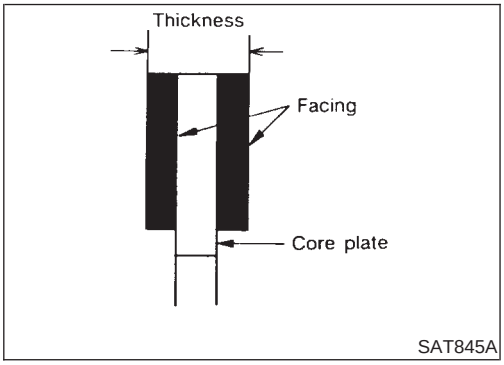

Reverse Clutch Drive Plates

NMAT0130S03

- Check facing for burns, cracks or damage.
- Measure thickness of facing.

  Thickness of drive plate:

  Standard value: 1.90 - 2.05 mm (0.0748 - 0.0807 in)

  Wear limit: 1.80 mm (0.0709 in)
- If not within wear limit, replace.

Reverse Clutch Dish Plate

NMAT0130S04

- Check for deformation or damage.

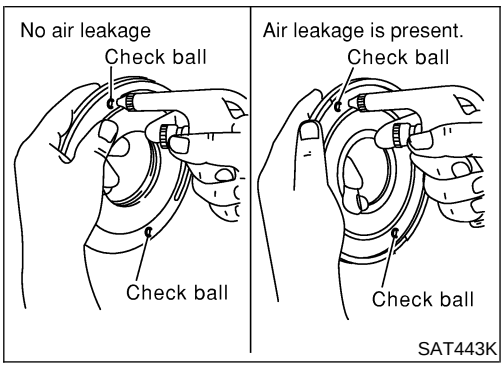

Reverse Clutch Piston

NMAT0130S05

- Shake piston to assure that balls are not seized.
- Apply compressed air to check ball oil hole opposite the return spring. Make sure there is no air leakage.
- Also apply compressed air to oil hole on return spring side to assure that air leaks past ball.

ASSEMBLY

NMAT0131

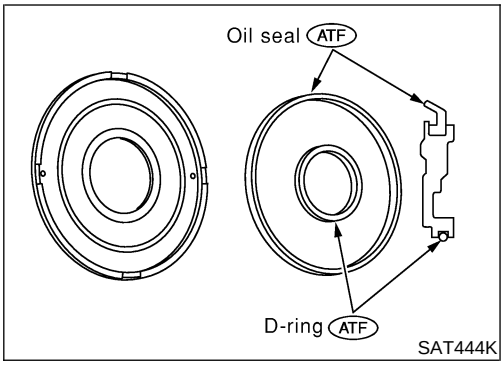

SAT444K

1. Install D-ring and oil seal on piston.
- **Apply ATF to both parts.**

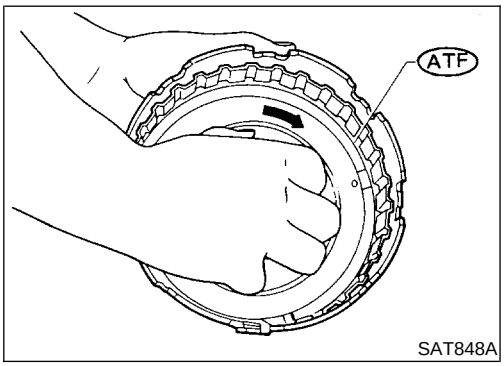

SAT848A

2. Install piston assembly by turning it slowly and evenly.
- **Apply ATF to inner surface of drum.**
3. Install spring retainer.

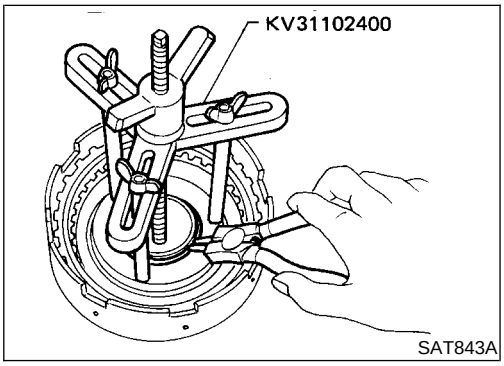

SAT843A

4. Install snap ring while compressing clutch springs.

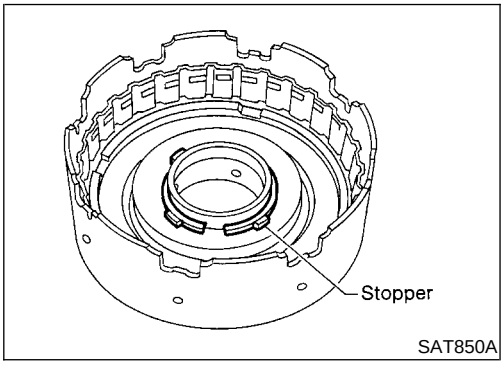

SAT850A

- **Do not align snap ring gap with spring retainer stopper.**

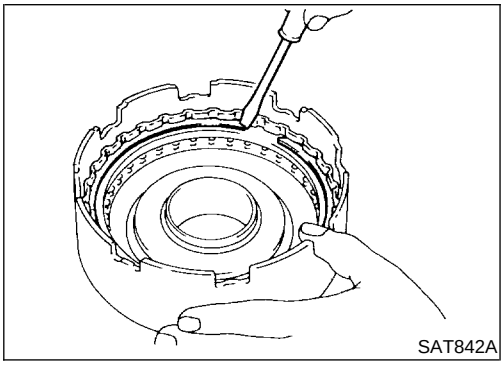
SAT842A

5. Install drive plates, driven plates, retaining plate and dish plate.
6. Install snap ring.

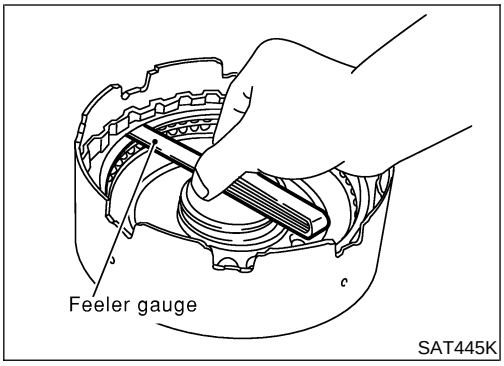

7. Measure clearance between retaining plate and snap ring. If not within allowable limit, select proper retaining plate.
   Specified clearance:
   Standard
   0.5 - 0.8 mm (0.020 - 0.031 in)
   Allowable limit
   1.2 mm (0.047 in)
   Retaining plate:
   Refer to SDS, AT-290.

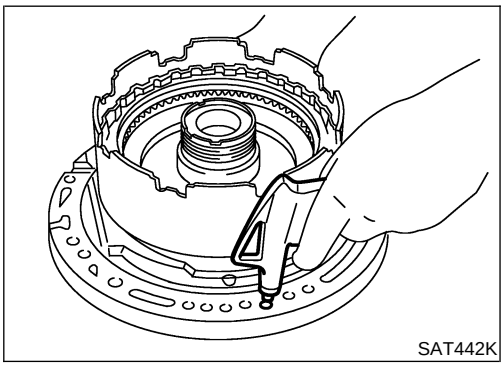

8. Check operation of reverse clutch.
   Refer to "DISASSEMBLY" of Reverse Clutch, AT-243.

High Clutch

COMPONENTS

NMAT0132

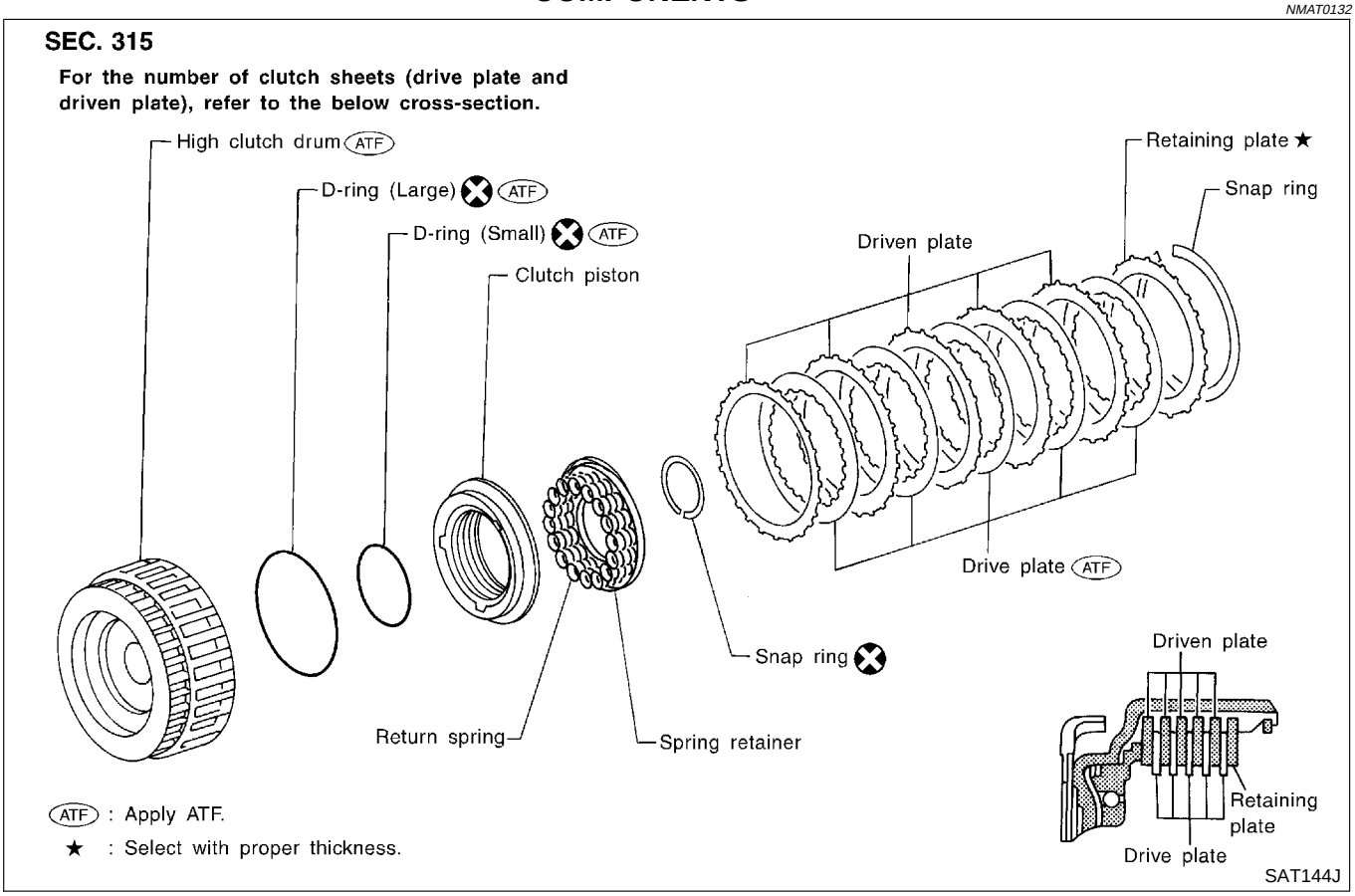

DISASSEMBLY AND ASSEMBLY

NMAT0133

Service procedures for high clutch are essentially the same as those for reverse clutch, with the following exception:

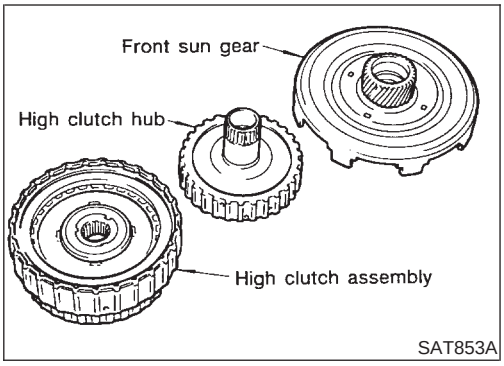

SAT853A

- Check of high clutch operation

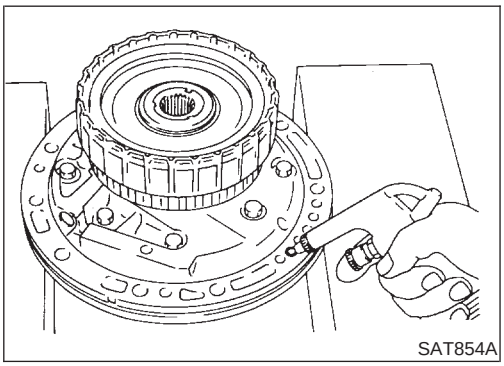

SAT854A

- Removal and installation of return spring

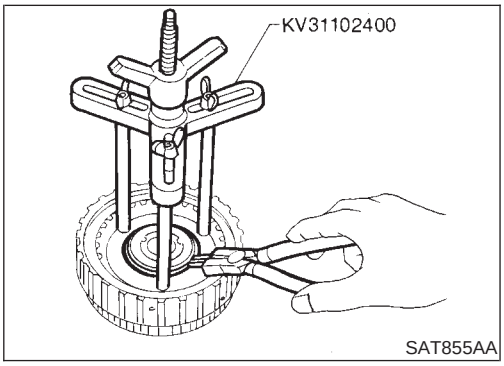

SAT855AA

- Inspection of high clutch return springs

  Inspection standard:

  Refer to SDS, AT-289.

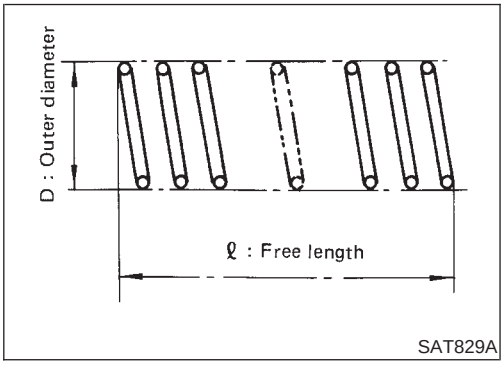

SAT829A

- Inspection of high clutch drive plate

  Thickness of drive plate:

  Standard

  1.52 - 1.67 mm (0.0598 - 0.0657 in)

  Wear limit

  1.40 mm (0.0551 in)

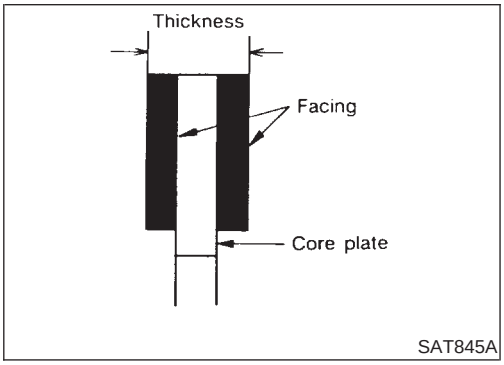

SAT845A

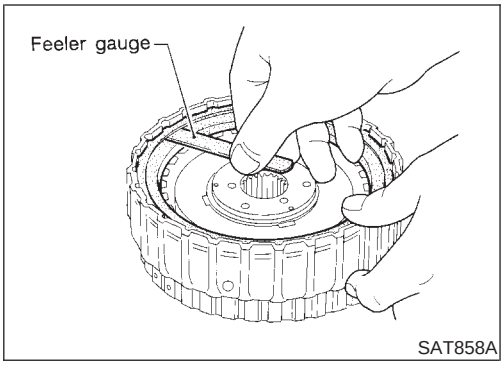

- Measurement of clearance between retaining plate and snap ring

  Specified clearance:

  Standard

  1.8 - 2.2 mm (0.071 - 0.087 in)

  Allowable limit

  3.2 mm (0.126 in)

  Retaining plate:

  Refer to SDS, AT-290.

Forward and Overrun Clutches

COMPONENTS

NMAT0134

SEC. 315

For the number of clutch sheets (drive plate and driven plate), refer to the below cross-section.

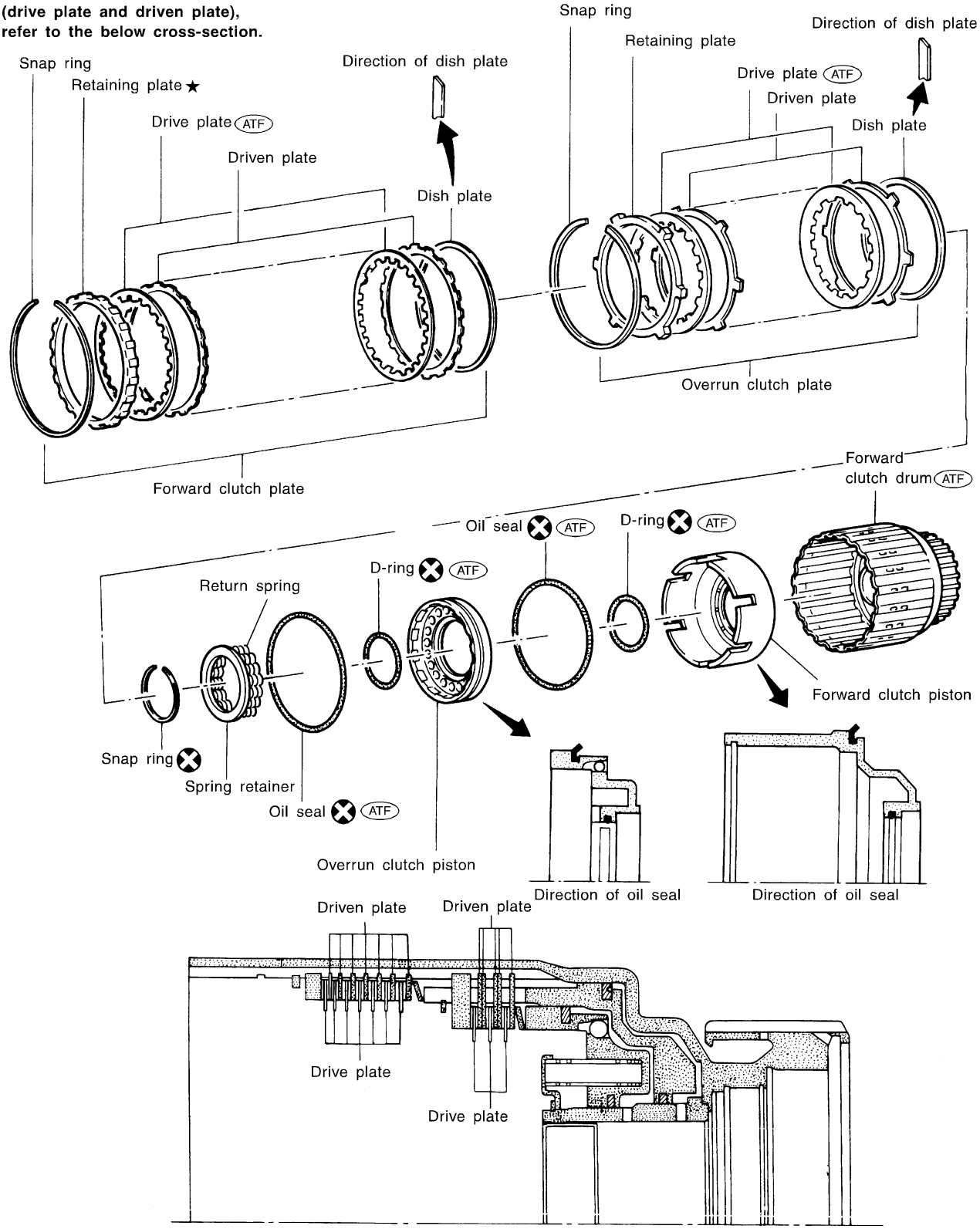

(ATF) : Apply ATF.

★ : Select with proper thickness.

SAT454K

DISASSEMBLY AND ASSEMBLY

NMAT0135

Forward and overrun clutches are serviced essentially the same way as reverse clutch is serviced. However, note the following exceptions.

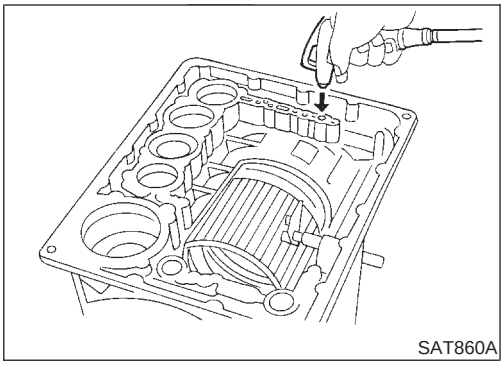
SAT860A

- Check of forward clutch operation

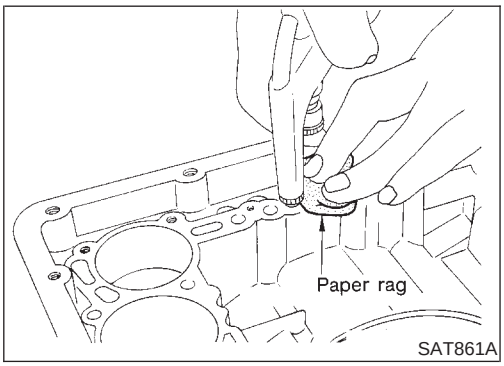

SAT861A

- Check of overrun clutch operation

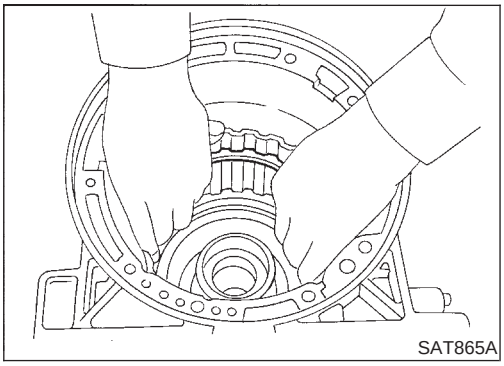
SAT865A

- Removal of forward clutch drum
  Remove forward clutch drum from transmission case by holding snap ring.

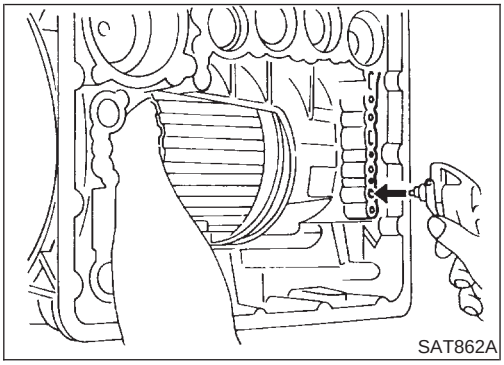
SAT862A

- Removal of forward clutch and overrun clutch pistons

a) While holding overrun clutch piston, gradually apply compressed air to oil hole.

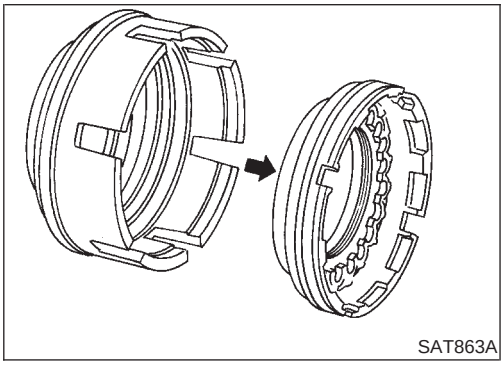
SAT863A

b) Remove overrun clutch from forward clutch.

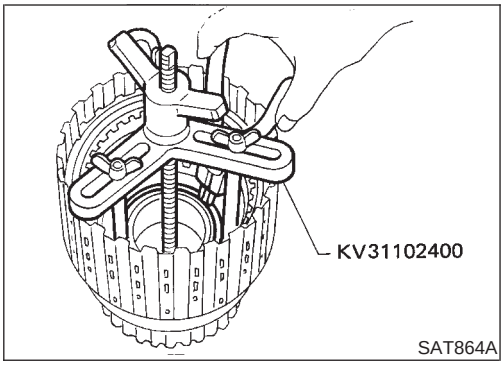

SAT864A

- Removal and installation of return springs

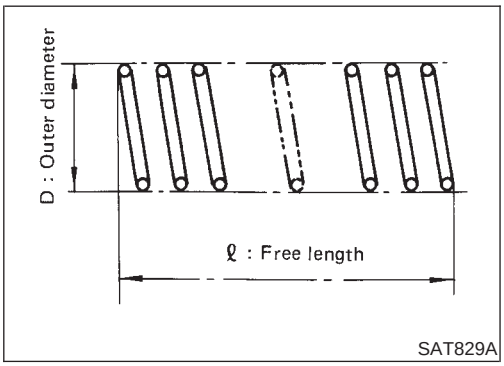

SAT829A

- Inspection of forward clutch and overrun clutch return springs

  Inspection standard:

  Refer to SDS, AT-289.

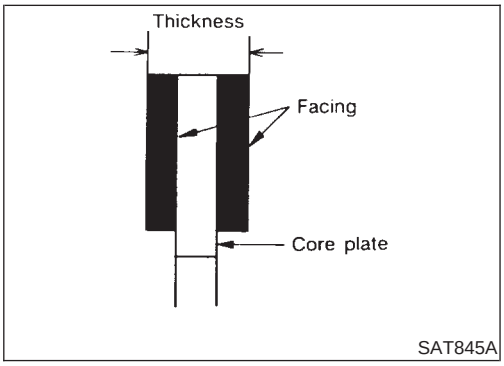

SAT845A

- Inspection of forward clutch drive plates

  Thickness of drive plate:

  Standard

  1.52 - 1.67 mm (0.0598 - 0.0657 in)

  Wear limit

  1.40 mm (0.0551 in)

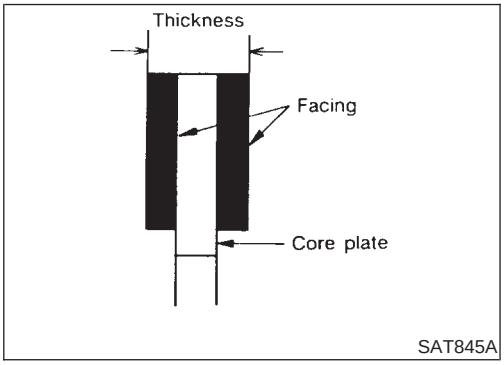

SAT845A

- Inspection of overrun clutch drive plates

  Thickness of drive plate:

  Standard

  1.90 - 2.05 mm (0.0748 - 0.0807 in)

  Wear limit

  1.80 mm (0.0709 in)

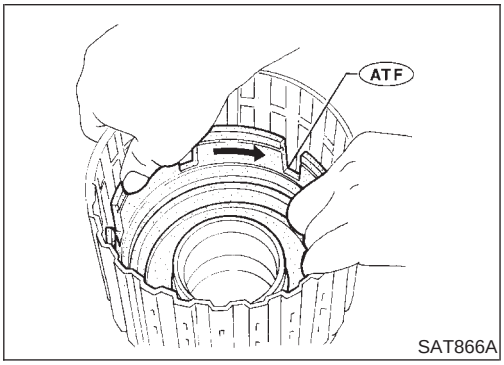

SAT866A

- Installation of forward clutch piston and overrun clutch piston

a) Install forward clutch piston by turning it slowly and evenly.

- **Apply ATF to inner surface of clutch drum.**

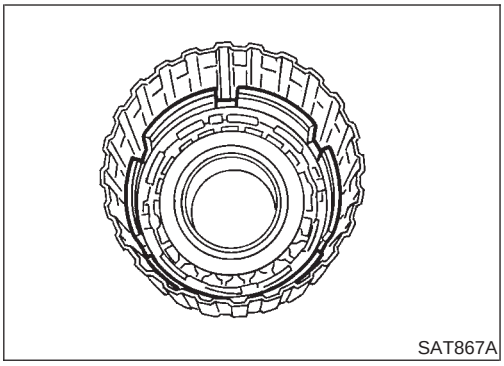
SAT867A

- **Align notch in forward clutch piston with groove in forward clutch drum.**

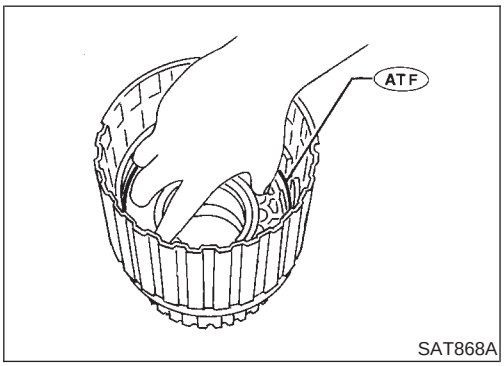

SAT868A

b) Install overrun clutch by turning it slowly and evenly.

- **Apply ATF to inner surface of forward clutch piston.**

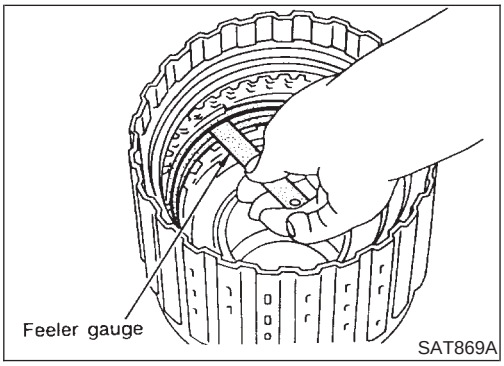

SAT869A

- Measurement of clearance between retaining plate and snap ring of overrun clutch

  Specified clearance:
  Standard
  1.0 - 1.4 mm (0.039 - 0.055 in)
  Allowable limit
  2.0 mm (0.079 in)
  Retaining plate:
  Refer to SDS, AT-291.

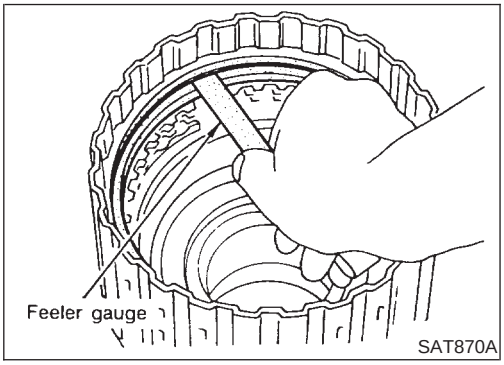

SAT870A

- Measurement of clearance between retaining plate and snap ring of forward clutch

  Specified clearance:
  Standard
  0.35 - 0.75 mm (0.0138 - 0.0295 in)
  Allowable limit
  2.15 mm (0.0846 in)
  Retaining plate:
  Refer to SDS, AT-291.

Low & Reverse Brake

COMPONENTS

NMAT0136

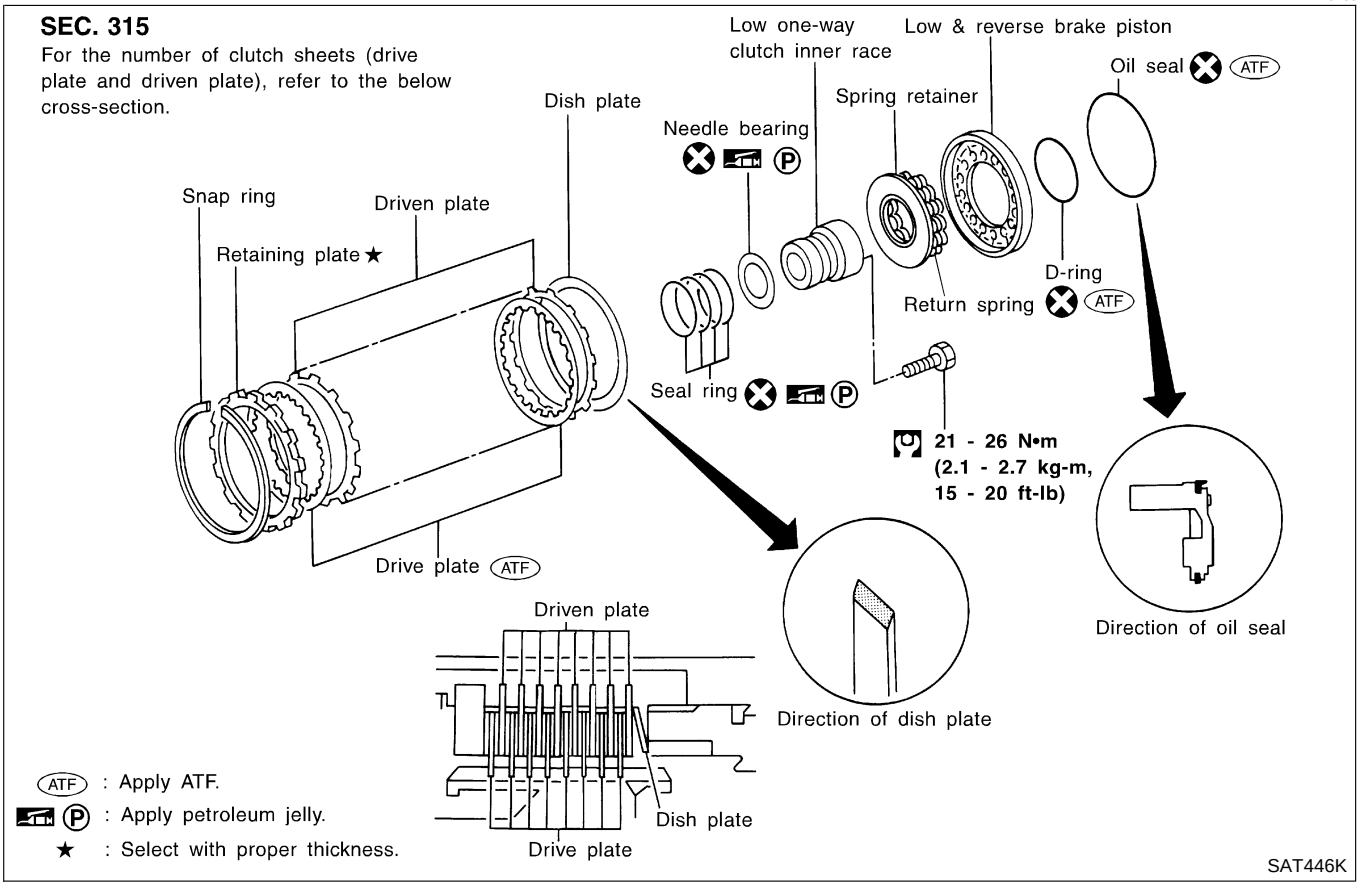

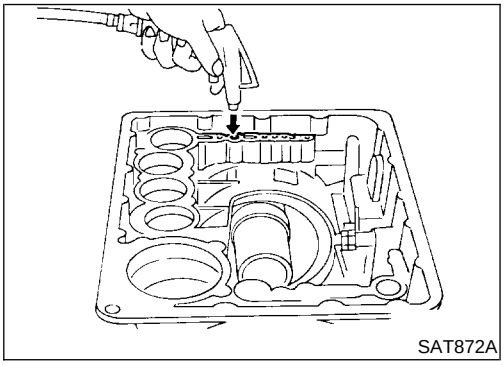

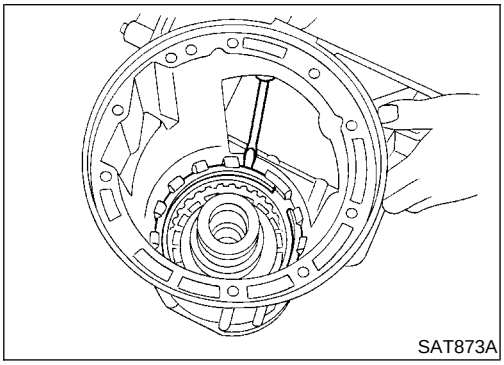

DISASSEMBLY

NMAT0137

1. Check operation of low and reverse brake.

a. Install seal ring onto oil pump cover and install reverse clutch. Apply compressed air to oil hole.

b. Check to see that retaining plate moves to snap ring.

c. If retaining plate does not contact snap ring,

- D-ring might be damaged.
- Oil seal might be damaged.
- Fluid might be leaking past piston check ball.

2. Remove snap ring, low and reverse brake drive plates, driven plates and dish plate.

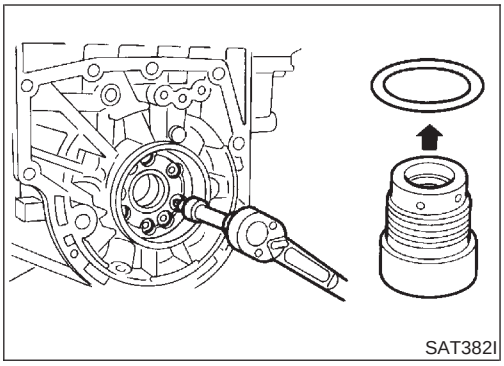
SAT382I

3. Remove low one-way clutch inner race, spring retainer and return spring from transmission case.
4. Remove seal rings from low one-way clutch inner race.
5. Remove needle bearing from low one-way clutch inner race.

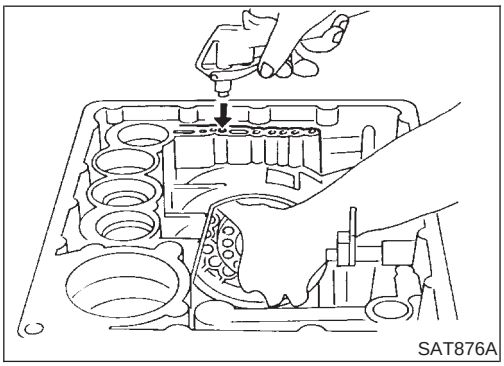
SAT876A

6. Remove low and reverse brake piston using compressed air.
7. Remove oil seal and D-ring from piston.

INSPECTION

NMAT0138

Low and Reverse Brake Snap Ring and Spring Retainer

NMAT0138S01

- Check for deformation, or damage.

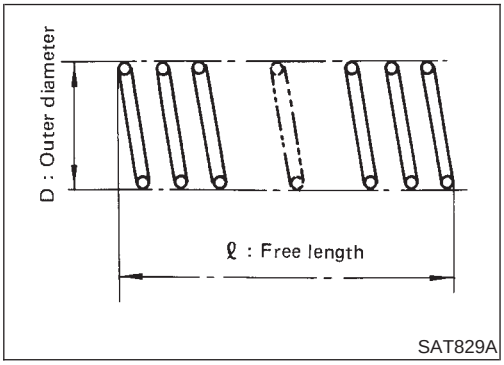

SAT829A

Low and Reverse Brake Return Springs

NMAT0138S02

- Check for deformation or damage. Also measure free length and outside diameter.

  Inspection standard:

  Refer to SDS, AT-289.

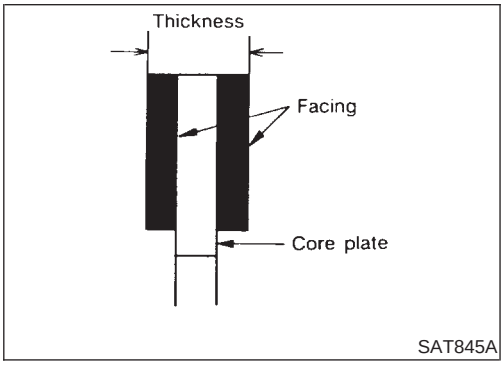

SAT845A

Low and Reverse Brake Drive Plates

NMAT0138S03

- Check facing for burns, cracks or damage.
- Measure thickness of facing.

  Thickness of drive plate:

  Standard value

  1.52 - 1.67 mm (0.0598 - 0.0657 in)

  Wear limit

  1.40 mm (0.0551 in)

- If not within wear limit, replace.

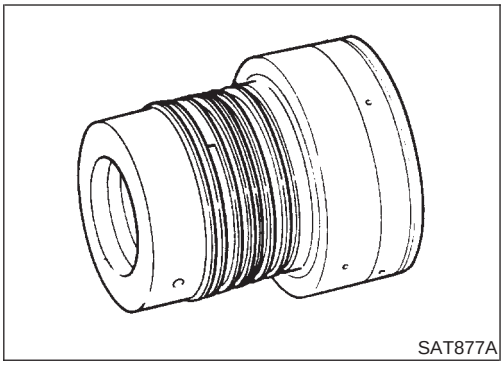
SAT877A

Low One-way Clutch Inner Race

NMAT0138S04

- Check frictional surface of inner race for wear or damage.

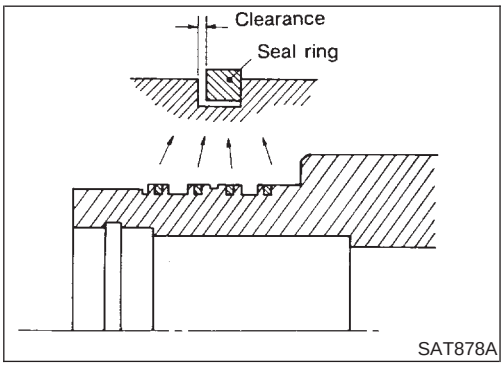

SAT878A

- Install a new seal rings onto low one-way clutch inner race.
- **Be careful not to expand seal ring gap excessively.**
- Measure seal ring-to-groove clearance.

  Inspection standard:

  Standard value: 0.10 - 0.25 mm (0.0039 - 0.0098 in)

  Allowable limit: 0.25 mm (0.0098 in)
- If not within allowable limit, replace low one-way clutch inner race.

ASSEMBLY

NMAT0139

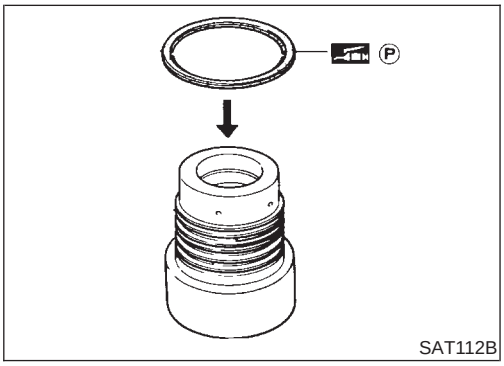

SAT112B

1. Install needle bearing onto one-way clutch inner race.
- **Pay attention to its direction — Black surface goes to rear side.**
- **Apply petroleum jelly to needle bearing.**

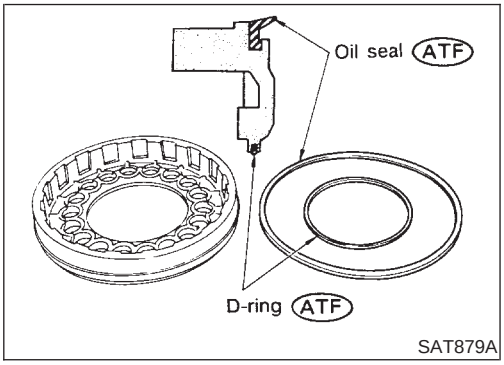

SAT879A

2. Install oil seal and D-ring onto piston.
- **Apply ATF to oil seal and D-ring.**

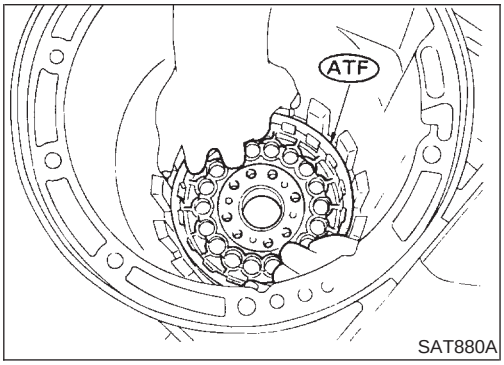

SAT880A

3. Install piston by rotating it slowly and evenly.
- **Apply ATF to inner surface of transmission case.**

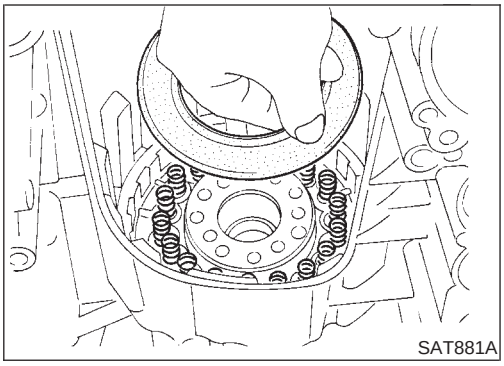

4. Install return springs, spring retainer and low one-way clutch inner race onto transmission case.
5. Install dish plate, low and reverse brake drive plates, driven plates and retaining plate.
6. Install snap ring on transmission case.

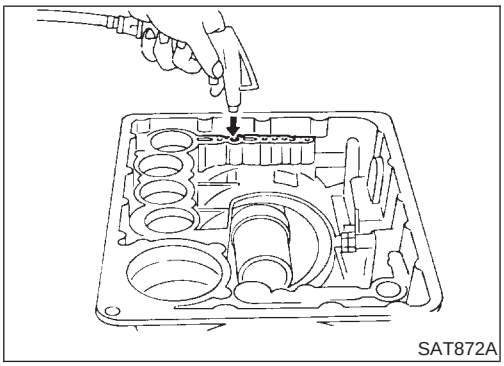

7. Check operation of low and reverse brake clutch piston. Refer to "DISASSEMBLY", AT-253.

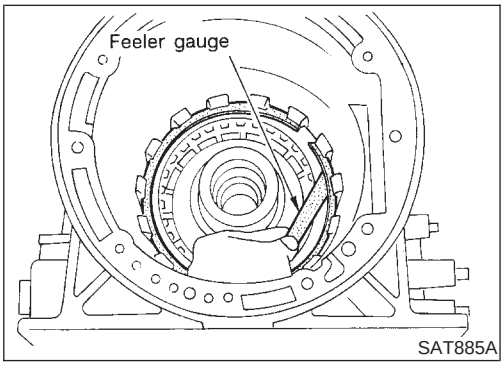

8. Measure clearance between retaining plate and snap ring. If not within allowable limit, select proper retaining plate.

   Specified clearance:
   - **Standard**
     - **0.8 - 1.1 mm (0.031 - 0.043 in)**
   - **Allowable limit**
     - **2.7 mm (0.106 in)**

   Retaining plate:
   - **Refer to SDS, AT-292.**

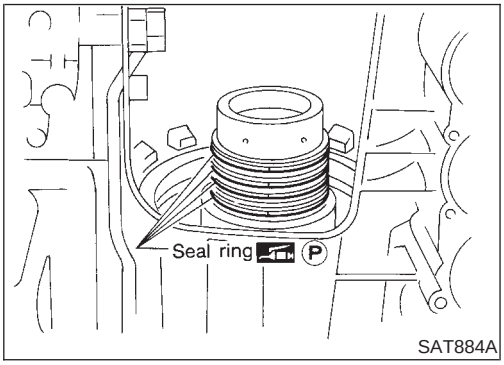

9. Install low one-way clutch inner race seal ring.

- **Apply petroleum jelly to seal ring.**
- **Make sure seal rings are pressed firmly into place and held by petroleum jelly.**

Forward Clutch Drum Assembly

COMPONENTS

NMAT0140

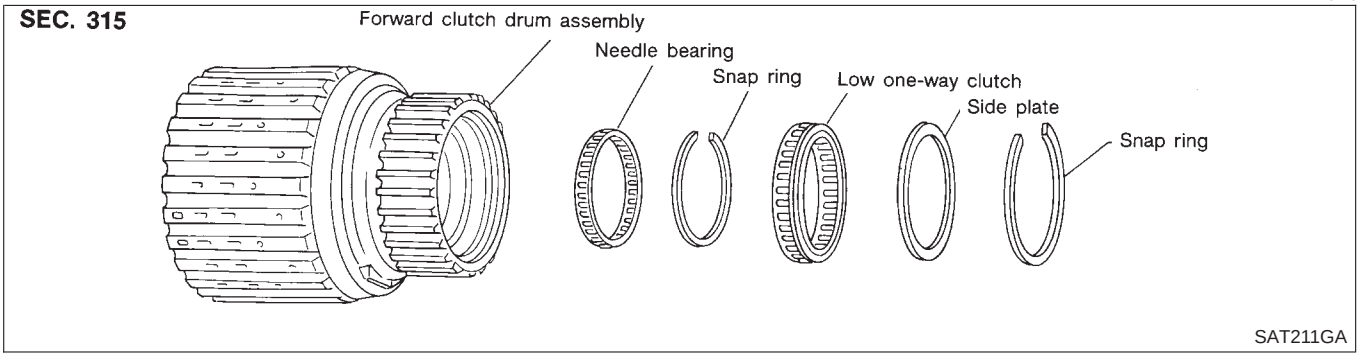

DISASSEMBLY

NMAT0141

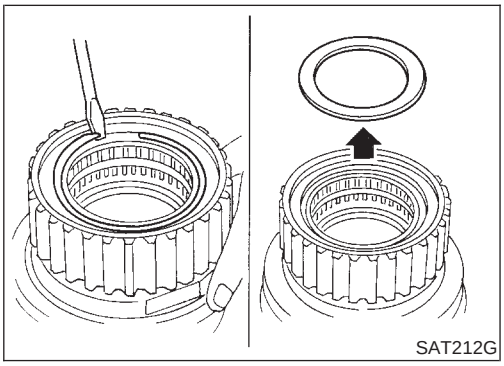

1. Remove snap ring from forward clutch drum.
2. Remove side plate from forward clutch drum.

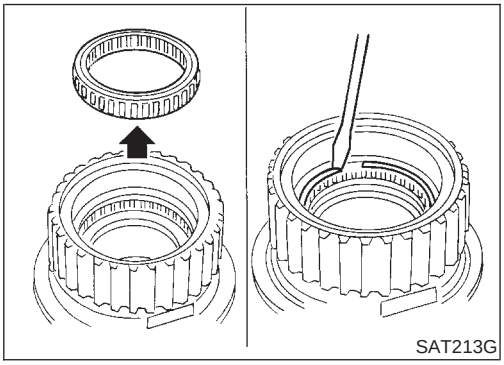

3. Remove low one-way clutch from forward clutch drum.
4. Remove snap ring from forward clutch drum.

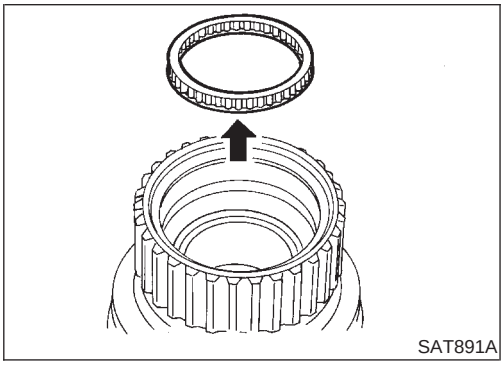

5. Remove needle bearing from forward clutch drum.

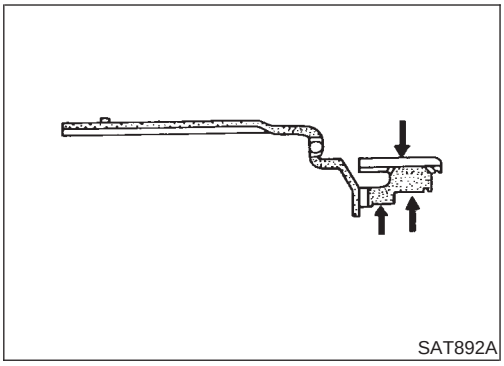
SAT892A

INSPECTION

NMAT0142

Forward Clutch Drum

NMAT0142S01

- Check spline portion for wear or damage.
- Check frictional surfaces of low one-way clutch and needle bearing for wear or damage.

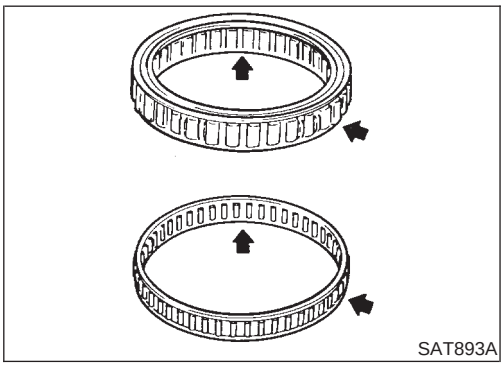
SAT893A

Needle Bearing and Low One-way Clutch

NMAT0142S02

- Check frictional surface for wear or damage.

ASSEMBLY

NMAT0143

1. Install needle bearing in forward clutch drum.
2. Install snap ring onto forward clutch drum.

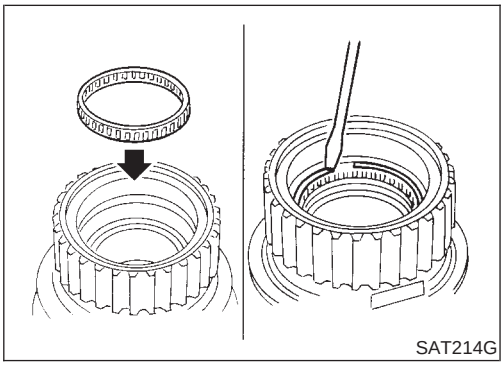
SAT214G

3. Install low one-way clutch onto forward clutch drum by pushing the roller in evenly.

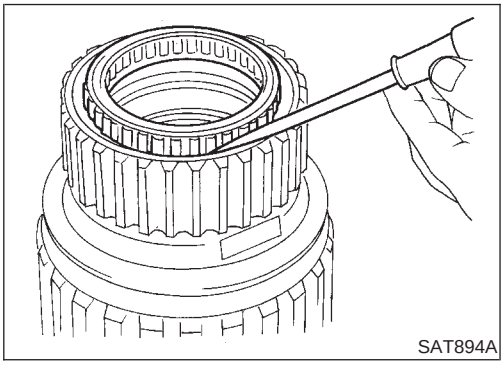
SAT894A

- **Install low one-way clutch with flange facing rearward.**

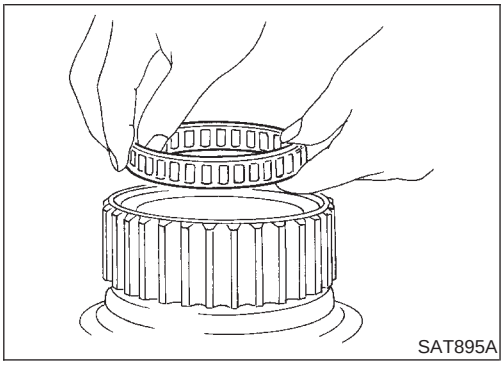
SAT895A

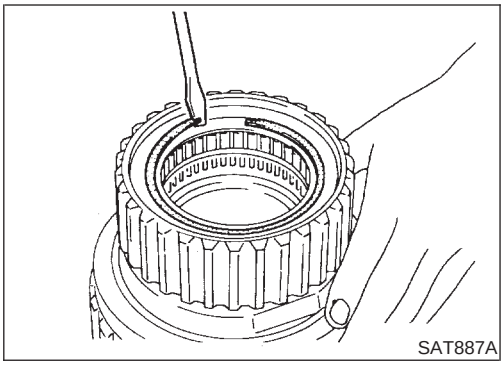
SAT887A

4. Install side plate onto forward clutch drum.
5. Install snap ring onto forward clutch drum.

Rear Internal Gear and Forward Clutch Hub

COMPONENTS

NMAT0144

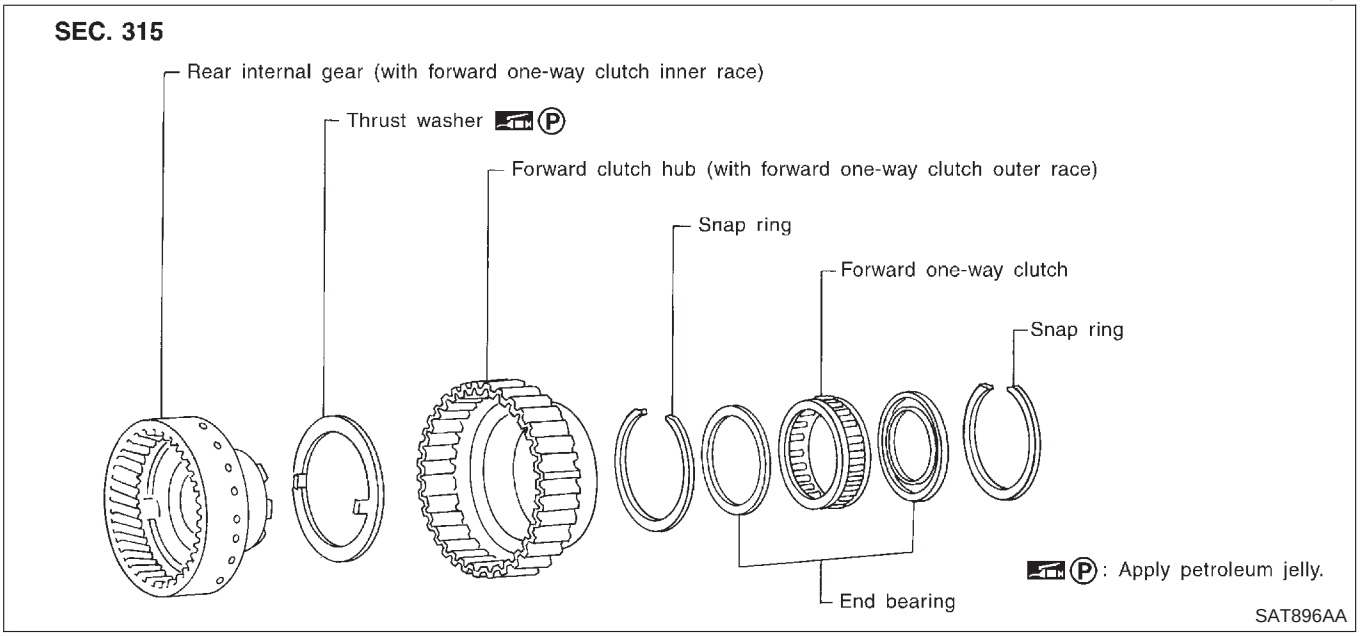

DISASSEMBLY

NMAT0145

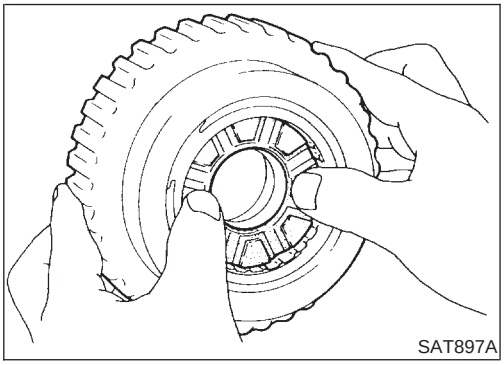
SAT897A

1. Remove rear internal gear by pushing forward clutch hub forward.

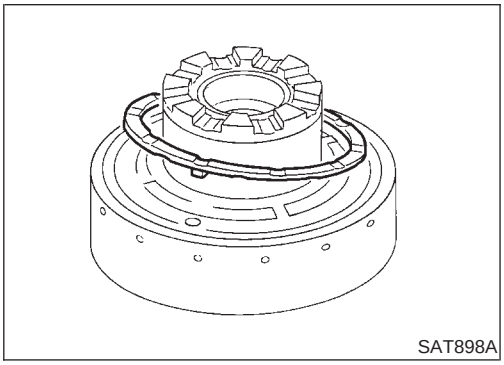
SAT898A

2. Remove thrust washer from rear internal gear.

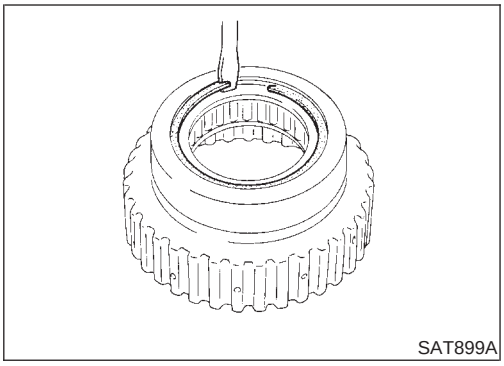
SAT899A

3. Remove snap ring from forward clutch hub.

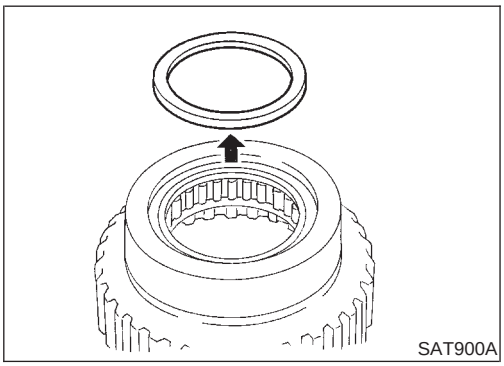
SAT900A

4. Remove end bearing.

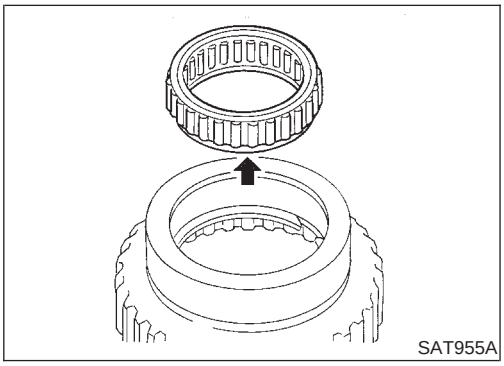
SAT955A

5. Remove forward one-way clutch and end bearing as a unit from forward clutch hub.

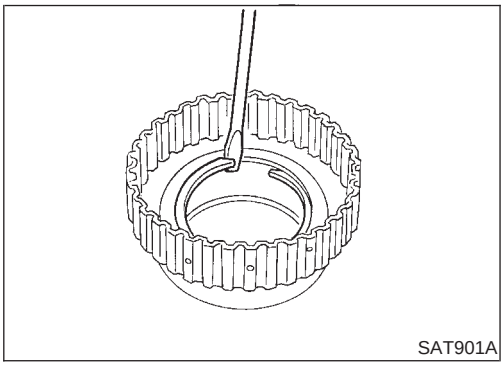
SAT901A

6. Remove snap ring from forward clutch hub.

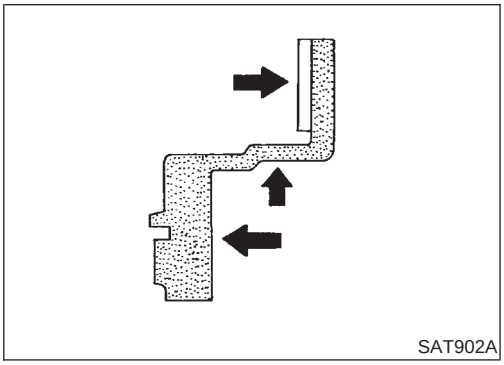
SAT902A

INSPECTION

NMAT0146

Rear Internal Gear and Forward Clutch Hub

NMAT0146S01

- Check gear for excessive wear, chips or cracks.
- Check frictional surfaces of forward one-way clutch and thrust washer for wear or damage.
- Check spline for wear or damage.

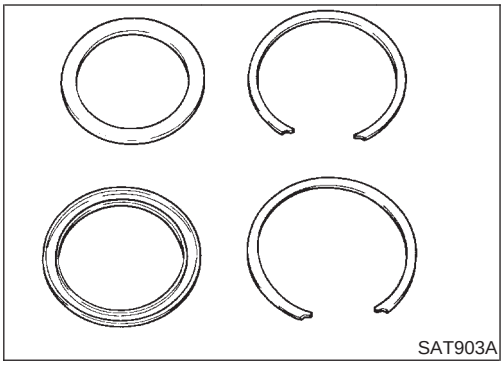
SAT903A

Snap Ring and End Bearing

NMAT0146S02

- Check for deformation or damage.

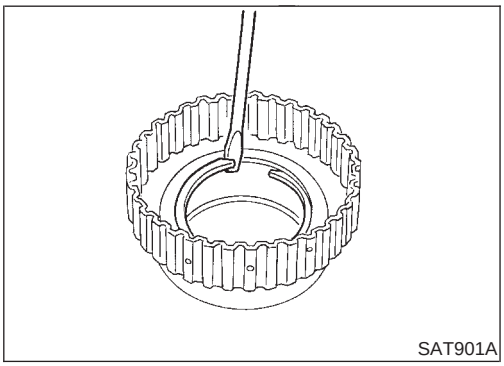
SAT901A

ASSEMBLY

NMAT0147

1. Install snap ring onto forward clutch hub.
2. Install end bearing.

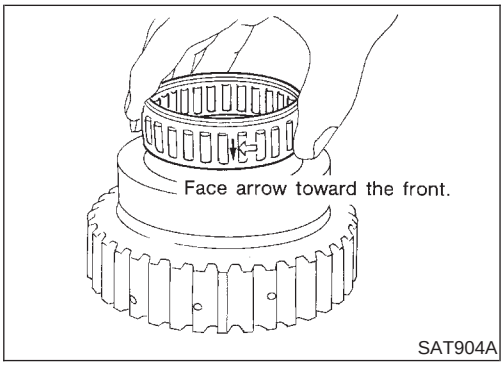

SAT904A

3. Install forward one-way clutch onto clutch hub.
- **Install forward one-way clutch with flange facing rearward.**
4. Install end bearing.
5. Install snap ring onto forward clutch hub.

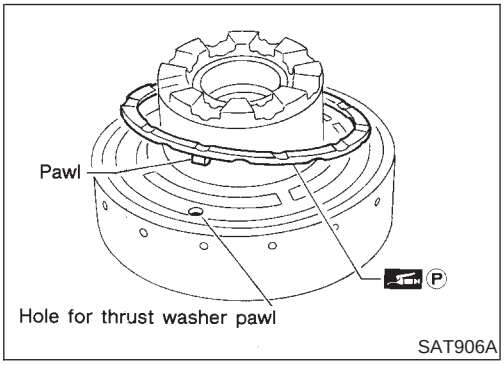

SAT906A

6. Install thrust washer onto rear internal gear.
- **Apply petroleum jelly to thrust washer.**
- **Securely insert pawls of thrust washer into holes in rear internal gear.**

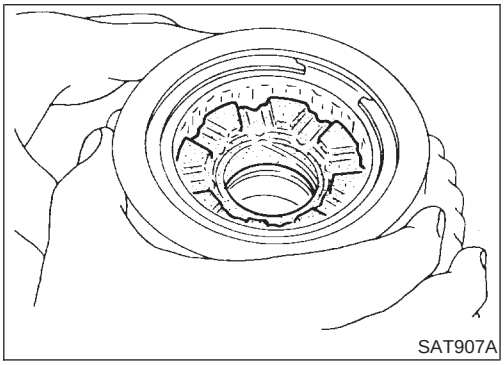
SAT907A

7. Position forward clutch hub in rear internal gear.

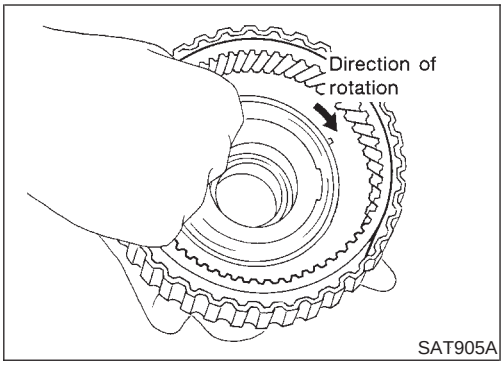

8. After installing, check to assure that forward clutch hub rotates clockwise.

Band Servo Piston Assembly

COMPONENTS

NMAT0148

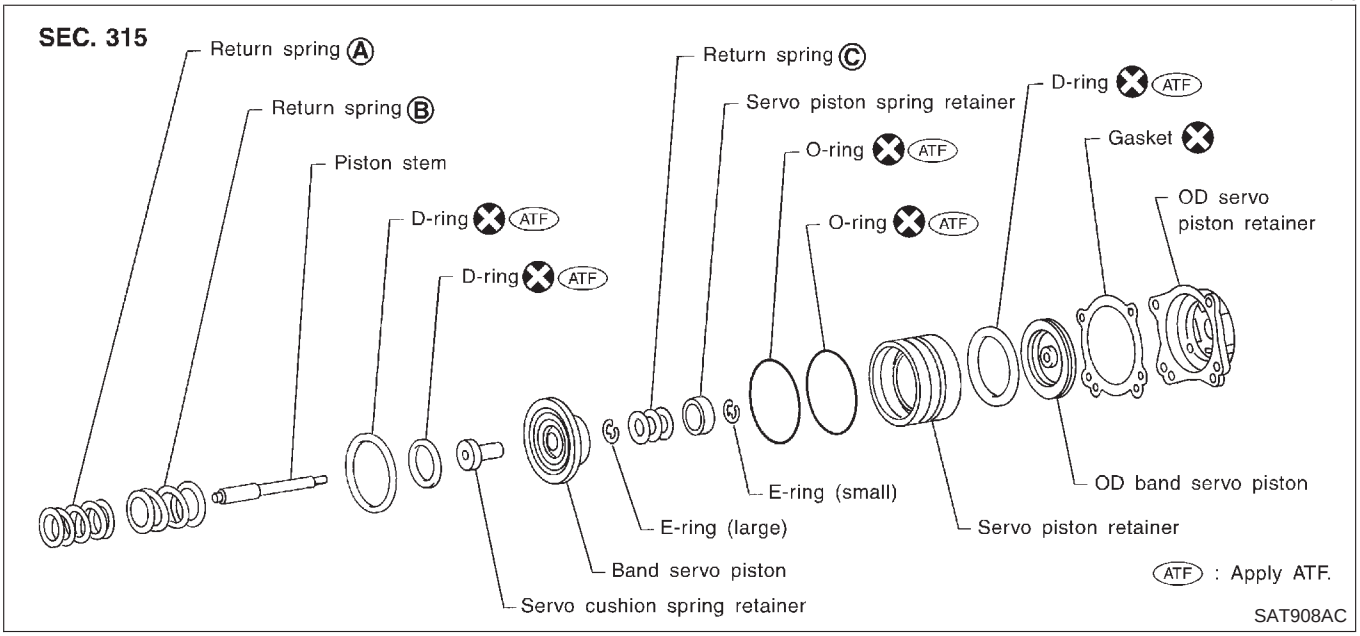

DISASSEMBLY

NMAT0149

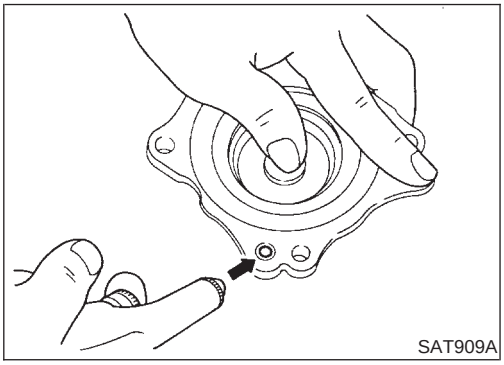

1. Block one oil hole in OD servo piston retainer and the center hole in OD band servo piston.
2. Apply compressed air to the other oil hole in piston retainer to remove OD band servo piston from retainer.
3. Remove D-ring from OD band servo piston.

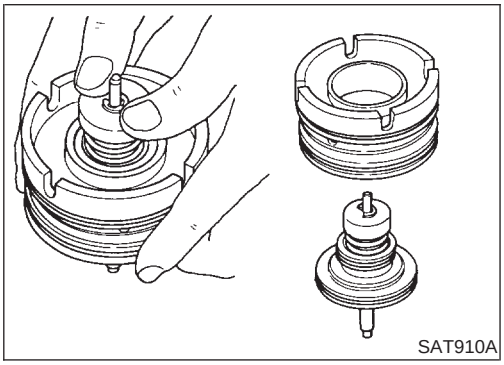

4. Remove band servo piston assembly from servo piston retainer by pushing it forward.

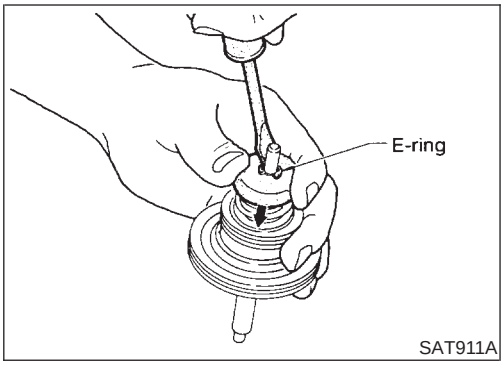

SAT911A

5. Place piston stem end on a wooden block. While pushing servo piston spring retainer down, remove E-ring.

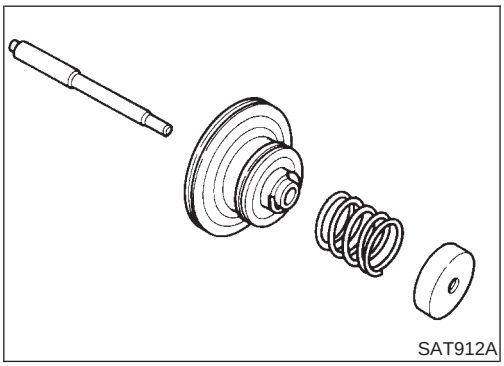
SAT912A

6. Remove servo piston spring retainer, return spring C and piston stem from band servo piston.

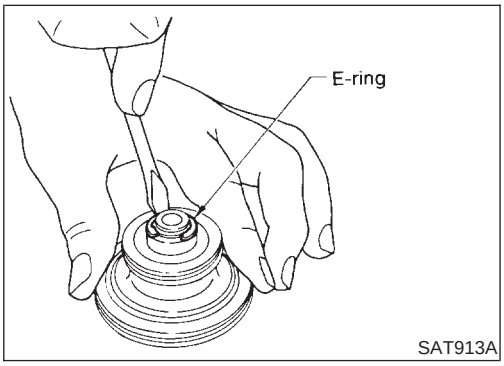

SAT913A

7. Remove E-ring from band servo piston.

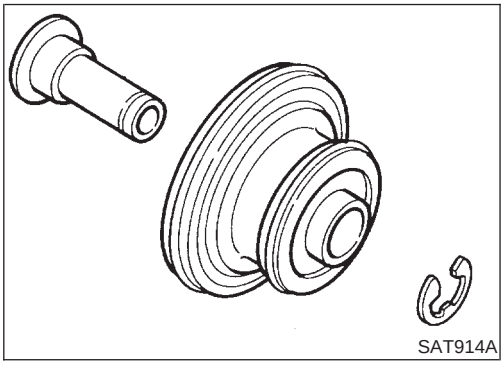
SAT914A

8. Remove servo cushion spring retainer from band servo piston.
9. Remove D-rings from band servo piston.
10. Remove O-rings from servo piston retainer.

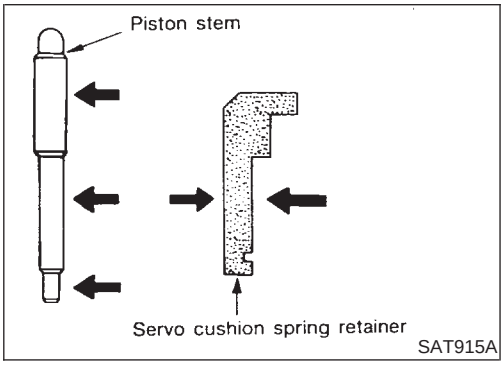

SAT915A

INSPECTION

NMAT0150

Pistons, Retainers and Piston Stem

NMAT0150S01

- Check frictional surfaces for abnormal wear or damage.

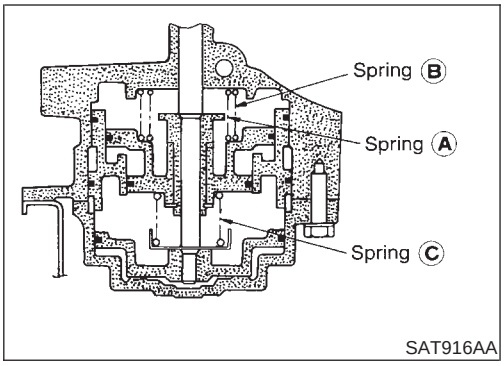

SAT916AA

Return Springs

NMAT0150S02

- Check for deformation or damage. Measure free length and outer diameter.

Inspection standard:
Refer to SDS, AT-289.

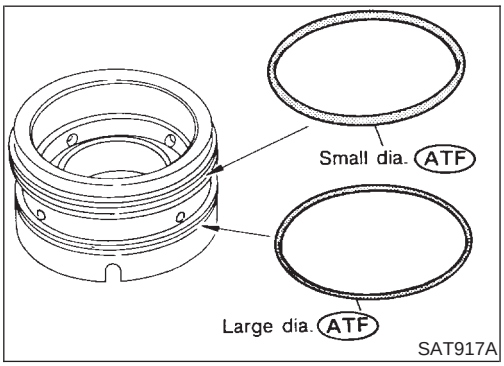

SAT917A

ASSEMBLY

NMAT0151

1. Install O-rings onto servo piston retainer.
- **Apply ATF to O-rings.**
- **Pay attention to position of each O-ring.**

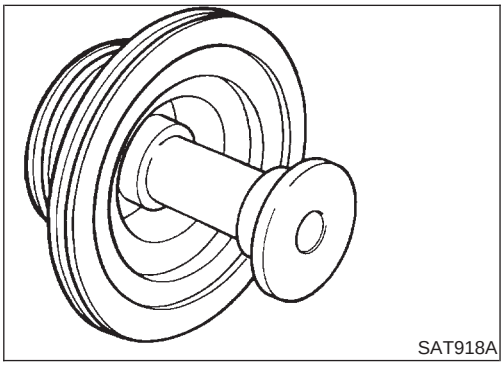
SAT918A

2. Install servo cushion spring retainer onto band servo piston.

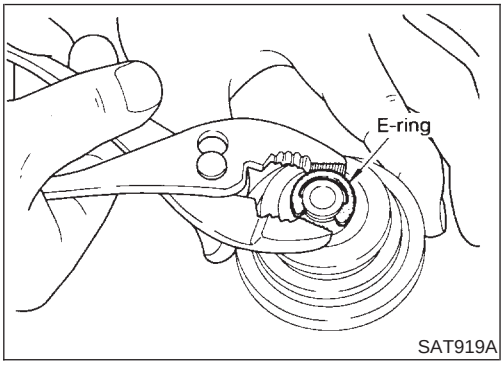

SAT919A

3. Install E-ring onto servo cushion spring retainer.

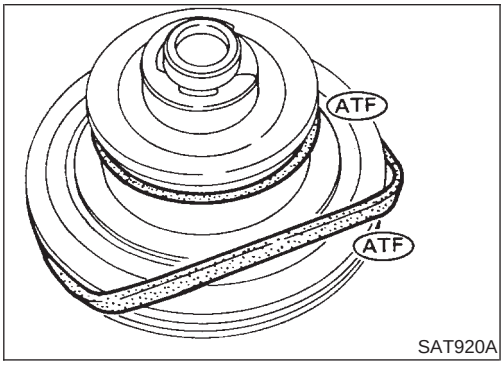

SAT920A

4. Install D-rings onto band servo piston.
- **Apply ATF to D-rings.**

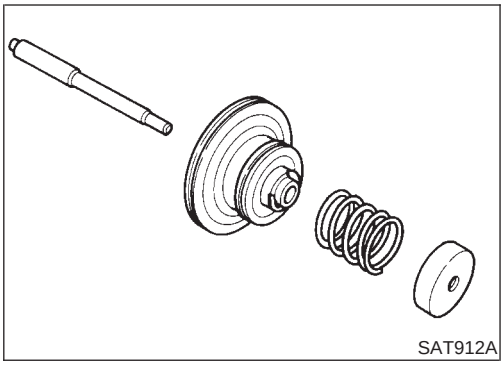
SAT912A

5. Install servo piston spring retainer, return spring C and piston stem onto band servo piston.

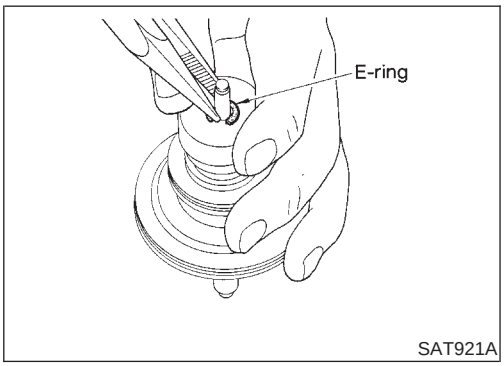

SAT921A

6. Place piston stem end on a wooden block. While pushing servo piston spring retainer down, install E-ring.

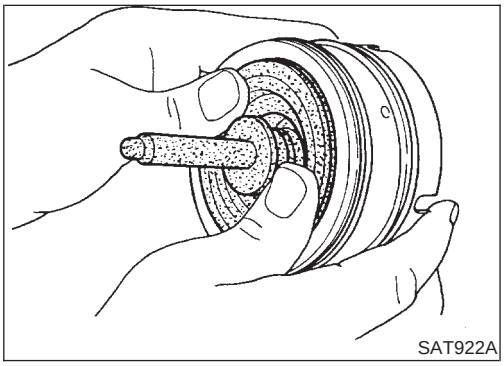
SAT922A

7. Install band servo piston assembly onto servo piston retainer by pushing it inward.

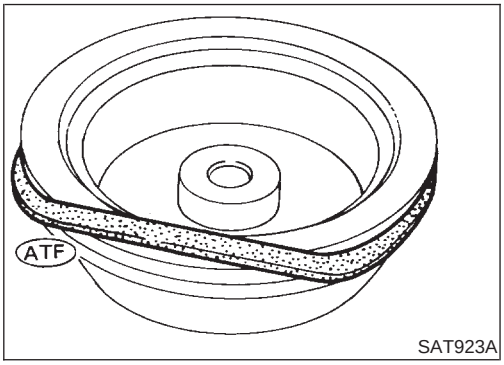

SAT923A

8. Install D-ring on OD band servo piston.
- **Apply ATF to D-ring.**

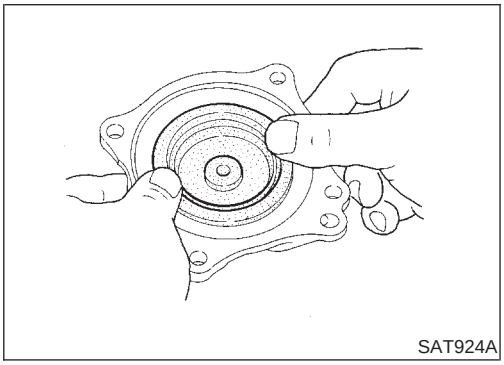
SAT924A

9. Install OD band servo piston onto servo piston retainer by pushing it inward.

Parking Pawl Components

COMPONENTS

NMAT0152

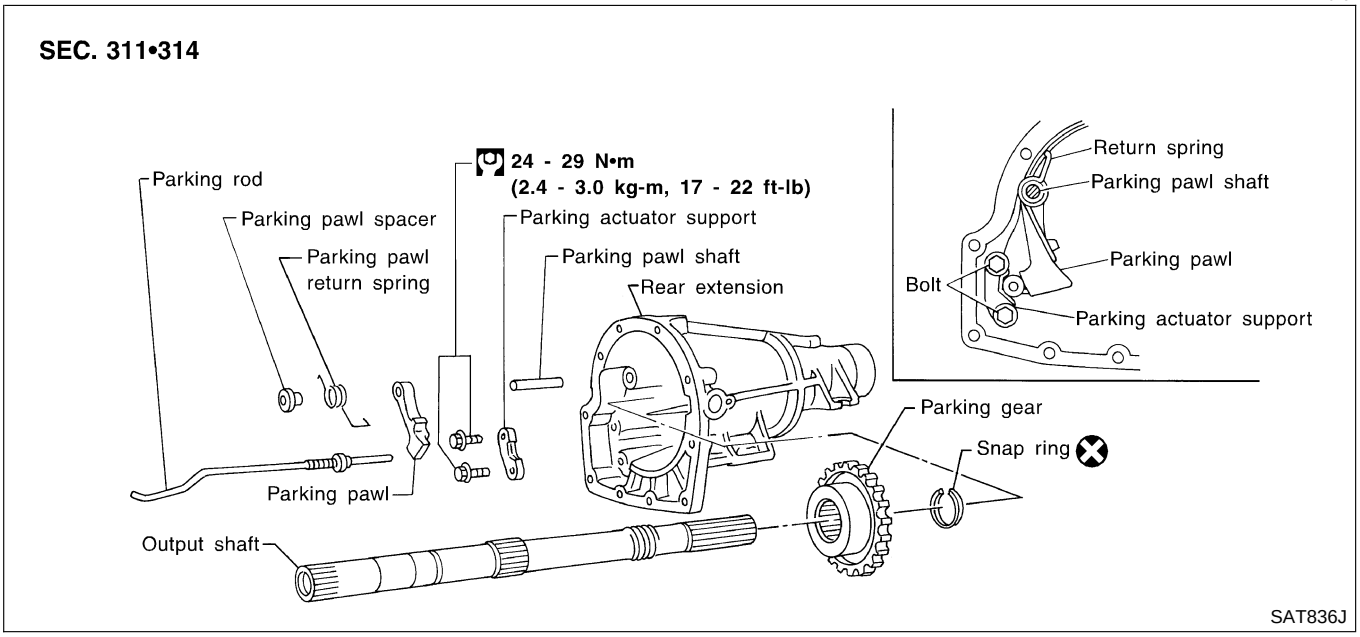

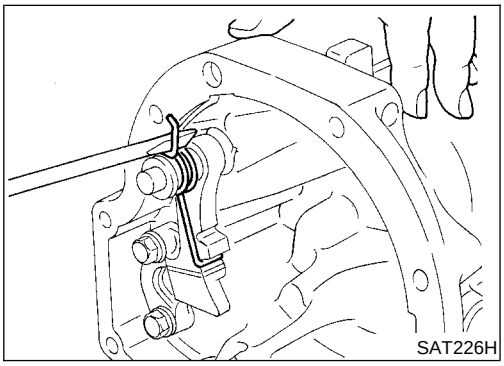

DISASSEMBLY

NMAT0153

1. Slide return spring to the front of adapter case flange.
2. Remove return spring, parking pawl spacer and parking pawl from adapter case.
3. Remove parking pawl shaft from adapter case.

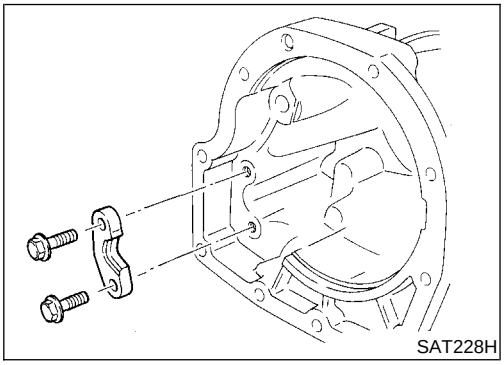

4. Remove parking actuator support from adapter case.

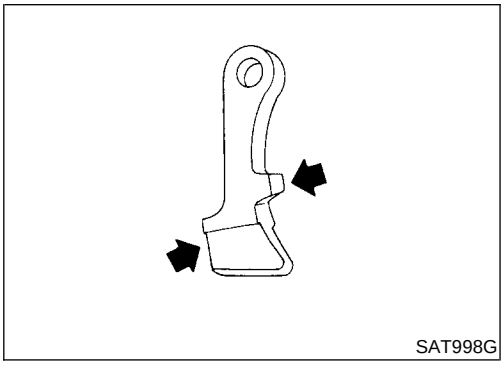

INSPECTION

NMAT0209

Parking Pawl and Parking Actuator Support

NMAT0209S01

- Check contact surface of parking rod for wear.

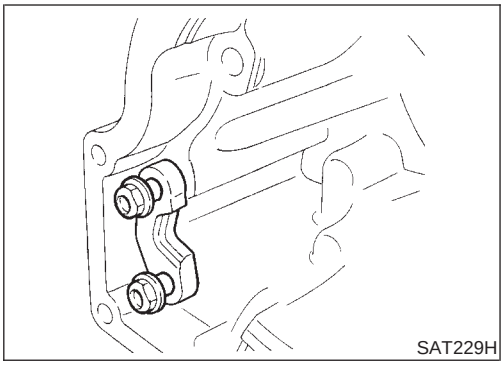

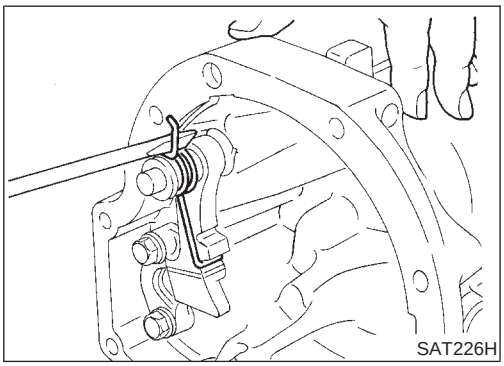

ASSEMBLY

NMAT0154

1. Install parking actuator support onto adapter case.
2. Insert parking pawl shaft into adapter case.
3. Install return spring, pawl spacer and parking pawl onto parking pawl shaft.
4. Bend return spring upward and install it onto adapter case.

Assembly (1)

NMAT0155

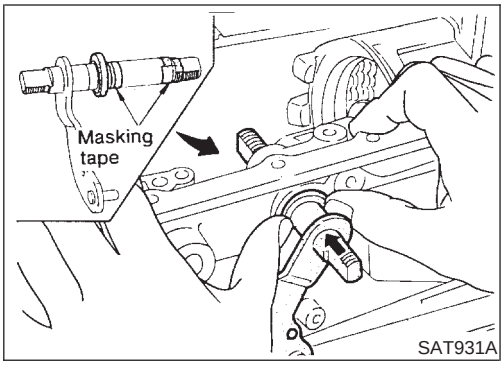

1. Install manual shaft components.

a. Install oil seal onto manual shaft.

- **Apply ATF to oil seal.**
- **Wrap threads of manual shaft with masking tape.**

b. Insert manual shaft and oil seal as a unit into transmission case.

c. Remove masking tape.

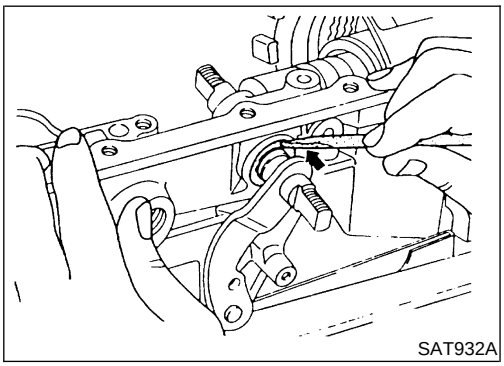

d. Push oil seal evenly and install it onto transmission case.

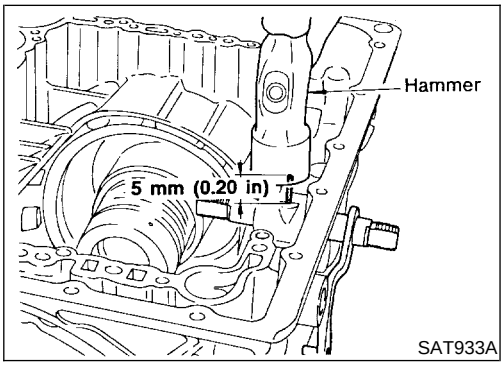

e. Align groove in shaft with retaining pin hole, then retaining pin into position as shown in figure at left.

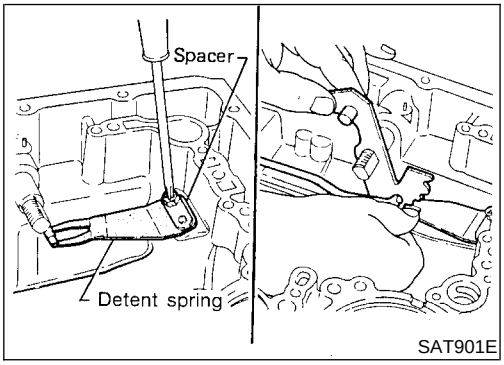

f. Install detent spring and spacer.

g. While pushing detent spring down, install manual plate onto manual shaft.

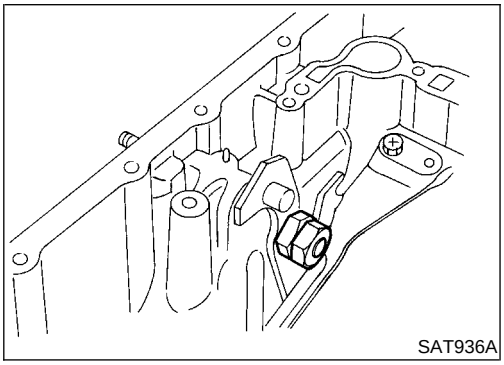

h. Install lock nuts onto manual shaft.

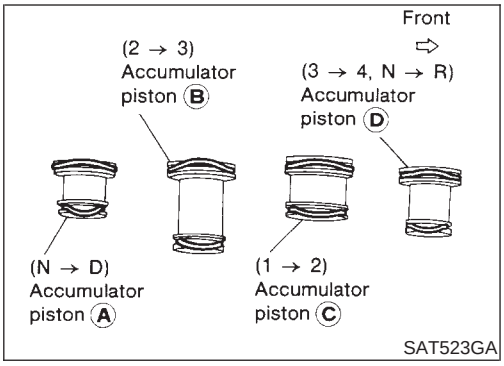

2. Install accumulator piston.
a. Install O-rings onto accumulator piston.
- **Apply ATF to O-rings.**

Accumulator piston O-rings

Unit: mm (in)

Accumulator	A	B	C	D
Small diameter end	29 (1.14)	32 (1.26)	45 (1.77)	29 (1.14)
Large diameter end	45 (1.77)	50 (1.97)	50 (1.97)	45 (1.77)

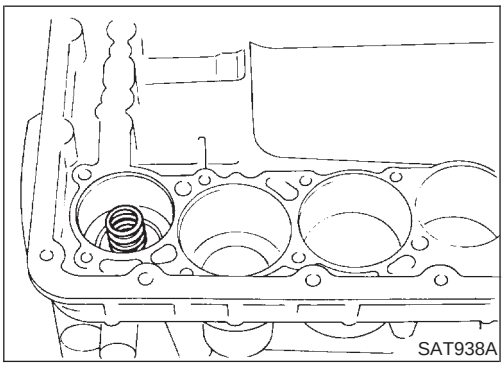

b. Install return spring for accumulator A onto transmission case.

Free length of return spring:
Refer to SDS, AT-289.

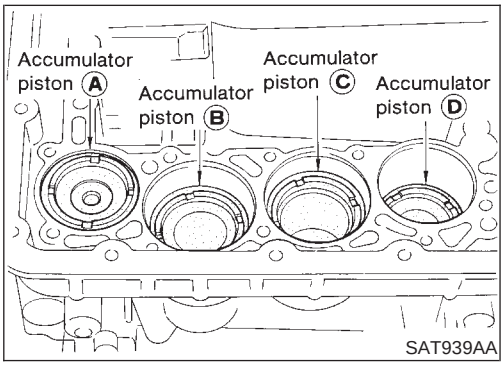

c. Install accumulator pistons A, B, C and D.
- **Apply ATF to transmission case.**

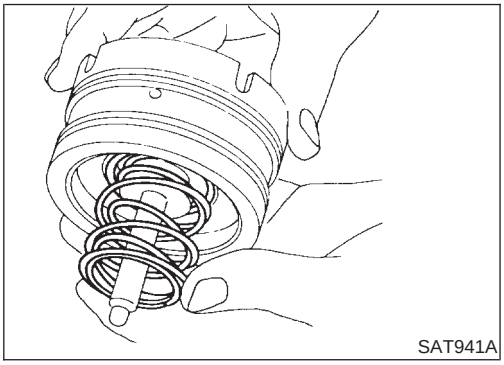

3. Install band servo piston.
a. Install return springs onto servo piston.

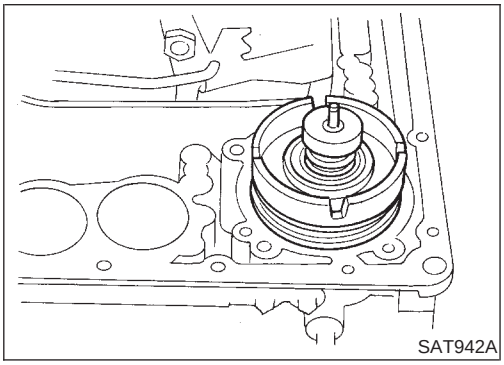

b. Install band servo piston onto transmission case.
- **Apply ATF to O-ring of band servo piston and transmission case.**

c. Install gasket for band servo onto transmission case.

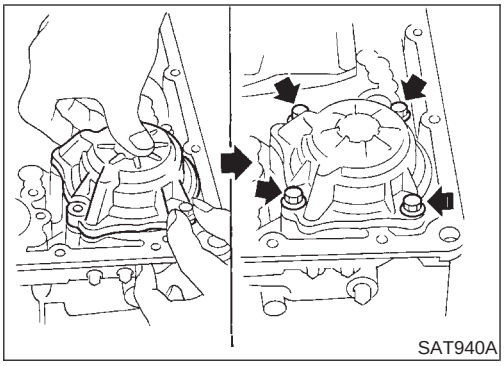

d. Install band servo retainer onto transmission case.

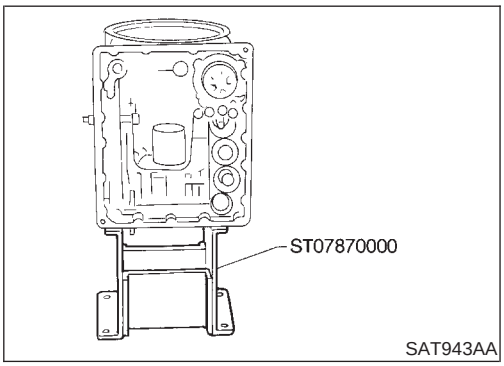

4. Install rear side clutch and gear components.

a. Place transmission case in vertical position.

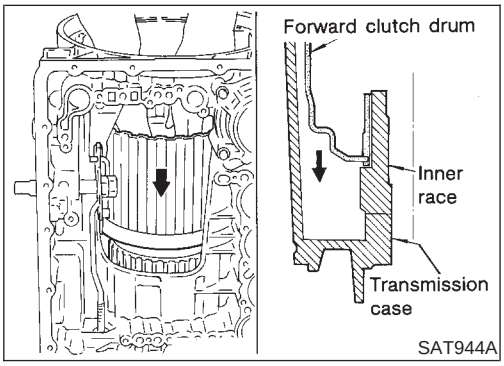

b. Slightly lift forward clutch drum assembly. Then slowly rotate it clockwise until its hub passes fully over clutch inner race inside transmission case.

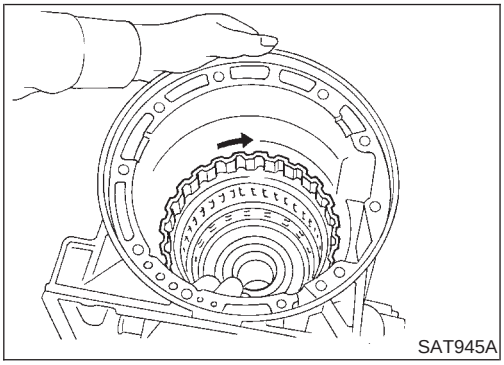

c. Check to be sure that rotation direction of forward clutch assembly is correct.

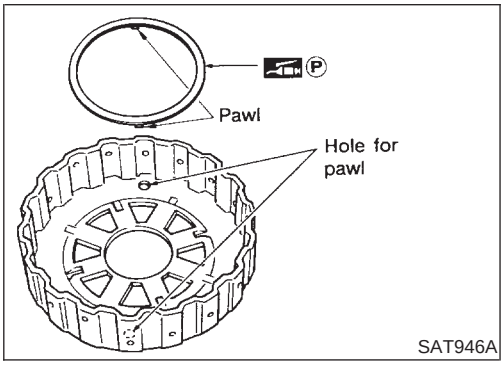

d. Install thrust washer onto front of overrun clutch hub.

- **Apply petroleum jelly to the thrust washer.**
- **Insert pawls of thrust washer securely into holes in overrun clutch hub.**

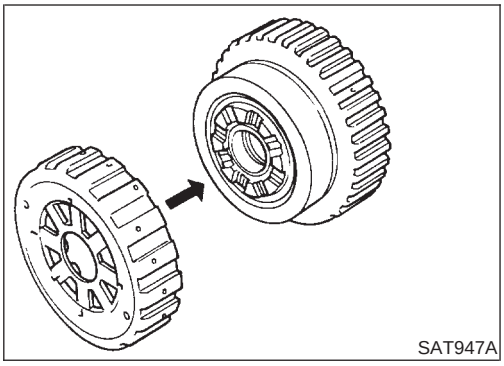

e. Install overrun clutch hub onto rear internal gear assembly.

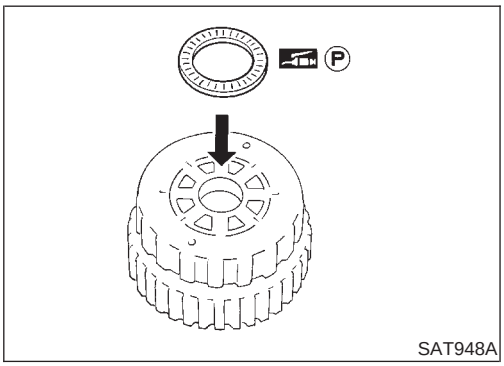

f. Install needle bearing onto rear of overrun clutch hub.

- **Apply petroleum jelly to needle bearing.**

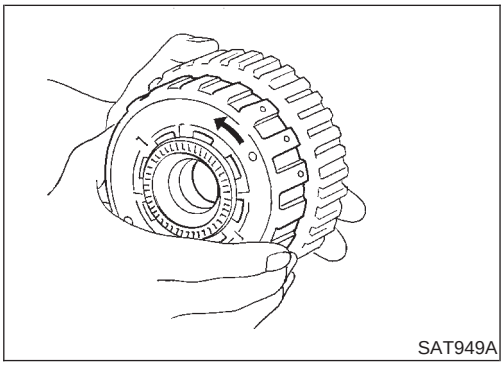

g. Check that overrun clutch hub rotates as shown while holding forward clutch hub.

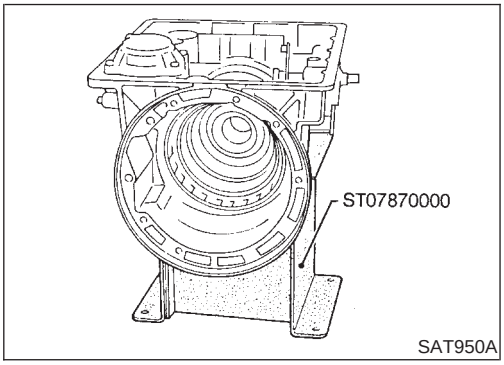

h. Place transmission case into horizontal position.

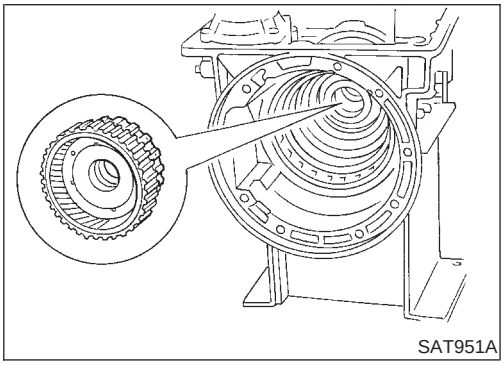

i. Install rear internal gear, forward clutch hub and overrun clutch hub as a unit onto transmission case.

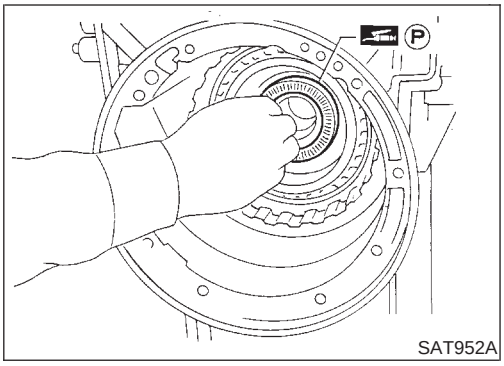

j. Install needle bearing onto rear internal gear.

- **Apply petroleum jelly to needle bearing.**

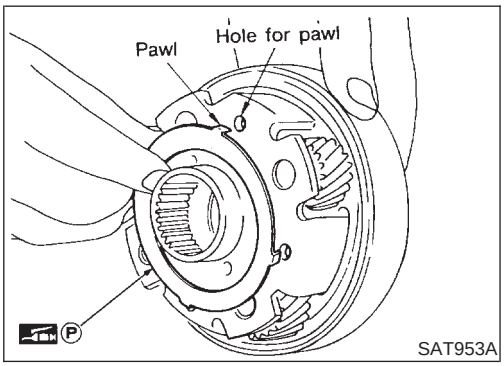

k. Install bearing race onto rear of front internal gear.

- **Apply petroleum jelly to bearing race.**
- **Securely engage pawls of bearing race with holes in front internal gear.**

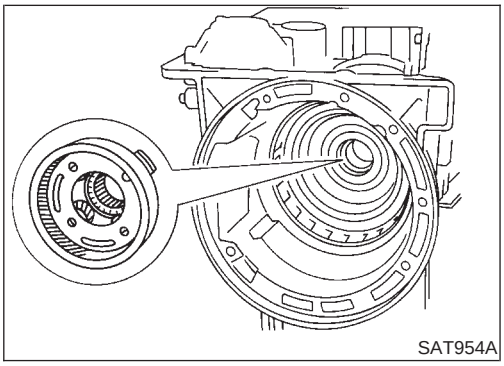

l. Install front internal gear on transmission case.

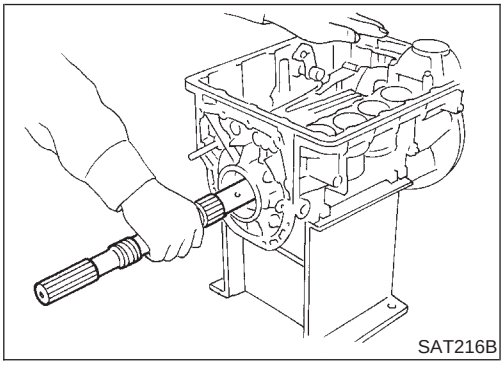

5. Install output shaft and parking gear.

a. Insert output shaft from rear of transmission case while slightly lifting front internal gear.

- **Do not force output shaft against front of transmission case.**

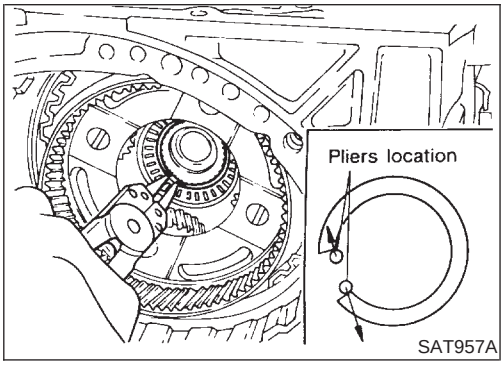

b. Carefully push output shaft against front of transmission case. Install snap ring on front of output shaft.

- **Check to be sure output shaft cannot be removed in rear direction.**

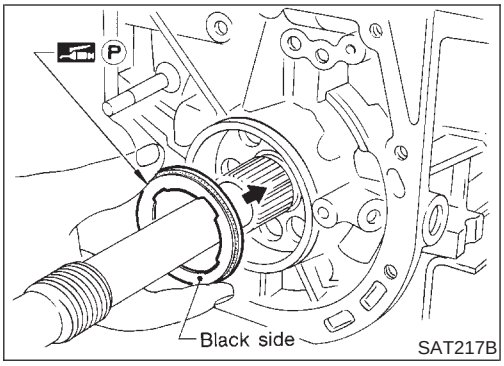

SAT217B

c. Install needle bearing on transmission case.
- **Pay attention to its direction — Black side goes to rear.**
- **Apply petroleum jelly to needle bearing.**

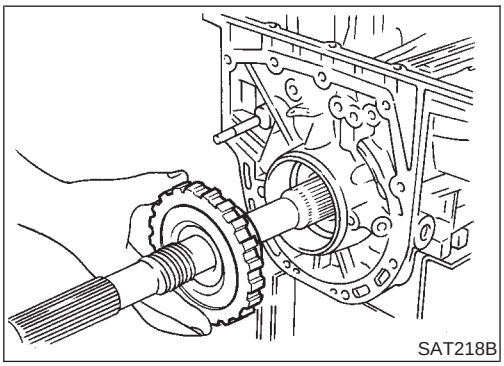
SAT218B

d. Install parking gear on transmission case.

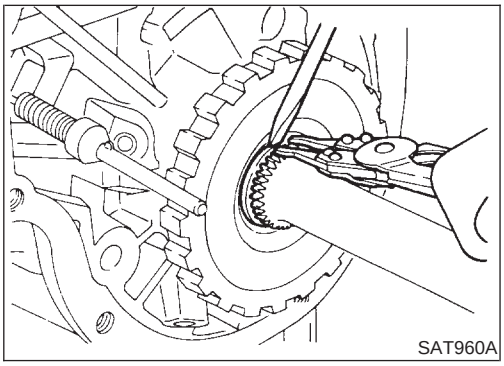
SAT960A

e. Install snap ring on rear of output shaft.
- **Check to be sure output shaft cannot be removed in forward direction.**

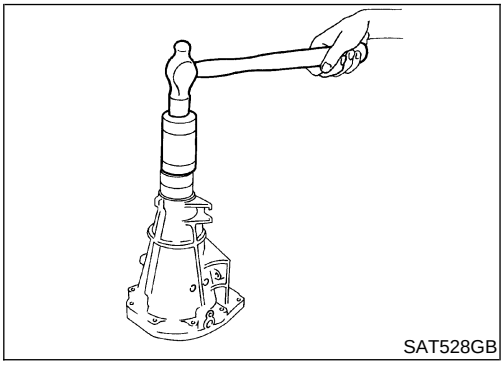
SAT528GB

6. Install rear extension.
a. Install oil seal on rear extension.
- **Apply ATF to oil seal.**

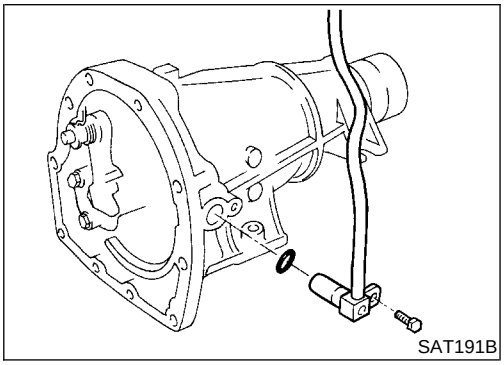
SAT191B

b. Install O-ring on revolution sensor.
- **Apply ATF to O-ring.**

c. Install revolution sensor on adapter case.

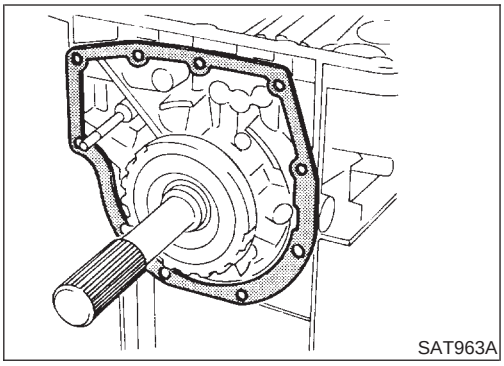

d. Install adapter case gasket on transmission case.

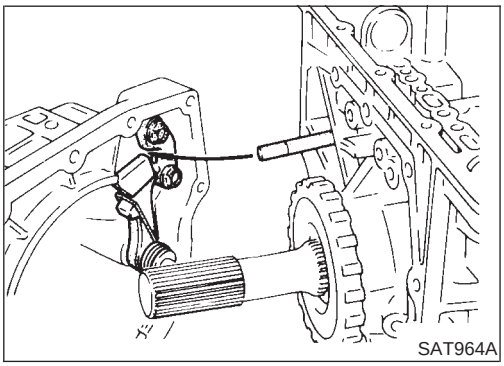

e. Install parking rod on transmission case.

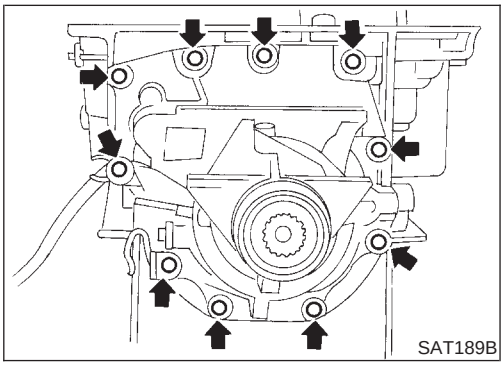

f. Install rear extension on transmission case.

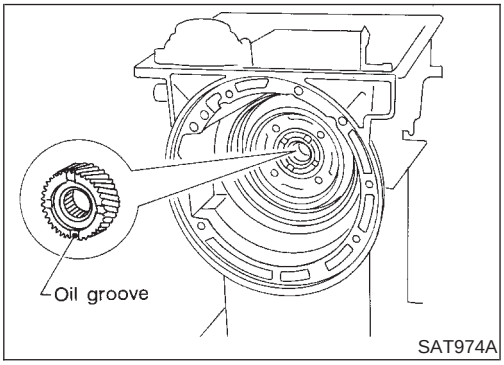

7. Install front side clutch and gear components.

a. Install rear sun gear on transmission case.

- **Pay attention to its direction.**

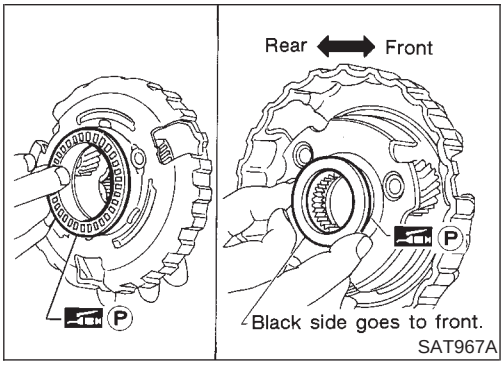

b. Make sure needle bearing is on front of front planetary carrier.

- **Apply petroleum jelly to needle bearing.**

c. Make sure needle bearing is on rear of front planetary carrier.

- **Apply petroleum jelly to bearing.**
- **Pay attention to its direction — Black side goes to front.**

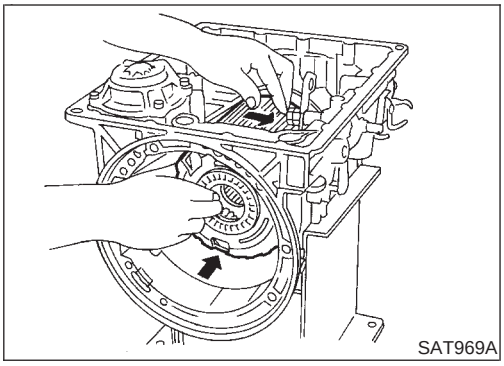

d. While rotating forward clutch drum clockwise, install front planetary carrier on forward clutch drum.

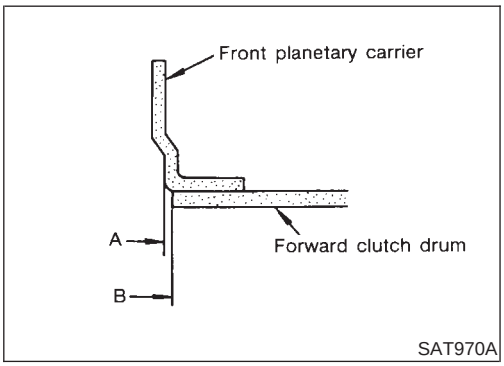

- **Check that portion A of front planetary carrier protrudes approximately 2 mm (0.08 in) beyond portion B of forward clutch assembly.**

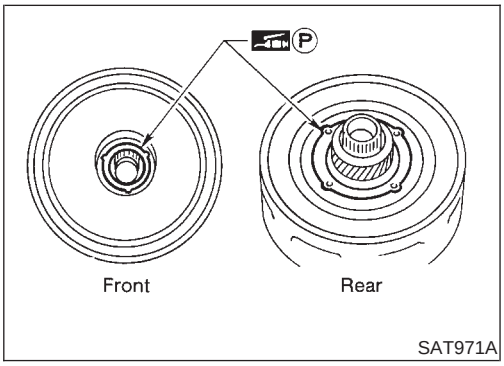

e. Make sure bearing races are on front and rear of clutch pack.

- **Apply petroleum jelly to bearing races.**
- **Securely engage pawls of bearing races with holes in clutch pack.**

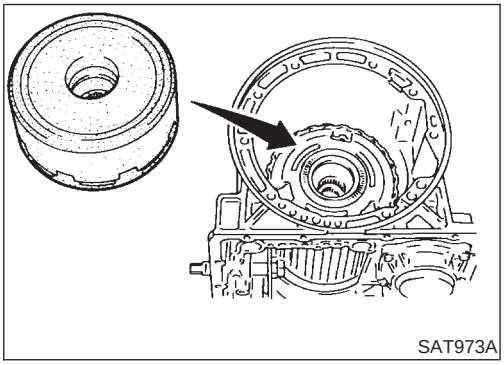

f. Install clutch pack into transmission case.

Adjustment

=NMAT0156

When any parts listed in the following table are replaced, total end play or reverse clutch end play must be adjusted.

Part name	Total end play	Reverse clutch end play
Transmission case	●	●
Low one-way clutch inner race	●	●
Overrun clutch hub	●	●
Rear internal gear	●	●
Rear planetary carrier	●	●
Rear sun gear	●	●
Front planetary carrier	●	●
Front sun gear	●	●
High clutch hub	●	●
High clutch drum	●	●
Oil pump cover	●	●
Reverse clutch drum	—	●

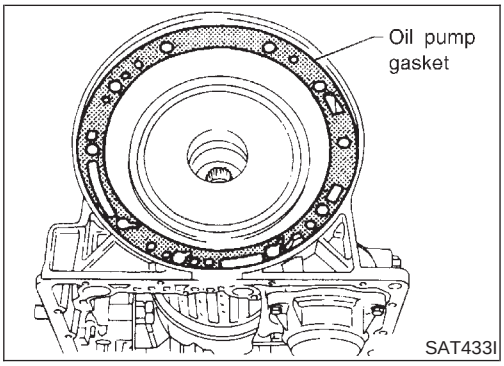

1. Adjust total end play.

a. Install new oil pump gasket on transmission case.

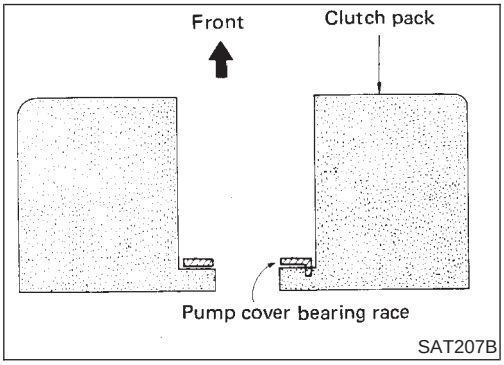

b. Install pump cover bearing race on clutch pack.

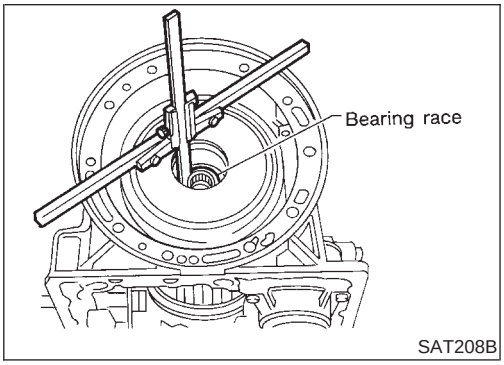

c. Measure distance “B” between front end of transmission case and oil pump cover bearing race.

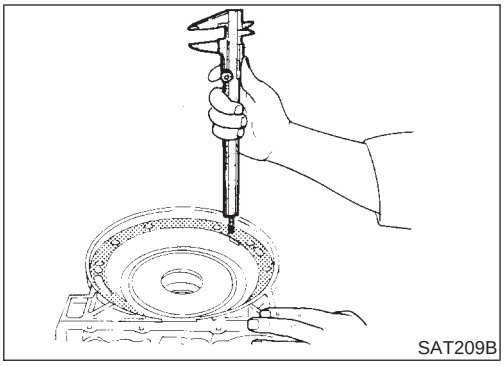

d. Measure distance "C" between front end of transmission case and oil pump gasket.

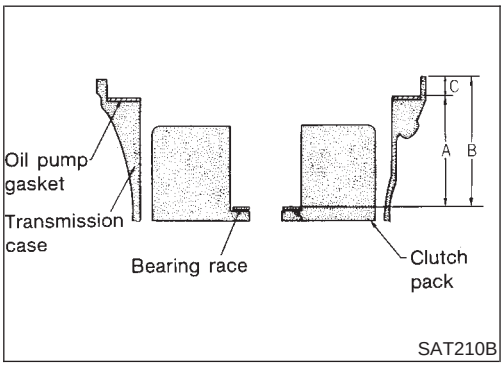

e. Determine dimension "A" by using the following equation.

A = B − C

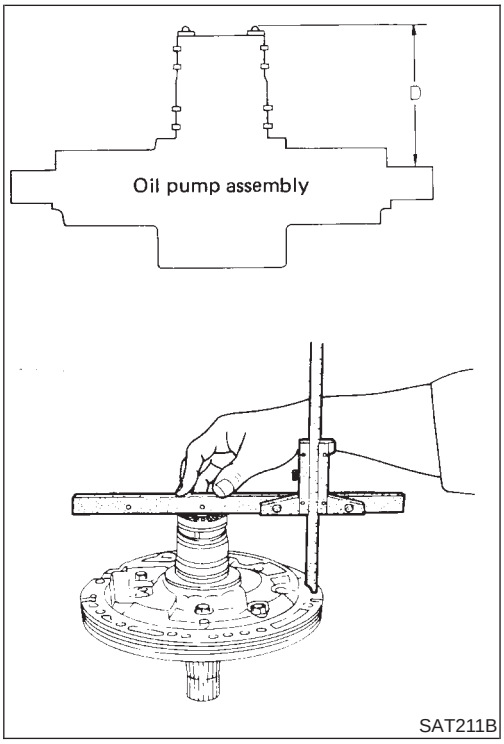

f. Install needle bearing on oil pump assembly.

g. Measure distance "D" between needle bearing and machined surface of oil pump cover assembly.

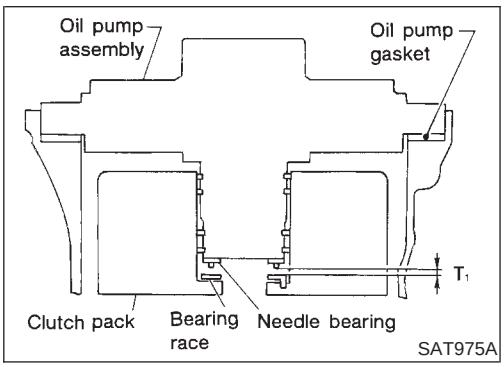

h. Determine total end play "T_1" by using the following equation.

T_1 = A − D − 0.1

Total end play "T_1":

0.25 - 0.55 mm (0.0098 - 0.0217 in)

- If end play is out of specification, decrease or increase thickness of oil pump cover bearing race as necessary.

Available oil pump cover bearing race:

Refer to SDS, AT-292.

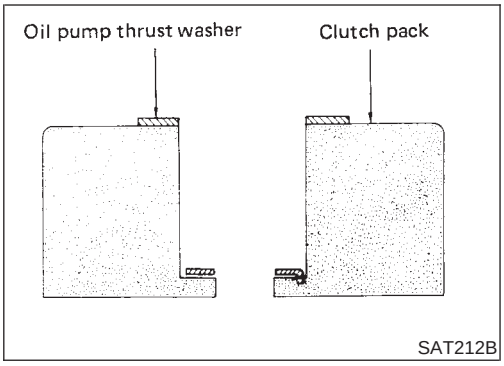

2. Adjust reverse clutch drum end play.
a. Install oil pump thrust washer on clutch pack.

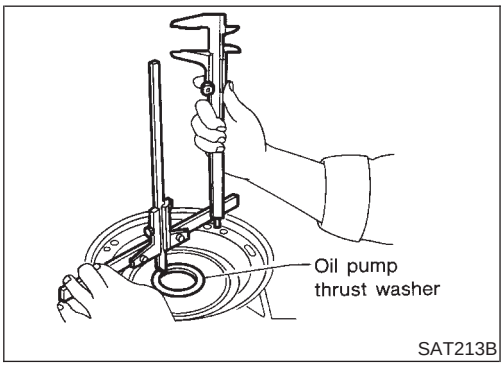

b. Measure distance "F" between front end of transmission case and oil pump thrust washer.
c. Measure distance "G" between front end of transmission case and gasket.

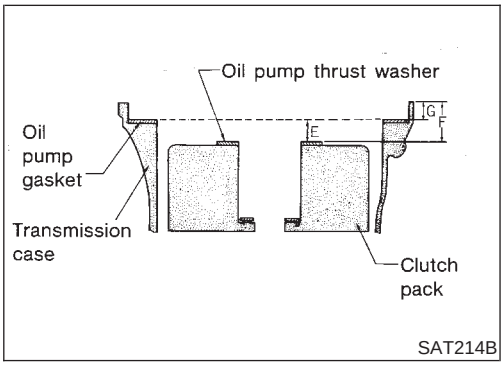

d. Determine dimension "E" by using the following equation.

E = F − G

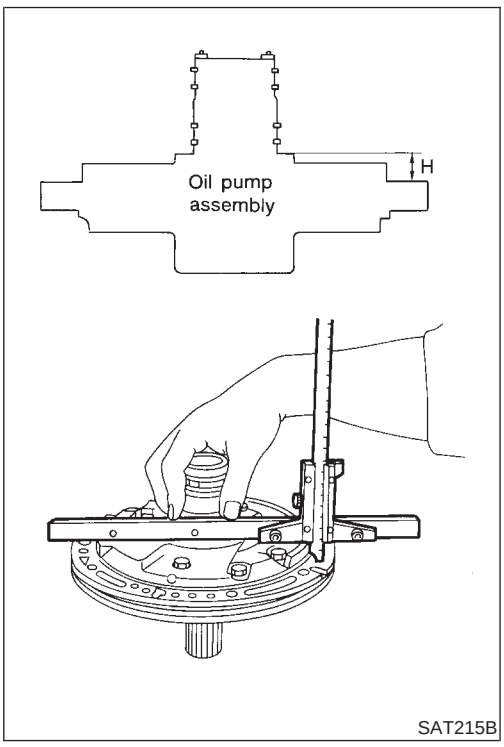

e. Measure distance "H".

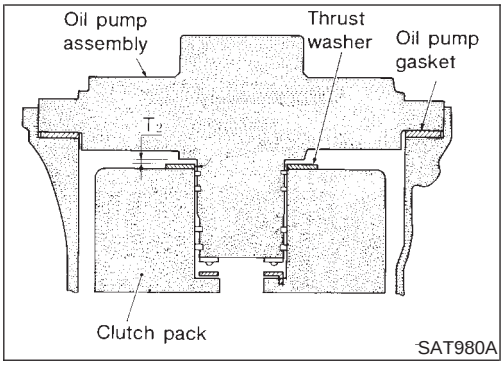

f. Determine reverse clutch drum end play "T_2" by using the following equation.

T_2 = E − H − 0.1

Reverse clutch drum end play "T_2":

0.55 - 0.90 mm (0.0217 - 0.0354 in)

- If end play is out of specification, decrease or increase thickness of oil pump thrust washer as necessary.

Available oil pump thrust washer:

Refer to SDS, AT-293.

3. Remove any part installed to adjust end plays.

Assembly (2)

NMAT0157

1. Install brake band and band strut.

a. Install band strut on brake band.

- **Apply petroleum jelly to band strut.**

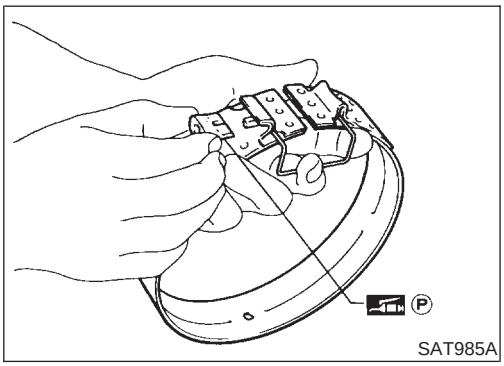

b. Place brake band on periphery of reverse clutch drum, and insert band strut into end of band servo piston stem.

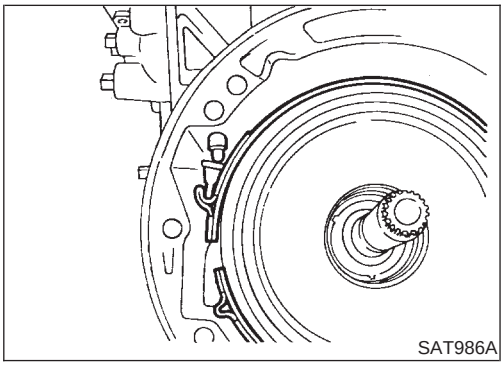

c. Install anchor end bolt on transmission case. Then, tighten anchor end bolt just enough so that reverse clutch drum (clutch pack) will not tilt forward.

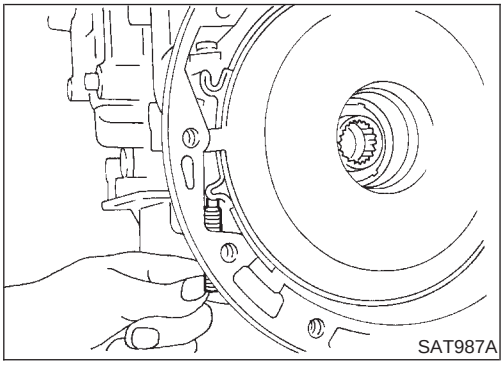

2. Install input shaft on transmission case.

- **Pay attention to its direction — O-ring groove side is front.**

3. Install gasket on transmission case.

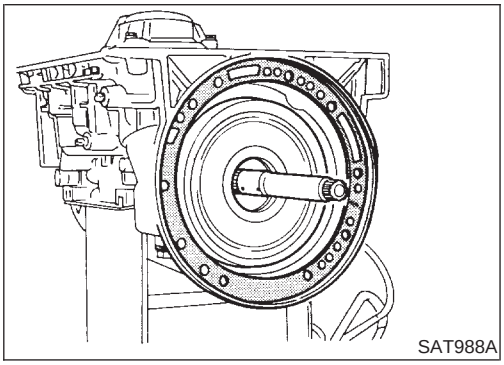

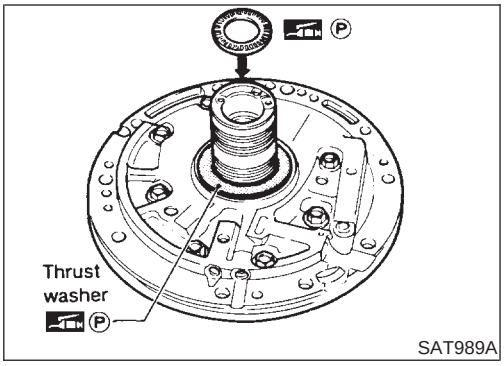

4. Install oil pump assembly.

a. Install needle bearing on oil pump assembly.

- **Apply petroleum jelly to the needle bearing.**

b. Install selected thrust washer on oil pump assembly.

- **Apply petroleum jelly to thrust washer.**

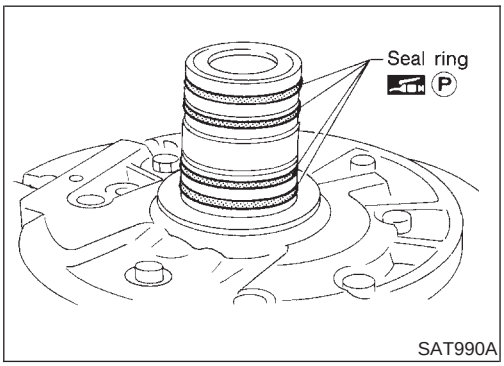

c. Carefully install seal rings into grooves and press them into the petroleum jelly so that they are a tight fit.

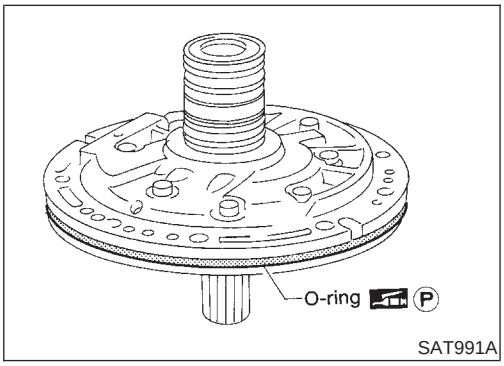

d. Install O-ring on oil pump assembly.

- **Apply petroleum jelly to O-ring.**

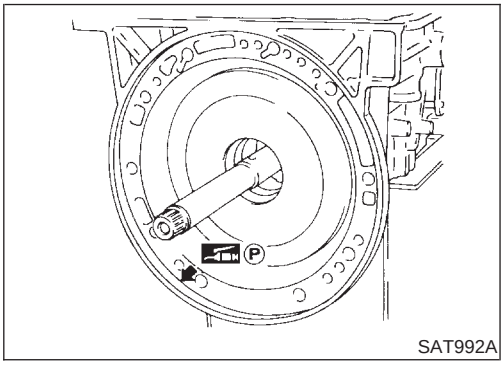

e. Apply petroleum jelly to mating surface of transmission case and oil pump assembly.

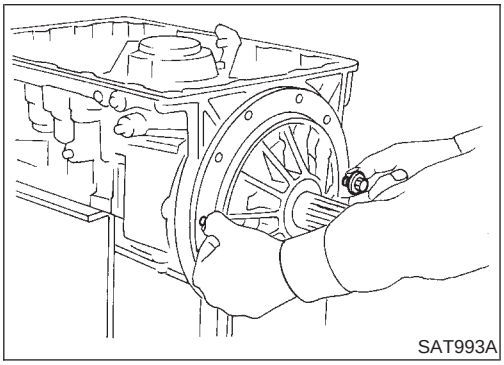

f. Install oil pump assembly.

- **Install two converter housing securing bolts in bolt holes in oil pump assembly as guides.**

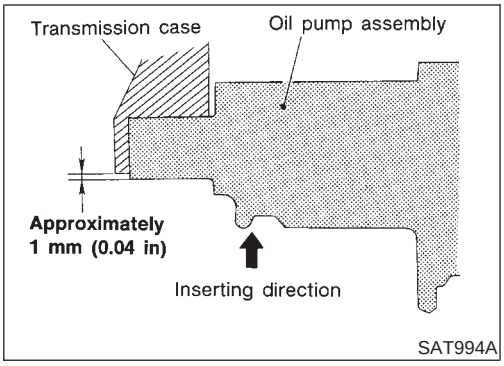

- **Insert oil pump assembly to the specified position in transmission, as shown at left.**

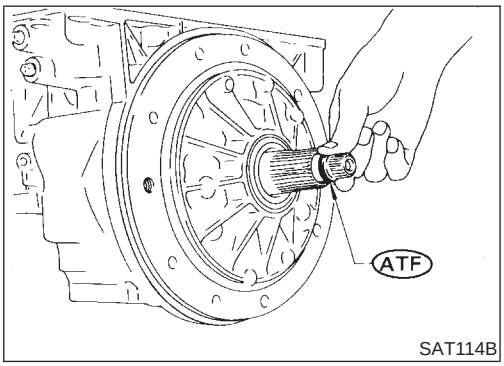

5. Install O-ring on input shaft.
- **Apply ATF to O-rings.**

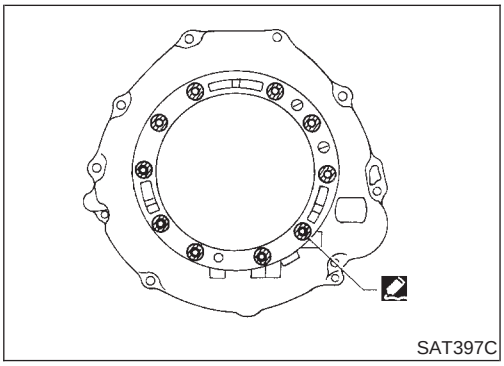

6. Install converter housing.
a. Apply recommended sealant (Nissan genuine part: KP610-00250 or equivalent) to outer periphery of bolt holes in converter housing.
- **Do not apply too much sealant.**

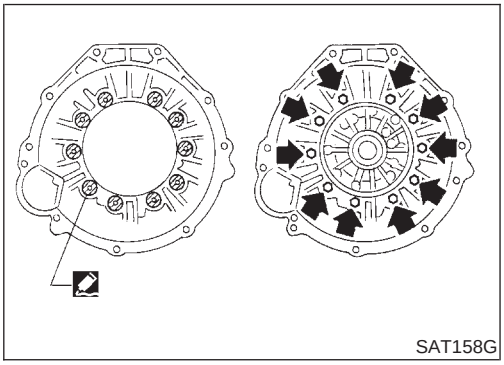

b. Apply recommended sealant (Nissan genuine part: KP610-00250 or equivalent) to seating surfaces of bolts that secure front of converter housing.
c. Install converter housing on transmission case.

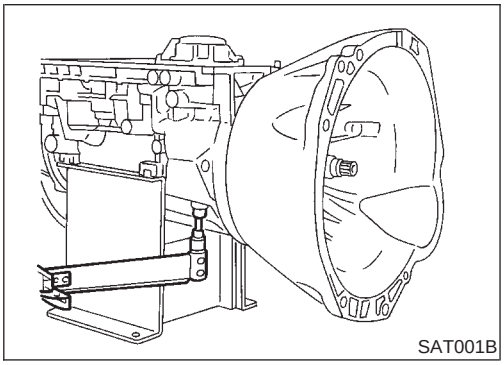

7. Adjust brake band.
a. Tighten anchor end bolt to specified torque.

Anchor end bolt:

: 4 - 6 N·m (0.4 - 0.6 kg-m, 35 - 52 in-lb)

b. Back off anchor end bolt two and a half turns.

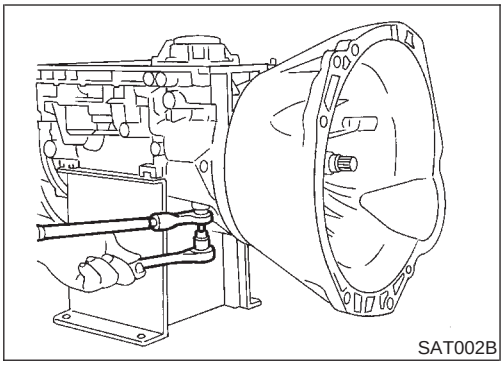

c. While holding anchor end bolt, tighten lock nut.

Anchor end bolt nut:

: 41 - 50 N·m (4.1 - 5.1 kg-m, 30 - 36 ft-lb)

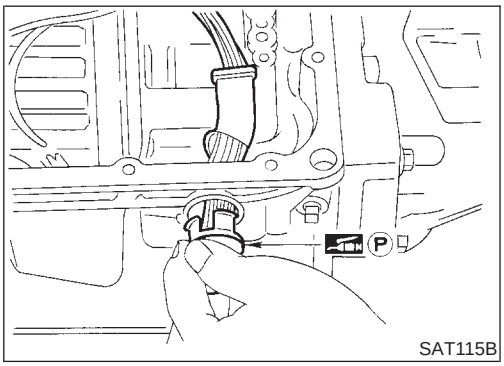

8. Install terminal cord assembly.

a. Install O-ring on terminal cord assembly.

- **Apply petroleum jelly to O-ring.**

b. Compress terminal cord assembly stopper and install terminal cord assembly on transmission case.

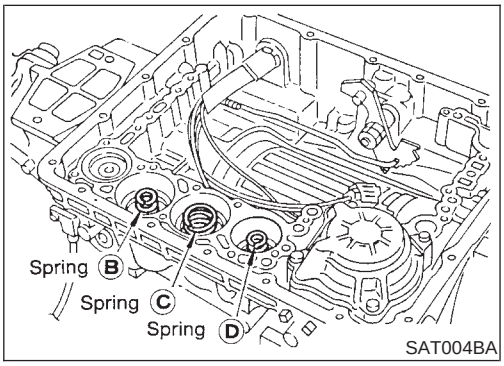

9. Install control valve assembly.

a. Install accumulator piston return springs B, C and D.

Free length of return springs:

Refer to SDS, AT-289.

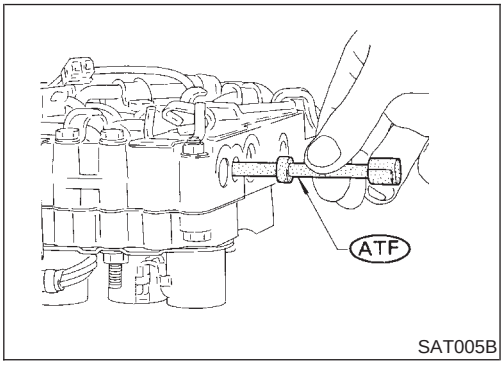

b. Install manual valve on control valve.

- **Apply ATF to manual valve.**

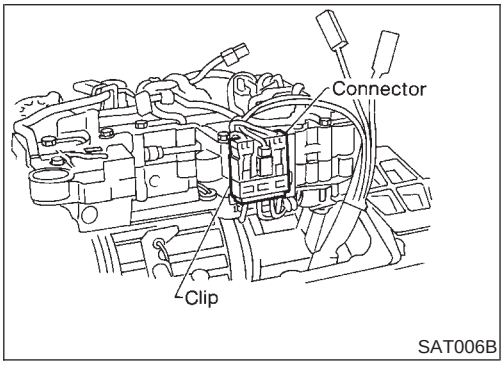

c. Place control valve assembly on transmission case. Connect solenoid connector for upper body.

d. Install connector clip.

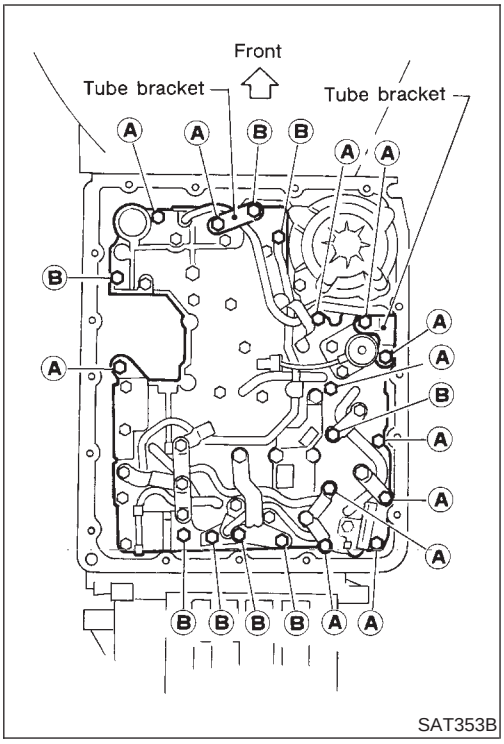

SAT353B

e. Install control valve assembly on transmission case.

f. Install connector tube brackets and tighten bolts A and B.

- **Check that terminal assembly does not catch.**

Bolt symbol	ℓ mm (in)
A	33 (1.30)
B	45 (1.77)

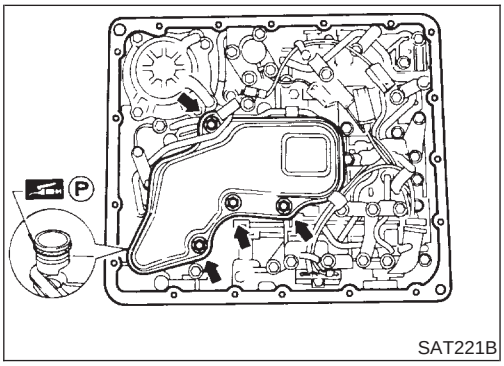

SAT221B

g. Install O-ring on oil strainer.

- **Apply petroleum jelly to O-ring.**

h. Install oil strainer on control valve.

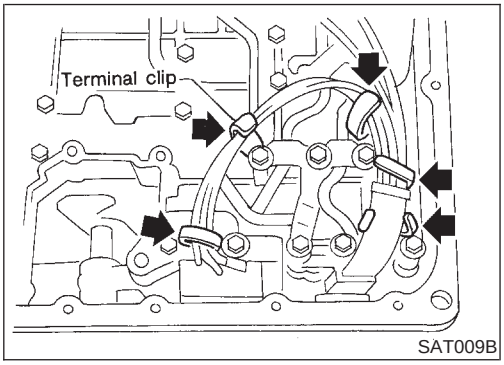

SAT009B

i. Securely fasten terminal harness with clips.

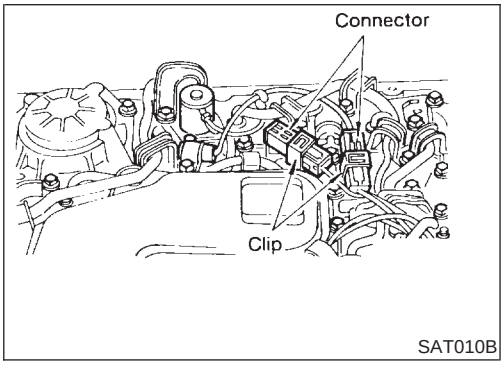

SAT010B

j. Install torque converter clutch solenoid valve and A/T fluid temperature sensor connectors.

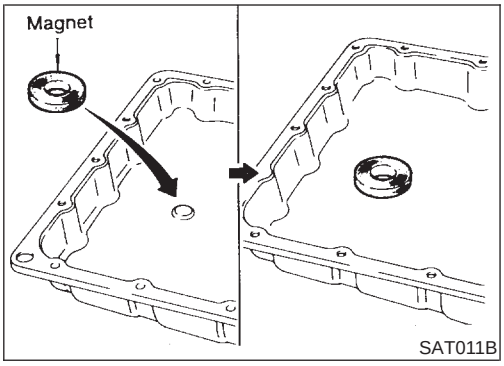

10. Install oil pan.
a. Attach a magnet to oil pan.

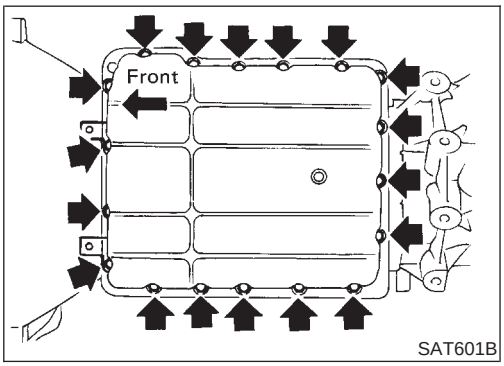

b. Install new oil pan gasket on transmission case.
c. Install oil pan and bracket on transmission case.
- **Always replace oil pan bolts as they are self-sealing bolts.**
- **Before installing bolts, remove traces of sealant and oil from mating surface and thread holes.**
- **Tighten four bolts in a criss-cross pattern to prevent dislocation of gasket.**

d. Tighten drain plug.

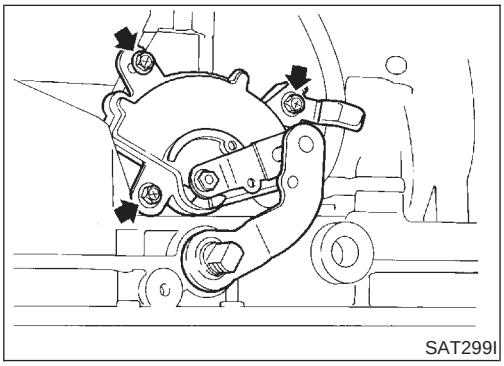

11. Install PNP switch.
a. Check that manual shaft is in "1" position.
b. Temporarily install PNP switch on manual shaft.
c. Move manual shaft to "N".

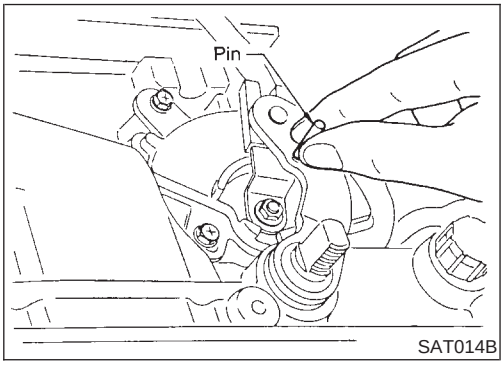

d. Tighten bolts while inserting 4.0 mm (0.157 in) dia. pin vertically into locating holes in PNP switch and manual shaft.

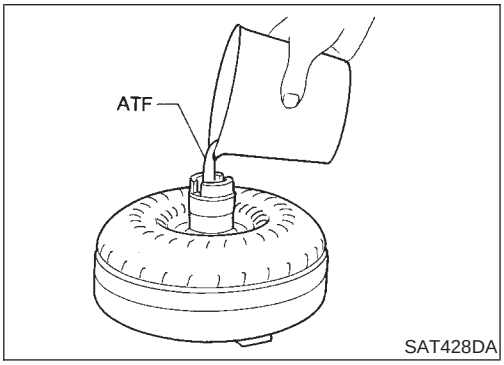

12. Install torque converter.
a. Pour ATF into torque converter.
- **Approximately 2 liters (1-3/4 Imp qt) of fluid are required for a new torque converter.**
- **When reusing old torque converter, add the same amount of fluid as was drained.**

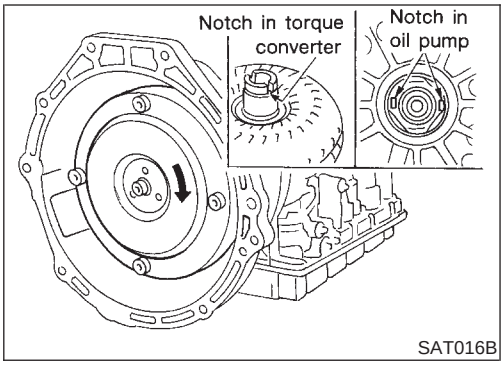

b. Install torque converter while aligning notches and oil pump.

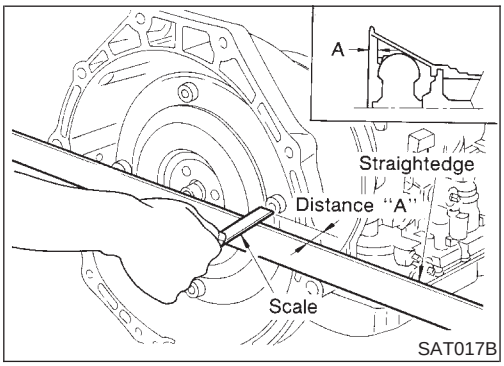

c. Measure distance A to check that torque converter is in proper position.

Distance "A":

23.5 mm (0.925 in) or more

A/T Fluid Cooler

NMAT0251

COMPONENTS

NMAT0251S01

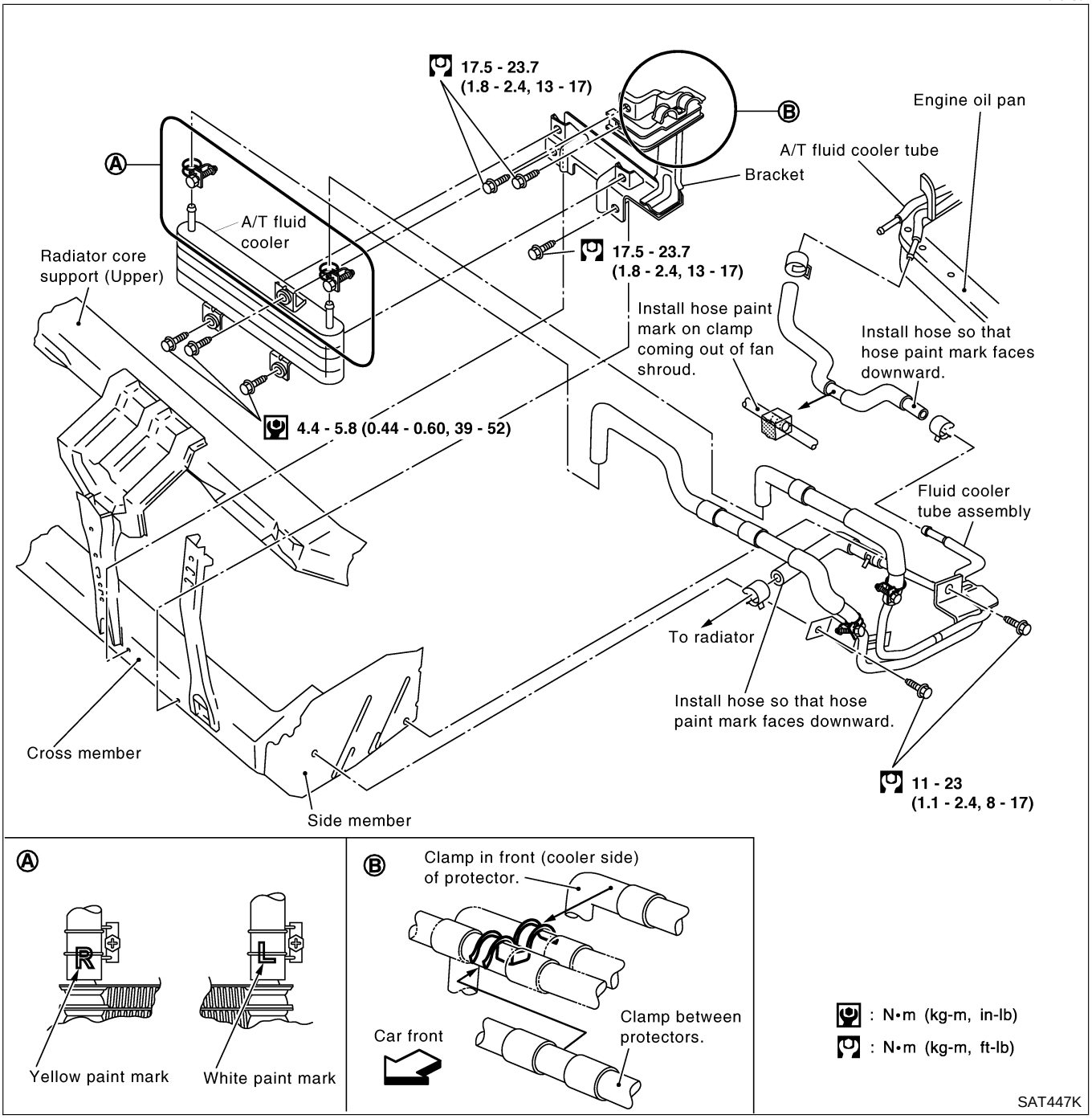

REMOVAL AND INSTALLATION

NMAT0251S02

1. Disconnect fluid hoses from fluid cooler unit.
2. Remove fluid cooler unit.
3. Remove fluid cooler bracket.
4. Remove clips securing fluid hose (cooler unit to radiator) and loosen hose clamps, then remove the fluid hose.
5. Loosen clamps securing fluid hose (A/T assembly to fluid cooler), then remove the fluid hose.

- Reverse the removal procedure to install the A/T fluid cooler unit. Refer to the component drawing and specified tightening torque.

- Check A/T fluid level and refill if necessary. Refer to "Checking A/T Fluid", AT-9.

General Specifications

NMAT0160

Applied model		SR20DET
		2WD
Automatic transmission model		RE4R01A
Transmission model code number		4EX72
Stall torque ratio		2.0 : 1
Transmission gear ratio	1st	2.785
	2nd	1.545
	Top	1.000
	OD	0.694
	Reverse	2.272
Recommended fluid		Genuine Nissan ATF or equivalent*1
Fluid capacity		7.9ℓ (7 Imp qt)

*1: Refer to MA-8, “Fluids and Lubricants”.

Shift Schedule

NMAT0178

VEHICLE SPEED WHEN SHIFTING GEARS THROTTLE POSITION

NMAT0178S01

Throttle position	Vehicle speed km/h (MPH)						
	$D_1 \rightarrow D_2$	$D_2 \rightarrow D_3$	$D_3 \rightarrow D_4$	$D_4 \rightarrow D_3$	$D_3 \rightarrow D_2$	$D_2 \rightarrow D_1$	$1_2 \rightarrow 1_1$
Full throttle	55 - 59 (34 - 37)	108 - 116 (67 - 72)	182 - 192 (113 - 119)	176 - 186 (109 - 116)	103 - 111 (64 - 69)	40 - 44 (25 - 27)	46 - 50 (29 - 31)
Half throttle	45 - 49 (28 - 30)	88 - 94 (55 - 58)	146 - 154 (91 - 96)	87 - 95 (54 - 59)	39 - 45 (24 - 28)	10 - 14 (6 - 9)	46 - 50 (29 - 31)

VEHICLE SPEED WHEN PERFORMING AND RELEASING LOCK-UP

NMAT0178S02

Throttle position	Overdrive control switch [Shift position]	Vehicle speed km/h (MPH)	
		Lock-up “ON”	Lock-up “OFF”
Full throttle	ON [D_4]	127 - 135 (79 - 84)	122 - 130 (76 - 81)
	OFF [D_3]	91 - 99 (57 - 62)	86 - 94 (53 - 58)
Half throttle	ON [D_4]	127 - 135 (79 - 84)	122 - 130 (76 - 81)
	OFF [D_3]	91 - 99 (57 - 62)	86 - 94 (53 - 58)

Stall Revolution

NMAT0163

Stall revolution rpm	2,725 - 2,975

Line Pressure

NMAT0164

Engine speed rpm	Line pressure kPa (bar, kg/cm^2, psi)	
	D, 2 and 1 positions	R position
Idle	437 - 470 (4.46 - 4.79, 63.4 - 68.2)	676 - 715 (6.90 - 7.29, 98.0 - 103.7)
Stall	1,039 - 1,117 (10.60 - 11.39, 150.7 - 162.0)	1,480 - 1,558 (15.10 - 15.89, 214.6 - 225.9)

Return Springs

NMAT0165

Unit: mm (in)

Parts			Item		
			Part No.*	Free length	Outer diameter
Control valve	Upper body	Torque converter relief valve spring	31742-41X23	38.0 (1.496)	9.0 (0.354)
		Pressure regulator valve spring	31742-41X24	44.02 (1.7331)	14.0 (0.551)
		Pressure modifier valve spring	31742-41X19	31.95 (1.2579)	6.8 (0.268)
		Accumulator control valve spring	—	—	—
		Shuttle shift valve D spring	31762-41X01	25.0 (0.984)	7.0 (0.276)
		4-2 sequence valve spring	31756-41X00	29.1 (1.146)	6.95 (0.2736)
		Shift valve B spring	31762-41X01	25.0 (0.984)	7.0 (0.276)
		4-2 relay valve spring	31756-41X00	29.1 (1.146)	6.95 (0.2736)
		Shift valve A spring	31762-41X01	25.0 (0.984)	7.0 (0.276)
		Overrun clutch control valve spring	31762-41X03	23.6 (0.929)	7.0 (0.276)
		Overrun clutch reducing valve spring	31742-41X20	32.5 (1.280)	7.0 (0.276)
		Shuttle shift valve S spring	31762-41X04	51.0 (2.008)	5.65 (0.2224)
		Pilot valve spring	31742-41X13	25.7 (1.012)	9.0 (0.354)
		Torque converter clutch control valve spring	31742-41X22	18.5 (0.728)	13.0 (0.512)
	Lower body	Modifier accumulator valve spring	31742-27X70	31.4 (1.236)	9.8 (0.386)
		1st reducing valve spring	31756-41X05	25.4 (1.000)	6.75 (0.2657)
		3-2 timing valve spring	31742-41X06	23.0 (0.906)	6.7 (0.264)
		Servo charger valve spring	31742-41X06	23.0 (0.906)	6.7 (0.264)
Reverse clutch		1 pc	31505-41X07	—	—
High clutch		10 pcs	31521-41X03 (Assembly)	24.2 (0.9528)	11.6 (0.457)
Forward clutch (Overrun clutch)		20 pcs	31521-41X04 (Assembly)	35.77 (1.4083)	9.7 (0.382)
Low & reverse brake		18 pcs	31655-41X00 (Assembly)	22.3 (0.878)	11.2 (0.441)
Band servo		Spring A	31605-41X05	45.6 (1.795)	34.3 (1.350)
		Spring B	31605-41X00	53.8 (2.118)	40.3 (1.587)
		Spring C	31605-41X01	29.7 (1.169)	27.6 (1.087)
Accumulator		Accumulator A	31605-41X02	43.0 (1.693)	18.0 (0.709)
		Accumulator B	31605-41X10	66.0 (2.598)	20.0 (0.787)
		Accumulator C	31605-41X09	45.0 (1.772)	29.3 (1.154)
		Accumulator D	31605-41X06	58.4 (2.299)	17.3 (0.681)

*: Always check with the Parts Department for the latest parts information.

Accumulator O-ring

NMAT0166

Accumulator	Diameter mm (in)			
	A	B	C	D
Small diameter end	29 (1.14)	32 (1.26)	45 (1.77)	29 (1.14)
Large diameter end	45 (1.77)	50 (1.97)	50 (1.97)	45 (1.77)

Clutches and Brakes

NMAT0167

REVERSE CLUTCH

NMAT0167S01

Code number		4EX72	
Number of drive plates		2	
Number of driven plates		2	
Thickness of drive plate mm (in)	Standard	1.90 - 2.05 (0.0748 - 0.0807)	
	Wear limit	1.80 (0.0709)	
Clearance mm (in)	Standard	0.5 - 0.8 (0.020 - 0.031)	
	Allowable limit	1.2 (0.047)	
Thickness of retaining plate		Thickness mm (in)	Part number*
		4.8 (0.189)	31537-42X02
		5.0 (0.197)	31537-42X03
		5.2 (0.205)	31537-42X04
		5.4 (0.213)	31537-42X05
		5.6 (0.220)	31537-42X06

*: Always check with the Parts Department for the latest parts information.

HIGH CLUTCH

NMAT0167S02

Code number		4EX72	
Number of drive plates		5	
Number of driven plates		5	
Thickness of drive plate mm (in)	Standard	1.52 - 1.67 (0.0598 - 0.0657)	
	Wear limit	1.40 (0.0551)	
Clearance mm (in)	Standard	1.8 - 2.2 (0.071 - 0.087)	
	Allowable limit	3.2 (0.126)	
Thickness of retaining plate		Thickness mm (in)	Part number*
		3.4 (0.134)	31537-41X71
		3.6 (0.142)	31537-41X61
		3.8 (0.150)	31537-41X62
		4.0 (0.157)	31537-41X63
		4.2 (0.165)	31537-41X64
		4.4 (0.173)	31537-41X65
		4.6 (0.181)	31537-41X66
		4.8 (0.189)	31537-41X67

*: Always check with the Parts Department for the latest parts information.

FORWARD CLUTCH

NMAT0167S03

Code number		4EX72	
Number of drive plates		7	
Number of driven plates		7	
Thickness of drive plate mm (in)	Standard	1.52 - 1.67 (0.0598 - 0.0657)	
	Wear limit	1.40 (0.0551)	
Clearance mm (in)	Standard	0.35 - 0.75 (0.0138 - 0.0295)	
	Allowable limit	2.15 (0.0846)	
Thickness of retaining plate		Thickness mm (in)	Part number*
		4.6 (0.181)	31537-42X13
		4.8 (0.189)	31537-42X14
		5.0 (0.197)	31537-42X15
		5.2 (0.205)	31537-4AX00
		5.4 (0.213)	31537-4AX01
		5.6 (0.220)	31537-4AX02
		5.8 (0.228)	31537-4AX03

*: Always check with the Parts Department for the latest parts information.

OVERRUN CLUTCH

NMAT0167S04

Code number		4EX72	
Number of drive plates		3	
Number of driven plates		5	
Thickness of drive plate mm (in)	Standard	1.90 - 2.05 (0.0748 - 0.0807)	
	Wear limit	1.80 (0.0709)	
Clearance mm (in)	Standard	1.0 - 1.4 (0.039 - 0.055)	
	Allowable limit	2.0 (0.079)	
Thickness of retaining plate		Thickness mm (in)	Part number*
		4.2 (0.165)	31537-41X80
		4.4 (0.173)	31537-41X81
		4.6 (0.181)	31537-41X82
		4.8 (0.189)	31537-41X83
		5.0 (0.197)	31537-41X84

*: Always check with the Parts Department for the latest parts information.

LOW & REVERSE BRAKE

NMAT0167S05

Code number		4EX72	
Number of drive plates		3 + 5	
Number of driven plates		8	
Thickness of drive plate mm (in)	Standard	1.52 - 1.67 (0.0598 - 0.0657)	
	Wear limit	1.40 (0.0551)	
Clearance mm (in)	Standard	0.8 - 1.1 (0.031 - 0.043)	
	Allowable limit	2.7 (0.1063)	
Thickness of retaining plate		Thickness mm (in)	Part number*
		7.6 (0.299)	31667-41X07
		7.8 (0.307)	31667-41X08
		8.0 (0.315)	31667-41X00
		8.2 (0.323)	31667-41X01
		8.4 (0.331)	31667-41X02
		8.6 (0.339)	31667-41X03
		8.8 (0.346)	31667-41X04
		9.0 (0.354)	31667-41X05
		9.2 (0.362)	31667-41X06
		9.4 (0.370)	31667-41X09
		9.6 (0.378)	31667-41X10

*: Always check with the Parts Department for the latest parts information.

BRAKE BAND

NMAT0167S06

Anchor end bolt nut tightening torque	40 - 51 N·m (4.1 - 5.2 kg-m, 30 - 38 ft-lb)
Anchor end bolt tightening torque	4 - 6 N·m (0.4 - 0.6 kg-m, 35 - 52 in-lb)
Number of returning revolution for anchor end bolt	2.5

Oil Pump and Low One-way Clutch

NMAT0168

Unit: mm (in)

Oil pump clearance	Cam ring — oil pump housing	Standard	0.01 - 0.024 (0.0004 - 0.0009)
	Rotor, vanes and control piston — oil pump housing	Standard	0.03 - 0.044 (0.0012 - 0.0017)
Seal ring clearance		Standard	0.10 - 0.25 (0.0039 - 0.0098)
		Allowable limit	0.25 (0.0098)

Total End Play

NMAT0169

Total end play "T_1"	0.25 - 0.55 mm (0.0098 - 0.0217 in)	
Thickness of oil pump cover bearing race	Thickness mm (in)	Part number*
	0.8 (0.031)	31435-41X01
	1.0 (0.039)	31435-41X02
	1.2 (0.047)	31435-41X03
	1.4 (0.055)	31435-41X04
	1.6 (0.063)	31435-41X05
	1.8 (0.071)	31435-41X06
	2.0 (0.079)	31435-41X07

*: Always check with the Parts Department for the latest parts information.

Reverse Clutch Drum End Play

NMAT0170

Reverse clutch drum end play "T_2"	0.55 - 0.90 mm (0.0217 - 0.0354 in)	
Thickness of oil pump thrust washer	Thickness mm (in)	Part number*
	0.9 (0.035)	31528-21X01
	1.1 (0.043)	31528-21X02
	1.3 (0.051)	31528-21X03
	1.5 (0.059)	31528-21X04
	1.7 (0.067)	31528-21X05
	1.9 (0.075)	31528-21X06

*: Always check with the Parts Department for the latest parts information.

Removal and Installation

NMAT0171

Manual control linkage	Number of returning revolutions for lock nut	2
	Lock nut tightening torque	11 - 14 N·m (1.1 - 1.5 kg-m, 8 - 10 ft-lb)
Distance between end of converter housing and torque converter		23.5 mm (0.925 in) or more

NOTES