Serve with whole heart

Satisfaction accompanies the whole way

Maintenance manual

Model CYQD32 Series Diesel Engine

Dongfeng Chaoyang Diesel engine Co. LTD.

PDF 文件使用 "pdfFactory Pro" 试用版本创建 www.fineprint.cn

Foreword

CYQD 32 series diesel engine is a product with international advanced level. The technology was introduced from Nissan Diesel Engine Automobile Individual Plant by our Company. It can equip with 1-2 tons light-duty truck, light-duty bus, pick-up, jeep, army vehicle, cross-country vehicle and business vehicle and ect.

According to the performance, at present CYQD32 series diesel engine mainly includes CYQD32, CYQD32EGR, CYQD32T, CYQD32Ti four models. And on the base of it, it also has more than ten match deformation, such as QD32-1B 、QD32EGR-1A 、QD32T-2A、QD32Ti-1A.

The series diesel engine serial number, which at the front of "__" , expresses essential configuration and performance, which at the back of "__" expresses equipping deformation.

In order to make diesel engine often keep good technology state, and convenient for customer's maintenance and repairing. So we wrote the manual especially.

Because the series diesel engine is with advanced "general-purpose, series, and standard" level, the manual can be applied for the serial all the models.

The data and explanation which the manual supplied depending on the existing the products. With the technology developing and

PDF 文件使用 "pdfFactory Pro" 试用版本创建 www.fineprint.cn

according to the customer's requirement, the configuration will continue to perfect. So some contents may be unconformity future productions, and please customers notice and take care of the new manual publishing.

PDF 文件使用 "pdfFactory Pro" 试用版本创建 www.fineprint.cn

Catalogue

I. Summary

1. The main data and brief specification of diesel engine

2 . The main performance and outline dimension of diesel Engine

3. Indication symbol and meaning

II. Outer part disassembly and assemble

III. Inner part disassembly and assemble

IV. Diesel engine maintenance, checking and adjusting

V. Basic parts disassemble and reassemble

1. Rocker-arm shaft conjunction

2. Cylinder head and valves

3. Piston connection conjunction assembly

VI. Basic parts checking and maintenance

VII. Accessory parts disassembly and checking, repairing and adjusting

1. Lubrication system

1) Pressure lubrication system abridged drawing

2) Piston cooling injection nozzle

3) Oil filter

4) Oil cooler

2. Injection pump

PDF 文件使用 "pdfFactory Pro" 试用版本创建 www.fineprint.cn

3. Inlet preheating system

4. EGR system（CYQD32EGR）

5. Turbocharger charger （CYQD32T、CYQD32Ti）

PDF 文件使用 "pdfFactory Pro" 试用版本创建 www.fineprint.cn

1. The main technical parameter and specification of diesel engine

Model / item	CYQD32	CYQD32EGR	CYQD32T	CYQD32Ti
Diesel engine type	Vertical, in-line, water-cool, four-strokes			
Cylinder No.— bore x stroke	4 --99.2x102			
Displacement（L）	3.153			
Compression ratio	22：1			
Cylinder bush	NO			
Firing order	1—3—4—2			
Inlet and exhaust valves clearance	0.35			
Valve timing (according to the crankshaft angle)				
Intake valve opening (before T.D.C)	16°	16°	19°	19°
Intake valve closing (after B.D.C)	52°	52°	43°	43°
Exhaust valve opening (before B.D.C)	66°	66°	60°	60°
Exhaust valve closing (after T.D.C)	12°	12°	8°	8°
Injection type	VE distribution pump			
Injector type	Single hole axial needle, injection hole diameter 1mm			
Injector opening pressure	9800			
Lubrication method	Forced and splash			
Oil pump type	Gear type (driven by camshaft)			
Idling oil pressure（kPa）	98			
Oil filter	Spiral			
Oil cooler	Water cooing, plate case			
Lubrication oil capacity（L）	7L（including oil filter）			
Water pump type	Vane centrifugual			
Thermostat	Wax type opening at 76.5℃			
Air filter	Cyclone dust collecting paper type			
Starter	Electric control 12V、2.8Kw			
Generator	12V、60A			

PDF 文件使用 "pdfFactory Pro" 试用版本创建 www.fineprint.cn

1. The main performance and outside size of diesel engine

Item \ Model		CYQD32	CYQD32EGR	CYQD32T	CYQD32Ti
Rated power（kW）		75.8	75.8	80.9	96
Rated speed（r/min）		3600	3600	3600	3600
Max torque（N・m）		216	216	221	280
Max torque speed（r/min）		2200	2200	2000	2000
Max. idling steady speed（r/min）		4700±100			
Min. idling steady speed（r/min）		700±50、850±50（when the air conditioner opened）			
Outside size	Length（mm）	721	721	721	721
	Width（mm）	597	597	701	701
	Height（mm）	677	677	715	665

PDF 文件使用 "pdfFactory Pro" 试用版本创建 www.fineprint.cn

3、Idication symbol and meaning

disassembly

watching, checking

installing

measurement

disassembly

cleaning

reassembly

note

direction

tighten

justification

lubrication with oil

adjusting

lubrication with grease

PDF 文件使用 "pdfFactory Pro" 试用版本创建 www.fineprint.cn

II. Outside parts disassembly and assembly (1)

Outside parts disassembly and assembly (1)

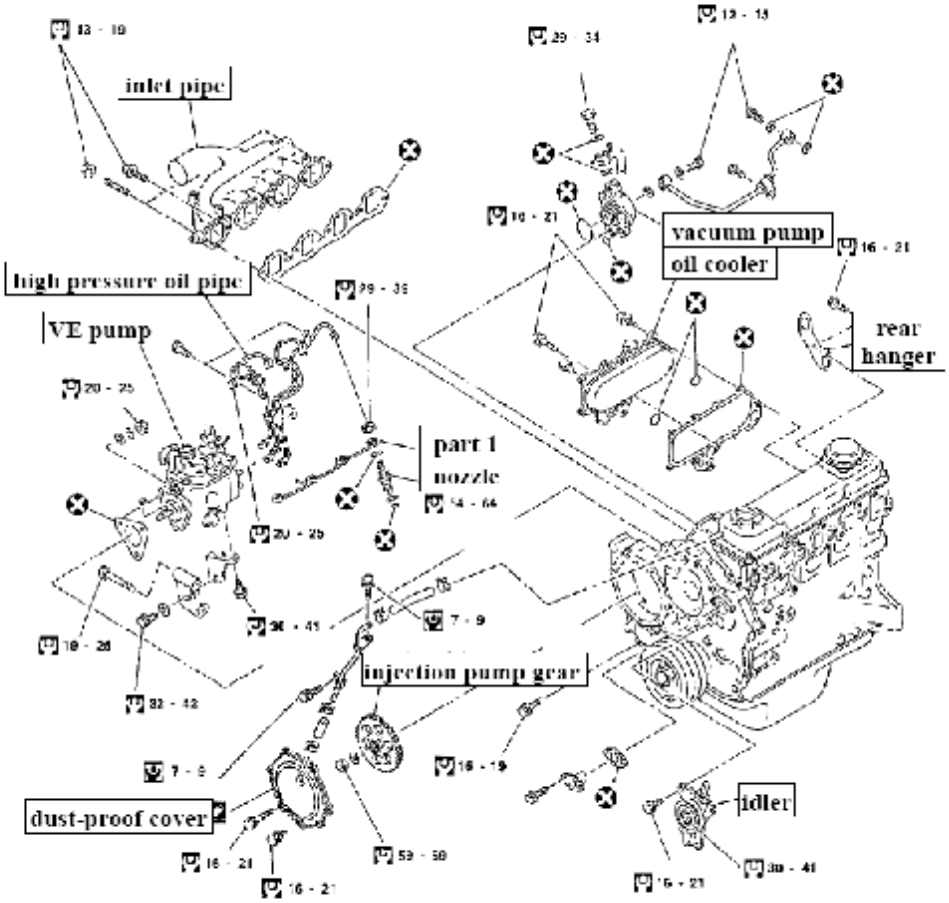

: Seal washer, Seal ring
: Tighten moment (small) N.m
: Tighten moment (big) N.m
: To use the sealing glue which recommended

Part 1: Small fuel return pipe

PDF 文件使用 "pdfFactory Pro" 试用版本创建 www.fineprint.cn

Outside parts disassembly and assembly (2)

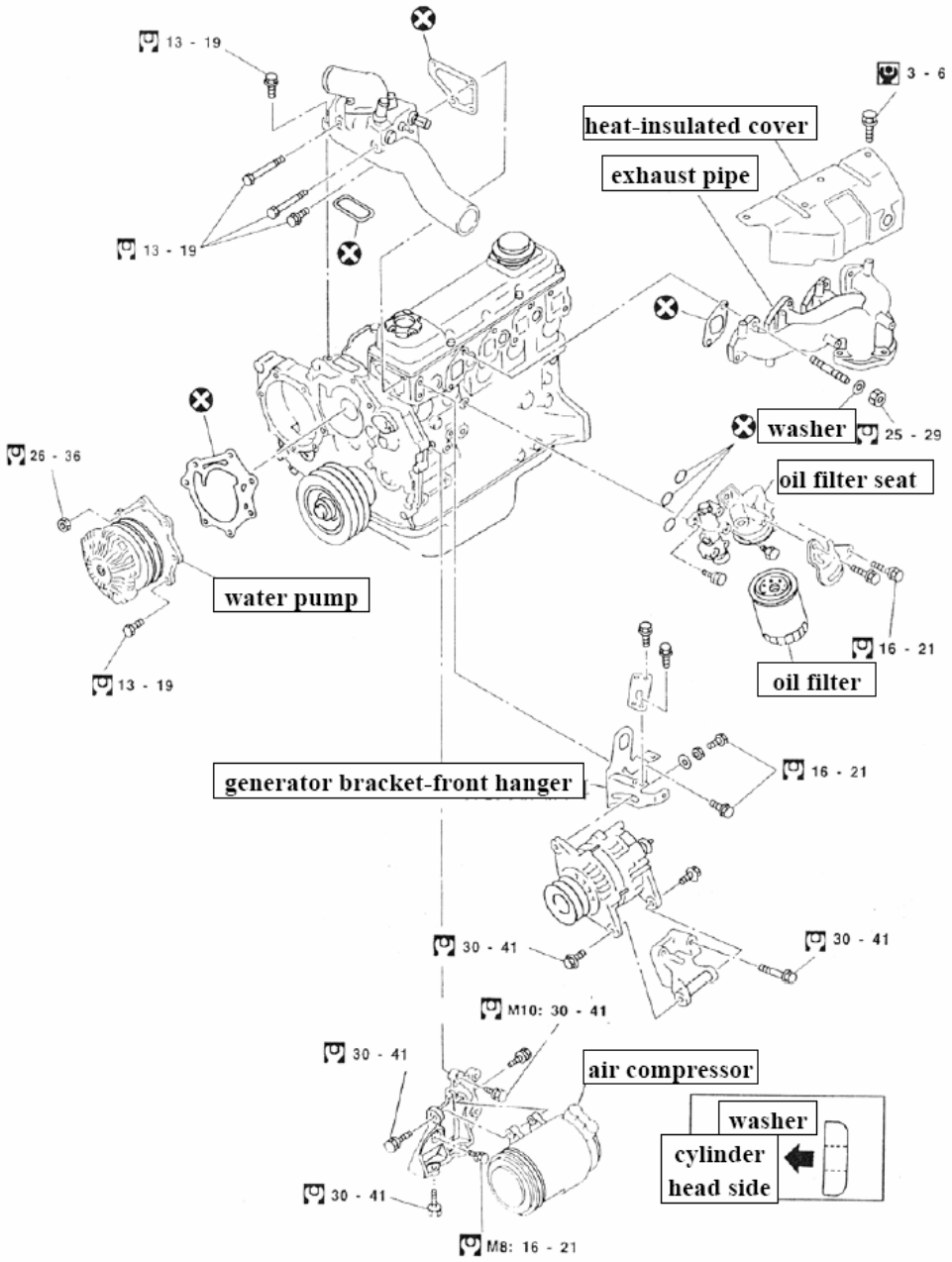

PDF 文件使用 "pdfFactory Pro" 试用版本创建 www.fineprint.cn

1.In principle, assembly order countered with disassembly order, in other words, first disassembly last assembly, last disassembly first assembly.

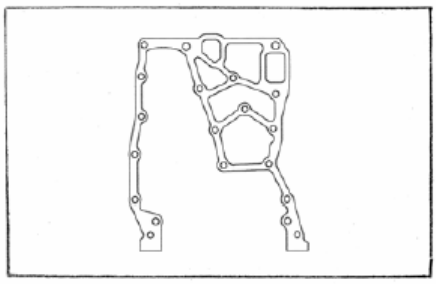

2. Note:

1) Seal gasket and plug

When installing, gear chamber cover, oil sump, high pressure fuel injection pump gear cover must be painted sealing glue, the other parts don't need to be painted sealing glue.

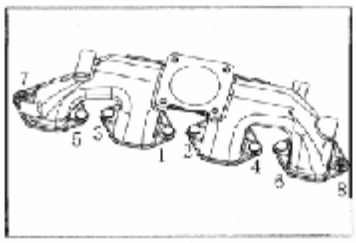

2) Inlet pipe

When assembly inlet pipe, to tighten screw bolt and nut according to the stipulated digital order and required torque.

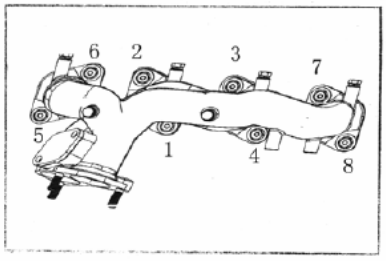

3) Exhaust pipe

When assembly exhaust pipe, to tighten nut according to the

PDF 文件使用 "pdfFactory Pro" 试用版本创建 www.fineprint.cn

stipulated digital order and required torque.

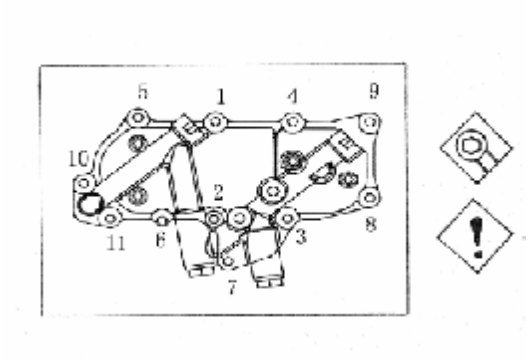

4) Oil cooler

To tighten screw bolt according to the stipulated digital order and required torque.

Note: Different length screw bolts don't make wrong.

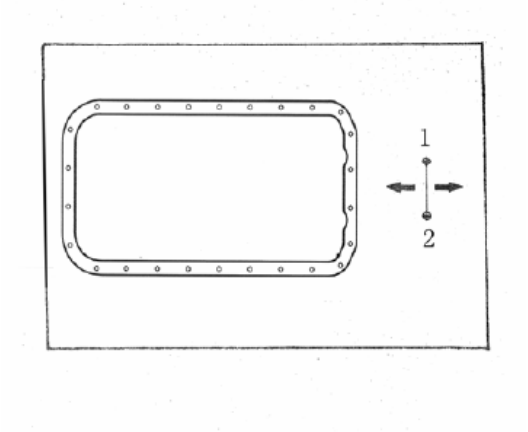

5) Oil sump

To tighten screw bolt according to the stipulated direction and required torque.

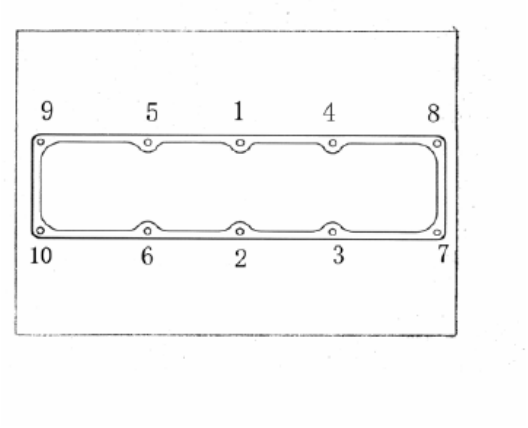

6) Cylinder head cover

To tighten screw bolt according to stipulated digital order and required torque.

PDF 文件使用 "pdfFactory Pro" 试用版本创建 www.fineprint.cn

III. Inner parts disassembly and assembly (cylinder -block)

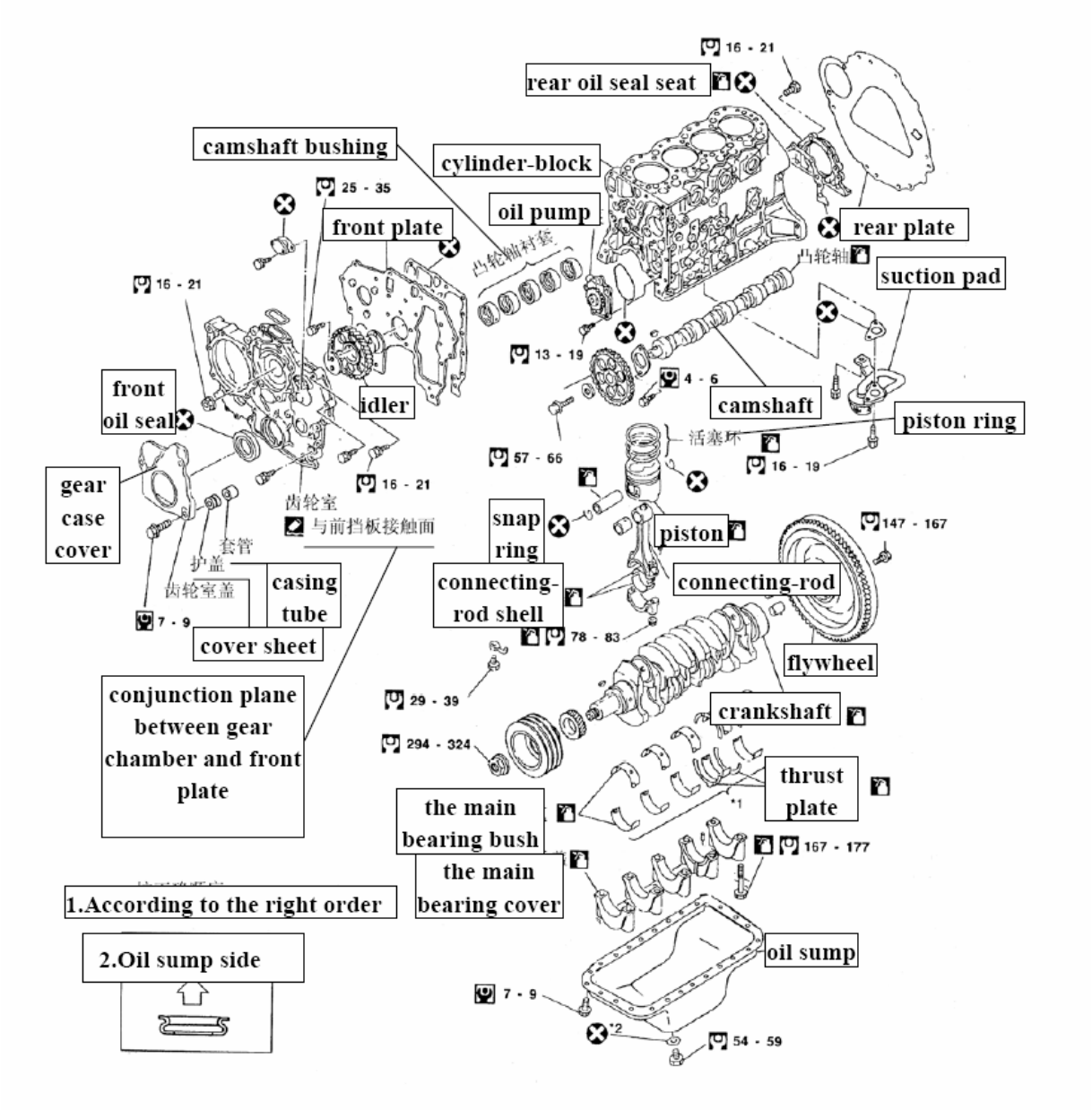

Seal gasket，seal ring

Tightening torque [big] N.m

Tighten torque matrix [small] N.m

To paint oil for lubrication

To use seal glue which recommended.

PDF 文件使用 "pdfFactory Pro" 试用版本创建 www.fineprint.cn

III. Inner parts disassembly and assembly (cylinder –head)

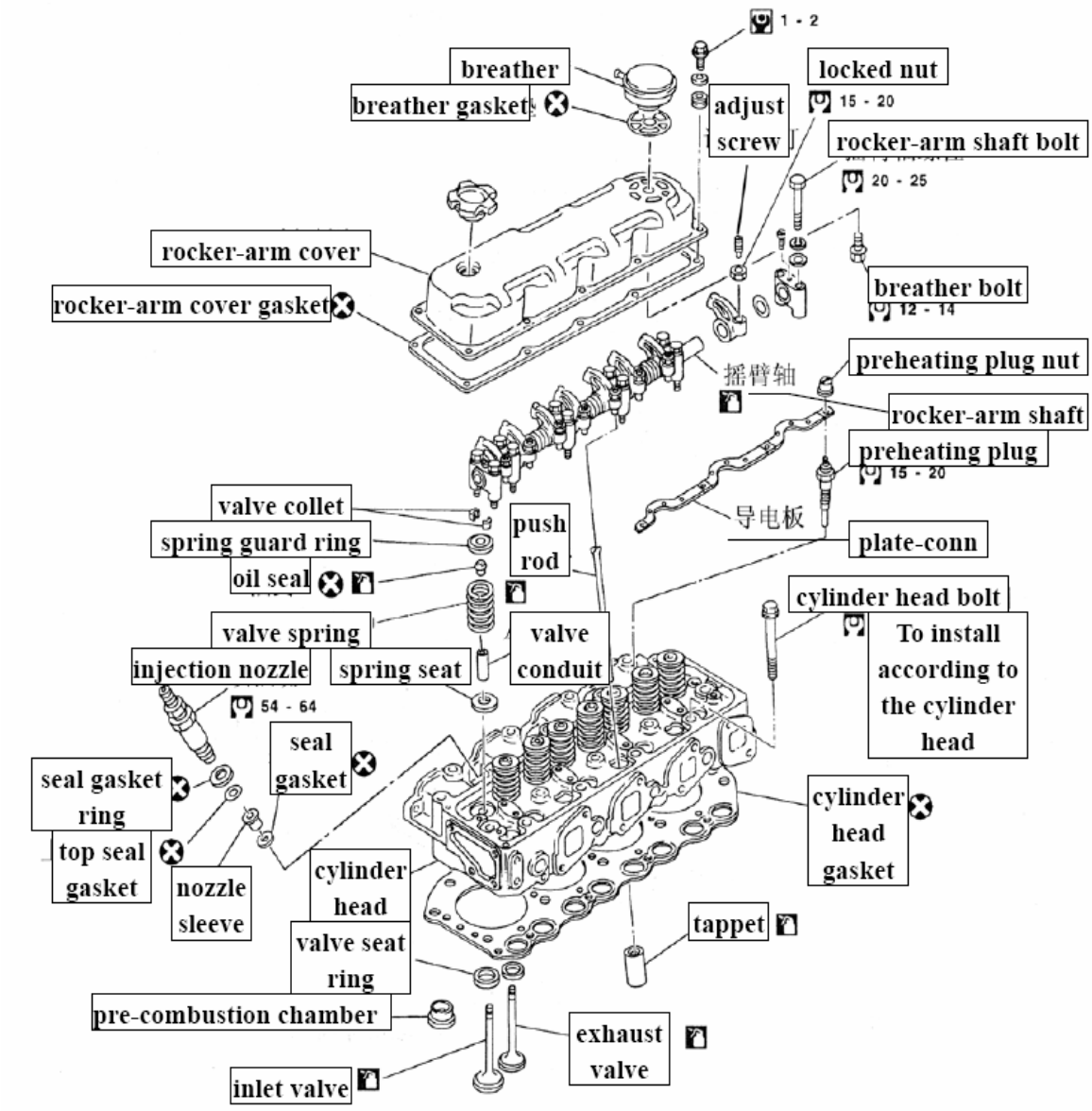

Seal gasket，seal ring

Tightening torque [big] N.m

Tighten torque matrix [small] N.m

To paint oil for lubrication

PDF 文件使用 "pdfFactory Pro" 试用版本创建 www.fineprint.cn

1.In principle, assembly order countered with disassembly order, in other words, first disassembly last assembly, last disassembly first assembly.

2.When assembly, every moving plane of union must add just the right amount grease (oil).

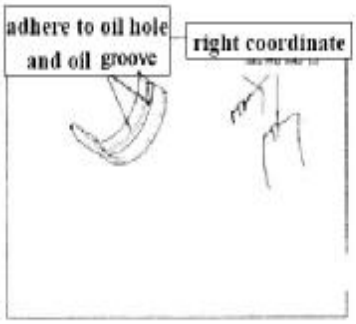

1) The main bearing bush

To make the main bearing bush locating lip insert in the main bearing cover locating groove.

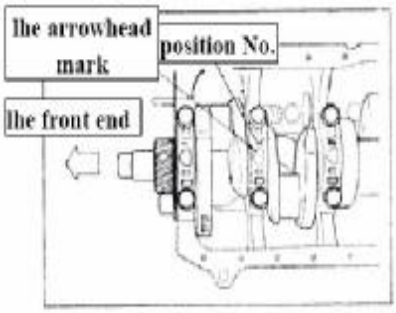

2) The main bearing cover

The arrow of the main bearing cover faced to the front of the engine. The number on the top of arrow is position No., the number on the bottom of arrowhead is batch No. and model.

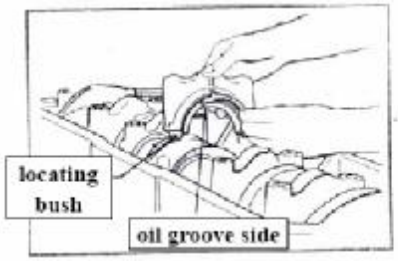

3) Crankshaft thrust plate

Oil grooves of upper and lower thrust plate faced to the sliding face of crankshaft. The locating convex end of lower thrust plane inserted in the location groove of main bearing cover.

PDF 文件使用 "pdfFactory Pro" 试用版本创建 www.fineprint.cn

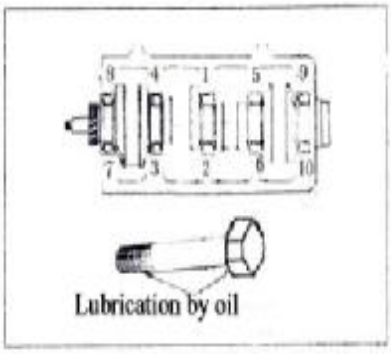

4) The main bearing bolt

To tighten to required torque by twice according to stipulated digital order.

Torque (N.m)	**167-177**

5) Piston connecting –rod group

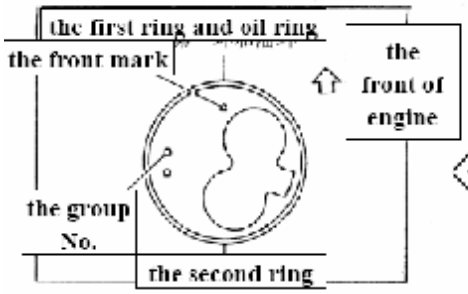

Piston ring opening lies to the position recommended.

The mark on the piston top faced to the front (or the inlet valve notch deviation the front end.)

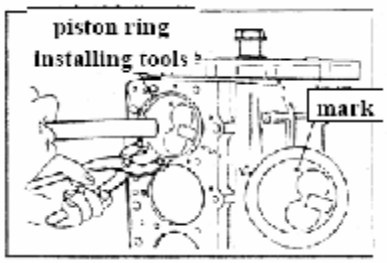

When install piston, to make the ring compress with the special tools.
The big end bolt position side of connecting-rod is matching No., the other side is quality group No..

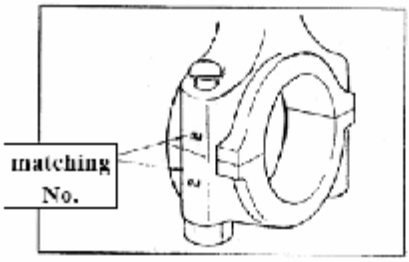

After connecting- rod bolt was painted oil, then assembly.
Torque (N.m) 78—83

6) Idler shaft

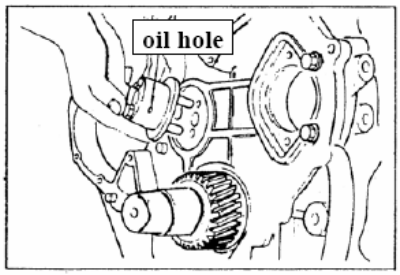

Oil hole faced to the top. After inserted in gear and press plate, then make bolt tighten.

PDF 文件使用 "pdfFactory Pro" 试用版本创建 www.fineprint.cn

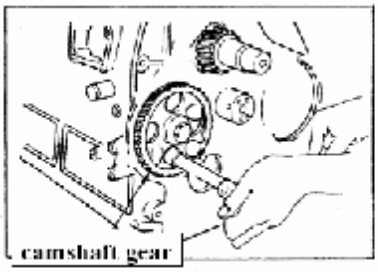

7) Camshaft thrust plate and gear

To tighten thrust plate bolt by the hole of camshaft gear.

After painted oil, to assembly camshaft gear compress bolt.

Torque (N.m)	**57—66**

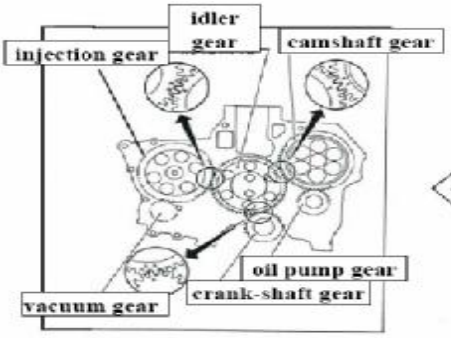

8）Timing mark

To install timing gear according to the timing mark symbol.

Idler press plate chamfer faced to outside.

9) Oil pump

After filling some oil, then assembly. When assembly, to tighten any bolt, we must rotate gear, and don't have inhibition.

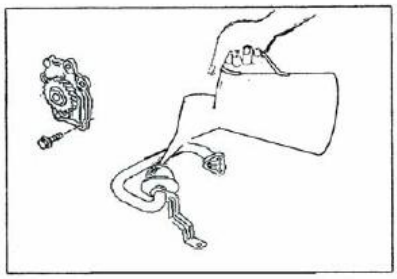

10) Flywheel case

After bolt was painted oil, then assemble.

Torque(N.m)	**60—70**

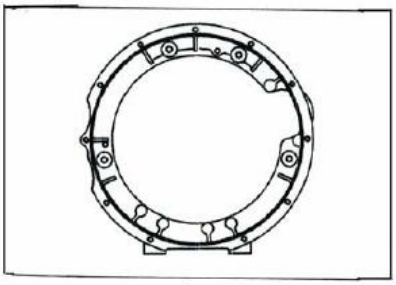

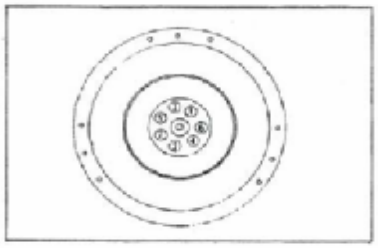

11) Flywheel

To make oil pain on thread of the bolt and the head end, then to tighten according to the stipulated digital order and required torque.

Torque (N.m)	**167—186**

PDF 文件使用 "pdfFactory Pro" 试用版本创建 www.fineprint.cn

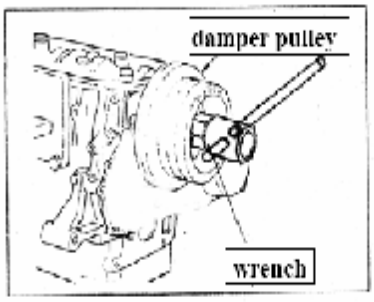

12) Start paw

To use oil paint on the thread, then tighten start paw to the stipulated torque with 6102.29.01 start paw wrench and 6102.29.02 wrench lever.

Torque (N.m)	**373—402**

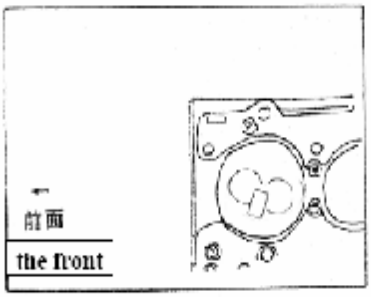

13) Cylinder block gasket

To make cylinder block gasket cylinder hole turned edge side faced to the cylinder block link surface.

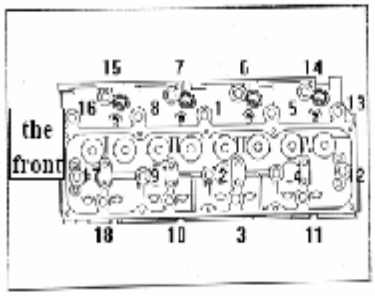

14) Cylinder-head

To make oil paint on the thread of the bolt and the head, then tighten by three steps according to the drawing digital order and torque.

Steps	first	second	third
Number	39-44	64-69	90±10
Units	N・m	N・m	Degree

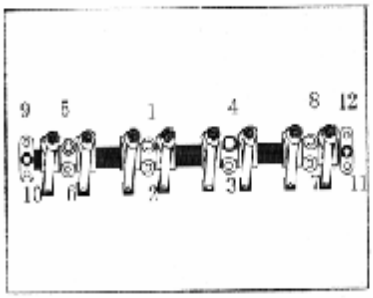

15) Rocker-arm shaft conjunction

To tighten bolt and nut according to the stipulated digital order.

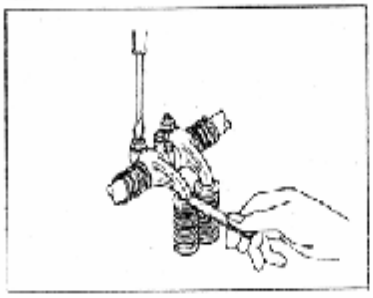

16) Valve clearance

To adjust the valve clearance with QD290.CN 101 valve clearance gauge.

Cooling valve clearance

Inlet, exhaust valve (mm)	**0.35**

PDF 文件使用 "pdfFactory Pro" 试用版本创建 www.fineprint.cn

IV. Diesel engine maintenance, checking and adjusting

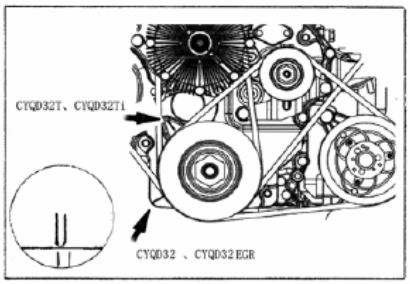

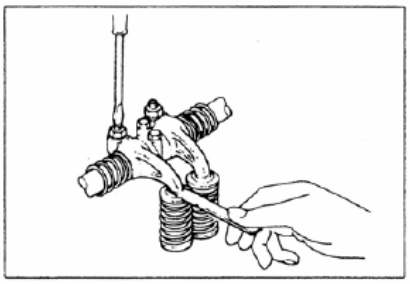

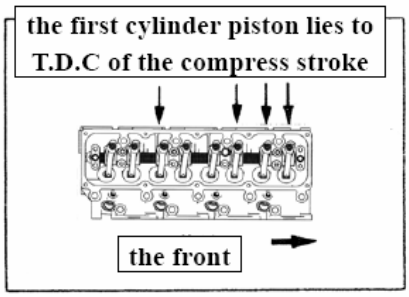

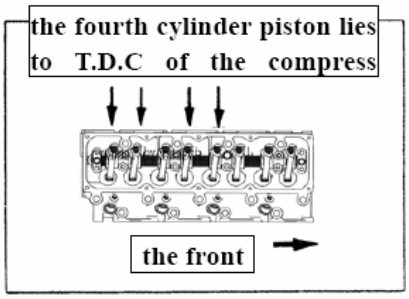

1. Valve clearance

To adjust valve clearance with QD290.CN 101 valve clearance gauge according to the following methods:

To rotate the crankshaft according to diesel engine rotation direction, make the T.D.C. calibration mark of the crankshaft be justification with timing calibration mark of sound-proof cover (CYQD32, CYQD32 EGR is justification with the bottom calibration mark, and CYQD32T, CYQD32Ti is justification with the top calibration mark), and make 1, 4 cylinder piston lie to T.D.C.. To shake the first cylinder inlet and exhaust valve rocker-arm with hands, if the both exist clearance, it showed the first cylinder piston lies to T.D.C of the compress stroke.

If the rocker-arm have no clearance, so it existed clearance between the fourth inlet valve and exhaust valve rocker-arm, and it showed the fourth cylinder piston lies to T.D.C of the compress stroke.

To finish adjusting all valve clearance by twice.

Cooling valve clearance:

Inlet, exhaust valve (mm)	0.35

PDF 文件使用 "pdfFactory Pro" 试用版本创建 www.fineprint.cn

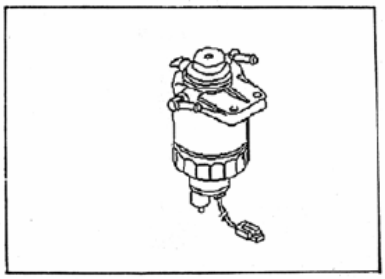

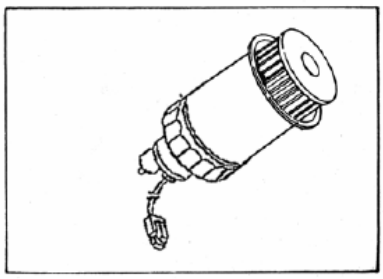

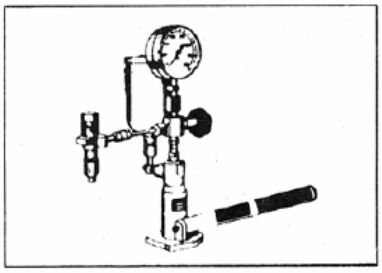

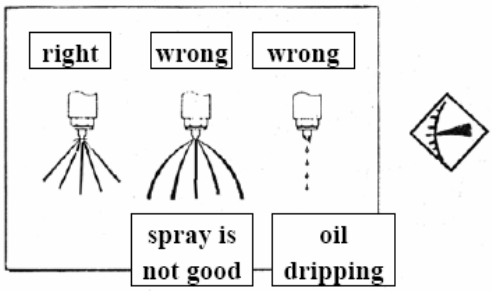

2. Fuel filter
Exhaust ponding

Regularly release lever lower plug of fuel filter and exhaust ponding in filter.

Clean or replace filter element
To disconnecting the filter case, and take out filter element, clean or replace fuel filter element (dismounting see fuel filter resolution and reassembly), if necessary, replace every seal parts.

3. Injector

Checking
To check injection oil pressure with injector test device.

Standard starting injection pressure (kPa)	**9800**

Adjusting
To observe and adjust injection fuel with injector test device.

PDF 文件使用 "pdfFactory Pro" 试用版本创建 www.fineprint.cn

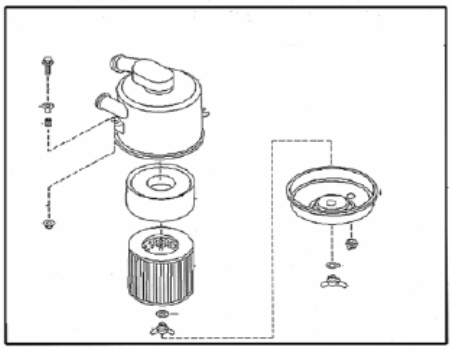

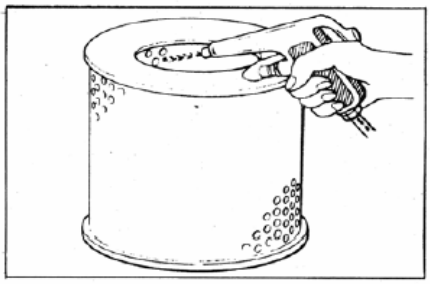

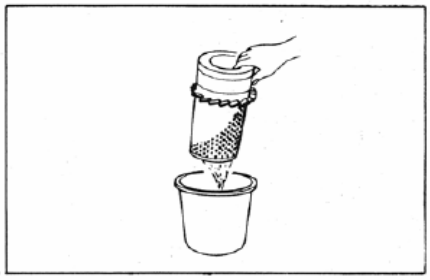

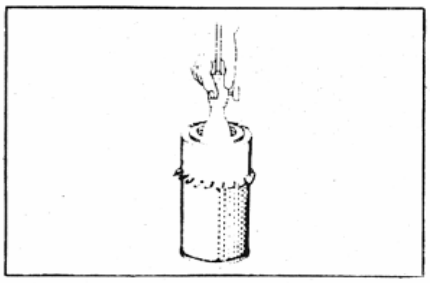

4. Air filter

To clear out dust deposit.

To take off ash pan and clean dust deposit.

Regularly carry out according to the practice.

To clean filter element

When the filter element was stained with dust, we must clean it. First, rotate filter element, in the same time, blow it from inner with compress air. And compress air pressure is not over 700Kpa.

With filter element indicating light, during the indicating light is on, we will carry out. Without filter element indicating light, regularly carry out according to the practice.

To wash filter element

When the filter element was stained with oil smoking, dilute with water important filter element abstergent detergent, then put filter element into about twenty minutes, then take it out and wash it with water, then blow it dry in the well ventilated air place or with electric fan. It can't be used until it was completely dry.

Checking

To put bulb in the filter element to illuminate, checking if it is damaged.

PDF 文件使用 "pdfFactory Pro" 试用版本创建 www.fineprint.cn

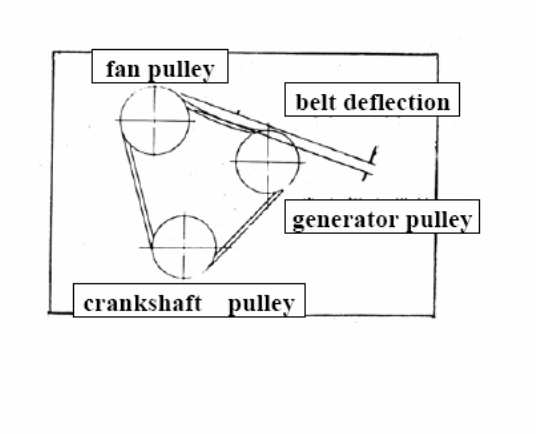

5. Fan (water pump) belt and air compressor belt

To add 39 N strength to the belt (single one), the deflection is 10-15mm.

PDF 文件使用 "pdfFactory Pro" 试用版本创建 www.fineprint.cn

V. Basic parts disassembly and reassembly

1、 Rocker-arm conjunction

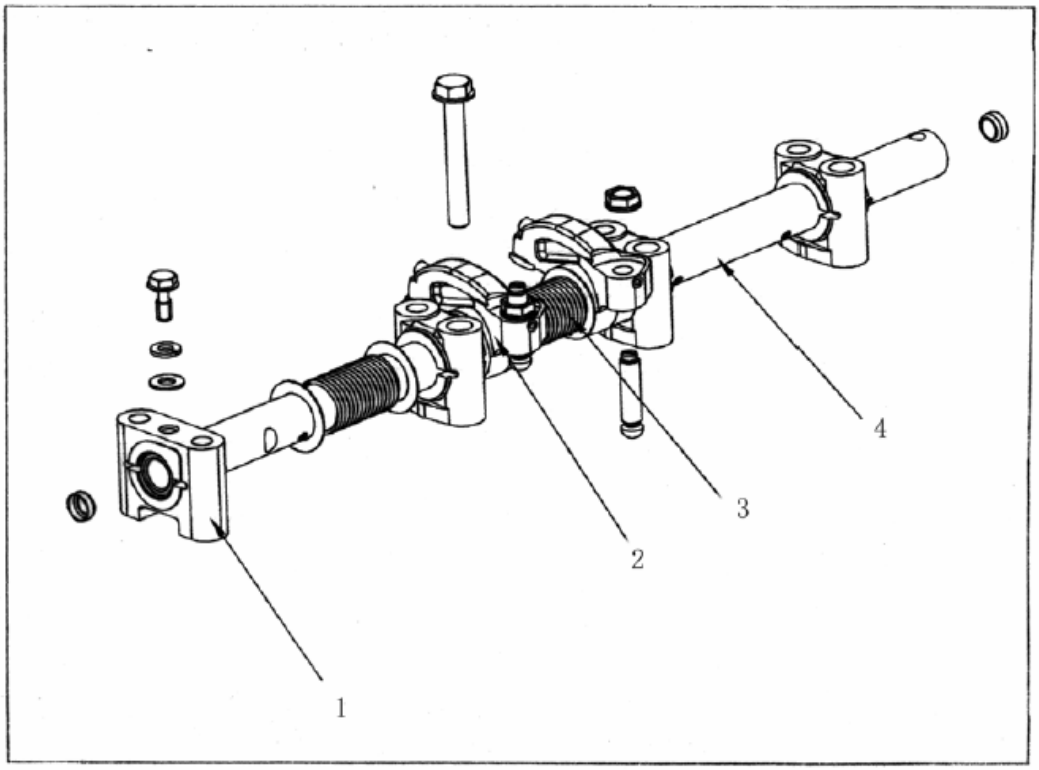

1、 Rocker-arm seat (front and back, middle two kinds six sets).
2、 Rocker-arm conjunction
3、 Spring
4、 Rocker-arm shaft

In principle, reassembly order countered with disassembly order.

1) Inlet and exhaust valve rocker-arm don't make wrong.
2) The middle rocker-arm seat oil hole face to down.

PDF 文件使用 "pdfFactory Pro" 试用版本创建 www.fineprint.cn

2、 Cylinder head and valve all parts

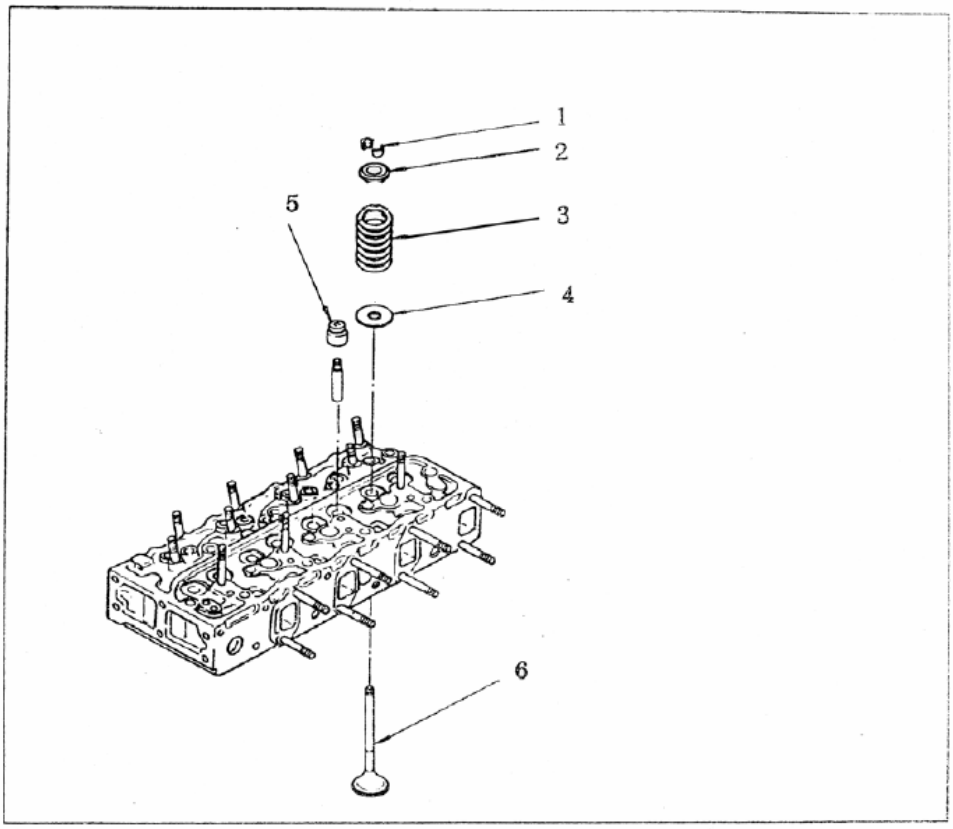

1、 Split collets
2、 Valve spring seat
3、 Valve spring
4、 Valve spring washer
5、 Valve seal ring
6、 Inlet and exhaust valves

In principle, mounting order countered with disassembly order.

PDF 文件使用 "pdfFactory Pro" 试用版本创建 www.fineprint.cn

When disassembly and install, please note following:

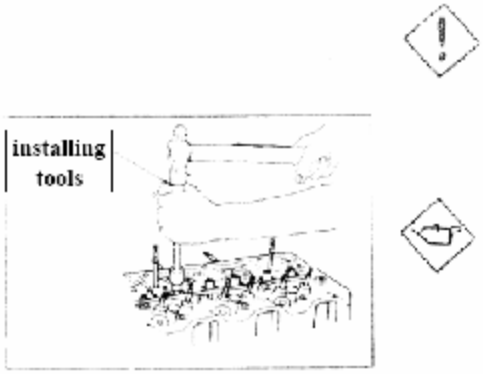

1) Valve seal ring

After lubricating valve seal ring with clean oil, then install it. And install it with special installing tools.

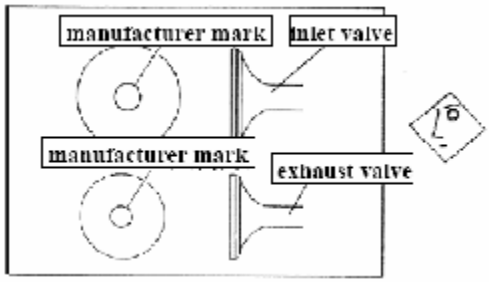

2) Inlet/ exhaust valve

Because the heads of inlet and exhaust valves are different, don't make wrong.

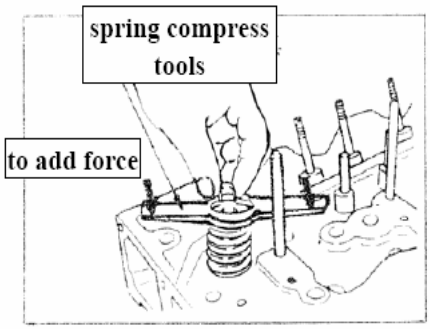

3) Split collets and valve spring seat

To disassembly and reassembly split collets and valve spring seat with 6102.29.03 disassembly valve tools.

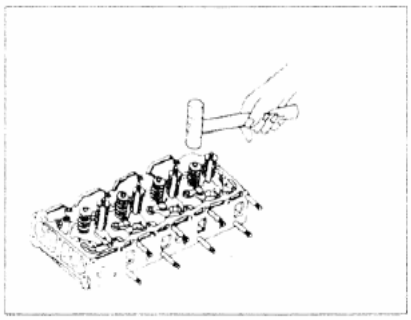

4) After installing split

Collets, to beat valve lever end with plastic hammer softly.

PDF 文件使用 "pdfFactory Pro" 试用版本创建 www.fineprint.cn

3. Piston connecting-rod assembly

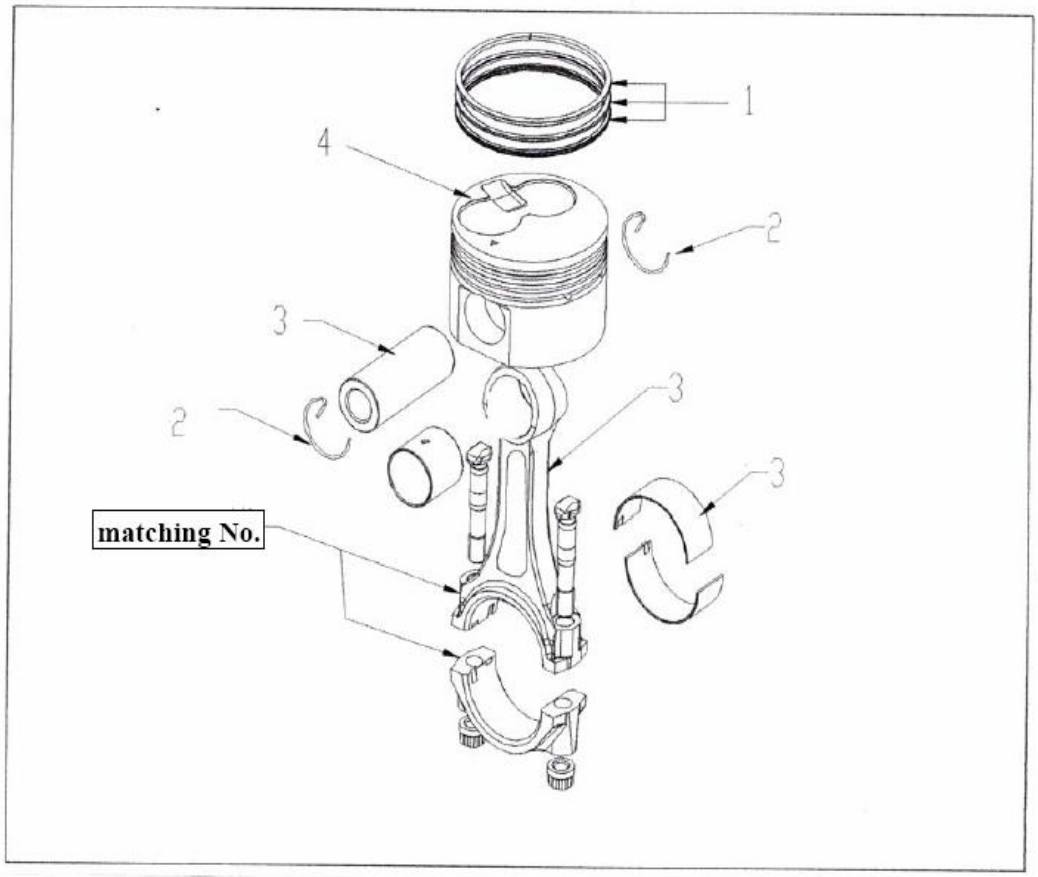

1、 Piston ring
2、 Check ring
3、 Piston pin, connecting-rod (and shell)
4、 Piston

In principle, mounting order countered with disassembly order.

PDF 文件使用 "pdfFactory Pro" 试用版本创建 www.fineprint.cn

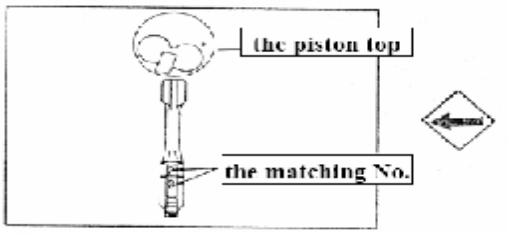

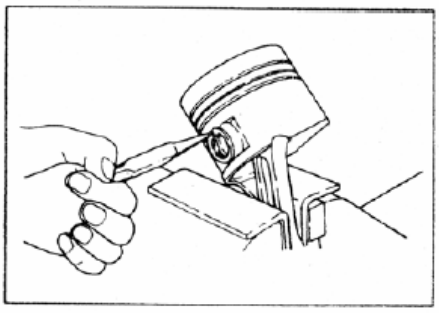

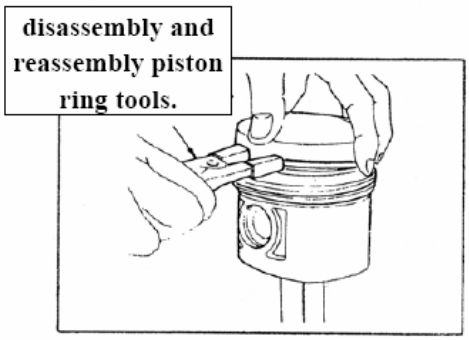

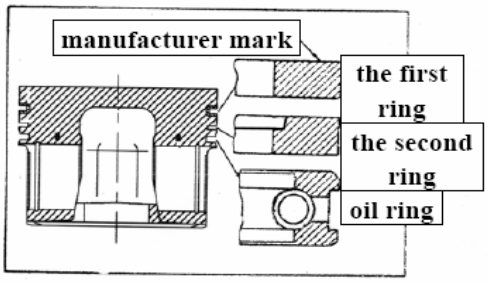

When disassembly and install, please note following:

1) Connecting-rod

When assembly, matching No. on connecting-rod body and cover must be at the same side.

Note: The piston top ▷ is the same direction with the convex words on connecting-rod body.

2）Check ring

To disassembly and reassembly check ring with special tools or clippers.

3）Piston ring

To disassembly and reassembly piston ring with special tools.

Don't make every ring install wrong. The first ring with the mark side faced up. The second ring inscribe groove faced up, oil ring bush spring interface be put the opposite of ring body opening, rotate smoothly and no inhibition.

PDF 文件使用 "pdfFactory Pro" 试用版本创建 www.fineprint.cn

VI. Basic parts checking and maintenance

When checking, if found wear, damage or the other abnormal phenomena, repair and replace according to the practice.

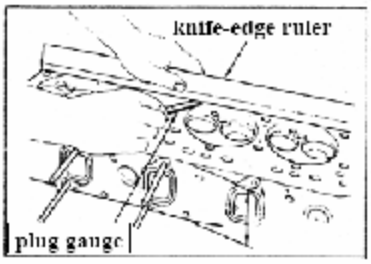

1 Cylinder-head bottom planeness and thickness

	Standard	Limit
Planeness	0-0.07	0.15
Thickness	90	89.7

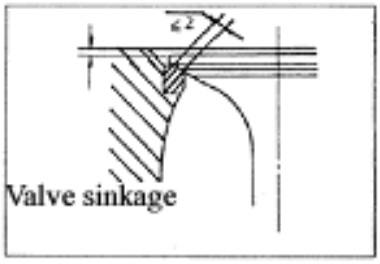

2.Inlet and exhaust valve sinkage

Standard	Limit
0.8-1.1	2.0

3. valve seat ring

1) Replace valve seat ring

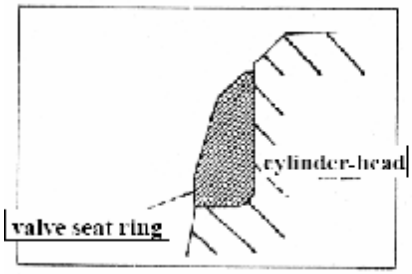

When valve inferior limit is over limit value, we must replace seat ring.

When disassembly valve seat ring, mustn't heat, otherwise will make bottom hole deformation.

When replace it, inlet valve seat ring don't enlarge bottom hole.

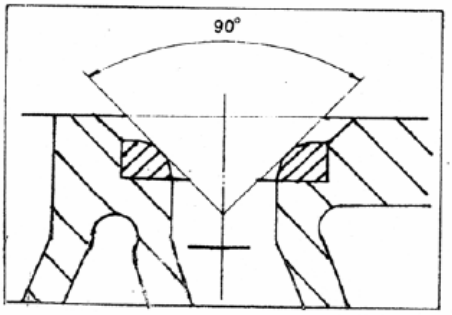

2) To insert valve seat ring

To completely clean out metal oxide and deposit carbon on valve seat ring hole surface of cylinder head, then press seat ring by pressure.

To cut down valve seat with 90 ° reamer, the conjunction width is 1.0-2.0 mm with valve head seat plane.

PDF 文件使用 "pdfFactory Pro" 试用版本创建 www.fineprint.cn

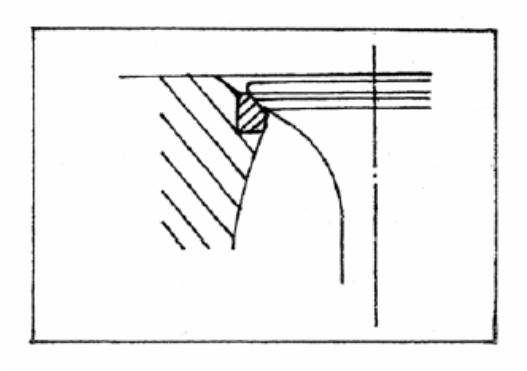

3) Air distribution valves and sealing checking

When we use new valve and new valve seat ring, we must ensure valve sinkage amount in the standard.

To clean the conjunction between valve and valve seat ring, and paint red lead red on the valve cane, and put the valve on the seat, then gently turn valve, contacting ring should not intermit, the width is 1-2 mm.

To install valve spring, and fill kerosene into inlet and exhaust passage, and ensure it will not leak, lasting for two minutes.

If existing problem, we should hinge valve seat ring again and grind valve and seat ring with abradant.

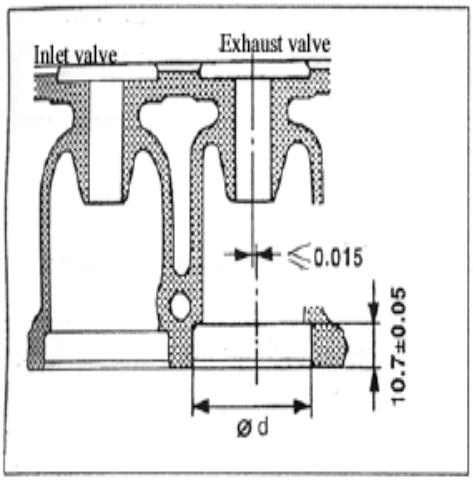

4) To replace and maintenance valve seat ring

If the exhaust valve sinkage is too big, we must be reference left drawing according to form dimension enlarge cylinder-head bottom hole.

Exceed stipulated value	Bottom hole diameter "D"
0.2	40.695 40.710
0.4	40.895-40.910

PDF 文件使用 "pdfFactory Pro" 试用版本创建 www.fineprint.cn

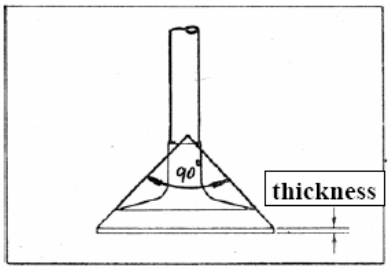

4. Valve and valve guide

1) Valve seal coning angle and head thickness Valve seal coning angle: 90°

Valve head thickness

Standard	Limit
1.5	1.0

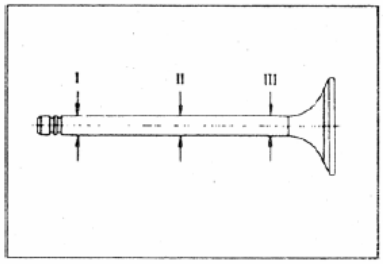

2) Valve lever diameter

	Standard
Inlet valve	Φ7.962—Φ7.977
Exhaust valve	Φ7.945—Φ7.960

3) Valve guide inner diameter

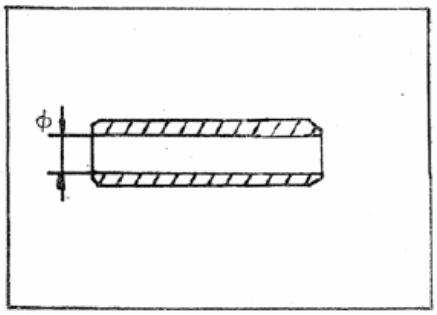

	Standard
Inlet valve guide	Φ8.000—Φ8.015
Exhaust valve guide	Φ8.000—Φ8.015

4) Clearance between valve lever and guide

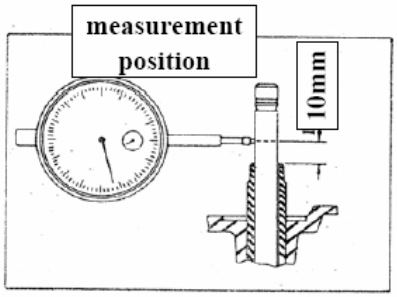

	Standard	Limit
Inlet valve	0.023-0.053	0.15
Exhaust valve	0.040-0.070	0.15

PDF 文件使用 "pdfFactory Pro" 试用版本创建 www.fineprint.cn

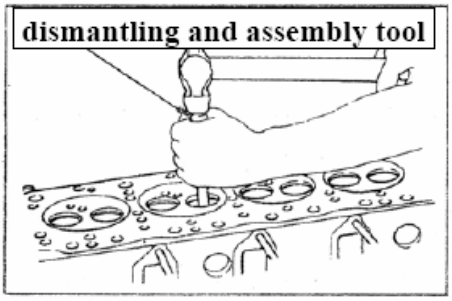

5) Replace valve guide

To dismantle valve guide with blanking tool and hammer.

To make valve guide install in cylinder-head guide hole with blanking tool and hammer.

The distance is 16 ±0.20 from the bottom of cylinder-head valve spring to valve guide top.

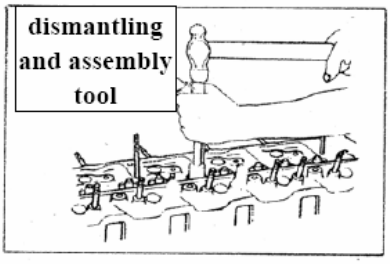

5、Cylinder-head gasket

"d" : Φ100.4

a. When only replacing the cylinder-head gasket, must be the same with the cylinder-head gasket group.

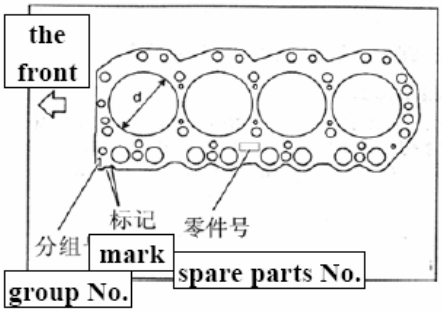

b.When replacing or maintenance cylinder-block, cylinder-head, piston, connecting-rod and crank-shaft, choose cylinder-head gasket according to the following:

(1) To measure piston protruding height

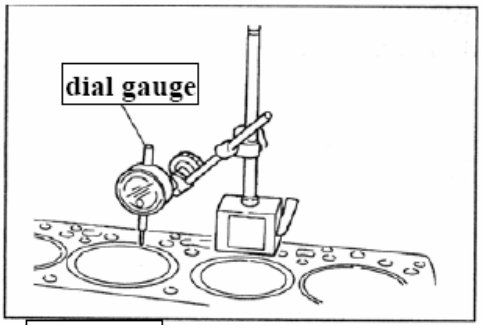

i. To measure two points on T.D.C piston top, see drawing

ii. Average value for two points is HL.

PDF 文件使用 "pdfFactory Pro" 试用版本创建 www.fineprint.cn

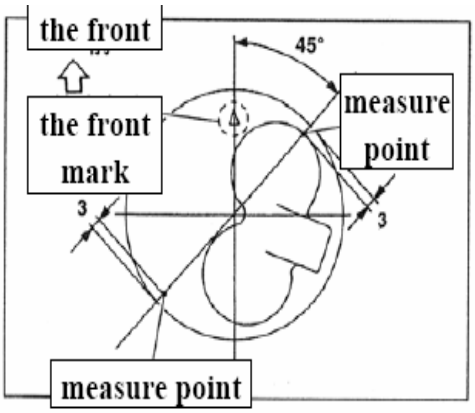

(2) To choose qualified cylinder gasket

According to max. protruding height of piston in four cylinders.

Piston average protruding height H_L	Thickness		Group No. and spare parts No.		Type
	Natural thickness	Compress thickness			
< 0.168	1.35	1.20	1	110441W 400	CYQD 32series
0.168-0.218	1.40	1.25	2	110441W 401	
> 0.218	1.45	1.30	3	110441W 402	

PDF 文件使用 "pdfFactory Pro" 试用版本创建 www.fineprint.cn

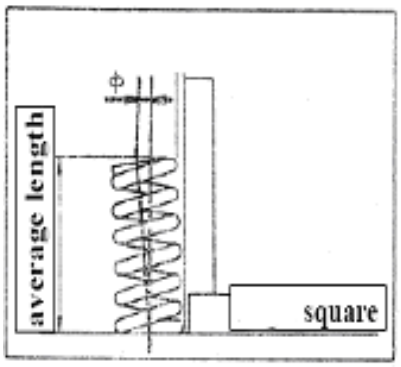

1) Spring length and perpendicularity

	Standard	Limit
Average length	53.4	48.5
perpendicularity	In 2.5 °	

2) Spring force

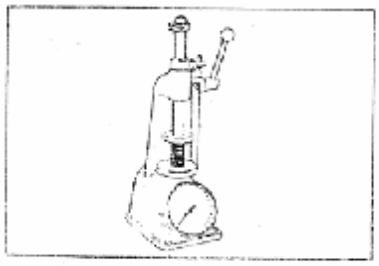

Height after compress (mm)	Standard (N)	Limit (N)
42.3	338.5	315

7. Tappet

1) To check tappet whether it existed any kinds of wear, damage and other abnormal phenomenon.

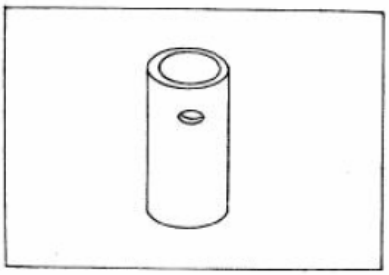

2) Tappet diameter

Standard	Limit
Φ 25.960— Φ 25.970	Φ 26.93

3) Tappet hole inner diameter

Standard	Limit
Φ 26.00— Φ 26.033	Φ 26.07

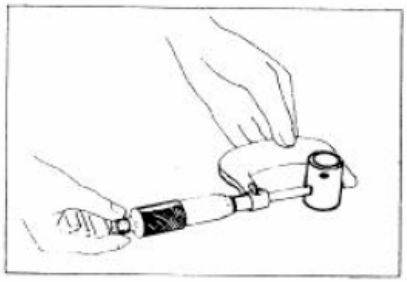

4) Clearance between tappet and tappet hole

Standard	Limit
0.03-0.013	0.20

PDF 文件使用 "pdfFactory Pro" 试用版本创建 www.fineprint.cn

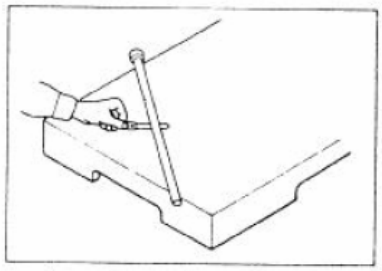

8. Push rod conjunction deviation of straightness

Generatrix deviation of straightness

Limit	**Φ 0.3**

9. Rocker-arm conjunction

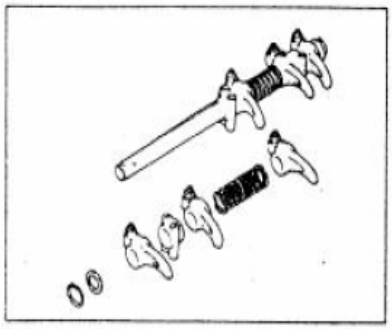

1) To check all disassembly parts, to see if there is any wear, damage and the other abnormal phenomenon.

2) Rocker-arm shaft diameter

Standard	Limit
Φ19.979-Φ20.000	Φ19.86

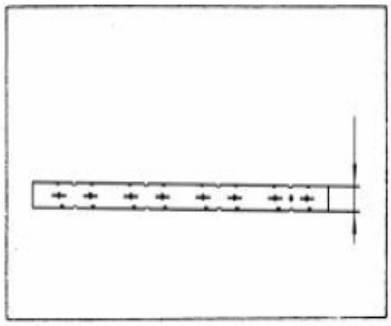

3) Rocker-arm conjunction inner diameter

Standard	Limit
Φ20.014-Φ20.035	Φ20.06

4) Clearance between rocker-arm and rocker –arm shaft

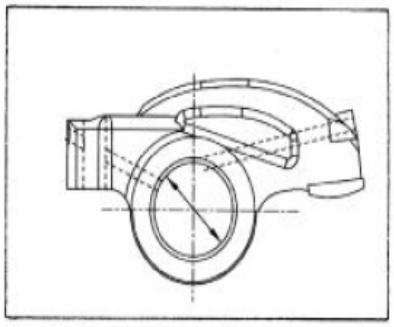

Standard	Limit
0.014-0.056	0.10

PDF 文件使用 "pdfFactory Pro" 试用版本创建 www.fineprint.cn

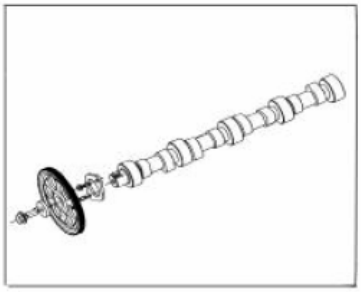

10. Camshaft all parts

1) To check all disassembly parts, to see if there is wear, damage or the other abnormal phenomenon.

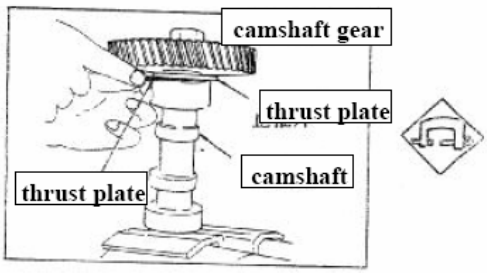

2) Camshaft axial clearance

Standard	Limit
0.08-0.28	0.4

There is abnormal phenomenon or side clearance is too big, we should replace gear.

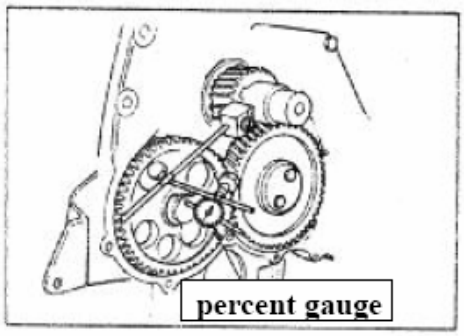

4) Camshaft journal

Standard	Limit
¢ $50_{-0.079}^{-0.60}$	¢ 55.6

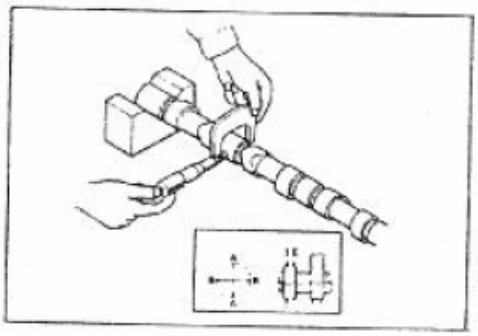

5) Camshaft bush (bearing) inner diameter

Standard	¢ 50~¢ 50.030

PDF 文件使用 "pdfFactory Pro" 试用版本创建 www.fineprint.cn

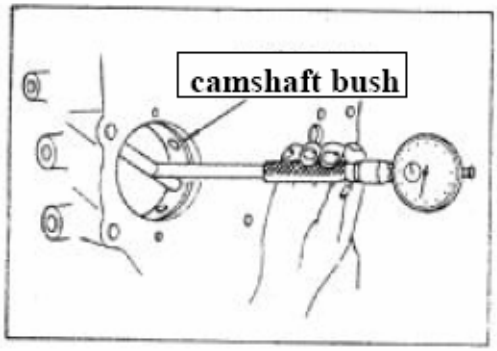

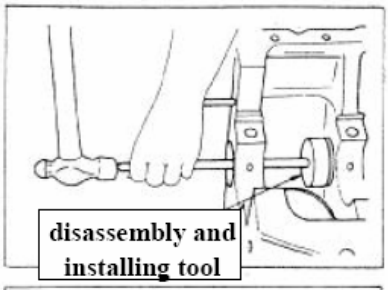

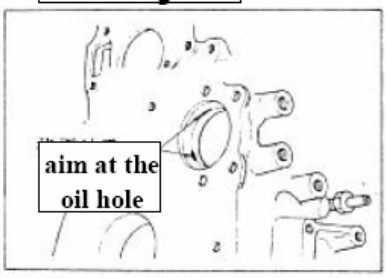

6) Clearance between camshaft and bush

Standard	Limit
0.02-0.109	0.15

Note: When camshaft journal is close to the limit value, we must adjust bush hole dimension to ensure the fit clearance don’t exceed limit value, or we must replace camshaft ahead of time.

7) To replace camshaft bush

To replace camshaft bush with special blanking tool and hammer.

When installing bush, we must make oil hole on the bush aim at oil hole on cylinder-block, among them, the front bush has two oil holes, and the other bush has only one hole.

Note: After semi-finished goods bush was press in, need to manufacture again, in the same time we should ensure the center to center between the hole and idler hole:

136.943 ± 0.02

PDF 文件使用 "pdfFactory Pro" 试用版本创建 www.fineprint.cn

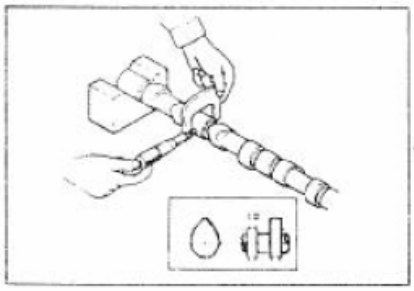

8) Cam height

Type and drawing No.		Standard	Limit
CYQD32 CYQD32EGR 13001 54T03	Inlet	41.5668 ±0.02	41
	Exhaust	41.9 ±0.02	41.3
CYQD32T CYQD32Ti 13001 0W800	Inlet	41.9 ±0.02	41.3
	Exhaust	41.9 ±0.02	41.3

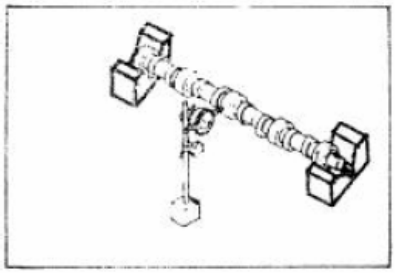

9) Radial beat of camshaft journal

Standard	Limit
0.02	0.5

11. Idler and idler shaft

1) Idler shaft outside diameter

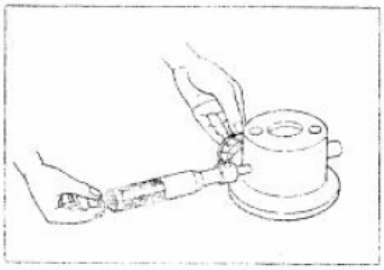

Standard	Limit
Φ41.959-Φ41.975	Φ41.85

12. Final manufacture cylinder hole according to the following dimension producing group.

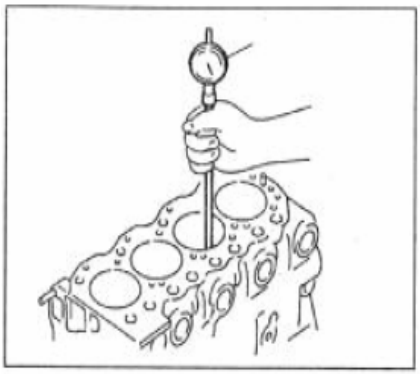

1	Φ99.200-Φ99.210
2	>Φ99.210-Φ99.220
3	>Φ99.220-Φ99.230

Cylinder hole wear limit value: 0.20

X-Y standard value: ≤ 0.020

A-B standard value: ≤0.020

PDF 文件使用 "pdfFactory Pro" 试用版本创建 www.fineprint.cn

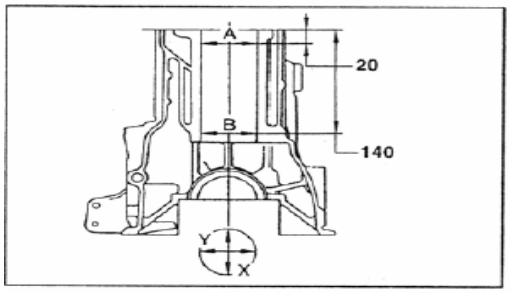

The choice of pistons which were assembled by group.

Cylinder hole group	Piston group		
	1	2	3
1	Ok		
2		Ok	
3			Ok

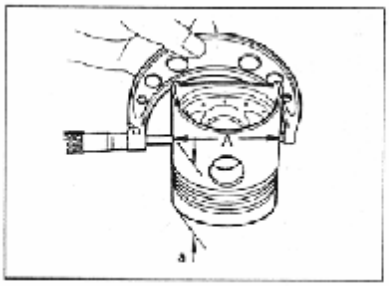

13. Piston, piston pin and piston ring

1) Piston diameter
Measure position

Diesel engine stroke S	The distance from measure point to the top a
102	54.8

Diameter dimension group

Parts No.	Group No.	Nominal diameter A
12011 1W405	1	Φ99.130-Φ99.140
12011 2S605		
12011 1W415	2	>Φ99.140-Φ99.150
12011 2S615		
12011 1W465	3	>Φ99.150-Φ99.160
12011 2S665		

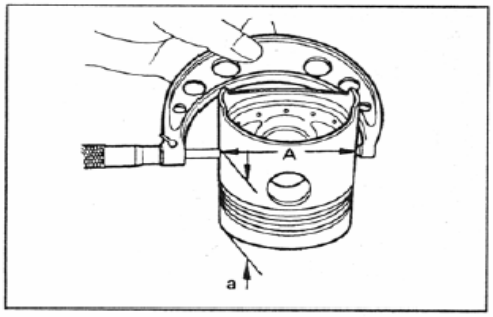

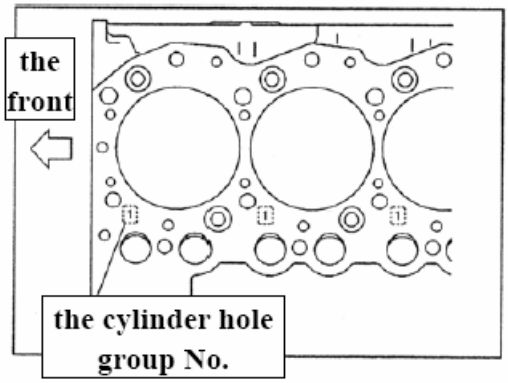

2) Clearance between piston and cylinder

Type and drawing No.	Standard
CYQD32 CYQD32 EGR	0.05-0.07
CYQD32T CYQD32 Ti	0.06-0.08

PDF 文件使用 "pdfFactory Pro" 试用版本创建 www.fineprint.cn

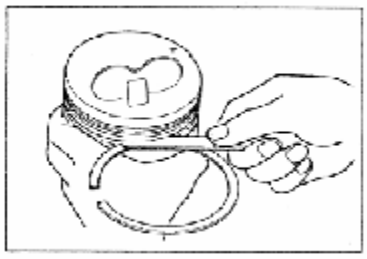

3) Clearance between piston ring and ring groove

	Standard	Limit
The first ring	0.06-0.10	0.2
The second ring	0.04-0.08	0.15
Oil ring	0.02-0.06	0.15

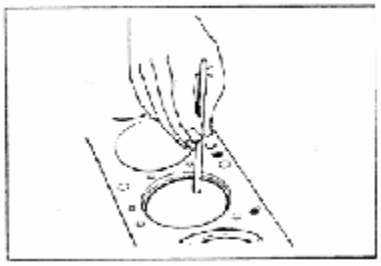

4) Clearance of the piston ring opening

	Standard	Limit
The first ring	0.25-0.45	1.25

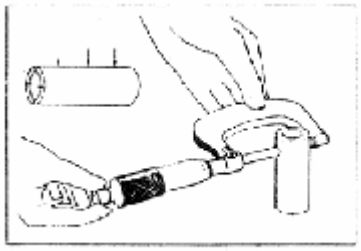

5) Clearance between piston pin and pin hole

$\phi\ 33_{-0.07}^{0}$

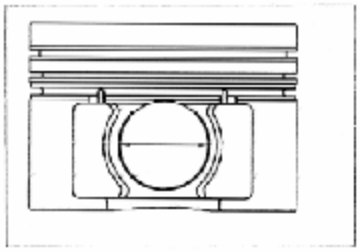

Piston hole inner diameter
$\Phi 33\ 005_{-0.003}^{+0.005}$

Clearance after assembled by group

Standard	Limit
-0.003~0.012	0.10

PDF 文件使用 "pdfFactory Pro" 试用版本创建 www.fineprint.cn

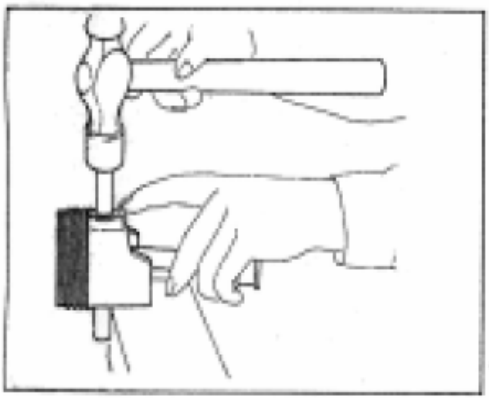

6) To assemble piston pin

When assembling piston pin, heating piston to 60-70 ° C, and painted oil to piston pin and connecting-rod small end bush hole, and ensure piston swing smoothly.

14) Con-rod, bearing shell and bushing

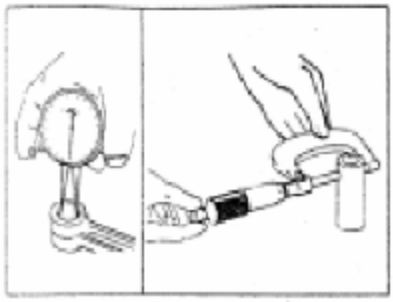

1) Clearance between piston pin and small end hole of con-rod

Standard	limit
0.025-0.045	0.15

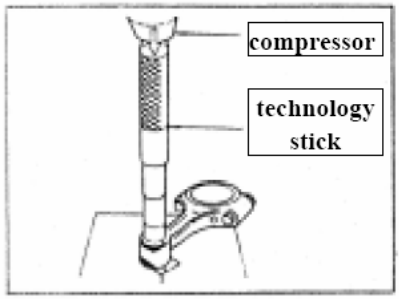

2) Change about small end bushing of con-rod

Extrude bushing of small end by technology bar and compressor, press-in by technology bar and compressor or hammer, pay attention to the justification of oil hole.

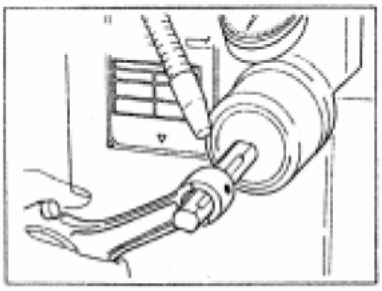

3) Machine of small end bushing hole

After bushing was installed, ream hole by reamer, the center distance is 157±0.025

Standard hole diameter	33.025-33.038

PDF 文件使用 "pdfFactory Pro" 试用版本创建 www.fineprint.cn

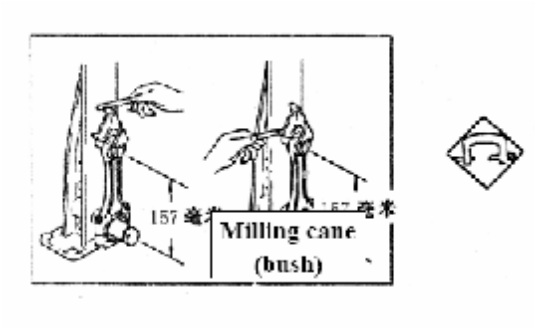

To produce bush according to connecting-rod small end wedge plane, then remove burr.

4)Degree of parallelization about the small and big end hole of con-rod

Limit	100:0.075

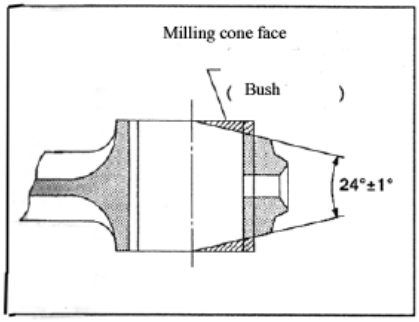

5) Free tension of connecting—rod shell

If the shell is with sufficient free tension, when installing it, the finger should be with certain strength.

If it loosed after installed, we must replace shell.

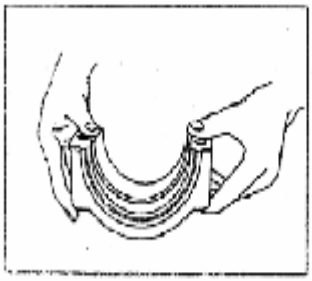

15.Clearance between connecting-rod shell and crankshaft connecting-rod journal

1) To make connecting-rod shell enclose connecting-rod big end hole, and tighten stipulated torque according to the requirement.

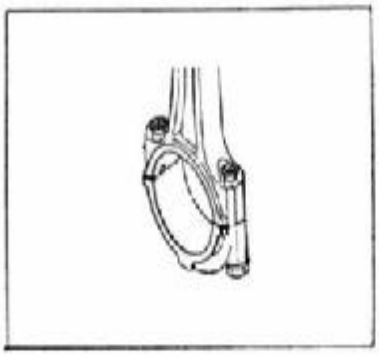

2) The big hole inner diameter after installed shell

Nominal inner diameter	Φ157

PDF 文件使用 "pdfFactory Pro" 试用版本创建 www.fineprint.cn

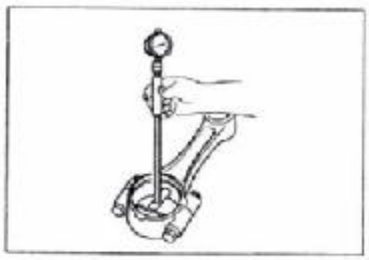

3) The diameter of crankshaft connecting-rod journal

Standard	**Φ56.913-Φ56.926**

4) Clearance
Standard Limit

Standard	Limit
0.035-0.087	0.20

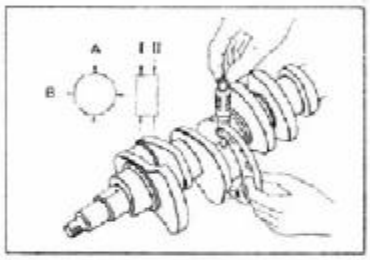

16 、Clearance between the main bearing bush and crankshaft main journal

1) Free tension of the main bearing bush

If the shell is with sufficient free tension, when installing it, the finger should be with certain strength.

If it loosed after installed, we must replace shell.

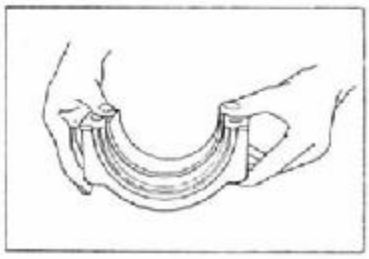

2) To make the main bearing bush enclose the main bearing hole of cylinder-block, and tighten stipulated torque according to the requirement.

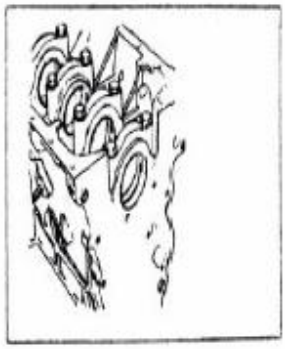

3) The main bearing hole inner diameter after installed the main bearing shell

Nominal inner diameter	**Φ 71**

PDF 文件使用 "pdfFactory Pro" 试用版本创建 www.fineprint.cn

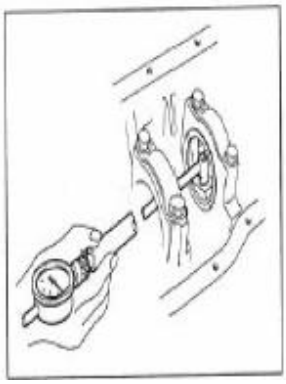

4) The diameter of crankshaft main journal

Standard	**Φ 70.907-Φ 70.920**

5) Clearance

Standard		**Limit**
First	**0.024-0.044**	**0.10**
2nd- 5th	**0.024-0.056**	**0.10**

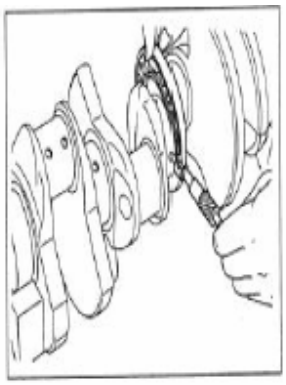

6) Axial clearance of crankshaft

Standard	**Limit**
0.06~0.25	**0.40**

PDF 文件使用 "pdfFactory Pro" 试用版本创建 www.fineprint.cn

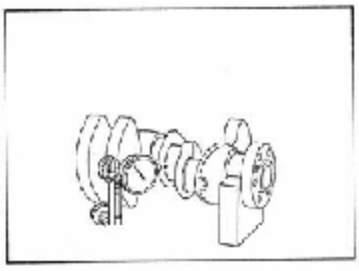

17. Radial beat of the crankshaft main journal

To measure radial beat of the other every journal with V iron supporting 2, 4 main journal.

Standard	Limit
0.03	0.4

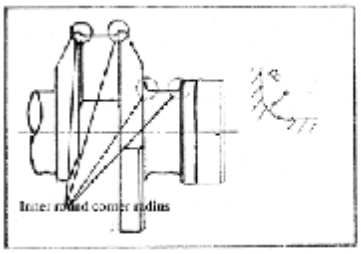

18. The crankshaft regrinding and shell thickening

1) Because dimension, shape and position deviation are extra, crankshaft may be grinded, grinding decreasing dimension allowing 0.5 and 1.0 two shift Round corner radius for the main journal and connecting-rod journal separating: R3± 0.2 and R3.5

± 0.2.

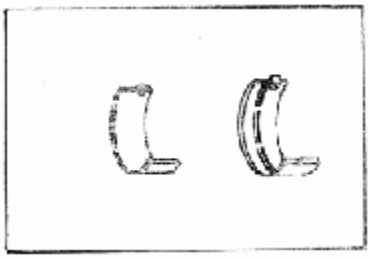

2) Dimension of thickened shell Dimension of thicken shell allowing two shift

Dimension of thickened shell	0.25 and 0.5

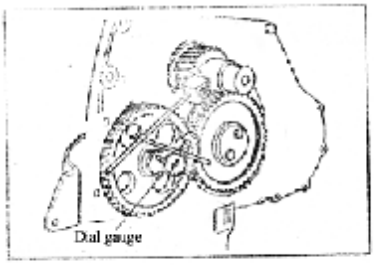

19. Crankshaft gear

1) Clearance of crankshaft gear

Standard	Limit
0.05~0.20	0.35

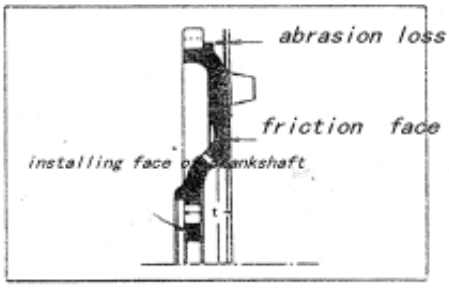

If we found the crankshaft gear exist wear, abnormal phenomenon or side clearance exceed limit, we must replace it.

PDF 文件使用 "pdfFactory Pro" 试用版本创建 www.fineprint.cn

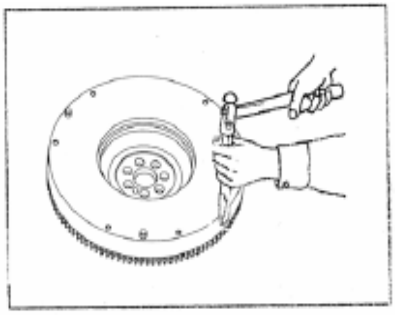

20、Flywheel conjunction

1) Flywheel friction surface wear

Allowance wear limit value is 1.5.

2) To replace gear ring

To disassemble with brass bar and hammer.

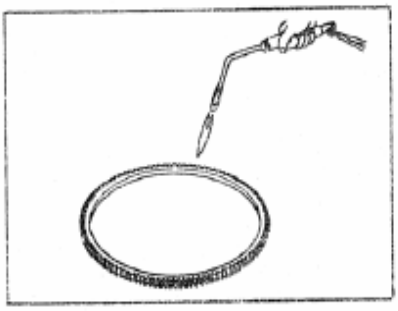

Making gear ring heat by gas spray flame or boil heat oil in order to make it swelling, then install it with hammer.

When assembling, pay attention to chamfer side in inner ring installing plane faced to flywheel.

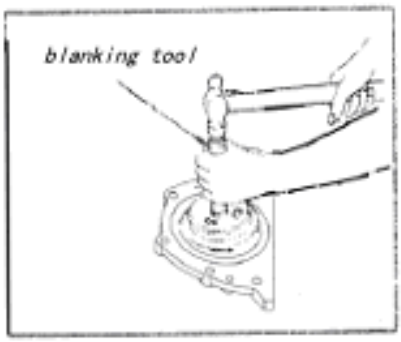

21、 To replace the front and the rear oil seal of the crankshaft

1) The rear oil seal is installed rear oil seal seat, and pried with screw driver, pay attention not to damage installing hole of the rear oil seal.

To install it with blanking tool and hammer.

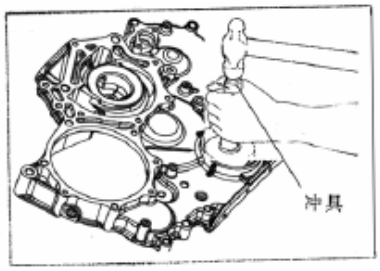

2) The front oil seal is installed gear chamber cover, and pried with screw driver,

pay attention not to damage installing hole of gear chamber cover.

To install it with blanking tool and hammer.

PDF 文件使用 "pdfFactory Pro" 试用版本创建 www.fineprint.cn

VII. Accessory parts disassembly and checking, repairing and adjusting

1. Lubrication system

Lubrication system abridged drawing as follows:

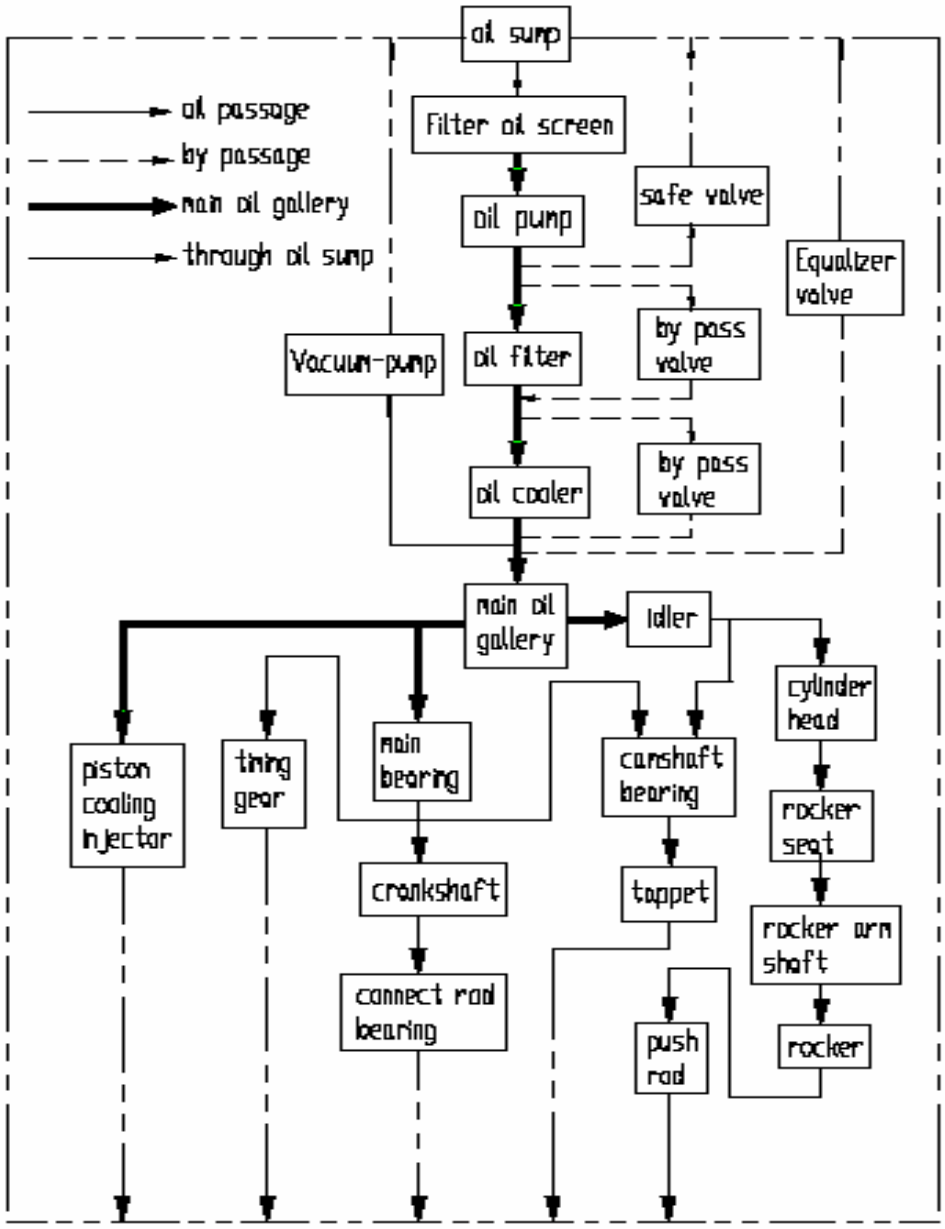

PDF 文件使用 "pdfFactory Pro" 试用版本创建 www.fineprint.cn

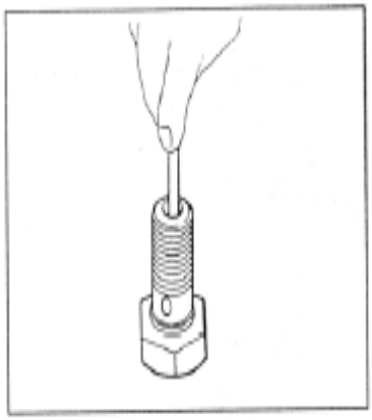

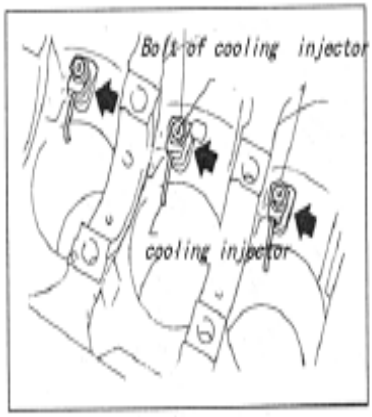

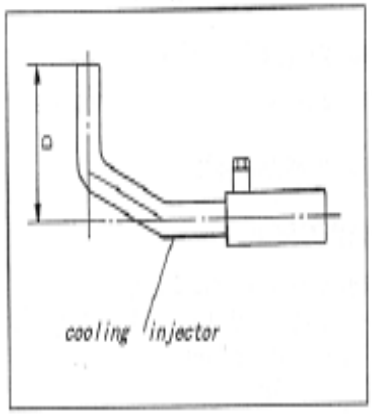

2) Piston cooling injection nozzle

1. To push pressure limiting value with plastic pole or copper pole, and ensure moving smoothly.

2. To ensure nozzle unobstructed, if necessary we may clean it with metal wire.

When installing nozzle, ensure nozzle justification with the main oil gallery of cylinder-block.

Nozzle bolt tightening torque: 29-39 N.m.

	CYQD32series diesel engine
Dimension “D” mm	17

PDF 文件使用 "pdfFactory Pro" 试用版本创建 www.fineprint.cn

3) Oil filter

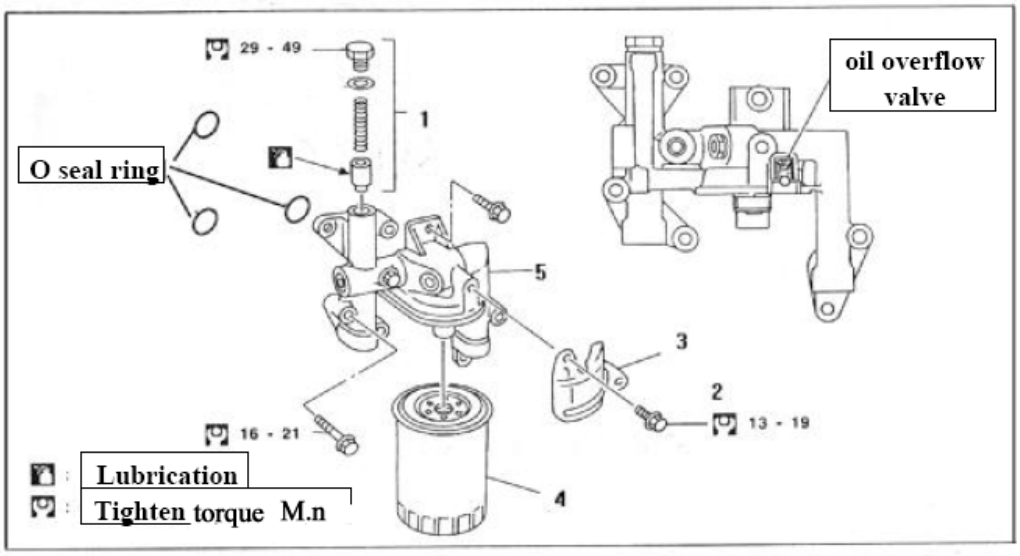

1、 Oil pump overflow valve conjunction
2、 Bolt
3、 Heat-insulating cover
4、 Oil filter
5、 Oil filter seat

Checking and maintenance

1. Oil overflow valve

To check overflow valve motion by pushing overflow valve steel ball, to see if it is flexible and if it is fracture. If it damaged, we must replace a new overflow valve.

2. Oil pump by-pass

(1) To check equalizer- valve unit if it is wear or damaged. If it is damaged,
we should replace new equalizer- valve.

PDF 文件使用 "pdfFactory Pro" 试用版本创建 www.fineprint.cn

(2) When slide valve is smeared by oil, checking if slide valve can move freely in the valve hole. If it can't move, we must repair and replace it.

4) Oil cooler

PDF 文件使用 "pdfFactory Pro" 试用版本创建 www.fineprint.cn

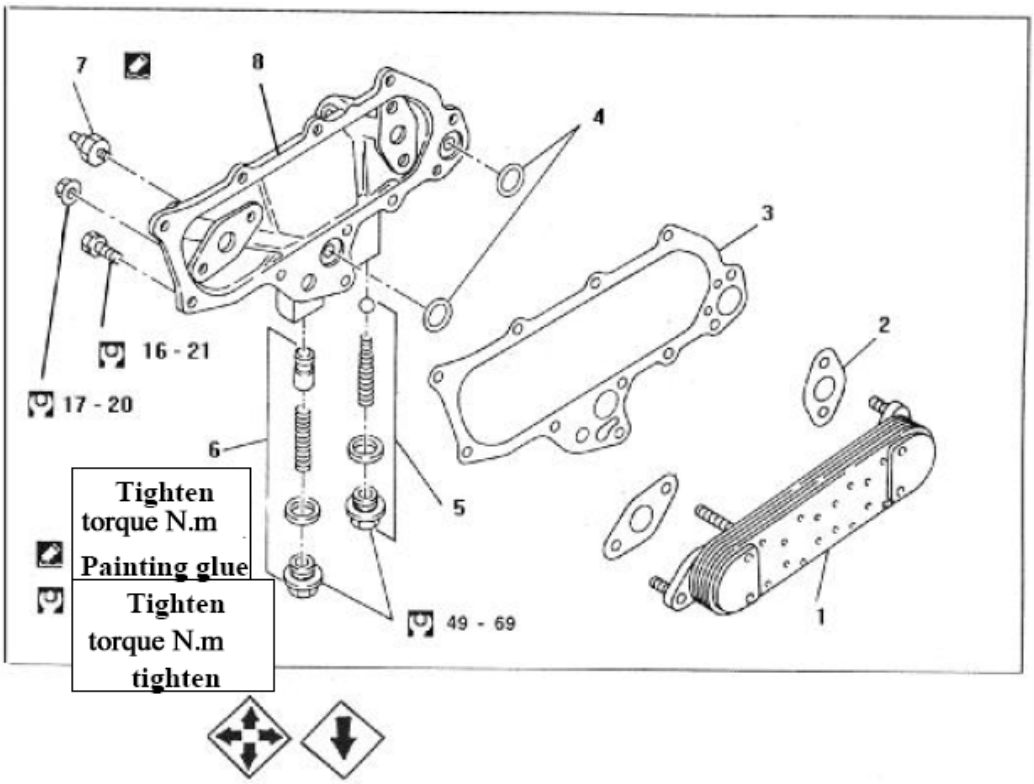

1、Cooler core conjunction　　2、Gasket
3、Seal gasket　　4、Seal ring
5、Overflow valve　　6、Equalizer-valve
7、Oil pressure alarm switch　　8、Oil cooler cover

In principle, assembly order countered with disassembly order.

Checking and repairing

1. Overflow valve

To check overflow valve motion by pushing overflow valve steel ball if it is flexible and if it is fracture. If it is damaged, we must replace new overflow valve.

PDF 文件使用 "pdfFactory Pro" 试用版本创建 www.fineprint.cn

2. Equalizer-valve

(1) To check equalizer- valve unit if it is wear or damaged. If it is damaged, we should replace new equalizer- valve.

(2) When slide valve is smeared by oil, checking if slide valve can move freely in the valve hole. If it can’t move, we must repair and replace it.

To check all disassembly parts, to see if it is wear, damaged or other abnormal phenomenon, especially whether cooler core is block or not. If necessary, we must repair or replace it.

By-pass opening pressure: 300kPa

PDF 文件使用 "pdfFactory Pro" 试用版本创建 www.fineprint.cn

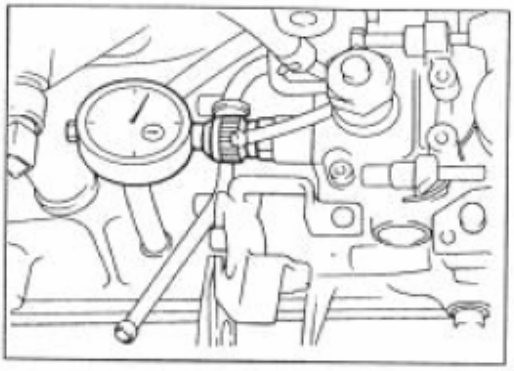

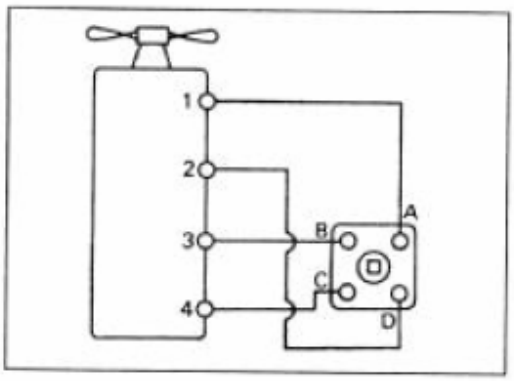

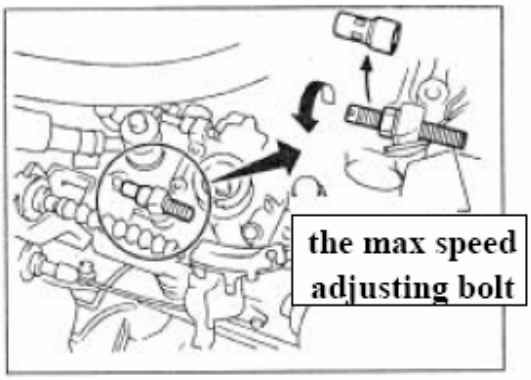

To checking and adjusting injection pump

To check plunger lift:

1. To disassembly high pressure oil pipe and hollow bolt adopter, and install dial gauge.

2. To measure plunger lift:

(1) To make crankshaft from the first cylinder piston T. D.C rotate anticlockwise 20°-25°.

(2) On the above position, dial gauge reading should be adjusted zero.

(3) To rotate crankshaft clockwise until the first cylinder piston reached T.D.C.

(4) Dial gauge reading:

CYQD32: 0.416± 0.020

CYQD32GR: 0.468± 0.020

CYQD32T: 0.527± 0.020

CYQD32Ti: 0.736± 0.020

(5) If reading is not in above scope, we must adjust it as follows:

A: if reading is smaller than requirement, we should rotate pump anticlockwise.

B: if reading is bigger than requirement, we should rotate pump clockwise until it meets the requirement.

3. Hollow bolt adopter torque 14-20 N.m

4. High pressure fuel pipe connecting nut torque 20-25 N.m

2. Injection pump

PDF 文件使用 "pdfFactory Pro" 试用版本创建 www.fineprint.cn

5. Exhaust

The highest idling adjusting:

Before injection pumps leave being out of the factory, the max speed adjusting bolt is locked by the special tool., usually, don't need to adjust. If we must adjust, we may reference following requirements:

1. Starting engine to heat engine until water temperature reached the middle value of thermometer.

2. To make rotation speed meter connecting sensor connect the first cylinder injection oil pipe.

3. To accelerate idling, and read rotation speed meter reading.

Max idling: 4700 ± 100rpm.

4. If reading is smaller than standard value, we should adjust bolt to rotate anticlockwise 1-2 circles, then idling, making the throttle reach the max, and watching the reading.

5. After adjusting, if it is still low, we will continue adjust according to above requirements until it met the requirements.

6. After adjusting, tightening lock nut.

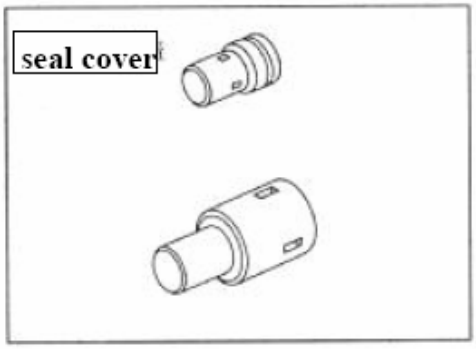

7. To seal well adjusting bolt with seal cover.

Throttle bracket supply angle Position.

Angle Scope:

CYQD32、CYQD32EGR:

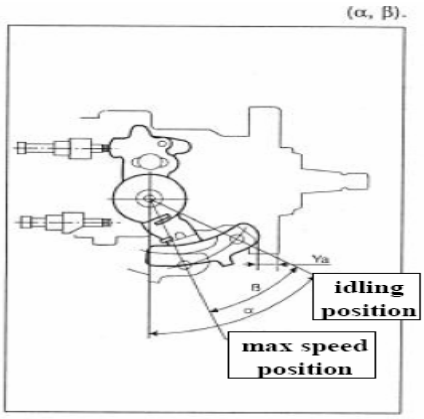

α : 51.5-59.5°

β : 31° - 41°

CYQD32T, CYQD32Ti

α : 55.5± 5°

β : 36± 5°

PDF 文件使用 "pdfFactory Pro" 试用版本创建 www.fineprint.cn

Injection oil amount adjusting data form

Model	Adjusting point	Pump speed R/min	Average supply oil amount ml/st	Uneven amount ml/st	Oil temperature ℃
CYQD32	Index point	1800	54.3 ±3.5		
	Max torque point	1000	54.3 ±0.5	4.5	
	Idling point	350	10.9 ±2.0	2.0	
	Max. idling point	2350	19.2±2.0		
CYQD32EGR	Index point	1800	54.3±3.5		
	Max torque point	1000	54.3 ±0.5	4.5	
	Idling point	350	10.9 ±2.0	2.0	
	Max. idling point	2350	10.9 ±2.0		
CYQD32T	Index point	1800	64.7±4.0		48~52
	Max torque point	1000	56.8±1.0	6.0	48~52
	Idling point	350	10.3±2.5	2.5	46~50
	Max. idling point	2350	24.6±2.5		50~54
CYQD32Ti	Index point	1800	75.3±4.0		48~52
	Max torque point	1000	70.9 ±1.0	6.0	48~52
	Idling point	350	10.3±2.5	2.5	46~50
	Max. idling point	2350	30.1±2.5		50~54

PDF 文件使用 "pdfFactory Pro" 试用版本创建 www.fineprint.cn

3. Preheating controlling system

Preheating controlling box connection elementary diagram

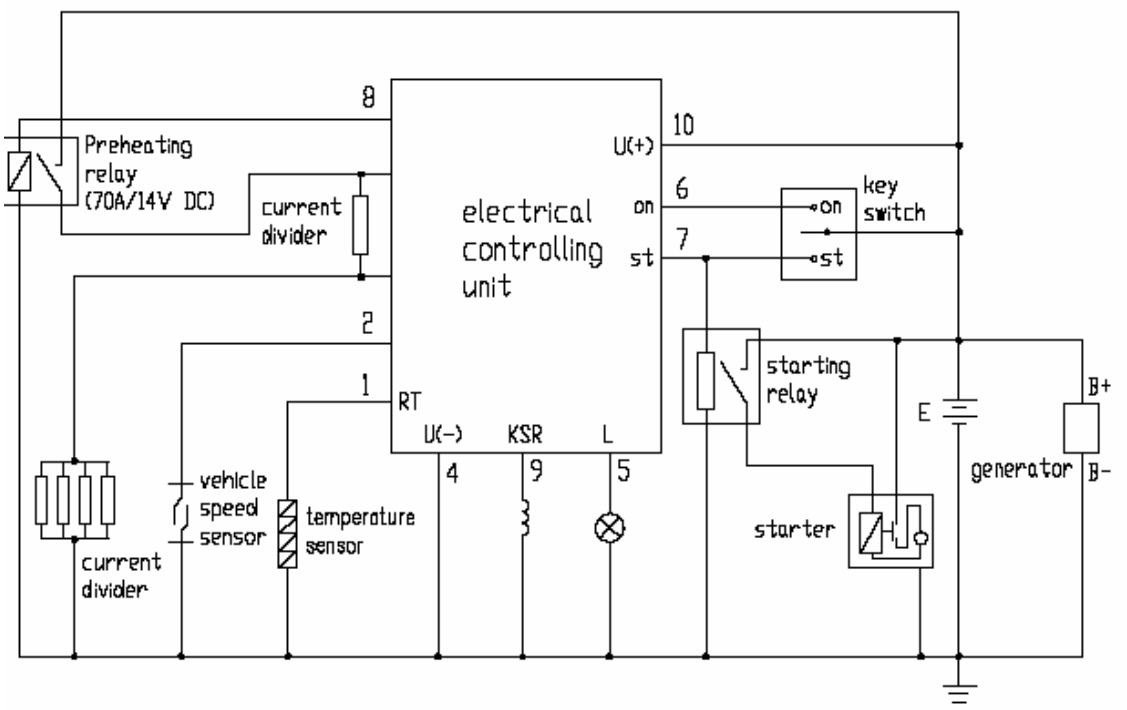

Operation instructions and notes:

1). Please strictly according to the right connecting of the drawing, specially pay attention to right connection of power source positive pole and negative pole, or electric device will not normal working and maybe damage due to it.

2). When we start engine, making key switch rotate working shift (ON), please suspend 2-3 seconds, if preheating indicating light is bright (showed that cooling temperature now is lower than the device setting value 5± 1℃ , system will preheat automatic). After prophase preheating finished (prophase preheating time is 20 seconds), when preheating indicating light blink (1.2Hz tact), then may start engine, if preheating indicating light blinked in beginning 10 ± 2 seconds, can't still start engine, electric device will automatically cut off circuit, and preheating indicating light stops blinking. If you want to preheat and start again, so must close electric door key 3 seconds, and repeat above steps again.

3). If engine is started, preheating indicating light continue to blink, it

PDF 文件使用 "pdfFactory Pro" 试用版本创建 www.fineprint.cn

showed electric plug is heated after carrying out, and it will close automatically about after 40 seconds.

4). During engine begin to run, if there is more than one electric plug, overflow valve(KSB valve), preheating relay or circuit happened failure, the preheating plug indicating light will blink quickly(it hinted customers should check circuit or change electric plug and overflow valve ect, by it, but electric controlling device still continue to work.) Quickly blinking is 2.5Hz tact.

5). We strong suggested during colder weather, in order to protect your engine and your benefit, you may not start engine until you must wait for prophase preheating finished (after preheating indicating light blink).

6). Please pay attention to use after-heating electric plug matching with the device.

4. EGR controlling system (CYQD32EGR engine)

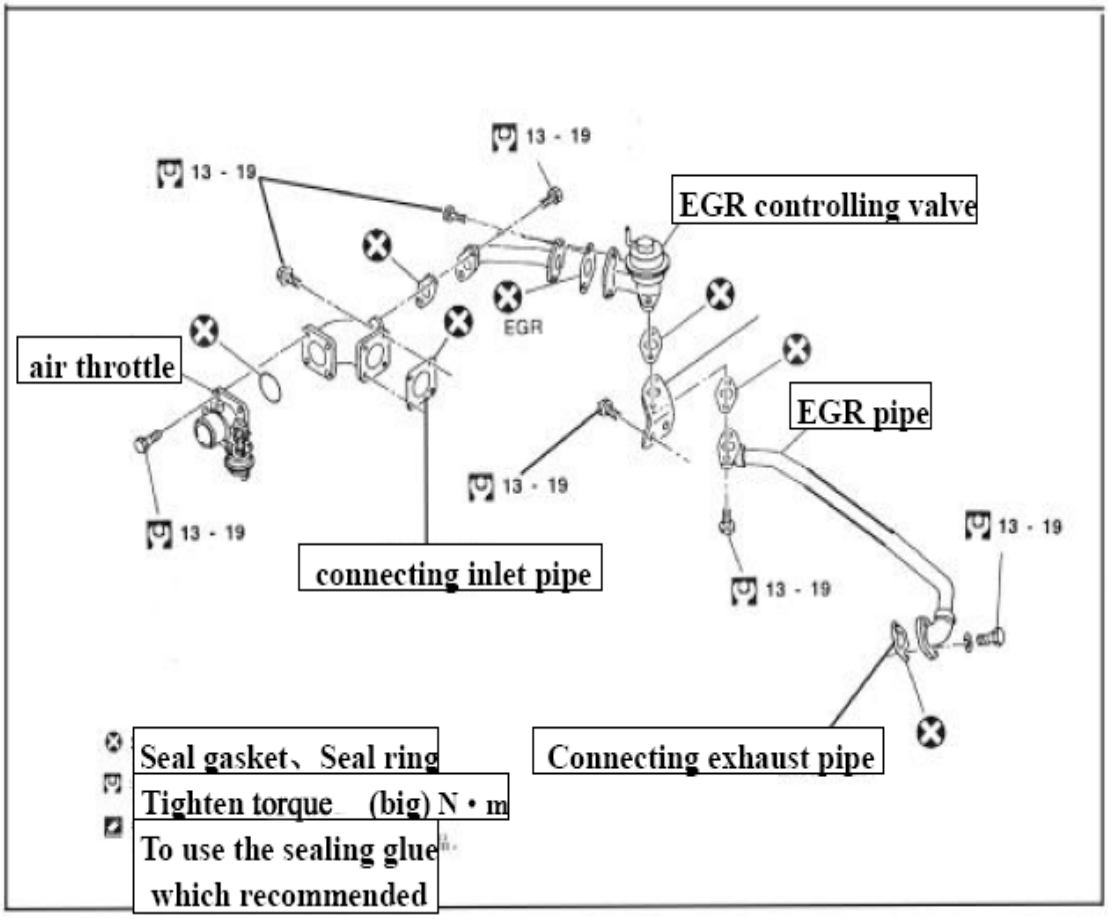

PDF 文件使用 "pdfFactory Pro" 试用版本创建 www.fineprint.cn

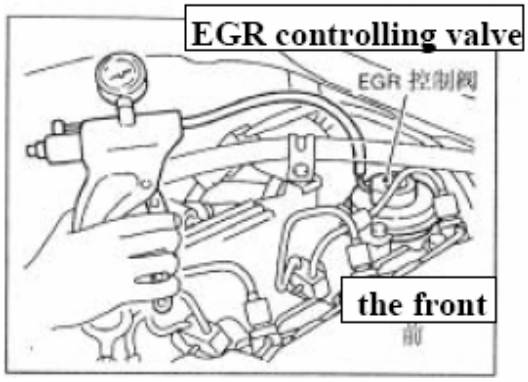

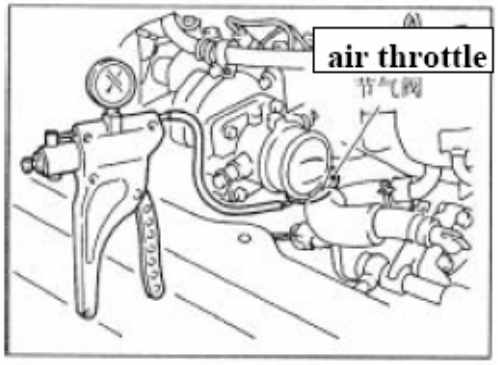

Checking and maintenance EGR controlling unit.

EGR controlling valve

To give EGR vacuum pipe supply vacuum with manual vacuum pump, EGR valve membrane should be raised, or we must replace EGR controlling valve.

Air throttle

To give air throttle supply vacuum with manual vacuum pump, throttle should be closed, or we must replace EGR controlling valve.

PDF 文件使用 "pdfFactory Pro" 试用版本创建 www.fineprint.cn

5. Turbocharger (CYQD32T、CYQD32Ti)

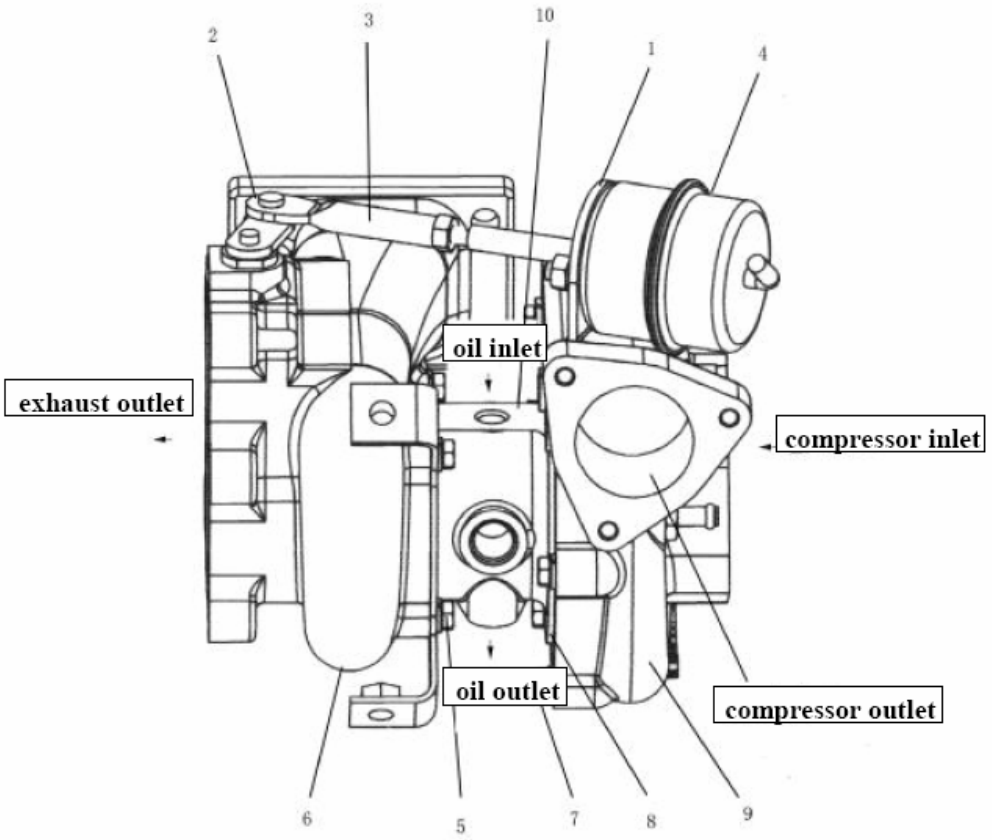

1. Bracket 2. Check ring 3. Interlocking bar 4. Execution unit
5. bolt 6. bolt 7. Turbine case 8. Clip
9. Compressor case 10. The middle body assembly

To check and measure outside of the turbine-super-charger
To check and measure the turbine-super-charger, if found abnormal, then disassembly.
Note: Adhering oil in compressor pipeline is normal. It is oil which lubricated rotator, if exhaust air without abnormal white smoking, it belongs to the normal every parts outside checking.
1) With visual checking if it existed chappy, interference, damage, deformation and if it existed leakage air and leakage oil.
2) To rotate rotator with hand, to check if it rotates flexibly and check rotator clearance between axial and rotating direction.

PDF 文件使用 "pdfFactory Pro" 试用版本创建 www.fineprint.cn

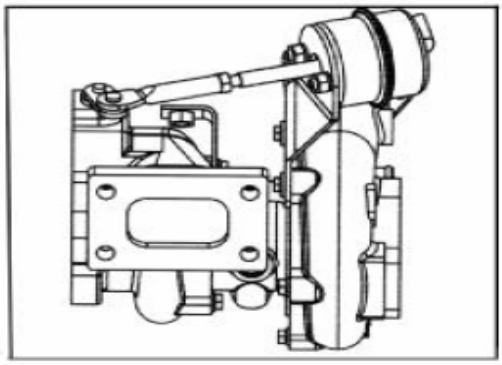

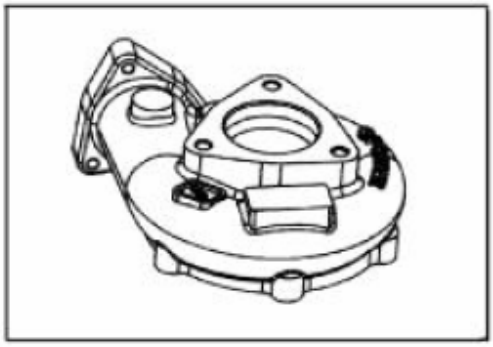

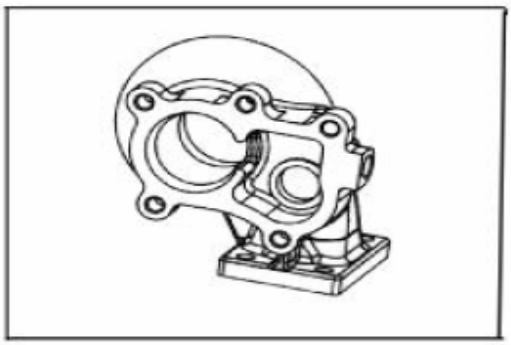

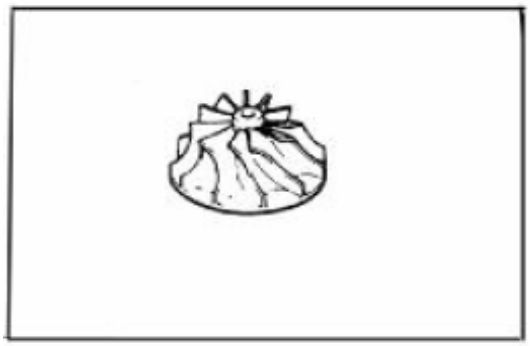

Disassembly

1. Execution unit

- **To disassembly the rear of execution unit pole from venting valve crank lever.**
- **To disassembly rubber pipe**
- **To disassembly execution unit bracket.**

2. Compressor case

- **To make mark between central body and compressor case.**
- **To loose bolt, and disassembly compressor case.**

3. Turbine case

- **To make bolt, and disassembly turbine case.**

Note: When disassembly, pay attention to vane have no interference.

Checking after disassembly

- **The vane has not bending, chappy and damage.**
- **Vane and case have not interference.**
- **No carbon and oil abnormal adhereing.**

Note: If we found quality of middle body is not good, we must replace it.

Cleaning after disassembly

To clean carbon and contamination in all kinds of spare parts conjunction, oil passage, flange surface, inlet and outlet passage.

- **To blow dry after cleaning.**

PDF 文件使用 "pdfFactory Pro" 试用版本创建 www.fineprint.cn

PDF 文件使用 "pdfFactory Pro" 试用版本创建 www.fineprint.cn