Repair Manual

Golf 2015 ➤
Golf Variant 2015 ➤

Engine Mechanical, Fuel Injection and Ignition									
Engine ID	CNT A	CXB A	CNS A	CXB B	CNS B	CXC A	CXC B		

Edition 04.2015

Protected by copyright. Copying for private or commercial purposes, in part or in whole, is not permitted unless authorised by Volkswagen AG. Volkswagen AG does not guarantee or accept any liability with respect to the correctness of information in this document. Copyright by Volkswagen AG.

List of Workshop Manual Repair Groups

Protected by copyright. Copying for private or commercial purposes, in part or in whole, is not permitted unless authorised by Volkswagen AG. Volkswagen AG does not guarantee or accept any liability with respect to the correctness of information in this document. Copyright by Volkswagen AG.

Repair Group

00 - General, Technical Data
10 - Engine Assembly
13 - Crankshaft, Cylinder Block
15 - Cylinder Head, Valvetrain
17 - Lubrication
19 - Cooling System
21 - Turbocharger, Supercharger
24 - Multiport Fuel Injection
26 - Exhaust System, Emission Controls
28 - Ignition/Glow Plug System

Technical information should always be available to the foremen and mechanics, because their careful and constant adherence to the instructions is essential to ensure vehicle road-worthiness and safety. In addition, the normal basic safety precautions for working on motor vehicles must, as a matter of course, be observed.

All rights reserved.
No reproduction without prior agreement from publisher.

Copyright © 2016 Volkswagen AG, Wolfsburg

D4B80416622

Contents

00 - General, Technical Data . . . 1

1 **Safety Precautions** . . . 1
1.1 Safety Precautions, Working on Fuel Supply System . . . 1
1.2 Start/Stop System Safety Precautions . . . 1
1.3 Safety Precautions, Road Test with Testing Equipment . . . 1
1.4 Ignition System Safety Precautions . . . 2
1.5 Cooling System Safety Precautions . . . 2
2 **Identification** . . . 3
2.1 Engine Number/Engine Characteristics . . . 3
3 **Repair Information** . . . 5
3.1 Clean Working Conditions . . . 5
3.2 Engine Contaminants . . . 5
3.3 Contact Corrosion . . . 5
3.4 Wire Routing and Securing . . . 5
3.5 Cooler and Condenser Assembly . . . 6
3.6 Vacuum System, Checking . . . 6
4 **Special Tools** . . . 7

10 - Engine Assembly . . . 8

1 **Engine, Removing and Installing** . . . 8
1.1 Engine, Removing . . . 8
1.2 Engine and Transmission, Separating . . . 19
1.3 Engine, Securing on Engine and Transmission Holder . . . 23
1.4 Engine, Installing . . . 24
2 **Subframe Mount** . . . 29
2.1 Overview - Subframe Mount . . . 29
2.2 Engine Mount, Removing and Installing . . . 30
2.3 Transmission Mount, Removing and Installing . . . 31
2.4 Pendulum Support, Removing and Installing . . . 33
2.5 Engine, Supporting in Installed Position . . . 33
2.6 Subframe Mount, Adjusting . . . 36
2.7 Subframe Mount, Checking Adjustment . . . 37
3 **Engine Cover** . . . 38
3.1 Engine Cover, Removing and Installing . . . 38
4 **Special Tools** . . . 39

13 - Crankshaft, Cylinder Block . . . 44

1 **Cylinder Block, Belt Pulley Side** . . . 44
1.1 Overview - Cylinder Block, Belt Pulley Side . . . 44
1.2 Ribbed Belt, Removing and Installing . . . 46
1.3 Ribbed Belt Tensioner, Removing and Installing . . . 47
1.4 Vibration Damper, Removing and Installing . . . 47
1.5 Auxiliary Components Bracket, Removing and Installing . . . 53
1.6 Engine Support, Removing and Installing . . . 55
2 **Cylinder Block, Transmission Side** . . . 57
2.1 Overview - Cylinder Block, Transmission Side . . . 57
2.2 Flywheel, Removing and Installing . . . 58
2.3 Sealing Flange, Removing and Installing, Transmission Side . . . 59
3 **Crankshaft** . . . 62
3.1 Overview - Crankshaft . . . 62
3.2 Crankshaft Dimensions . . . 64
3.3 Main Bearing Shells Allocation . . . 64

Protected by copyright. Copying for private or commercial purposes, in part or in whole, is not permitted unless authorised by Volkswagen AG. Volkswagen AG does not guarantee or accept any liability with respect to the correctness of information in this document. Copyright by Volkswagen AG.

3.4 Crankshaft Needle Bearing, Replacing . . . 65
3.5 Crankshaft, Measuring Axial Clearance . . . 67
3.6 Crankshaft, Measuring Radial Clearance . . . 67
3.7 Sensor Wheel, Removing and Installing . . . 68

4 Balance Shaft . . . 69
4.1 Overview - Balance Shaft . . . 69
4.2 Balance Shaft, Removing and Installing . . . 70
4.3 Balance Shaft Sealing Ring, Replacing, Intake Side . . . 75

5 Piston and Connecting Rod . . . 77
5.1 Overview - Piston and Connecting Rod . . . 77
5.2 Pistons, Removing and Installing . . . 78
5.3 Pistons and Cylinder Bore, Checking . . . 80
5.4 New Connecting Rod, Separating . . . 84
5.5 Connecting Rods, Checking Radial Clearance . . . 84

6 Special Tools . . . 86

15 - Cylinder Head, Valvetrain . . . 90

1 Cylinder Head . . . 90
1.1 Overview - Cylinder Head . . . 90
1.2 Overview - Camshaft Housing . . . 93
1.3 Cylinder Head, Removing and Installing . . . 94
1.4 Vacuum Pump, Removing and Installing . . . 100
1.5 Compression Pressure, Checking . . . 101

2 Timing Chain Cover . . . 104
2.1 Overview - Timing Chain Cover . . . 104
2.2 Timing Chain Cover, Removing and Installing . . . 106
2.3 Vibration Damper Sealing Ring, Replacing . . . 112

3 Chain Drive . . . 114
3.1 Overview - Camshaft Timing Chain . . . 114
3.2 Overview - Balance Shaft Drive Chain . . . 116
3.3 Camshaft Timing Chain, Removing and Installing . . . 118
3.4 Balance Shaft Drive Chain, Removing and Installing . . . 130
3.5 Chain Length, Checking . . . 130
3.6 Valve Timing, Checking . . . 131

4 Valvetrain . . . 133
4.1 Overview - Valvetrain . . . 133
4.2 Camshaft, Removing and Installing . . . 136
4.3 Camshaft Adjustment Valve 1 N205 , Removing and Installing . . . 160
4.4 Camshaft Adjustment Valve 1 N205 and Exhaust Camshaft Adjustment Valve 1 N318 , Removing and Installing . . . 161
4.5 Sliding Bar Ball, Installing . . . 162
4.6 Valve Stem Seals, Removing and Installing . . . 163

5 Intake and Exhaust Valves . . . 170
5.1 Valve Guides, Checking . . . 170
5.2 Valves, Checking . . . 170
5.3 Valve Dimensions . . . 170

6 Special Tools . . . 171

17 - Lubrication . . . 179

1 Oil Pan/Oil Pump . . . 179
1.1 Overview - Oil Pan/Oil Pump . . . 179
1.2 Engine Oil . . . 182
1.3 Oil Pan Lower Section, Removing and Installing . . . 182
1.4 Oil Pan Upper Section, Removing and Installing . . . 185
1.5 Oil Pump, Removing and Installing . . . 188

Protected by copyright. Copying for private or commercial purposes, in part or in whole, is not permitted unless authorised by Volkswagen AG. Volkswagen AG does not guarantee or accept any liability with respect to the correctness of information in this document. Copyright by Volkswagen AG.

1.6 Oil Level Thermal Sensor G266 , Removing and Installing . . . 190
2 Engine Oil Cooler . . . 192
2.1 Overview - Engine Oil Cooler . . . 192
2.2 Engine Oil Cooler, Removing and Installing . . . 192
2.3 Mechanical Switch Valve, Removing and Installing . . . 194
3 Crankcase Housing Ventilation . . . 195
3.1 Overview - Crankcase Ventilation . . . 195
3.2 Oil Separator, Removing and Installing . . . 196
4 Oil Filter/Oil Pressure Switch . . . 197
4.1 Overview - Oil Filter . . . 197
4.2 Overview - Oil Pressure Switch/Oil Pressure Regulator Valve . . . 198
4.3 Oil Pressure Switch F1 , Removing and Installing . . . 199
4.4 Reduced Oil Pressure Switch F378 , Removing and Installing . . . 200
4.5 Oil Pressure Switch, Level 3 F447 , Removing and Installing . . . 201
4.6 Oil Pressure, Checking . . . 202
4.7 Piston Cooling Nozzle Control Valve N522 , Removing and Installing . . . 205
4.8 Oil Pressure Regulation Valve N428 , Removing and Installing . . . 206
5 Special Tools . . . 208

19 - Cooling System . . . 210

1 Cooling System/Coolant . . . 210
1.1 Connection Diagram - Coolant Hoses . . . 210
1.2 Coolant System, Checking for Leaks . . . 216
1.3 Coolant, Draining and Filling . . . 217
2 Coolant Pump/Thermostat . . . 223
2.1 Overview - Coolant Pump/Thermostat . . . 223
2.2 Overview - Electric Coolant Pump . . . 226
2.3 Overview - Engine Coolant Temperature Sensor . . . 228
2.4 After-Run Coolant Pump V51 , Removing and Installing . . . 228
2.5 Coolant Shut-Off Valve N82 , Removing and Installing . . . 230
2.6 Transmission Coolant Valve N488 , Removing and Installing . . . 231
2.7 Coolant Pump, Removing and Installing . . . 232
2.8 Coolant Pump Toothed Belt, Removing and Installing . . . 235
2.9 Engine Temperature Control Actuator N493 , Removing and Installing . . . 237
2.10 Engine Coolant Temperature Sensor G62 , Removing and Installing . . . 238
2.11 Engine Coolant Temperature Sensor on Radiator Outlet G83 , Removing and Installing . . . 239
3 Coolant Pipes . . . 241
3.1 Overview - Coolant Pipes . . . 241
3.2 Front Coolant Pipes, Removing and Installing . . . 241
3.3 Upper Coolant Pipes, Removing and Installing . . . 242
4 Radiator/Coolant Fan . . . 244
4.1 Overview - Radiator/Coolant Fan . . . 244
4.2 Overview - Auxiliary Cooler . . . 245
4.3 Overview - Fan Shroud and Radiator Fan . . . 247
4.4 Radiator, Removing and Installing . . . 247
4.5 Fan Shroud, Removing and Installing . . . 249
4.6 Coolant Fan, Removing and Installing . . . 250
4.7 Auxiliary Cooler, Removing and Installing . . . 251
5 Special Tools . . . 253

21 - Turbocharger, Supercharger . . . 256

1 Turbocharger . . . 256
1.1 Overview - Turbocharger . . . 256
1.2 Turbocharger, Removing and Installing . . . 258

Protected by copyright. Copying for private or commercial purposes, in part or in whole, is not permitted unless authorised by Volkswagen AG. Volkswagen AG does not guarantee or accept any liability with respect to the correctness of information in this document. Copyright by Volkswagen AG.

1.3 Charge Pressure Actuator V465 , Adjusting . . . 263
2 Charge Air System . . . 264
2.1 Overview - Charge Air System . . . 264
2.2 Overview - Charge Air Hose Connections . . . 265
2.3 Charge Air Cooler, Removing and Installing . . . 265
2.4 Charge Air Pressure Sensor G31 , Removing and Installing . . . 269
2.5 Charge Air System, Checking for Leaks . . . 269
3 Special Tools . . . 271

24 - Multiport Fuel Injection . . . 273

1 Fuel Injection System . . . 273
1.1 Overview - Component Location, Fuel Injection System . . . 273
1.2 High Fuel Pressure, Reducing . . . 283
2 Fuel Injectors . . . 285
2.1 Overview - Fuel Injector . . . 285
2.2 Fuel Injectors, Removing and Installing . . . 285
2.3 Intake Manifold-Fuel Injectors, Removing and Installing . . . 287
2.4 Fuel Injector Seals, Replacing . . . 288
2.5 Fuel Injectors, Cleaning . . . 291
3 Air Filter . . . 293
3.1 Overview - Air Filter Housing . . . 293
3.2 Air Filter Housing, Removing and Installing . . . 294
4 Intake Manifold . . . 296
4.1 Overview - Intake Manifold . . . 296
4.2 Overview - Intake Manifold Lower Section with Fuel Rail . . . 300
4.3 Intake Manifold, Removing and Installing . . . 304
4.4 Fuel Rail, Removing and Installing, Direct Fuel Injection . . . 309
4.5 Throttle Valve Control Module GX3 , Removing and Installing . . . 309
4.6 Throttle Valve Control Module, Cleaning . . . 311
5 Sensors . . . 313
5.1 Overview - Structure Borne Sound Actuator and Control Module . . . 313
5.2 Fuel Pressure Sensor G247 , Removing and Installing . . . 314
5.3 Fuel Pressure Sensor G247 , Checking . . . 316
5.4 Low Fuel Pressure Sensor G410 , Removing and Installing . . . 318
6 Engine Control Module . . . 321
6.1 Engine Control Module J623 , Removing and Installing . . . 321
7 High Pressure Pump . . . 325
7.1 Overview - High Pressure Pump . . . 325
7.2 High Pressure Pump, Removing and Installing . . . 328
8 Heated Oxygen Sensor . . . 333
8.1 Overview - Heated Oxygen Sensor . . . 333
8.2 Oxygen Sensor 1 before Catalytic Converter GX10 , Removing and Installing . . . 333
8.3 Oxygen Sensor 1 after Catalytic Converter GX7 , Removing and Installing . . . 334
9 Special Tools . . . 336

26 - Exhaust System, Emission Controls . . . 338

1 Exhaust Pipes/Mufflers . . . 338
1.1 Overview - Muffler . . . 338
1.2 Exhaust Pipes/Mufflers, Separating . . . 342
1.3 Muffler, Removing and Installing . . . 343
1.4 Exhaust System, Installing without Tension . . . 345
1.5 Exhaust System, Checking for Leaks . . . 346
1.6 Clamping Sleeve Installation Position . . . 347
2 Emissions Control . . . 348

Protected by copyright. Copyright by Volkswagen AG. Volkswagen AG does not guarantee or accept any liability with respect to the correctness of information in this document. Copyright by Volkswagen AG. Reproduction, in whole or in part, or any other use for commercial purposes, is prohibited.

2.1 Overview - Emissions Control . . . 348
2.2 Catalytic Converter, Removing and Installing . . . 349
3 Secondary Air Injection System . . . 352
3.1 Overview - Secondary Air Injection System . . . 352
3.2 Secondary Air Injection Pump Motor V101 , Removing and Installing . . . 353
3.3 Secondary Air Injection Solenoid Valve N112 , Removing and Installing . . . 353
4 Special Tools . . . 355

28 - Ignition/Glow Plug System . . . 356
1 Ignition System . . . 356
1.1 Overview - Ignition System . . . 356
1.2 Test Data and Spark Plugs . . . 357
1.3 Ignition Coils with Power Output Stages, Removing and Installing . . . 357
1.4 Knock Sensor 1 G61 , Removing and Installing . . . 359
1.5 Camshaft Position Sensor, Removing and Installing . . . 360
1.6 Engine Speed Sensor G28 , Removing and Installing . . . 361
2 Special Tools . . . 362
3 Revision History . . . 363

Protected by copyright. Copying for private or commercial purposes, in part or in whole, is not permitted unless authorised by Volkswagen AG. Volkswagen AG does not guarantee or accept any liability with respect to the correctness of information in this document. Copyright by Volkswagen AG.

Protected by copyright. Copying for private or commercial purposes, in part or in whole, is not permitted unless authorised by Volkswagen AG. Volkswagen AG does not guarantee or accept any liability with respect to the correctness of information in this document. Copyright by Volkswagen AG.

00 – General, Technical Data

1 Safety Precautions

(Edition 04.2015)

⇒ “1.1 Safety Precautions, Working on Fuel Supply System”, page 1 .

⇒ “1.2 Start/Stop System Safety Precautions”, page 1 .

⇒ “1.3 Safety Precautions, Road Test with Testing Equipment”, page 1 .

⇒ “1.4 Ignition System Safety Precautions”, page 2 .

⇒ “1.5 Cooling System Safety Precautions”, page 2 .

1.1 Safety Precautions, Working on Fuel Supply System

There Is a Risk of Injury Because the Fuel Is under High Pressure.

Fuel system is under high pressure. Injury from fuel squirting out is possible.

– Release the fuel system before opening the fuel system.

Procedure for releasing the fuel high pressure. Refer to ⇒ “1.2 High Fuel Pressure, Reducing”, page 283 .

Burn Risk Due to Escaping Fuel.

With the battery connected, the door contact switch activates the fuel pump when opening the driver door. Escaped fuel can ignite and lead to fire.

– Before opening the fuel system interruption the power supply for the fuel pump.

1.2 Start/Stop System Safety Precautions

There Is a Risk of Injury from the Engine Starting Unexpectedly.

The engine can start unexpectedly for vehicles while the start/stop system is activated. If the Start/Stop System is activated, is recognized by a message in the instrument cluster.

– Deactivate the Start/Stop System: switch off the ignition.

1.3 Safety Precautions, Road Test with Testing Equipment

There Is a Risk of Injury Due to Unsecured Testing Equipment.

If the front passenger airbag activates during an accident unsecured testing equipment becomes a dangerous projectile.

– Secure testing equipment on the rear seat.

or

– Have a second person operate testing equipment on the rear seat.

Protected by copyright. Copyright by Volkswagen AG. Volkswagen AG does not guarantee or accept any liability with respect to the correctness of information in this document. Copyright by Volkswagen AG.

1.4 Ignition System Safety Precautions

There Is a Risk of Injury Due to Electric Shock.

With the engine running the ignition system is under high voltage. Electric shock is possible through contact with the ignition system.

– Never touch or remove ignition wires when engine is running or turning at starting speed.

Danger of Damaging the Components.

An engine wash as well as connecting and disconnecting electrical component wires with the engine running can cause damage.

– Switch off the ignition before connecting and disconnecting wires.

– Switch off the ignition before an engine wash.

1.5 Cooling System Safety Precautions

There Is a Risk of Burns from Hot Coolant.

The coolant system is under pressure when the engine is warm. Risk of scalding due to hot steam and hot coolant.

– Wear safety gloves.

– Wear protective eyewear.

– Reduce the pressure: cover the coolant reservoir cap with a cloth and carefully open.

Protected by copyright. Copying for private or commercial purposes, in part or in whole, is not permitted unless authorised by Volkswagen AG. Volkswagen AG does not guarantee or accept any liability with respect to the correctness of information in this document. Copyright by Volkswagen AG.

2 Identification

⇒ “2.1 Engine Number/Engine Characteristics”, page 3

2.1 Engine Number/Engine Characteristics

Engine Number

The engine number (“engine codes” and “serial number”) are located at the engine/transmission joint.

The engine code is also printed behind the oil filter on the cylinder block.

There is also a label glued to the timing chain cover with the “engine code” and “serial number”.

The first three digits describe the mechanical structure of the engine and are still stamped on the engine. The fourth digit describes the engine output and torque and depends on the engine control module. Four-digit engine codes are found on the type plate and vehicle data label. It can also be read via the Engine Control Module (ECM).

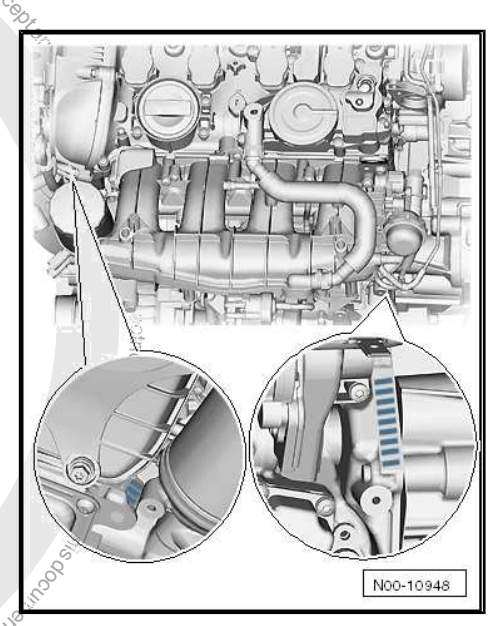

Note

Vehicle data label locations. Refer to ⇒ Maintenance ; Booklet 36.1 ; General Information; Vehicle Data Label

Engine Data

Code Letters		CXBA	CXBB	CNSA	CNSB
Manufactured from		07/2014	07/2014	07/2014	07/2014
Emissions values		SULEV	SULEV	SULEV	SULEV
Displacement	liter	1.8	1.8	1.8	1.8
Output	kW at RPM	125 at 4800 to 6200	125 at 4520 to 6250	125 at 4800 to 6200	125 at 4500 to 6200
Torque	Nm at RPM	250 at 1500 to 4700	270 at 1600 to 4200	250 at 1500 to 4700	270 at 1500 to 4400
Bore	diameter in mm	82.5	82.5	82.5	82.5
Stroke	mm	84.1	84.1	84.1	84.1
Compression ratio		9.6:1	9.6:1	9.6:1	9.6:1
RON		95	95	95	95
Fuel Injection System		Direct fuel injection	Direct fuel injection	Direct fuel injection	Direct fuel injection
Ignition sequence		1-3-4-2	1-3-4-2	1-3-4-2	1-3-4-2
Turbocharger		Turbocharger	Turbocharger	Turbocharger	Turbocharger
Variable valve timing		Intake and exhaust camshaft	Intake and exhaust camshaft	Intake and exhaust camshaft	Intake and exhaust camshaft
Valve stroke adjustment		No	No	No	No
Secondary Air Injection (AIR)		Yes	No	Yes	Yes
Valves per cylinder		4	4	4	4
Oil pressure control		Yes	Yes	Yes	Yes

Code Letters	CXCA	CNTA
Manufactured from	07/2014	From 11/2013

Protected by copyright. Copying for private or commercial purposes, in part or in whole, is not permitted unless authorised by Volkswagen AG. Volkswagen AG does not guarantee or accept any liability with respect to the correctness and completeness of this document. Copyright by Volkswagen AG.

Code Letters		CXCA	CNTA
Emissions values		SULEV	SULEV
Displacement	liter	2.0	2.0
Output	kW at RPM	155 at 4300 to 6200	155 at 4300 to 6200
Torque	Nm at RPM	350 at 1600 to 4200	350 at 1600 to 4200
Bore	diameter in mm	82.5	82.5
Stroke	mm	92.8	92.8
Compression ratio		9.6:1	9.6:1
RON		95	95
Fuel Injection System		Direct fuel injection	Direct fuel injection
Ignition sequence		1-3-4-2	1-3-4-2
Turbocharger		Turbocharger	Turbocharger
Variable valve timing		Intake and exhaust camshaft	Intake and exhaust camshaft
Valve stroke adjust-ment		Yes	Yes
Secondary Air Injection (AIR)		Yes	Yes
Valves per cylinder		4	4
Oil pressure control		Yes	Yes

Codes		CXCB
Manufactured from		12/2014
Emissions values		SULEV
Displacement	liters	2.0
Output	kW at RPM	162 at 4500 to 6200
Torque	Nm at RPM	350 at 1600 to 4400
Bore	diameter in mm	82.5
Stroke	mm	92.8
Compression ratio		9.6:1
Research Octane Number (RON)		95
Injection System		Direct fuel injection
Ignition sequence		1-3-4-2
Turbocharger, Supercharger		Turbocharger
Variable valve timing		Intake and exhaust camshaft
Valve stroke adjustment		Yes
Secondary air injection (AIR)		Yes
Valves per cylinder		4
Oil pressure control		Yes

Protected by copyright. Copying for private or commercial purposes, in part or in whole, is not permitted unless authorised by Volkswagen AG. Volkswagen AG does not guarantee or accept any liability with respect to the correctness of information in this document. Copyright by Volkswagen AG.

3 Repair Information

⇒ “3.1 Clean Working Conditions”, page 5 .

⇒ “3.2 Engine Contaminants”, page 5 .

⇒ “3.3 Contact Corrosion”, page 5 .

⇒ “3.4 Wire Routing and Securing”, page 5 .

⇒ “3.5 Cooler and Condenser Assembly”, page 6 .

⇒ “3.6 Vacuum System, Checking”, page 6 .

3.1 Clean Working Conditions

When working on the fuel supply/injection system, pay careful attention to the following “5 rules” of cleanliness:

- Thoroughly clean the connecting points and the surrounding area before loosening.
- Place the removed parts on a clean surface and cover them. Only use lint-free cloths!
- Carefully cover or seal opened components if the repair will not be done immediately.
- Install only clean parts: remove the replacement parts from their packaging just before installing them. Do not use parts that have been stored loose (for example, in tool boxes etc.).
- If the system is open: do not work with compressed air. Do not move vehicle.
- Make sure no fuel gets onto the fuel hoses. If necessary, wipe off the fuel hoses immediately.
- Protect any disconnected connectors from dirt and moisture and connect them only when they are completely dry.

3.2 Engine Contaminants

Special tools and workshop equipment required

- Engine Bung Set - VAS6122-
- To prevent foreign objects from entering when working on the engine, seal open intake and exhaust channels with suitable plugs, for example from the Engine Bung Set - VAS6122- .

3.3 Contact Corrosion

Contact corrosion can occur if incorrect fasteners (bolts, nuts, washers, etc.) are used.

For this reason, only fasteners with a special surface coating are installed.

In addition, rubber or plastic parts and adhesives are made of non-conductive materials.

If there are doubts about whether the parts are suitable, then use new parts. Refer to the Parts Catalog.

3.4 Wire Routing and Securing

- Mark the individual fuel, hydraulic and vacuum lines, the EVAP system lines or the electrical wires before disconnecting and/or removing them. This will prevent a mix-up when reconnecting them and will ensure the original installation location is kept.
- If necessary, draw sketches or take pictures.

Protected by copyright. Copying for private or commercial purposes, in part or in whole, is not permitted unless authorised by Volkswagen AG. Volkswagen AG does not guarantee or accept any liability with respect to the correctness of information in this document. Copyright by Volkswagen AG.

- Due to the limited space inside the engine compartment, be especially careful when working near moving or hot parts to avoid damaging the lines.

3.5 Cooler and Condenser Assembly

When assembled correctly, the radiator, condenser and turbocharger may have slight impressions on their fins. It is not damage. Do no replace the cooler, condenser or turbocharger because of impressions like that.

3.6 Vacuum System, Checking

Special tools and workshop equipment required

- Hand Vacuum Pump - VAS6213-

Procedure

– Check all vacuum lines in the vacuum system for:

- Cracks
- Damage caused by animals
- Crimps
- Leaks

– Check the vacuum lines leading both to and from the solenoid valve to the respective component.

– If there is a fault, check all the vacuum lines for the named component, but also all the vacuum lines to the other components.

– If using the Hand Vacuum Pump - VAS6213- does not produce any pressure or if the pressure drops again right away, then check the hand vacuum pump and the connection hoses for leaks.

Protected by copyright. Copying for private or commercial purposes, in part or in whole, is not permitted unless authorised by Volkswagen AG. Volkswagen AG does not guarantee or accept any liability with respect to the correctness of information in this document. Copyright by Volkswagen AG.

4 Special Tools

Special tools and workshop equipment required

- Hand Vacuum Pump - VAS6213-

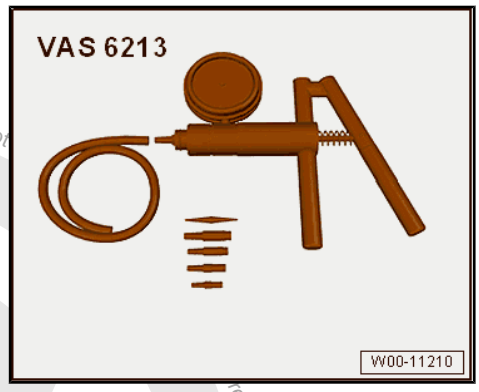

- Engine Bung Set - VAS6122-

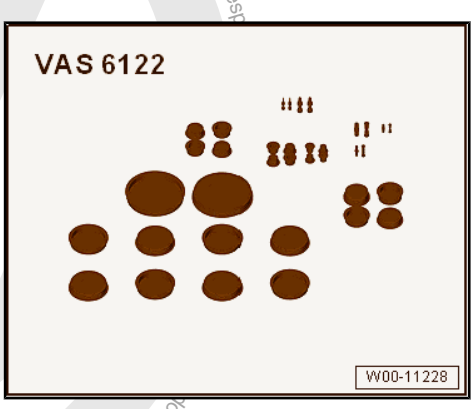

Protected by copyright. Copying for private or commercial purposes, in part or in whole, is not permitted unless authorised by Volkswagen AG. Volkswagen AG does not

10 – Engine Assembly

1 Engine, Removing and Installing

⇒ “1.1 Engine, Removing”, page 8 .

⇒ “1.2 Engine and Transmission, Separating”, page 19 .

⇒ “1.3 Engine, Securing on Engine and Transmission Holder”, page 23 .

⇒ “1.4 Engine, Installing”, page 24 .

1.1 Engine, Removing

Special tools and workshop equipment required

- Engine and Gearbox Jack - VAS6931-
- Engine/Gearbox Jack - Engine Support - T10359A-
- Engine/Gearbox Jack - Pin - T10359/2-
- Engine/Gearbox Jack - Adapter - T10359/3-
- Fuse Element from Transmission Support - 3282-
- Pry Lever - 80–200-
- Shop Crane - Drip Tray - VAS6208-
- Hose Clamps - Up To 25mm - 3094-
- Protective Eyewear
- Safety Gloves
- Step Ladder

Caution

This procedure contains mandatory replaceable parts. Refer to component overview prior to starting procedure.

Mandatory Replacement Parts

- Bolts - Engine Mount

Note

The engine with transmission is removed downward. For this reason it is necessity to remove the subframe.

Protected by copyright. Copying for private or commercial purposes, in part or whole, is not permitted unless authorised by Volkswagen AG. Volkswagen AG does not guarantee or accept any liability with respect to the correctness of information in this document. Copyright by Volkswagen AG.

Procedure

CAUTION

The coolant system is under pressure when the engine is warm. Risk of scalding due to hot steam and hot coolant.

Possibility of burning or scalding the skin and other parts of the body.

- **Wear safety gloves.**
- **Wear protective eyewear.**
- **Reduce the pressure: cover the coolant reservoir cap with a cloth and carefully open.**

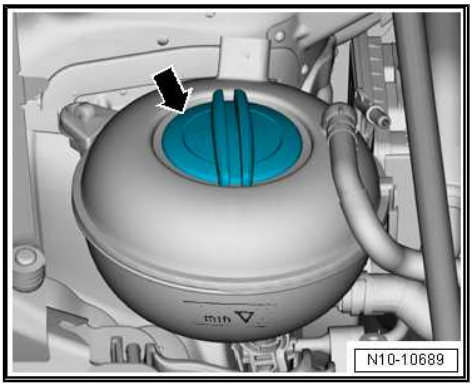

- Remove the cap -arrow- from the coolant expansion tank.
- Remove the subframe and steering gear. Refer to ⇒ Suspension, Wheels, Steering; Rep. Gr. 40 ; Subframe; Subframe with Steering Gear, Removing and Installing .
- Remove the left and right front wheel housing liners front section. Refer to ⇒ Body Exterior; Rep. Gr. 66 ; Wheel Housing Liner; Front Wheel Housing Liner, Removing and Installing .
- Place the Shop Crane - Drip Tray - VAS6208- underneath.
- Disconnect the connector -1-.
- Lift the clamp -3- and remove the lower right coolant hose from the radiator.
- Allow the coolant to drain.

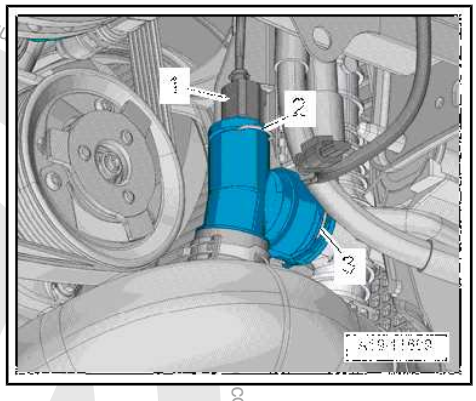

- Remove the engine cover. Refer to ⇒ “3.1 Engine Cover, Removing and Installing”, page 38 .
- Remove the bolts -1 and 3-.

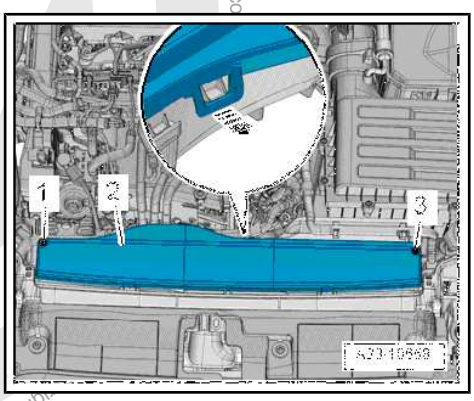

- Open the retainer in direction of -arrow- and remove the cover -2-.
- Free up the coolant hose -2-.

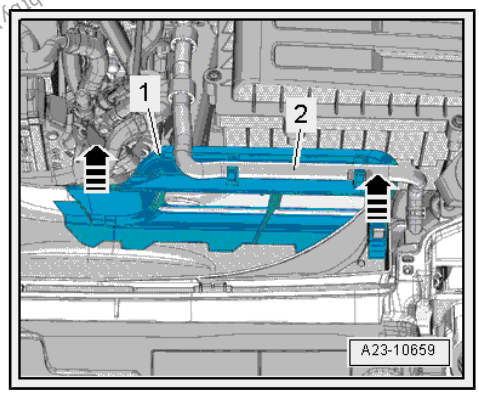

Protected by copyright. Copying for private or commercial purposes, in part or in whole, is not permitted unless authorised by Volkswagen AG. Volkswagen AG does not guarantee the accuracy and completeness of this electronic data.

Protected by copyright. Copying for private or commercial purposes, in part or in whole, is not permitted unless authorised by Volkswagen AG. Volkswagen AG does not guarantee

– Open the retaining tabs in direction of -arrows-, remove the upper air duct -1-.
– Disconnect the vacuum hose -1-.
– Loosen the clamp -2- and remove the air guide hose.

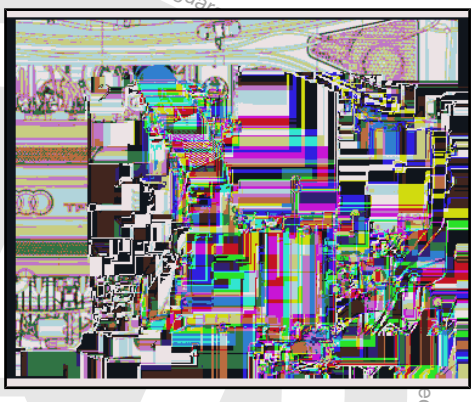

– Remove the air filter housing -3-.

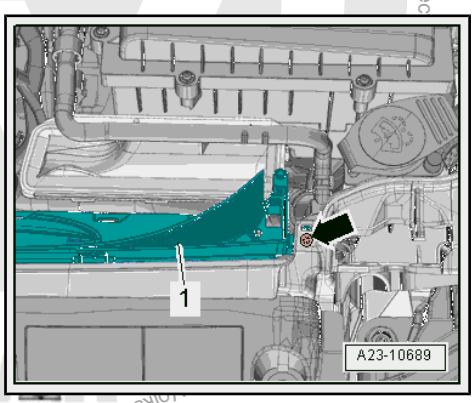

– Remove the left and right bolts -arrow-.
– Unclip the air guide lower section -1- and remove.

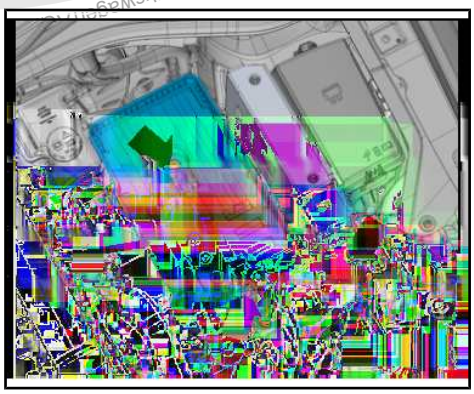

– Remove the battery tray. Refer to ⇒ Electrical Equipment; Rep. Gr. 27 ; Battery; Battery Tray, Removing and Installing .
– Disconnect the vacuum hose -2-.
– Press the release button on the vacuum hose -1-, remove the hose from the vacuum pump.

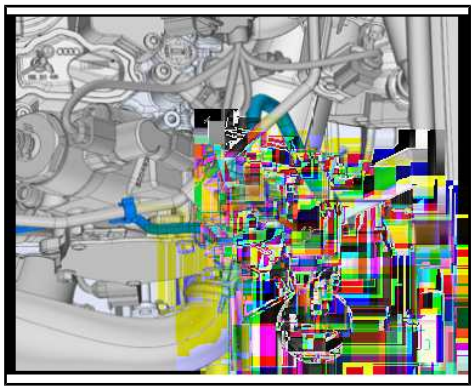

Vehicles without Auxiliary Heater

– Lift the clamps -arrows-, remove the coolant hoses from the heater heat exchanger.

– Hold the coolant hoses downward and drain the coolant.

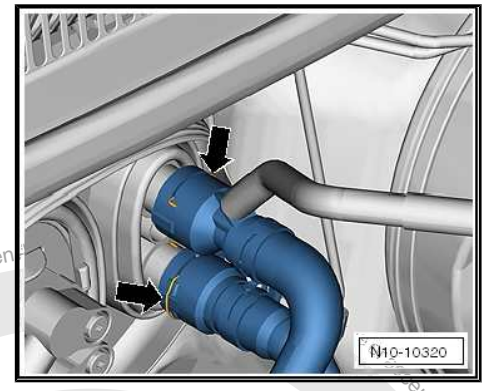

Vehicles with Parking Heater

– Loosen the hose clamp -1-, lift the clamps -arrows- and remove the coolant hoses.

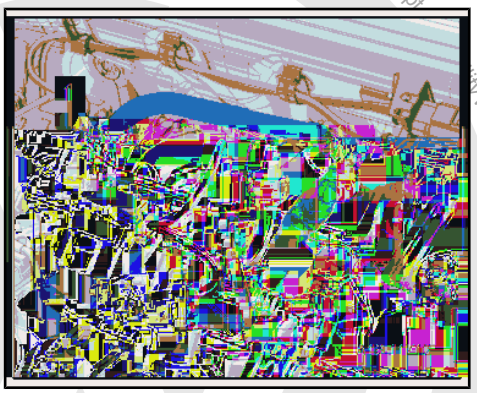

Continuation for All Vehicles

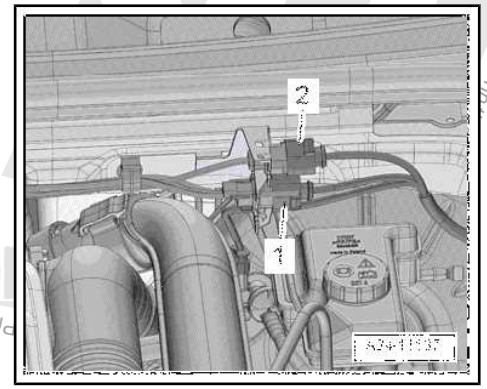

Protected by copyright. Copying for private or commercial purposes, in part or in whole, is not permitted unless authorised by Volkswagen

– Remove the connectors -1 and 2- from the holder and disconnect them. Then free up the electric wires.
– Remove the bolt -2- and the screw-type clamp.
– Remove the nuts -1 and 3-.

Note

- *The installed position is shown in the illustration with the engine removed.*
- *Ignore -4-.*

CAUTION

Fuel system is under pressure.
Risk of injury from fuel spraying out.
- **Wear protective eyewear.**
- **Wear safety gloves.**
- **Reduce the pressure: Lay clean cloths around the connection location and carefully open the connection point.**

– Disconnect the hose couplings -1 and 2-. Refer to ⇒ Fuel Supply System; Rep. Gr. 20 ; Connector Couplings; Connector Couplings, Separating . Loosen the hose clamp from the expansion tank -3-.

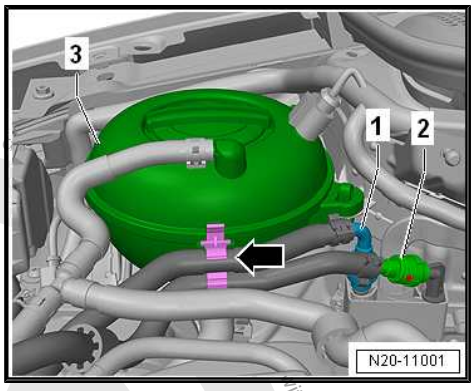

– Loosen the clamps -1 and 2- and remove the coolant hoses.

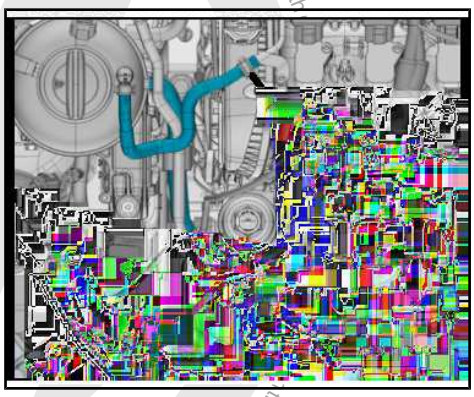

Protected by copyright. Copying for private or commercial purposes, in part or in whole is not permitted unless authorised by Volkswagen AG. Volkswagen AG
Copyright by Volkswagen AG.

– Lift the clamp -arrow- and remove the upper left coolant hose from the radiator.

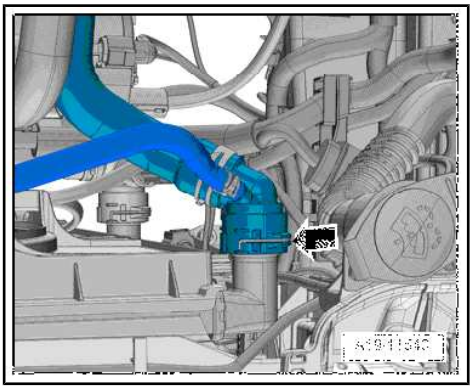

Note

Use the Pry Lever - 80-200- for removing the spiral clips in the following procedure.

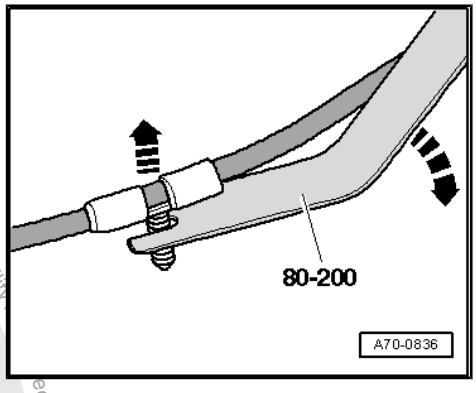

– Disconnect the connector -1- from the Engine Control Module - J623- . Refer to
⇒ “6.1 Engine Control Module J623 , Removing and Installing”, page 321 .

– Disconnect the connectors -2 and 3- from the bracket.

– Free up the wires.

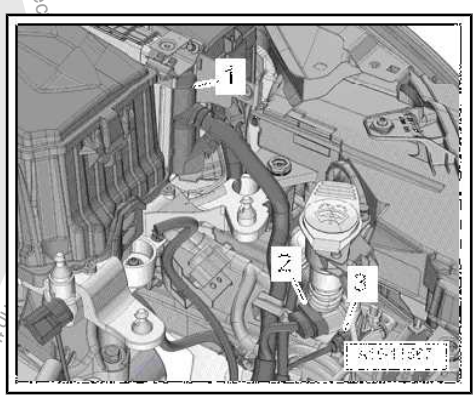

– Release the retainers in direction of -arrows-, and remove the cover -1- from the engine compartment E-box.

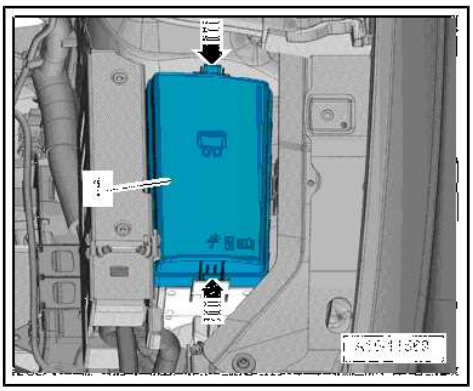

Protected by copyright. Copying for private or commercial purposes, in part or in whole, is not permitted unless authorised by Volkswagen AG. Volkswagen AG does not guarantee or accept any liability with this document. Copyright by Volkswagen AG.

– Open the retainers with a screwdriver in direction of -arrow-, remove the cover -1- for the engine compartment E-box upward.

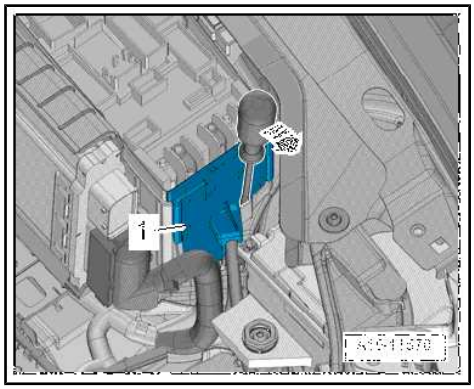

– Remove the nut -arrow-, disconnect and free up the wires.

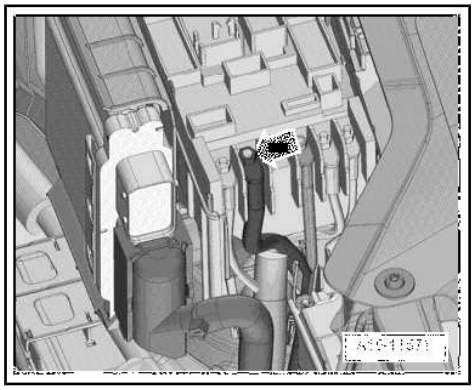

Vehicles with a Manual Transmission

– Disconnect the connector -2-.

– Push back the B+ terminal protector -1- and disconnect the B + wire from the starter solenoid switch.

– Remove the nut -3- and remove the ground wire.

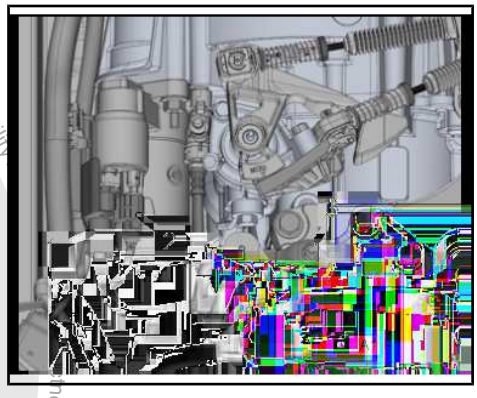

Note

Depending on the version the ground cable is attached to the starter bolt.

– Disconnect the left front connectors from the transmission:

1 - For Transmission Neutral Position Sensor - G701-

2 - For Back-Up Lamp Switch - F4-

– Remove the gearshift and the selector lever cable from the transmission, remove the cable mounting bracket and move it to the side with the cables. Refer to the ⇒ Controls, Housing; Rep. Gr. 34 ; Selector Mechanism; Selector Mechanism, Removing and Installing repair manual.

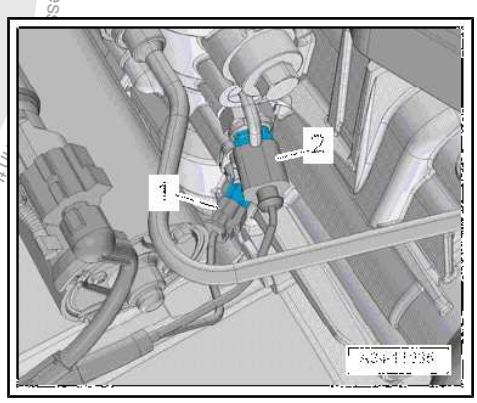

Protected by copyright. Copying for private or commercial purposes, in part or in whole, is not permitted unless authorised by Volkswagen AG. Volkswagen AG does not guarantee or accept any liability with respect to the correctness of information in this document. Copyright by Volkswagen AG.

– Clamp the hose/line assembly -A- to the slave cylinder with the Hose Clamps - Up To 25mm - 3094- .
– Pull hose/line assembly clip -arrow- out as far as stop.
– Remove pipe/hose line assembly from the slave cylinder ventilator.

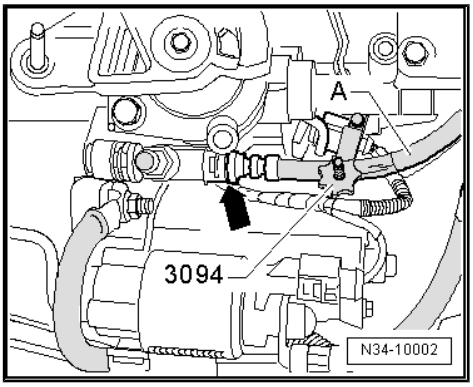

Vehicles with DSG® Transmission

– Selector lever cable from the transmission and pull it out of the cable bracket. Refer to the ⇒ Controls, Housing; Rep. Gr. 34 ; Selector Mechanism; Selector Mechanism, Removing and Installing repair manual.
– Disconnect the connector -2-.
– Push back the B+ terminal protector -1- and disconnect the B + wire from the starter solenoid switch.
– Remove the nut -3- and remove the ground wire.

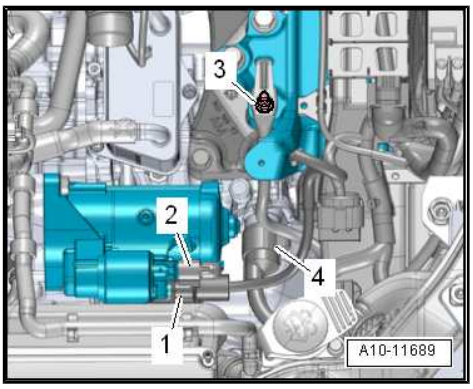

Note

Depending on the version the ground cable is attached to the starter bolt.

– To discharge static electricity, touch vehicle ground with hand (without gloves).
– Do not touch contacts in transmission connector with hands.
– Disconnect the connector -4- for the DSG Transmission Mechatronic - J743- , by turning screw connection counterclockwise.

Continuation for All

– Remove the bolts -arrows- for the transmission (about 2 turns).

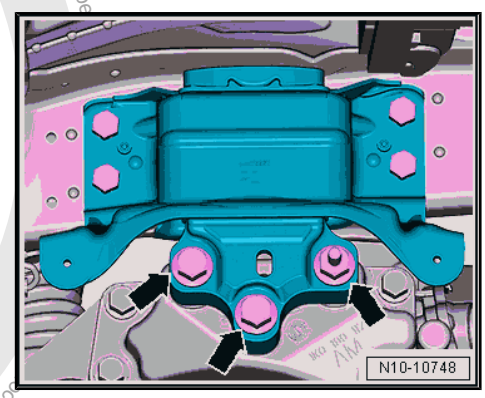

Protected by copyright. Copying for private or commercial purposes, in part or in whole, is not permitted unless authorised by Volkswagen AG. Volkswagen AG does not guarantee or accept any liability with respect to the accuracy of this document. Copyright by Volkswagen AG.

– Remove the bolts -arrows- for the engine mount (about two turns).

– Remove the fan shroud. Refer to
⇒ “4.5 Fan Shroud, Removing and Installing”, page 249 .

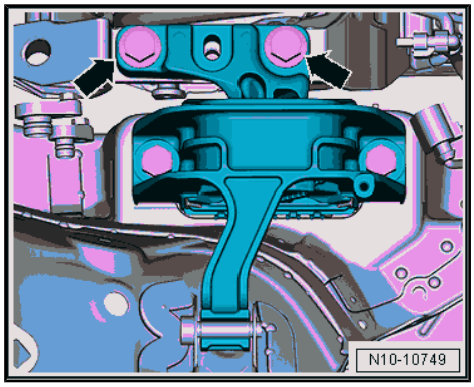

– Open the clamp -1 and 2- and remove the air duct hose.

– Seal the open lines and connections with clean plugs from the Engine Bung Set - VAS6122- .

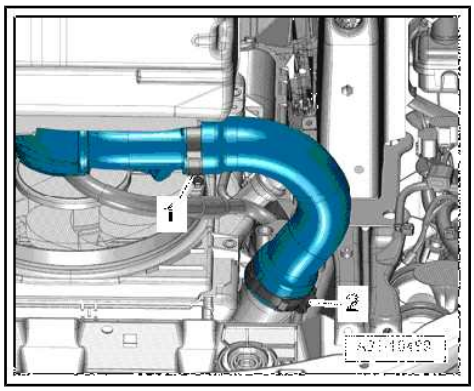

– Free up the coolant hose -3-.

– Remove the bolts -arrows-.

– Loosen the hose clamp -2-.

– Disconnect the connector -1- on the Charge Air Pressure Sensor - G31- .

– Remove the right air guide pipe.

– Before removing the ribbed belt, mark the running direction with chalk or a felt-tip pen for reinstallation.

– Pivot the tensioner clockwise in direction of -arrow- to release the tension on the ribbed belt.

– Remove the ribbed belt from the A/C compressor ribbed belt pulley and release the tension on the tensioning device. If necessary, remove the Locking Pin - T10060A- .

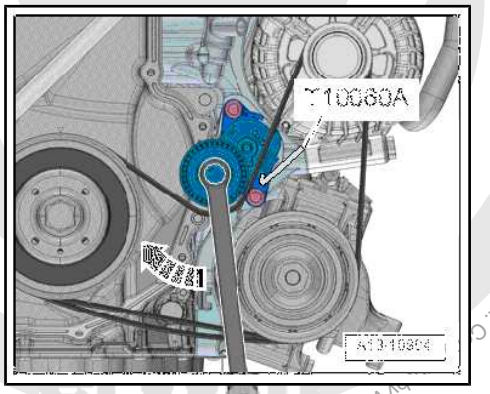

CAUTION

Danger of frostbite from refrigerant.

– Do not open the A/C system refrigerant circuit.

Protected by copyright. Copyright by Volkswagen AG. For private or commercial purposes, in part or in whole, is not permitted unless authorised by Volkswagen AG. Volkswagen AG does not accept any liability with respect to the correctness of information in this document.

– Disconnect the connector -1- on the A/C Compressor Regulator Valve - N280- .
– Remove the bolts -arrows-.
– Remove the A/C compressor from the bracket with the refrigerant hoses attached and tie up to the right side. While doing so, do not bend, twist or stretch the refrigerant lines and hoses.
– Remove the left and right drive axles from the flange shafts. Refer to ⇒ Suspension, Wheels, Steering; Rep. Gr. 40 ; Drive Axle; Drive Axle, Removing and Installing .
– Tie up the drive axles to the rear.

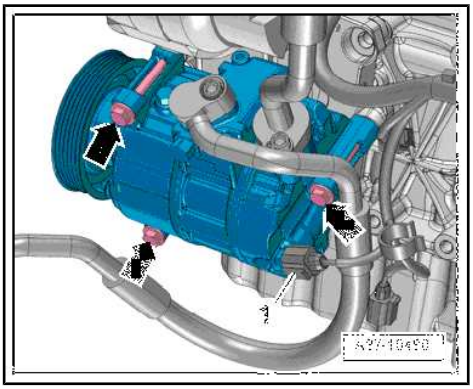

Note

Be careful not to damage the protective coating on the drive axle.

– Loosen the clamping sleeve -arrow- and push it toward the rear.
– Remove the catalytic converter with the front exhaust pipe.

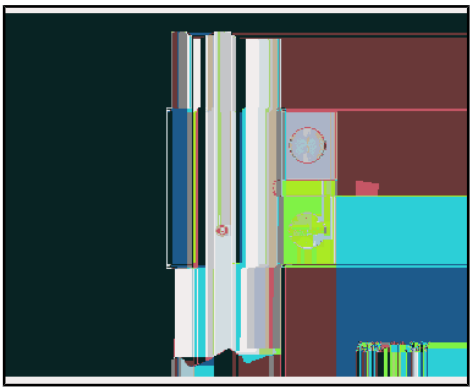

– Remove bolt -arrow-, push the bracket for the wiring harness aside.

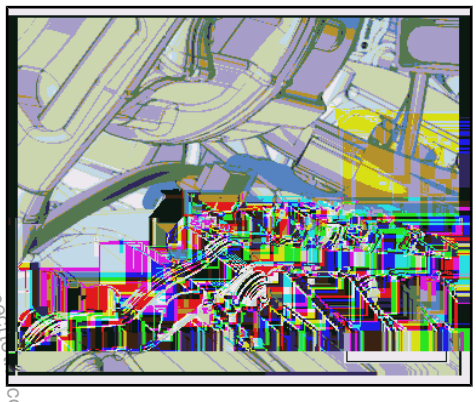

Protected by copyright. Copying for private or commercial purposes, in part or in whole, is not permitted unless authorised by Volkswagen AG. Volkswagen AG does not guarantee or accept any liability with respect to the correctness of information in this document. Copyright by Volkswagen AG.

– Install the Adapter - T10359/3- , as shown in the illustration, on the Engine/Gearbox Jack - Engine Support - T10359A- .

– Tighten Engine/Gearbox Jack - Pin - T10359/2- with support element -A- from the Transmission Support - 3282- to the engine bracket.

– Place the Engine/Gearbox Jack - Engine Support - T10359A- in the Engine and Gearbox Jack - VAS6931- .

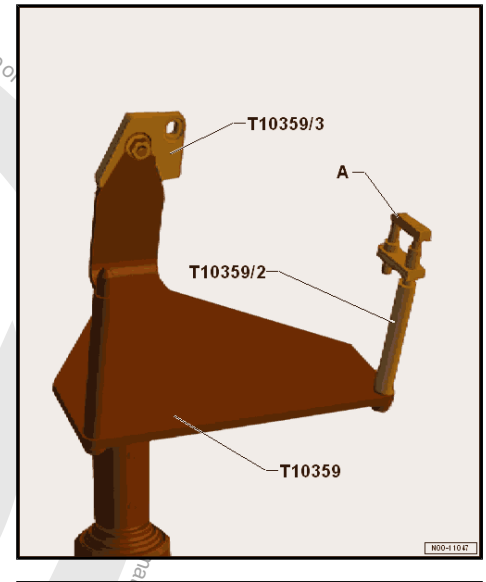

– Install the Engine/Gearbox Jack - Engine Support - T10359A- on the cylinder block. Fasten the bolt -A- with the spacer sleeve on the cylinder block. Tightening specification 20 Nm.

– Secure the engine with the support element -B- and lift the engine with the transmission.

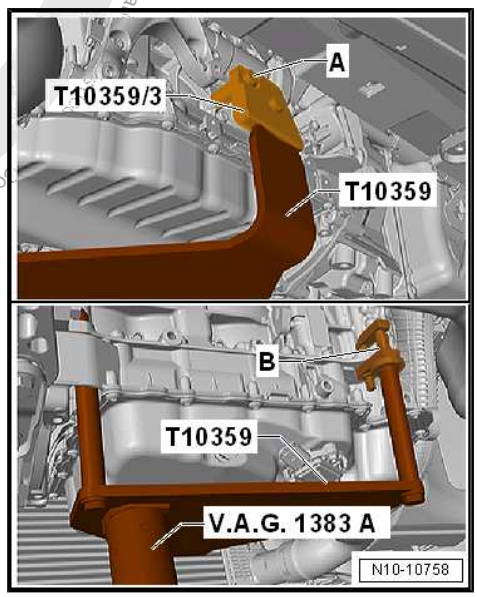

– Remove the engine mount bolts -arrows- completely.

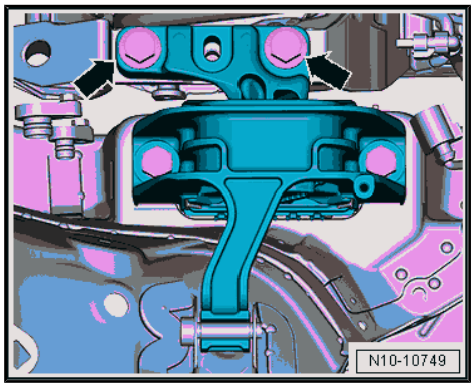

Protected by copyright. Copyright by Volkswagen AG.

– Remove the transmission mount bolts -arrows- completely.

– Carefully lower the engine/transmission sub-assembly in direction of -arrow 1-.

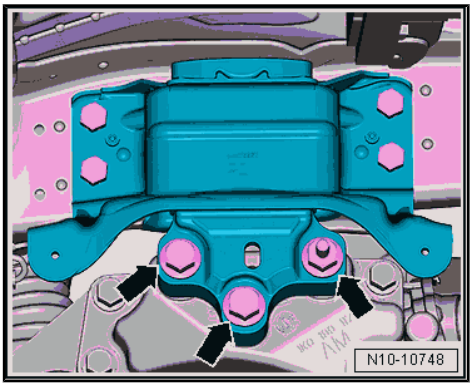

– Carefully guide the engine/transmission sub-assembly forward and out to the left in direction of -arrow 2-.

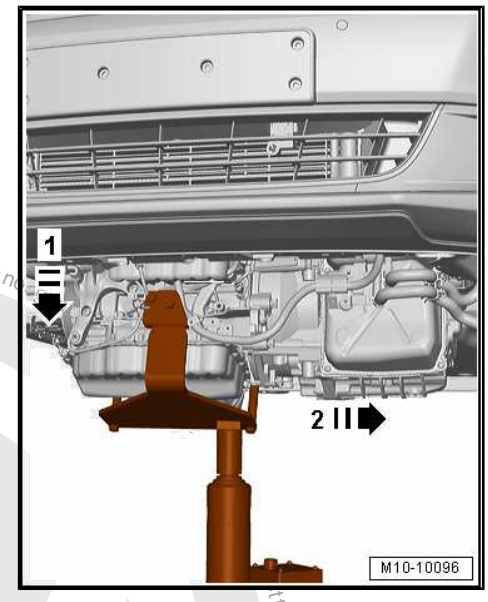

1.2 Engine and Transmission, Separating

⇒ "1.2.1 Engine and Transmission, Separating, Vehicles with Manual Transmission", page 19 .

⇒ "1.2.2 Engine and Transmission, Separating, Vehicles with DSG® Transmission", page 21 .

1.2.1 Engine and Transmission, Separating, Vehicles with Manual Transmission

Special tools and workshop equipment required

- Engine Support Bridge - Additional Hooks (2 pc.) - 10-222A/2-
- Shop Crane - VAS6100-
- Transmission Lift Hook - T40013-
- Engine/Gearbox Jack - Engine Support - T10359A-

Caution

This procedure contains mandatory replaceable parts. Refer to component overview prior to starting procedure.

Mandatory Replacement Parts

- Bolts - Transmission Mount

Copyright by Volkswagen AG. Volkswagen AG does not guarantee or accept any liability with respect to the correctness of information in this document. Copyright by Volkswagen AG. Protected by copyright. Copying for private or commercial purposes, in part or in whole, is not permitted unless authorised by Volkswagen AG.

♦ Bolts - Engine to Transmission

Procedure

- Engine/transmission assembly removed and secured on the Engine/Gearbox Jack - Engine Support - T10359A- .

– Free up the wire on the bracket -arrow-.

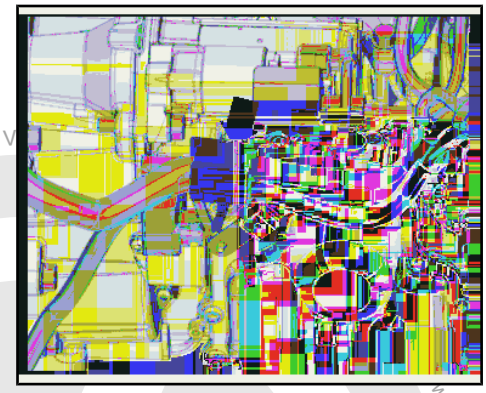

– Remove the bolts -1 and 2- and then remove the starter from the transmission.

– Free up the wiring harness -1 and 2- from the air guide pipe.

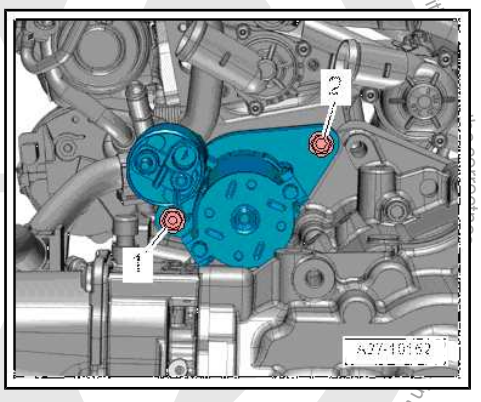

– Loosen the screw-type clamp -3-.

– Remove the bolts -arrows- and remove the air guide pipe.

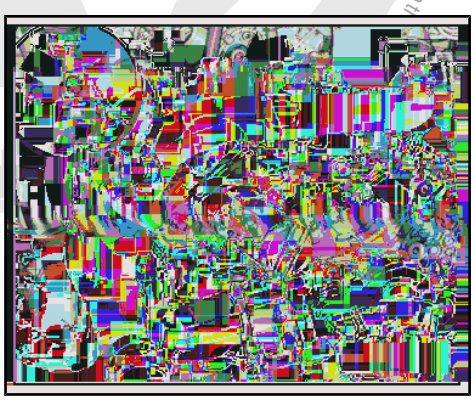

– Remove bolts -arrows- and remove the transmission support.

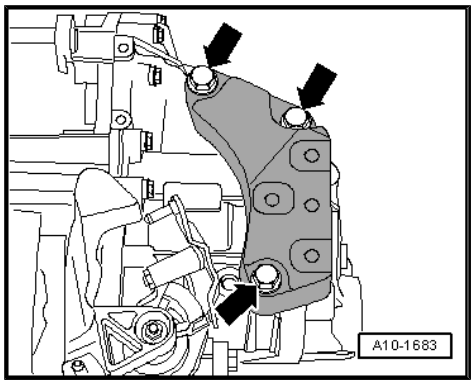

Protected by copyright. Copying, private or commercial purposes, in part or in whole, is not permitted unless authorised by Volkswagen AG. V

– Install the Transmission Lift Hook - T40013- on the transmission and close locking device.

– Engage the Shop Crane - VAS6100- with Engine Support Bridge - Additional Hooks (2 pc.) - 10-222A/2- on the transmission lift hook.

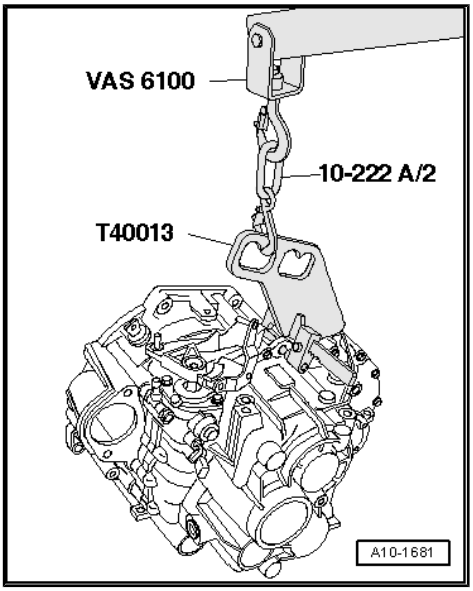

Note

Ignore items -4, 5, and A-.

– Remove the bolts -1, 2, 3, 6, 7, 8, and 9- connecting the transmission to the engine.

– Remove the transmission from the engine.

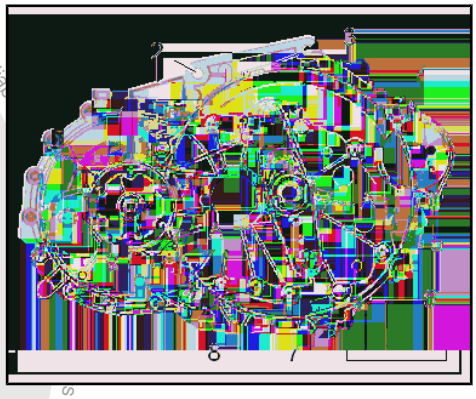

1.2.2 Engine and Transmission, Separating, Vehicles with DSG® Transmission

Special tools and workshop equipment required

- Engine Support Bridge - Additional Hooks (2 pc.) - 10-222A/20-
- Hooks Engine Sling - Engine Bracket - 2024A/1- from the Engine Sling - 2024A-
- Shop Crane - VAS6100-
- Engine Bung Set - VAS6122-
- Hose Clamps - Up To 25mm - 3094-

Caution

This procedure contains mandatory replaceable parts. Refer to component overview prior to starting procedure.

Mandatory Replacement Parts

- Bolts - Engine to Transmission

Copyright by Volkswagen AG. Volkswagen AG does not guarantee or accept any liability for the use of information in this document. Copyright by Volkswagen AG. Copying for private or commercial purposes, in part or in whole, is not permitted unless authorised by Volkswagen AG.

Procedure

- Engine/transmission assembly removed and secured on the Engine Support - T10497- .

– Remove the starter. Refer to ⇒ Electrical Equipment; Rep. Gr. 27 ; Starter; Starter, Removing and Installing .

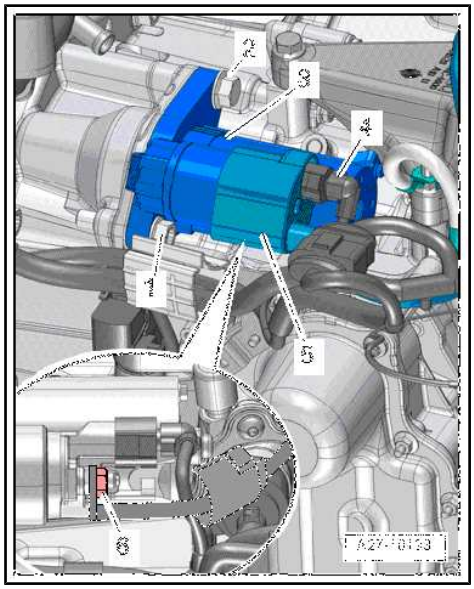

– Remove the nuts -arrows-, and remove the front bracket from the transmission fluid pan.

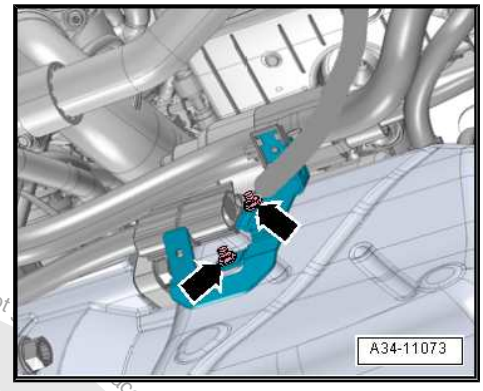

Note

The threaded bolts are welded to the front of the oil pan.

– Disconnect the connector -2-.

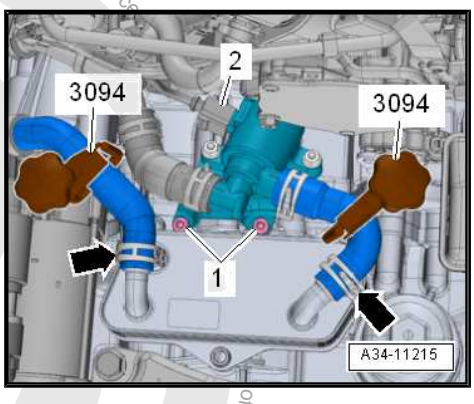

Note

Place a cleaning cloth underneath, to catch coolant leaking out.

– Loosen the hose clamps -arrows-, remove the coolant hoses from the transmission fluid cooling circuit.

– Remove the bolts -1- and set aside the Transmission Coolant Valve - N488- .

– Seal the open lines and connections with clean plugs from the Engine Bung Set - VAS6122- .

Note

Ignore Hose Clamps - Up To 25mm - 3094- .

Protected by copyright. Copying for private or commercial purposes, in part or in whole, is not permitted unless authorised by Volkswagen AG. Volkswagen AG does not guarantee the accuracy of information in this document. Copyright by Volkswagen AG.

– Attach the Engine Sling - 2024A- hooks to the transmission lifting eyes and secure it with the securing pin -arrow-.

– Hook the Shop Crane - VAS6100- with the Engine Support Bridge - Special Hook (2 pc.) - 10-222A/20- on the Engine Sling - Engine Bracket - 2024A/1- .

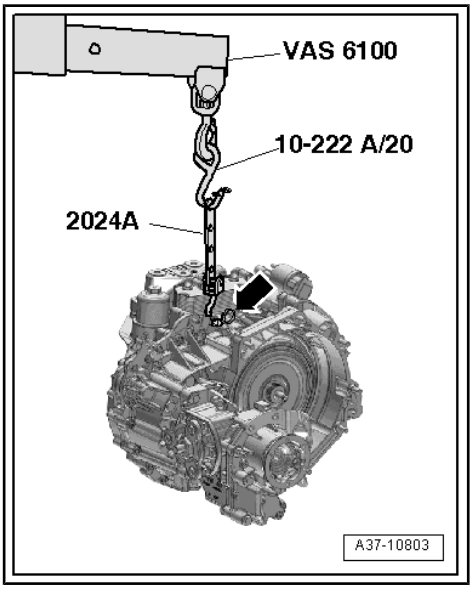

– Remove the bolts -1 to 8- for the transmission/engine connection.

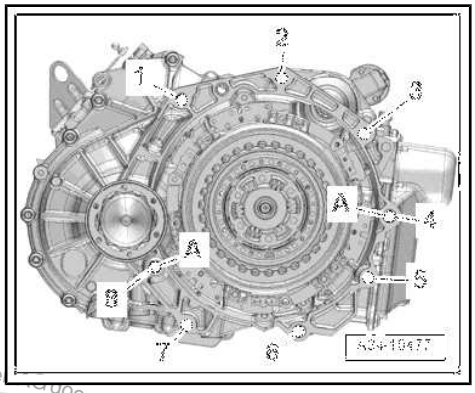

Note

Ignore item -A-.

– Remove the transmission from the engine.

1.3 Engine, Securing on Engine and Transmission Holder

Special tools and workshop equipment required

- Engine Sling - 2024A-
- Shop Crane - VAS6100-
- Engine And Transmission Holder - VAS6095-

Procedure

- The transmission is separated from the engine. Refer to ⇒ “1.2 Engine and Transmission, Separating”, page 19 .

– Unlock the retaining tab in direction of -arrow-, remove the left engine cover mount -1-.

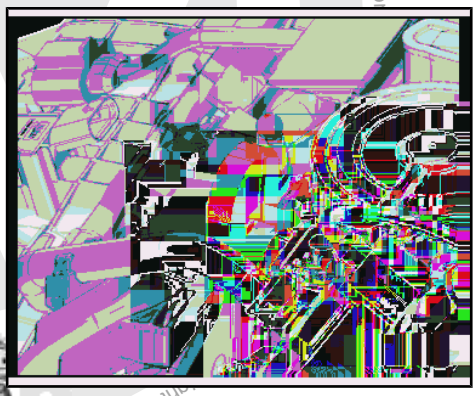

Protected by copyright. Copying for private or commercial purposes, in whole or in part, is not permitted unless authorised by Volkswagen AG. Volkswagen AG does not guarantee or accept any liability with respect to the content.

– Unclip the right engine cover mount -1-.

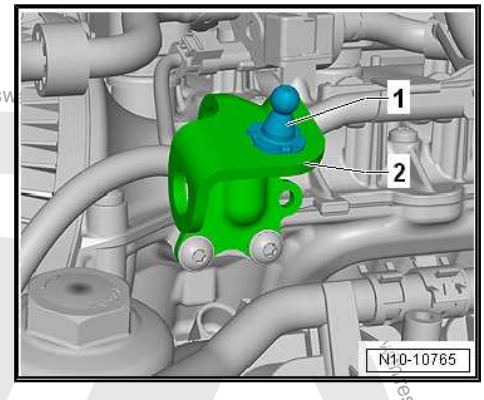

– Hook the Engine Sling - 2024A- to the engine and to the Shop Crane - VAS6100- .
– To be aligned to the center of gravity of the engine assembly, the hole rails must be inserted as shown in the illustration.
– Secure the mounting hooks and pins on the engine support bridge using securing pins -arrows-.
– Lower the engine from the Engine and Gearbox Jack - VAS6931- using the Shop Crane - VAS6100- .

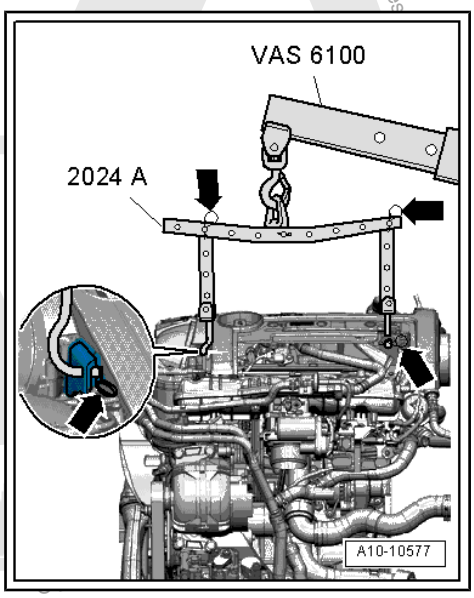

– Remove the transmission alignment sleeve and secure the transmission side of the engine on the Engine And Transmission Holder - VAS6095- .

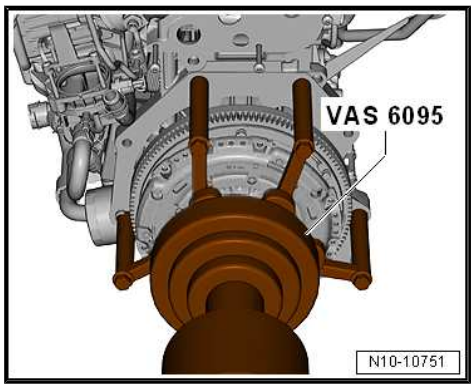

1.4 Engine, Installing

Caution

This procedure contains mandatory replaceable parts. Refer to component overview prior to starting procedure.

Mandatory Replacement Parts

- Bolts - Transmission Mount
- Bolts - Engine to Transmission

Protected by copyright. Copying for private or commercial purposes, in part or in whole, is not permitted unless authorised by Volkswagen AG. Volksw

Tightening Specifications

Note

- *The tightening specifications apply only to lightly greased, oiled, phosphated or blackened nuts and bolts.*
- *Additional lubricants, such as engine or transmission oil are permissible, although lubricants containing graphite are not.*
- *Do not use any ungreased parts.*
- *Tightening specification tolerance: ±15%.*

Component		Nm
Bolts and nuts	M6	10
	M7	15
	M8	20
	M10	40
	M12	65

- Refer to ⇒ "2.1 Overview - Subframe Mount", page 29 .
- Securing engine to transmission. Refer to ⇒ Rep. Gr. 34 ; Transmission, Removing and Installing; Transmission Tightening Specifications .

Procedure

Note

- *Replace the bolts that were tightened with an additional turn.*
- *Replace the self-locking nuts and bolts, sealing rings, seals and O-rings.*
- *The hose connections as well as the air guide pipes and hoses must be free of oil and grease before installing.*
- *Secure hose connections with standard production clamps. Refer to the Parts Catalog.*
- *During installation, all cable ties must be installed at the same location.*

– Install intermediate plate. Refer to
⇒ Fig. ""Installing Intermediate Plate"" , page 58 .

Note

The illustration shows a vehicle with DSG® transmission.

Protected by copyright. Copyright by Volkswagen AG. Volkswagen AG does not guarantee or accept any liability with respect to the correctness of information in this document. Copying for private or commercial purposes, in part or in whole, is not permitted unless authorised by Volkswagen AG.

– If the alignment sleeves -A- for centering the engine and transmission are missing inside the cylinder block, then install the sleeves.

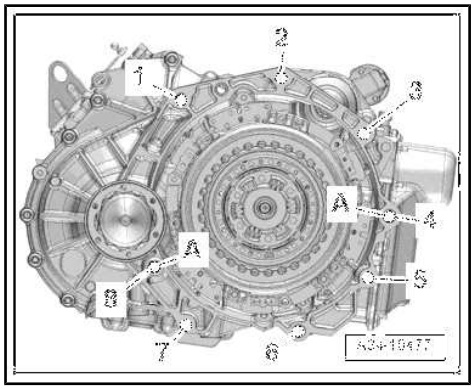

Vehicles with a Manual Transmission

– If a needle bearing is installed in the crankshaft, remove the needle bearing. Refer to
⇒ “3.4 Crankshaft Needle Bearing, Replacing”, page 65 .

– If the clutch release bearing is worn, replace it. Refer to ⇒ Manual Transmission; Rep. Gr. 30 ; Clutch Mechanism; Clutch Release Mechanism, Servicing .

– Lightly lubricate the transmission input shaft splines. Refer to the Parts Catalog.

– Check the clutch plate alignment.

Vehicles with DSG® Transmission

– If no needle bearing is installed in crankshaft, install needle bearing. Refer to ⇒ Engine Mechanical, Fuel Injection and Ignition; Rep. Gr. 13 ; Crankshaft; Crankshaft Needle Bearing, Replacing .

Continuation for All Vehicles

– Attach transmission to engine.

– Install the starter. Refer to ⇒ Electrical Equipment; Rep. Gr. 27 ; Starter; Starter, Removing and Installing .

– Guide the engine/transmission assembly into the body.

– Install the bolts -arrows- for the engine mount by hand all the way.

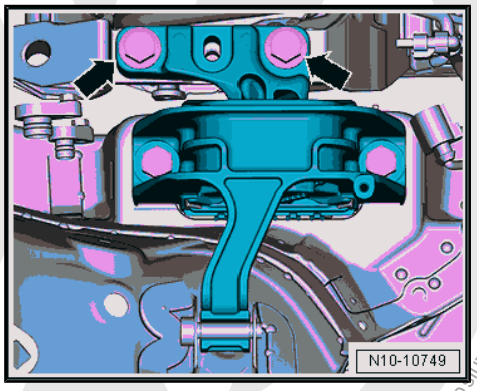

Protected by copyright. Copying for private or commercial purposes, in part or in whole, is not permitted unless authorised by Volkswagen AG. Volkswagen AG does not guarantee or accept any liability with respect to the correctness of information in this document. Copyright by Volkswagen AG.

– Install the bolts -arrows- for the transmission mount by hand until it is in position.

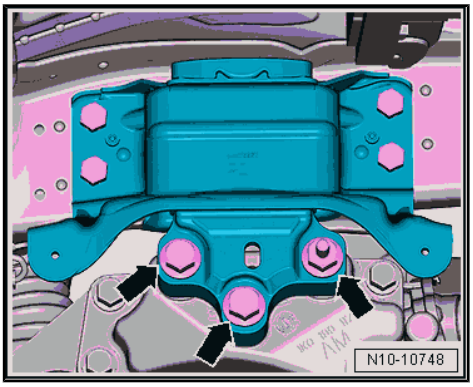

Note

Only tighten the bolts to the specification when installing the subframe mount. Refer to
⇒ "2.1 Overview - Subframe Mount", page 29 .

– Remove the Engine/Gearbox Jack - Engine Support - T10359A- from the engine.

– Install drive axles. Refer to ⇒ Suspension, Wheels, Steering; Rep. Gr. 40 ; Drive Axle; Drive Axle, Removing and Installing .

Vehicles with a Manual Transmission

– Install the clutch slave cylinder. Refer to ⇒ Controls, Housing; Rep. Gr. 34 ; Selector Mechanism; Selector Mechanism, Removing and Installing .

– Install the cables with the cable bracket. Refer to ⇒ Manual Transmission; Rep. Gr. 30 ; Clutch Mechanism; Component Location Overview - Clutch Mechanism .

Vehicles with DSG® Transmission

– Install and adjust the selector lever cable. Refer to ⇒ Rep. Gr. 34 ; Selector Mechanism; Overview - Selector Mechanism .

Continuation for All Vehicles

– Install the Air Conditioning (A/C) compressor. Refer to ⇒ Heating, Ventilation and Air Conditioning; Rep. Gr. 87 ; A/C Compressor; Overview - A/C Compressor Power Unit .

– Install the ribbed belt. Refer to
⇒ "1.2 Ribbed Belt, Removing and Installing", page 46 .

– Adjust the subframe mount. Refer to
⇒ "2.6 Subframe Mount, Adjusting", page 36 .

– Install the battery tray. Refer to ⇒ Electrical Equipment; Rep. Gr. 27 ; Battery; Overview - Battery .

– For the electrical connections and wiring routing. Refer to ⇒ Electrical Equipment; Rep. Gr. 97 ; Relay Carriers, Fuse Panels and E-Boxes; Component Location Overview - Relay Carriers, Fuse Panels and E-Boxes and ⇒ Wiring diagrams, Troubleshooting & Component locations.

– Install the air filter housing. Refer to
⇒ "3.2 Air Filter Housing, Removing and Installing", page 294 .

– Install the engine cover. Refer to
⇒ "3.1 Engine Cover, Removing and Installing", page 38 .

– Check the oil level.

– Attach the coolant hoses to the heater core. Refer to
⇒ Fig. ""Connect the Coolant Hose to the Coupling"" , page 245 .

– Fill with coolant. Refer to ⇒ page 218 .

Note

Do not reuse used coolant.

Protected by copyright. Copyright by Volkswagen AG. Volkswagen AG does not guarantee or accept any liability with respect to the correctness of information in this document. Copyright by Volkswagen AG.

– Install the subframe. Refer to ⇒ Suspension, Wheels, Steering; Rep. Gr. 40 ; Subframe; Subframe without Steering Gear, Removing and Installing .

– Install front wheel housing liners. Refer to ⇒ Body Exterior; Rep. Gr. 66 ; Wheel Housing Liner; Front Wheel Housing Liner, Removing and Installing .

– After replacing the engine the adaptation value of the Engine Control Module (ECM) must be adapted. To do this turn on the ignition and select the following menu items on the Vehicle Diagnostic Tester :

♦ 01 - Engine Electronics

♦ Guided Functions

♦ 01 - Adaptation After Repair Work on the Chain Drive

Protected by copyright. Copying for private or commercial purposes, in part or in whole, is not permitted unless authorised by Volkswagen AG. Volkswagen AG does not guarantee or accept any liability with respect to the correctness of information in this document. Copyright by Volkswagen AG.

2 Subframe Mount

⇒ “2.1 Overview - Subframe Mount”, page 29

⇒ “2.2 Engine Mount, Removing and Installing”, page 30

⇒ “2.3 Transmission Mount, Removing and Installing”, page 31

⇒ “2.4 Pendulum Support, Removing and Installing”, page 33

⇒ “2.5 Engine, Supporting in Installed Position”, page 33

⇒ “2.6 Subframe Mount, Adjusting”, page 36

⇒ “2.7 Subframe Mount, Checking Adjustment”, page 37

2.1 Overview - Subframe Mount

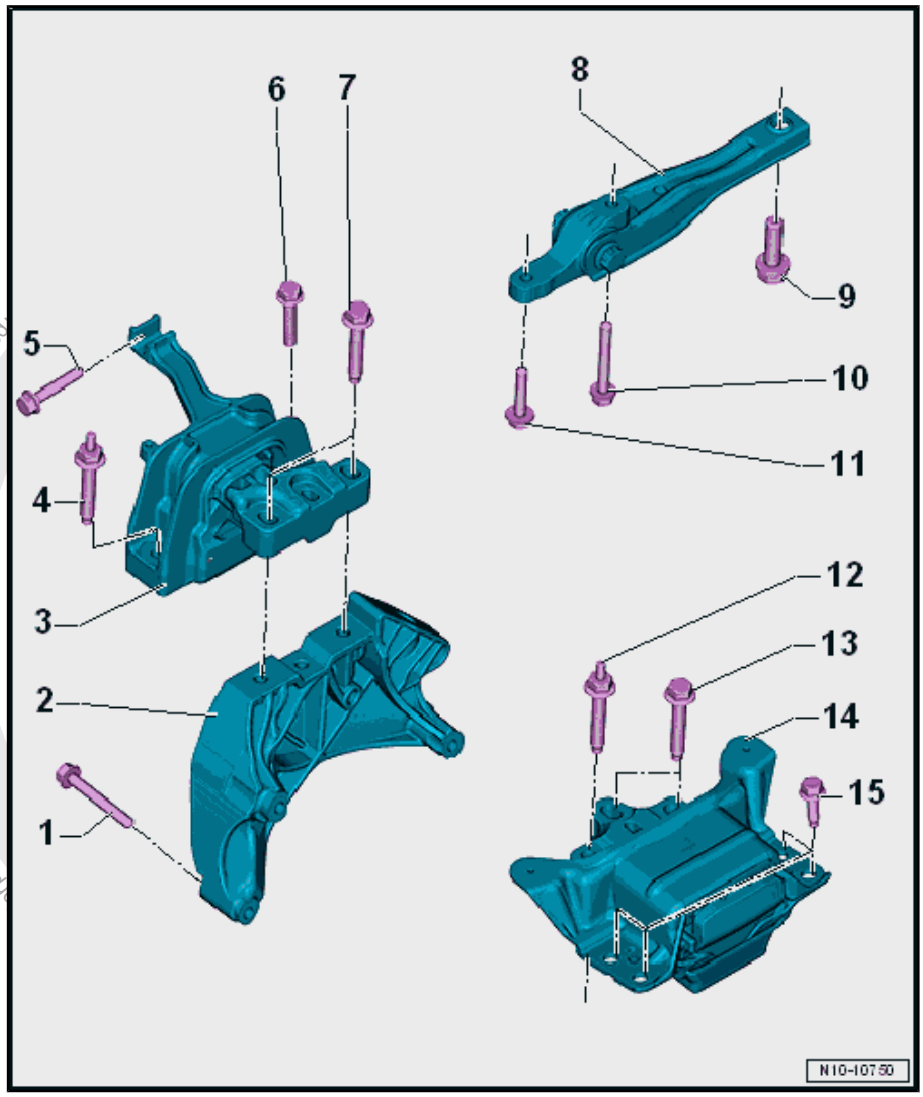

1 - Bolt

- ❑ Replace after removing
- ❑ Tightening specification and sequence. Refer to ⇒ Fig. ““Engine Support - Tightening Specification and Sequence”“ , page 56 .

2 - Engine Support

- ❑ Removing and installing. Refer to ⇒ “1.6 Engine Support, Removing and Installing”, page 55 .

3 - Engine Mount

- ❑ With support arm
- ❑ Removing and installing. Refer to ⇒ “2.2 Engine Mount, Removing and Installing”, page 30 .

4 - Bolt

- ❑ 40 Nm + 90° turn
- ❑ Replace after removing

5 - Bolt

- ❑ 20 Nm + 90° turn
- ❑ Replace after removing

6 - Bolt

- ❑ 40 Nm + 90° turn
- ❑ Replace after removing

7 - Bolt

- ❑ 60 Nm +90° turn
- ❑ Replace after removing

8 - Pendulum Support

- ❑ Removing and installing. Refer to ⇒ “2.4 Pendulum Support, Removing and Installing”, page 33 .

9 - Bolt

- ❑ Replace after removing

Private or commercial purposes, in part or in whole, is not permitted

- ❑ Tightening specification and sequence. Refer to ⇒ “2.4 Pendulum Support, Removing and Installing”, page 33 .

10 - Bolt

- ❑ Replace after removing
- ❑ Tightening specification and sequence. Refer to ⇒ “2.4 Pendulum Support, Removing and Installing”, page 33 .

11 - Bolt

- ❑ Replace after removing
- ❑ Tightening specification and sequence. Refer to ⇒ “2.4 Pendulum Support, Removing and Installing”, page 33 .

12 - Bolt

- ❑ 60 Nm + 90° turn
- ❑ Replace after removing

13 - Bolt

- ❑ 60 Nm + 90° turn
- ❑ Replace after removing

14 - Transmission Mount

- ❑ With support arm
- ❑ Removing and installing. Refer to ⇒ “2.3 Transmission Mount, Removing and Installing”, page 31 .

15 - Bolt

- ❑ 50 Nm + 90° turn
- ❑ Replace after removing

ted by copyright. Copying for private or commercial purposes, in part or in whole, is not permitted unless authorised by Volkswagen AG. Volkswagen AG does not guarantee or accept any liability with respect to the correctness of information in this docume

2.2 Engine Mount, Removing and Installing

Caution

This procedure contains mandatory replaceable parts. Refer to component overview prior to starting procedure.

Mandatory Replacement Parts

- ♦ Bolts - Engine Mount

– Disconnect the connector -1-.

– Free up the hoses -2-.

– Release the retainers with a screwdriver in direction of -arrow- and move the coolant expansion tank to the side.

– Support the engine in its installed position. Refer to ⇒ “2.5 Engine, Supporting in Installed Position”, page 33 .

– Slightly pretension the engine/transmission assembly with the spindle, do not lift.

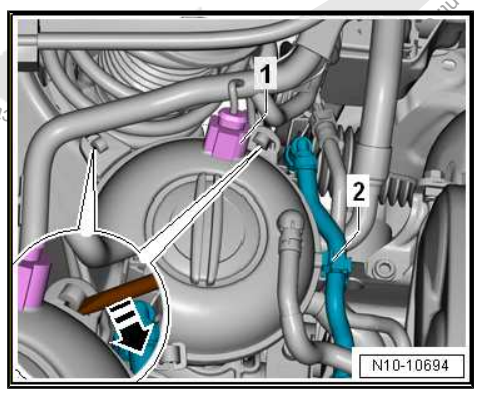

– Remove the bolts -arrows- and engine mount -1-.

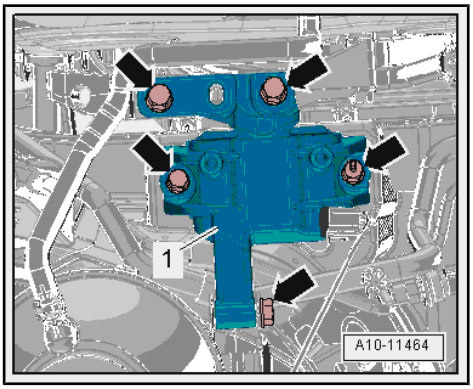

Installing

Install in reverse order of removal. Note the following:

– Check the adjustment of the assembly mounts. Refer to ⇒ "2.7 Subframe Mount, Checking Adjustment", page 37 .

Tightening Specifications

♦ Refer to ⇒ "2.1 Overview - Subframe Mount", page 29

2.3 Transmission Mount, Removing and Installing

Removing

Caution

This procedure contains mandatory replaceable parts. Refer to component overview prior to starting procedure.

Mandatory Replacement Parts

♦ Bolts - Transmission Mount

– Remove the battery tray. Refer to ⇒ Electrical Equipment; Rep. Gr. 27 ; Battery; Battery Tray, Removing and Installing .

– Remove the Engine Control Module - J623- from the bracket. Refer to ⇒ "6.1 Engine Control Module J623 , Removing and Installing", page 321 .

– Remove the bolts -arrows- and remove the bracket -1-.

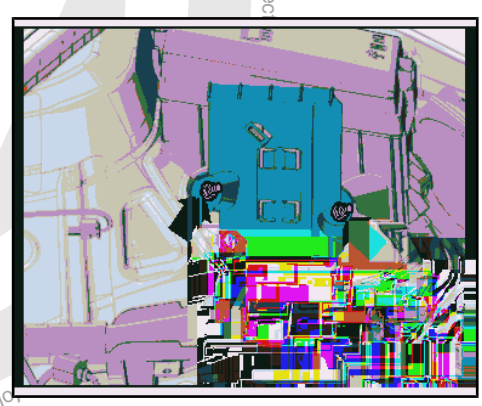

Note

Depending on the version different brackets are installed.

Protected by copyright. Copying for private or commercial purposes, in part or in whole, is not permitted unless authorised by Volkswagen AG. Volkswagen AG does not guarantee or accept any liability with respect to the correctness of information in this document. Copyright by Volkswagen AG.

– Unclip the wiring guide -1- upward and move it slightly to the side in direction of -arrows-.

– Support the engine in its installed position. Refer to ⇒ “2.5 Engine, Supporting in Installed Position”, page 33 .

– Remove the bolts -2-, then the bolts -arrows- and remove the transmission mount -1-.

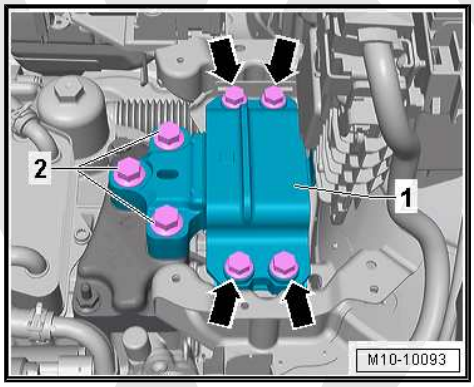

Installing

Install in reverse order of removal. Note the following:

Note

- *Replace the bolts which have been tightened to torque.*
- *The transmission support and the transmission mount support arm must be absolutely parallel to each other before installing bolts. Push the transmission up using a floor jack if necessary.*

– Secure the transmission support to the longitudinal member.

– Pull the transmission up using the spindle on the engine support bridge until the transmission support touches the transmission mount support arm.

– Install bolts by hand pay attention while doing so that the bolts are not installed crooked.

– Check the adjustment of the assembly mounts. Refer to ⇒ “2.7 Subframe Mount, Checking Adjustment”, page 37 .

– When the bolts are tightened to the tightening specification, remove the Engine Support Bridge - 10-222A- from the engine.

Tightening Specifications

- Refer to ⇒ “2.1 Overview - Subframe Mount”, page 29
- Refer to ⇒ Electrical Equipment; Rep. Gr. 27 ; Battery; Overview - Battery .

Protected by copyright. Copyright by privacy or commercial purposes, in part or in whole, is not permitted unless authorised by Volkswagen AG. Copyright by Volkswagen AG. Accept any liability with respect to the correctness of information in this document.

2.4 Pendulum Support, Removing and Installing

Removing

> **Caution**
>
> *This procedure contains mandatory replaceable parts. Refer to component overview prior to starting procedure.*

Mandatory Replacement Parts

- ♦ Bolts - Pendulum Support

– Remove the noise insulation. Refer to ⇒ Body Exterior; Rep. Gr. 66 ; Noise Insulation; Overview - Noise Insulation .

– Remove the bolts -1, 2 and 3- and remove pendulum support.

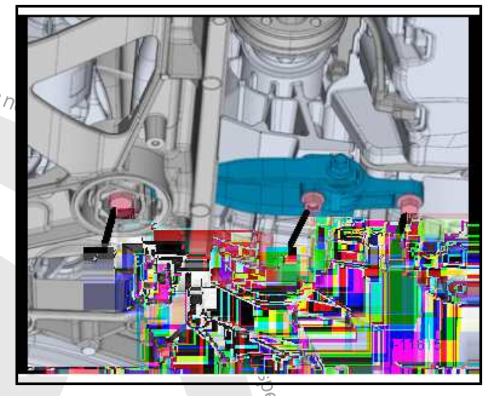

Installing

Install in reverse order of removal. Note the following:

Tightening Specifications

Step	Bolts	Tightening Specification/Additional Turn
1.	-2 and 3-	50 Nm
2.	-1-	130 Nm
3.	-1 to 3-	Turn an additional 90°

- ♦ Refer to ⇒ Body Exterior; Rep. Gr. 66 ; Noise Insulation; Overview - Noise Insulation .

2.5 Engine, Supporting in Installed Position

Special tools and workshop equipment required

- ♦ Engine Support Bridge - 10-222A-
- ♦ Engine Support Bridge - Engine Support 18 - 10-222A/18-
- ♦ Engine Support Bridge - Engine Support 29 - 10-222A/29-
- ♦ Engine Support - Basic Set Square Pipe - T40091/1- and Engine Support - Movable Joint - T40091/3- from the Engine Support - Basic Set - T40091-
- ♦ Engine Support Brackets - T40093/3- and Engine Support Brackets - T40091/3-6- from the Engine Support - Supplement Kit - T40093A-
- ♦ Engine Support Bridge - Special Hook (2 pc.) - 10-222A/20-
- ♦ Engine/Gearbox Support Shackle (2 pc.) - 10-222A/12-

Tool Development

– If the adapter for Engine Support Bridge - Engine Support 4 - 10-222A/4- does not have the indicated holes -arrow- shown they must be added.

• Dimension -a- = 225 mm.

• Hole diameter = 12.5 mm

– Remove the engine cover. Refer to ⇒ “3.1 Engine Cover, Removing and Installing”, page 38 .

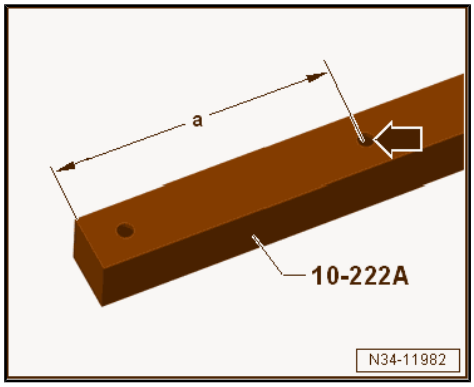

– Unlock the retaining tab in direction of -arrow-, remove the left engine cover mount -1-.

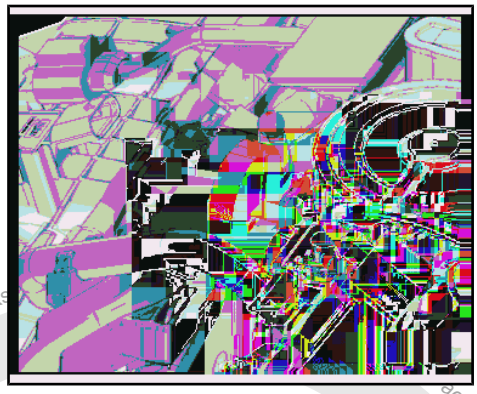

– Unclip the right mount -1- for the engine cover from the bracket -2-.

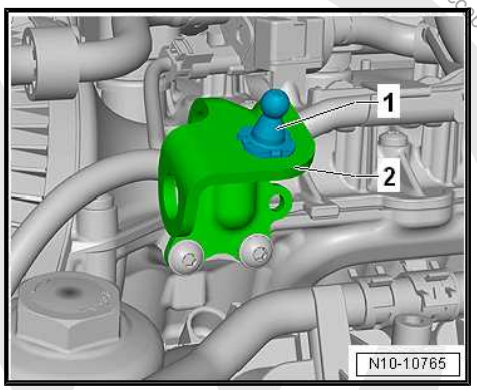

– Place the Engine Support Bridge - Engine Support 29 - 10-222A/29- on both sides of the vehicle between the fender bolting edge and the fender bolting plate underneath.

♦ Installed position:

“L” = -1- Adapter is Installed on the “Right” Side of the Vehicle (Adapter Lock in the Opening on the Fender)

“R” (Not Illustrated), Adapter is Installed on the “Left” Side of the Vehicle.

The arrow -2- always points in direction of travel.

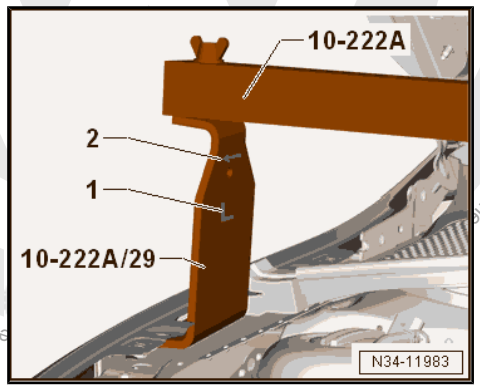

Protected by copyright. Copying for private or commercial purposes, in part or in whole, is not permitted unless authorised by Volkswagen. We accept any liability with respect to the correctness of information in this document.

– Push the Engine Support Bridge - Engine Support 18 - 10-222A/18- and two Engine Support - Movable Joint - T40091/3- on the Engine Support Bridge - 10-222A- .

– Tighten the Engine Support Bridge - 10-222A- on the Engine Support Bridge - Engine Support 29 - 10-222A/29- .

– Remove the windshield washer system washer fluid reservoir filler tube. Refer to ⇒ Electrical Equipment; Rep. Gr. 92 ; Windshield Washer System; Washer Fluid Reservoir, Removing and Installing .

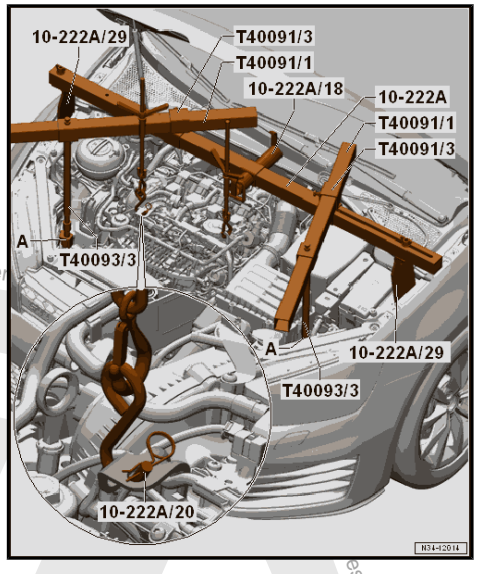

– If equipped remove the wire from the front area of the base of the longitudinal member -arrow-. Do not disconnect the wiring harness.

– Place the Engine Support Brackets - T40093/3-6- on both sides of the longitudinal member the right longitudinal member is shown here).

– If necessary carefully unclip the Air Conditioning (A/C) system pipe in the front area. Do not disconnect the wiring harness. Refer to ⇒ Heating, Ventilation and Air Conditioning; Rep. Gr. 87 ; Refrigerant Circuit; System Overview - Refrigerant Circuit .

• Lock the Engine Support Brackets - T40093/3-6- with the pin -A- behind the edge of the longitudinal member -arrow-.

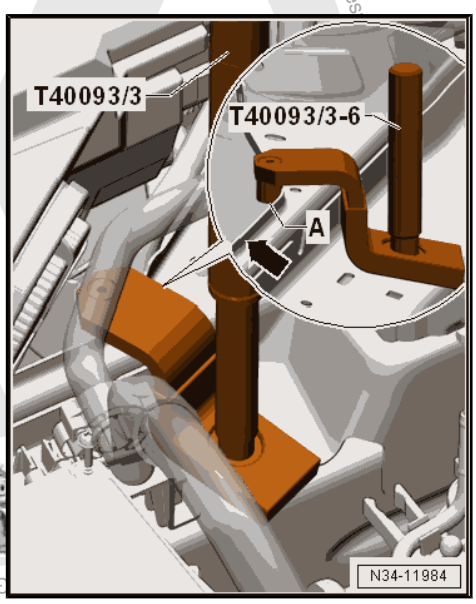

– Install the Engine Support Bracket - T40093/3- .

– Connect the Engine Support Brackets - T40093/3- over the Engine Support - Basic Set - Square Pipe - T40091/1- with the Engine Support Bridge - 10-222A- and tension.

– Engage the Brackets in the engine lifting eye over the Engine Support Bridge - Special Hook (2 pc.) - 10-222A/20- and if necessary over the Engine/Gearbox Support Shackle (2 pc.) - 10-222A/12- .

– Lightly tension the engine/transmission assembly and Extractor via the Brackets .

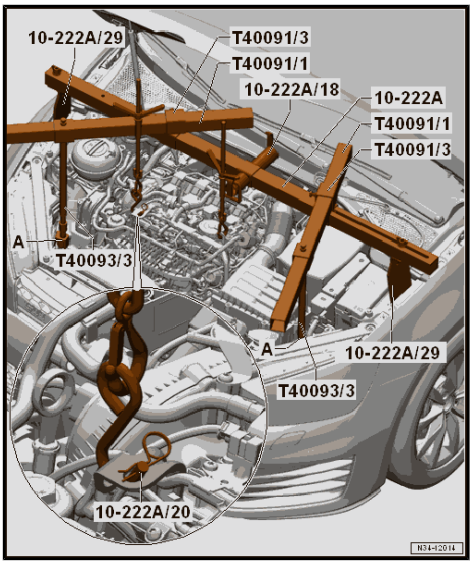

Protected by copyright. Copying for private or commercial purposes, in part or in whole, is not permitted unless authorised by Volkswagen AG. Volkswagen

2.6 Subframe Mount, Adjusting

Caution

This procedure contains mandatory replaceable parts. Refer to component overview prior to starting procedure.

Mandatory Replacement Parts

- Bolts - Engine Mount

Procedure

– Remove the battery tray. Refer to ⇒ Electrical Equipment; Rep. Gr. 27 ; Battery; Battery Tray, Removing and Installing .

– Support the engine in its installed position. Refer to ⇒ "2.5 Engine, Supporting in Installed Position", page 33 .

– Remove and replace the bolts -arrows- for the engine mount one after the other (if this was not already done when the engine was installed).

– Install the bolts loosely.

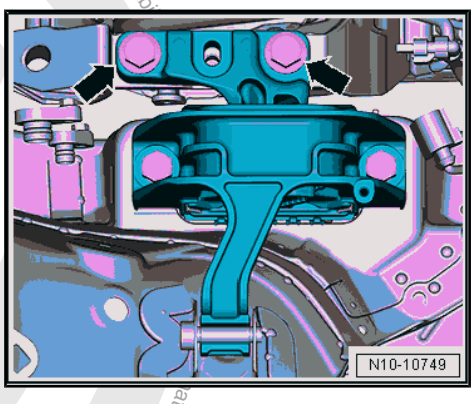

– Slide engine/transmission assembly with a pry bar, until the following dimensions are set:

- The clearance between the engine support -2- and the engine mount -1- must be -a- = 10 mm.
- The casting edge on the engine support must be parallel to the support arm.
- Dimension -b- = Dimension -b-.

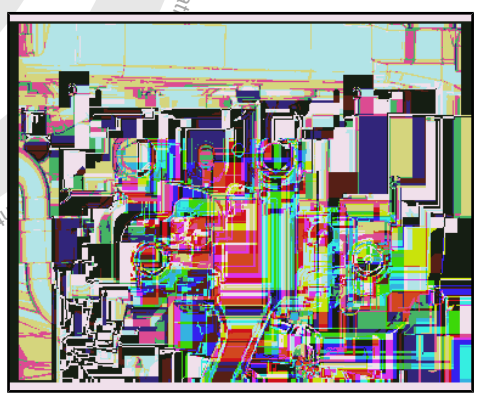

Note

Distance -a- can also be checked using a suitable round stock.

– Tighten the bolts on the engine mount.

– Remove the replace the bolts -arrows- for the transmission mount one after the other on the (if this was not already done when the engine was installed).

– Install the bolts loosely.

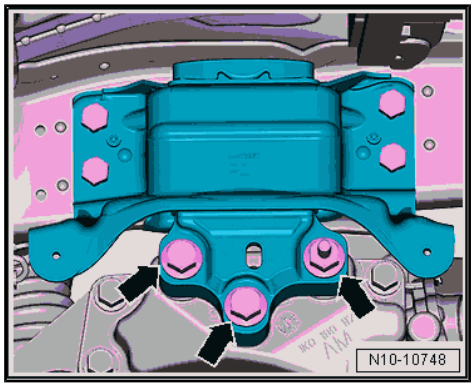

Protected by copyright. Copying for private or commercial purposes, in part or in whole, is not permitted unless authorised by Volkswagen AG. Volkswagen AG does not guarantee or accept any liability with respect to the correctness of information in this document. Copyright by Volkswagen AG.

– Pay attention that on the transmission side the support arm and the transmission mount remain parallel.

• Dimension -x- = dimension -x-.

– Tighten the transmission support bolts.

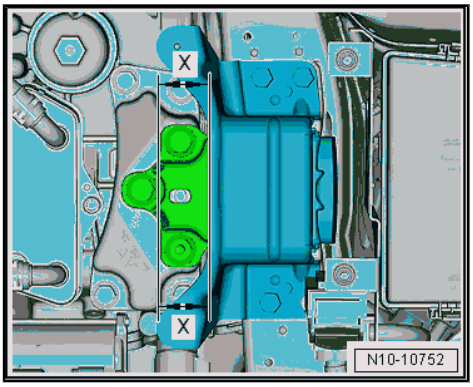

Tightening Specifications

♦ Refer to ⇒ “2.1 Overview - Subframe Mount”, page 29 .

♦ Refer to ⇒ Electrical Equipment; Rep. Gr. 27 ; Battery; Overview - Battery .

2.7 Subframe Mount, Checking Adjustment

Procedure

The following dimensions must be attained:

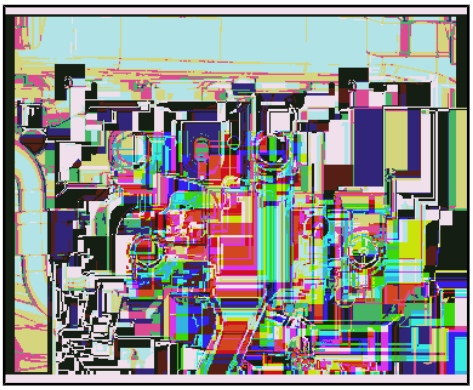

• The clearance between the engine support -2- and the engine mount -1- must be -a- = 10 mm.

• The casting edge on the engine support must be parallel to the support arm

• Dimension -b- = Dimension -b-.

Note

Distance -a- can also be checked using a suitable round stock.

– The distance measured is too small or too large, adjust the subframe. Refer to ⇒ “2.6 Subframe Mount, Adjusting”, page 36 .

Protected by copyright. Copying for private or commercial purposes, in part or in whole, is not permitted unless authorised by Volkswagen AG. Volkswagen AG does not guarantee or accept any liability with respect to the correctness of information in this document. Copyright by Volkswagen AG.

3 Engine Cover

⇒ “3.1 Engine Cover, Removing and Installing”, page 38 .

3.1 Engine Cover, Removing and Installing

Removing

– Carefully pull the engine cover off the bolts one after the other in direction of -arrows-. Do not remove the engine cover on one side or in a jerking manner.

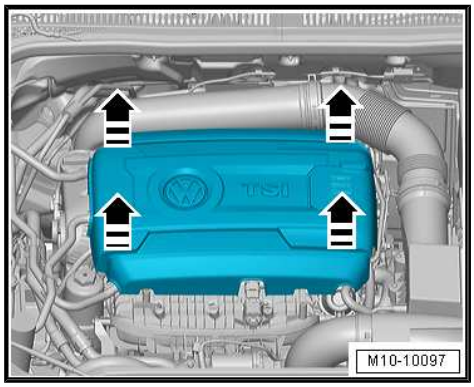

Installing

– In order to prevent causing damage, do not hit the engine cover with your fist or tool.

– Position the engine cover while paying attention to the oil filler tube and oil dipstick.

– Press the engine cover into the rubber grommets on the left side first, then into the ones on the right side.

Protected by copyright. Copying for private or commercial purposes, in part or in whole, is not permitted unless authorised by Volkswagen AG. Volkswagen AG does not guarantee or accept any liability with respect to the correctness of information in this document. Copyright by Volkswagen AG.

4 Special Tools

- Engine Sling - 2024A-
- Shop Crane - VAS6100-
- Engine And Transmission Holder - VAS6095-

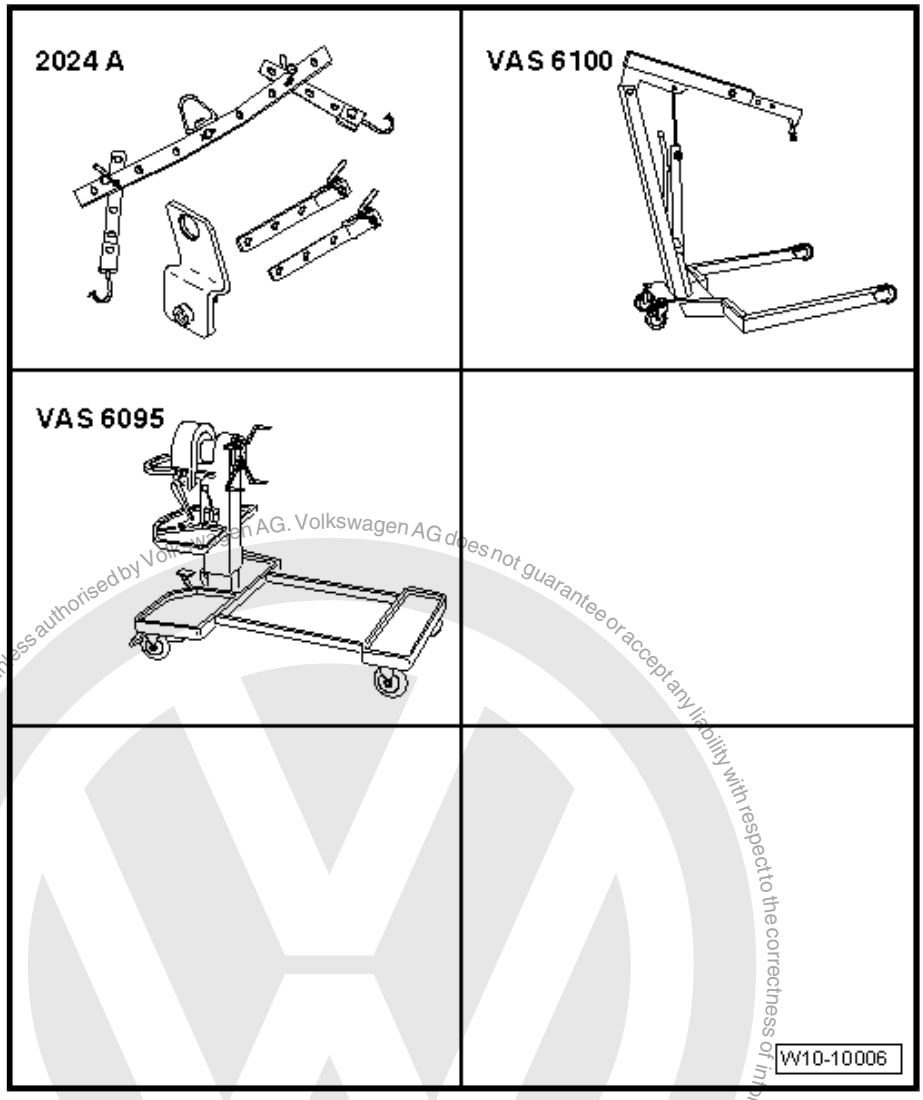

Protected by copyright. Copying for private or commercial purposes, in part or in whole, is not permitted unless authorised by Volkswagen AG. Volkswagen AG does not guarantee or accept any liability with respect to the correctness of information in this document. Copyright by Volkswagen AG.

- Engine Support Bridge - 10-222A-
- Engine Support Bridge - Engine Support 18 - 10-222A/18-
- Engine Support Bridge - Engine Support 29 - 10-222A/29-
- Engine Support - Basic Set Square Pipe - T40091/1- and Engine Support - Basic Set Adaptor -T40091/3- from the Engine Support - Basic Set - T40091-
- Engine Support Brackets - T40093/3- and Engine Support Brackets -T40091/3-6- from the Engine Support - Supplement Kit - T40093A-

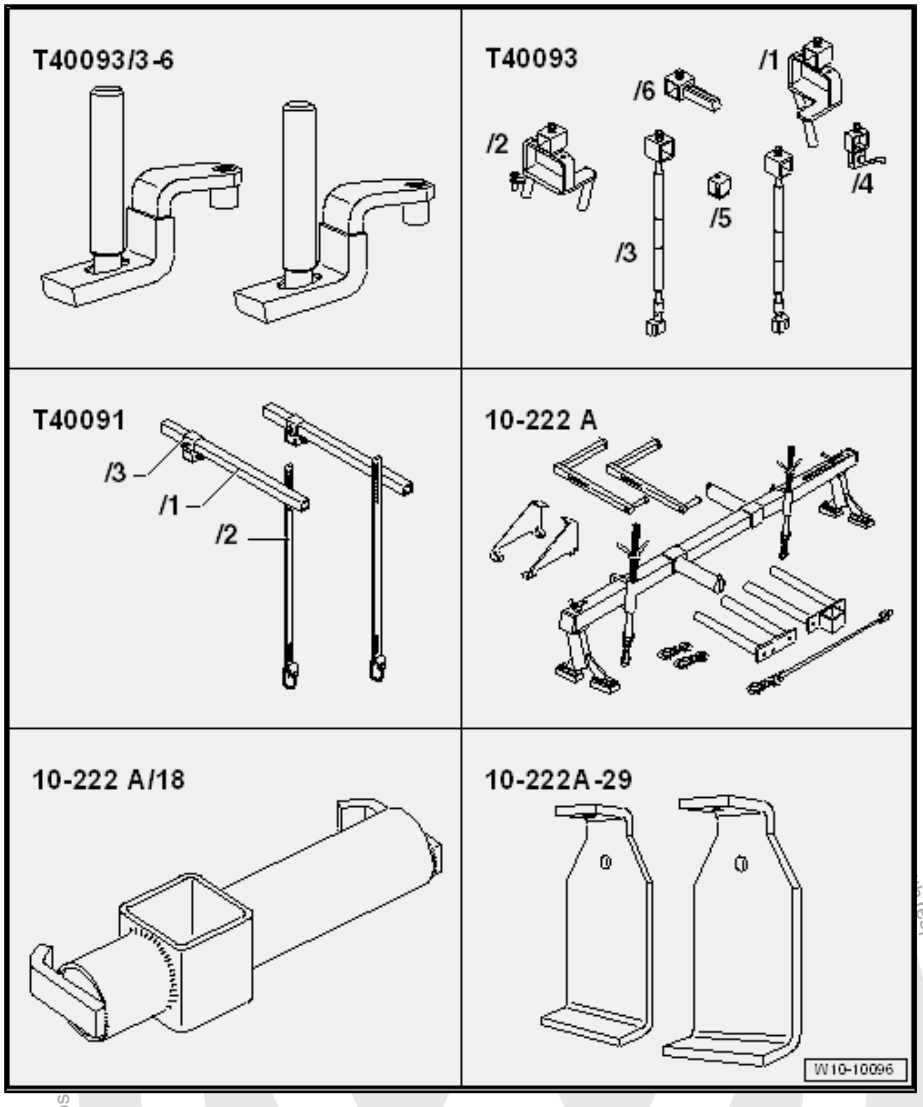

- Engine/Gearbox Jack - Engine Support - T10359A-

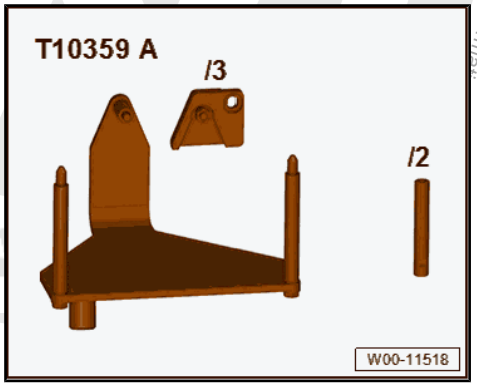

- Engine/Gearbox Jack - Pin - T10359/2-
- Engine/Gearbox Jack - Adapter - T10359/3-

Protected by copyright. Copying for private or commercial purposes, in respect to the correctness of information

Protected by copyright. Copying for private or commercial purposes, in part or in whole, is not permitted unless authorised by Volkswagen AG. Volkswagen AG does

- Transmission Lift Hook - T40013-

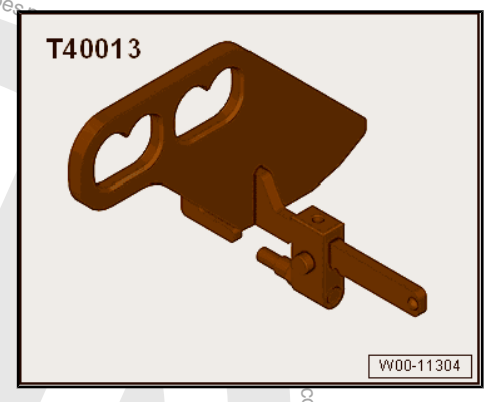

- Shop Crane - VAS6100-

- Engine Bung Set - VAS6122-

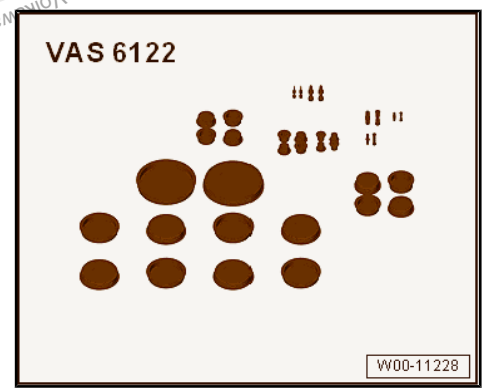

- Shop Crane - Drip Tray - VAS6208-

- Engine and Gearbox Jack - VAS6931-

- Engine Support Bridge - Additional Hooks (2 pc.) - 10-222A/2-

- Engine Support Bridge - Additional Hooks (2 pc.) - 10-222A/20-

- Pry Lever - 80-200-

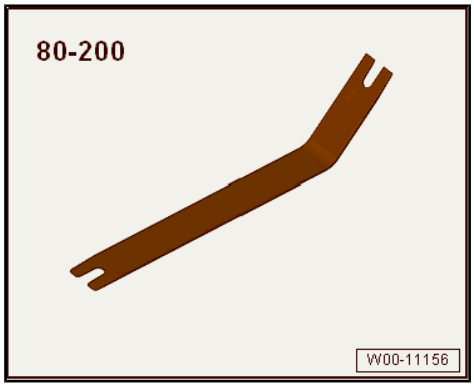

Protected by copyright. Copying for private or commercial purposes, in part or in whole, is not permitted unless authorised by Volkswagen AG. Volkswagen AG does not

- Engine Sling - Engine Bracket - 2024A/1- from Engine Sling - 2024A-

- Hose Clamps - Up To 25mm - 3094-

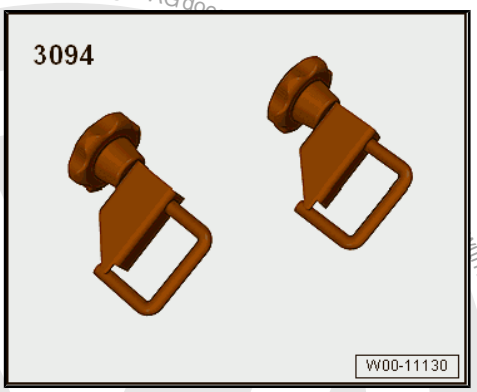

- Transmission Support - 3282-

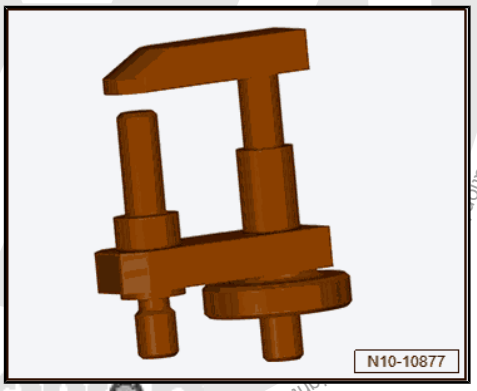

Protected by copyright. Copying for private or commercial purposes, in part or in whole, is not permitted unless authorised by Volkswagen AG. Volkswagen AG doe
with respect to the correctness of informatio
ght by Volkswagen AG.

13 – Crankshaft, Cylinder Block

1 Cylinder Block, Belt Pulley Side

⇒ “1.1 Overview - Cylinder Block, Belt Pulley Side”, page 44

⇒ “1.2 Ribbed Belt, Removing and Installing”, page 46

⇒ “1.3 Ribbed Belt Tensioner, Removing and Installing”, page 47

⇒ “1.4 Vibration Damper, Removing and Installing”, page 47

⇒ “1.5 Auxiliary Components Bracket, Removing and Installing”, page 53

⇒ “1.6 Engine Support, Removing and Installing”, page 55

1.1 Overview - Cylinder Block, Belt Pulley Side

Protected by copyright. Copying for private or commercial purposes, in part or in whole, is not permitted unless authorised by Volkswagen AG. Volkswagen AG does not

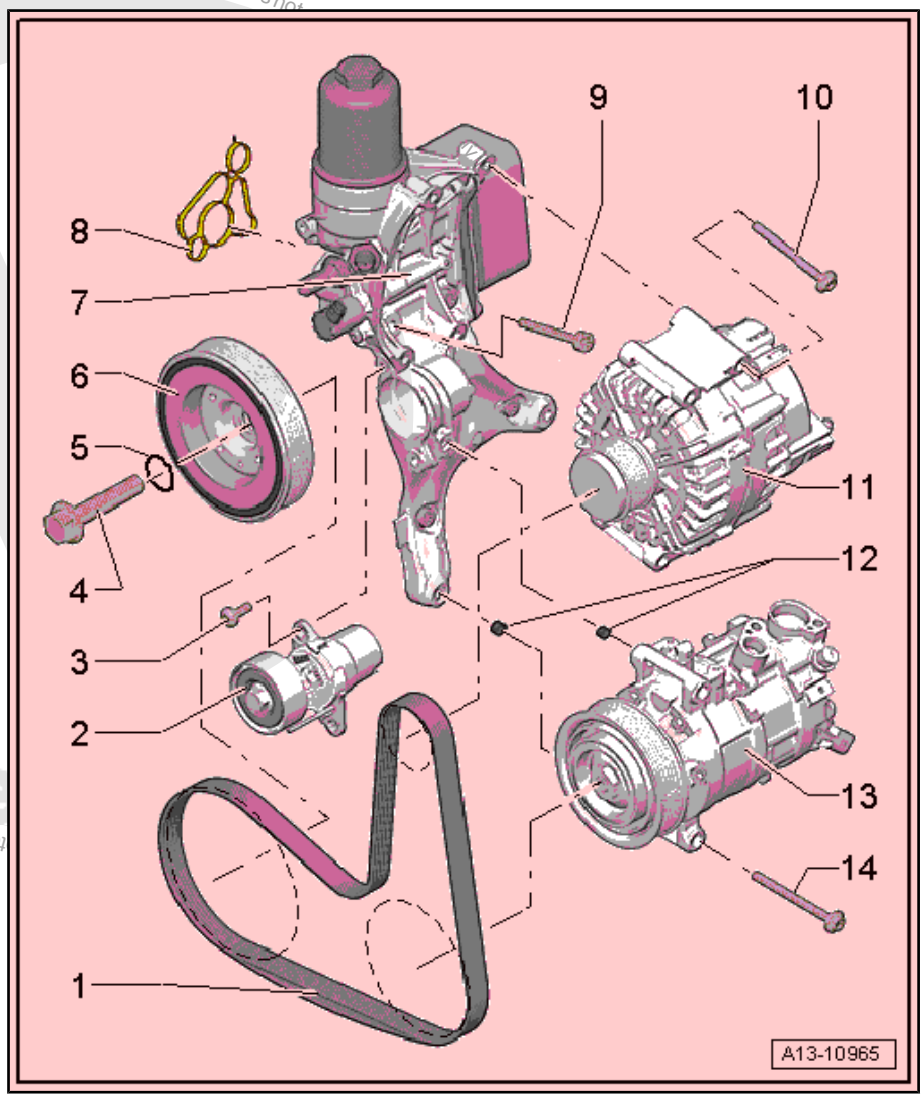

1 - Ribbed Belt

- ❑ Check for wear
- ❑ Do not kink
- ❑ Ribbed belt routing. Refer to ⇒ Fig. ““Ribbed Belt Routing”“ , page 46
- ❑ Removing and installing. Refer to ⇒ “1.2 Ribbed Belt, Removing and Installing”, page 46 .
- ❑ When installing, make sure it is seated correctly on the pulleys

2 - Ribbed Belt Tensioning Damper

- ❑ To release tension on ribbed belt, pivot using a wrench.
- ❑ Secure using Locking Pin - T10060A-
- ❑ Removing and installing. Refer to ⇒ “1.3 Ribbed Belt Tensioner, Removing and Installing”, page 47 .

3 - Bolt

- ❑ 8 Nm + 45° turn
- ❑ Replace after removing

4 - Bolt

- ❑ 150 Nm + 90° turn
- ❑ Replace after removing
- ❑ Use the Counterhold - Pulley - T10475- to loosen and tighten
- ❑ Removing and installing. Refer to ⇒ “1.4 Vibration Damper, Removing and Installing”, page 47 .

5 - O-Ring

- ❑ Not a replacement part; supplied with the bolt

6 - Vibration Damper

- ❑ With ribbed belt pulley
- ❑ Removing and installing. Refer to ⇒ “1.4 Vibration Damper, Removing and Installing”, page 47 .
- ❑ Vibration Damper Sealing Ring, Replacing. Refer to ⇒ “2.3 Vibration Damper Sealing Ring, Replacing”, page 112 .

7 - Auxiliary Components Bracket

- ❑ With oil filter and engine oil cooler
- ❑ Accessory assembly bracket, removing and installing. Refer to ⇒ “1.5 Auxiliary Components Bracket, Removing and Installing”, page 53 .
- ❑ Removing and installing the engine oil cooler. Refer to ⇒ “2.2 Engine Oil Cooler, Removing and Installing”, page 192 .

8 - Seal

- ❑ Replace after removing

9 - Bolt

- ❑ Replace after removing
- ❑ Tightening specification and sequence. Refer to ⇒ Fig. ““Accessory Assembly Bracket - Tightening Specifications and Tightening Sequence”“ , page 45 .

10 - Bolt

- ❑ Tightening specification. Refer to ⇒ Electrical Equipment; Rep. Gr. 27 ; Generator; Overview - Generator .

11 - Generator

- ❑ Overview. Refer to ⇒ Electrical Equipment; Rep. Gr. 27 ; Generator; Overview - Generator .

12 - Alignment Sleeves

- ❑ For A/C compressor

13 - Air Conditioning (A/C) Compressor

- ❑ Do not remove or disconnect refrigerant lines
- ❑ Assembly overview. Refer to ⇒ Heating, Ventilation and Air Conditioning; Rep. Gr. 87 ; A/C Compressor; Overview - A/C Compressor Power Unit .

14 - Bolt

- ❑ Tightening specifications. Refer to ⇒ Heating, Ventilation and Air Conditioning; Rep. Gr. 87 ; A/C Compressor; Overview - A/C Compressor Power Unit .

Protected by copyright. Copying for private or commercial purposes, in part or in whole, is not permitted unless authorised by Volkswagen AG. Volkswagen AG does not guarantee or accept any liability with respect to the correctness of information in this Volkswagen AG.

Accessory Assembly Bracket - Tightening Specifications and Tightening Sequence

– Mount the accessory assembly bracket and then install the bolt -4- by hand.

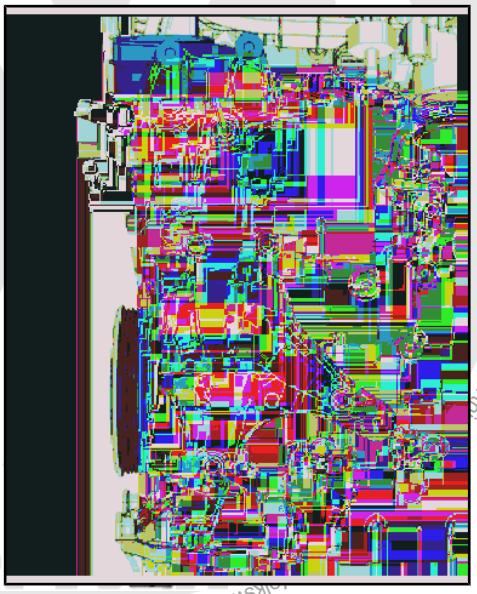

Note

Replace the bolts that were tightened with an additional turn.

– Tighten bolts in 3 stages in -1 to 5- sequence as follows:

Step	Bolts	Tightening Specification
1.	-1 through 5-	Tighten by hand
2.	-1 through 5-	20 Nm
3.	-1 through 5-	Turn an additional 90°.

Ribbed Belt Routing

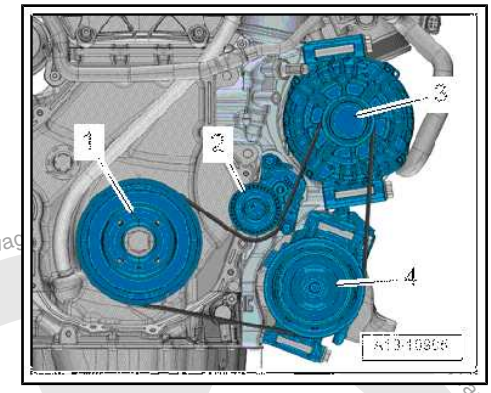

1 - Vibration damper

2 - Ribbed Belt Tensioning Damper

3 - Generator

4 - A/C Compressor

1.2 Ribbed Belt, Removing and Installing

Special tools and workshop equipment required

♦ Locking Pin - T10060A-

Removing

– Remove the noise insulation. Refer to ⇒ Body Exterior; Rep. Gr. 66 ; Noise Insulation; Overview - Noise Insulation .

– Remove the right wheel housing liner front section. Refer to ⇒ Body Exterior; Rep. Gr. 66 ; Wheel Housing Liner; Front Wheel Housing Liner, Removing and Installing .

– If the ribbed belt is to be reinstalled mark the running direction with chalk or a felt-tip pen for reinstallation.

– Secure the tensioning system using Locking Pin - T10060A- .

– Remove the ribbed belt.

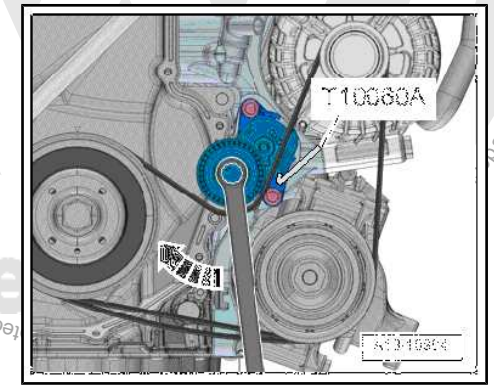

Installing

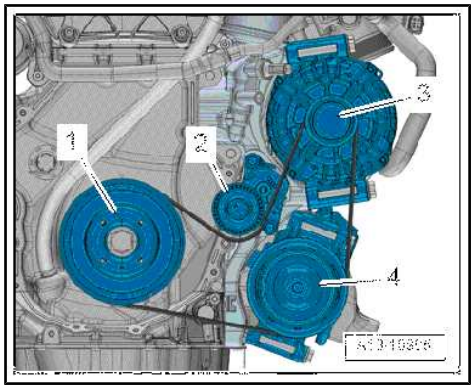

– When a used ribbed belt is installed, pay attention to the running direction.

– Position the ribbed belt as illustrated.

1 - Vibration damper

2 - Ribbed Belt Tensioning Damper

3 - Generator

4 - Air Conditioning (A/C) Compressor

– Turn the tensioning system in the direction of the -arrow- and remove Locking Pin - T10060A- .

– Release the tensioner.

– Check whether ribbed belt is routed correctly.

Protected by copyright. Copying for private or commercial purposes, in part or in whole, is not permitted unless authorised by Volkswagen. Volkswagen does not guarantee or accept any liability with respect to the correctness of information in this document.

– Start engine and check whether ribbed belt runs correctly.

Tightening Specifications

♦ Refer to ⇒ Body Exterior; Rep. Gr. 66 ; Noise Insulation; Overview - Noise Insulation .

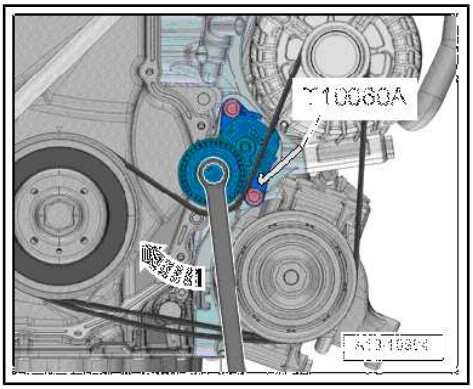

1.3 Ribbed Belt Tensioner, Removing and Installing

Caution

This procedure contains mandatory replaceable parts. Refer to component overview prior to starting procedure.

Mandatory Replacement Parts

♦ Bolts - Ribbed Belt Tensioner

Removing

– Remove the ribbed belt from the tensioner. Refer to ⇒ “1.2 Ribbed Belt, Removing and Installing”, page 46 .

– Remove the bolts -arrows- and pull the ribbed belt tensioning damper -1- off the sub-assembly bracket.

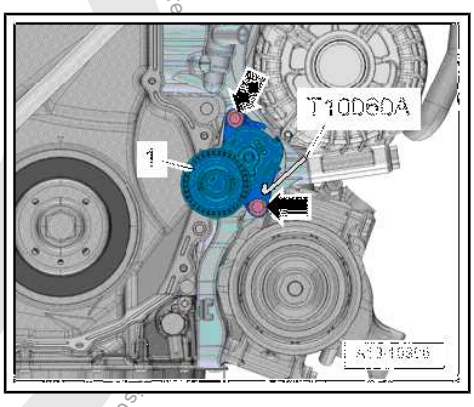

Installing

Install in reverse order of removal. Note the following:

– Install the ribbed belt. Refer to ⇒ “1.2 Ribbed Belt, Removing and Installing”, page 46 .

Tightening Specifications

♦ Refer to ⇒ “1.1 Overview - Cylinder Block, Belt Pulley Side”, page 44 .

1.4 Vibration Damper, Removing and Installing

Special tools and workshop equipment required

♦ Counterhold - Vibration Damper - T10355-

♦ Locking Pin - T10060A-

♦ Assembly Tool - T10531-

Individual components of the Assembly Tool - T10531- :

♦ Counterhold Tool - T10531/1-

♦ Tensioning Pins - T10531/2-

♦ Turning Over Tool - T10531/3-

♦ Collar Nut - T10531/4-

Protected by copyright. Copying for private or commercial purposes, in part or in whole, is not permitted unless authorised by Volkswagen AG. Volkswagen AG does not guarantee or accept any liability with respect to this document. Copyright by Volkswagen AG.

Caution

This procedure contains mandatory replaceable parts. Refer to component overview prior to starting procedure.

Mandatory Replacement Parts

- Bolts - Timing Chain Cover
- Bolt - Vibration Damper
- O-ring - Vibration Damper

The vibration damper bolt -A- connects the vibration damper -1- timing chain connection -2- and the crankshaft -3-. Secure the chain sprocket as described as follows to the crankshaft, before removing the vibration damper.

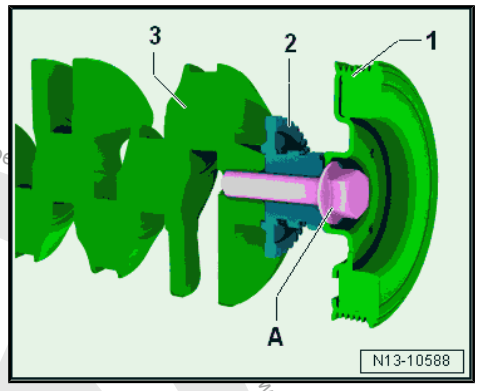

Remove Vibration Damper

– Remove the right wheel housing liner front section. Refer to ⇒ Body Exterior; Rep. Gr. 66 ; Wheel Housing Liner; Front Wheel Housing Liner, Removing and Installing .

– Remove the ribbed belt. Refer to ⇒ “1.2 Ribbed Belt, Removing and Installing”, page 46 .

– Remove the Locking Pin - T10060A- from the ribbed belt tensioner.

– Turn the vibration damper with the Counterhold - Vibration Damper - T10355- to the Top Dead Center (TDC) point -arrow-.

- The notch on the vibration damper must line up with the arrow marking on the timing chain lower cover.
- The marking for the cover is located in the »four-o'clock position«.

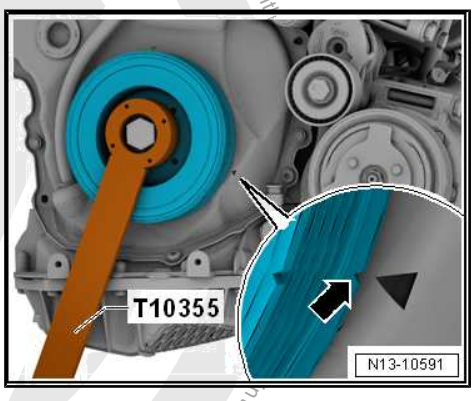

– Loosen the vibration damper bolt approximately $^1/_2$ turn, to do this use the Counterhold - Vibration Damper - T10355- .

– If the vibration damper was turned, correct to TDC.

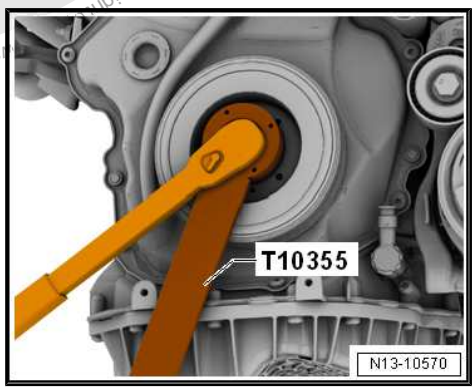

Copyright. Copyright by Volkswagen AG. Volkswagen AG does not permit third parties to use this document or parts thereof for commercial purposes or make it available to third parties without its consent. Copyright by Volkswagen AG. Volkswagen AG does not permitted unless authorised by Volkswagen AG.

– Remove the bolts -arrows- for the timing chain cover. The bolts must be replaced.

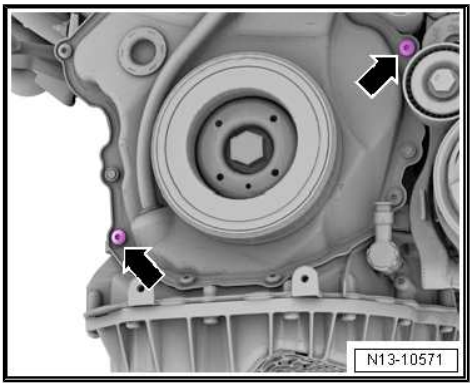

– Place the Counterhold Tool - T10531/1- as shown on the vibration damper and tighten hand-tight using the knurled bolt -arrows-.

– Remove the vibration damper bolt completely.

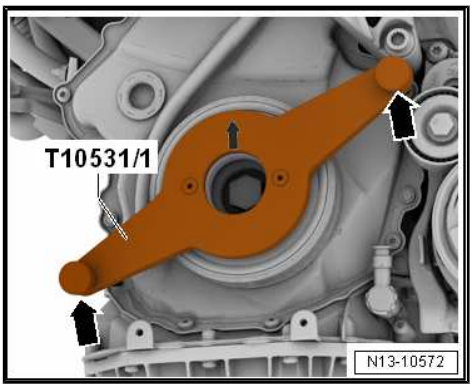

– Check if the Assembly Tool - Turning Over Tool -A- can be easily pushed over the clamping piece -B-. If necessary turn the adjusting bolt -arrow-.

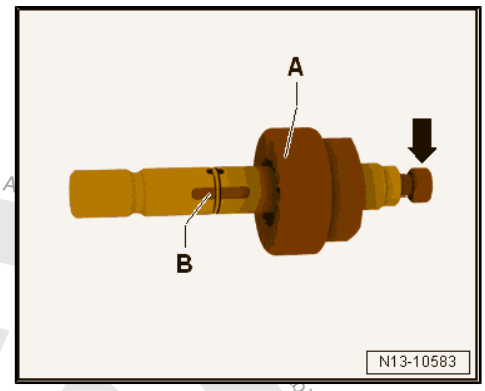

Note

Do not turn the tensioning bolt further, otherwise the Tensioning Pins - T10531/2- becomes jammed when installing the crankshaft

– Install the Tensioning Pins - T10531/2- in the crankshaft and with a 12 mm open end wrench -A- tighten hand-tight.

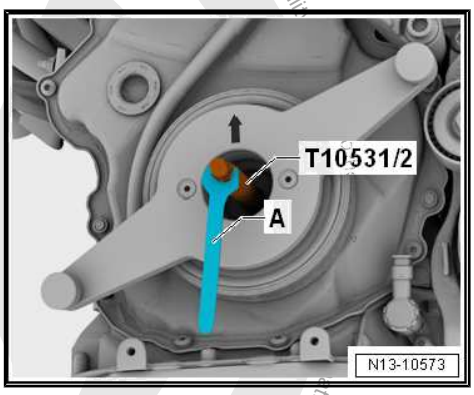

Protected by copyright. Copying for private or commercial purposes, in part or in whole, is not permitted unless authorised by Volkswagen AG. Volkswagen AG. Copyright by Volkswagen AG.

Protected by copyright. Copying for private or commercial purposes, in part or in whole, is not permitted unless authorised by Volkswagen AG. Volkswagen AG does not guarantee or accept any liability with respect to the correctness of information in this

– Tighten the adjusting bolt -A- hand-tight, to secure the chain sprocket to the crankshaft.

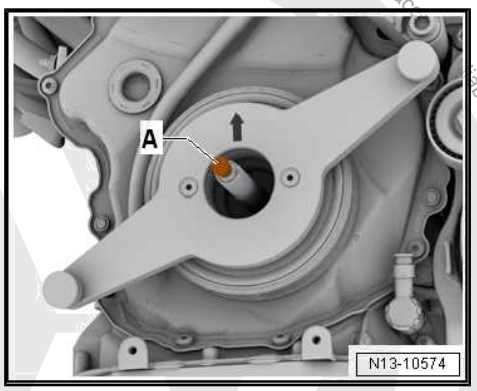

– Remove the knurled bolt -arrows-. Remove the Counterhold Tool - T10531/1- and vibration damper -A-.

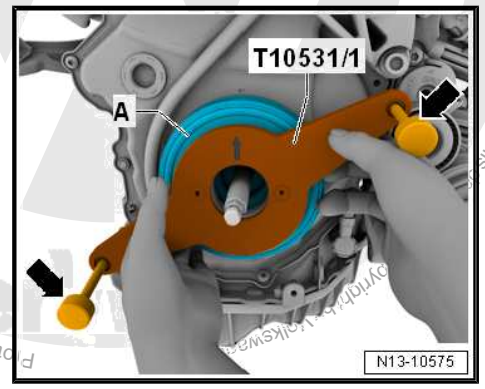

If Crankshaft is Turned without Vibration Damper

– Place the Assembly Tool - Turning Over Tool -A- on the tensioning pins and while doing so pay attention to the chain sprocket tooth contour. The flat side of the top of the tool sits in TDC.

– Tighten the Assembly Tool - Turning Over Tool with the Collar Nut -B-.

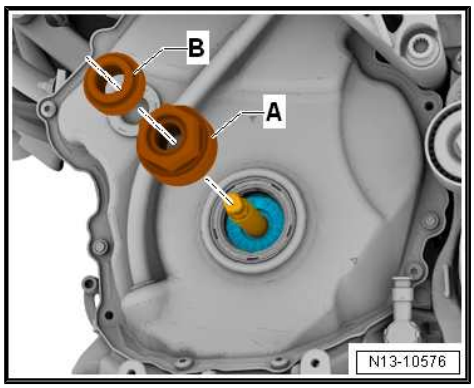

– The crankshaft can now be turned on the hex fitting -arrow-.

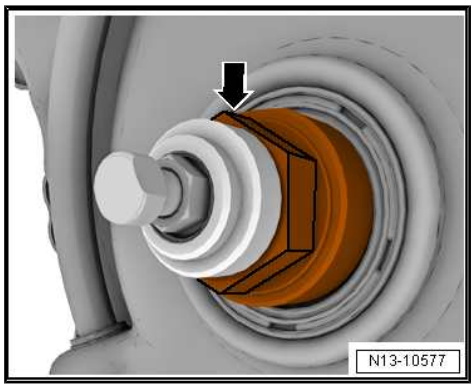

Install Vibration Damper

– If necessary remove the Collar Nut -B- and the Assembly Tool - Turning Over Tool -A- from the tensioning pins.

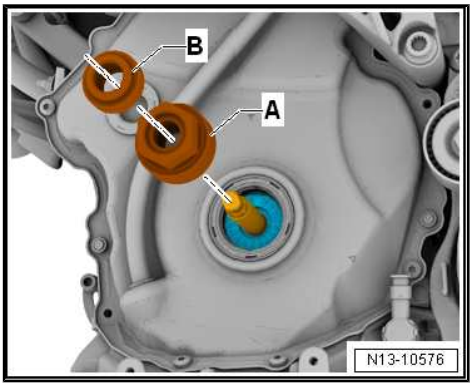

– Secure the vibration damper in TDC, while doing this pay attention to the tooth contour of the chain sprocket -arrow-.

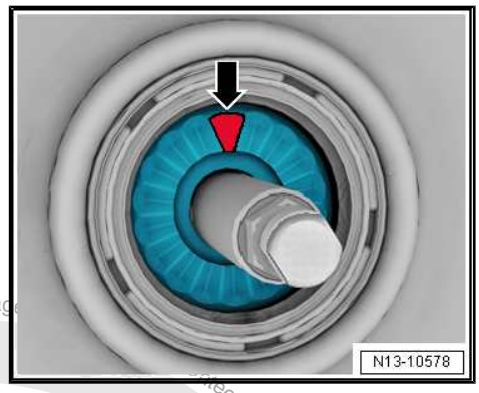

– Place the Assembly Tool - Turning Over Tool -A- on the tensioning pins the at the same time the hex fitting points to the vibration damper.

– Install the Collar Nut -B-, while doing this move the vibration damper slightly back and forth, to check in the vibration damper is correctly in the tooth contour. Tighten the collar nut, until the vibration damper can no longer be turned.

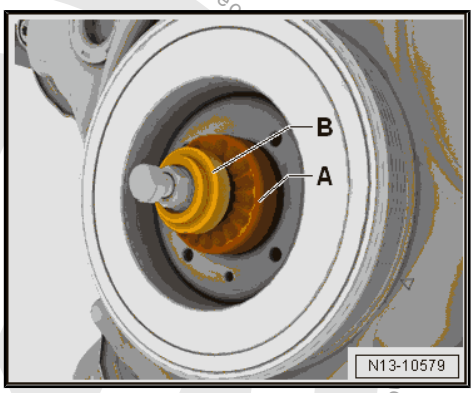

– Place the Counterhold Tool - T10531/1- as shown on the vibration damper and tighten hand-tight using the knurled bolt -arrows-.

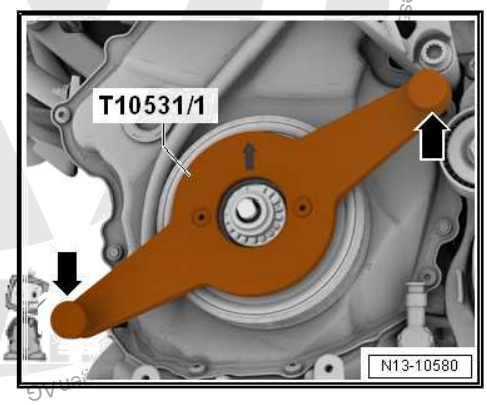

Protected by copyright. Copying for private or commercial purposes, in part or in whole, is not permitted unless authorised by Volkswagen AG. Volkswagen AG

– Remove the Collar Nut -A- and loosen the tensioning bolt -B-.

– Remove the Tensioning Pins and remove with Assembly Tool - Turning Over Tool .

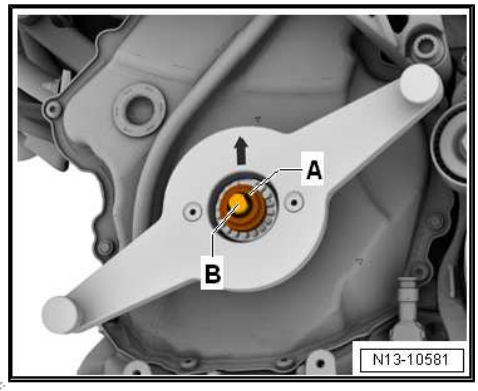

– Install a new vibration damper bolt with oiled O-ring -1- hand-tight.

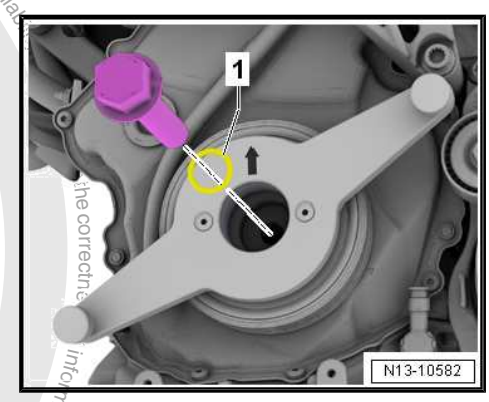

– Remove the knurled bolt -arrows- and remove the Counter-hold Tool - T10531/1- .

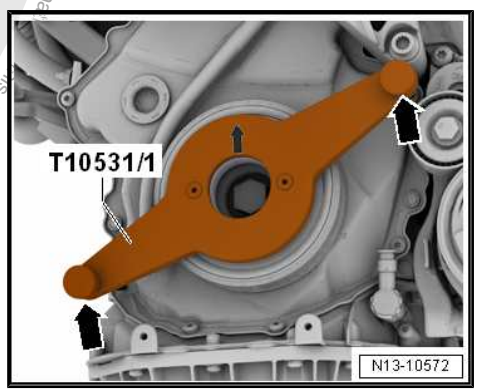

– Tighten vibration damper bolt using the Counterhold - Vibration Damper - T10355- .

– Install new bolts -arrows-.

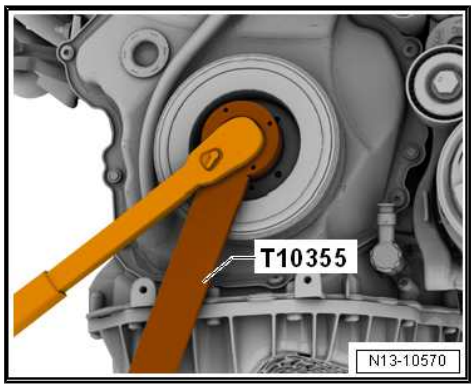

Protected by copyright. Copying for private or commercial purposes, in part or in whole, is not permitted unless authorised by Volkswagen AG. Volkswagen AG does not guarantee or accept any liability with respect to the correctness of information in this document. Copyright by Volkswagen AG.

Assemble in reverse order of disassembly.

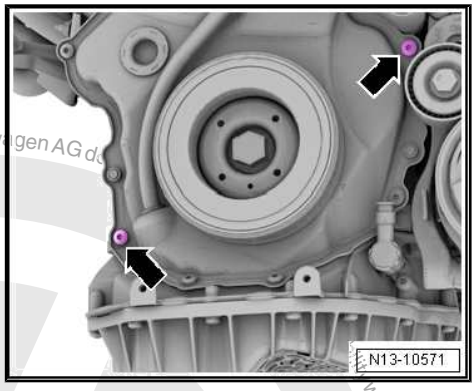

Tightening Specifications

- Refer to
  ⇒ “1.1 Overview - Cylinder Block, Belt Pulley Side”, page 44 .

1.5 Auxiliary Components Bracket, Removing and Installing

Special tools and workshop equipment required

- Shop Crane - Drip Tray - VAS6208-

> **Caution**
>
> *This procedure contains mandatory replaceable parts. Refer to component overview prior to starting procedure.*

Mandatory Replacement Parts

- Bolts - Auxiliary Components Bracket
- O-ring - Engine Oil Cooler
-

Removing

– Drain the coolant. Refer to
  ⇒ “1.3 Coolant, Draining and Filling”, page 217 .

– Remove the generator. Refer to ⇒ Electrical Equipment; Rep. Gr. 27 ; Generator; Generator, Removing and Installing .

> **CAUTION**
>
> **Danger of frostbite from refrigerant.**
>
> **– Do not open the A/C system refrigerant circuit.**

– Disconnect the connector -1- on the A/C Compressor Regulator Valve - N280- .

– Remove the bolts -arrows-.

– Remove the A/C compressor from the bracket with the refrigerant hoses attached and tie up to the right side. Do not bend, twist or stretch the refrigerant lines and hoses.

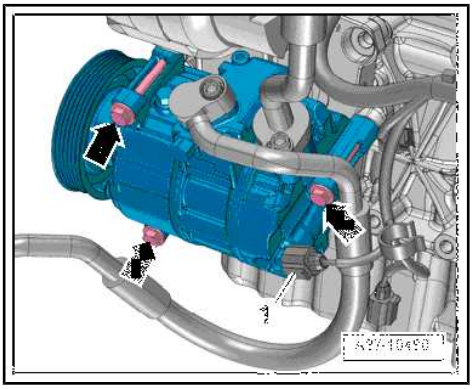

Protected by copyright. Copying for private or commercial purposes, in part or in whole, is not permitted unless authorised by Volkswagen AG. Volkswagen AG does not guarantee or accept any liability with respect to the correctness of information in this document. Copyright by Volkswagen AG.

– Disconnect the connectors:

1 - For Oil Pressure Switch - F22- -2-

3 - For Reduced Oil Pressure Switch - F378- -4-

5 - For Piston Cooling Nozzle Control Valve - N522- -7-

– Remove the oil filter. Refer to ⇒ Maintenance ; Booklet 36.1 ; Procedure Descriptions; Engine Oil, Draining, Replacing Oil Filter, and Filling .

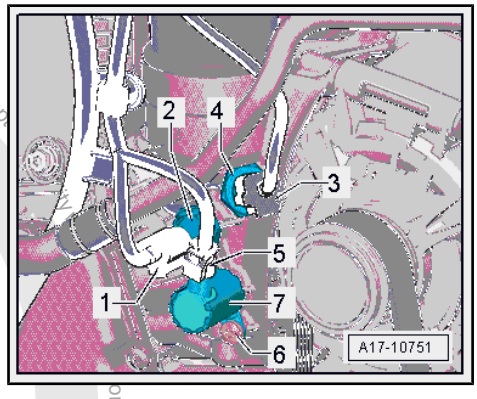

– Remove the bolt -1- for the oil dipstick guide tube.

– Unclip the guide tube from the upper cover for the timing chain in the direction of the -arrow-.

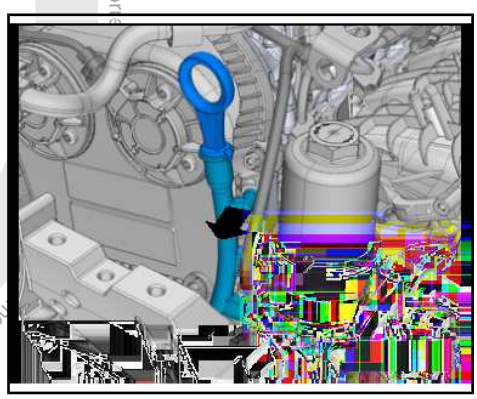

Note

Ignore item -2-.

– Free up the wiring harness.

– Place the Shop Crane - Drip Tray - VAS6208- under engine.

– Remove the bolts -1 to 5-.

– Remove the sub-assembly bracket with the engine oil cooler from the coolant pump housing.

– “Guide out” the accessories bracket between the intake manifold and engine support.

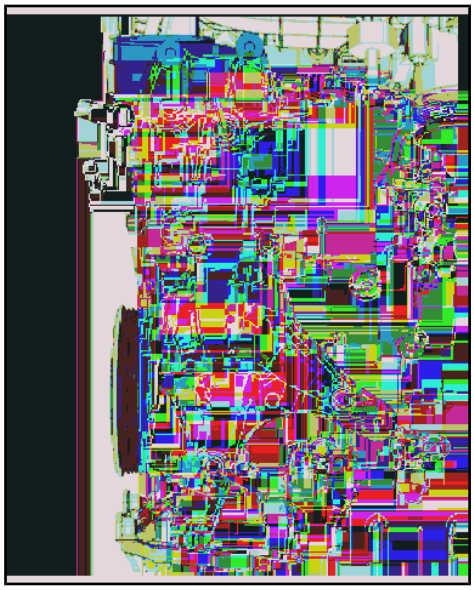

Installing

Install in reverse order of removal. Note the following:

Note

- *Replace the bolts that were tightened with an additional turn.*
- *Replace the O-rings and seals.*

Protected by copyright. Copying for private or commercial purposes in part or in whole is not permitted unless authorised by Volkswagen AG. Volkswagen AG does not guarantee or accept any

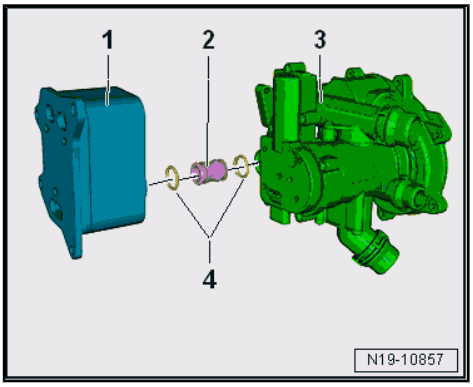

– Coat the new O-rings -4- with coolant.

– Install the connection pieces -2- into the engine oil cooler -1-.

– Press the accessory assembly bracket with the engine oil cooler -1- onto the connection, mount the bolts and tighten. Refer to
⇒ Fig. ""Accessory Assembly Bracket - Tightening Specifications and Tightening Sequence"" , page 45 .

– Install the A/C compressor. Refer to ⇒ Heating, Ventilation and Air Conditioning; Rep. Gr. 87 ; A/C Compressor; Overview - A/C Compressor Power Unit .

– Install the generator. Refer to ⇒ Electrical Equipment; Rep. Gr. 27 ; Generator; Generator, Removing and Installing .

– Install the ribbed belt. Refer to
⇒ "1.2 Ribbed Belt, Removing and Installing", page 46 .

– Fill with coolant. Refer to ⇒ page 218 .

– Install the oil filter and then check the oil level. Refer to ⇒ Maintenance ; Booklet 36.1 ; Procedure Descriptions; Engine Oil, Draining, Replacing Oil Filter, and Filling .

Tightening Specifications

♦ Refer to
⇒ "1.1 Overview - Cylinder Block, Belt Pulley Side", page 44 .

♦ Refer to ⇒ "2.1 Overview - Timing Chain Cover", page 104 .

♦ Install the oil filter and then check the oil level. Refer to ⇒ Maintenance ; Booklet 36.1 ; Procedure Descriptions; Engine Oil, Draining, Replacing Oil Filter, and Filling .

1.6 Engine Support, Removing and Installing

Removing

Special tools and workshop equipment required

♦ Engine Support Bridge - Spindle - 10-222A/11-

– Remove the engine bracket. Refer to
⇒ "2.2 Engine Mount, Removing and Installing", page 30 .

– Lift the engine using the Engine Support Bridge - Spindle - 10-222A/11- -1- to dimension -a-.

• Dimension -a- = approximately 30 mm.

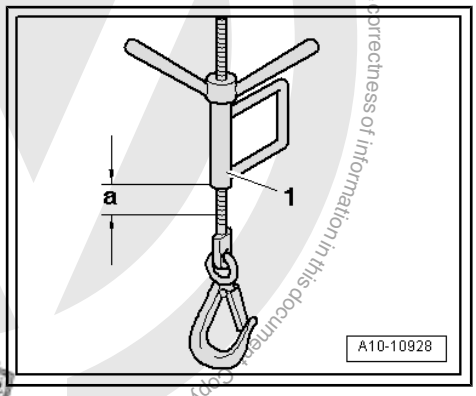

Protected by copyright. Copying for private or commercial purposes, in part or whole, is not permitted unless authorised by Volkswagen AG. Volkswagen AG does not guarantee or accept any liability with respect to the correctness of information in this document. Copyright by Volkswagen AG.

– Remove the bolts -1, 2 and 3- and engine support.

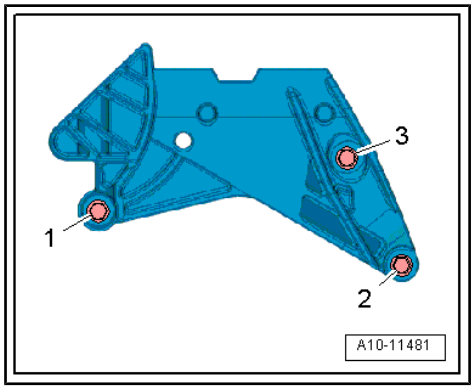

Installing

Install in reverse order of removal. Note the following:

– Install the engine mount. Refer to
⇒ “2.2 Engine Mount, Removing and Installing”, page 30 .

Engine Support - Tightening Specification and Sequence

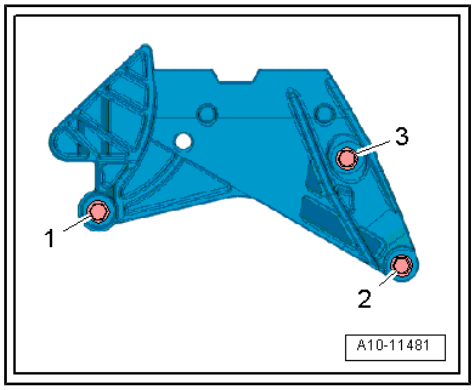

Note

Replace the bolts.

– Tighten the bolts in steps in the sequence shown:

Step	Bolts	Tightening Specification/Additional Turn
1.	-1 to 3-	7 Nm
2.	-1 to 3-	40 Nm
3.	-1 to 3-	Tighten an additional 90°

Protected by copyright. Copying for private or commercial purposes, in part or in whole, is not permitted unless authorised by Volkswagen AG. Volkswagen AG does not guarantee or accept any liability with respect to the correctness of information in this document. Copyright by Volkswagen AG.

2 Cylinder Block, Transmission Side

⇒ “2.1 Overview - Cylinder Block, Transmission Side”, page 57

⇒ “2.2 Flywheel, Removing and Installing”, page 58

⇒ “2.3 Sealing Flange, Removing and Installing, Transmission Side”, page 59

2.1 Overview - Cylinder Block, Transmission Side

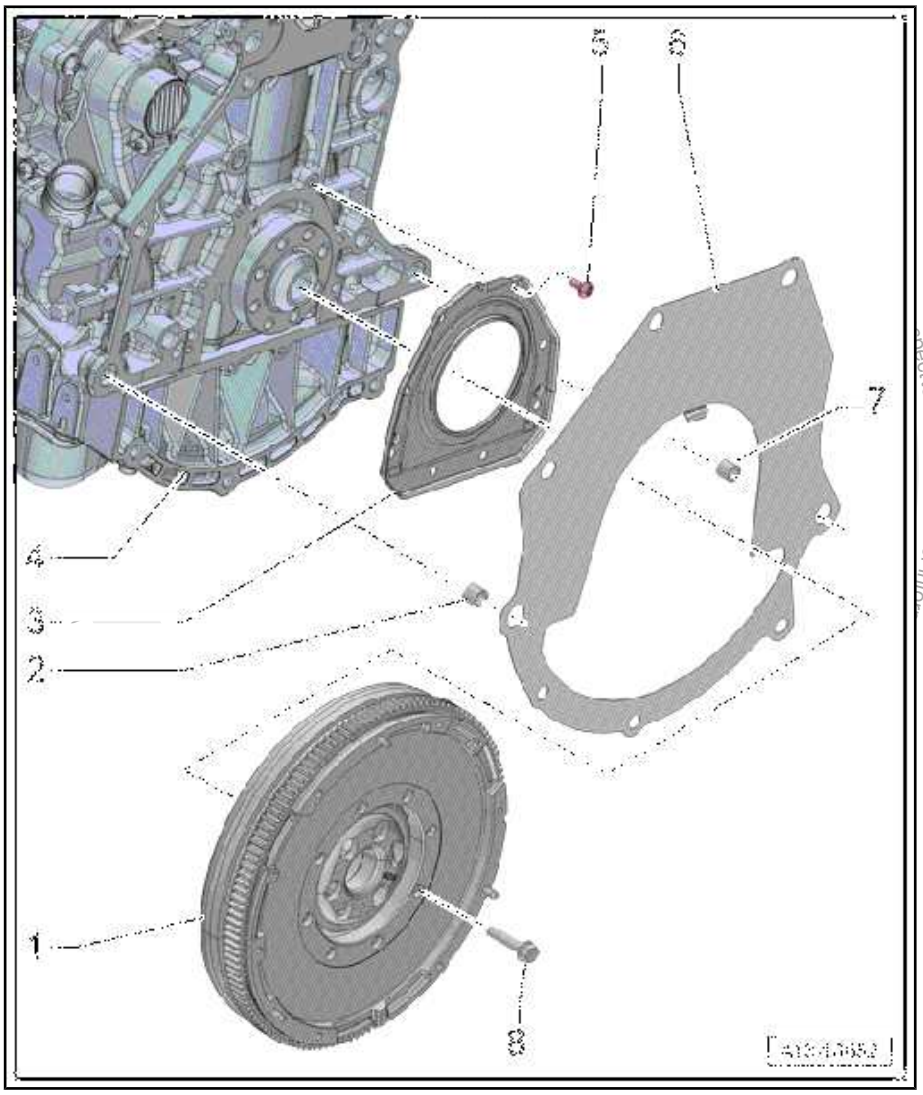

1 - Flywheel

- ❑ Removing and installing. Refer to ⇒ “2.2 Flywheel, Removing and Installing”, page 58 .
- ❑ It is possible to install in one position only, the holes are offset.

2 - Alignment Sleeve

3 - Sealing Flange, Transmission Side

- ❑ With seal
- ❑ Replace after removing
- ❑ Removing and installing. Refer to ⇒ “2.3 Sealing Flange, Removing and Installing, Transmission Side”, page 59 .
- ❑ Do not oil or grease the sealing lip of seal
- ❑ Wipe off any oil on the crankshaft bearing pin with a clean cloth before installing.
- ❑ Guide sleeve may only be removed after the sealing flange has been slid onto the crankshaft pin.

4 - Cylinder Block

5 - Bolt

- ❑ Tightening specification and sequence. Refer to ⇒ “2.3 Sealing Flange, Removing and Installing, Transmission Side”, page 59 .

6 - Intermediate Plate

- ❑ Illustration does not correspond to version in vehicle.
- ❑ Must be located on dowel sleeves
- ❑ Be careful not to damage or bend when installing
- ❑ Is hooked in at sealing flange. Refer to ⇒ Fig. ““Installing Intermediate Plate”“ , page 58

7 - Alignment Sleeve

8 - Bolt

- ❑ 60 Nm + 90° turn
- ❑ Replace after removing

❑ For the dual-mass flywheel

Note

Only six bolts are installed, two bolt openings remain open.

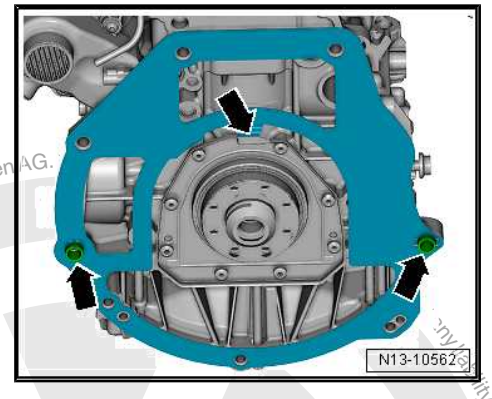

Installing Intermediate Plate

– Hook in intermediate plate at sealing flange and push it onto the alignment sleeves -arrows-.

2.2 Flywheel, Removing and Installing

Special tools and workshop equipment required

♦ Flywheel Retainer - 3067-

Caution

This procedure contains mandatory replaceable parts. Refer to component overview prior to starting procedure.

Mandatory Replacement Parts

♦ Bolts - Flywheel

Removing

• The transmission is removed.

Note

♦ *Remove the bolts -B- by hand. Do not use an air-powered or impact wrench.*

♦ *When removing bolts, ensure bolt head does not come in contact with the flywheel.*

♦ *Turn the flywheel -A- until the bolts -B- line up with the holes -arrows-.*

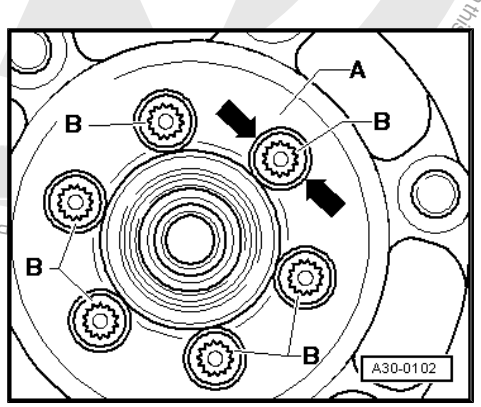

– Insert the Flywheel Retainer - 3067- into the hole in the cylinder block -B-.

– Loosen and remove bolts for flywheel.

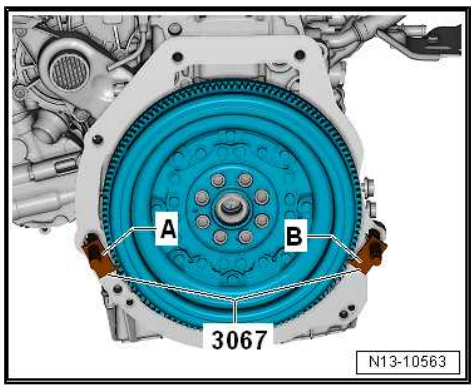

Installing

Install in reverse order of removal. Note the following:

Note

Replace the bolts that were tightened with an additional turn.

Protected by copyright. Copying for private or commercial purposes, in part or in whole, is not permitted unless authorised by Volkswagen AG. No liability with respect to the correctness of information in this

– Insert the Flywheel Retainer - 3067- into the hole in the cylinder block -A-.

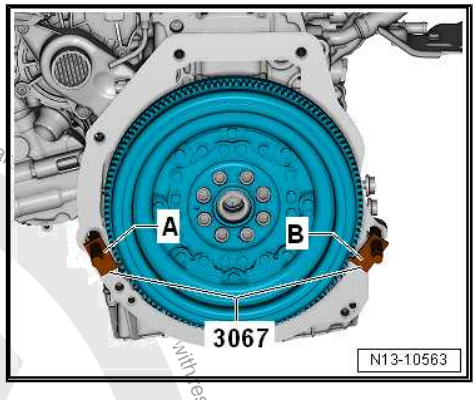

Tightening Specifications

♦ Refer to
⇒ “2.1 Overview - Cylinder Block, Transmission Side”, page 57 .

2.3 Sealing Flange, Removing and Installing, Transmission Side

Special tools and workshop equipment required

♦ Seal Installer - Sealing Flange Guide Sleeve - T20097-

♦ Hand drill with brush attachment

♦ Protective eyewear

♦ For the correct sealant. Refer to the Parts Catalog.

Removing

• The transmission is removed.

– Remove the flywheel. Refer to
⇒ “2.2 Flywheel, Removing and Installing”, page 58 .

– Unhook the intermediate plate at sealing flange and at the alignment sleeves -arrows-.

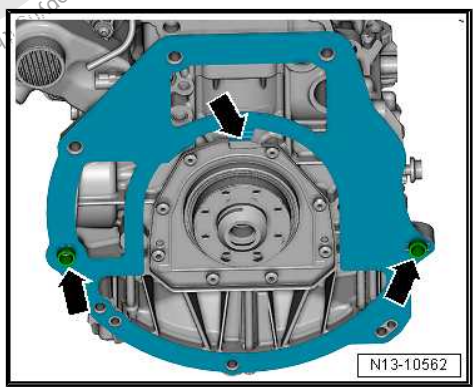

Protected by copyright. Copying for private or commercial purposes, in part or in whole, is not permitted unless authorised by Volkswagen AG. Volkswagen AG does not guarantee or accept any liability with respect to the correctness of information in this document. Copyright by Volkswagen AG.

– Remove the bolts -1 through 6-.

– Remove sealing flange.

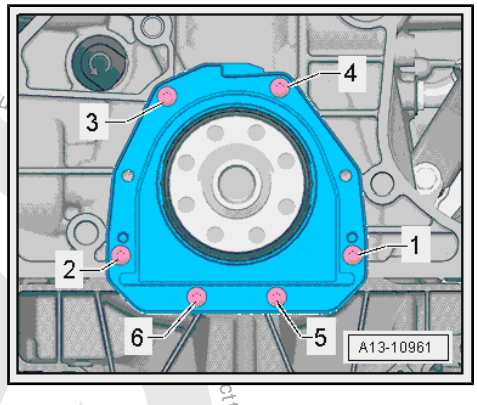

Installing

Note

- *Be sure to check the expiration date of the silicone sealant.*
- *The sealing flange must be installed within 5 minutes after application of Silicone Sealant.*
- *To prevent contamination of the lubricating system with sealant residue, place a clean cloth over the open components of the oil pan.*

CAUTION

Risk of injuring the eyes from sealant residue.

– Wear protective eyewear.

– Remove remaining sealant on the cylinder head with a flat blade scraper or with a rotating plastic brush.

– Sealing surfaces must be free of oil and grease.

– Cut the tube nozzle at the front marking (nozzle diameter: approximately 2 mm).

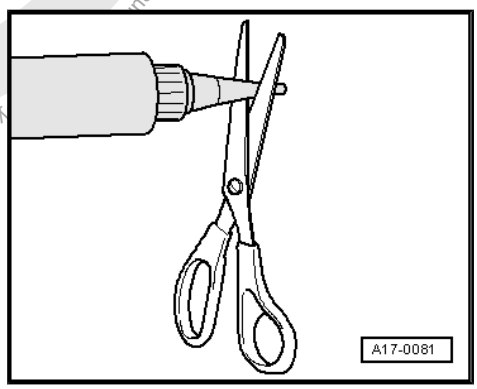

– Apply silicone sealant as illustrated to the clean sealing surface of the sealing flange.

- Sealant bead thickness: 2 to 3 mm.

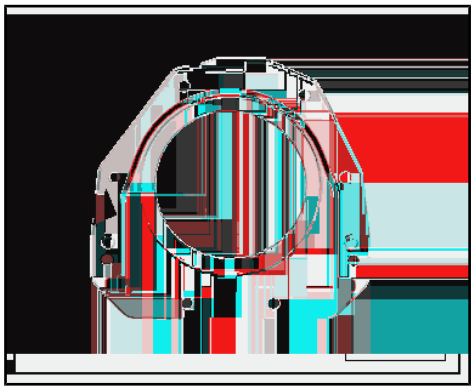

Note

- *The sealing flange must be installed within five minutes after application of silicon sealant.*
- *The sealant bead may not be thicker than specified, otherwise excess sealant could enter the oil pan and clog the oil intake tube.*

Protected by copyright. Copying for private or commercial purposes, in part or in whole, is not permitted unless authorised by Volkswagen AG. Volkswagen AG does not guarantee or accept any liability with respect to the correctness of information in this document. © Copyright by Volkswagen AG.

– Position the Seal Installer - Sealing Flange Guide Sleeve - T20097- on the crankshaft pins -A-.
– Lightly coat the seal with engine oil.
– Slide the sealing flange onto the crankshaft pins with the Seal Installer - Sealing Flange Guide Sleeve - T20097- .

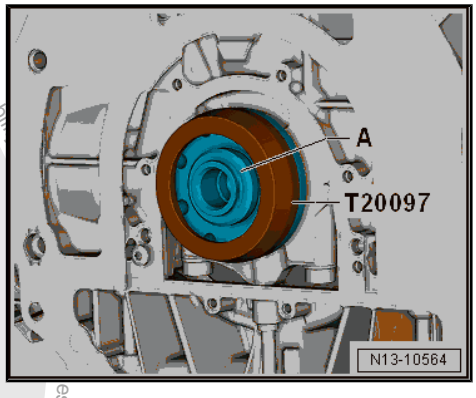

– Tighten the new bolts in evenly in the sequence shown:

Step	Bolts	Tightening Specification/Additional Turn
1.	-1 to 6-	Install all the way in by hand.
2.	-1 to 6-	9 Nm

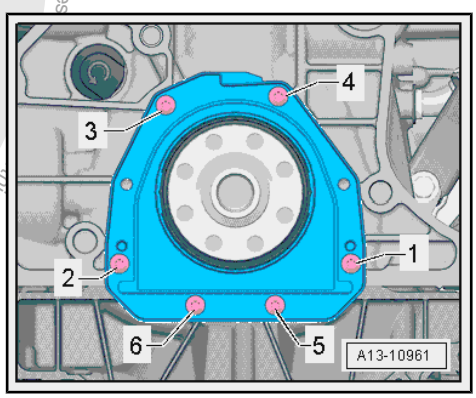

Note

- *Only six bolts are installed, two bolt openings remain open.*
- *After installing sealing flange, the sealant must dry for approximately 30 minutes. Only after then may the engine oil be replenished.*

Assemble in reverse order of disassembly.

Tightening Specifications

- Refer to
⇒ “2.1 Overview - Cylinder Block, Transmission Side”, page 57 .

This document is authorised by Volkswagen AG. Volkswagen AG does not guarantee or accept any liability. Copyright for commercial purposes, in part or in whole, is prohibited.

Copying for private or commercial purposes, in part or in whole is not permitted unless authorised by Volkswagen AG. Volkswagen AG does not guarantee or accept any liability with respect to the correctness of information in this document.

3 Crankshaft

⇒ “3.1 Overview - Crankshaft”, page 62
⇒ “3.2 Crankshaft Dimensions”, page 64
⇒ “3.3 Main Bearing Shells Allocation”, page 64
⇒ “3.4 Crankshaft Needle Bearing, Replacing”, page 65
⇒ “3.5 Crankshaft, Measuring Axial Clearance”, page 67
⇒ “3.6 Crankshaft, Measuring Radial Clearance”, page 67
⇒ “3.7 Sensor Wheel, Removing and Installing”, page 68

3.1 Overview - Crankshaft

Note

Secure the engine to the assembly stand using the Engine and Gearbox Bracket - VAS6095A- when performing the assembly work. Refer to ⇒ “1.3 Engine, Securing on Engine and Transmission Holder”, page 23 .

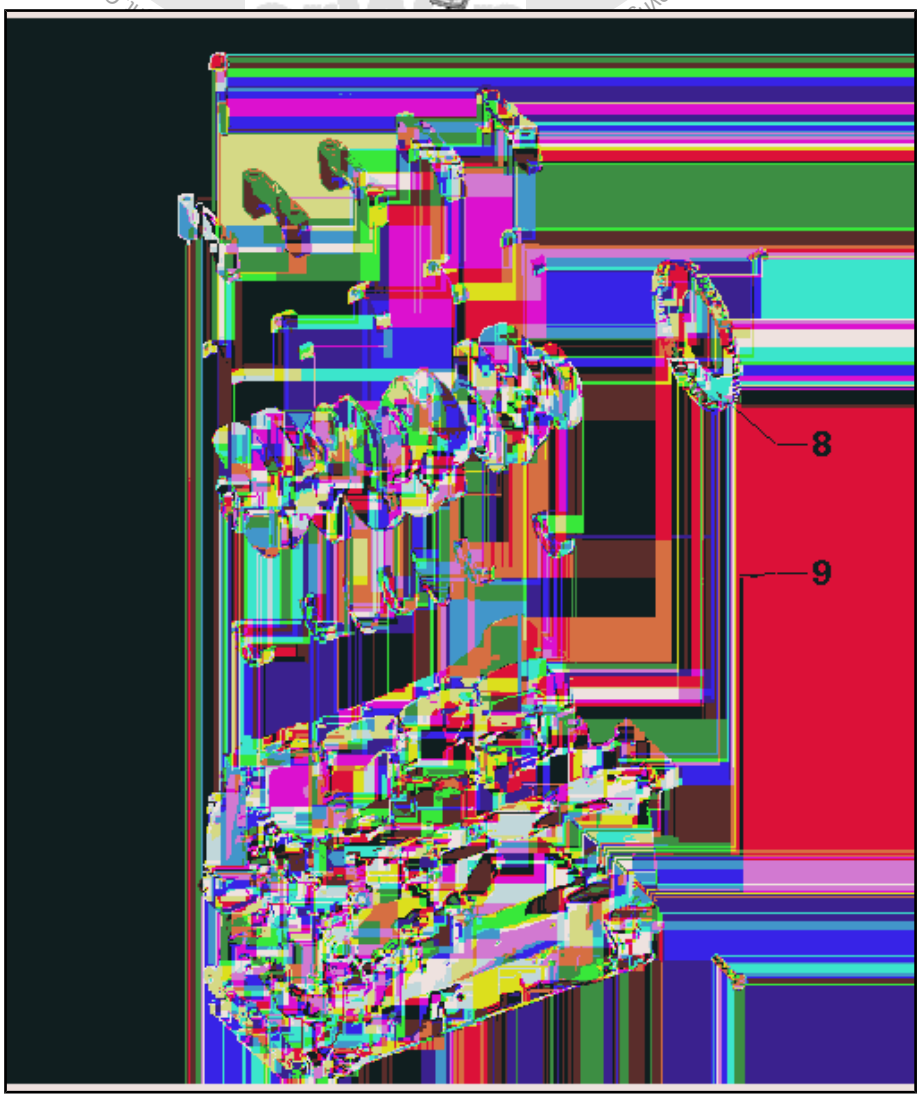

1 - Cylinder Block

2 - Bearing Shell for Cylinder Block

- ❑ With lubricating groove
- ❑ Lubricate
- ❑ Do not interchange used bearing shells (mark)
- ❑ Crankshaft bearing shells identification (classification). Refer to ⇒ “3.3 Main Bearing Shells Allocation”, page 64 .

3 - Crankshaft

- ❑ After removal, lay aside so that sensor wheel -item 8- ⇒ Item 8 (page 63) is not rested on and becomes damaged
- ❑ If the crankshaft is being replaced, then the bearing shells must be allocated to the bearing cover. Refer to ⇒ “3.3 Main Bearing Shells Allocation”, page 64 .
- ❑ Axial clearance. Refer to ⇒ “3.5 Crankshaft, Measuring Axial Clearance”, page 67 .
- ❑ Radial clearance. Refer to

⇒ “3.6 Crankshaft, Measuring Radial Clearance”, page 67 .

- ❑ Do not turn crankshaft when measuring radial play
- ❑ Crankshaft dimensions. Refer to ⇒ “3.2 Crankshaft Dimensions”, page 64 .

4 - Bearing Shell for Bearing Cap

- ❑ Without lubricating groove
- ❑ Lubricate
- ❑ Do not interchange used bearing shells (mark)
- ❑ Crankshaft bearing shells identification (classification). Refer to ⇒ “3.3 Main Bearing Shells Allocation”, page 64 .

5 - Bolt

- ❑ Replace after removing
- ❑ Tightening sequence. Refer to ⇒ Fig. ““Crankshaft, Tightening Sequence”“ , page 63

6 - Bearing Cap

- ❑ Bearing cap 1: belt pulley side
- ❑ Retaining tabs of bearing shells and cylinder block/bearing caps must lie above one another

7 - Bolt

- ❑ 10 Nm + 90°
- ❑ Replace after removing
- ❑ Replace sensor wheel every time bolts are loosened. Refer to ⇒ “3.7 Sensor Wheel, Removing and Installing”, page 68 .

8 - Sensor Wheel

- ❑ For Engine Speed Sensor - G28-
- ❑ It is possible to install in one position only, the holes are offset.
- ❑ Replace sensor wheel every time bolts are loosened
- ❑ Removing and installing. Refer to ⇒ “3.7 Sensor Wheel, Removing and Installing”, page 68 .

9 - Thrust Washers

- ❑ For bearing 3
- ❑ Lubricate

10 - Bolt

- ❑ Replace after removing
- ❑ Tightening sequence. Refer to ⇒ Fig. ““Crankshaft, Tightening Sequence”“ , page 63

Crankshaft, Tightening Sequence

– Tighten the crankshaft bolts in the sequence -1 to 10- and -arrow A- as follows.

Step	Bolts	Tightening Specification/Additional Turn
1.	-1- through -10- and -arrows A-	Install hand-tight
2.	-1- through -10-	65 Nm
3.	-1- through -10-	Turn an additional 90°
4.	-A arrows-	20 Nm
5.	-A arrows-	Turn an additional 90°

Protected by copyright. Copying for private or commercial purposes, in part, is not permitted unless authorised by Volkswagen AG. Volkswagen AG does not guarantee or accept any liability with respect to the correctness of information in this document. Copyright by Volkswagen AG.

Protected by copyright. Copying for private or commercial purposes, in part or in whole, is not permitted unless authorised by Volkswagen AG. Volkswagen AG does not guarantee or accept any liability with respect to the correctness of information in this document. Copyright by Volkswagen AG.

3.2 Crankshaft Dimensions

(Dimensions in mm)

Reconditioning Dimension [1]	Crankshaft Bearing Pin Diameter	Connecting Rod Bearing Pin Diameter
Basic dimension	58.00	47.80

[1] The preparation of worn crankshafts is not provided.

3.3 Main Bearing Shells Allocation

The bearing shells are allocated to the cylinder block with the correct thickness at the factory. Colored spots serve to identify the bearing thicknesses.

The code letters on the lower contact surface or on the top of the cylinder block identify which bearing shell and where it must be mounted on the cylinder block (upper bearing shell).

The code letters on the crankshaft identify which bearing shells and where they must be installed in the bearing cover (lower bearing shell).

The first letter is for bearing cover one, the second for bearing cover two, etc.

Cylinder Block Bearing Shell Identification:

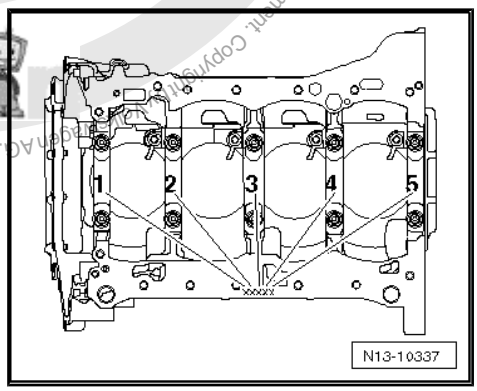

Note

The cylinder block identification may be located either on the oil pan sealing surface or on the top (transmission side) of the cylinder block.

The identification on the cylinder block is for the upper bearing shell.

– Write down the letters and then use the table to find the color identification.

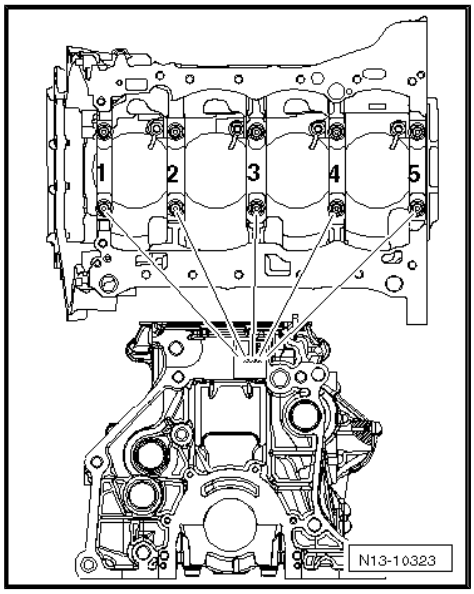

Bearing Cap Bearing Shell Identification:

The identification on the crankshaft is for the lower bearing shell.

– Write down the letters and then use the table to find the color identification.

S	=	Black
R	=	Red
G	=	Yellow
B	=	Blue
W	=	White

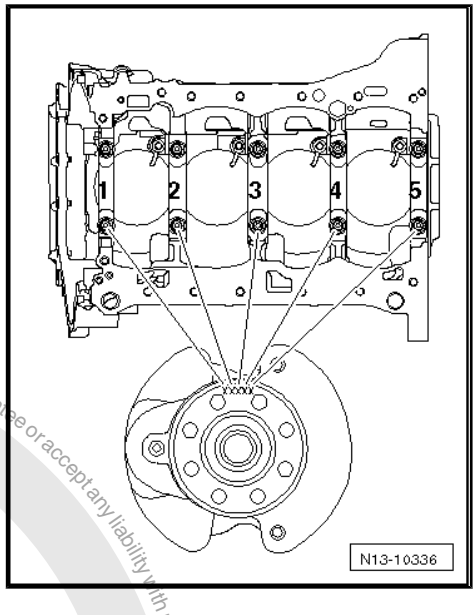

3.4 Crankshaft Needle Bearing, Replacing

Only for Vehicles Equipped with a Twin Clutch Transmission

Special tools and workshop equipment required

- ♦ Counter-support for example Puller - Kukko Counterstay - 22/1-
- ♦ Internal puller, for example Puller - Kukko Internal - 14-19mm - 21/2-
- ♦ Bearing Installer - Bearing Press Piece - VW207C-

> **Caution**
>
> ***This procedure contains mandatory replaceable parts. Refer to component overview prior to starting procedure.***

Mandatory Replacement Parts

- ♦ Bearing - Crankshaft Needle

Conditions

- Always replace the needle bearing -arrow- after the engine and transmission are separated.
- The front edges of the internal puller must not be broken off.

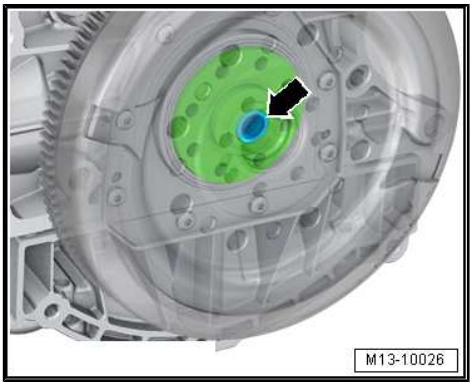

Protected by copyright. Copyright for private or commercial purposes in part or in whole, is not permitted unless authorised by Volkswagen AG. Volkswagen AG does not guarantee or accept any liability with respect to the correctness of information in this document. Copyright by Volkswagen AG.

Protected by copyright. Copying for private or commercial purposes, in part or in whole, is not permitted unless authorised by Volkswagen AG. Volkswagen AG does not guarantee or accept any liability with respect to the correctness of information in this document.

Remove Needle Bearing

- Remove the needle bearing -1- from the crankshaft -2- using a standard internal puller such as the Puller - Kukko Internal - 14-19mm - 21/2- and counter support Puller - Kukko Counter-stay - 22/1- .
- The internal puller must be positioned behind the needle ring -arrow-.

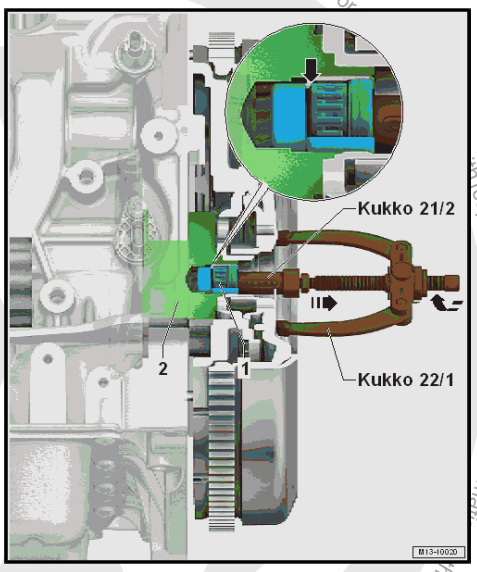

Installing

- Clean the bearing seat in the crankshaft and thinly coat with grease.
- Drive the needle bearing into the crankshaft up to the installation depth using the Bearing Installer - Bearing Press Piece - VW207C- .

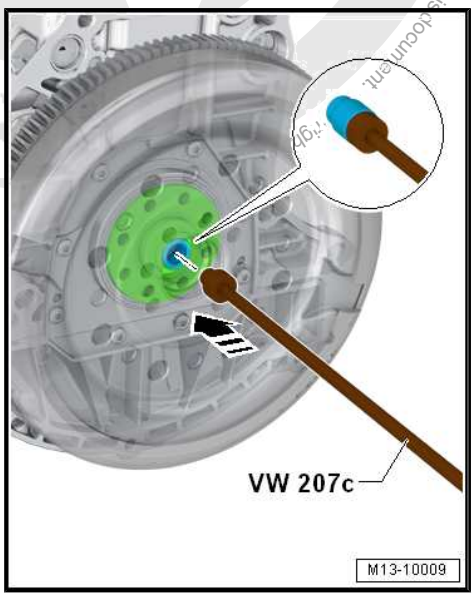

Installation Depth Dimension -a- = 2.0 mm

Note

If the needle bearing was unintentionally pushed in too deeply, it must be replaced, because it will be damaged when it is removed again.

3.5 Crankshaft, Measuring Axial Clearance

Special tools and workshop equipment required

- ♦ Dial Gauge Holder - VW387-
- ♦ Dial Gauge - 0-10mm - VAS6079-

Procedure

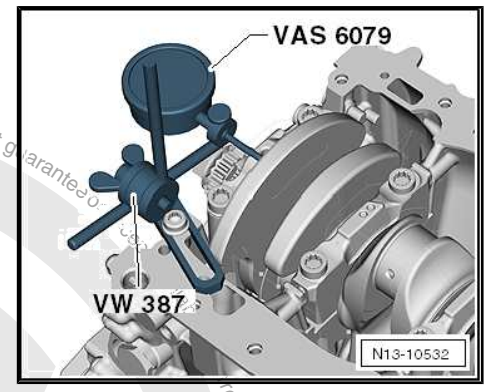

– Attach the Dial Gauge - 0-10mm - VAS6079- with the Dial Gauge Holder - VW387- to the cylinder block and with approximately 2 mm tension, set indicator against crankshaft counterweight.

– Push the crankshaft against the dial gauge by hand and set the dial gauge to “0”.

– Remove the crankshaft from the dial gauge and read the measurement.

Axial clearance:

- New: 0.07 to 0.23 mm.
- Wear limit: 0.30 mm.

3.6 Crankshaft, Measuring Radial Clearance

Special tools and workshop equipment required

- ♦ Plastigage®

Procedure

Note

- ♦ *Do not interchange used bearings*
- ♦ *Bearing shells that are worn down to the nickel layer must be replaced.*

– Remove the crankshaft bearing cap and clean the bearing cap and pins.

– Place Plastigage® over entire width of bearing journal or into bearing shells.

- Plastigage® must rest in center of bearing shell.

Protected by copyright. Copying for private or commercial purposes, in part or in whole, is not permitted unless authorised by Volkswagen AG. Volkswagen AG does not guarantee or assume any liability with respect to the correctness of information in this document. Copyright by Volkswagen AG.

– Install the crankshaft bearing and secure with the old bolts -1 to 10-. Refer to
⇒ Fig. ""Crankshaft, Tightening Sequence"" , page 63 . Do not turn the crankshaft.

Note

Ignore bolts -arrow A-.

– Remove the crankshaft bearing cap again.

– Compare width of Plastigage® with calibrated scale.

Radial clearance:

- New: 0.017 to 0.037 mm.
- Wear limit: 0.15 mm.

3.7 Sensor Wheel, Removing and Installing

– Removing engine. Refer to
⇒ "1.1 Engine, Removing", page 8 .

– Remove the sealing flange on the transmission side. Refer to
⇒ "2.3 Sealing Flange, Removing and Installing, Transmission Side", page 59 .

– Remove the oil pan upper section. Refer to
⇒ "1.4 Oil Pan Upper Section, Removing and Installing", page 185 .

– Remove the balance shaft timing chain. Refer to
⇒ "3.4 Balance Shaft Drive Chain, Removing and Installing", page 130

– Remove the connecting rod bearing cover.

– Remove the crankshaft bearing cover.

– Remove the crankshaft and the sensor wheel.

– Replace the sensor wheel -2- each time the bolts -1- are loosened.

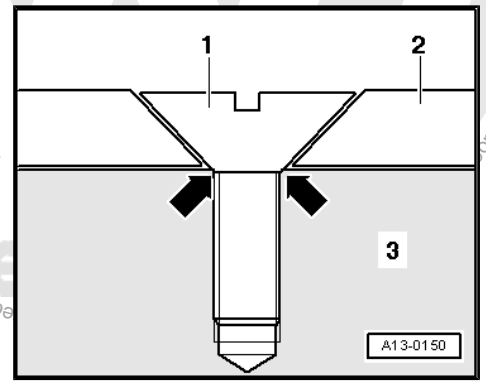

Note

- *After tightening a second time, the attachment point of the countersunk screws of the sensor wheel are so deformed that the screw heads lie on the crankshaft -3- -arrows- and the sensor wheel is loose underneath the screws.*
- *Installation of the sensor wheel is only possible in one position, the bore holes are shifted.*

Tightening Specifications

- Refer to ⇒ "3.1 Overview - Crankshaft", page 62 .

Protected by copyright. Copying for private or commercial purposes, in part or in whole, is not permitted unless authorised by Volkswagen AG. Volkswagen AG does not guarantee or accept any liability with respect to the correctness of information in this do

4 Balance Shaft

⇒ “4.1 Overview - Balance Shaft”, page 69

⇒ “4.2 Balance Shaft, Removing and Installing”, page 70

⇒ “4.3 Balance Shaft Sealing Ring, Replacing, Intake Side”, page 75

4.1 Overview - Balance Shaft

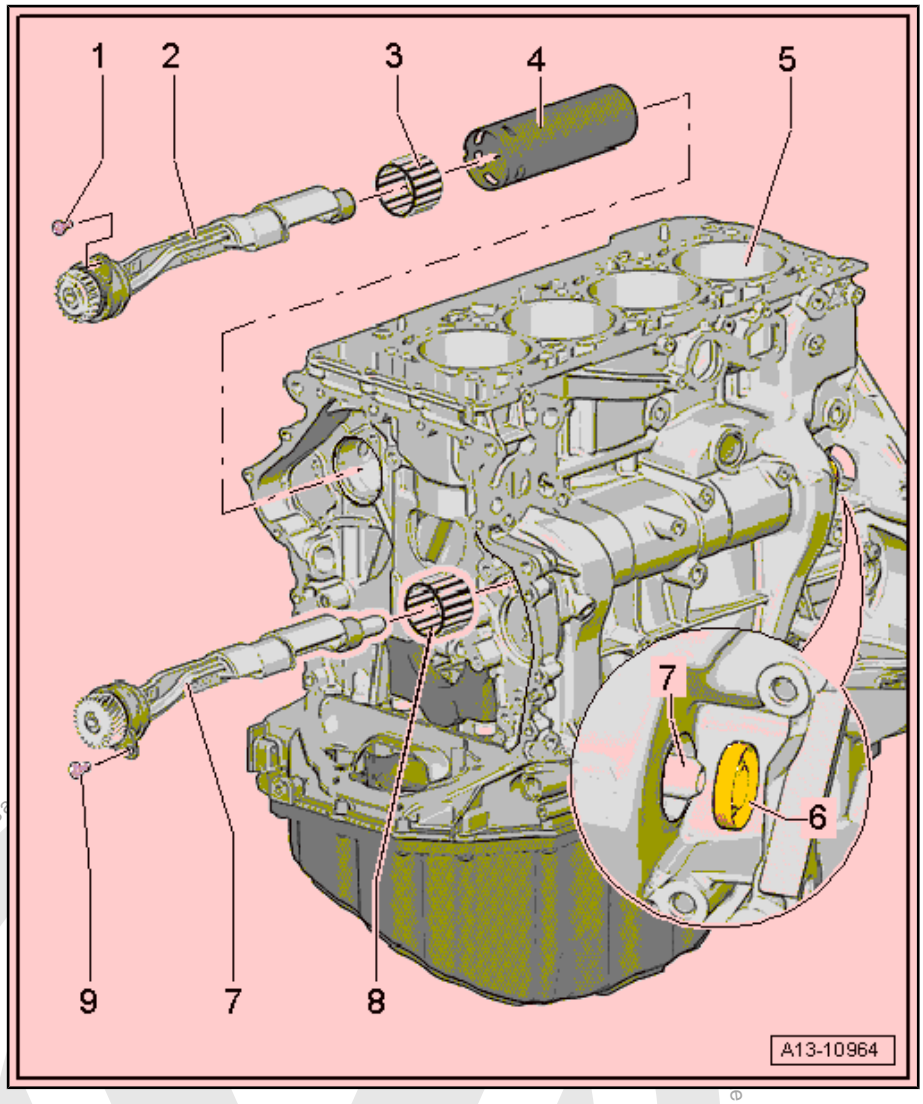

1 - Bolt

- ❑ 4 Nm 45°
- ❑ Replace after removing

2 - Balance Shaft

- ❑ Exhaust side
- ❑ Must be replaced after removing
- ❑ Lubricate the bearing with engine oil
- ❑ Replacing. Refer to ⇒ “4.2.2 Balance Shaft Exhaust Side, Removing and Installing”, page 73 .

3 - Needle Bearing Rim

- ❑ Replace the balance shaft after each removal.
- ❑ Install a new needle bearing with the same color identification

4 - Pipe for Balance Shaft

- ❑ Installed position. Refer to ⇒ Fig. ““Balance Shaft Pipe - Installed Position”“ , page 70

5 - Cylinder Block

6 - Balance Shaft Seal Intake Side

- ❑ Replacing. Refer to ⇒ “4.3 Balance Shaft Sealing Ring, Replacing, Intake Side”, page 75 .

7 - Balance Shaft

- ❑ Intake side
- ❑ Must be replaced after removing
- ❑ Lubricate the bearing with engine oil
- ❑ Replacing. Refer to ⇒ “4.2.1 Balance Shaft Intake Side, Removing and Installing”, page 70 .

8 - Needle Bearing Rim

- ❑ Replace the balance shaft after each removal.
- ❑ Install a new needle bearing with the same color identification

Protected by copyright. Copyright by Volkswagen AG.

Protected by copyright. Copying for private or commercial purposes, in part or in whole, is not permitted unless authorised by Volkswagen AG. Volkswagen AG does not guarantee or accept any liability with respect to the correctness and completeness of this document. Copyright by Volkswagen AG.

9 - Bolt

- ❑ 4 Nm 45°
- ❑ Replace after removing

Balance Shaft Pipe - Installed Position

The openings -arrow- must face the chain side.

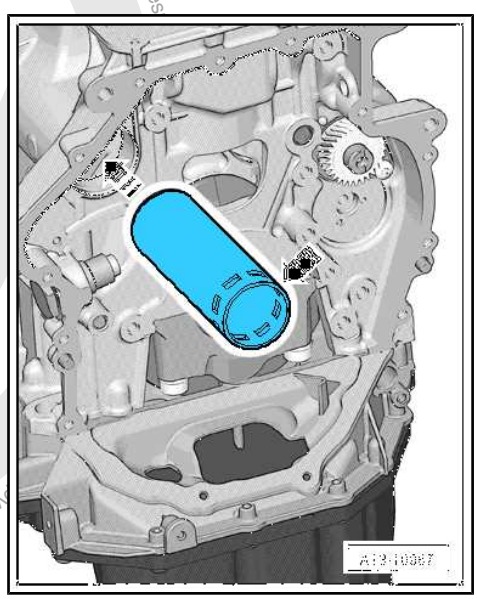

4.2 Balance Shaft, Removing and Installing

⇒ “4.2.1 Balance Shaft Intake Side, Removing and Installing”, page 70 .

⇒ “4.2.2 Balance Shaft Exhaust Side, Removing and Installing”, page 73 .

4.2.1 Balance Shaft Intake Side, Removing and Installing

Balance shaft and needle bearing must be replaced after every removal. Install a new needle bearing with the same color identification

Caution

This procedure contains mandatory replaceable parts. Refer to component overview prior to starting procedure.

Mandatory Replacement Parts

- ♦ Balance Shaft - Intake Side
- ♦ Bearing - Needle Rim
- ♦ Bolt - Intake Side Balance Shaft
- ♦ Bolt - Intermediate Sprocket
- ♦ O-ring - Intermediate Shaft
- ♦ Sprocket - Intermediate

Removing

- Engine removed.

– Remove the toothed belt from the coolant pump. Refer to ⇒ “2.8 Coolant Pump Toothed Belt, Removing and Installing”, page 235 .

– Remove timing chain upper cover. Refer to ⇒ “2.2.1 Upper Timing Chain Cover, Removing and Installing”, page 106 .

– Remove the lower timing chain cover. Refer to ⇒ “2.2.2 Lower Timing Chain Cover, Removing and Installing”, page 108 .

– Remove the camshaft timing chain. Refer to ⇒ “3.3 Camshaft Timing Chain, Removing and Installing”, page 118 .

– Remove the balance shaft drive chain. Refer to ⇒ “3.4 Balance Shaft Drive Chain, Removing and Installing”, page 130 .

– Remove the bolt -2-.

– Remove the drive wheel -1- for the toothed belt from the coolant pump.

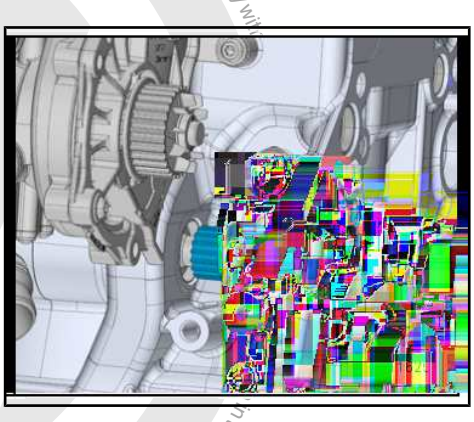

– Remove the intermediate shaft sprocket -1-.

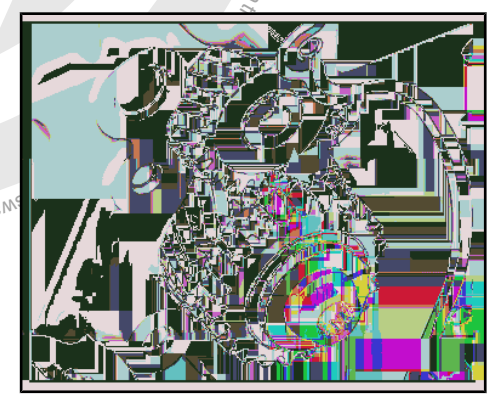

– Remove the bolt -2- for the intake side balance shaft and remove the balance shaft.

Installing

Protected by copyright. Copying for private or commercial purposes, in part or in whole, is not permitted unless authorised by Volkswagen AG. Volkswagen AG does not guarantee or accept any liability with respect to the correctness of information in this document. Copyright by Volkswagen AG.

– Lubricate the balance shaft mountings -arrows- with engine oil.

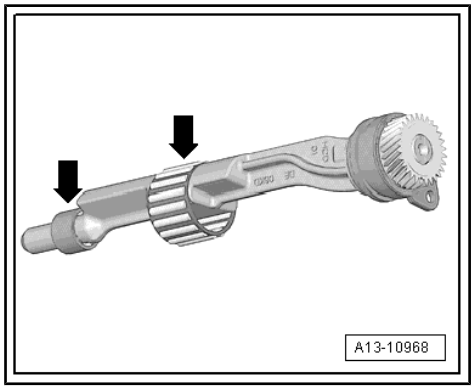

– Install the intake side balance shaft and tighten the bolt -2-.

– Replace the O-ring -1- and coat with engine oil.

– Coat the mounting pin with engine oil and insert it. The alignment pin -arrow- for the mounting pin must engage in the hole in the cylinder block.

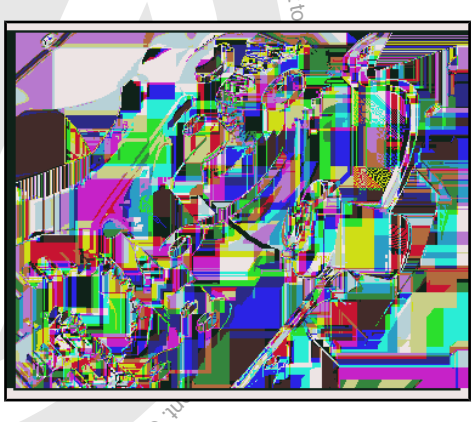

Note

- *Always replace the intermediate sprocket. Otherwise the backlash will not adjust itself and it could result in engine damage.*
- *The new intermediate sprocket has an anti-friction coating that wears off after a short period of use, which automatically adjusts the backlash.*

– Mark the tooth face on the intermediate sprocket -arrows-.

– Install the intermediate sprocket; the marking on the balance shaft must be between the markings on the tooth faces.

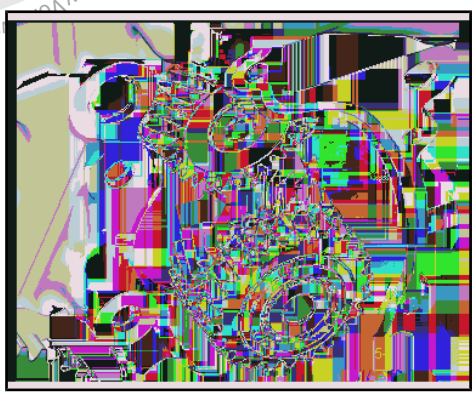

Protected by copyright. Copyright by Volkswagen AG. Commercial purposes, in part or in whole, is not permitted unless authorised by Volkswagen AG. Volkswagen AG does not

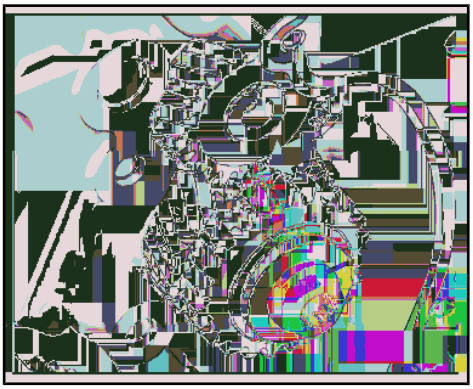

– Tighten the bolt -1- for the intermediate sprocket: tightening sequence. Refer to ⇒ Fig. ""Intermediate Sprocket Tightening Sequence"" , page 118 .

– Check the markings on the intermediate sprocket/balance shaft -arrow-.

Assemble in reverse order of disassembly. Note the following:

– Install the balance shaft drive chain. Refer to ⇒ "3.4 Balance Shaft Drive Chain, Removing and Installing", page 130 .

– Install camshaft timing chain. Refer to ⇒ "3.3 Camshaft Timing Chain, Removing and Installing", page 118 .

– Install the lower timing chain cover. Refer to ⇒ "2.2.2 Lower Timing Chain Cover, Removing and Installing", page 108 .

– Install the upper timing chain cover. Refer to ⇒ "2.2.1 Upper Timing Chain Cover, Removing and Installing", page 106 .

– Replace the intake side balance shaft seal. Refer to ⇒ "4.3 Balance Shaft Sealing Ring, Replacing, Intake Side", page 75 .

– Install the toothed belt on the coolant pump. Refer to ⇒ "2.8 Coolant Pump Toothed Belt, Removing and Installing", page 235 .

Tightening Specifications

♦ Refer to ⇒ "4.1 Overview - Balance Shaft", page 69 .

4.2.2 Balance Shaft Exhaust Side, Removing and Installing

Caution

This procedure contains mandatory replaceable parts. Refer to component overview prior to starting procedure.

Mandatory Replacement Parts

♦ Balance Shaft - Exhaust Side

♦ Bearing - Needle Rim

♦ Bolt - Exhaust Side Balance Shaft

Note

Balance shaft and needle bearing must be replaced after every removal. Install a new needle bearing with the same color identification

Removing

• Engine removed.

– Remove timing chain upper cover. Refer to ⇒ "2.2.1 Upper Timing Chain Cover, Removing and Installing", page 106 .

Protected by copyright. Copyright by Volkswagen AG. Volkswagen AG does not guarantee or accept any liability with respect to the correctness of information in this document. Copyright by Volkswagen AG. Commercial purposes, in part or in whole, is not permitted unless authorised by Volkswagen AG.

– Remove the lower timing chain cover. Refer to ⇒ “2.2.2 Lower Timing Chain Cover, Removing and Installing”, page 108 .

– Remove the camshaft timing chain. Refer to ⇒ “3.3 Camshaft Timing Chain, Removing and Installing”, page 118 .

– Remove the balance shaft drive chain. Refer to ⇒ “3.4 Balance Shaft Drive Chain, Removing and Installing”, page 130 .

– Remove the bolt -1- for the exhaust side balance shaft and remove the balance shaft.

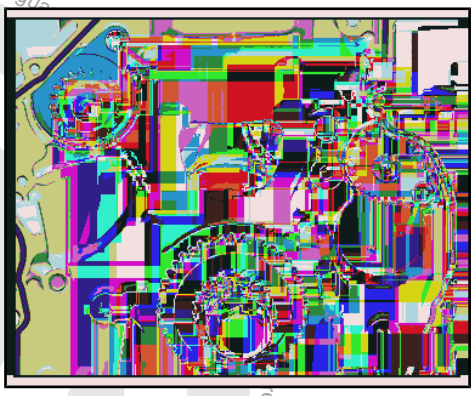

Installing

– Check the installed position for the balance shaft pipe. The openings -arrow- must face the chain side.

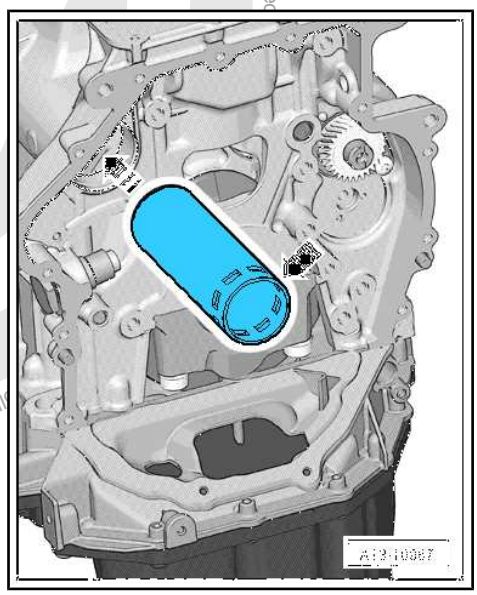

– Lubricate the balance shaft mountings -arrows- with engine oil.

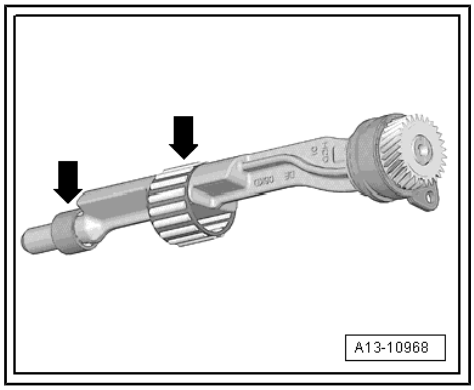

Protected by copyright. Copying for private or commercial purposes, in part or in whole, is not permitted unless authorized by Volkswagen AG. Volkswagen AG does not guarantee or accept any liability with respect to the correctness and completeness of this document.

– Install the exhaust side balance shaft.

– Before tightening the bolt -1- make sure the balance shaft lies level on the crankshaft.

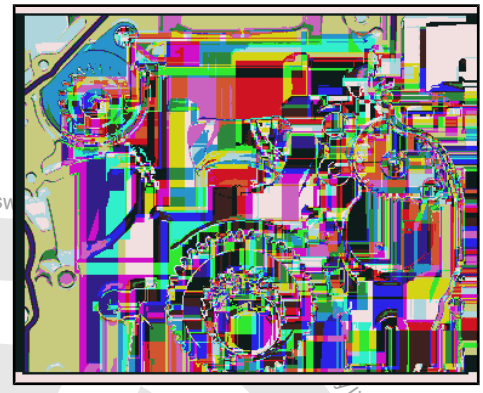

Note

If the balance shaft is not level, then the pipe for the balance shaft must be installed again.

Assemble in reverse order of disassembly. Note the following:

– Install the balance shaft drive chain. Refer to ⇒ “3.4 Balance Shaft Drive Chain, Removing and Installing”, page 130 .

– Install camshaft timing chain. Refer to ⇒ “3.3 Camshaft Timing Chain, Removing and Installing”, page 118 .

– Install the lower timing chain cover. Refer to ⇒ “2.2.2 Lower Timing Chain Cover, Removing and Installing”, page 108 .

– Install the upper timing chain cover. Refer to ⇒ “2.2.1 Upper Timing Chain Cover, Removing and Installing”, page 106 .

Tightening Specifications

♦ Refer to ⇒ “4.1 Overview - Balance Shaft”, page 69 .

4.3 Balance Shaft Sealing Ring, Replacing, Intake Side

Special tools and workshop equipment required

♦ Seal Installer, Intermediate Shaft - T10356/1-

Caution

This procedure contains mandatory replaceable parts. Refer to component overview prior to starting procedure.

Mandatory Replacement Parts

♦ Bolt - Sprocket

♦ Seal - Balance Shaft Intake Side

Procedure

– Remove the toothed belt from the coolant pump. Refer to ⇒ “2.8 Coolant Pump Toothed Belt, Removing and Installing”, page 235 .

– Remove the bolt -2-.

– Remove the drive wheel -1- for the toothed belt from the coolant pump.

– Firmly press a screwdriver -1- on the seal surface -2- in direction of -arrow B-.

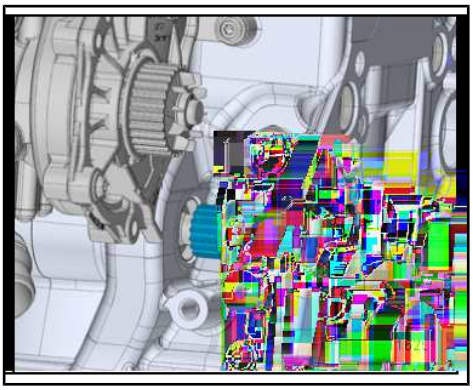

Protected by copyright. Copying for private or commercial purposes, in part or in whole, is not permitted unless authorised by Volkswagen AG. Volkswagen AG. Copyright by Volkswagen AG. liability with respect to the correctness of information in this document.

– Pry out the seal in direction of -arrow A-.

– Clean the running and sealing surface.

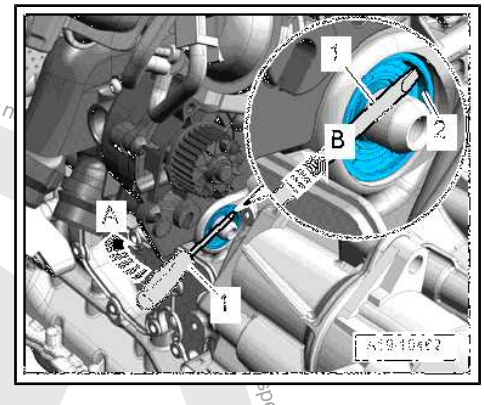

– Coat the sealing surface of the balance shaft -2- with transmission oil.

– Push the seal -1- onto the balance shaft.

• “Luftseite” or (“Outside”) -arrow- must be readable from the outside.

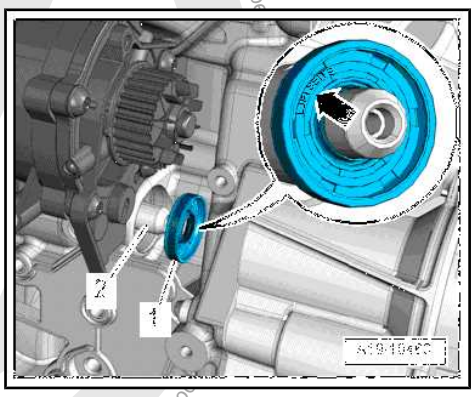

Note

The drive wheel bolt -2- has left-hand thread.

– Mount the Seal Installer, Intermediate Shaft - T10353/1- on the shaft seal -1- and then tighten it all the way into the cylinder block with the bolt -2-. Be careful not to tilt the shaft seal when doing this.

– Install the toothed belt on the coolant pump. Refer to ⇒ “2.8 Coolant Pump Toothed Belt, Removing and Installing”, page 235 .

– Fill with coolant. Refer to ⇒ page 218 .

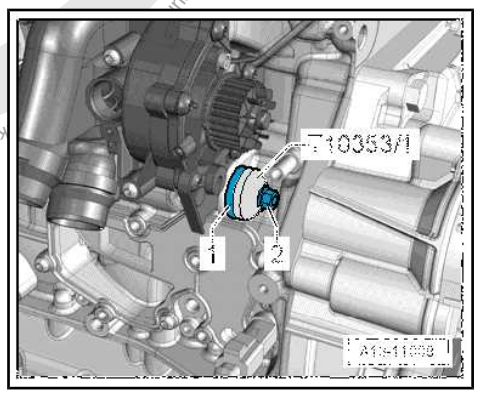

Protected by copyright. Copying for private or commercial purposes, in part or in whole, is not permitted unless authorised by Volkswagen AG. Volkswagen AG does not

Protected copyright. Copyright for private or commercial purposes, in part or in whole, is not permitted unless authorised by Volkswagen AG. Volkswagen AG does not guarantee or accept any liability with respect to the correctness of information

5 Piston and Connecting Rod

⇒ “5.1 Overview - Piston and Connecting Rod”, page 77 .
⇒ “5.2 Pistons, Removing and Installing”, page 78 .
⇒ “5.3 Pistons and Cylinder Bore, Checking”, page 80 .
⇒ “5.4 New Connecting Rod, Separating”, page 84 .
⇒ “5.5 Connecting Rods, Checking Radial Clearance”, page 84 .

5.1 Overview - Piston and Connecting Rod

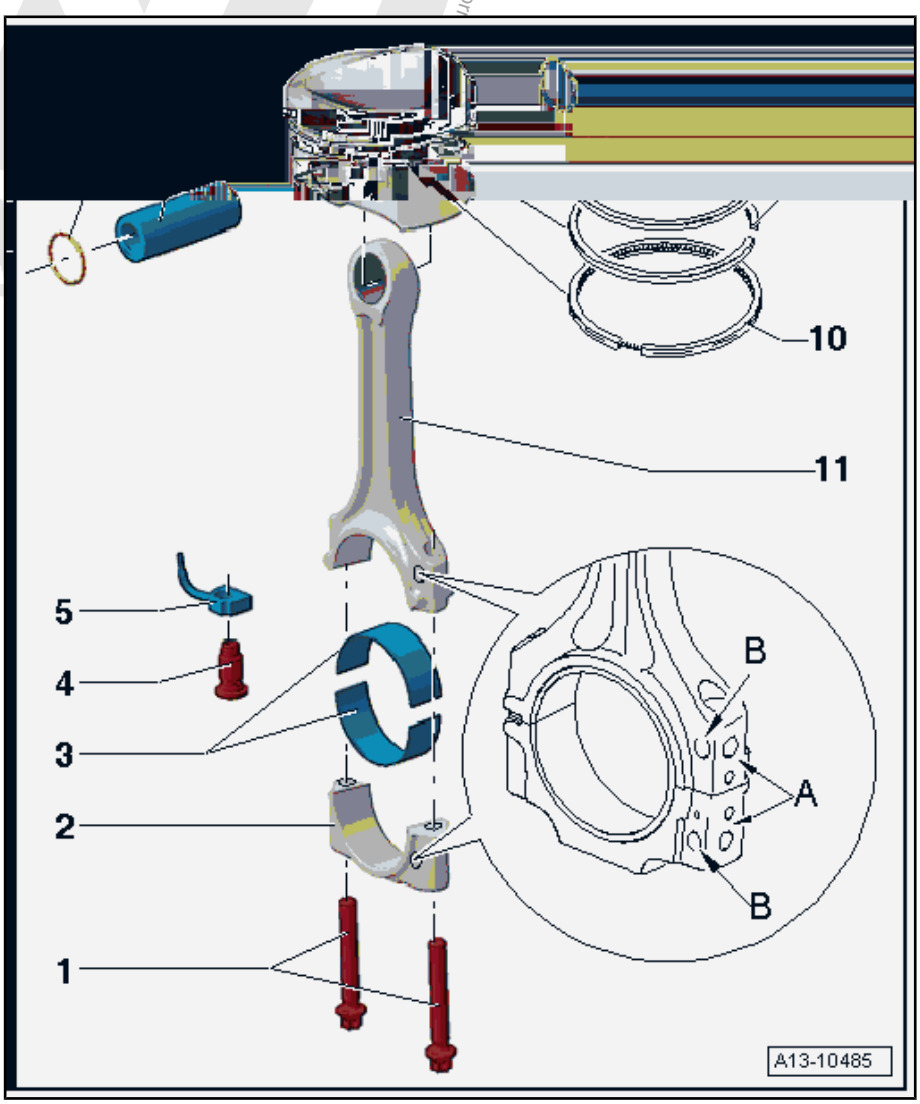

1 - Connecting Rod Bolts

- ❑ 45 Nm + 90°
- ❑ Use old bolt to measure radial play
- ❑ Lubricate the thread and contact surface.
- ❑ Replace after removing

2 - Connecting Rod Bearing Cap

- ❑ Pay attention to the installed position.
- ❑ Due to the separation procedure (cracking) of the connecting rod, the connecting rod bearing cap only fits in one position and only to the corresponding connecting rod.
- ❑ Mark affiliation to cylinder -A-
- ❑ Installed position: the markings -B- face the belt pulley side
- ❑ Disconnect the new connecting rod. Refer to ⇒ “5.4 New Connecting Rod, Separating”, page 84 .

3 - Bearing Shells

- ❑ Installed position. Refer to ⇒ Fig. ““Installed Position of Bearing Shell”“ , page 78
- ❑ Do not interchange used bearing shells (mark)
- ❑ Coat with oil before installing
- ❑ Axial play new: 0.10 to 0.35 mm, wear limit: 0.40 mm
- ❑ Check radial clearance with Plastigage®, new: 0.02 to 0.06 mm, wear limit: 0.09 mm. Do not turn crankshaft when checking radial clearance

4 - Relief Valve

- ❑ 27 Nm

5 - Oil Spray Jet

- ❑ For piston cooling

6 - Locking Ring

- ❑ Replace after removing

7 - Piston Pin

- ❑ Coat with oil before installing

8 - Piston

- ❑ Removing and installing. Refer to ⇒ “5.2 Pistons, Removing and Installing”, page 78 .
- ❑ Mark installed position and cylinder allocation
- ❑ Arrow on piston face points toward belt pulley side
- ❑ Check piston and cylinder bore. Refer to ⇒ “5.3 Pistons and Cylinder Bore, Checking”, page 80 .

9 - Compression Rings

- ❑ Use piston ring pliers (commercially available) for removing and installing
- ❑ Offset gaps by 120°
- ❑ Installed Position: “TOP” “R” mark must face up toward piston crown
- ❑ Ring Gap/Groove Clearance, Checking. Refer to ⇒ “5.3 Pistons and Cylinder Bore, Checking”, page 80 .

10 - Oil Scraping Ring

- ❑ Two-part
- ❑ Install offset gaps by 120° to the neighboring compression ring
- ❑ The “TOP” or “R” marking must face toward the piston crown.
- ❑ Checking the ring gap. Refer to ⇒ “5.3 Pistons and Cylinder Bore, Checking”, page 80 .
- ❑ Side clearance cannot be measured.

11 - Connecting Rod

- ❑ Always replace as a set.
- ❑ Mark affiliation to cylinder -A-
- ❑ Installed position: the markings -B- face the belt pulley side
- ❑ Disconnect the new connecting rod. Refer to ⇒ “5.4 New Connecting Rod, Separating”, page 84 .
- ❑ Radial play, measuring. Refer to ⇒ “5.5 Connecting Rods, Checking Radial Clearance”, page 84 .

Installed Position of Bearing Shell

– Place bearing shells centrally into connecting rod and connecting rod bearing cap.

Dimension -a- must be the same at left and right.

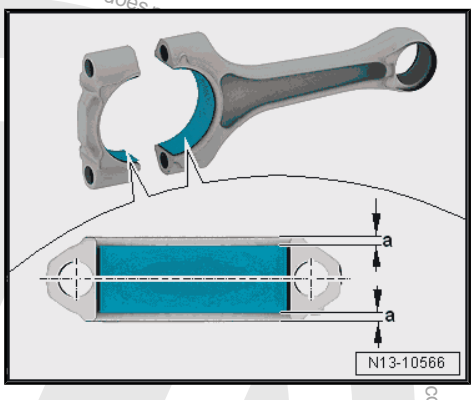

5.2 Pistons, Removing and Installing

Special tools and workshop equipment required

- ♦ Pilot Drift - VW222A-
- ♦ Piston ring compressor, commercially available

Protected by copyright. Copying for private or commercial purposes, in part or in whole, is not permitted unless authorised by Volkswagen AG. Volkswagen AG does not guarantee or accept any liability with respect to the correctness of information in this document. Copyright by Volkswagen AG.

Caution

This procedure contains mandatory replaceable parts. Refer to component overview prior to starting procedure.

Mandatory Replacement Parts

- Bolts - Connecting Rod
- Ring - Locking

Removing

- Secure the engine to the Engine And Transmission Holder - VAS6095- . Refer to ⇒ “1.3 Engine, Securing on Engine and Transmission Holder”, page 23 .
- Remove the cylinder head. Refer to ⇒ “1.3 Cylinder Head, Removing and Installing”, page 94 .
- Remove the oil pan upper section. Refer to ⇒ “1.4 Oil Pan Upper Section, Removing and Installing”, page 185 .
- Mark the installed position and cylinder allocation.
- Mark installed position and connecting rod cylinder -item 11- ⇒ Item 11 (page 78) .
- Remove the connecting rod bearing cap and pull the piston and connecting rod upward.

Note

Warm the piston to approximately 60 °C (140 °F) if it is difficult to move the piston pin.

- Remove the locking ring from the eye of the piston bolt.
- Remove the piston pin using the Pilot Drift - VW222A- .

Installing

Install in reverse order of removal. Note the following:

Note

- *Replace the bolts were tightened with an additional turn.*
- *Arrow on piston face points toward belt pulley side.*
- *Offset the piston ring gap by 120°.*

- Coat the contact surfaces on the bearing shells with oil.
- Install the piston with a piston ring compressor. Pay attention to the installed position -item 8- ⇒ Item 8 (page 78) .
- Install the connecting rod bearing cap. Pay attention to the installed position -item 2- ⇒ Item 2 (page 77) .
- Install the cylinder head. Refer to ⇒ “1.3 Cylinder Head, Removing and Installing”, page 94 .
- Install the oil pan upper section. Refer to ⇒ “1.4 Oil Pan Upper Section, Removing and Installing”, page 185 .

Protected by copyright. Copying for private or commercial purposes, in part or in whole, is not permitted unless authorised by Volkswagen AG. Volkswagen AG does not guarantee or accept any liability with respect to the correctness of information in this document. Copyright by Volkswagen AG.

Tightening Specifications

- Refer to
  ⇒ "5.1 Overview - Piston and Connecting Rod", page 77 .

5.3 Pistons and Cylinder Bore, Checking

⇒ "5.3.1 Pistons and Cylinder Bore, Checking, Engine Codes CXBA, CXBB, CNSA and CNSB", page 80

⇒ "5.3.2 Piston and Cylinder Bore, Checking, Engine Codes CNTA, CXCA, CXCB", page 82

5.3.1 Pistons and Cylinder Bore, Checking, Engine Codes CXBA, CXBB, CNSA and CNSB

Pistons, Checking

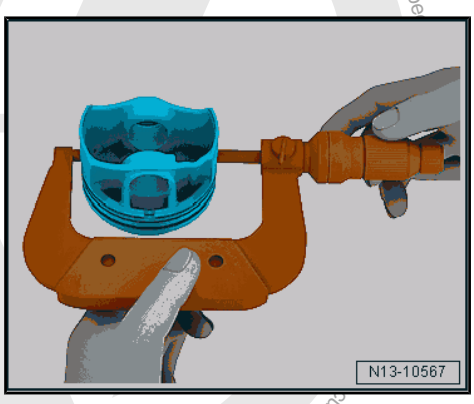

Special tools and workshop equipment required

- Outside Micrometer - 75-100mm - VAS6071-

– Measure approximately 15 mm in from the lower edge at a 90° angle to the piston pin axis using a micrometer.

- Deviation from specified size: maximum 0.04 mm

Basic Dimension	Piston Diameter
in mm	82.465 [1)]
• [1)] Measurements without graphite coating (thickness = 0.02 mm). The graphite coating wears off.	

Checking Piston Ring Gap

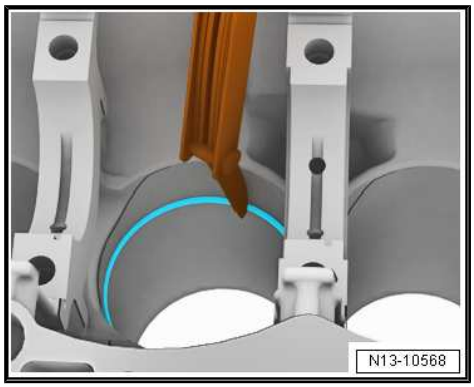

Special tools and workshop equipment required

- Feeler Gauge

– Push piston ring squarely from above down to approximately 15 mm from bottom end of cylinder. To do this use a piston without rings.

Piston Ring Dimensions in mm	New	Wear Limit
Compression ring	0.20 to 0.40	0.80
Oil scraping ring	0.25 to 0.50	0.80

Protected by copyright. Copying for private or commercial purposes, in part or in whole, is not permitted unless authorised by Volkswagen AG. Volkswagen AG does not guarantee or accept any liability with respe
ument. Copyright by Volkswagen AG.

Piston Ring Groove Clearance, Checking

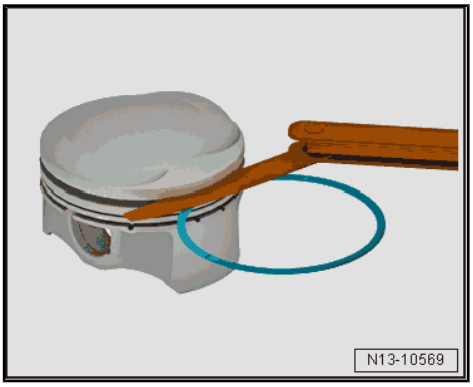

Special tools and workshop equipment required

- ♦ Feeler Gauge
- – Clean the piston ring groove before checking.

Piston Ring Dimensions in mm	New	Wear Limit
1st Compression ring	0.06 to 0.09	0.20
2nd Compression ring	0.03 to 0.06	0.15
Oil scraping rings	Cannot be measured	

Check Cylinder Bore

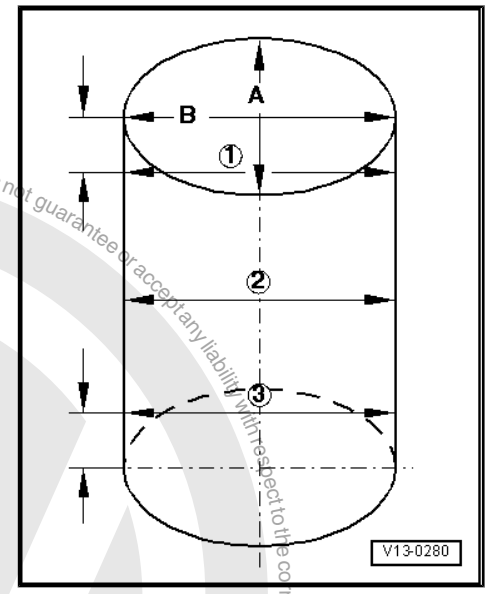

Special tools and workshop equipment required

- ♦ Cylinder Dial Bore Gauge - VAS6078-

NOTICE

Risk of damaging the cylinder bore surface through incorrect handling.

- – **Never handle the cylinder bore with service equipment (drilling, honing, grinding).**

- – Using a Cylinder Dial Bore Gauge - VAS6078- measure in a diagonal sequence at three positions transversely -A- and longitudinally -B-.
- ♦ Deviation from specified size: maximum 0.08 mm

Copyright by Volkswagen AG. Volkswagen AG does not guarantee or accept any liability with respect to the correctness of information in this document. Copyright by Volkswagen AG. Reproduction, in part or in whole, is not permitted unless authorised by Volkswagen AG.

Basic Dimension	Cylinder Bore Diameter
in mm	82.51

Note

The cylinder bore must not be measured when the cylinder block is mounted on the Engine and Transmission Holder - VAS6095- because the measurements may be incorrect.

5.3.2 Piston and Cylinder Bore, Checking, Engine Codes CNTA, CXCA, CXCB

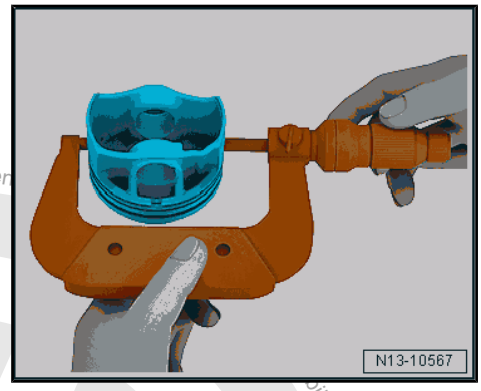

Pistons, Checking

Protected by copyright. Copying for private or commercial purposes, in part or in whole, is not permitted unless authorised by Volkswagen AG. Volkswagen AG does not guarantee or accept any liability with respect to the correctness of information

Special tools and workshop equipment required

- ♦ Outside Micrometer - 75-100mm - VAS6071-
- – Measure approximately 15 mm in from the lower edge at a 90° angle to the piston pin axis using a micrometer.
- ♦ Deviation from specified size: maximum 0.04 mm

Basic Dimension	Piston Diameter
in mm	82.42 [1]
• [1] Measurements without graphite coating (thickness = 0.02 mm). The graphite coating wears off.	

Checking Piston Ring Gap

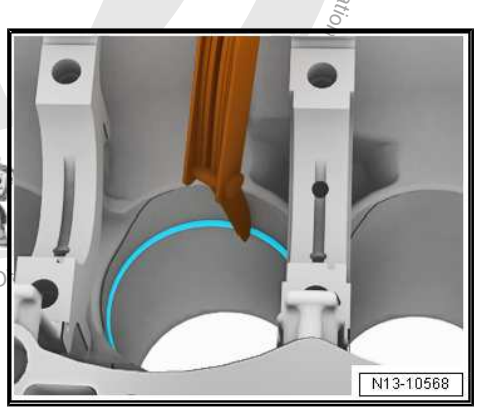

Special tools and workshop equipment required

- ♦ Feeler Gauge
- – Push piston ring squarely from above down to approximately 15 mm from bottom end of cylinder. To do this use a piston without rings.

Piston Ring Dimensions in mm	New	Wear Limit
1st Compression ring	0.30 to 0.40	0.80

Piston Ring Dimensions in mm	New	Wear Limit
2nd Compression ring	0.40 to 0.50	0.80
Oil scraping ring	0.20 to 0.40	0.80

Piston Ring Groove Clearance, Checking

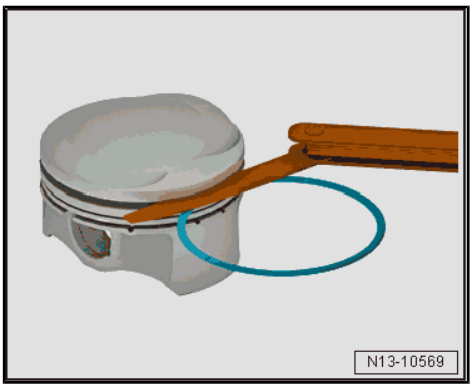

Special tools and workshop equipment required

- ♦ Feeler Gauge
- – Clean the piston ring groove before checking.

Piston Ring Dimensions in mm	New	Wear Limit
1st Compression ring	0.06 to 0.09	0.20
2nd Compression ring	0.03 to 0.06	0.15
Oil scraping rings	Cannot be measured	

Check Cylinder Bore

Note

The cylinder bore must not be measured when the cylinder block is mounted on the Engine and Transmission Holder - VAS6095- because the measurements may be incorrect.

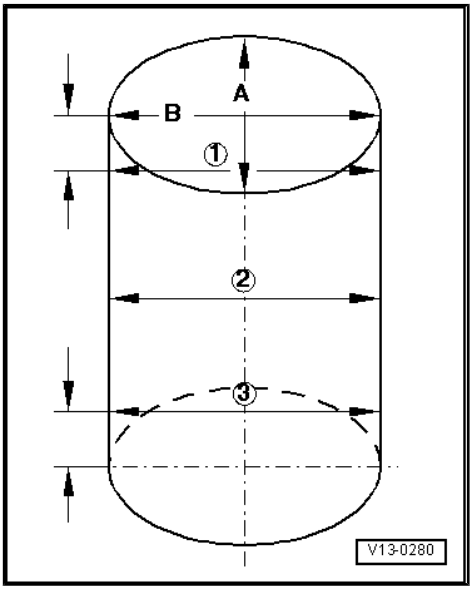

Special tools and workshop equipment required

- ♦ Cylinder Dial Bore Gauge - VAS6078-

NOTICE

Risk of damaging the cylinder bore surface through incorrect handling.

- – **Never handle the cylinder bore with service equipment (drilling, honing, grinding).**

Protected by copyright. Copying for private or commercial purposes, in part or in whole, is not permitted unless authorised by Volkswagen AG. Volkswagen AG does not guarantee or accept any liability with respect to the correctness of information in this document. Copyright by Volkswagen AG.

– Using a Cylinder Dial Bore Gauge - VAS6078- measure in a diagonal sequence at three positions transversely -A- and longitudinally -B-.

♦ Deviation from specified size: maximum 0.08 mm

Basic Dimension	Cylinder Bore Diameter
in mm	82.51

5.4 New Connecting Rod, Separating

New connecting rods might not be separated at the location where they should be. If the connecting rod bearing cap cannot be removed by hand, proceed as follows:

– Label which cylinder goes with the connecting rod -item 11- ⇒ Item 11 (page 78) .

– Lightly clamp the connecting rod in a vise equipped with aluminum protective pads.

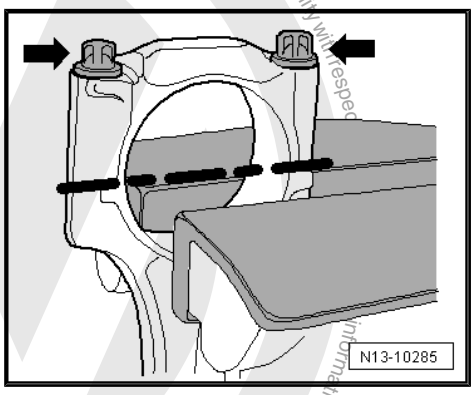

Note

♦ *Clamp the connecting rod lightly to prevent damaging it.*

♦ *Clamp the connecting rod below the dotted line.*

– Loosen the bolts -arrows- approximately 5 turns.

– Carefully tap against the connecting rod bearing cap in direction of -arrow- with a plastic hammer until the cap is loose.

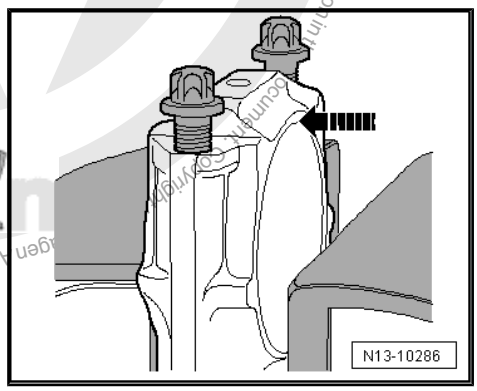

5.5 Connecting Rods, Checking Radial Clearance

Special tools and workshop equipment required

♦ Plastigage®

Caution

This procedure contains mandatory replaceable parts. Refer to component overview prior to starting procedure.

Mandatory Replacement Parts

♦ Bolts - Connecting Rod

Procedure

– Remove the connecting rod bearing cap.

Protected by copyright. Copying for private or commercial purposes, in part or in whole, is not permitted unless authorised by Volkswagen AG. Volkswagen AG does not guarantee or accept any liability with respect to the correctness of information in this document. Copyright by Volkswagen AG.

– Clean the bearing cap and journal.

– Place the Plastigage® over the entire width of the bearing journal or into the bearing shells.

– Position the connecting rod bearing cap and tighten the old bolts -item 1- ⇒ Item 1 (page 77) without turning the crankshaft.

– Install the connecting rod bearing cap.

– Compare width of Plastigage® with calibrated scale.

Radial clearance:

- New: 0.02 to 0.06 mm.
- Wear limit: 0.09 mm.

– Replace connecting rod bolts.

Protected by copyright. Copying for private or commercial purposes, in part or in whole, is not permitted unless authorised by Volkswagen AG. Volkswagen AG does not guarantee or accept any liability with respect to the correctness of information in this document. Copyright by Volkswagen AG.

6 Special Tools

Special tools and workshop equipment required

- Locking Pin - T10060A-

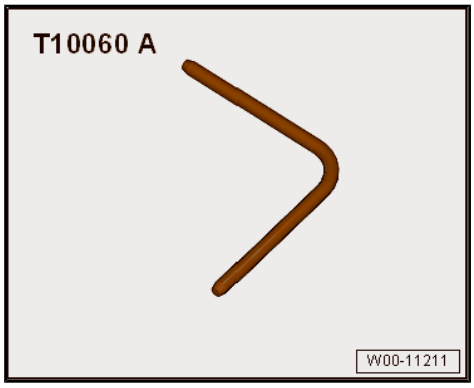

- Seal Installer, Intermediate Shaft - T10356/1-

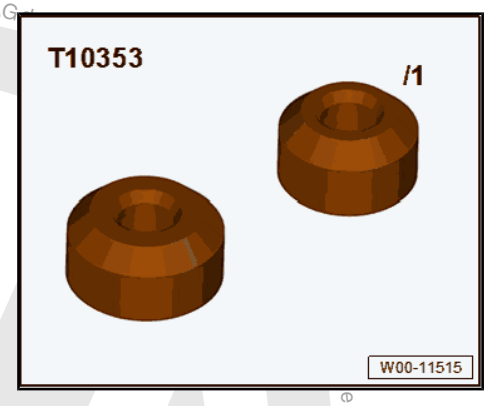

- Counterhold - Vibration Damper - T10355-

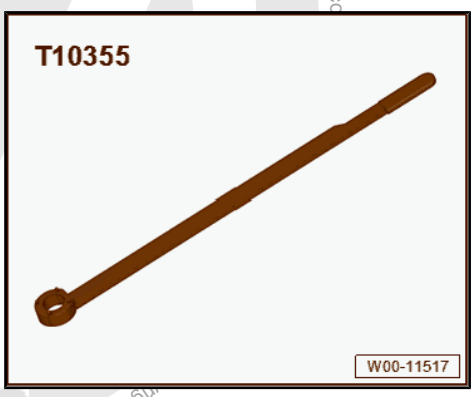

- Assembly Tool - T10531-

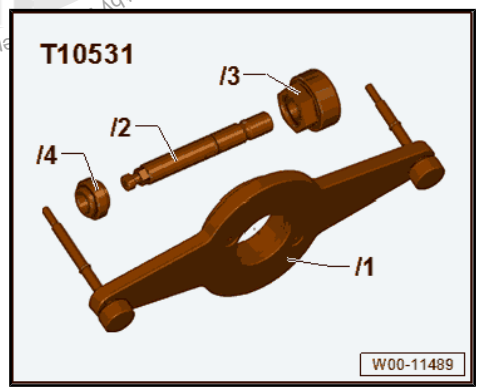

Protected by copyright. Copying for private or commercial purposes, in part or in whole, is not permitted unless authorised by Volkswagen AG. Volkswagen AG

- Seal Installer - Sealing Flange Guide Sleeve - T20097-

- Dial Gauge - 0-10mm - VAS6079-

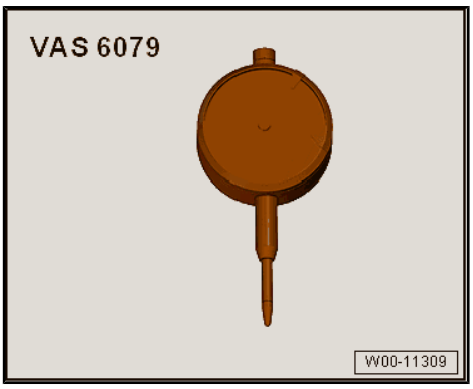

- Shop Crane - Drip Tray - VAS6208-

- Bearing Installer - Bearing Press Piece - VW207C-

Protected by copyright. Copying for private or commercial purposes, in part or in whole, is not permitted unless authorised by Volkswagen AG. Volkswagen AG d
s document. Copyright by Volkswagen AG.

- Pilot Drift - VW222A-

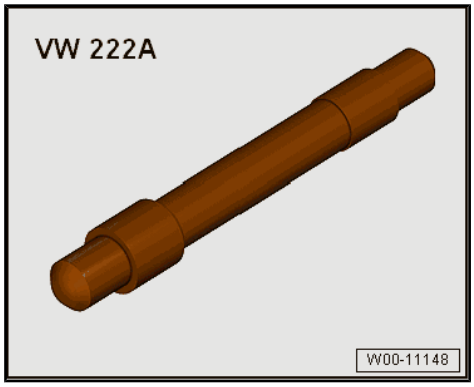

- Dial Gauge Holder - VW387-

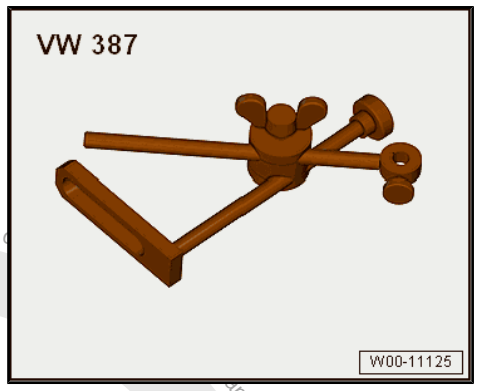

- Internal puller, for example Puller - Kukko Internal - 14-19mm - 21/2-

- Counter-support for example Puller - Kukko Counterstay - 22/1-

Protected by copyright. Copying for private or commercial purposes, in part or in whole, is not permitted unless authorised by Volkswagen AG. Volkswagen AG

- Flywheel Retainer - 3067-

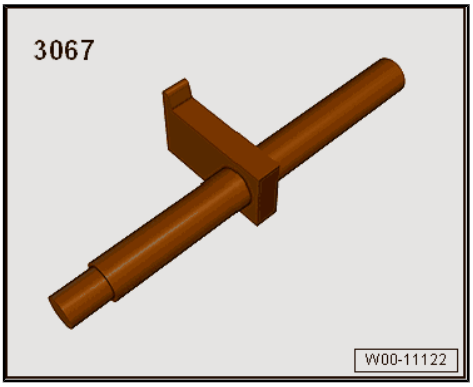

- Engine Support Bridge - Spindle - 10-222A/11-
- Plastigage®

Individual components of the Assembly Tool - T10531- :

- Counterhold Tool - T10531/1-
- Tensioning Pins - T10531/2-
- Turning Over Tool - T10531/3-
- Collar Nut - T10531/4-

Protected by copyright. Copying for private or commercial purposes, in part or in whole, is not permitted unless authorised by Volkswagen AG. Volkswagen AG does not guarantee or accept any liability with respect to the correctness of information in this document. Copyright by Volkswagen AG.

15 – Cylinder Head, Valvetrain

1 Cylinder Head

⇒ “1.1 Overview - Cylinder Head”, page 90 .
⇒ “1.2 Overview - Camshaft Housing”, page 93 .
⇒ “1.3 Cylinder Head, Removing and Installing”, page 94 .
⇒ “1.4 Vacuum Pump, Removing and Installing”, page 100 .
⇒ “1.5 Compression Pressure, Checking”, page 101 .

1.1 Overview - Cylinder Head

Note

- *Replace the cylinder head bolt.*
- *Always replace self-locking nuts, bolts which have been tightened to tightening specifications as well as gaskets and O-rings.*
- *The plastic protectors installed to protect the open valves must only be removed immediately before mounting the cylinder head.*
- *The engine oil and the coolant must be changed if the cylinder head or the cylinder head gasket are being replaced.*

Protected by copyright. Copying for private or commercial purposes, in part or in whole, is not permitted unless authorised by Volkswagen AG. Volkswagen AG does not guarantee or accept any liability with respect to the correctness of information in this document. Copyright by Volkswagen AG.

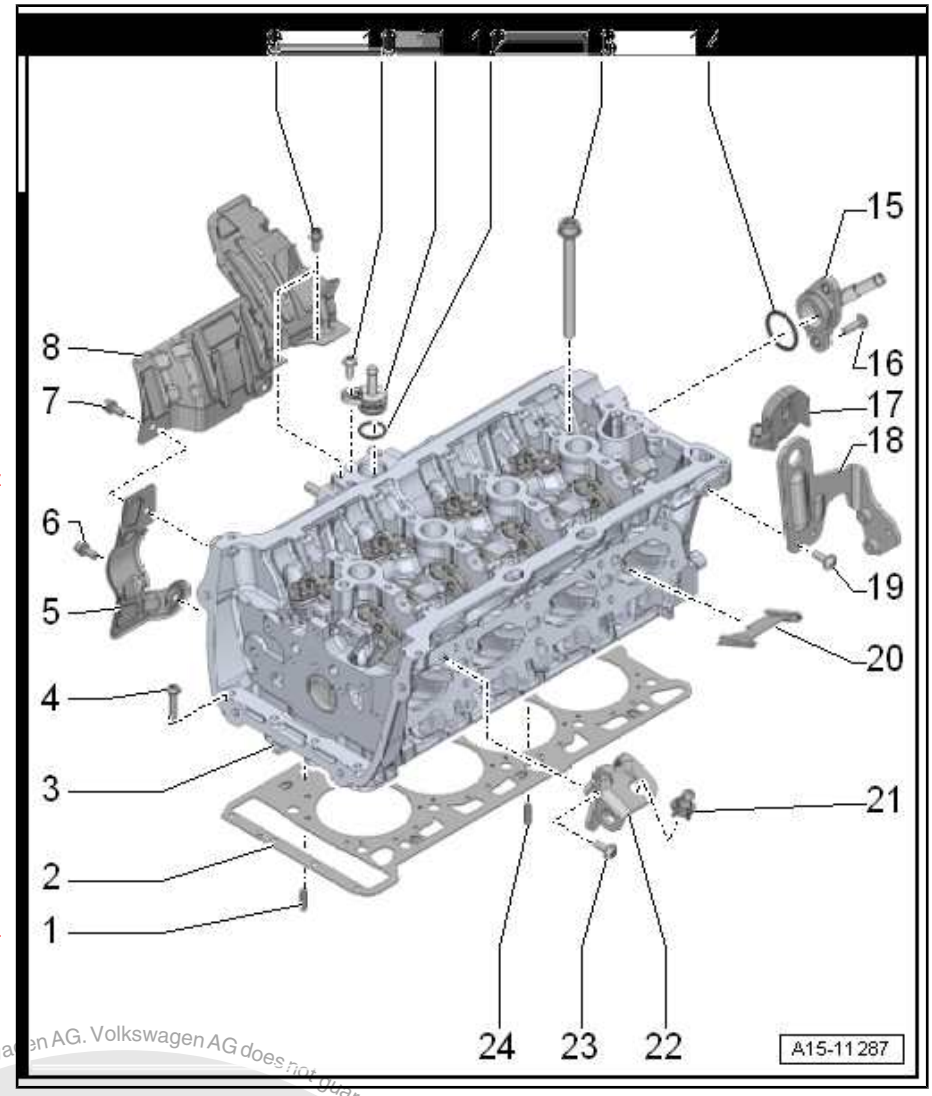

1 - Alignment Pin

2 - Cylinder Head Gasket

- ❑ Replace after removing
- ❑ Installed position: the part number faces the cylinder head

3 - Cylinder Head

- ❑ Removing and installing. Refer to ⇒ "1.3 Cylinder Head, Removing and Installing", page 94 .
- ❑ Check for distortion. Refer to ⇒ Fig. ""Checking Cylinder Head for Distortion"" , page 93

4 - Bolt

- ❑ 4 Nm + 90°
- ❑ Follow the procedure when loosening. Refer to ⇒ Fig. ""Loosening Cylinder Head"" , page 92
- ❑ Follow the procedure when tightening. Refer to ⇒ Fig. ""Cylinder Head Tightening Sequence"" , page 92
- ❑ Replace after removing

5 - Heat Shield

6 - Bolt

- ❑ 9 Nm

7 - Bolt

- ❑ 9 Nm

8 - Heat Shield

9 - Bolt

- ❑ 9 Nm

10 - Bolt

- ❑ 9 Nm

11 - Connection

- ❑ For coolant hose

12 - O-Ring

- ❑ Coat with coolant
- ❑ Replace after removing

13 - Cylinder Head Bolt

- ❑ Follow the procedure when loosening. Refer to ⇒ Fig. ""Loosening Cylinder Head"" , page 92
- ❑ Follow the procedure when tightening. Refer to ⇒ Fig. ""Cylinder Head Tightening Sequence"" , page 92
- ❑ Replace after removing

Protected by copyright. Copying for private or commercial purposes, in part or in whole, is not permitted unless authorised by Volkswagen AG. Volkswagen AG does not guarantee or accept any liability with respect to the correctness of information in this document. Copyright by Volkswagen AG.

14 - O-Ring
- ❑ Coat with coolant
- ❑ Replace after removing

15 - Connection
- ❑ For coolant hose

16 - Bolt
- ❑ 9 Nm

17 - Mount
- ❑ For engine cover

18 - Engine Lifting Eye

19 - Bolt
- ❑ 8 Nm + 90° turn
- ❑ Replace after removing

20 - Partition Plate

21 - Ball Pin
- ❑ For engine cover

22 - Engine Lifting Eye

23 - Bolt
- ❑ 8 Nm + 90° turn
- ❑ Replace after removing

24 - Alignment Pin

Loosening Cylinder Head

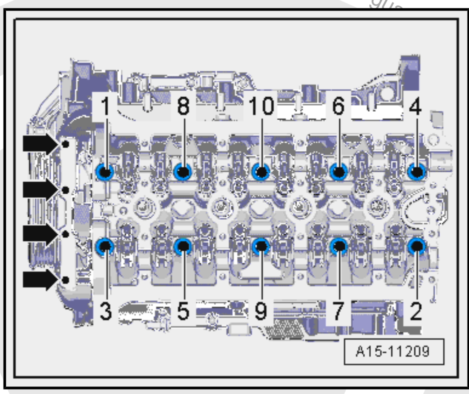

– Remove the bolts -arrows-.

– Loosen the cylinder head bolts in the sequence -1 to 10-.

Cylinder Head Tightening Sequence

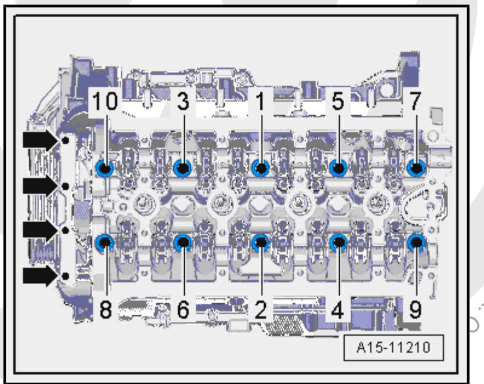

– Tighten the cylinder head bolts in the sequence -1 to 10- as follows.

Step	Bolts	Tightening Specification/Additional Turn
1.	-1- through -10-	40 Nm
2.	-1- through -10-	Turn an additional 90°.
3.	-1- through -10-	Turn an additional 90°.
4.	Bolts -arrows-	4 Nm
5.	Bolts -arrows-	Turn an additional 90°.

Protected by copyright. Copying for private or commercial purposes, in part or in whole, is not permitted unless authorised by Volkswagen AG. Volkswagen AG does not guarantee or accept any liability with respect to the correctness of information in this document. Copyright by Volkswagen AG.

Checking Cylinder Head for Distortion

– Check the cylinder head at several locations for distortion using a Straight Edge - 500mm - VAS6075- and a feeler gauge.

♦ Maximum permissible distortion: 0.05 mm

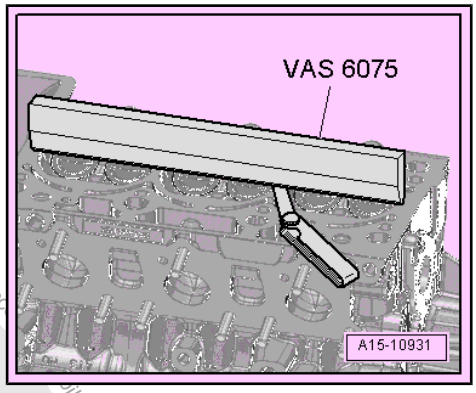

Protected by copyright. Copying for commercial purposes, in part or in whole, is not permitted unless authorised by Volkswagen AG. Volkswagen AG does not guarantee or accept any liability with respect to the correctness

1.2 Overview - Camshaft Housing

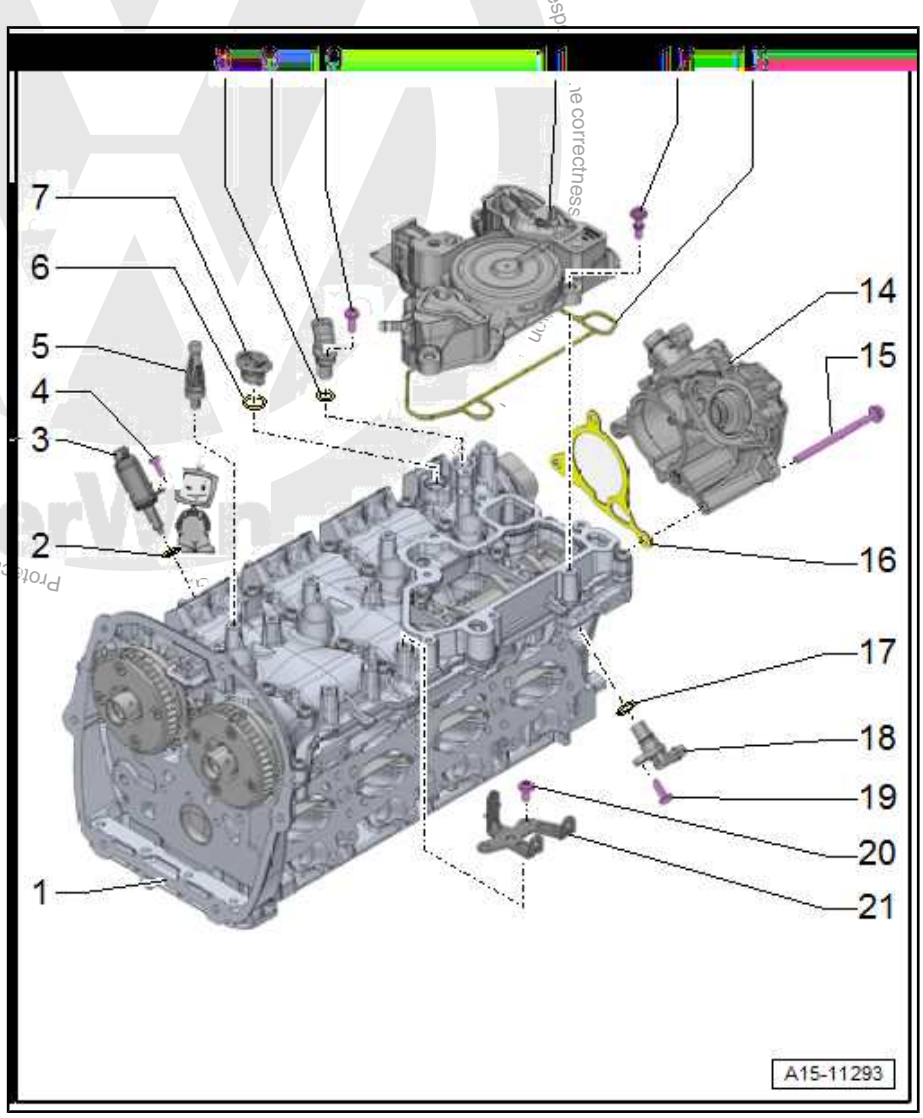

1 - Cylinder Head

2 - O-Ring

- ❑ Only installed on vehicles with the engine codes CNTA, CXCA, CXCB
- ❑ Replace after removing
- ❑ Coat with engine oil

3 - Cam Adjustment Actuator

- ❑ Only installed on vehicles with the engine codes CNTA, CXCA, CXCB

4 - Bolt

- ❑ 5 Nm
- ❑ Only installed on vehicles with the engine codes CNTA, CXCA, CXCB

5 - Ball Pin

- ❑ 9 Nm
- ❑ For engine cover

6 - O-Ring

- ❑ Replace after removing
- ❑ Coat with engine oil

7 - Plug

8 - O-Ring

- ❑ Replace after removing
- ❑ Coat with engine oil

9 - Camshaft Position Sensor 3 - G300-

- ❑ Overview. Refer to ⇒ “1.1 Overview - Ignition System”, page 356 .

10 - Bolt

- ❑ Tightening specification. Refer to ⇒ “1.1 Overview - Ignition System”, page 356 .

11 - Oil Separator

- ❑ Removing and installing. Refer to ⇒ “3.2 Oil Separator, Removing and Installing”, page 196 .

Protected by copyright. Copyright by Volkswagen AG. Volkswagen AG does not guarantee or accept any liability with respect to the correctness of information in this document. Copying for private or commercial purposes, in part or in whole, is not permitted unless authorised by Volkswagen AG.

12 - Bolt

- ❑ Tightening specification and sequence. Refer to ⇒ Fig. ""Vacuum Pump - Tightening Specifications"" , page 94 .

13 - Seal

- ❑ Replace after removing

14 - Vacuum Pump

- ❑ Removing and installing. Refer to ⇒ "1.4 Vacuum Pump, Removing and Installing", page 100 .

15 - Bolt

- ❑ Tightening specification. Refer to ⇒ Fig. ""Vacuum Pump - Tightening Specifications"" , page 94 .

16 - Seal

- ❑ Replace after removing

17 - O-Ring

- ❑ Replace after removing
- ❑ Coat with engine oil

18 - Camshaft Position Sensor - G40-

- ❑ Overview. Refer to ⇒ "1.1 Overview - Ignition System", page 356 .

19 - Bolt

- ❑ Tightening specification. Refer to ⇒ "1.1 Overview - Ignition System", page 356 .

20 - Bolt

- ❑ 9 Nm

21 - Bracket

- ❑ For EVAP Canister Purge Regulator Valve 1 - N80-

Vacuum Pump - Tightening Specifications

Tighten with a new bolts as follows:

Step	Bolts	Tightening Specification/Additional Turn
1.	-1- through -3-	Install hand-tight
2.	-1- through -3-	8 Nm
3.	-1- through -3-	180° additional turn

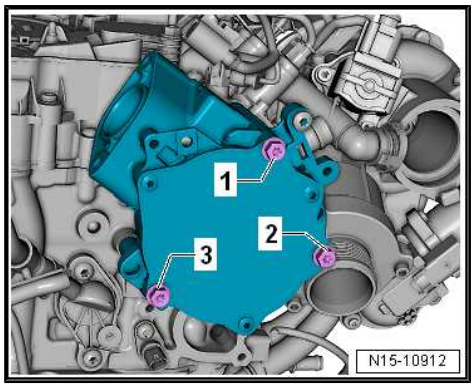

1.3 Cylinder Head, Removing and Installing

Special tools and workshop equipment required

- ♦ Engine Bung Set - VAS6122-
- ♦ Engine Support Bridge - 10-222A-

Removing

> **Caution**
>
> *This procedure contains mandatory replaceable parts. Refer to component overview prior to starting procedure.*

Mandatory Replacement Parts

- ♦ Nuts - Turbocharger to Engine

- Seal - Turbocharger to Engine
- Bolts - Cylinder Head
- Gasket - Cylinder Head

Note

- *Before installing the cylinder head the engine support and the engine mount are temporarily re-installed because the eyes from the engine support bridge are secure on the cylinder head.*
- *When installing, secure all cable ties back to the same positions.*
- *Close the open channels from the intake and exhaust tract with suitable plugs from the Engine Bung Set - VAS6122- .*

– Remove the camshafts. Refer to
⇒ “4.2 Camshaft, Removing and Installing”, page 136 .

– Reinstall the engine support and engine mount and tighten the bolts hand-tight.

– Disengage the Engine Support Bridge - 10-222A- spindles.

– Drain the coolant. Refer to
⇒ “1.3 Coolant, Draining and Filling”, page 217 .

– Remove front exhaust pipe with catalytic converter. Refer to
⇒ “2.2 Catalytic Converter, Removing and Installing”, page 349 .

– Remove the Oxygen Sensor 1 before Catalytic Converter - GX10- . Refer to
⇒ “8.2 Oxygen Sensor 1 before Catalytic Converter GX10 , Removing and Installing”, page 333 .

– Remove the left and right bolts -arrow-.

– Unclip the air guide lower section -1- and remove.

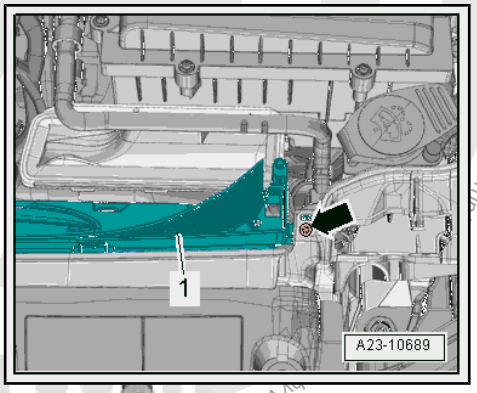

– Loosen the hose clamp -2-, remove the air duct hose from the charge air cooler.

– Seal the open lines and connections with clean plugs from the Engine Bung Set - VAS6122- .

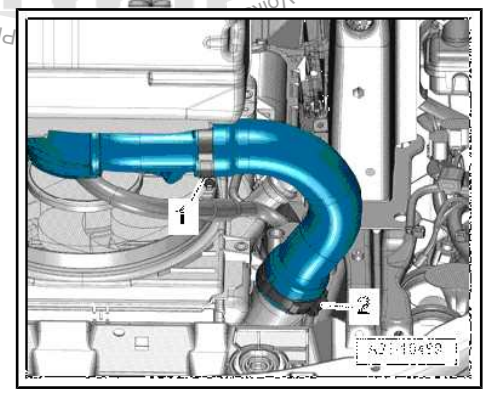

Protected by copyright. Copying for private or commercial purposes, in part or in whole, is not permitted unless authorised by Volkswagen AG. Volkswagen AG does not guarantee or accept any liability with respect to the correctness of information.

– Loosen the hose clamp -2-.
– Free up the coolant hose -3-.
– Remove the bolts -arrows-.
– Disconnect the connector -1- from the Charge Air Pressure Sensor - G31- , and remove the right air guide pipe.

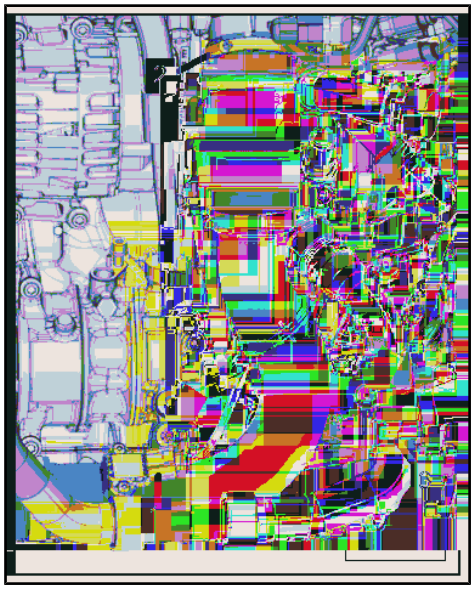

– Loosen the clamps -arrows- and remove the coolant hoses.
– Swing the coolant line -1- to the side.

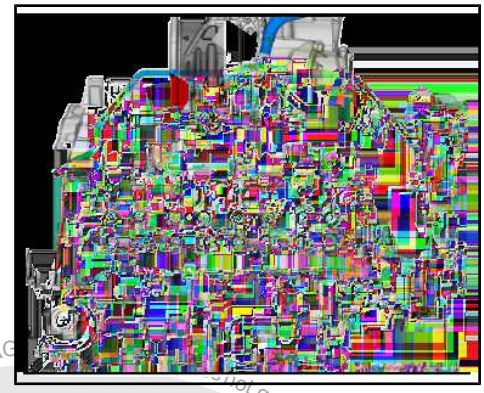

– Disconnect the connectors:

1 - For Oil Pressure Switch - F22-

2 - For Reduced Oil Pressure Switch - F378-

5 - For Piston Cooling Nozzle Control Valve - N522-

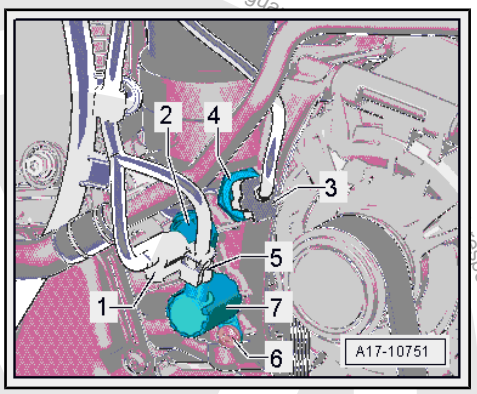

– Remove the bolts -arrows-.

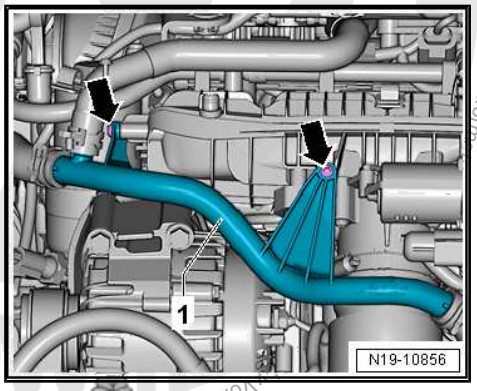

Protected by copyright. Copying for private or commercial purposes, in part or in whole, is not permitted unless authorised by Volkswagen AG. Volkswagen AG

– Remove the bolt -1- and the nut -3- and then remove the bracket -2- for the intake manifold.

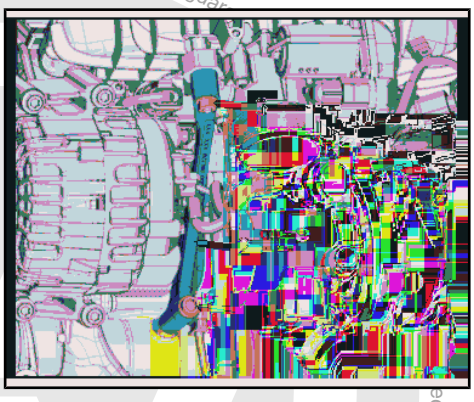

– Disconnect the connectors:

1 - For Throttle Valve Control Module - GX3-

2 - For Intake Manifold Sensor - GX9-

3 - For Fuel Pressure Sensor - G247-

– Remove the connector -4- from the bracket.

– Free up the wiring harness and push it to the side.

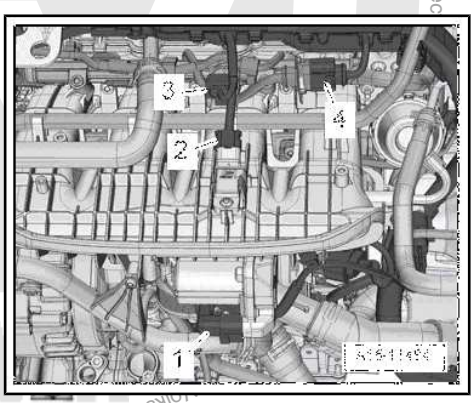

– Free up the wiring harness -1 and 2- from the air guide pipe.

– Loosen the screw-type clamp -3-.

– Remove the bolts -arrows-.

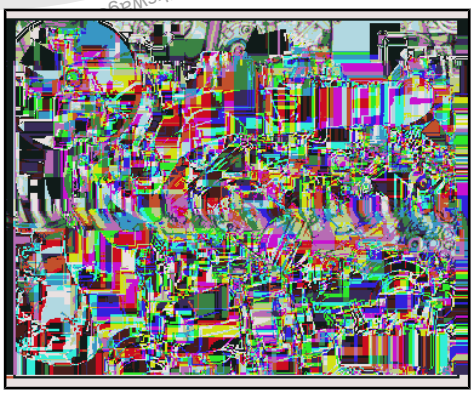

– Loosen the hose clamp -arrow- and remove the charge air hose -1- with the air guide pipe downward.

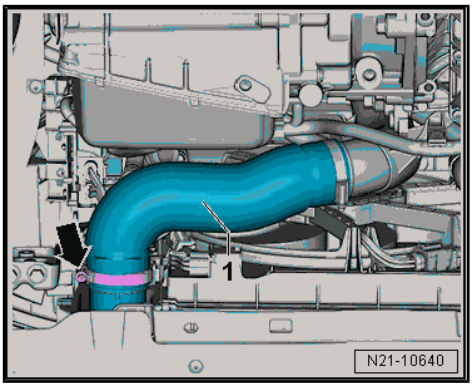

Protected by copyright. Copying for private or commercial purposes, in part or in whole, is not permitted unless authorised by Volkswagen AG. Volkswagen AG does not guarantee

– Disconnect the connector -3- for Knock Sensor 1 - G61- from the bracket.

– Disconnect the connectors -2 through 4-.

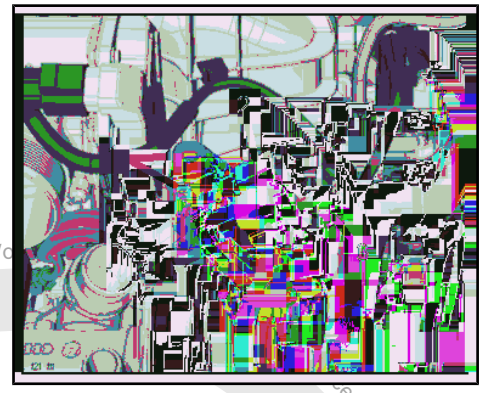

– Disconnect the connectors and free up the wires.

1 - For Intake Manifold Runner Control Valve - N316-

2 - For Coolant Shut-Off Valve - N82-

3 - For Engine Coolant Temperature Sensor - G62-

4 - For Oil Pressure Switch, Level 3 - F447-

– Remove the bolts -arrows-.

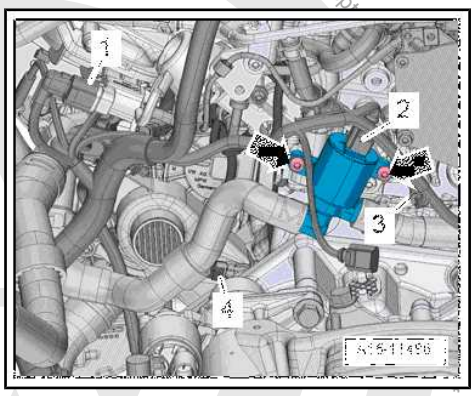

– Remove the bolts -arrows- and nut -1-.

– Remove the heat shield -2-.

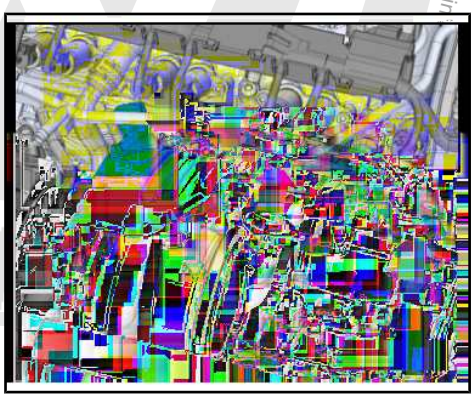

– Remove the bolt -1-. Just loosen bolt -3-.

– Remove the turbocharger bracket -2-.

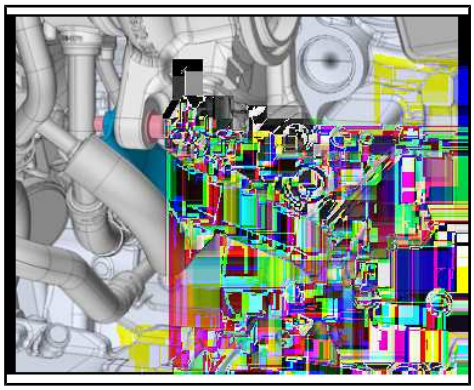

Protected by copyright. Copying for private or commercial purposes, in part or in whole, is not permitted unless authorised by Volkswagen AG. Vo

– Remove the nuts -arrows-.

– Remove the turbocharger from the cylinder head and tie up behind.

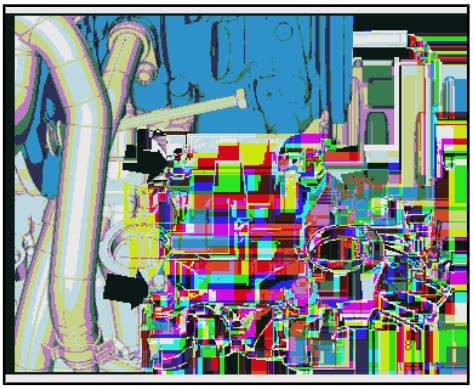

– Remove the bolts -arrows-.

– Remove the cylinder head bolts in the sequence -1 to 10-.

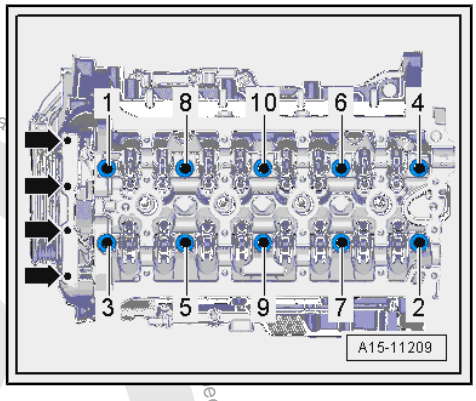

Note

Make sure all wires and cables are disconnected.

– Remove the cylinder head and place it on a soft surface (foam).

Installing

Note

- *Replace the bolts that were tightened with an additional turn.*
- *Replace the gaskets, seals and self-locking nuts.*
- *The hose supports, air guide pipes and hoses must be free of oil and grease before installing.*
- *Secure hose connections with standard production clamps. Refer to the Parts Catalog.*
- *The screws on the used clamps must be sprayed with a rust remover before installing.*

– Only unpack new cylinder head gasket immediately prior to installation. The silicon layer and the cylinder head seal recessed area must not be damaged.

– Carefully remove sealant residue from cylinder head and cylinder block. Make sure that no long scrapes or scratches result. Carefully remove all grinding and sanding residue.

– Clean the cylinder head bolt blind holes. If necessary with compressed air.

– Set cylinder head gasket in place.

Protected by copyright. Copying for private or commercial purposes, in part or in whole, is not permitted unless authorised by Volkswagen AG. Volkswagen AG does not guarantee the correctness of information in this document. Copyright by Volkswagen AG.

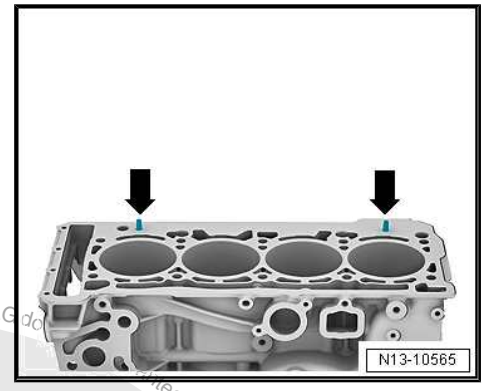

- ♦ Pay attention to centering pins in cylinder block -arrows-.
- ♦ Cylinder head gasket installed position: the part number must be readable from the intake side.

– If the crankshaft was turned in the meanwhile: bring the piston for cylinder 1 to Top Dead Center (TDC) and then turn the crankshaft back just a little. Take care not to damage the timing chain in the process.

– Set cylinder head in place.

– Install and tighten the cylinder head bolt. Tightening sequence. Refer to
⇒ Fig. ""Cylinder Head Tightening Sequence"" , page 92

– Install the camshaft but the camshaft timing chain is not installed yet. Refer to
⇒ "4.2 Camshaft, Removing and Installing", page 136 .

– Support the engine in its installed position again. Refer to
⇒ "2.5 Engine, Supporting in Installed Position", page 33 .

– Remove the engine mount and the engine support. Refer to
⇒ "1.6 Engine Support, Removing and Installing", page 55 .

– Now install the camshaft timing chain. Refer to
⇒ "4.2 Camshaft, Removing and Installing", page 136 .

Further assembly is performed in the reverse order of removal, thereby observing the following:

– Replace the engine oil. Refer to ⇒ Maintenance ; Booklet 36.1 ; Procedure Descriptions; Engine Oil, Draining, Replacing Oil Filter, and Filling.

– Fill with new coolant. Refer to
⇒ "1.3 Coolant, Draining and Filling", page 217 .

Tightening Specifications

- ♦ Refer to ⇒ "1.1 Overview - Cylinder Head", page 90 .
- ♦ Refer to ⇒ "4.1 Overview - Intake Manifold", page 296 .
- ♦ Refer to ⇒ "3.1 Overview - Coolant Pipes", page 241 .
- ♦ Refer to ⇒ "1.1 Overview - Turbocharger", page 256 .
- ♦ Refer to ⇒ "1.1 Overview - Muffler", page 338 .

1.4 Vacuum Pump, Removing and Installing

Caution

This procedure contains mandatory replaceable parts. Refer to component overview prior to starting procedure.

Mandatory Replacement Parts

- ♦ Seal - Vacuum Pump

Removing

– Remove the engine cover. Refer to
⇒ "3.1 Engine Cover, Removing and Installing", page 38 .

– Remove the air filter housing. Refer to
⇒ "3.2 Air Filter Housing, Removing and Installing", page 294 .

Protected by copyright. Copyright by Volkswagen AG. Copyright by Volkswagen AG. Volkswagen AG does not guarantee or accept any liability with respect to the correctness of information in this document. Copyright by Volkswagen AG. Distribution and/or reproduction of this document or parts thereof is not permitted without the express authorisation of Volkswagen AG.

– Unclip the vacuum line -2- from the bracket -arrow-.

– Disconnect the vacuum hose -2-.

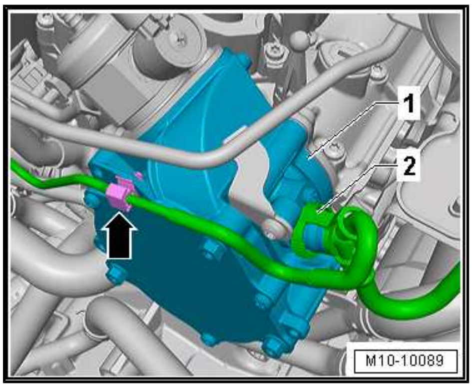

– Remove the bolts -1, 2 and 3- and carefully move the coolant line slightly to the side.

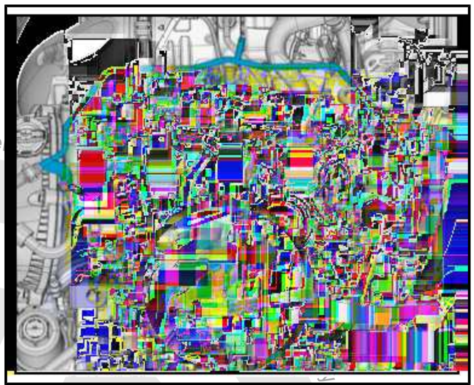

NOTICE

Risk of destroying the coolant pipes through deformation.

– Never change the coolant pipe bent shape.

– Remove the high pressure pump with the roller tappet. Refer to ⇒ “7.2 High Pressure Pump, Removing and Installing”, page 328 .

– Remove the bolts -arrows- and remove the vacuum pump.

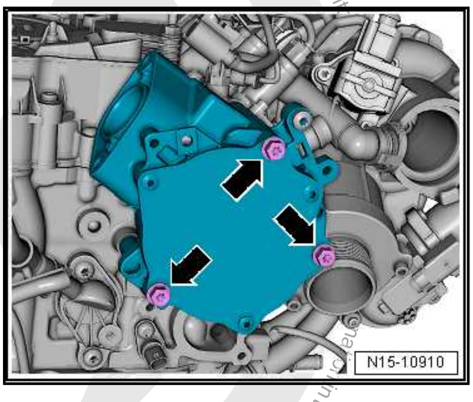

Note

Do not disassemble the vacuum pump.

Installing

– Clean the sealing surfaces.

– Turn the vacuum pump coupling plate so that it engages in the camshaft groove when installing the vacuum pump.

– Position the new seal on the vacuum pump and insert the two bolts. Position the vacuum pump with the seal on the cylinder head.

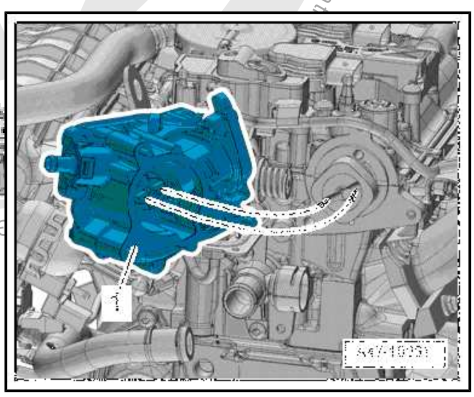

– While doing so pay attention that it lays flush on the flange.

Further assembly is performed the reverse order of the removal.

Tightening Specifications

♦ Refer to ⇒ Fig. ““Vacuum Pump - Tightening Specifications”“ , page 94

1.5 Compression Pressure, Checking

Special tools and workshop equipment required

♦ Spark Plug Removal Tool - 3122B-

- Compression Tester Kit - VAG1763-
- Compression Tester Kit - Adapter 1 - VAG1381/1-
- Compression Tester Kit - Adapter 5A - VAG1381/5A-

Test Sequence

Note

- *Engine oil temperature: minimum 30 °C (86 °F)*
- *Battery voltage at least 12.7 V*

– Remove the engine cover. Refer to ⇒ “3.1 Engine Cover, Removing and Installing”, page 38 .

– Disconnect the ignition coil sensors connectors and remove them from the ignition coils at the same time.

– Remove the ignition coil bolts and remove the ignition coils.

– Disconnect the connectors:

1 - For Fuel Injector -N30- to -N33-

2 - For Cylinder 1 Fuel Injector 2 - N532- to Cylinder 4 Fuel Injector 2 - N535-

– Remove spark plugs with Spark Plug Removal Tool - 3122B- .

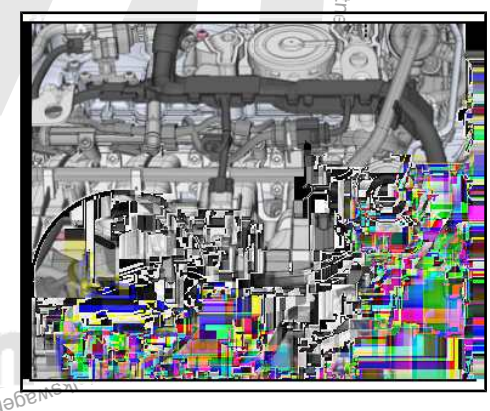

Protected by copyright. Copying for private or commercial purposes, in part or in whole, is not permitted unless authorised by Volkswagen AG. Volkswagen AG does not guarantee or accept any liability with respect to the correctness

– Check the compression pressure using the Compression Tester Kit - VAG1763- , Compression Tester Kit - Adapter 1 - VAG1381/1- and Compression Tester Kit - Adapter 5A - VAG1381/5A- .

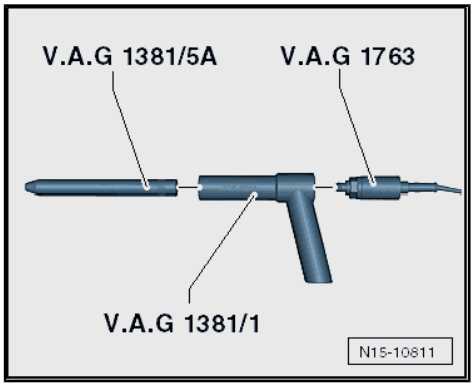

Note

For information on using the tester. Refer to the Operating Instructions.

– Operate the starter until the tester no longer indicates that the pressure is increasing.

Compression Pressure	Pressure
New	11.0 to 14.0 bar (159.54 to 203.05 psi)
Wear limit	7.0 bar (101.52 psi)
Maximum difference between cylinders	3.0 bar (43.5 psi)

– Install the spark plugs. Refer to ⇒ Maintenance ; Booklet 36.1 ; Procedure Descriptions; Spark Plugs, Replacing .

– Install the ignition coils. Refer to ⇒ "1.3 Ignition Coils with Power Output Stages, Removing and Installing", page 357 .

Note

By separating the connections, Diagnostic Trouble Code (DTCs) are stored to memory. After the test, check and erase the DTC memory.

– Turn on the ignition and select the following menu items on the Vehicle Diagnostic Tester :

◆ `01 - Engine Electronics`

◆ `Guided Functions`

◆ `01 - Generate Readiness Code`

Protected by copyright. Copyright for private or commercial purposes, in part or in whole, is not permitted without the prior written consent of Volkswagen AG. Volkswagen AG does not guarantee or accept any liability with respect to the correctness of information in this document. Copyright by Volkswagen AG.

2 Timing Chain Cover

⇒ “2.1 Overview - Timing Chain Cover”, page 104

⇒ “2.2 Timing Chain Cover, Removing and Installing”, page 106

⇒ “2.3 Vibration Damper Sealing Ring, Replacing”, page 112

2.1 Overview - Timing Chain Cover

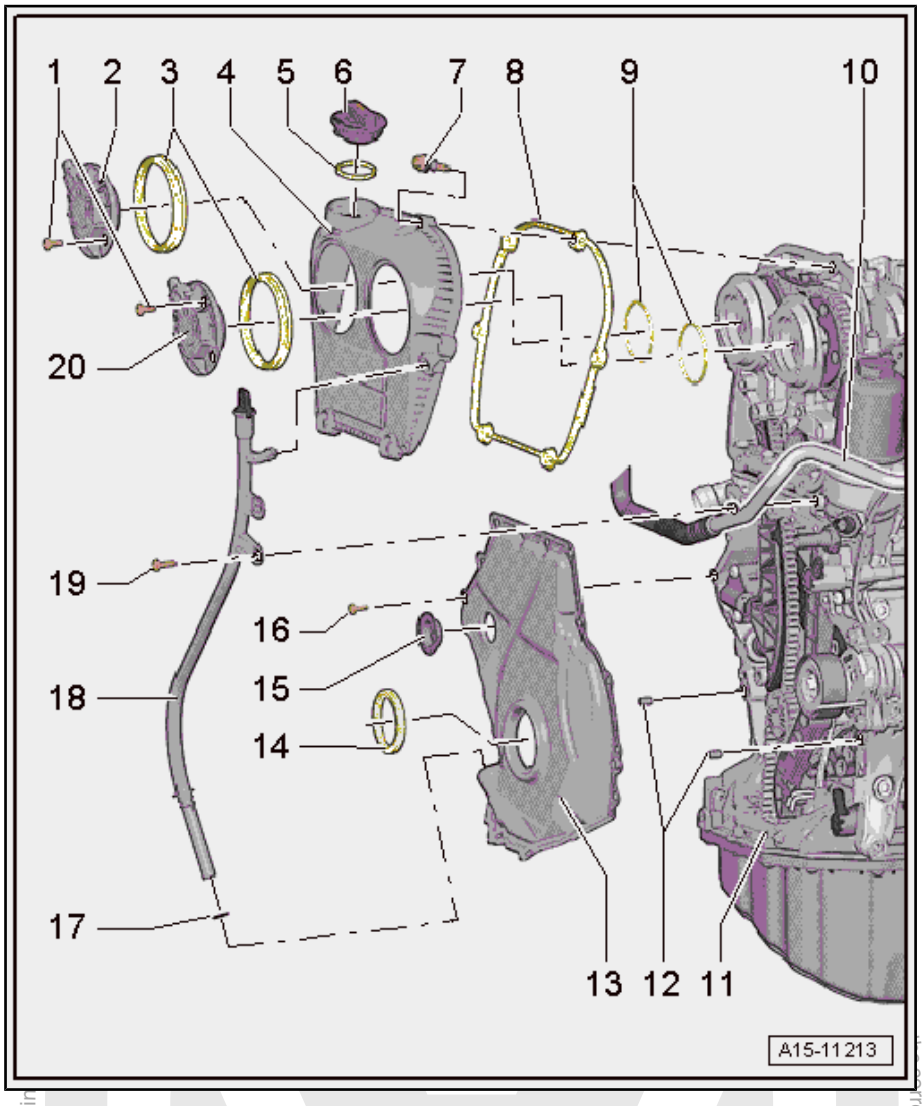

1 - Bolt
- ❑ 4 Nm + 45°
- ❑ Replace after removing

2 - Exhaust Camshaft Adjustment Valve 1 - N318-

3 - Seals
- ❑ To replace the cover must be removed.

4 - Timing Chain Cover Upper Section
- ❑ Removing and installing. Refer to ⇒ “2.2.1 Upper Timing Chain Cover, Removing and Installing”, page 106 .

5 - Seal
- ❑ Replace if damaged

6 - Cover

7 - Bolt
- ❑ Tightening sequence. Refer to ⇒ Fig. ““Timing Chain Guard Upper Cover - Tightening Sequence”“ , page 105

8 - Seal
- ❑ Replace if damaged

9 - O-Ring
- ❑ Replace after removing
- ❑ Coat with engine oil

10 - Not Installed

11 - Engine

12 - Alignment Pins
- ❑ Centering the cover

13 - Lower Timing Chain Cover
- ❑ With seal
- ❑ Replace after removing. Refer to ⇒ “2.2.2 Lower Timing Chain Cover, Removing and Installing”, page 108 .

14 - Shaft Seal
- ❑ For the vibration damper
- ❑ Replacing. Refer to ⇒ “2.3 Vibration Damper Sealing Ring, Replacing”, page 112 .

Protected by copyright. Copying for private or commercial purposes, in part or in whole, is not permitted unless authorized by Volkswagen AG. Copyright by Volkswagen AG. No liability for the correctness of information in this document.

15 - Plug

- ❑ Replace after removing

16 - Bolt

- ❑ Replace after removing
- ❑ Tightening sequence with 15 bolts. Refer to
  ⇒ Fig. ""Lower Cover for Timing Chain - Tightening Sequence for 15 Bolts"" , page 106
- ❑ Tightening sequence with 8 bolts. Refer to
  ⇒ Fig. ""Lower Cover For Timing Chain - Tightening Sequence for Eight Bolts"" , page 105

17 - O-Ring

- ❑ Replace after removing
- ❑ Coat with oil before installing

18 - Oil Dipstick Tube

19 - Bolt

- ❑ 9 Nm

20 - Camshaft Adjustment Valve 1 - N205-

- ❑ Removing and installing. Refer to
  ⇒ "4.4 Camshaft Adjustment Valve 1 N205 and Exhaust Camshaft Adjustment Valve 1 N318 , Removing and Installing", page 161 .

Protected by copyright. Copying for private or commercial purposes, in part or in whole, is not permitted unless authorised by Volkswagen AG. Volkswagen AG does not guarantee or accept any liability with respect to the correctness of information

Timing Chain Guard Upper Cover - Tightening Sequence

– Tighten the bolts -1 through 6- in the sequence shown:

1 - Bolts -1 through 6- Install by hand all the way

2 - Bolts -1 through 6- 9 Nm

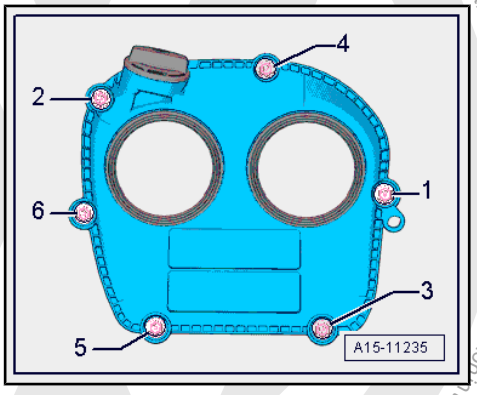

Lower Cover For Timing Chain - Tightening Sequence for Eight Bolts

Tighten the Steel Bolts -1 through 8- in Three Stages in the Sequence Shown:

1 - Bolts -1 through 8- 8 Nm

2 - Bolts -2 to 3 and 5 to 8- 45° additional turn

3 - Bolts -1 and 4- After installing the vibration damper tighten with an additional turn.

Tighten the Aluminum Bolts -1 through 8- in Three Stages in the Sequence Shown:

1 - Bolts -1 through 8- 4 Nm

2 - Bolts -2 to 3 and 5 to 8- 45° additional turn

3 - Bolts -1 and 4- After installing the vibration damper tighten with an additional turn.

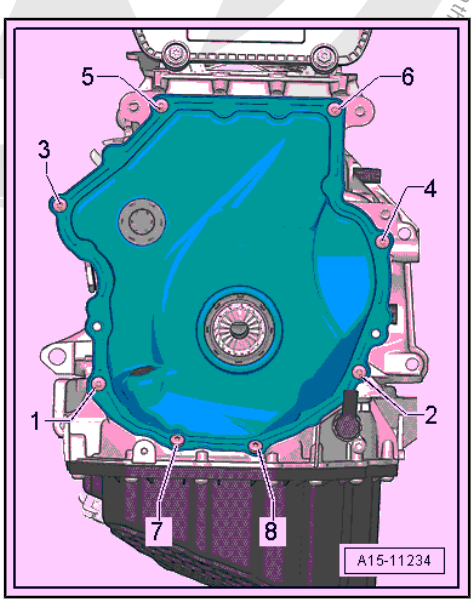

Lower Cover for Timing Chain - Tightening Sequence for 15 Bolts

Tighten the Steel Bolts -1 through 15- in Three Stages in the Sequence Shown:

1 - Bolts -1 through 15- 8 Nm

2 - Bolts -1, 2,4, 5, and 7 to 15- 45° additional turn

3 - Bolts -3 and 6- after installing the vibration damper tighten with an additional turn.

Tighten the Aluminum Bolts -1 through 15- in Three Stages in the Sequence Shown:

1 - Bolts -1 through 15- 4 Nm

2 - Bolts -1, 2,4, 5, and 7 to 15- 45° additional turn

3 - Bolts -3 and 6- after installing the vibration damper tighten with an additional turn.

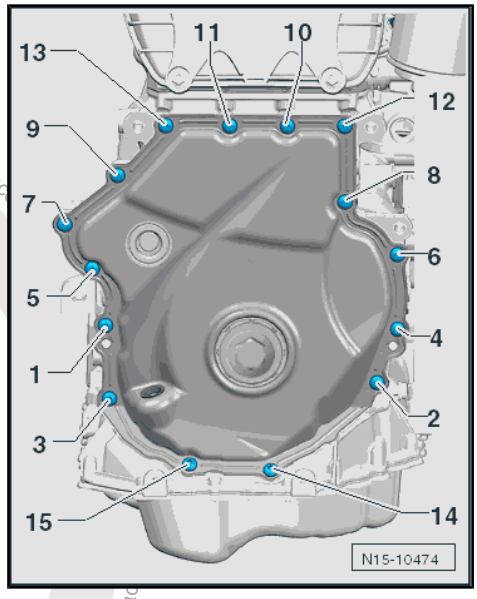

2.2 Timing Chain Cover, Removing and Installing

⇒ "2.2.1 Upper Timing Chain Cover, Removing and Installing", page 106

⇒ "2.2.2 Lower Timing Chain Cover, Removing and Installing", page 108

2.2.1 Upper Timing Chain Cover, Removing and Installing

Special tools and workshop equipment required

- Hose Clip Pliers - VAS6362-
- Sealant. Refer to the Parts Catalog.

> **Caution**
>
> ***This procedure contains mandatory replaceable parts. Refer to component overview prior to starting procedure.***

Mandatory Replacement Parts

- Seals - Upper Timing Cover
- O-ring - Oil Dipstick Tube

Removing

- The engine is cold.

– Briefly open the coolant reservoir cap -arrow- to reduce the residual pressure in the coolant system.

– Remove the engine cover. Refer to ⇒ "3.1 Engine Cover, Removing and Installing", page 38 .

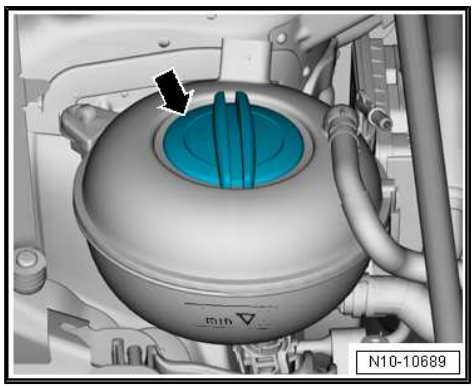

Protected copyright. Copying for private or commercial purposes, in part or in whole, is not permitted unless authorised by Volkswagen AG. Volkswagen AG does not guarantee or accept any liability for the use of information in this document. Copyright by Volkswagen AG.

– Loosen hose clamps -1-, remove coolant hose and push to the right side.

– Press the release button on the EVAP canister hose -2-, remove hose and free it up.

– Remove the Camshaft Adjustment Valve 1 - N205- / Exhaust Camshaft Adjustment Valve 1 - N318- . Refer to ⇒ "4.4 Camshaft Adjustment Valve 1 N205 and Exhaust Camshaft Adjustment Valve 1 N318 , Removing and Installing", page 161 .

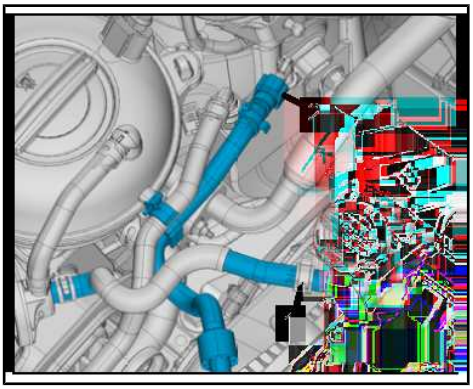

Note

Ignore -item 2-.

– Remove the bolt -1-.

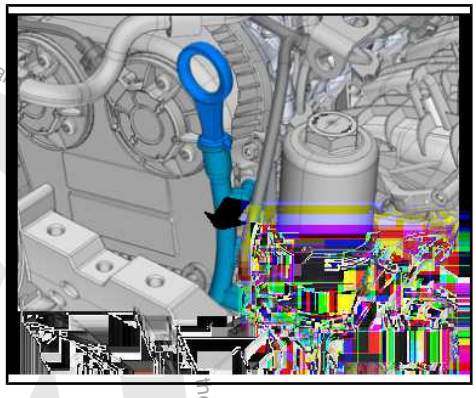

– Unclip the guide tube from the timing chain upper cover in direction of -arrow-.

– Remove the bolts -1 through 6- and the upper cover for the timing chain.

– If necessary, remove bolts -3 and 5-.

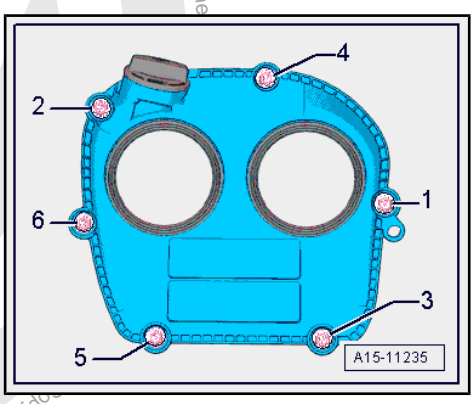

Protected by copyright. Copying for private or commercial purposes in part or in whole, is not permitted unless authorised by Volkswagen AG. Volkswagen AG does not guara
Copyright by Volkswagen AG.

Installing

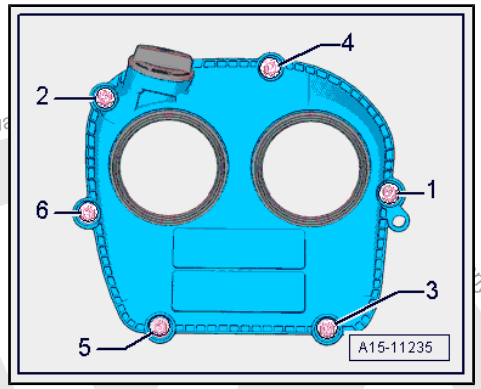

- Replace seals.
- Install the cover on the cylinder head the tighten the bolts hand tight. While doing so make sure that the seal lays correctly on the cylinder head.
- Tighten the bolts -1 through 6- in the sequence shown. Refer to
⇒ Fig. ""Timing Chain Guard Upper Cover - Tightening Sequence"" , page 105 .
- Install the Camshaft Adjustment Valve 1 - N205- and Exhaust Camshaft Adjustment Valve 1 - N318- . Refer to
⇒ "4.4 Camshaft Adjustment Valve 1 N205 and Exhaust Camshaft Adjustment Valve 1 N318 , Removing and Installing", page 161 .
- Install the engine cover. Refer to
⇒ "3.1 Engine Cover, Removing and Installing", page 38 .

Tightening Specifications

- Refer to ⇒ "2.1 Overview - Timing Chain Cover", page 104

2.2.2 Lower Timing Chain Cover, Removing and Installing

Special tools and workshop equipment required

- Vibration Damper Assembly Tool - T10531-

Caution

This procedure contains mandatory replaceable parts. Refer to component overview prior to starting procedure.

Mandatory Replacement Parts

- Cover - Lower Timing Chain
- Bolts - Lower Timing Chain Cover
- O-ring - Oil Dipstick Tube

Note

Dependent on the sealing compound sealant, bends the cover when removing. Because of this, always replace the cover.

Removing

- Remove right front wheel housing liner. Refer to ⇒ Body Exterior; Rep. Gr. 66 ; Wheel Housing Liner; Front Wheel Housing Liner, Removing and Installing .
- Remove the engine support. Refer to
⇒ "1.6 Engine Support, Removing and Installing", page 55 .
- Remove the vibration damper. Refer to
⇒ "1.4 Vibration Damper, Removing and Installing", page 47 .
- Drain the engine oil. Refer to ⇒ Maintenance ; Booklet 36.1 ; Procedure Descriptions; Engine Oil, Draining, Replacing Oil Filter, and Filling .

Protected by copyright. Copying for private or commercial purposes, in part or in whole, is not permitted unless authorised by Volkswagen AG. Copyright by Volkswagen AG. No liability with respect to the correctness of information in this document.

– Remove the Oil Pressure Regulation Valve - N428- . Refer to ⇒ “4.8 Oil Pressure Regulation Valve N428 , Removing and Installing”, page 206 .

– Remove the ribbed belt tensioner. Refer to ⇒ “1.3 Ribbed Belt Tensioner, Removing and Installing”, page 47 .

– Free up the clip -2- for the electrical wiring harness.

– Remove the screw -1-.

– Unclip the guide tube from the timing chain upper cover in direction of -arrow-.

– Remove the guide tube from the timing chain guard.

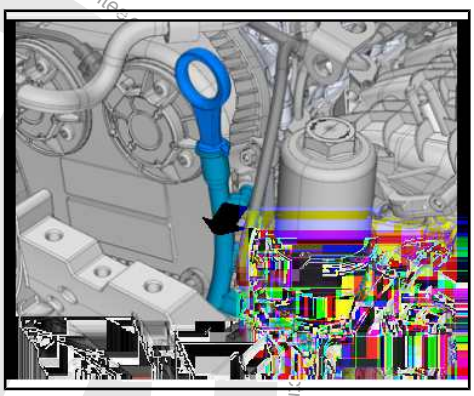

– Remove the bolts -1 through 15-.

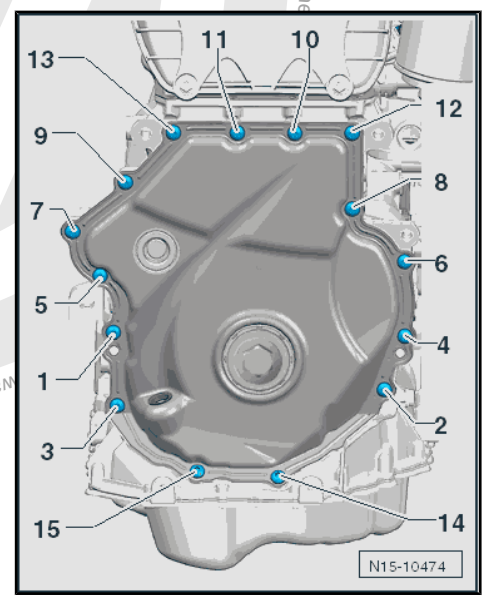

Note

There may be only eight bolts installed, depending on the version.

– Pry off the lower timing chain cover.

Installing

Note

- *Be sure to check the expiration date of the silicone sealant.*
- *Refer to the Parts Catalog for the silicone grease.*
- *The cover must be installed within five minutes after applying the silicone sealant.*
- *Replace the bolts that were tightened with an additional turn.*
- *Replace sealing ring and O-ring.*
- *Risk of contaminating the lubricating system. Cover open parts of engine.*

– Remove any sealant residue on the cylinder block using a flat blade scraper.

– Clean any oil or grease off the sealing surfaces.

Protected by copyright. Copying for private or commercial purposes, in part or in whole, is not permitted unless authorised by Volkswagen AG. Volkswagen AG does not guarantee

– Make sure both alignment bushings for centering the cover -arrows- are present.

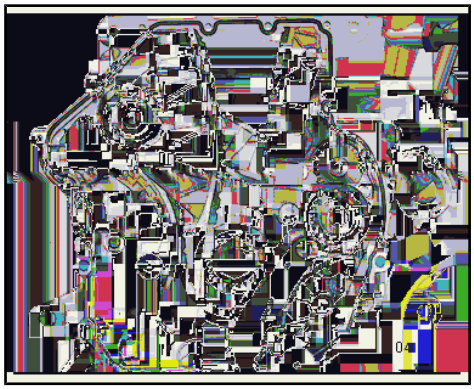

– Cut the tube nozzle at the front marking (nozzle diameter: approximately 3 mm).

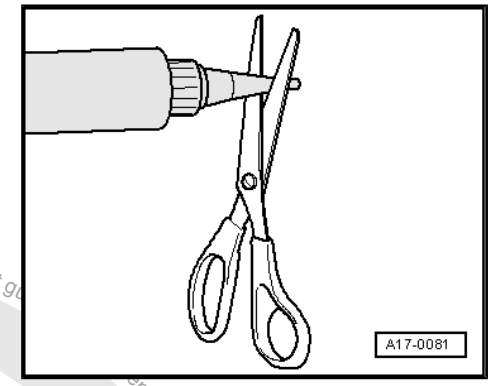

Cover with 15 bolts

– Apply the Silicone Sealant - D 174 003 A2- to the clean sealing surface -arrow 1- and on the edges -arrows 2- of the new cover as shown in the illustration.

♦ Sealant bead thickness: 2 to 3 mm.

Protected by copyright. Copying for private or commercial purposes, in part or in whole, is not permitted unless authorised by Volkswagen AG. Volkswagen AG does not guarantee. Copyright by Volkswagen AG.

– Immediately attach the cover and tighten the bolts.

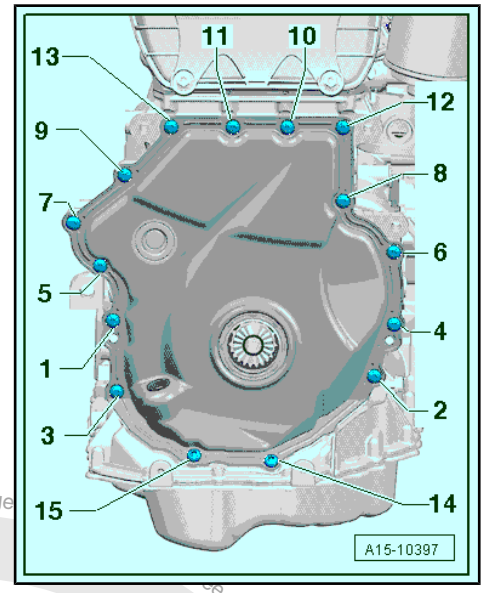

Note

Tighten the bolts -3 and 6- with an additional turn after installing the vibration damper. The bolts must be removed again to install the vibration damper.

– Tighten the bolts -1 through 15- in the sequence shown. Refer to ⇒ "2.1 Overview - Timing Chain Cover", page 104 .

Cover with 8 Bolts

– Apply the Silicone Sealant - D 174 003 A2- to the clean sealing surface -arrow 1- and on the edges -arrows 2- of the new cover as shown in the illustration.

♦ Sealant bead thickness: 2 to 3 mm.

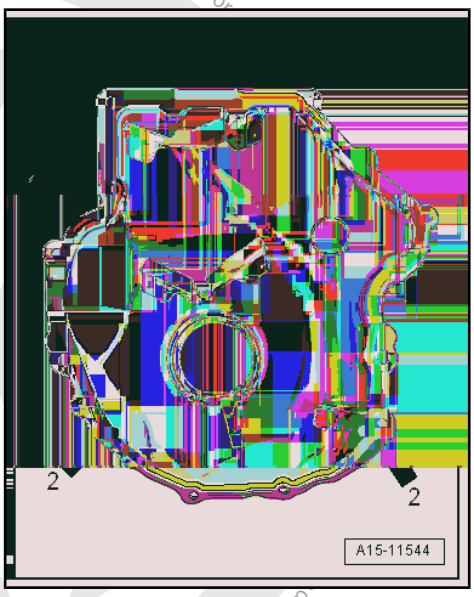

Note

♦ *The cover must be installed within five minutes after application of silicone sealant.*

♦ *The sealant bead may not be thicker than specified, otherwise excess sealant could enter the oil pan and clog the oil intake pipe screen.*

Protected by copyright. Copying for private or commercial purposes, in part or in whole, is not permitted unless authorised by Volkswagen AG. Volkswagen AG does not guarantee or accept any liability with respect to the correctness and completeness of this document. Copyright by Volkswagen AG.

– Immediately attach the cover and tighten the bolts.

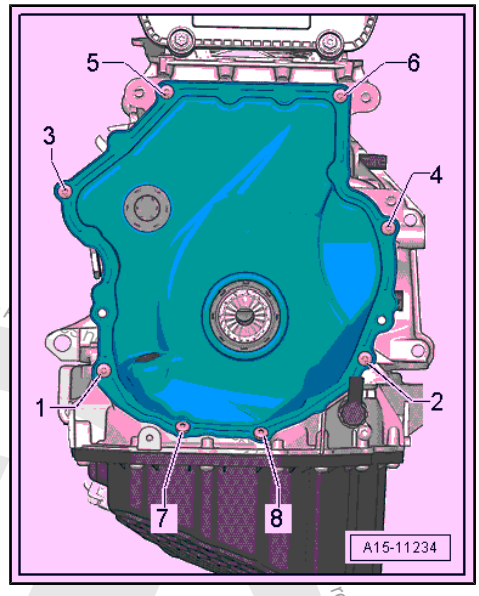

Note

Tighten the bolts -1 and 4- with an additional turn after installing the vibration damper. The bolts must be removed again to install the vibration damper.

– Tighten the bolts -1 through 8- in the sequence shown. Refer to ⇒ "2.1 Overview - Timing Chain Cover", page 104 .

Continuation for Both Versions

– Install the vibration damper. Refer to ⇒ "1.4 Vibration Damper, Removing and Installing", page 47 .

– Install the Oil Pressure Regulation Valve - N428- . Refer to ⇒ "4.8 Oil Pressure Regulation Valve N428 , Removing and Installing", page 206 .

– Install the ribbed belt tensioning damper. Refer to ⇒ "1.5 Auxiliary Components Bracket, Removing and Installing", page 53 .

– Install the ribbed belt. Refer to ⇒ "1.2 Ribbed Belt, Removing and Installing", page 46 .

– Install the right front wheel housing liner. Refer to ⇒ Body Exterior; Rep. Gr. 66 ; Wheel Housing Liner; Front Wheel Housing Liner, Removing and Installing .

– Fill with engine oil and then check the level. Refer to ⇒ Maintenance ; Booklet 36.1 ; Procedure Descriptions; Engine Oil, Draining, Replacing Oil Filter, and Filling .

Tightening Specifications

- Refer to ⇒ "2.1 Overview - Timing Chain Cover", page 104
- Refer to ⇒ Fig. ""Engine Support - Tightening Specification and Sequence"" , page 56
- Refer to ⇒ "2.1 Overview - Subframe Mount", page 29

2.3 Vibration Damper Sealing Ring, Replacing

Special tools and workshop equipment required

- Seal Installer - Crankshaft - T10354-
- Press Piece - Gearbox - T10375-
- Assembly Tool - Knurled Nut - T10531/4- from the Assembly Tool - T10531-
- Seal Installer - Crankshaft - T40274-

Caution

This procedure contains mandatory replaceable parts. Refer to component overview prior to starting procedure.

Mandatory Replacement Parts

- Bolt - Vibration Damper
- O-ring - Oil Dipstick Tube

Protected by copyright. Copying for private or commercial purposes, in part or in whole, is not permitted unless authorised by Volkswagen AG. Volkswagen AG does not guarantee or assume any liability with respect to the correctness of information in this document. Copyright by Volkswagen AG.

♦ Seal - Vibration Damper

Removing

– Remove the vibration damper. Refer to
⇒ “1.4 Vibration Damper, Removing and Installing”, page 47 .

• The Tensioning Pins - T10531/2- is installed.

– Remove the seal -arrow- with the Seal Installer - Crankshaft - T40274- .

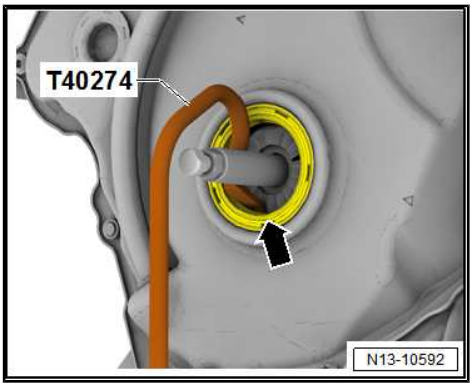

Installing

– Clean the running and sealing surface.

– Push the seal -arrow- on the Seal Installer - Crankshaft - T10354- .

• The closed side of the seal points to the Seal Installer - Crankshaft - T10354- .

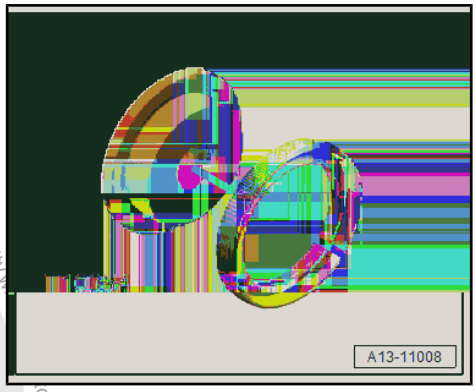

– Push the seal -arrow- with the Seal Installer - Crankshaft - T10354- on the Tensioning Pins - T10531/2- and place on the lower timing chain cover.

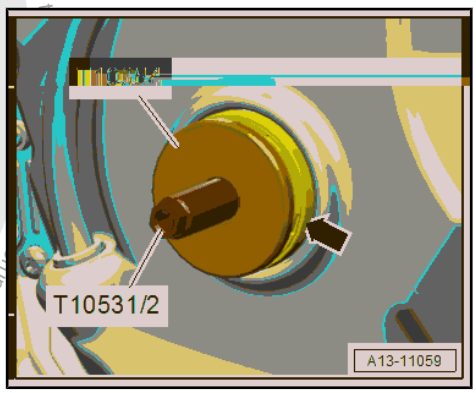

– Additional attach the Press Piece - Gearbox - T10375- and tighten the Knurled Nut - T10531/4- .

– Drive the seal in all the way using the Seal Installer - Crankshaft - T10354- .

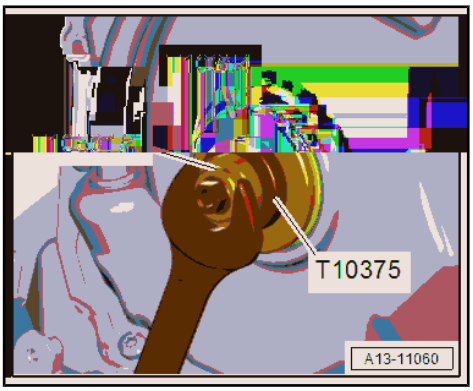

Note

♦ *Replace the vibration damper bolt.*

♦ *Replace the O-ring.*

Assemble in reverse order of disassembly. Note the following:

– Install the vibration damper. Refer to
⇒ “1.4 Vibration Damper, Removing and Installing”, page 47 .

Volkswagen AG. Volkswagen AG does not guarantee or accept any liability with respect to the correctness of information in this document. Copyright by Volkswagen AG. Protected by copyright. Copying for private or commercial purposes, in part or in whole, is not permitted unless authorised by Volkswagen AG.

3 Chain Drive

⇒ “3.1 Overview - Camshaft Timing Chain”, page 114

⇒ “3.2 Overview - Balance Shaft Drive Chain”, page 116

⇒ “3.3 Camshaft Timing Chain, Removing and Installing”, page 118

⇒ “3.4 Balance Shaft Drive Chain, Removing and Installing”, page 130

⇒ “3.5 Chain Length, Checking”, page 130

⇒ “3.6 Valve Timing, Checking”, page 131

3.1 Overview - Camshaft Timing Chain

Note

- *After performing work on the chain drive the adaptation value in the engine control module must be adapted. To do this turn on the ignition and select the following menu items on the Vehicle Diagnostic Tester :*
- `01 - Engine Electronics`
- `Guided Functions`
- `01 - Adaptation After Repair Work On the Chain Drive`

Protected by copyright. Copying for private or commercial purposes, in part or in whole, is not permitted unless authorised by Volkswagen AG. Volkswagen AG does not guarantee or accept any liability with respect to the correctness of information in this document. Copyright by Volkswagen AG.

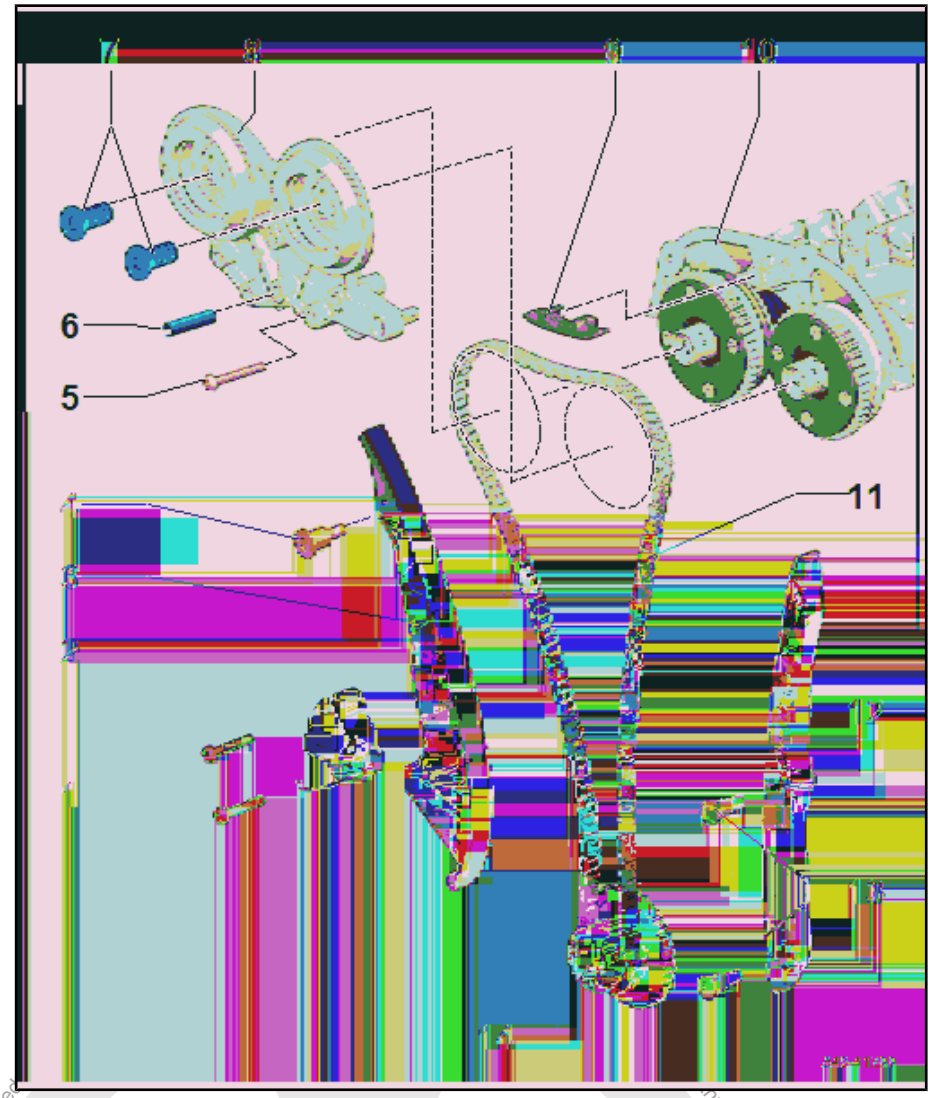

1 - Bolt

- ❑ 4 Nm + 90°
- ❑ Replace after removing

2 - Chain Tensioner

- ❑ Is under tension
- ❑ Secure using Tensioner Locking Tool - T40267- before removing

3 - Timing Chain Tensioning Rail

4 - Guide Pins

- ❑ 20 Nm

5 - Bolt

- ❑ Replace after removing
- ❑ Tightening specification and sequence for bearing bracket with steel bolts. Refer to ⇒ Fig. ""Tightening Specification and Sequence for Bearing Bracket with Steel Bolts"" , page 116
- ❑ Tightening specification and sequence for bearing bracket with aluminum bolts. Refer to ⇒ Fig. ""Tightening Specification and Sequence for Bearing Bracket with Aluminum Bolts"" , page 116

6 - Mounting Sleeve

- ❑ Depending on the version, not present on every bearing bracket
- ❑ Pulled into the cylinder head with the bolt

7 - Pilot Valves

- ❑ 35 Nm
- ❑ Left thread
- ❑ Removing using Assembly Tool - T10352/2-

8 - Bearing Bracket

- ❑ Depending on the version with adapter sleeve. Refer to the Parts Catalog for the allocation.
- ❑ Tightening specification and sequence for bearing bracket with steel bolts. Refer to ⇒ Fig. ""Tightening Specification and Sequence for Bearing Bracket with Steel Bolts"" , page 116
- ❑ Tightening specification and sequence for bearing bracket with aluminum bolts. Refer to ⇒ Fig. ""Tightening Specification and Sequence for Bearing Bracket with Aluminum Bolts"" , page 116

9 - Camshaft Timing Chain Guide Rail

10 - Camshaft Housing

11 - Camshaft Timing Chain

- ❑ Before removing, mark the direction of rotation with paint

12 - Camshaft Timing Chain Guide Rail

13 - Guide Pins

- ❑ 20 Nm

Protected by copyright. Copying for private or commercial purposes, in part or in whole, is not permitted. Copyright by Volkswagen AG. No liability with respect to the correctness of information in this document.

14 - Three Stage Chain Sprocket

- ❑ Crankshaft
- ❑ Installed position. Refer to ⇒ Fig. ""Three Stage Chain Sprocket - Installed Position"" , page 116

Tightening Specification and Sequence for Bearing Bracket with Steel Bolts

– Tighten the bolts in steps in the sequence shown:

Step	Bolts	Tightening Specifications
1.	-1-	3 Nm
2.	-1 to 6-	9 Nm

Tightening Specification and Sequence for Bearing Bracket with Aluminum Bolts

– Tighten the bolts in steps in the sequence -1 to 6-:

Step	Bolts	Tightening Specification/Additional Turn
1.	-1- through -6-	4 Nm
2.	-1- through -6-	180° additional turn

Three Stage Chain Sprocket - Installed Position

- Both surfaces must -arrows- must line up across from each other.

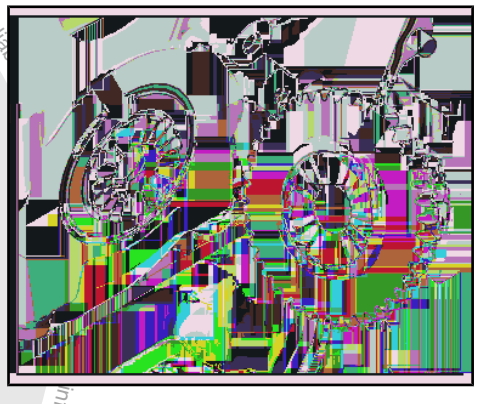

3.2 Overview - Balance Shaft Drive Chain

Note

- *After performing work on the chain drive the adaptation value in the engine control module must be adapted. To do this turn on the ignition and select the following menu items on the Vehicle Diagnostic Tester :*
- `01 - Engine electronics`
- `Guided functions`
- `01 - Adaptation after repair work on the chain drive`

Protected by copyright. Copying for private or commercial purposes, in part or in whole, is not permitted unless authorised by Volkswagen AG. Volkswagen AG does not guarantee or accept any liability with respect to the correctness of information in this document. Copyright by Volkswagen AG.

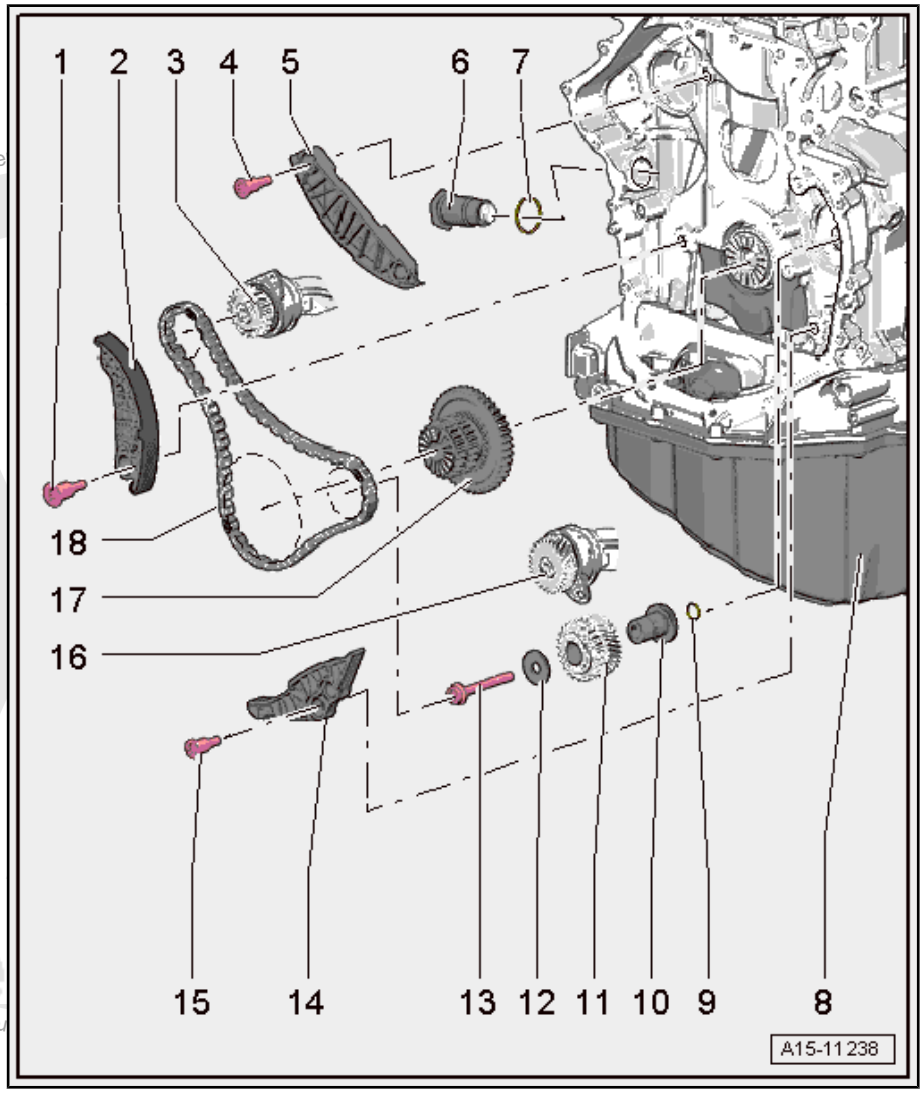

1 - Guide Pin
- ❑ 20 Nm

2 - Tensioning Rail
- ❑ For the timing chain

3 - Balance Shaft
- ❑ Exhaust side
- ❑ Must be replaced after removing
- ❑ Lubricate the bearing with engine oil
- ❑ Replacing. Refer to ⇒ “4.2.2 Balance Shaft Exhaust Side, Removing and Installing”, page 73 .

4 - Guide Pin
- ❑ 20 Nm

5 - Guide Rail
- ❑ For the timing chain

6 - Chain Tensioner
- ❑ 85 Nm
- ❑ Install with locking fluid. Refer to the Parts Catalog.

7 - Seal

8 - Cylinder Block

9 - O-Ring
- ❑ Coat with engine oil

10 - Mounting Pin
- ❑ Lubricate with engine oil
- ❑ Installed position. Refer to ⇒ Fig. ““Mounting Pins - Installation Position”“ , page 118

11 - Intermediate Sprocket
- ❑ The intermediate sprocket must be replaced if the bolt -item 13- ⇒ Item 13 (page 117) is loosened.

12 - Thrust Washer

13 - Bolt
- ❑ Replace after removing
- ❑ The intermediate sprocket -item 11- ⇒ Item 11 (page 117) must be replaced if the bolt is loosened.
- ❑ Tightening sequence. Refer to ⇒ Fig. ““Intermediate Sprocket Tightening Sequence”“ , page 118

14 - Guide Rail
- ❑ For balance shaft timing chain

15 - Guide Pin
- ❑ 20 Nm

16 - Balance Shaft
- ❑ Intake side
- ❑ Must be replaced after removing
- ❑ Lubricate the bearing with engine oil
- ❑ Replacing. Refer to ⇒ “4.2.1 Balance Shaft Intake Side, Removing and Installing”, page 70 .

17 - Three Stage Chain Sprocket
- ❑ Installed position. Refer to ⇒ Fig. ““Three Stage Chain Sprocket - Installed Position”“ , page 116

Protected by copyright. Copying for private or commercial purposes, in part or in whole, is not permitted unless authorised by Volkswagen

18 - Balance Shaft Drive Chain

- ❑ Removing and installing. Refer to
  ⇒ "3.4 Balance Shaft Drive Chain, Removing and Installing", page 130 .

Mounting Pins - Installation Position

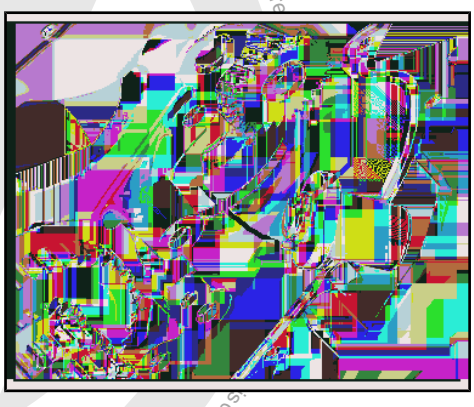

- Replace and lubricate the O-Ring -1-
- The alignment pin -arrow- for the bearing pins must engage in the hole in the cylinder block.
- Lubricate the bearing pins

Intermediate Sprocket Tightening Sequence

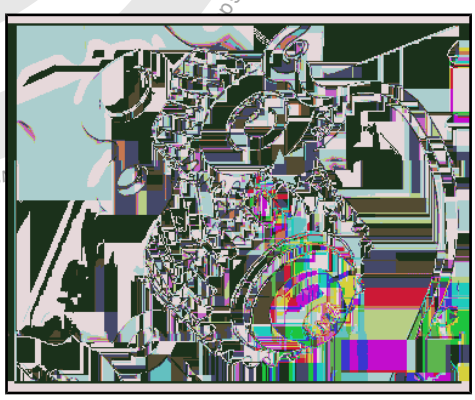

Note

- ♦ *Always replace the intermediate sprocket. Otherwise the backlash will not adjust itself and it could result in engine damage.*
- ♦ *The new intermediate sprocket has an anti-friction coating that wears off after a short period of use, which automatically adjusts the backlash.*

Step	Bolts	Tightening Specification/Additional Turn
1.	-1-	10 Nm
2.	-1-	The intermediate sprocket must not have any play. Loosen and tighten it again if necessary.
3.	-1-	25 Nm
4.	-1-	Turn an additional 90°

3.3 Camshaft Timing Chain, Removing and Installing

Special tools and workshop equipment required

- ♦ Assembly Tool - T10352/2-
- ♦ Counterhold - Vibration Damper - T10355-
- ♦ Locking Pin (3 pc.) - T40011-
- ♦ Chain Tensioner Lever - T40243-
- ♦ Tensioner Locking Tool - T40267-
- ♦ Camshaft Locks - T40271-
- ♦ Adapter - T40266-
- ♦ Assembly Tool - T10531-
- ♦ Individual components of the Assembly Tool - T10531- :
- ♦ Mount - T10531/1-

- Tensioning Pins - T10531/2-
- Turning Over Tool - T10531/3-
- Collar Nut - T10531/4-

Caution

This procedure contains mandatory replaceable parts. Refer to component overview prior to starting procedure.

Mandatory Replacement Parts

- Bolts - Bearing Bracket
- Bolt - Intermediate Sprocket

Removing

– Support the engine in its installed position. Refer to ⇒ “2.5 Engine, Supporting in Installed Position”, page 33 .

– Remove the engine bracket. Refer to ⇒ “2.2 Engine Mount, Removing and Installing”, page 30 .

– Remove engine support. Refer to ⇒ “1.6 Engine Support, Removing and Installing”, page 55 .

– Remove timing chain upper cover. Refer to ⇒ “2.2.1 Upper Timing Chain Cover, Removing and Installing”, page 106 .

– Remove the noise insulation. Refer to ⇒ Body Exterior; Rep. Gr. 66 ; Noise Insulation; Overview - Noise Insulation .

– Remove the right wheel housing liner front section. Refer to ⇒ Body Exterior; Rep. Gr. 66 ; Wheel Housing Liner; Front Wheel Housing Liner, Removing and Installing .

– Turn the vibration damper with the Counterhold - Vibration Damper - T10355- to the “Top Dead Center (TDC) point”.

- The markings -1- on the camshaft chain sprockets must be opposite the markings -2 and 3-.
- The notch on the vibration damper and the marking on the lower cover for timing chain -arrow- must be opposite one another.

– Remove the lower timing chain cover. Refer to ⇒ “2.2.2 Lower Timing Chain Cover, Removing and Installing”, page 108 .

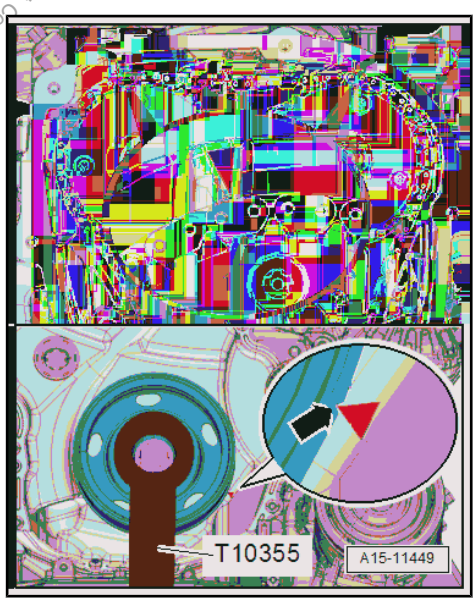

Note

The pilot valve has left-hand threads.

Volkswagen AG, Volkswagen AG does not guarantee or accept any liability with respect to the correctness of information in this document. Copyright by Volkswagen AG. Permitted only for authorised Volkswagen Group dealerships and their employees. Distribution to third parties, not permitted unless authorised by Volkswagen AG.

– Remove the left and right pilot valves using the Assembly Tool - T10352/2- in the direction of the -arrow-.

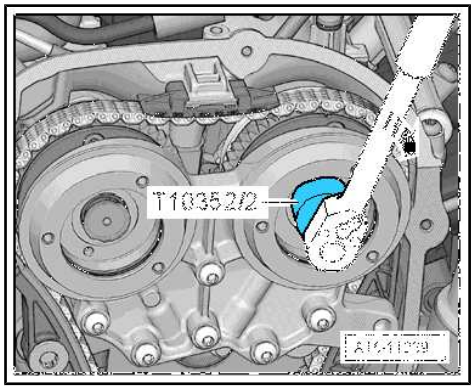

– Remove the bolts -arrows- and remove the bearing bracket.

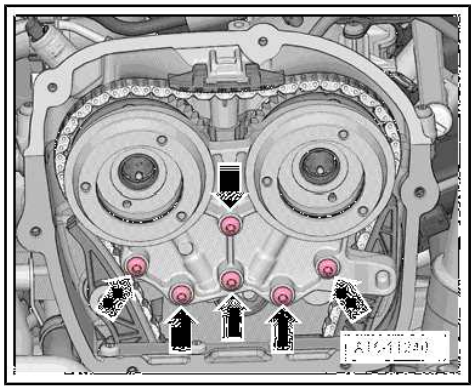

– Remove the bolts -arrows-.

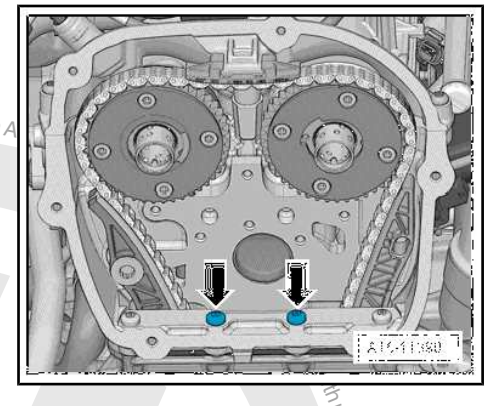

– Install the Chain Tensioner Lever - T40243- in direction of -arrows-.
– Press the chain tensioner locking ring -1- together and hold it.
– Slowly press and hold the Chain Tensioner Lever - T40243- in the direction of -arrow-.

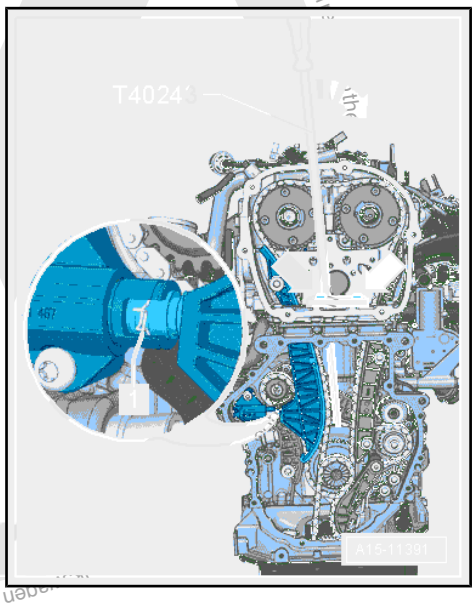

Protected by copyright. Copying for private or commercial purposes, in part or in whole, is not permitted unless authorised by Volkswagen AG. Volkswagen AG.

– Secure the chain tensioner with the Tensioner Locking Tool - T40267- .

– Remove the Chain Tensioner Lever - T40243- .

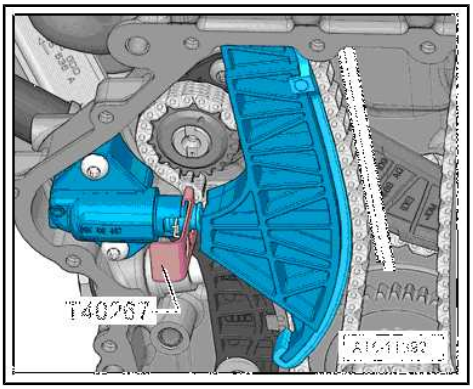

– Bolt the Camshaft Lock - Component 2 - T40271/2- to the cylinder head and slide into the splines on the chain sprocket in the direction of the -arrow 2-. Rotate the intake camshaft with the Adapter - T40266- -1- if necessary.

– Install the Camshaft Lock - Component 1 - T40271/1- on the cylinder head.

For the following steps a second technician is necessity.

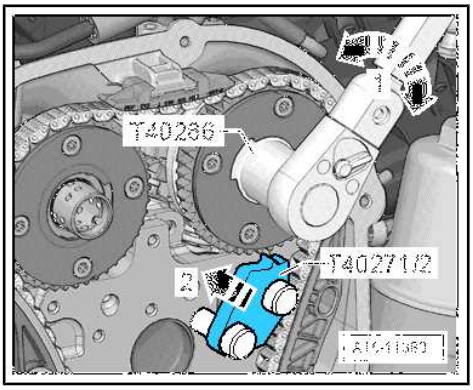

– Hold the exhaust camshaft with the Adapter - T40266- in the direction of the -arrow A-. Remove the bolt -1- and guide the tensioning rail -2- downward. Turn the camshaft clockwise in direction of -arrow A- until the Camshaft Lock - Component 1 - T40271/1- can be pushed in the chain sprocket splines -C-

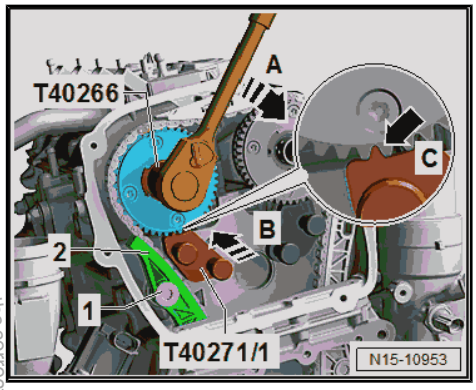

– Remove the guide rail -1- by unlocking the latch -arrow- with a screwdriver and pushing the guide rail forward.

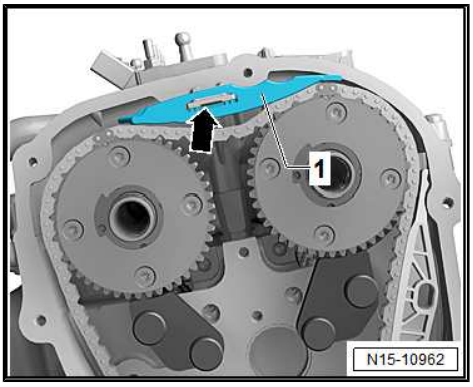

Protected by copyright. Copyright or private or commercial purposes, in part or in whole, is not permitted unless authorised by Volkswagen AG. Volkswagen AG does not guarantee or accept any liability with respect to the correctness of information in this document. Copyright by Volkswagen AG.

– Remove the bolts -arrows- and remove the chain tensioner -1-.

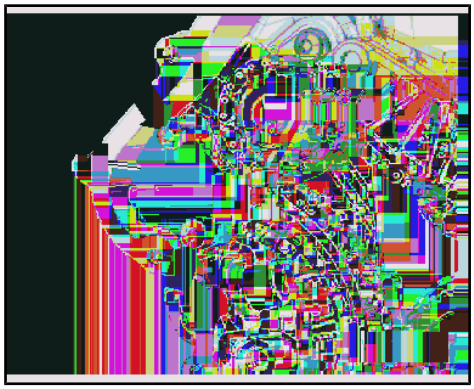

– Press the oil pump chain tensioner bracket in direction of -arrow- and lock with Locking Pin (3 pc.) - T40011- .
– Remove the bolt -1- and remove the chain tensioner.

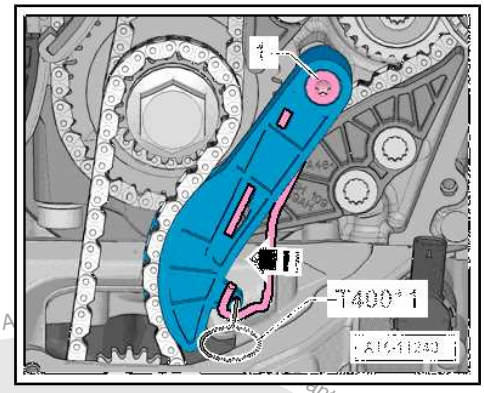

– Remove the bolts -1- and remove the glide rail -2-.

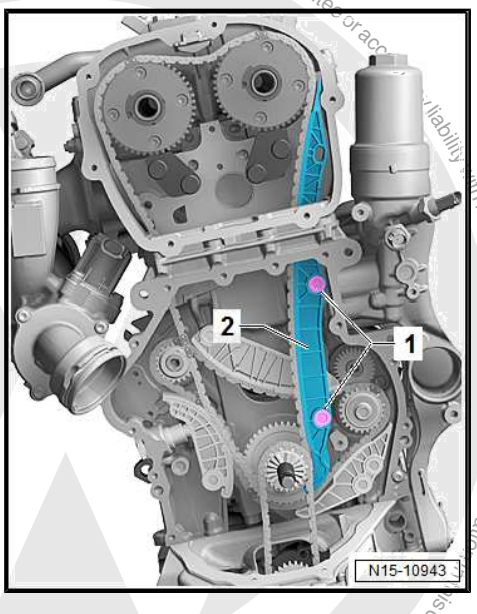

– Remove the camshaft timing chain from the camshaft sprocket and hang it on the camshaft pins -arrows-.

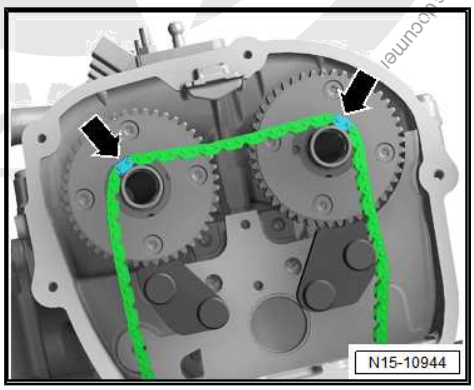

Protected by copyright. Copying for private or commercial purposes, in part or in whole, is not permitted unless authorised by Volkswagen A

– Remove the chain tensioner -1- for the balance shaft timing chain.

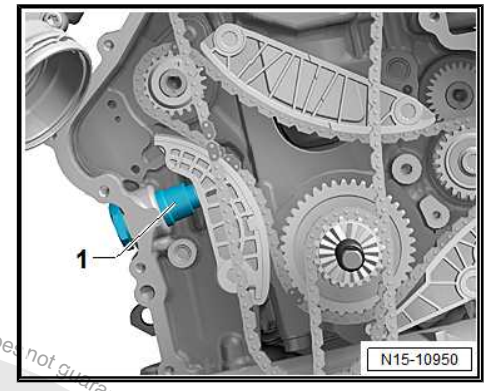

– Remove the bolts -1-. Remove the tensioning rail -2- and the glide rails -3 and 4-.
– Loosen the adjusting bolt -A- and remove the tensioning pin -B-.
– Remove the oil pump drive timing chain to remove the three stage chain sprocket.

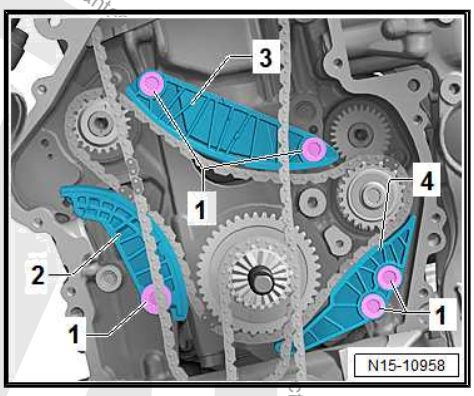

– Remove the camshaft timing chain and drive chain for the balance shaft.

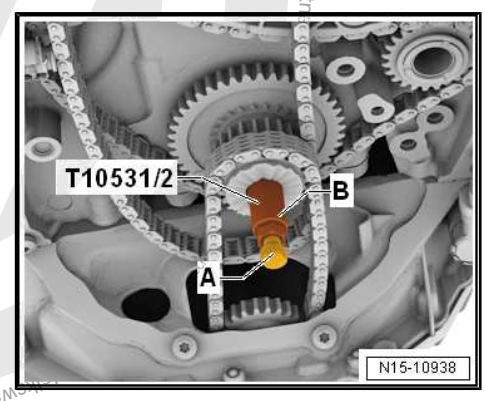

Protected by copyright. Copying for private or commercial purposes, in part or in whole, is not permitted unless authorised by Volkswagen AG. Volkswagen AG does not guarantee

Installing

– Check that the crankshaft is at Top Dead Center (TDC). The flat area on the crankshaft -arrow- must be horizontal.
– Draw the markings on the cylinder block -1-, as shown, with a waterproof marker.

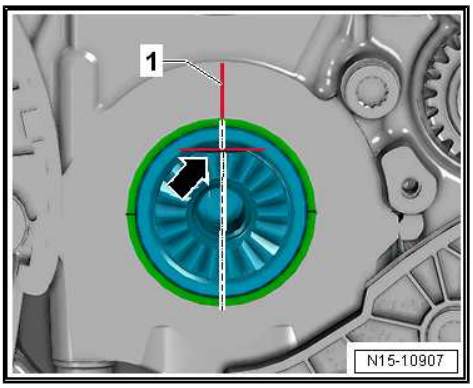

– Draw a marking -2- on the three stage chain sprocket tooth -1- with a waterproof marker.

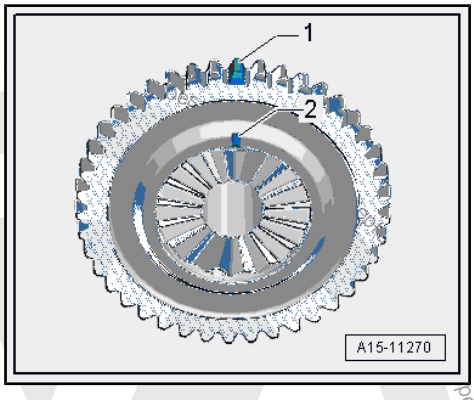

– Turn the intermediate sprocket and balance shaft to the markings -arrow-, do not loosen the bolt -1-.

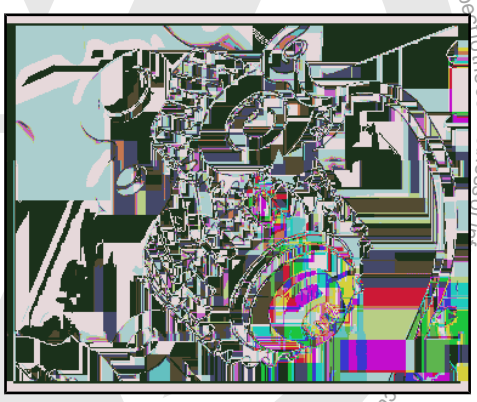

Note

- *The painted links of the chain must be positioned on the markings on the chain sprockets.*
- *Do not pay attention to the position of any additional painted chain links that may also be present.*

– Lay the balance shaft drive chain, and position the painted links -arrows- with the markings on the chain sprockets.

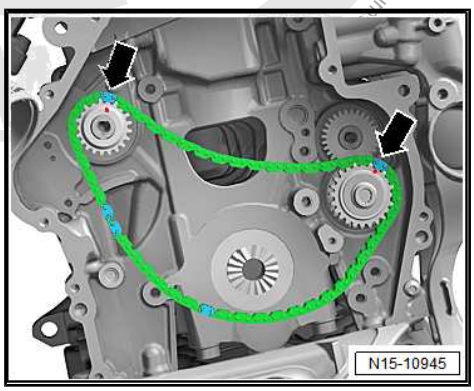

– Install the guide track -1- and tighten bolts -arrows-.

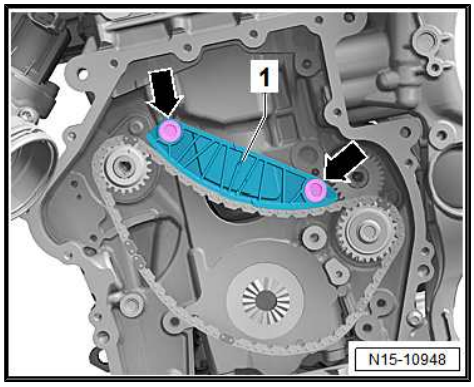

Protected by copyright. Copying for private or commercial purposes, in part or in whole, is not permitted unless authorised by Volkswagen AG.

– Engage the camshaft timing chain with the painted links -arrows- on the camshaft pins.

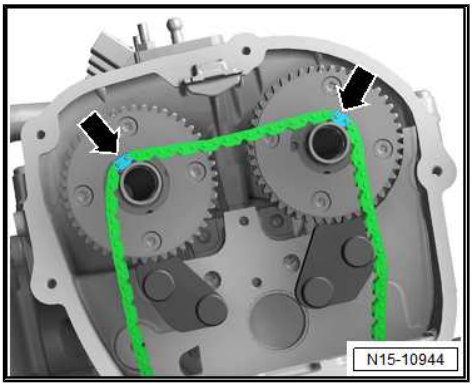

– Lay the oil pump drive timing chain onto the three stage chain sprocket.

– Tilt the three stage chain sprocket in the direction of the -arrow- toward the engine and secure it to the crankshaft. The marking -arrows- must be positioned opposite each other.

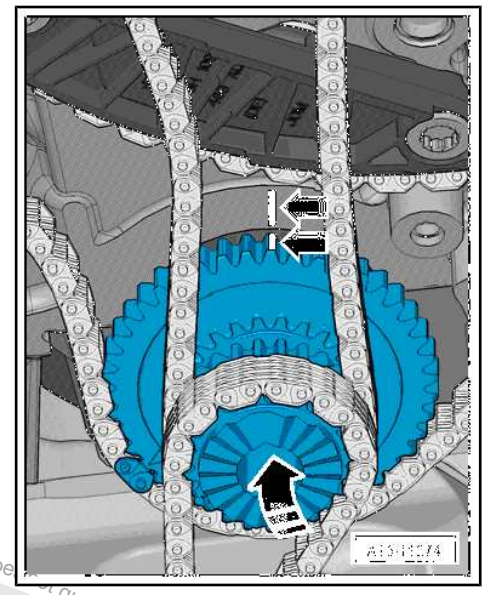

1. Install the Tensioning Pins - T10531/2- in the crankshaft and tighten hand-tight.

2. Install the Turning Over Tool - T10531/3- . Tighten the Knurled Nut - T10531/4- hand tight. Using a 32 mm open end wrench move the Turning Over Tool - T10531/3- back and forth slightly while doing this tighten the Knurled Nut - T10531/4- until the chain sprocket is seated securely on the crankshaft splines. Now tighten the adjusting bolt -A-.

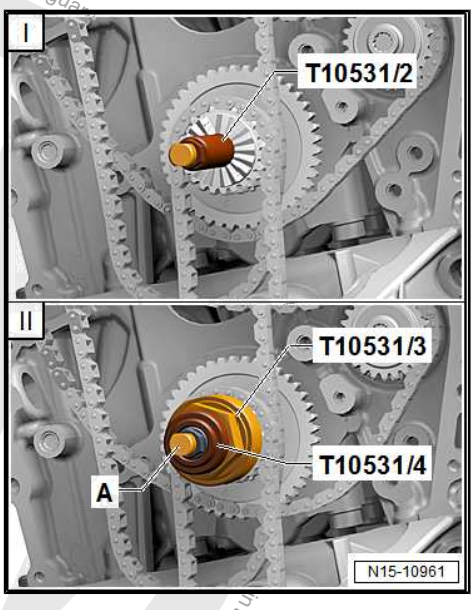

Protected by copyright. Copying for private or commercial purposes, in part or in whole, is not permitted unless authorised by Volkswagen AG. Volkswagen AG does not guarantee the accuracy and completeness of this document. Copyright by Volkswagen AG.

– Position the painted chain link in the balance shaft drive chain -arrow- at the marking on the three stage chain sprocket. Install the tensioning rail -1- and the glide rail -2-. Tighten bolts -3-.

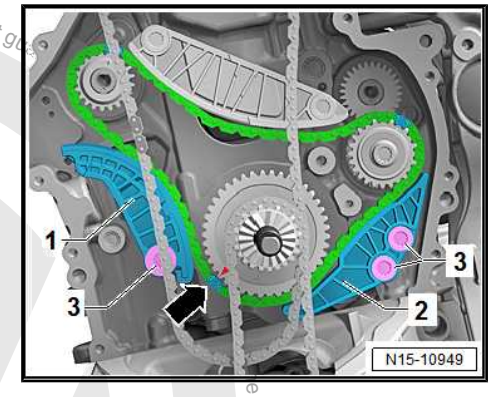

– Install the chain tensioner -1-.

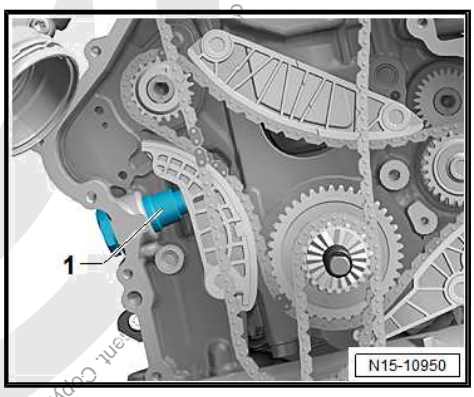

– Check the adjustment again. The painted chain links -arrows- must line up with the markings on the chain sprockets.

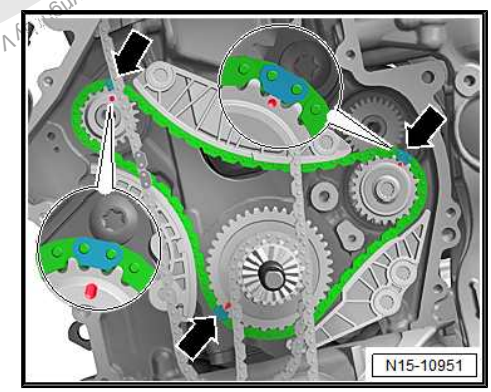

– Place the camshaft timing chain on the intake camshaft, exhaust camshaft and the crankshaft. Position the painted chain links -arrows- on the markings on the chain sprockets.

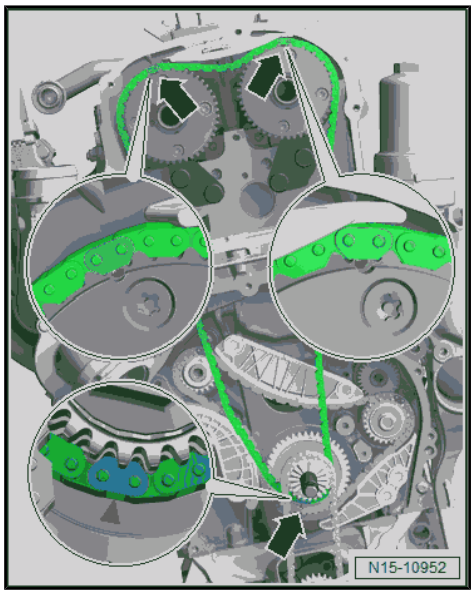

Volkswagen AG. Volkswagen AG does not guarantee the accuracy and completeness of this electronic data. Copyright. Copying for private or commercial purposes, in part or in whole, is not permitted unless authorised by Volkswagen AG.

– Install the guide rail -2- and tighten the bolts -1-.

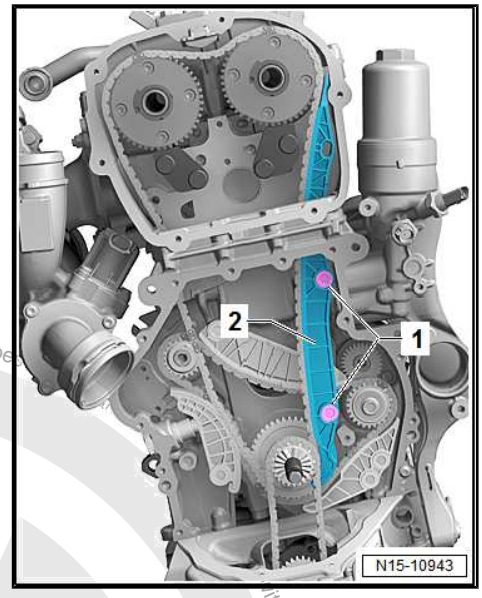

– Install the upper glide rail -1-.

For the following steps a second technician is necessity.

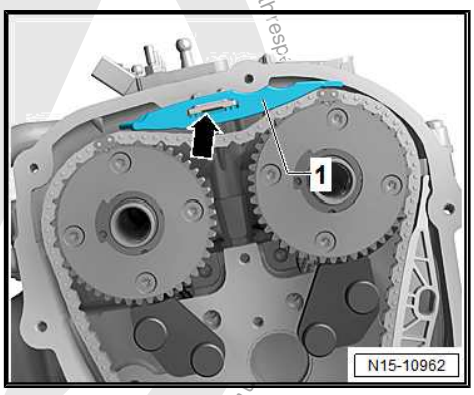

– Turn the exhaust camshaft with the Adapter - T40266- slightly in the direction of -arrow A- and push the Camshaft Lock - Component 1 - T40271/1- from the camshaft splines in the direction of -arrow B-. Release the camshaft in the direction in the direction of -arrow C-, until the timing chain touches the glide rail -1-. Hold the camshaft in this position, install the tensioning rail -2- and tighten the bolts -3-.

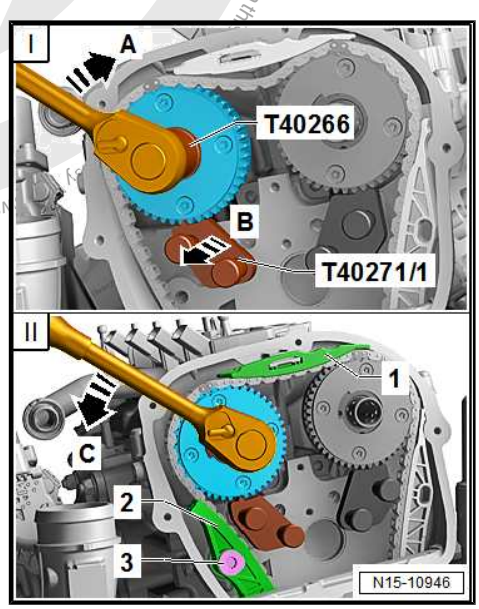

Protected by copyright. Copying for private or commercial purposes, in part or in whole, is not permitted unless authorised by Volkswagen AG. Volkswagen AG does not guarantee or accept any liability with respect to the correctness of information in this document. Copyright by Volkswagen AG.

– Install the chain tensioner -1- and tighten the bolts -arrows-.

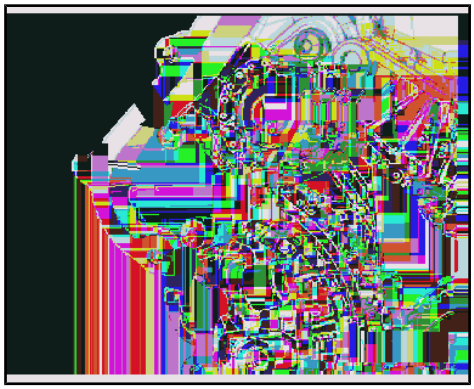

– Install the chain tensioner -2-. The wire clip -arrow- must come in to contact with the oil pan upper section opening. Tighten the bolt -1- and remove the Locking Pin (3 pc.) - T40011- .

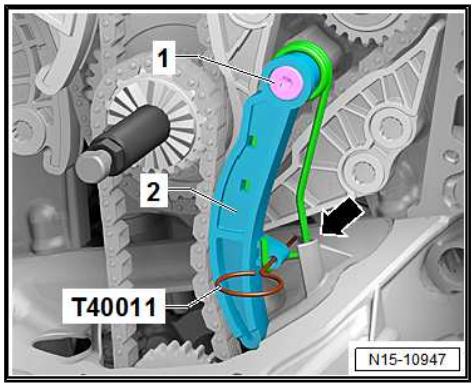

– Turn the intake camshaft in the direction of the arrow -1- using the Adapter - T40266- until the Camshaft Lock - T40271/2- -2- can be pushed out of the chain sprocket splines. Release the camshaft.

– Remove the Camshaft Lock - Component 1 - T40271/1- and Camshaft Lock - Component 2 - T40271/2- .

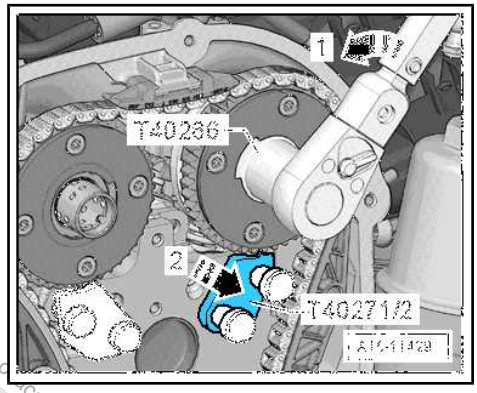

– Check the adjustment. The painted chain links -arrows- must line up with the markings on the chain sprockets.

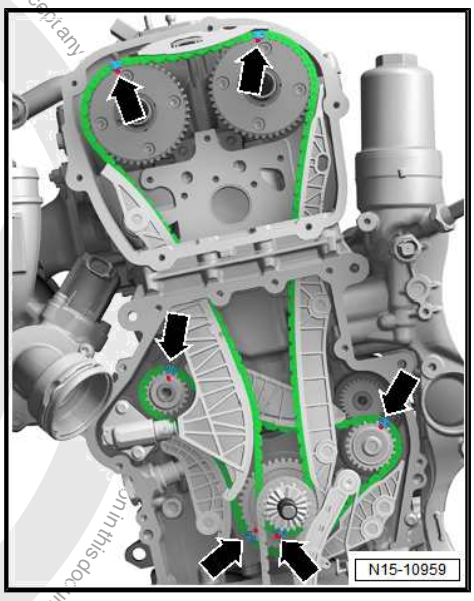

Protected by copyright. Copying for private or commercial purposes, in part or in whole, is not permitted unless authorised by Volkswagen AG. Volkswagen AG does not guarantee or accept any
on in this document. Copyright by Volkswagen AG.

– Install the bolts -arrows- and tighten them. Tightening specification. Refer to -item 4- ⇒ Item 4 (page 91) .

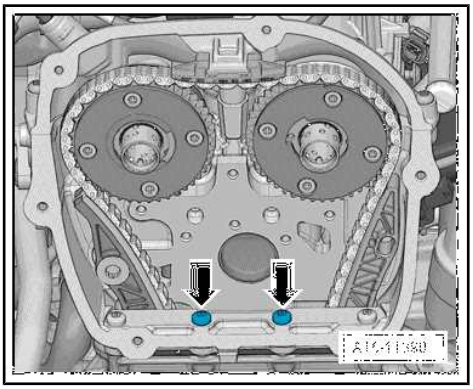

– Lubricate the holes -arrows- with engine oil.

Note

Adapter sleeve -1- is not present on every bearing bracket.

– Attach the bearing mount. Do not tilt it when doing this. Hand-tighten the bolts -arrows-.

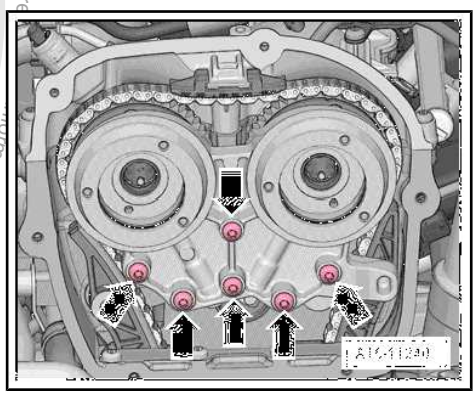

– Remove the Tensioner Locking Tool - T40267- .

– Tighten the bearing bracket bolts -item 5- ⇒ Item 5 (page 115) .

– Install the pilot valves -item 6- ⇒ Item 7 (page 115) .

– Let the engine turn a second time in the direction of engine rotation.

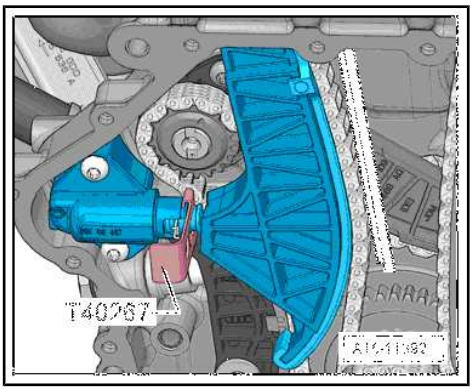

Note

Due to the ratio, the painted chain links no longer match up after the engine has been turned.

Printed by copyright. Copyright by Volkswagen AG. Volkswagen AG does not guarantee or accept any liability with respect to the correctness of information in this document. Copyright by Volkswagen AG. Copying for private or commercial purposes, in part or in whole, is not permitted unless authorised by Volkswagen AG.

– Remove the turning over tool and install the lower timing chain cover. Refer to ⇒ page 109 .

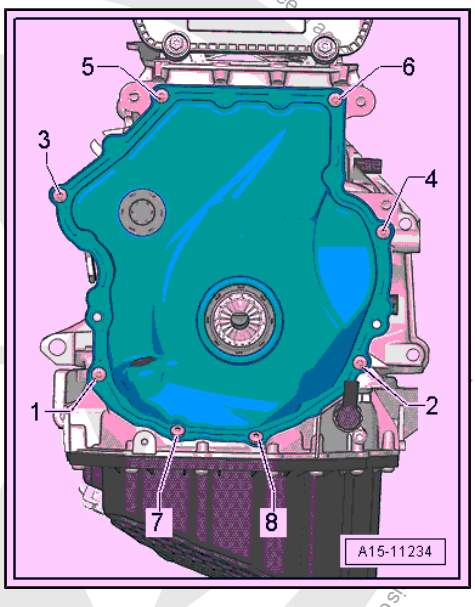

Note

Tighten the bolts -1 and 4- with an additional turn after installing the vibration damper. The bolts must be removed again to install the vibration damper.

– Install the vibration damper. Refer to ⇒ "1.4 Vibration Damper, Removing and Installing", page 47 .

– Install the upper timing chain cover. Refer to ⇒ "2.2.1 Upper Timing Chain Cover, Removing and Installing", page 106 .

– Install the ribbed belt tensioning damper. Refer to ⇒ "1.3 Ribbed Belt Tensioner, Removing and Installing", page 47 .

– Install the ribbed belt. Refer to ⇒ "1.2 Ribbed Belt, Removing and Installing", page 46 .

The rest of the installation is performed in reverse order of removal, noting the following:

– After performing work on the chain drive the adaptation value in the Engine Control Module (ECM) must be adapted. To do this turn on the ignition and select the following menu items on the Vehicle Diagnostic Tester :

- `01 - Engine Electronics`
- `Guided Functions`
- `01 - Adaptation After Repair Work On the Chain Drive`

Tightening Specifications

- Refer to ⇒ "3.1 Overview - Camshaft Timing Chain", page 114 .
- Refer to ⇒ "3.2 Overview - Balance Shaft Drive Chain", page 116 .
- Refer to ⇒ Body Exterior; Rep. Gr. 66 ; Noise Insulation; Overview - Noise Insulation .

3.4 Balance Shaft Drive Chain, Removing and Installing

The procedure "Balance shaft drive chain removing and installing" is in the "Camshaft timing chain removing and installing" procedure. Refer to ⇒ "3.3 Camshaft Timing Chain, Removing and Installing", page 118 .

3.5 Chain Length, Checking

Caution

This procedure contains mandatory replaceable parts. Refer to component overview prior to starting procedure.

Mandatory Replacement Parts

- Plug - Lower Timing Chain Cover

Note

If due to complaints (for example noises) an elongated camshaft timing chain is suspected, the chain length can be checked as described as follows.

– Remove the plug -arrow-. The plugs must be replaced.

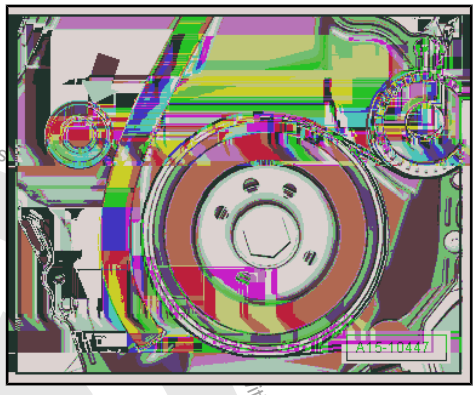

– Turn the vibration damper in direction of engine rotation until the chain tensioner piston is maximally driven out in direction of -arrow-.

– Count the visible piston threads.

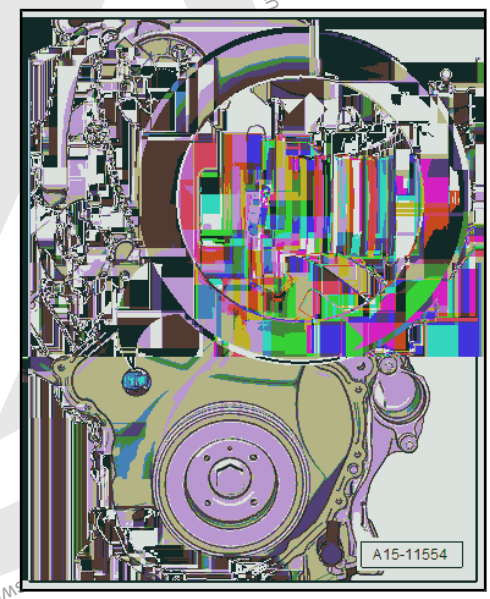

Note

The visible threads are all of the threads that are located to the right of the chain tensioner housing -arrow-.

- If six or fewer threads are visible: the camshaft timing chain does not need to be replaced.
- If seven or more threads are visible: the camshaft timing chain must be replaced. Refer to ⇒ "3.3 Camshaft Timing Chain, Removing and Installing", page 118 .

3.6 Valve Timing, Checking

Special tools and workshop equipment required

- Dial Gauge Set - VAS6341-
- Dial Gauge Adapter - T10170A-

– Remove timing chain upper cover. Refer to ⇒ "2.2.1 Upper Timing Chain Cover, Removing and Installing", page 106 .

– Remove the noise insulation. Refer to ⇒ Body Exterior; Rep. Gr. 66 ; Noise Insulation; Overview - Noise Insulation .

Protected by copyright. Copying for private or commercial purposes, in part or in whole, is not permitted unless authorised by Volkswagen AG. Volkswagen AG does not

– Turn the crankshaft with the socket SW 24 on the vibration damper in the direction of the engine rotation until the markings -arrows- are almost on top.

– Remove the spark plug from cylinder 1.

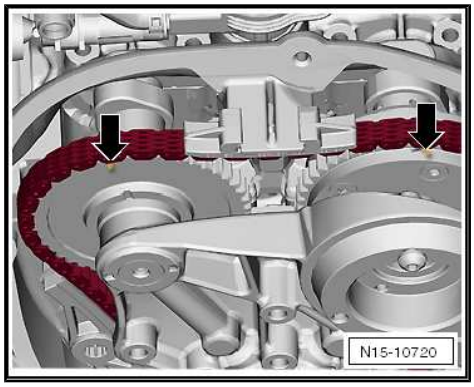

– Install the Dial Gauge Adapter - T10170/A- all the way into the spark plug thread.

– Insert the Dial Gauge - 0-10mm - VAS6341- using the Extension - T10170A/1- until stop and secure with the locking nut -arrow-.

– Turn the crankshaft slowly to maximum dial reading in the direction of the engine rotation. When the maximum dial reading is reached (Bottom Dead Center (BDC) of the meter) position the piston at »Top Dead Center (TDC)«.

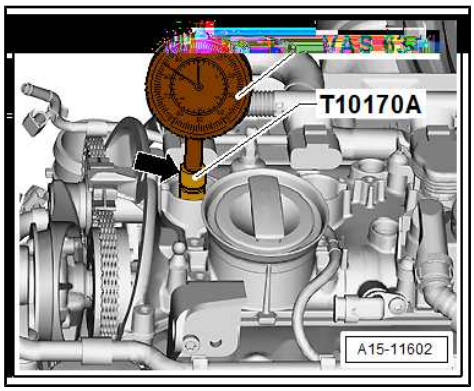

Note

- *Use a ratchet with a 24 mm socket to turn the vibration damper.*
- *If the crankshaft was turned past "TDC", turn the crankshaft two more turns in the direction of the engine rotation. Do not turn the engine in the opposite direction of the engine rotation.*

- The notch on the vibration damper must line up with the arrow marking on the timing chain lower cover -arrow-.
- The markings -1- on the camshaft chain sprockets must be opposite the markings -2 and 3- on the cylinder head.

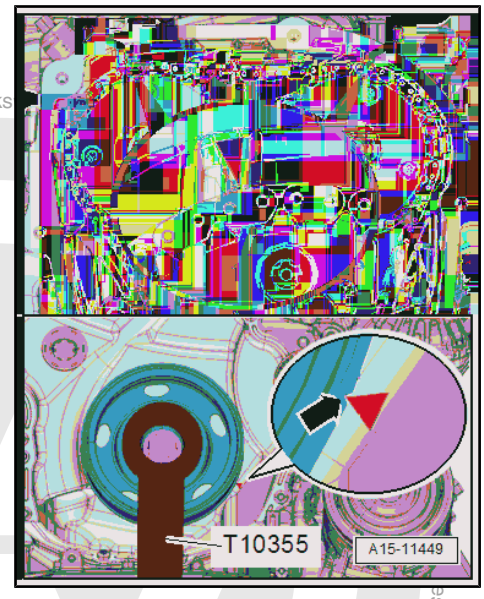

Protected by copyright. Copying for private or commercial purposes, in part or in whole, is not permitted unless authorised by Volkswagen AG. Volks
Copyright by Volkswagen AG.
ess of information in this document.

4 Valvetrain

⇒ “4.1 Overview - Valvetrain”, page 133

⇒ “4.2 Camshaft, Removing and Installing”, page 136

⇒ “4.3 Camshaft Adjustment Valve 1 N205 , Removing and Installing”, page 160

⇒ “4.4 Camshaft Adjustment Valve 1 N205 and Exhaust Camshaft Adjustment Valve 1 N318 , Removing and Installing”, page 161

⇒ “4.5 Sliding Bar Ball, Installing”, page 162

⇒ “4.6 Valve Stem Seals, Removing and Installing”, page 163

4.1 Overview - Valvetrain

Note

- *The cylinder head and the cylinder head cover must be replaced together.*
- *Do not start the engine for approximately 30 minutes after installing the camshafts. The hydraulic equalization elements must seat themselves (otherwise the valves will crash into the pistons).*
- *After working on the valvetrain and lifters, carefully rotate the crankshaft by hand at least two full revolutions before starting to be sure that valves do not strike the pistons.*
- *Replace the gaskets and seals.*
- *After performing work on the chain drive the adaptation value in the Engine Control Module (ECM) must be adapted. To do this turn on the ignition and select the following menu items on the Vehicle Diagnostic Tester :*
- `01 - Engine Electronics`
- `Guided Functions`
- `01 - Adaptation After Repair Work On the Chain Drive`

Protected by copyright. Copyright for private or commercial purposes, in part or in whole is not permitted unless authorised by Volkswagen AG. Volkswagen AG does not guarantee or accept any liability with respect to the correctness of information in this document. Copyright by Volkswagen AG.

1 - Exhaust Valve

- ❑ Do not rework, only lapping is permitted
- ❑ Valve dimensions. Refer to ⇒ “5.3 Valve Dimensions”, page 170 .
- ❑ Valve guides, checking. Refer to ⇒ “5.1 Valve Guides, Checking”, page 170 .

2 - Cylinder Head

3 - Valve Stem Seal

- ❑ Replacing. Refer to ⇒ “4.6 Valve Stem Seals, Removing and Installing”, page 163 .

4 - Valve Spring

5 - Valve Spring Retainer

6 - Valve Retainers

7 - Hydraulic Adjusting Element

- ❑ Do not interchange
- ❑ Lubricate contact surface

8 - Clip

- ❑ For hydraulic adjuster

9 - Roller Rocker Lever

- ❑ Removing and installing. Refer to ⇒ “4.2 Camshaft, Removing and Installing”, page 136 .
- ❑ Mark the installed position for installation later
- ❑ Check roller for easy movement
- ❑ Lubricate the running surfaces before installing

10 - Exhaust Camshaft

- ❑ Removing and installing. Refer to ⇒ “4.2 Camshaft, Removing and Installing”, page 136 .
- ❑ Check radial clearance using Plastigage® (roller rocker lever removed)
- ❑ Radial clearance: 0.024 to 0.066 mm
- ❑ Run-out: maximum 0.04 mm

11 - Spring

- ❑ No replacement part

12 - Ball

- ❑ For sliding bar
- ❑ Installing. Refer to ⇒ “4.5 Sliding Bar Ball, Installing”, page 162 .

13 - Cylinder Head Cover

- ❑ With integrated camshaft bearings
- ❑ Clean sealing surface, reworking is not permitted.
- ❑ Remove old sealant residue.

liability with respect to the correctness of information in this do

14 - Bolt

- ❑ Replace after removing
- ❑ Loosening. Refer to ⇒ Fig. ""Loosening the Cylinder Head Cover"", page 135
- ❑ Tightening sequence. Refer to ⇒ Fig. ""Cylinder Head Cover Tightening Sequence"", page 135

15 - Intake Camshaft

- ❑ Removing and installing. Refer to ⇒ "4.2 Camshaft, Removing and Installing", page 136 .
- ❑ Check radial clearance using Plastigage® (roller rocker lever removed)
- ❑ Radial clearance: 0.024 to 0.066 mm
- ❑ Run-out: maximum 0.04 mm

16 - Alignment Pins

17 - Alignment Pins

18 - Intake Valve

- ❑ Do not rework, only lapping is permitted
- ❑ Valve dimensions. Refer to ⇒ "5.3 Valve Dimensions", page 170 .
- ❑ Valve guides, checking. Refer to ⇒ "5.1 Valve Guides, Checking", page 170 .

Protected by copyright. Copying for private or commercial purposes, in part or in whole, is not permitted unless authorised by Volkswagen AG. Volkswagen AG does not guarantee or accept any liability with respect to the correctness of information in

Loosening the Cylinder Head Cover

– Loosen the cylinder head cover in the order -1 through 6-.

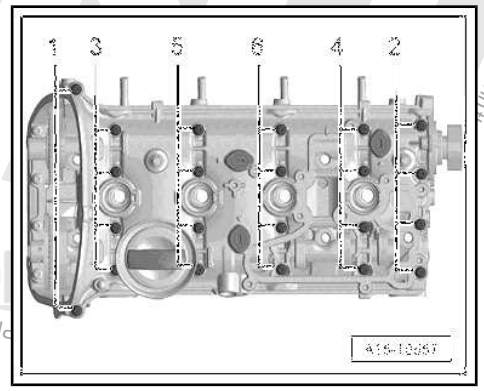

Cylinder Head Cover Tightening Sequence

– Replace the bolts after removing them.

Step	Bolts	Tightening Specification/Additional Turn
1.	-1- through -6-	Install hand-tight in several stages
2.	-1- through -6-	8 Nm
3.	-1- through -6-	Turn an additional 90°.

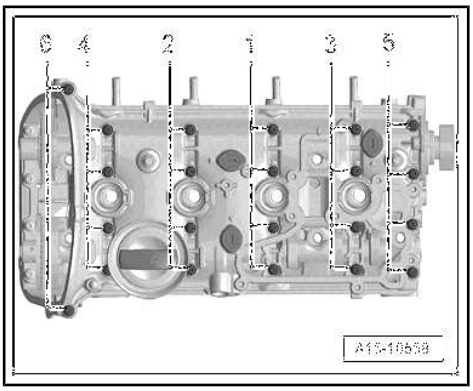

Note

Pay attention that the cylinder head cover is not tilted.

4.2 Camshaft, Removing and Installing

⇒ “4.2.1 Camshaft, Removing and installing. Engine Codes CXBA, CNSA, CXBB, and CNSB”, page 136 .

⇒ “4.2.2 Camshaft, Removing and Installing, Engine Codes CNTA, CXCA, CXCB”, page 148 .

4.2.1 Camshaft, Removing and installing. Engine Codes CXBA, CNSA, CXBB, and CNSB

Special tools and workshop equipment required

- Central Valve Assembly Tool - T10352-
- Counterhold - Vibration Damper - T10355-
- Chain Tensioner Lever - T40243-
- Tensioner Locking Tool - T40267-
- Camshaft Locks - T40271-
- Adapter - T40266-
- Sealant - D 154 103 A1-

Removing

Note

- *The sealing surfaces of the lower cylinder head cover and on the upper cylinder head must not be reworked.*
- *The camshaft bearings are integrated in the cylinder head or cylinder head cover. The tension must be released from the camshaft timing chain before removing the cylinder head cover.*
- *When installing, secure all cable ties back to same positions.*

– Remove the air filter housing. Refer to ⇒ “3.2 Air Filter Housing, Removing and Installing”, page 294 .

– Remove the upper coolant pipe. Refer to ⇒ “3.3 Upper Coolant Pipes, Removing and Installing”, page 242 .

– Remove the ignition coils. Refer to ⇒ “1.3 Ignition Coils with Power Output Stages, Removing and Installing”, page 357 .

– Free up the connector from the clip -4- and pivot it forward.

– Release the retainers -arrow-, remove the wiring duct upward from the bracket and move it towards the front.

Protected by copyright. Copying for private or commercial purposes, in part or whole, is not permitted unless authorised by Volkswagen AG. Volkswagen AG does not guarantee or accept any liability with respect to the correctness of information in this document. Copyright by Volkswagen AG.

– Remove bolts -1, 2 and 3-. Carefully swing coolant line backward slightly.

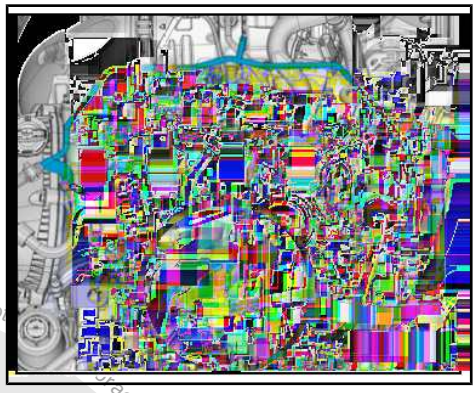

NOTICE

Risk of destroying the coolant pipes through deformation.

– **Never change the coolant pipe bent shape.**

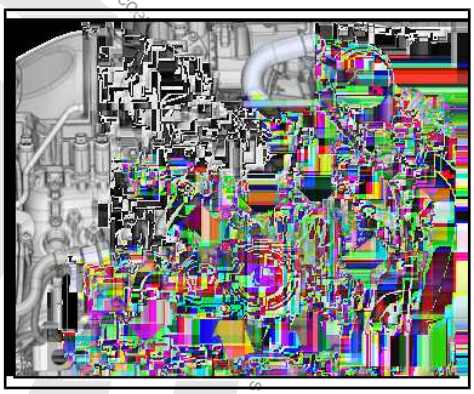

– Disconnect the connector -1- from the EVAP Canister Purge Regulator Valve 1 - N80- .

– Press the release button on the crankcase ventilation hose -2- and remove the hose.

– Remove the bolts -arrows- and the crankcase ventilation.

– Remove the high pressure pump. Refer to ⇒ “7.2 High Pressure Pump, Removing and Installing”, page 328 .

– Remove the vacuum pump. Refer to ⇒ “1.4 Vacuum Pump, Removing and Installing”, page 100 .

– Support the engine in its installed position. Refer to ⇒ “2.5 Engine, Supporting in Installed Position”, page 33 .

– Remove the engine bracket. Refer to ⇒ “2.2 Engine Mount, Removing and Installing”, page 30 .

– Remove the noise insulation. Refer to ⇒ Body Exterior; Rep. Gr. 66 ; Noise Insulation; Overview - Noise Insulation .

– Remove the right wheel housing liner front section. Refer to ⇒ Body Exterior; Rep. Gr. 66 ; Wheel Housing Liner; Front Wheel Housing Liner, Removing and Installing .

– Remove engine support. Refer to ⇒ “1.6 Engine Support, Removing and Installing”, page 55 .

– Remove timing chain upper cover. Refer to ⇒ “2.2.1 Upper Timing Chain Cover, Removing and Installing”, page 106 .

– Turn the vibration damper with the Counterhold - Vibration Damper - T10355- to the “TDC point”.

- The markings -1- on the camshaft chain sprockets must be opposite the markings -2 and 3-.
- The notch on the vibration damper and the marking on the lower cover for timing chain -arrow- must be opposite one another.

Protected by copyright. Copyright by Volkswagen AG. Copyright by Volkswagen AG. Volkswagen AG does not accept any liability for the accuracy of information in this document. Copyright by Volkswagen AG. Unauthorised use or disclosure is not permitted. Unless authorised by Volkswagen AG. Volkswagen AG does not accept any liability for the accuracy of information in this document. Copyright by Volkswagen AG. Unauthorised use or disclosure is not permitted. Unless authorised by Volkswagen AG. Volkswagen AG does not accept any liability for the accuracy of information in this document. Copyright by Volkswagen AG.

– Remove the lower timing chain cover. Refer to ⇒ “2.2.2 Lower Timing Chain Cover, Removing and Installing”, page 108 .

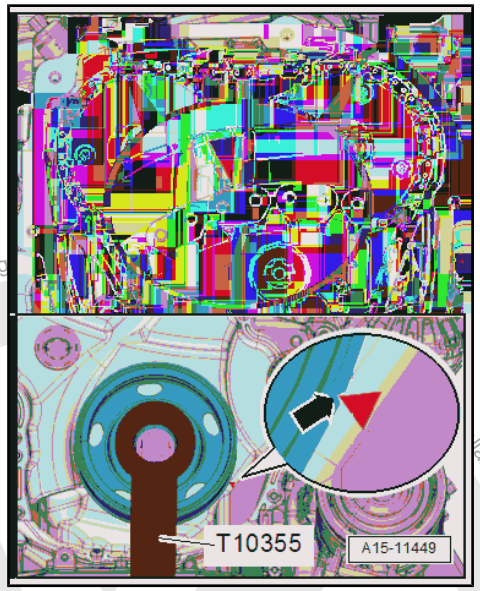

Note

The pilot valve has left-hand threads.

– Remove the left and right pilot valves using the Assembly Tool - T10352/2- in the direction of the -arrow-.

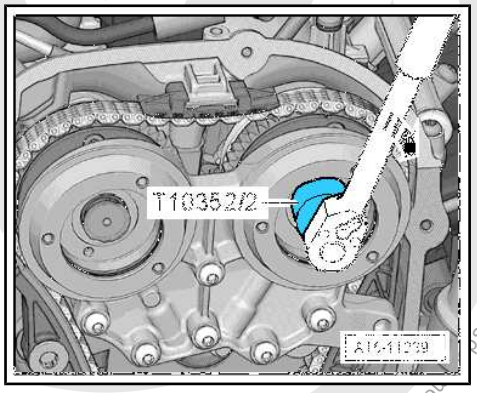

– Remove the bolts -arrows- and remove the bearing bracket.

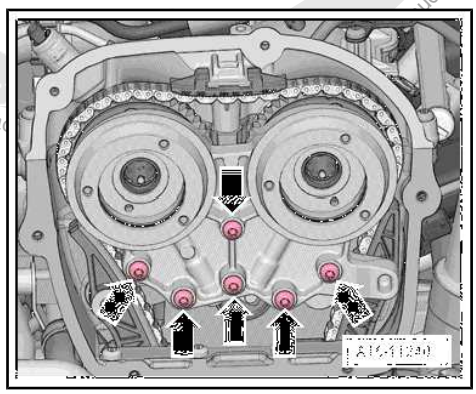

– Remove the bolts -arrows-.

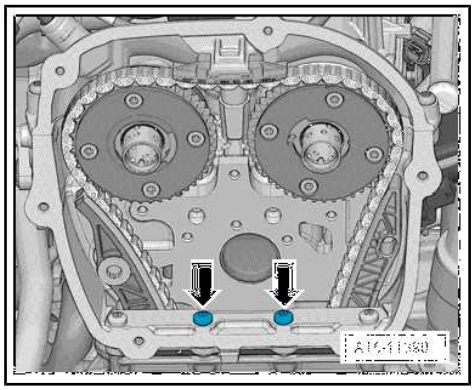

Protected by copyright. Copying for private or commercial purposes, in part or in whole, is not permitted unless authorised by Volkswagen. No liability with respect to the correctness of information in this document.

– Install the Chain Tensioner Lever - T40243- -arrows-.
– Press the chain tensioner locking ring -1- together and hold it.
– Slowly press and hold the Chain Tensioner Lever - T40243- in the direction of -arrow-.

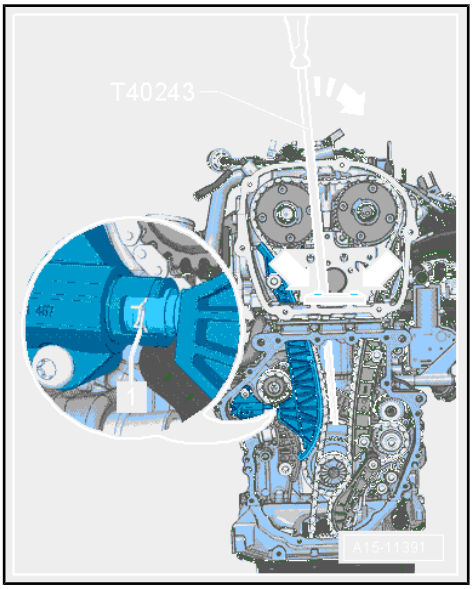

– Secure the chain tensioner with the Tensioner Locking Tool - T40267- .
– Remove the Chain Tensioner Lever - T40243- .

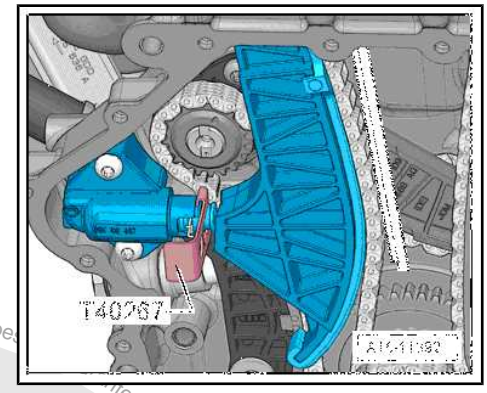

– Bolt the Camshaft Lock - Component 2 - T40271/2- to the cylinder head and slide into the splines on the chain sprocket in the direction of -arrow 2-. Rotate the intake camshaft with the Adapter - T40266- -1- if necessary.
– Install the Camshaft Lock - Component 1 - T40271/1- on the cylinder head.

For the following steps a second technician is necessity.

– Hold the exhaust camshaft with the Adapter - T40266- in the direction of the -arrow A-. Remove the bolt -1- and guide the tensioning rail -2- downward. Turn the camshaft clockwise -A- until the Camshaft Lock - Component 1 - T40271/1- in the direction of -arrow B- can be pushed in the chain sprocket splines -arrow C-.

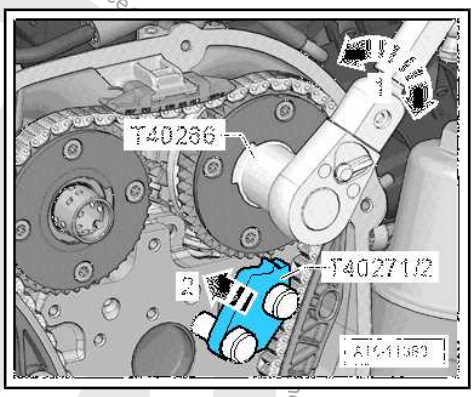

– Check the installation position -arrow C- of the Camshaft Lock - Component 1 - T40271/1- .

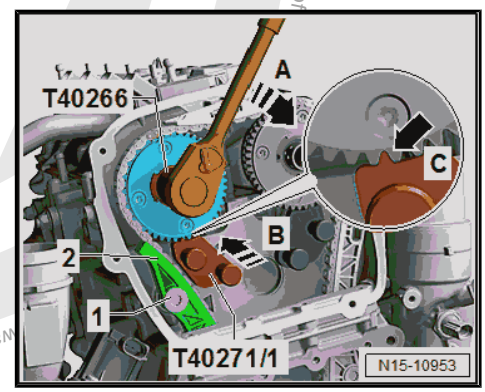

Protected by copyright. Copying for private or commercial purposes, in whole or in part, is not permitted unless authorised by Volkswagen AG. Volkswagen AG does not guarantee or accept any liability with respect to the correctness of information in this document. Copyright by Volkswagen AG.

– Remove the guide rail -1- by unlocking the latch -arrow- with a screwdriver and pushing the guide rail forward.

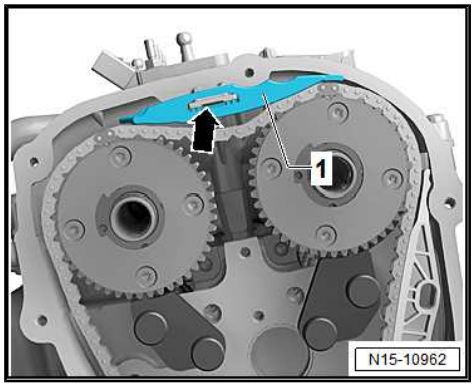

– Press the oil pump chain tensioner bracket in direction of -arrow- and lock with Locking Pin (3 pc.) - T40011- .

– Remove the bolt -1- and remove the chain tensioner.

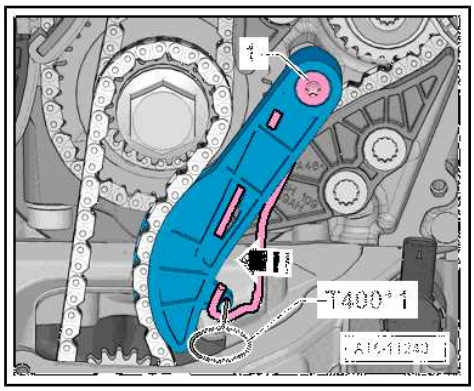

– Remove the bolts -1- and remove the glide rail -2-.

– Remove the camshaft timing chain from the camshaft bearing and guide downward.

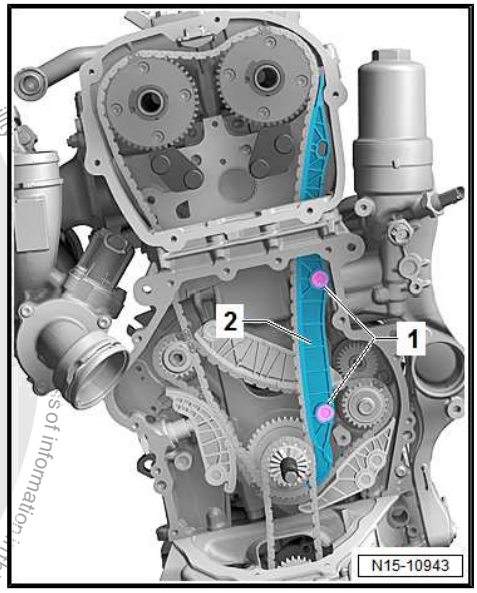

– Install the Turning Over Tool - T10531/3- . In the “TDC point” the flat area -1- points upward. Install the Knurled Nut - T10531/4- . Turn the crankshaft with a 32 mm open end wrench counter-clockwise out of Top Dead Center (TDC).

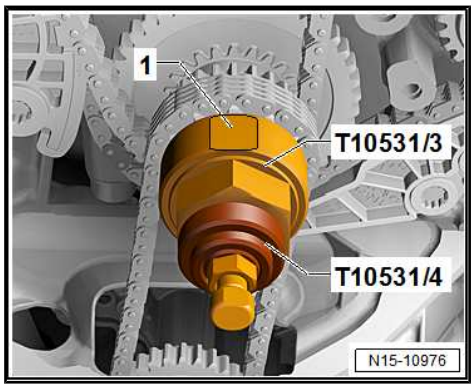

Protected by copyright. Copyright by Volkswagen AG. Volkswagen AG does not guarantee or accept any liability with respect to the correctness of information in this document. Copyright by Volkswagen AG. Protected by copyright. Copying for private or commercial purposes, in part or in whole, is not permitted unless authorised by Volkswagen AG.

– Turn the intake camshaft in the direction of the -arrow 1- using the Adapter - T40266- . Slide the Camshaft Lock - T40271/2- out of the chain sprocket splines -2- and bring the camshaft into the rest position.

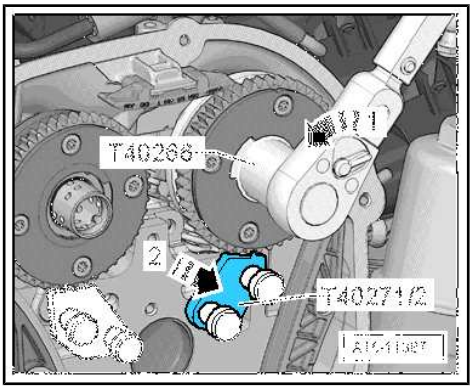

– Turn the exhaust camshaft in the direction of the -arrow 1- using the Adapter - T40266- . Slide the Camshaft Lock - T40271/1- -2- out of the chain sprocket splines and bring the camshaft into the rest position.

– Remove the cylinder head cover bolts in -1 to 6- sequence.

– Remove the cylinder head cover.

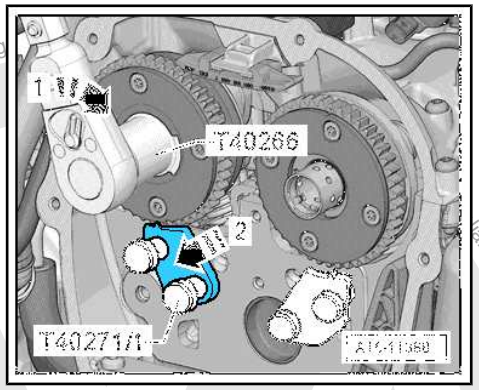

– Remove the camshaft and cover the open engine components.

Camshafts, Installing

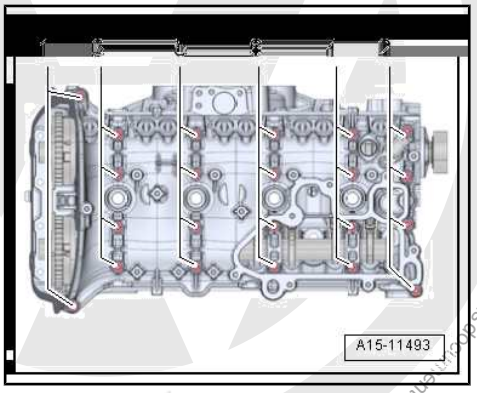

Note

- *Sealing surfaces must be completely free of oil and grease.*
- *Pay attention that all roller rocker levers rest on the valve stem ends.*

– If the crankshaft was turned in the meanwhile: bring the piston for cylinder 1 to TDC and then turn the crankshaft back just a little.

– Remove any sealant residue from the groove on the cylinder head cover as well as on the sealing surfaces.

– Clean the sealing surfaces. They must be free of oil and grease.

– Lubricate the running surfaces of both camshafts.

– Place the intake camshaft -A- in the cylinder head. Turn the cam lobes from cylinder 4 -arrows- upward.

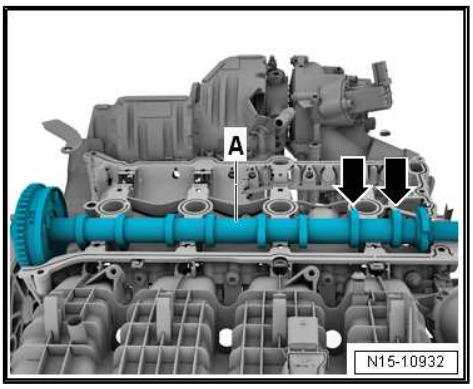

Protected by copyright. Copying for private or commercial purposes, in part or in whole, is not permitted unless authorised by Volkswagen AG. Copyright by Volkswagen AG. Liability with respect to the correctness of information in this document.

– Insert the exhaust camshaft -1- in the cylinder head cover. Turn the cam lobes from cylinder 4 -arrows- upward.

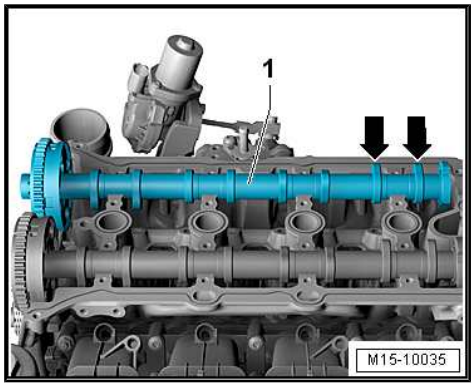

– Turn the intake camshaft -1- and the exhaust camshaft -2- until the markings -arrows- are in the -position shown-.

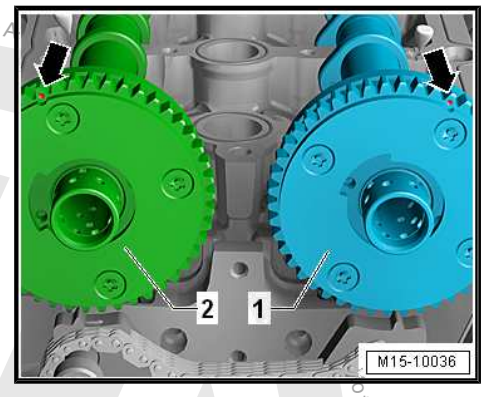

– The cams -arrows- the intake camshaft -1- and the exhaust camshaft -2- point upward as illustrated.

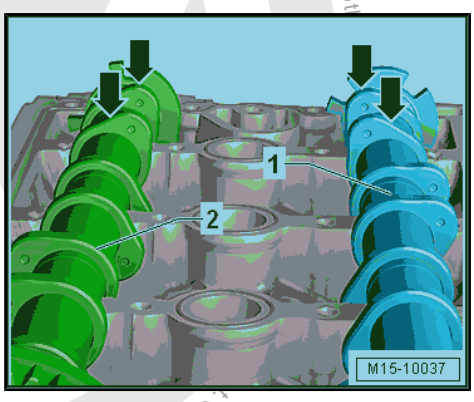

– Apply the sealant on the clean sealing surface of the cylinder head cover as illustrated -arrows-.

♦ Sealant bead thickness: 2 to 3 mm.

– Mount the cylinder head cover on the cylinder head.

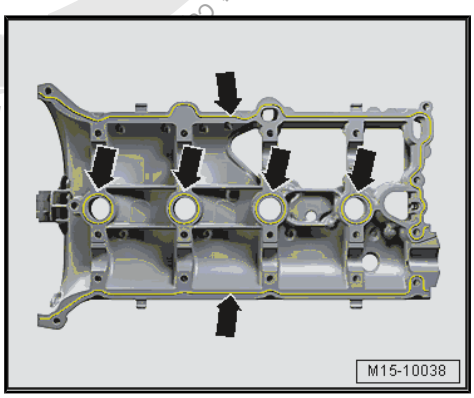

Protected by copyright. Copying for private or commercial purposes, in part or in whole, is not permitted unless authorised by Volkswagen AG.

– Lightly push on the cylinder head cover by hand and while doing this turn the camshaft slightly until the cylinder head cover lays free of tension on the cylinder head.

– Replace the cylinder head cover bolts.

– Tighten the bolts in several steps, tightening sequence. Refer to
⇒ Fig. ""Cylinder Head Cover Tightening Sequence"" , page 135 .

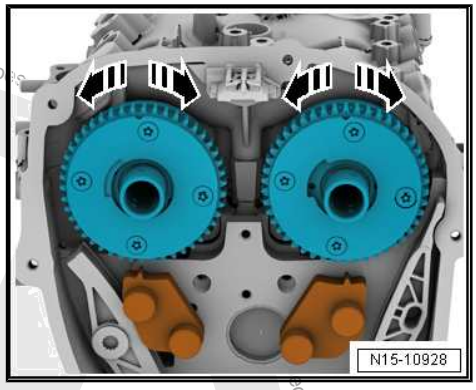

Note

Pay attention that the cylinder head cover is not tilted.

– Turn the intake camshaft with the Adapter - T40266- in the direction of -arrow A- until the markings -1 and 2- align. Push the Camshaft Lock - Component 2 - T40271/2- in the chain sprocket splines in direction of -arrow B-.

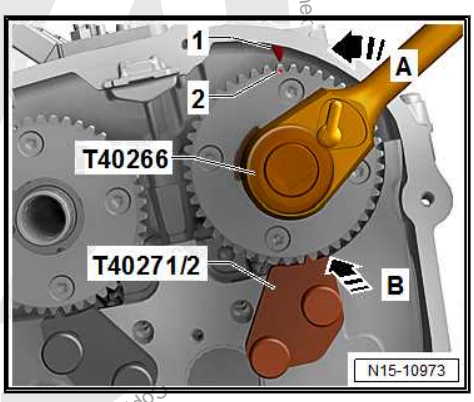

– Turn the exhaust camshaft with the Adapter - T40266- in the direction of -arrow A- until the markings -1 and 2- align. Push the Camshaft Lock - Component 1 - T40271/1- in the chain sprocket splines in direction of -arrow B-. The mark -2- is offset slightly to the right.

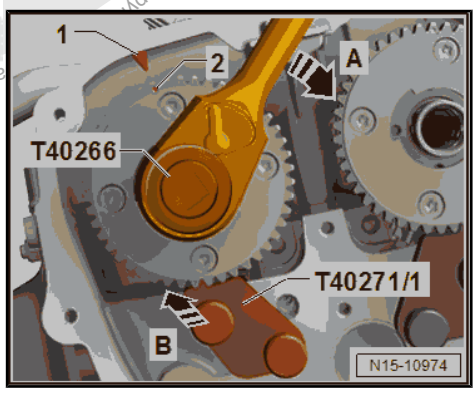

– Turn the crankshaft on the hex fitting to the "Top Dead Center (TDC) point". In the "TDC point" flat area -1- is upward.

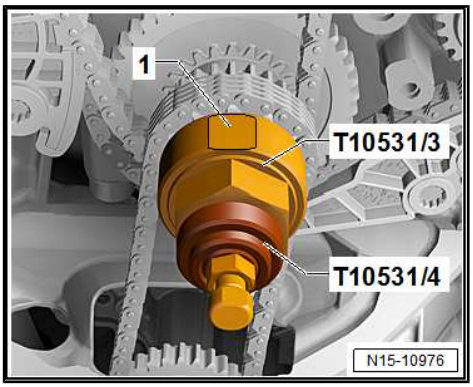

Install the Camshaft Timing Chain

– Engage the camshaft timing chain with the painted links -arrows- on the camshaft pins.

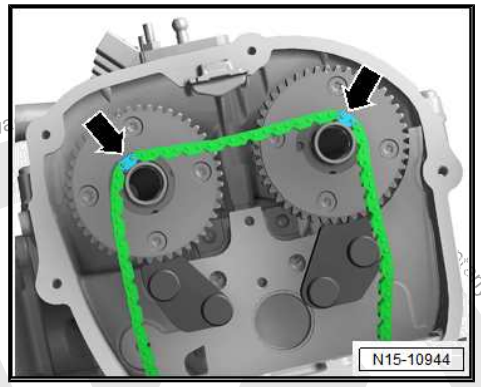

– Place the camshaft timing chain on the intake camshaft, exhaust camshaft and the crankshaft. Position the painted chain links -arrows- on the markings on the chain sprockets.

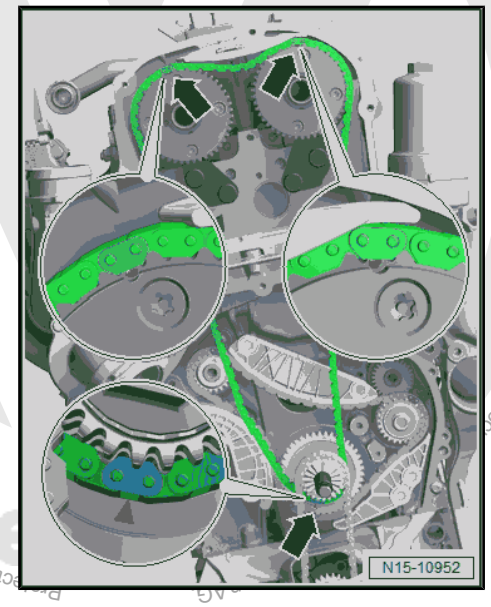

– Install the guide rail -2- and tighten the bolts -1-.

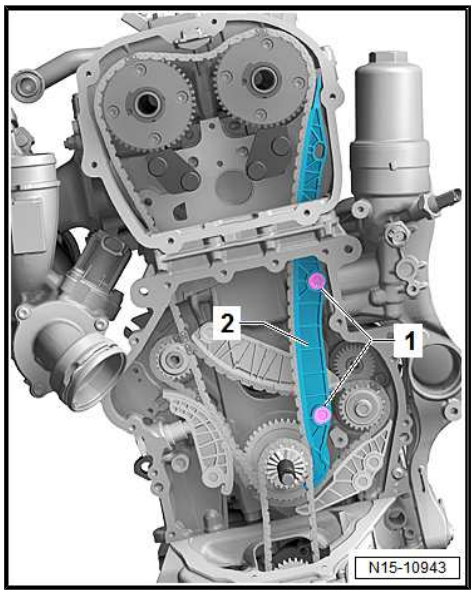

Protected by copyright. Copying for private or commercial purposes, in part or whole, is not permitted unless authorised by Volkswagen AG. No liability with respect to the correctness of information in this document.

– Install the upper glide rail -1-.

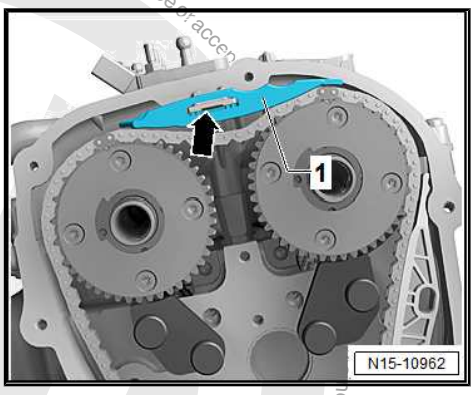

For the following steps a second technician is necessity.

I - Turn the exhaust camshaft with the Adapter - T40266- slightly in the direction of -arrow A- and push the Camshaft Lock - Component 1 - T40271/1- from the camshaft splines in direction of -arrow B-.

II - Release the camshaft in the direction -arrow C-, until the timing chain touches the glide rail -1-. Hold the camshaft in this position, install the tensioning rail -2- and tighten the bolts -3-. Release the camshaft.

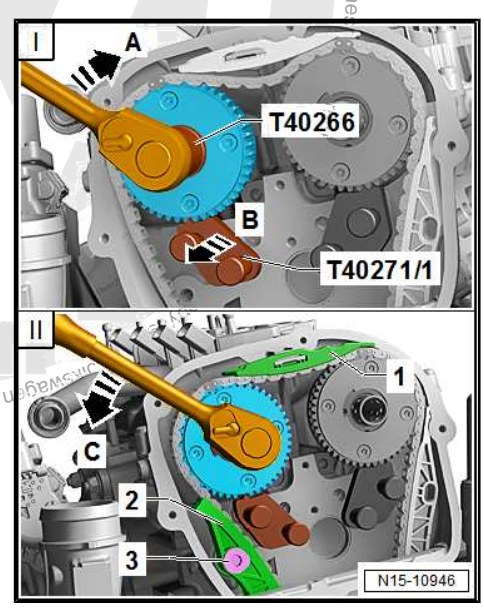

– Turn the intake camshaft with the Adapter - T40266- in the direction of -arrow 1- until the Camshaft Lock - Component 2 - T40271/2- can be pushed out of the chain sprocket splines in the direction of -arrow 2-. Release the camshaft.

– Remove the Camshaft Lock - Component 1 - T40271/1- and Camshaft Lock - Component 2 - T40271/2- .

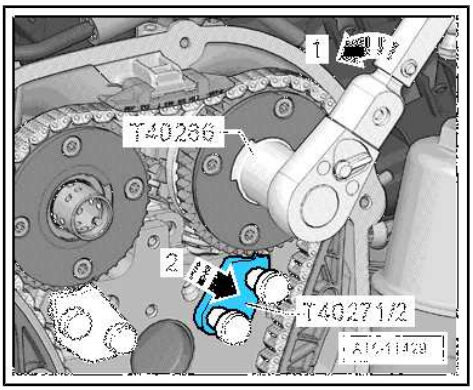

– Install the bolts -arrows- and tighten them. Tightening specification. Refer to -item 4- ⇒ Item 4 (page 91) .

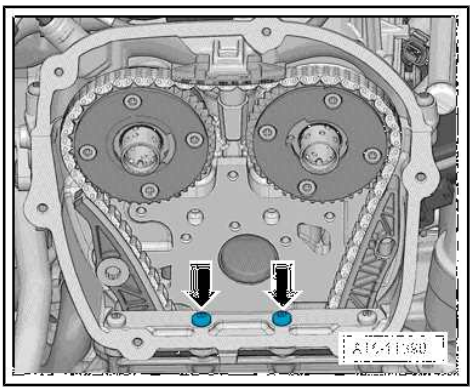

Protected by copyright. Copyright by Volkswagen AG. Volkswagen AG does not guarantee or accept any liability with respect to the correctness of information in this document. Copyright by Volkswagen AG. Volkswagen AG, in part or in whole, is not permitted unless authorised by Volkswagen AG. Volkswagen AG

– Attach the bearing mount. Do not tilt it when doing this. Hand-tighten the bolts -arrows-.

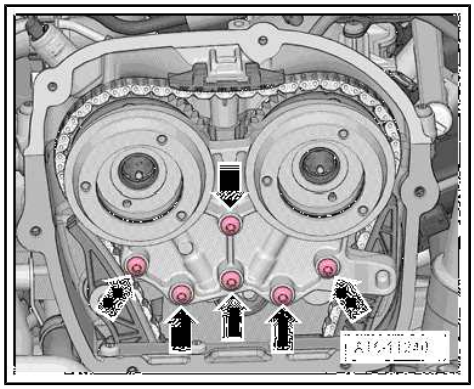

– Remove the Tensioner Locking Tool - T40267- .

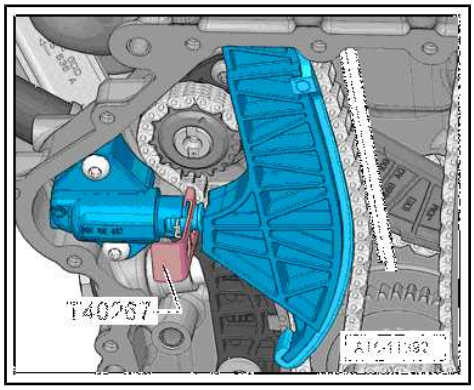

– Tighten the bearing bracket bolts -arrows-. Tightening specification -item 5- ⇒ Item 5 (page 115) .

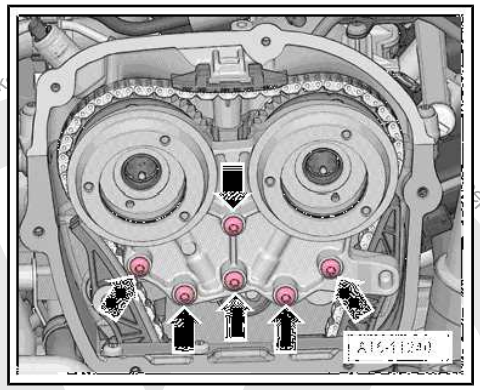

– Install the chain tensioner -2-. The wire clip must come in to contact with the oil pan upper section opening -arrow-. Tighten the bolt -1- and remove the Locking Pin (3 pc.) - T40011- .

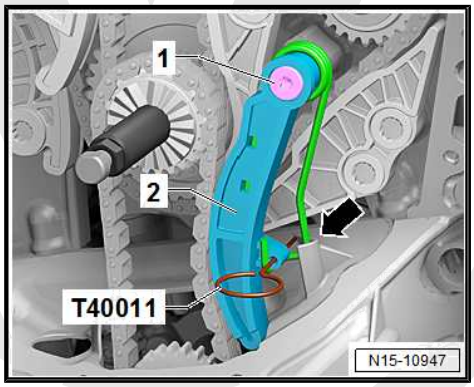

Protected by copyright. Copying for private or commercial purposes, in part or in whole, is not permitted unless authorised by Volkswagen AG. Copyright by Volkswagen AG. Volkswagen AG accepts any liability with respect to the correctness of information in this document.

– Check the adjustment. The painted chain links -arrows- must line up with the markings on the chain sprockets.
– Install the pilot valves -item 7- ⇒ Item 7 (page 115) .
– Let the engine turn a second time in the direction of engine rotation.

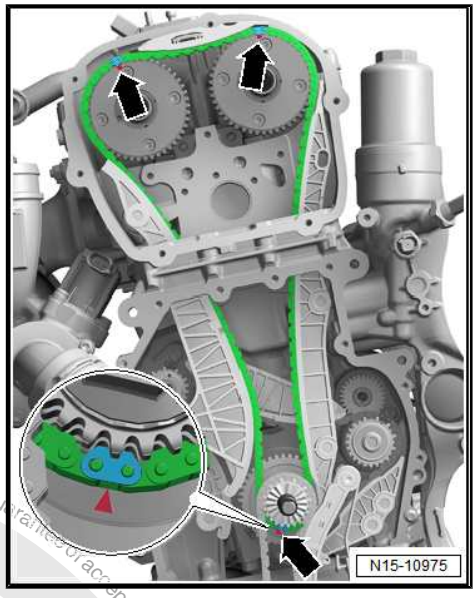

Note

Due to the ratio, the painted chain links no longer match up after the engine has been turned.

– Remove the Knurled Nut - T10531/4- and remove the Turning Over Tool - T10531/3- .
– Install the lower timing chain cover. Refer to ⇒ page 109 .

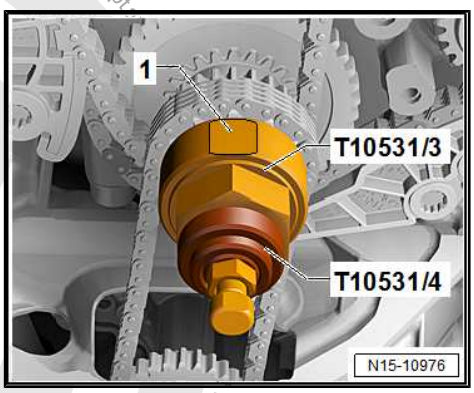

Protected by copyright. Copying for private or commercial purposes, in part or in whole, is not permitted unless authorised by Volkswagen AG. Volkswagen AG does not guarantee or accept any liability with respect to the correctness of information in this document. Copyright by Volkswagen AG.

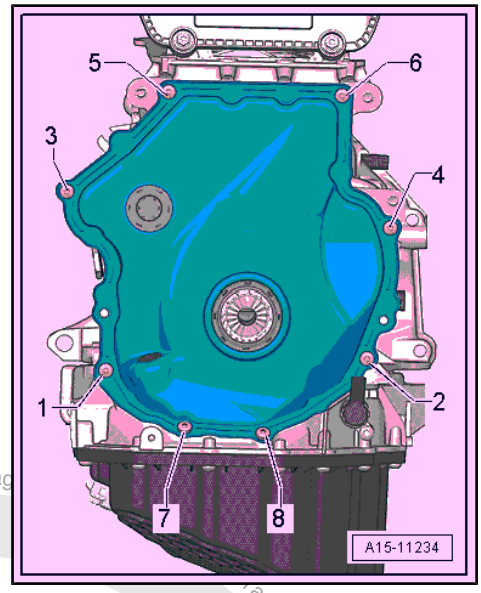

Note

Tighten the bolts -1 and 4- with an additional turn after installing the vibration damper. The bolts must be removed again to install the vibration damper.

– Install the vibration damper. Refer to ⇒ “1.4 Vibration Damper, Removing and Installing”, page 47 .

– Install the upper timing chain cover. Refer to ⇒ “2.2.1 Upper Timing Chain Cover, Removing and Installing”, page 106 .

– Install the ribbed belt tensioning damper. Refer to ⇒ “1.3 Ribbed Belt Tensioner, Removing and Installing”, page 47 .

– Install the ribbed belt. Refer to ⇒ “1.2 Ribbed Belt, Removing and Installing”, page 46 .

– Install the vacuum pump. Refer to ⇒ “1.4 Vacuum Pump, Removing and Installing”, page 100 .

– Install the high pressure pump. Refer to ⇒ “7.2 High Pressure Pump, Removing and Installing”, page 328 .

The rest of the installation is performed in reverse order of removal, noting the following:

– After performing work on the chain drive the adaptation value in the Engine Control Module (ECM) must be adapted. To do this turn on the ignition and select the following menu items on the Vehicle Diagnostic Tester :

- `01 - Engine Electronics`
- `Guided Functions`
- `01 - Adaptation After Repair Work on the Chain Drive`

Tightening Specifications

- Refer to ⇒ “3.1 Overview - Camshaft Timing Chain”, page 114 .
- Refer to ⇒ “3.2 Overview - Balance Shaft Drive Chain”, page 116 .
- Refer to ⇒ “4.1 Overview - Valvetrain”, page 133 .
- Refer to ⇒ “3.1 Overview - Air Filter Housing”, page 293 .
- Refer to ⇒ “7.1 Overview - High Pressure Pump”, page 325 .
- Refer to ⇒ Body Exterior; Rep. Gr. 66 ; Noise Insulation; Overview - Noise Insulation .

4.2.2 Camshaft, Removing and Installing, Engine Codes CNTA, CXCA, CXCB

Special tools and workshop equipment required

- Central Valve Assembly Tool - T10352-
- Counterhold - Vibration Damper - T10355-
- Chain Tensioner Lever - T40243-
- Tensioner Locking Tool - T40267-

Copyrighted by Volkswagen AG. Volkswagen AG does not accept any liability with respect to the correctness of information in this document. Copyright by Volkswagen AG.

- Camshaft Locks - T40271-
- Adapter - T40266-
- Sealant - D 154 103 A1-

Removing

Note

- *The sealing surfaces of the lower cylinder head cover and on the upper cylinder head must not be reworked.*
- *The camshaft bearings are integrated in the cylinder head or cylinder head cover. Before removing the cylinder head cover, release the tension on the camshaft timing chain.*
- *When installing, secure all cable ties back to same positions.*

– Remove the air filter housing. Refer to ⇒ "3.2 Air Filter Housing, Removing and Installing", page 294 .

– Remove the upper coolant pipe. Refer to ⇒ "3.3 Upper Coolant Pipes, Removing and Installing", page 242 .

– Remove the ignition coils. Refer to ⇒ "1.3 Ignition Coils with Power Output Stages, Removing and Installing", page 357 .

– Disconnect the connectors:

1 - For Turbocharger Recirculation Valve - N249-

2 - For Camshaft Position Sensor 3 - G300-

3 - For Fuel Pressure Regulator Valve - N276-

– Disconnect the connectors -arrows- from the cam adjustment actuator.

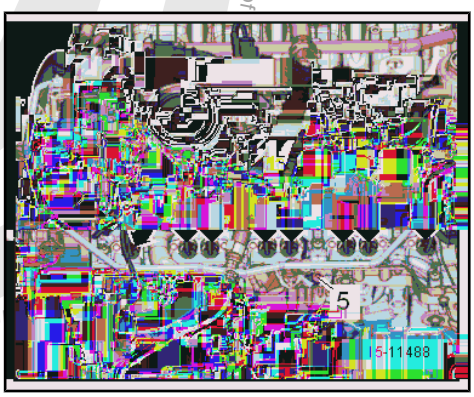

– Remove the bolt -5- and free up the ground cable.

– Free up the connector from the clip -4- and pivot it forward.

– Release the retainers in direction of -arrow-, remove the wiring duct upward from the bracket and move it towards the front.

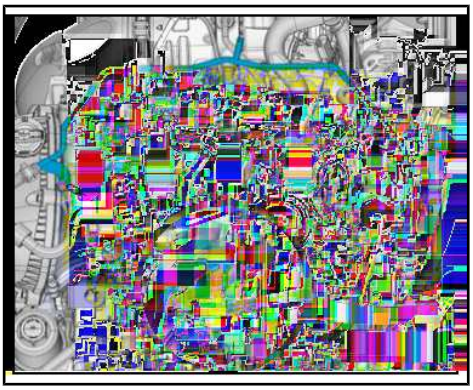

NOTICE

Risk of destroying the coolant pipes through deformation.

– **Never change the coolant pipe bent shape.**

– Remove bolts -1, 2 and 3-. Carefully swing coolant line backward slightly.

Protected by copyright. Copying for private or commercial purposes, in part or in whole, is not permitted unless authorised by Volkswagen AG. Volkswagen AG does not guarantee or accept any liability with respect to the correctness of

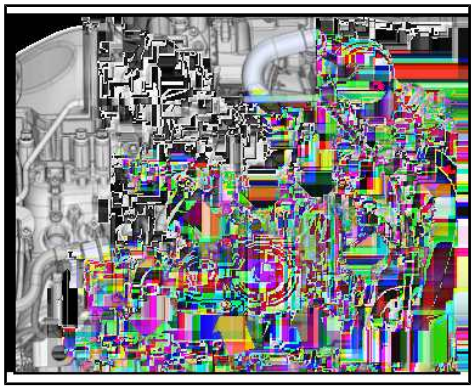

- Disconnect the connector -1- from the EVAP Canister Purge Regulator Valve 1 - N80- .
- Press the release button on the crankcase ventilation hose -2- and remove the hose.
- Remove the bolts -arrows- and the crankcase ventilation.
- Remove the high pressure pump. Refer to ⇒ “7.2 High Pressure Pump, Removing and Installing”, page 328 .
- Remove the vacuum pump. Refer to ⇒ “1.4 Vacuum Pump, Removing and Installing”, page 100 .
- Support the engine in its installed position. Refer to ⇒ “2.5 Engine, Supporting in Installed Position”, page 33 .
- Remove the engine bracket. Refer to ⇒ “2.2 Engine Mount, Removing and Installing”, page 30 .
- Remove the noise insulation. Refer to ⇒ Body Exterior; Rep. Gr. 66 ; Noise Insulation; Overview - Noise Insulation .
- Remove the right wheel housing liner front section. Refer to ⇒ Body Exterior; Rep. Gr. 66 ; Wheel Housing Liner; Front Wheel Housing Liner, Removing and Installing .
- Remove engine support. Refer to ⇒ “1.6 Engine Support, Removing and Installing”, page 55 .
- Remove timing chain upper cover. Refer to ⇒ “2.2.1 Upper Timing Chain Cover, Removing and Installing”, page 106 .
- Turn the vibration damper with the Counterhold - Vibration Damper - T10355- to the “TDC point”.

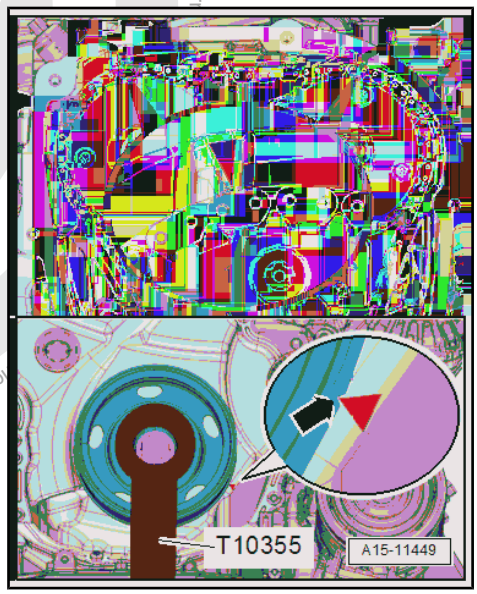

- The markings -1- on the camshaft chain sprockets must be opposite the markings -2 and 3-.
- The notch on the vibration damper and the marking on the lower cover for timing chain -arrow- must be opposite one another.
- Remove the lower timing chain cover. Refer to ⇒ “2.2.2 Lower Timing Chain Cover, Removing and Installing”, page 108 .

Note

The pilot valve has left-hand threads.

- Remove the left and right pilot valves using the Assembly Tool - T10352/2- in the direction of -arrow-.

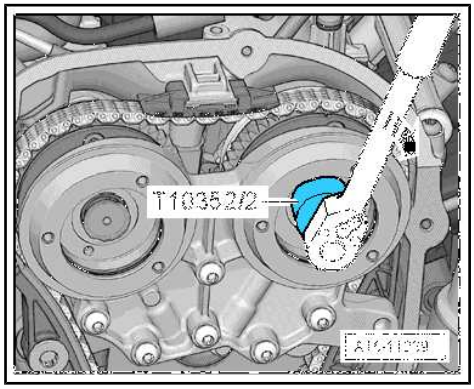

Protected by copyright. Copying for private or commercial purposes, in part or in whole, is not permitted unless authorised by Volkswagen AG. Volkswagen AG does not guarantee or accept any liability with respect to the con

– Remove the bolts -arrows- and remove the bearing bracket.

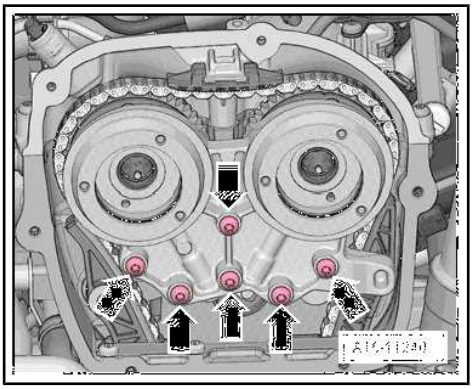

– Remove the bolts -arrows-.

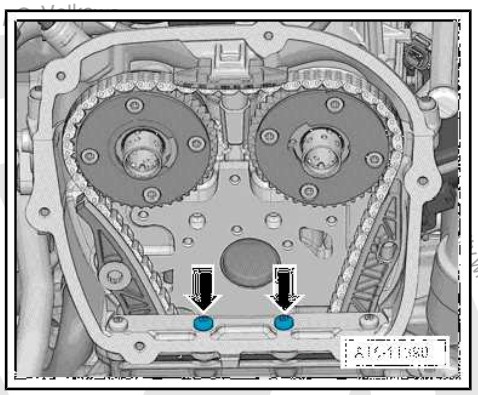

– Install the Chain Tensioner Lever -T40243- -arrows-.
– Press the chain tensioner locking ring -1- together and hold it.
– Slowly press and hold the Chain Tensioner Lever - T40243- in the direction of -arrow-.

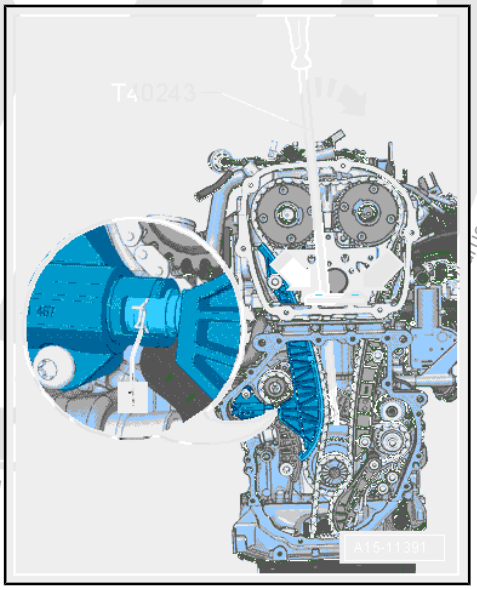

– Secure the chain tensioner with the Tensioner Locking Tool - T40267- .
– Remove the Chain Tensioner Lever - T40243- .

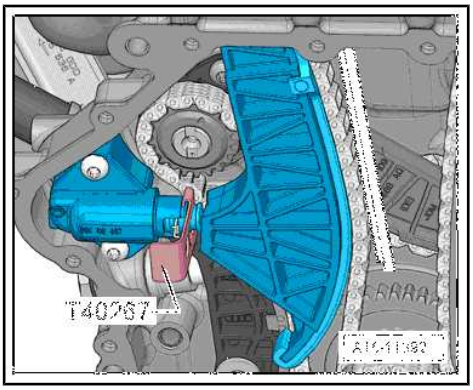

Protected by copyright. Copying for private or commercial purposes, in part or in whole, is not permitted unless authorised by Volkswagen AG. Volkswagen AG does not guarantee or accept any liability with respect to the correctness of information.

– Bolt the Camshaft Lock - Component 2 - T40271/2- to the cylinder head and slide into the splines on the chain sprocket in the direction of -arrow 2-. Rotate the intake camshaft with the Adapter - T40266- -1- if necessary.

– Install the Camshaft Lock - Component 1 - T40271/1- on the cylinder head.

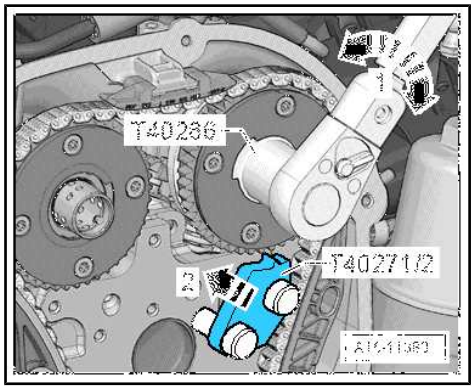

For the following steps a second technician is necessity.

– Hold the exhaust camshaft with the Adapter - T40266- in the direction of -arrow A-. Remove the bolt -1- and guide the tensioning rail -2- downward. Turn the camshaft further in a clockwise direction -arrow A- until the Camshaft Lock - Component 1 - T40271/1- can be slid into the chain sprocket splines in direction of -arrow B-.

– Check the installation position -arrow C- of the Camshaft Lock - Component 1 - T40271/1- .

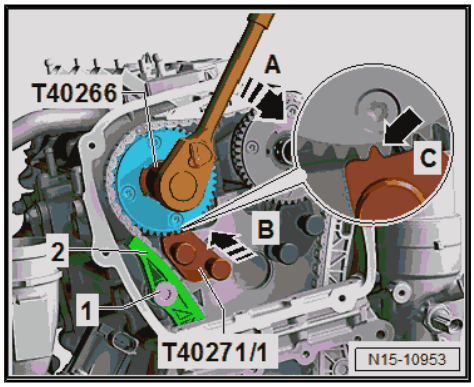

– Remove the guide rail -1- by unlocking the latch -arrow- with a screwdriver and pushing the guide rail forward.

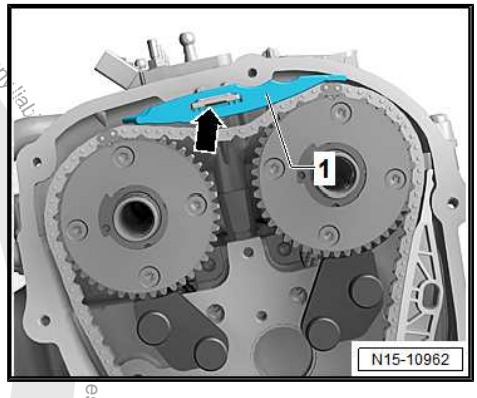

– Press the oil pump chain tensioner bracket in direction of -arrow- and lock with Locking Pin (3 pc.) - T40011- .

– Remove the bolt -1- and remove the chain tensioner.

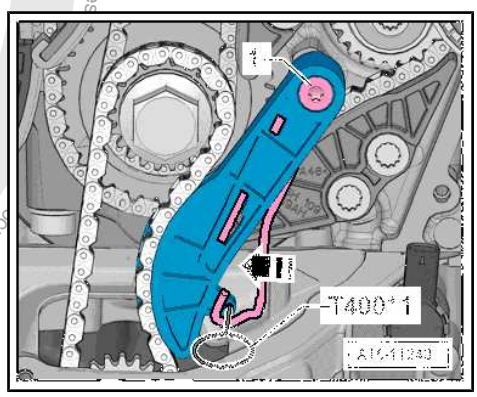

Protected by copyright. Copyright for private or commercial purposes, in part or in whole, is not permitted unless authorised by Volkswagen AG. Volkswagen AG does not guarantee or accept any liability with respect to the correctness of information in this document. Copyright by Volkswagen AG.

– Remove the bolts -1- and remove the glide rail -2-.

– Remove the camshaft timing chain from the camshaft bearing and guide downward.

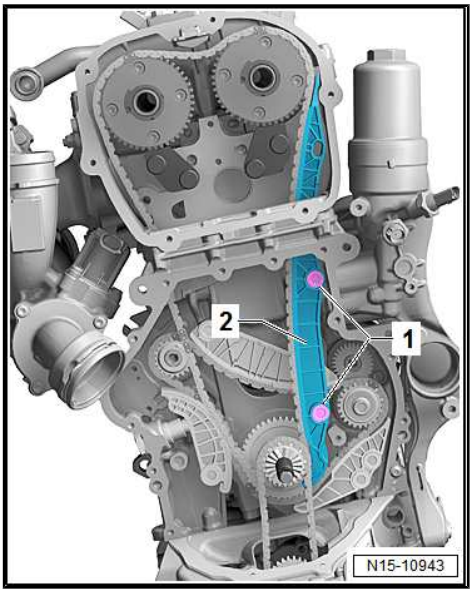

– Install the Assembly Tool - Turning Over Tool - T10531/3- . In the “TDC point” the flat area -1- points upward. Install the Assembly Tool - Knurled Nut - T10531/4- . Turn the crankshaft with a 32 mm open end wrench counter-clockwise out of “TDC”.

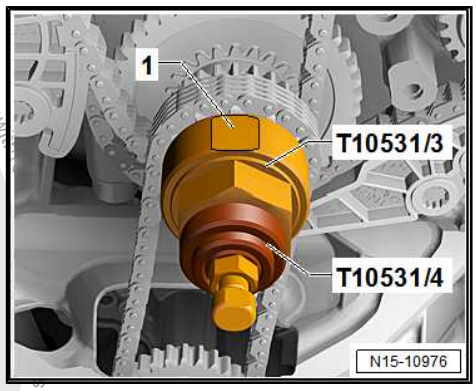

– Turn the intake camshaft in the direction of the -arrow 1- using the Adapter - T40266- . Slide the Camshaft Lock - T40271/2- -2- out of the chain sprocket splines and bring the camshaft into the rest position.

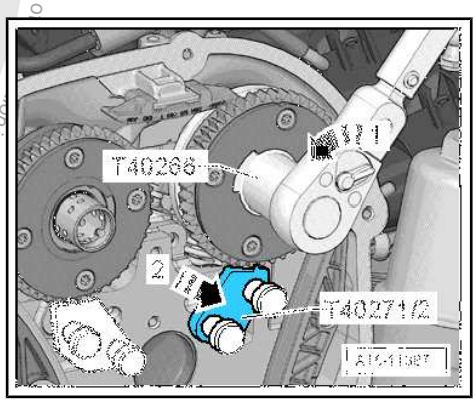

– Turn the exhaust camshaft in the direction of the -arrow 1- using the Adapter - T40266- . Slide the Camshaft Lock - T40271/1- -2- out of the chain sprocket splines and bring the camshaft into the rest position.

– Remove the cylinder head cover bolts -1 to 6- in sequence.

– Remove the cylinder head cover.

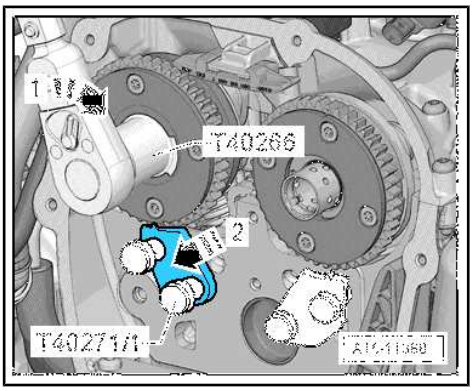

Protected by copyright. Copyright by Volkswagen AG. Copying for private or commercial purposes, in part or in whole, is not permitted unless authorised by Volkswagen AG. Volkswagen AG does not guarantee or accept any liability with respect to the correctness of information in this document.

– Remove the camshaft and cover the open engine components.

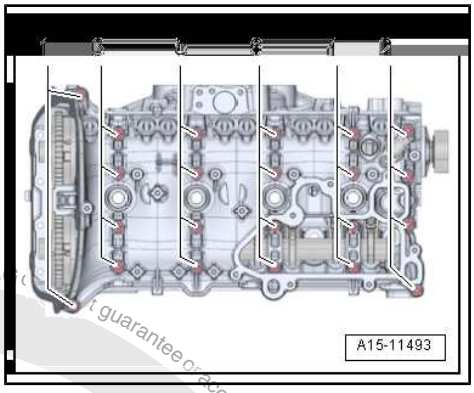

Camshafts, Installing

Note

- *Sealing surfaces must be completely free of oil and grease.*
- *Pay attention that all roller rocker levers rest on the valve stem ends.*

– If the crankshaft was turned in the meanwhile: bring the piston for cylinder 1 to Top Dead Center (TDC) and then turn the crankshaft back just a little.

– Remove any sealant residue from the groove on the cylinder head cover as well as on the sealing surfaces.

– Clean the sealing surfaces. They must be free of oil and grease.

– Lubricate the running surfaces of both camshafts.

– Place the intake camshaft -A- in the cylinder head. Turn the cam lobes from cylinder 4 -arrows- upward.

– Check if the valve lifters for the cam adjustment actuators are retracted.

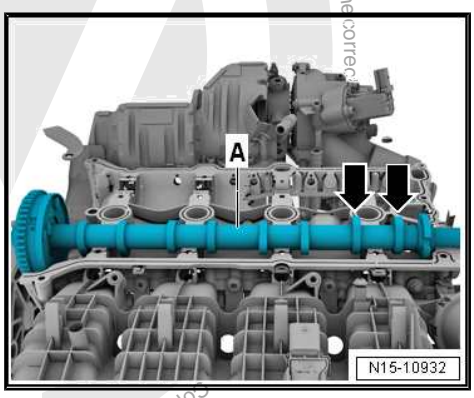

– Place the exhaust camshaft in the cylinder head cover as illustrated. The cam pair -A and B- must be pushed together.

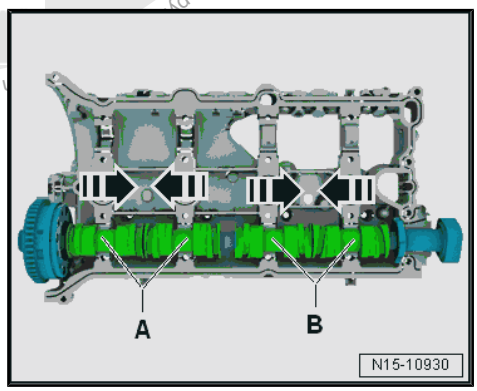

– Turn the exhaust camshaft until the markings -A and B- align.

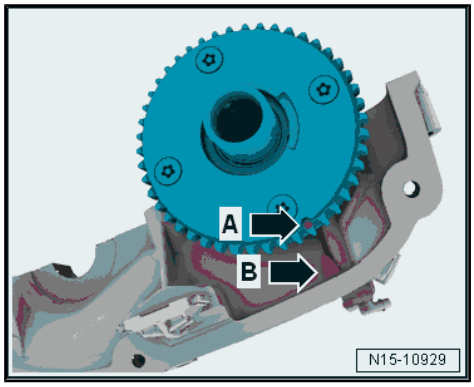

Protected by copyright. Copying for private or commercial purposes, in part or in whole, is not permitted unless authorised by Volkswagen AG. Volkswagen AG does not guarantee or accept any liability with respect to the correct

– Apply the sealant on the clean sealing surface of the cylinder head cover as illustrated -arrows-.

♦ Sealant bead thickness: 2 to 3 mm.

– Secure the camshaft and place the cylinder head cover with the camshaft on the cylinder head.

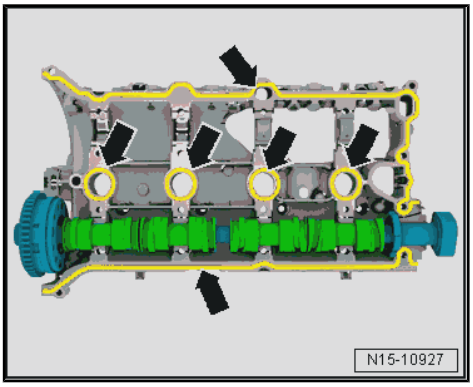

– Lightly push on the cylinder head cover by hand and while doing this turn the camshaft slightly until the cylinder head cover lays free of tension on the cylinder head.

– Replace the cylinder head cover bolts.

– Tighten the bolts in several steps, tightening sequence. Refer to
⇒ Fig. ""Cylinder Head Cover Tightening Sequence"", page 135 .

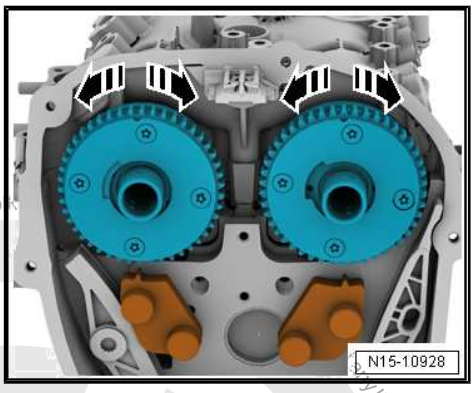

Note

Pay attention that the cylinder head cover is not tilted.

– Turn the intake camshaft with the Adapter - T40266- in the direction of the -arrow A- until the markings -1 and 2- align. Push the Camshaft Lock - Component 2 - T40271/2- in the chain sprocket splines in direction of -arrow B-.

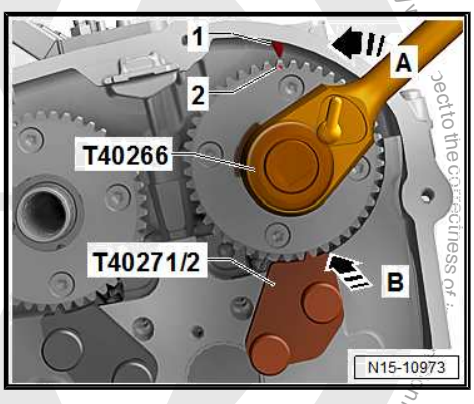

– Turn the exhaust camshaft with the Adapter - T40266- in the direction of -arrow A- until the markings -1 and 2- align. Push the Camshaft Lock - Component 1 - T40271/1- in the chain sprocket splines -B-. The mark -2- is offset slightly to the right.

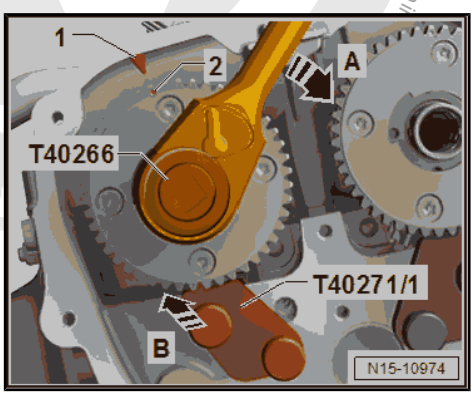

Protected by copyright. Copying for commercial purposes, in part or whole, is not permitted unless authorised by Volkswagen AG. Volkswagen AG does not guarantee or accept any liability with respect to the correctness of information in this document.

– Turn the crankshaft on the hex fitting to the “TDC point”. In the “TDC point” flat area -1- is upward.

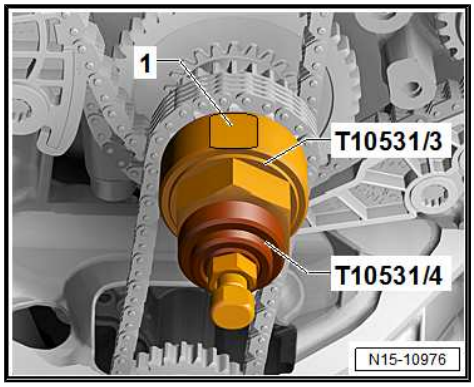

Install Camshaft Timing Chain

– Engage the camshaft timing chain with the painted links -arrows- on the camshaft pins.

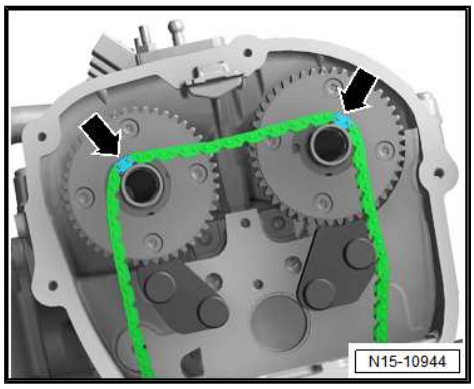

– Place the camshaft timing chain on the intake camshaft, exhaust camshaft and the crankshaft. Position the painted chain links -arrows- on the markings on the chain sprockets.

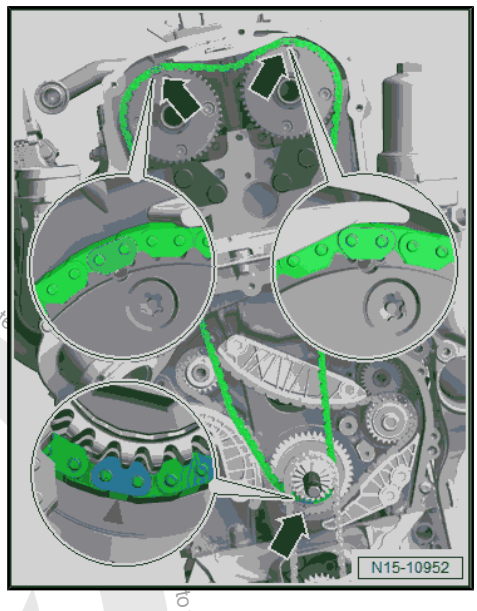

Protected by copyright. Copying for private or commercial purposes, in part or in whole, is not permitted unless authorised by Volkswagen AG. Volkswagen AG does not guarantee the correctness of information in this document. Copyright by Volkswagen AG.

– Install the guide rail -2- and tighten the bolts -1-.

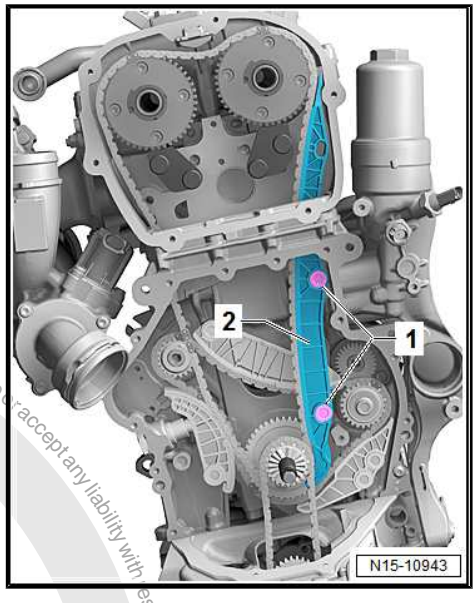

– Install the upper glide rail -1-.

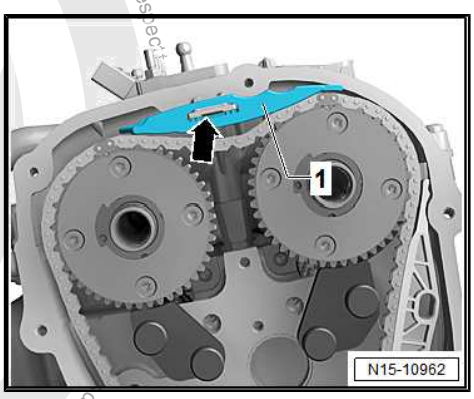

For the following steps a second technician is necessity.

I - Turn the exhaust camshaft with the Adapter - T40266- slightly in the direction of -arrow A- and push the Camshaft Lock - Component 1 - T40271/1- from the camshaft splines in the direction of -arrow B-.

II - Release the camshaft in the direction of -arrow C-, until the timing chain touches the glide rail -1-. Hold the camshaft in this position, install the tensioning rail -2- and tighten the bolts -3-. Release the camshaft.

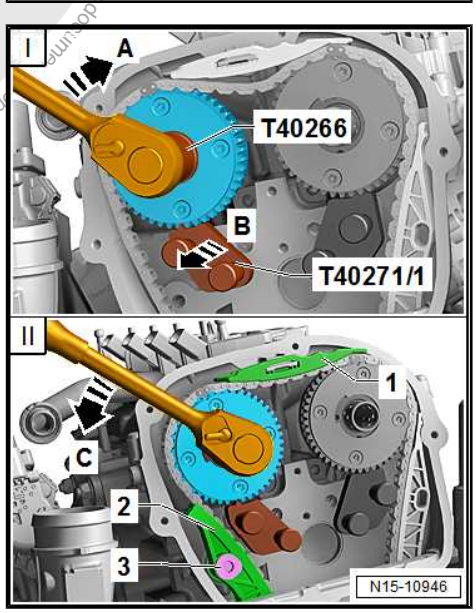

Protected by copyright. Copying for private or commercial purposes, in part or in whole, is not permitted unless authorised by Volkswagen AG. Volkswagen AG does not guarantee or accept any liability with respect to the correctness of information in this document. Copyright by Volkswagen AG.

– Turn the intake camshaft with the Adapter - T40266- in the direction of -arrow 1- until the Camshaft Lock - Component 2 - T40271/2- can be pushed out of the chain sprocket splines in the direction of -arrow 2-. Release the camshaft.

– Remove the Camshaft Lock - Component 1 - T40271/1- and Camshaft Lock - Component 2 - T40271/2- .

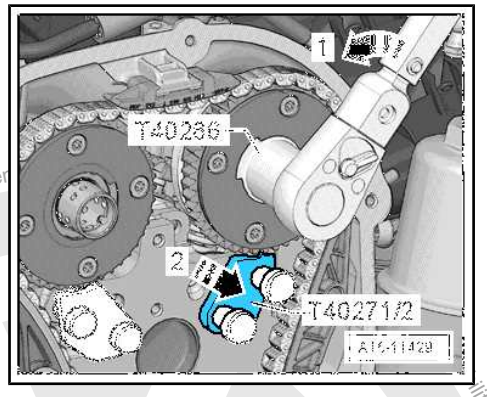

– Install the bolts -arrows- and tighten them. Tightening specification. Refer to -item 4- ⇒ Item 4 (page 91) .

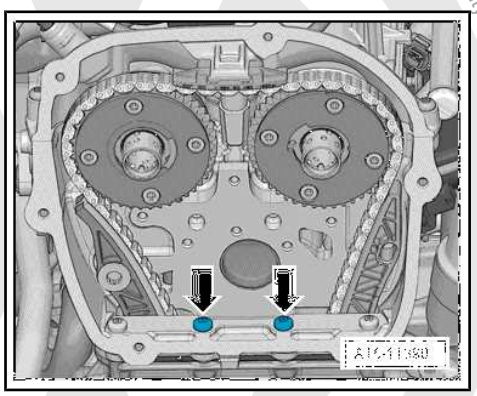

– Attach the bearing mount. Do not tilt it when doing this. Hand-tighten the bolts -arrows-.

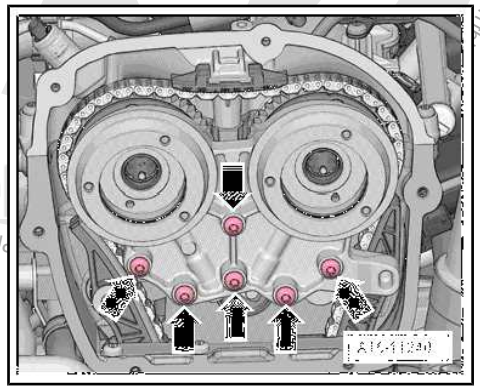

– Remove the Tensioner Locking Tool - T40267- .

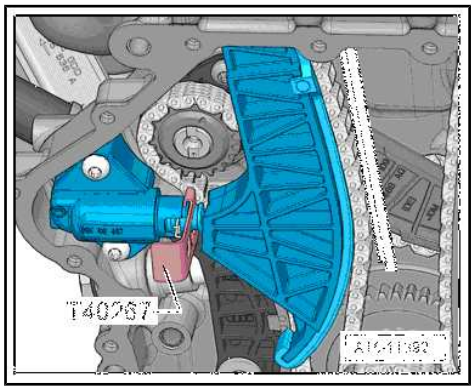

Protected by copyright. Copying for private or commercial purposes, in part or in whole, is not permitted unless authorised by Volkswagen AG. No liability with respect to the correctness of information in this

– Tighten the bearing bracket bolts -arrows-. Tightening specification. Refer to
⇒ “3.1 Overview - Camshaft Timing Chain”, page 114 .

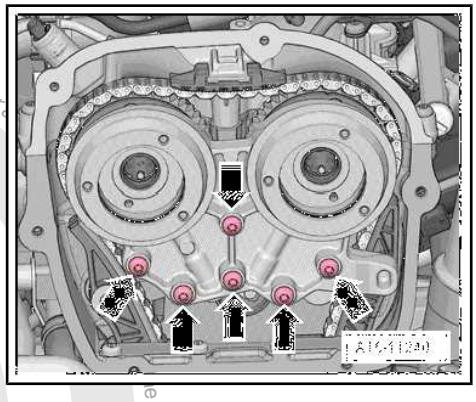

– Install the chain tensioner -2-. The wire clip must come in to contact with the oil pan upper section opening -arrow-. Tighten the bolt -1- and remove the Locking Pin (3 pc.) - T40011- .

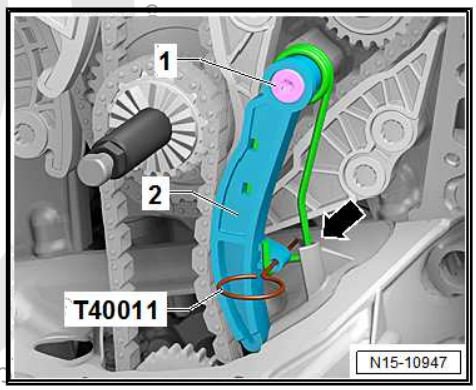

– Check the adjustment. The painted chain links -arrows- must line up with the markings on the chain sprockets.
– Install the pilot valves -item 6- ⇒ Item 7 (page 115) .
– Let the engine turn a second time in the direction of engine rotation.

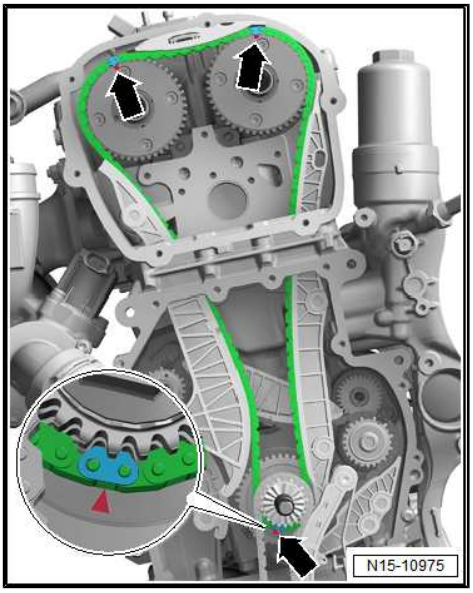

Note

Due to the ratio, the painted chain links no longer match up after the engine has been turned.

– Remove the Assembly Tool - Knurled Nut - T10531/4- and remove the Assembly Tool - Turning Over Tool - T10531/3- .
– Install the lower timing chain cover. Refer to ⇒ page 109 .

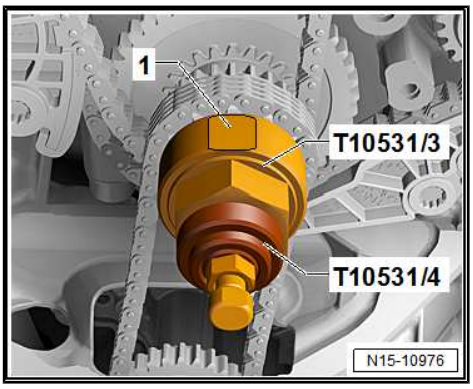

Copyright Volkswagen AG. Volkswagen AG does not guarantee or accept any liability with respect to the correctness and completeness of this document. Copying for private or commercial purposes, in part or in whole, is not permitted unless authorised by Volkswagen AG. Protected by copyright.

Note

Tighten the bolts -1 and 4- with an additional turn after installing the vibration damper. The bolts must be removed again to install the vibration damper.

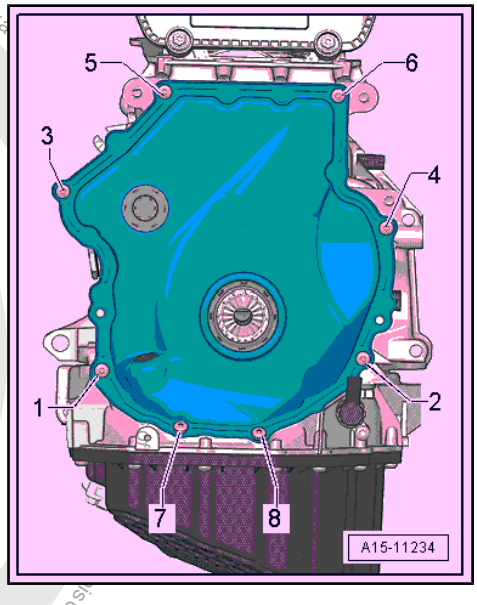

- Install the vibration damper. Refer to ⇒ “1.4 Vibration Damper, Removing and Installing”, page 47 .
- Install the upper timing chain cover. Refer to ⇒ “2.2.1 Upper Timing Chain Cover, Removing and Installing”, page 106 .
- Install the ribbed belt tensioning damper. Refer to ⇒ “1.3 Ribbed Belt Tensioner, Removing and Installing”, page 47 .
- Install the ribbed belt. Refer to ⇒ “1.2 Ribbed Belt, Removing and Installing”, page 46 .
- Install the vacuum pump. Refer to ⇒ “1.4 Vacuum Pump, Removing and Installing”, page 100 .
- Install the high pressure pump. Refer to ⇒ “7.2 High Pressure Pump, Removing and Installing”, page 328 .

The rest of the installation is performed in reverse order of removal, noting the following:

- After performing work on the chain drive the adaptation value in the Engine Control Module (ECM) must be adapted. To do this turn on the ignition and select the following menu items on the Vehicle Diagnostic Tester :

◆ `01 - Engine Electronics`

◆ `Guided Functions`

◆ `01 - Adaptation After Repair Work on the Chain Drive`

Tightening Specifications

◆ Refer to ⇒ “3.1 Overview - Camshaft Timing Chain”, page 114 .

◆ Refer to ⇒ “3.2 Overview - Balance Shaft Drive Chain”, page 116 .

◆ Refer to ⇒ “4.1 Overview - Valvetrain”, page 133 .

◆ Refer to ⇒ “3.1 Overview - Air Filter Housing”, page 293 .

◆ Refer to ⇒ “7.1 Overview - High Pressure Pump”, page 325 .

◆ Refer to ⇒ Body Exterior; Rep. Gr. 66 ; Noise Insulation; Overview - Noise Insulation .

4.3 Camshaft Adjustment Valve 1 - N205- , Removing and Installing

Caution

This procedure contains mandatory replaceable parts. Refer to component overview prior to starting procedure.

Mandatory Replacement Parts

- Bolts - Camshaft Adjustment Valve 1
- O-ring - Camshaft Adjustment Valve 1
- Seal - Camshaft Adjustment Valve 1

Removing

– Remove the engine cover. Refer to ⇒ “3.1 Engine Cover, Removing and Installing”, page 38 .

– Unclip the coolant and fuel lines and set them aside.

– Disconnect the connector -1- from the Camshaft Adjustment Valve 1 - N205- .

– Remove the bolts -arrows- and then the Camshaft Adjustment Valve 1 - N205- -2-.

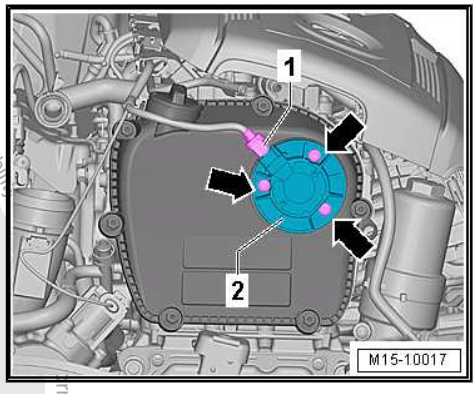

Installing

Install in reverse order of removal. Note the following:

Note

Replace seals and O-rings.

– Lubricate seals on the Camshaft Adjustment Valve 1 - N205- / Exhaust Camshaft Adjustment Valve 1 - N318- sealing surfaces with engine oil.

Tightening Specifications

- Refer to ⇒ “2.1 Overview - Timing Chain Cover”, page 104 .

4.4 Camshaft Adjustment Valve 1 - N205- and Exhaust Camshaft Adjustment Valve 1 - N318- , Removing and Installing

Caution

This procedure contains mandatory replaceable parts. Refer to component overview prior to starting procedure.

Mandatory Replacement Parts

- Bolts - Camshaft Adjustment Valve 1
- O-ring - Camshaft Adjustment Valve 1
- Seal - Camshaft Adjustment Valve 1
- Bolts - Exhaust Camshaft Adjustment Valve 1
- O-ring - Exhaust Camshaft Adjustment Valve 1
- Seal - Exhaust Adjustment Valve 1

Removing

– Remove connector -1- from Exhaust Camshaft Adjustment Valve 1 - N318- and connector -3- from Camshaft Adjustment Valve 1 - N205- .

Copyright by Volkswagen AG. Volkswagen AG does not guarantee or accept any liability for the correctness of information in this document. Copying for private or commercial purposes, in part or in whole, is not permitted unless authorized by Volkswagen AG.

– Remove the bolts -arrows- and Camshaft Adjustment Valve 1 - N205- -4- and Exhaust Camshaft Adjustment Valve 1 - N318- -2-.

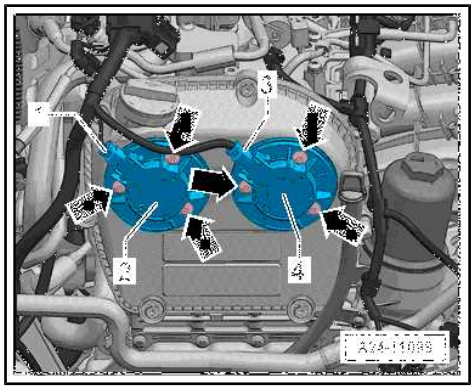

Installing

Install in reverse order of removal. Note the following:

Note

Replace seals and O-rings.

– Lubricate seals on the Camshaft Adjustment Valve 1 - N205- / Exhaust Camshaft Adjustment Valve 1 - N318- sealing surfaces with engine oil.

Tightening Specifications

♦ Refer to ⇒ “2.1 Overview - Timing Chain Cover”, page 104 .

4.5 Sliding Bar Ball, Installing

Special tools and workshop equipment required

♦ Camshaft Spacer - T40191-

Installing

CAUTION

Risk of injuring the eyes due to the sliding ball bar springing out.
– Wear protective eyewear.

– Insert the spring -1- in the camshaft.

– Place the ball -2- on the spring in the camshaft.

– Push the ball and spring downward in direction of -arrow A- using the Camshaft Spacer - T40191/1- and hold.

– Push the sliding bar -3- in the direction of -arrow B-.

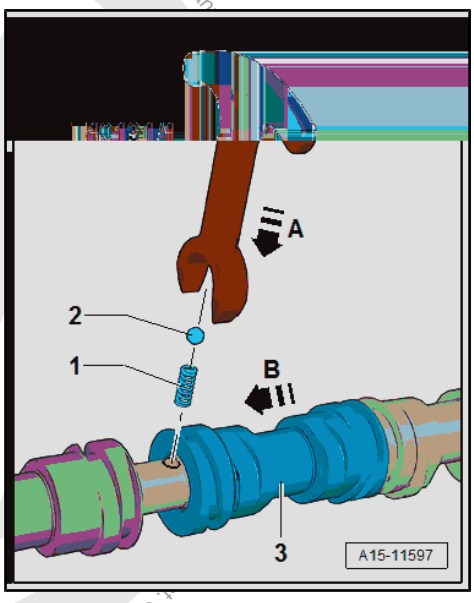

Protected by copyright. Copying for private or commercial purposes, in part or whole, is not permitted unless authorised by Volkswagen AG. Volkswagen AG does not guarantee or accept any liability with respect to the correctness of information in this document. Copyright by Volkswagen AG.

4.6 Valve Stem Seals, Removing and Installing

⇒ “4.6.1 Valve Stem Seals, Removing and Installing, Cylinder Head Installed”, page 163 .

⇒ “4.6.2 Valve Shaft Seals, Removing and Installing, Cylinder Removed”, page 166 .

4.6.1 Valve Stem Seals, Removing and Installing, Cylinder Head Installed

Special tools and workshop equipment required

- Spark Plug Removal Tool - 3122B-
- Puller - Valve Seal - 3364-
- Seal Installer - Valve Stem - 3365-
- Valve Cotter Tool Kit - Adapter - T40012-
- Torque Wrench 1331 5-50Nm - VAG1331-
- Valve Keeper Tool Kit - VAS5161A-
- Valve Cotter Tool Kit - Guide Plate 19B - VAS5161/19B-
- Valve Cotter Tool Kit Knurled Thumb Screws M6 - VAS5161/12-
- Punch - VAS5161/3A-

Remove Valve Stem Seals

– Remove the camshafts. Refer to ⇒ “4.2 Camshaft, Removing and Installing”, page 136 .

– Mark the allocation of the roller rocker lever and the hydraulic adjusting elements so they can be installed again.

– If necessary, remove the roller rocker levers with the hydraulic adjusting elements and place them on a clean surface.

– Remove the spark plugs using a Spark Plug Removal Tool - 3122B- .

– Install the Valve Cotter Tool Kit - Guide Plate 19B - VAS5161/19B- with the Valve Cotter Tool Kit Knurled Thumb Screws M6 - VAS5161/12- as shown on the cylinder head.

– Move piston for that cylinder to “bottom dead center position”.

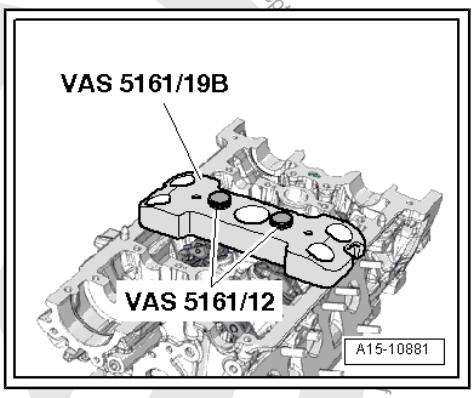

Protected by copyright. Copying for private or commercial purposes, in part or in whole, is not permitted unless authorised by Volkswagen AG. Volkswagen AG does not guarantee or accept any guarantee for the accuracy of information in this document. Copyright by Volkswagen AG.

– Install the Valve Cotter Tool Kit - Adapter - T40012- in the spark plug threads.
– Connect compressed air with at least 6 bar (87 psi) pressure.
– Loosen stuck valve retainers using a Punch - VAS5161/3A- and a plastic hammer.

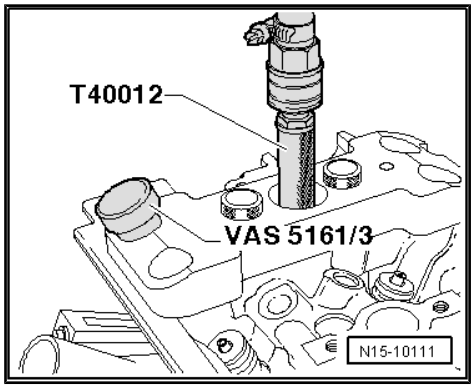

For Intake Side

– Install the Valve Cotter Tool Kit - Retainer - VAS5161/6- with Valve Cotter Tool Kit - Guide Forks M6/M8 Threaded - VAS5161/5- in the center thread of the Valve Cotter Tool Kit - Guide Plate 19B - VAS5161/19B- .
– Place the Valve Cotter Tool Kit - Assembly Cartridge - VAS5161/8- in the Valve Cotter Tool Kit - Guide Plate 19B - VAS5161/19B- .
– Engage the Pressure Fork With Lever for Assembly Cartridge - VAS5161/2- on the Retainer - VAS5161/6- .

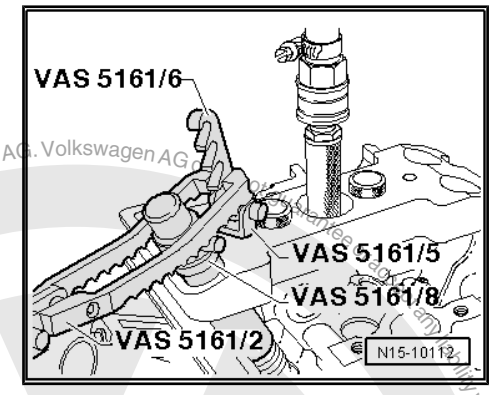

For Exhaust Side

– Install the Valve Cotter Tool Kit - Retainer - VAS5161/6- with Valve Cotter Tool Kit - Guide Forks M6/M8 Threaded - VAS5161/5- in the outer thread of the Valve Cotter Tool Kit - Guide Plate 19B - VAS5161/19B- .
– Press down the Assembly Cartridge - VAS5161/8A- and at the same time turn the knurled thumb screw on the Assembly Cartridge - VAS5161/8A- to the right until the points engage in the valve retainers.
– Move the knurled thumb screw back and forth slightly. This presses the valve retainers apart and captures them in the installation cartridge.
– Release the Pressure Fork With Lever For Assembly Cartridge - VAS5161/2- .
– Remove the Assembly Cartridge - VAS5161/8A- .

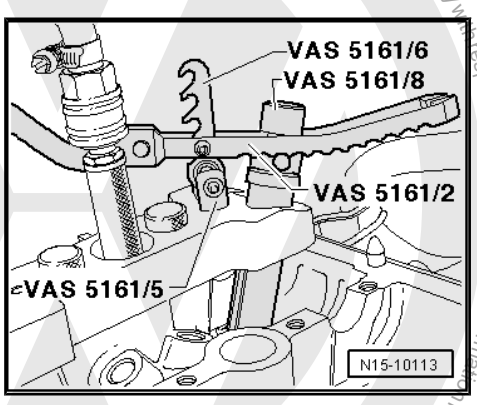

Protected by copyright. Copying for private or commercial purposes, in part or in whole, is not permitted unless authorised by Volkswagen AG. Volkswagen AG does not guarantee or assume any liability with respect to the correctness of information in this document. Copyright by Volkswagen AG.

– Remove the valve stem seals using Puller - Valve Seal - 3364- .

– If the Puller - Valve Seal - 3364- cannot be used because there is not enough space, drive the roll pin -arrow- out using a drift and remove the impact attachment.

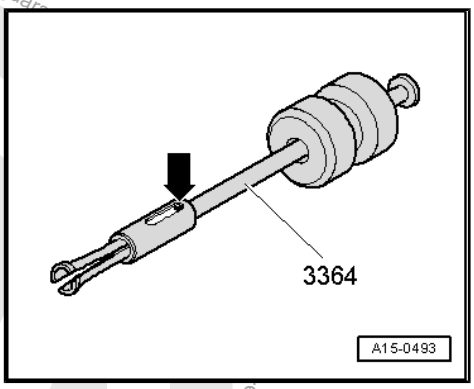

– Position the lower part of the Puller - Valve Seal - 3364- on the valve stem seal.
– Place the drift -1- in the hole in the lower section of the removal tool.
– Position the lever on the removal tool and remove the valve stem seal in direction of -arrow-.

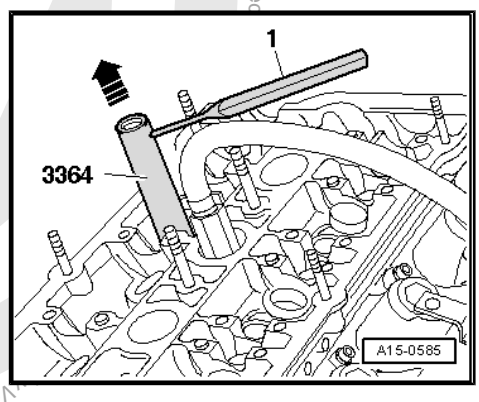

Protected by copyright. Copying for private or commercial purposes, in part or in whole, is not permitted unless authorised by Volkswagen AG. Volkswagen AG does not guarantee

Install Valve Stem Seals

– Place the plastic sleeve -A- that is attached to valve stem seals -B- on valve stem.
– Lightly oil the valve stem seal.
– Slide the valve stem seal onto the plastic sleeve.
– Carefully press the valve stem seal onto the valve guide with the Seal Installer - Valve Stem - 3365- .
– Remove plastic sleeve.
– Insert the valve spring and valve spring plate.
– Connect the Valve Keeper Tool Kit - VAS5161A- as illustrated.

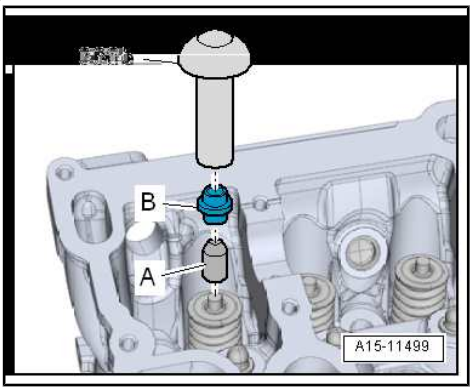

Intake Side

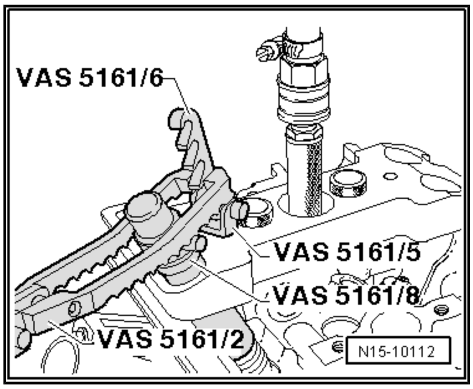

Exhaust Side

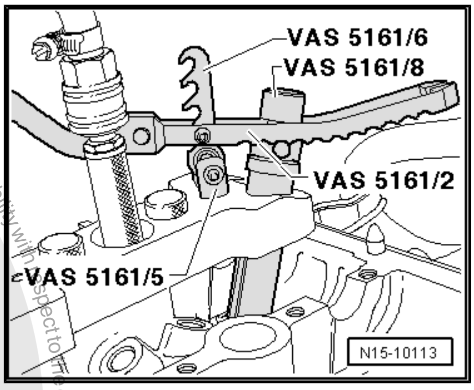

Protected by copyright. Copying for private or commercial purposes, in part or in whole, is not permitted unless authorised by Volkswagen AG. Volkswagen AG does not guarantee or accept any liability with respect to the correctness of information in this document. Copyright by Volkswagen AG.

Note

- *If the valve retainers were removed from the assembly cartridge, they must then be inserted into the Valve Insertion Device - VAS5161/18- .*
- *Press the Assembly Cartridge -VAS5161/8A- onto the insertion device from above and capture the valve retainers.*

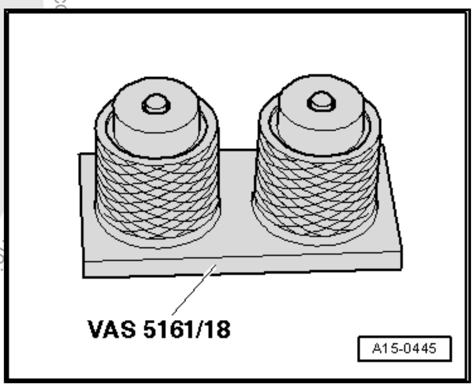

– Press the Valve Keeper Tool Kit Assembly Cartridge - VAS5161/8- down with the Valve Keeper Tool Kit Pressure Fork with Lever for Assembly Cartridge - VAS5161/2- and rotate the cartridge knurled thumb screw back and forth while pulling up.

– Release the Pressure Fork with Lever for Assembly Cartridge - VAS5161/2- with the knurled thumb screw pulled.

– Remove the Valve Keeper Tool Kit - VAS5161A- .

Further assembly is performed in the reverse order of removal, thereby observing the following:

– Install the camshafts. Refer to ⇒ “4.2 Camshaft, Removing and Installing”, page 136 .

4.6.2 Valve Shaft Seals, Removing and Installing, Cylinder Removed

Special tools and workshop equipment required

- Puller - Valve Seal - 3364-
- Seal Installer - Valve Stem - 3365-
- Valve Keeper Tool Kit - VAS5161A-
- Valve Cotter Tool Kit - Guide Plate 19B - VAS5161/19B-

- Engine And Transmission Holder - VAS6095-
- Cylinder Head Tensioning Device - VAS6419-

Remove Valve Stem Seals

– Remove the camshafts. Refer to ⇒ “4.2 Camshaft, Removing and Installing”, page 136 .

– Mark the allocation of the roller rocker lever and the hydraulic adjusting elements so they can be installed again.

– If necessary, remove the roller rocker levers with the hydraulic adjusting elements and place them on a clean surface.

– Insert the Cylinder Head Tensioning Device - VAS6419- in the Engine And Transmission Holder - VAS6095- .

– Tension the cylinder head on the cylinder head tensioning device, as illustrated.

– Connect the cylinder head tensioning device to the compressed air.

– Slide the air cushion with the lever -arrow- under the combustion chamber onto the valve stem seal that will be removed.

– Let enough compressed air flow into the air cushion until it contacts the valve plate.

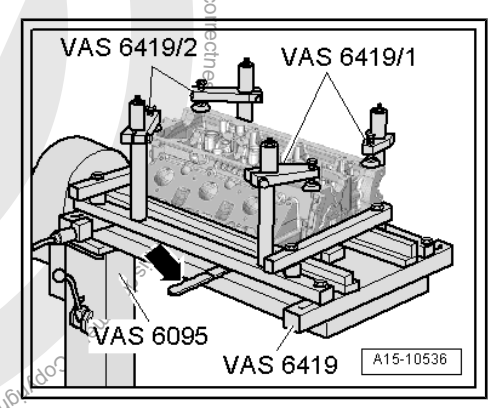

– Install the Valve Cotter Tool Kit - Guide Plate 19B - VAS5161/19C- with the Valve Cotter Tool Kit Knurled Thumb Screws M6 - VAS5161/12- as shown on the cylinder head.

– Insert the Punch - VAS5161/3- in the guide plate and loosen the stuck valve retainers with a plastic mallet.

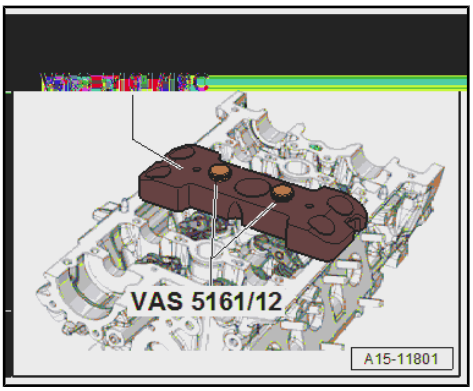

For Intake Side

– Install the Valve Cotter Tool Kit - Retainer - VAS5161/6- with Valve Cotter Tool Kit - Guide Forks M6/M8 Threaded - VAS5161/5- in the center thread of the Valve Cotter Tool Kit - Guide Plate 19B - VAS5161/19B- .

– Place the Valve Cotter Tool Kit - Assembly Cartridge - VAS5161/8- in the Valve Cotter Tool Kit - Guide Plate 19B - VAS5161/19B- .

– Engage the Pressure Fork With Lever for Assembly Cartridge - VAS5161/2- on the Retainer - VAS5161/6- .

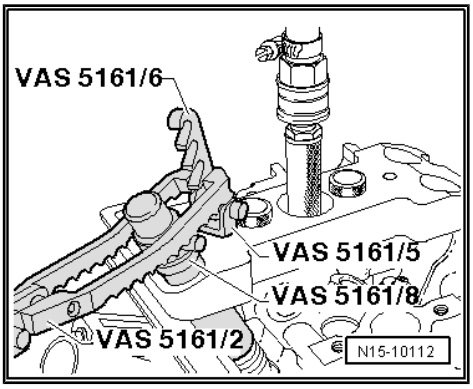

For Exhaust Side

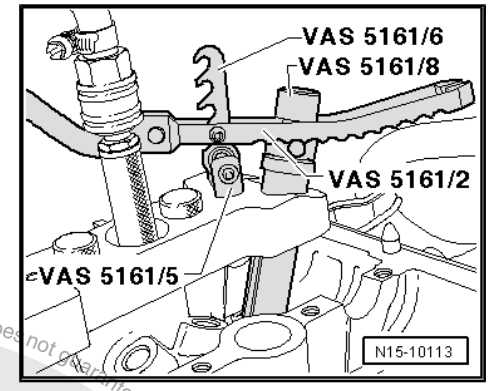

- Install the Retainer - VAS5161/6- with Forks M6/M8 Threaded - VAS5161/5- in the outer thread of the Valve Cotter Tool Kit - Guide Plate 19B - VAS5161/19B- .
- Press down the Assembly Cartridge - VAS5161/8A- and at the same time turn the knurled thumb screw on the Assembly Cartridge - VAS5161/8A- to the right until the points engage in the valve retainers.
- Move the knurled thumb screw back and forth slightly. This presses the valve retainers apart and captures them in the installation cartridge.
- Release the Pressure Fork With Lever For Assembly Cartridge - VAS5161/2- .
- Remove the Assembly Cartridge - VAS5161/8A- .
- Remove the valve stem seals using Puller - Valve Seal - 3364- .

Install Valve Stem Seals

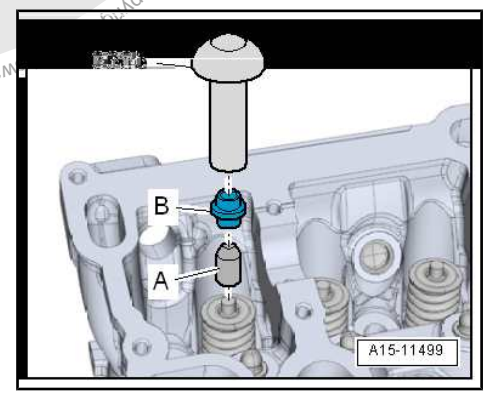

- Place the plastic sleeve -A- that is attached to valve stem seals -B- on valve stem.
- Lightly oil the valve stem seal.
- Slide the valve stem seal onto the plastic sleeve.
- Carefully press the valve stem seal onto the valve guide with the Seal Installer - Valve Stem - 3365- .
- Remove plastic sleeve.
- Insert the valve spring and valve spring plate.
- Install the Valve Keeper Tool Kit - VAS5161A- as illustrated.

Photo copy copyright. Copying for private or commercial purposes, in part or in whole, is not permitted unless authorised by Volkswagen AG. Volkswagen AG does not guarantee or accept any liability

Intake Side

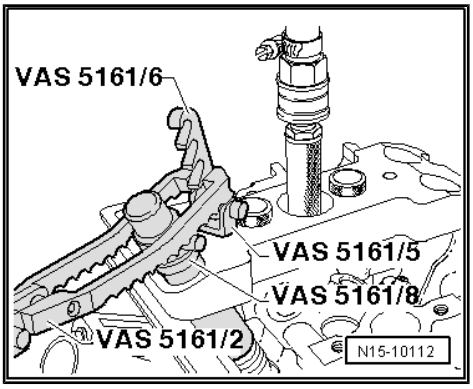

Exhaust Side

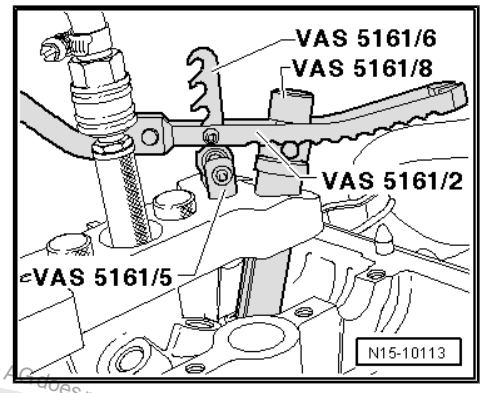

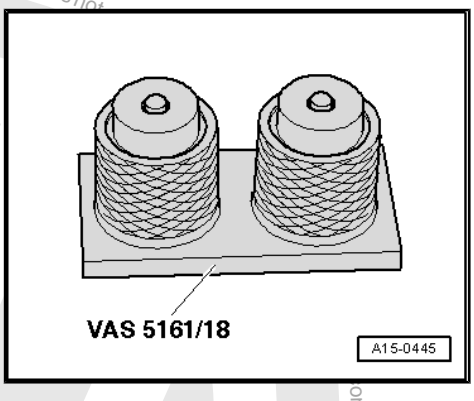

Note

- *If the valve retainers were removed from the assembly cartridge, they must then be inserted into the Valve Insertion Device - VAS5161/18- .*
- *Press the Assembly Cartridge - VAS5161/8A- onto the insertion device from above and capture the valve retainers.*

– Press the Valve Keeper Tool Kit Assembly Cartridge - VAS5161/8- down with the Valve Keeper Tool Kit Pressure Fork with Lever for Assembly Cartridge - VAS5161/2- and rotate the cartridge knurled thumb screw back and forth while pulling up.

– Release the Pressure Fork with Lever for Assembly Cartridge - VAS5161/2- with the knurled thumb screw pulled.

– Remove the Valve Keeper Tool Kit - VAS5161A- .

Assemble in reverse order of disassembly. Note the following:

– Install the camshafts. Refer to ⇒ “4.2 Camshaft, Removing and Installing”, page 136 .

Protected by copyright. Copying for private or commercial purposes, in part or in whole, is not permitted unless authorised by Volkswagen AG. Volkswagen AG does not guarantee the correctness of information in this document. Copyright by Volkswagen AG.

5 Intake and Exhaust Valves

⇒ “5.1 Valve Guides, Checking”, page 170 .

⇒ “5.2 Valves, Checking”, page 170 .

⇒ “5.3 Valve Dimensions”, page 170 .

5.1 Valve Guides, Checking

Special tools and workshop equipment required

- Dial Gauge Holder - VW387-
- Dial Gauge - 0-10mm - VAS6079-

Test Sequence

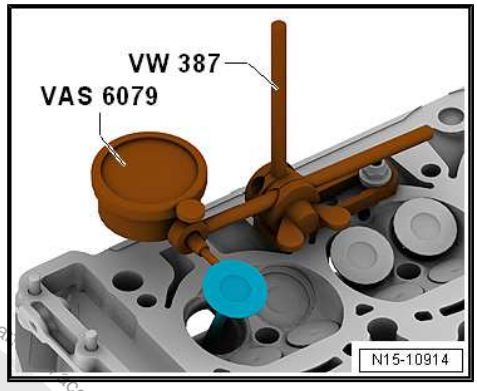

– Insert the valve into guide. Valve stem end must be flush with the guide. Due to differences in valve stem diameter, make sure that only intake valves are used to check intake valve guides, and only exhaust valves are used to check exhaust valve guides.

– Determine tip clearance.

Wear Limit

Intake Valve Guide	Exhaust Valve Guide
0.80 mm	0.80 mm

Note

- *If wear limit is exceeded, measure using new valves. Replace the cylinder head if the wear limit is still exceeded.*
- *If the valve is replaced during a repair, use a new valve for measurement.*

5.2 Valves, Checking

– Check valves at stem and seating surface for traces of wear.

– If there are clear traces of wear, replace valve.

5.3 Valve Dimensions

Valve Dimensions

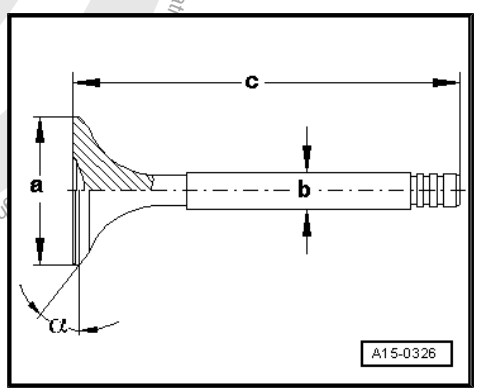

Note

Intake and exhaust valves must not be reworked. Only lapping is permitted.

Dimension		Intake Valve	Exhaust Valve
Diameter a	mm	33.85 ± 0.10	28.0 ± 0.1
Diameter b	mm	5.98 ± 0.01	5.96 ± 0.01
c	mm	104.0 ± 0.2	101.9 ± 0.2
α	∠°	45	45

Protected by copyright. Copying for private or commercial purposes, in part or in whole, is not permitted unless authorised by Volkswagen AG. Volkswagen AG does not guarantee or accept any liability with respect to the correctness of information

6 Special Tools

Special tools and workshop equipment required

- Puller - Valve Seal - 3364-
- Seal Installer - Valve Stem - 3365-
- Valve Keeper Tool Kit - VAS5161A-
- Valve Cotter Tool Kit - Guide Plate 19B - VAS5161/19B-
- Engine And Transmission Holder - VAS6095-
- Cylinder Head Tensioning Device - VAS6419-

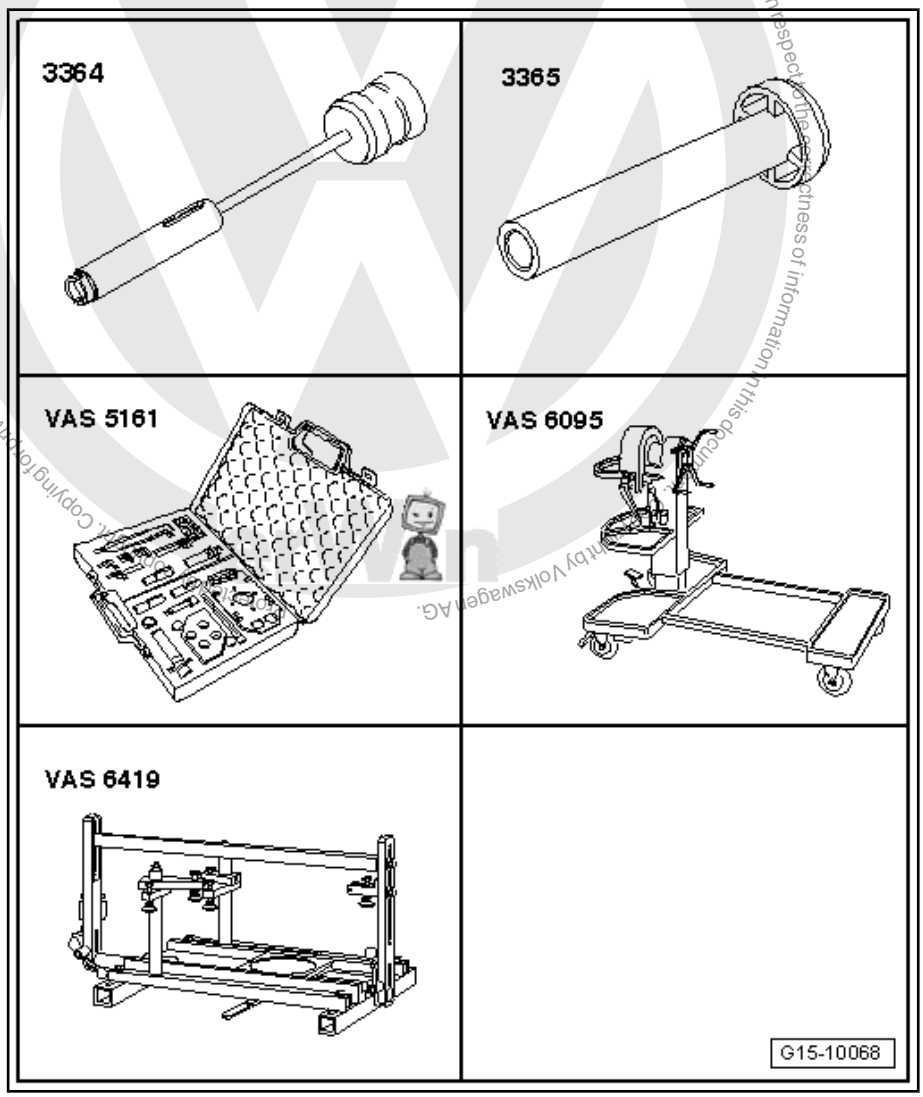

Copyright by Volkswagen AG. Volkswagen AG does not guarantee or accept any liability with respect to the correctness of information in this document. Copying for private or commercial purposes, in part or in whole, is not permitted unless authorised by Volkswagen AG.

- Assembly Tool - T10352/2-
- Counterhold - Vibration Damper - T10355-
- Locking Pin (3 pc.) - T40011-
- Chain Tensioner Lever - T40243-
- Tensioner Locking Tool - T40267-
- Camshaft Locks - T40271-

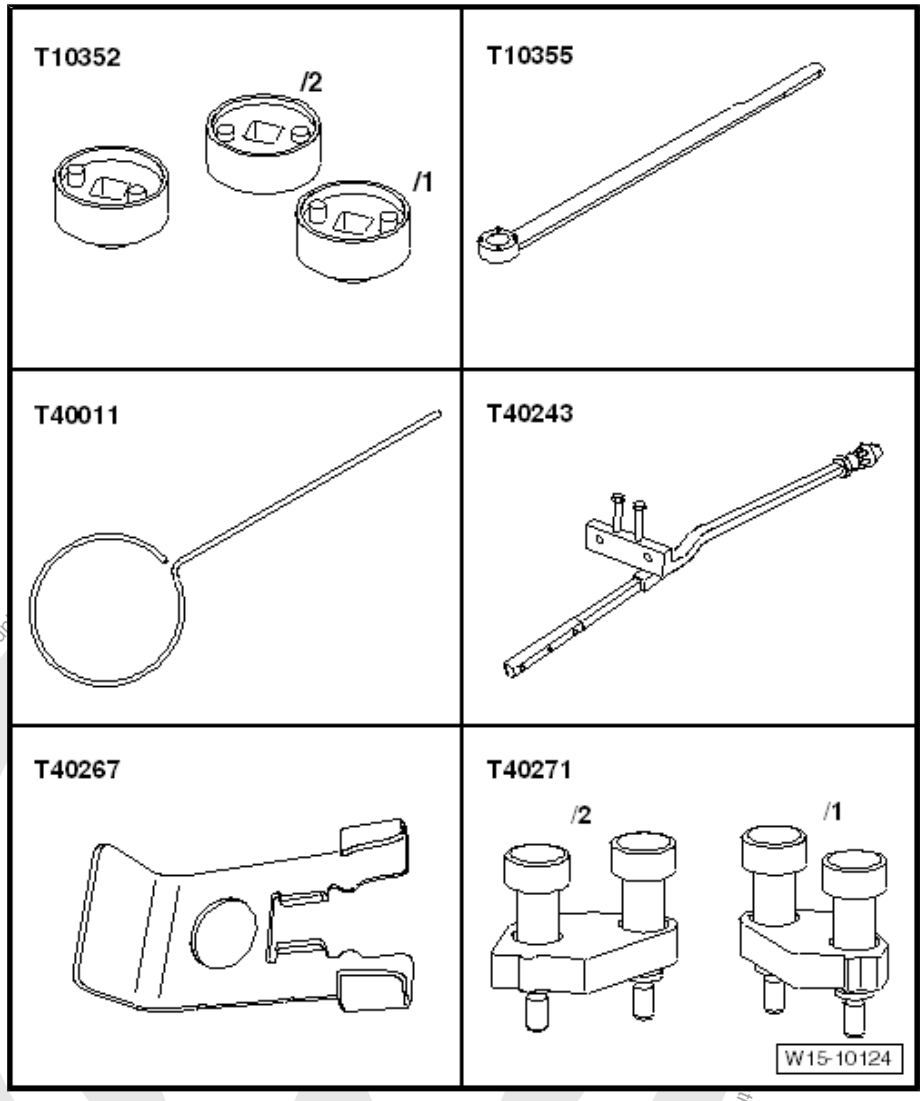

Protected by copyright. Copyright for private or commercial purposes, in part or in whole, is not permitted unless authorized. Copyright by Volkswagen AG.

- Central Valve Assembly Tool - T10352-
- Counterhold - Vibration Damper - T10355-
- Chain Tensioner Lever - T40243-
- Tensioner Locking Tool - T40267-
- Camshaft Locks - T40271-
- Adapter - T40266-
- Sealant - D 154 103 A1-

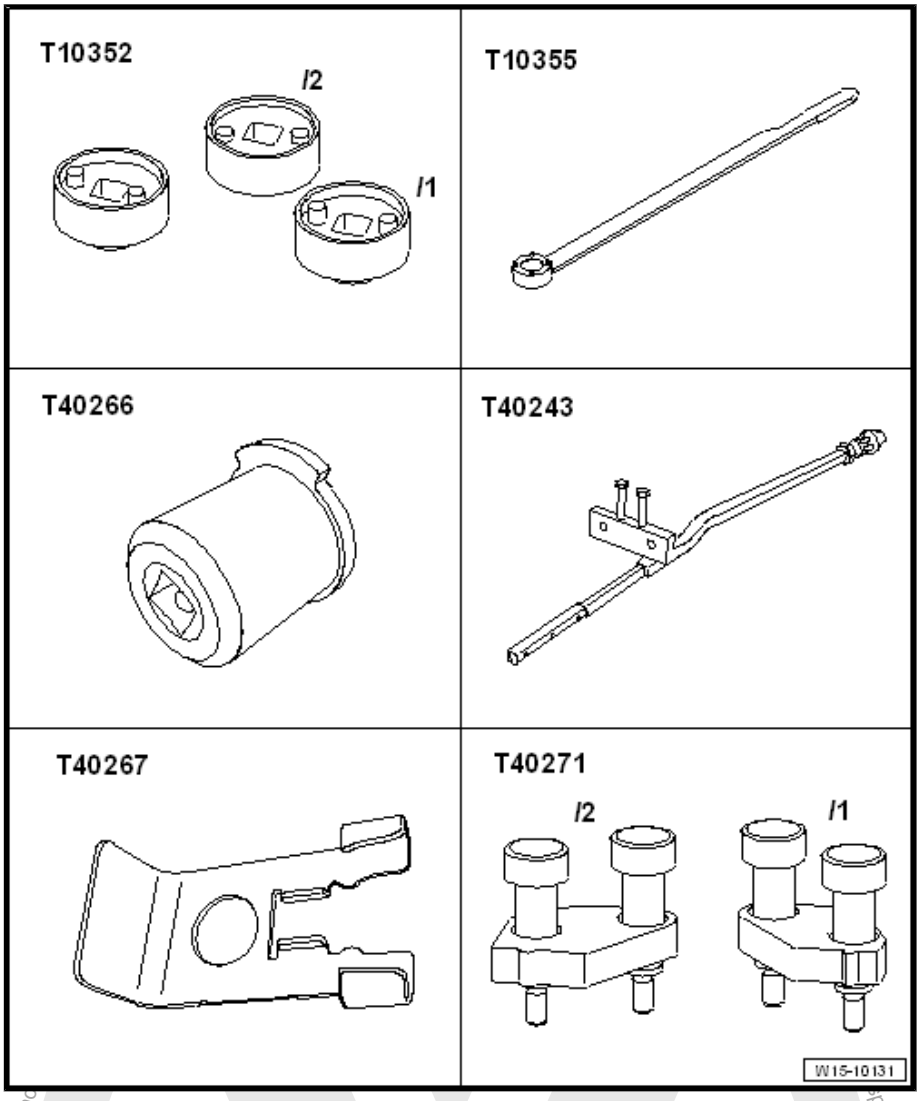

Protected by copyright. Copying for private or commercial purposes, in part or in whole, is not permitted unless authorised by Volkswagen AG. Volkswagen AG does not guarantee or accept any liability with respect to the correctness of information in this document. Copyright by Volkswagen AG.

- Spark Plug Removal Tool - 3122B-
- Puller - Valve Seal - 3364-
- Seal Installer - Valve Stem - 3365-
- Valve Cotter Tool Kit - Adapter - T40012-
- Torque Wrench 1331 5-50Nm - VAG1331-
- Valve Keeper Tool Kit - VAS5161A-
- Valve Cotter Tool Kit - Guide Plate 19B - VAS5161/19B-

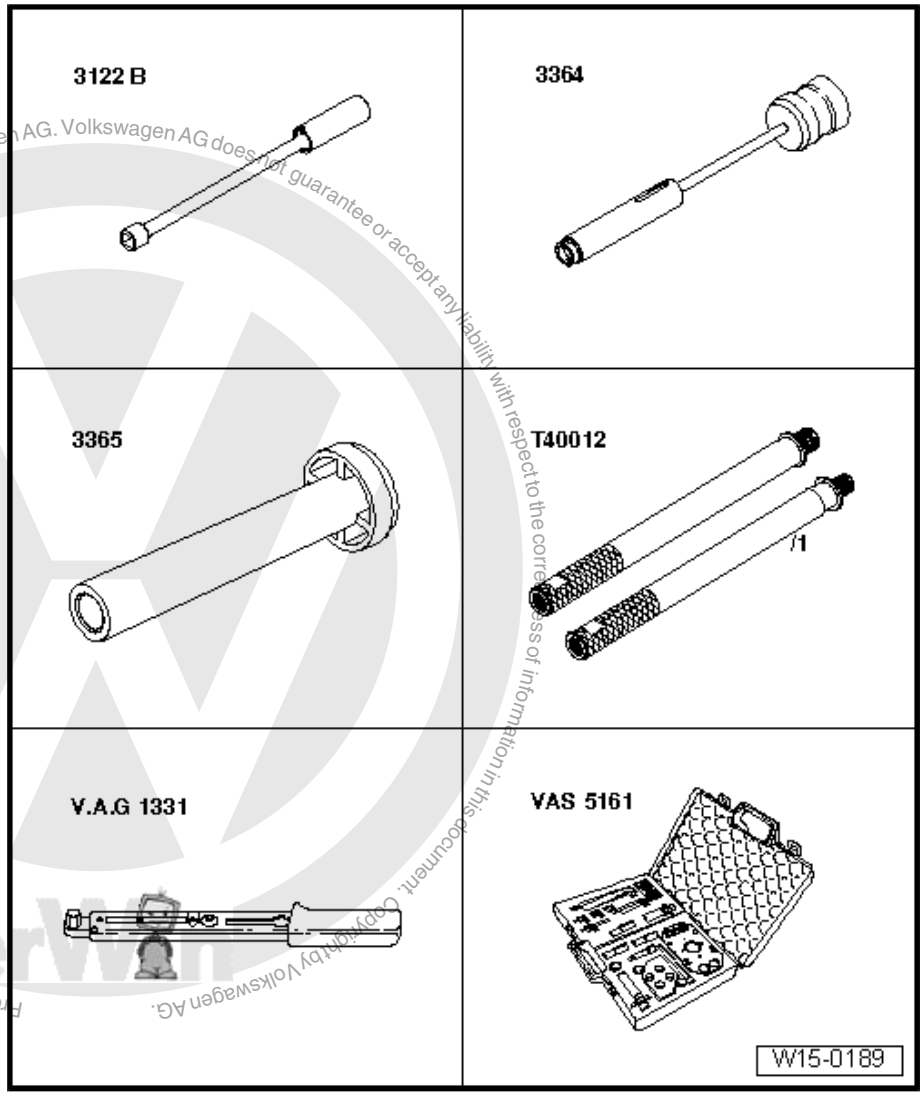

- Dial Gauge Adapter - T10170A-

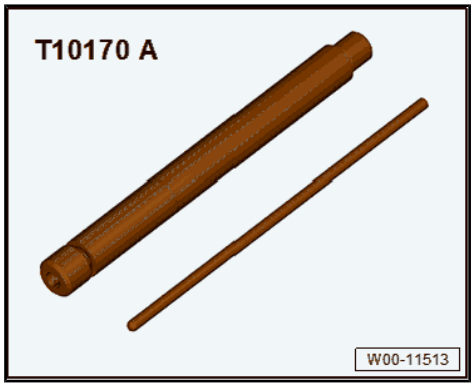

Protected by copyright. Copying for private or commercial purposes, in part or in whole, is not permitted unless authorised by Volkswagen AG. Volkswagen AG does not guarantee or accept any liability with respect to the correctness of information in this document. Copyright by Volkswagen AG.

- Assembly Tool - T10531-

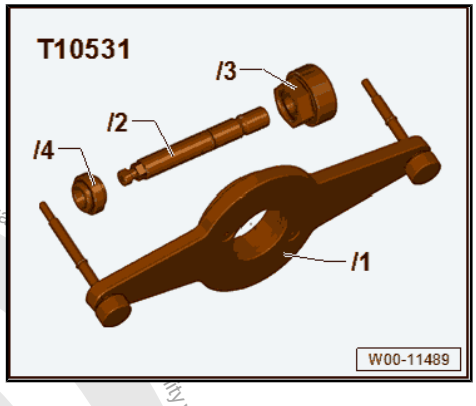

-
- Mount - T10531/1-
- Tensioning Pins - T10531/2-
- Turning Over Tool - T10531/3-
- Collar Nut - T10531/4-
- Seal Installer - Crankshaft - T10354-

- Press Piece - Gearbox - T10375-

- Camshaft Spacer - T40191-

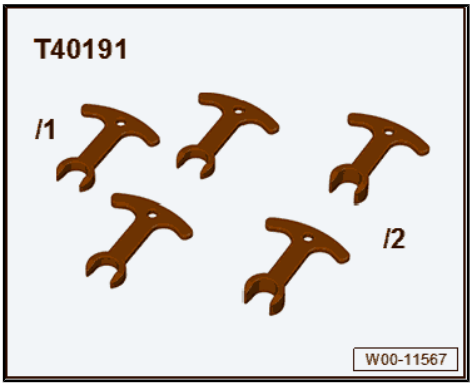

Protected by copyright. Copying for private or commercial purposes, in part or in whole, is not permitted unless authorised by Volkswagen AG. Volkswagen AG does not guarantee or accept any liability with respect to the correctness of information in this repair manual.

Volkswagen AG does not ... protected by copyright. Copying for private or commercial purposes, in part or in whole, is not permitted unless authorised by Volkswagen AG. ... liability with respect to the correctness of information in this ... by Volkswagen

- Adapter - T40266-

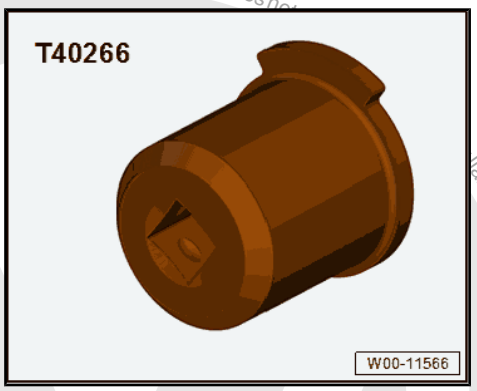

- Seal Installer - Crankshaft - T40274-

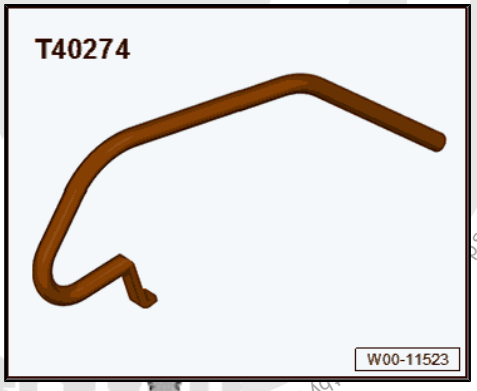

- Compression Tester Kit - Adapter 5A - VAG1381/5A-

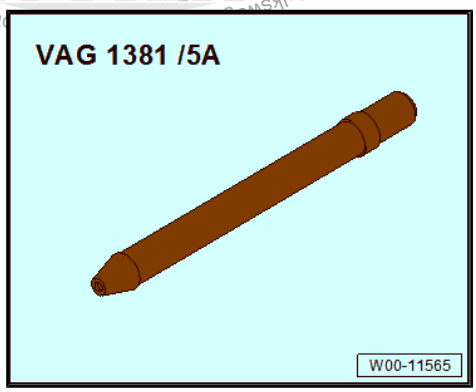

- Compression Tester Kit - VAG1763-

- Dial Gauge - 0-10mm - VAS6079-

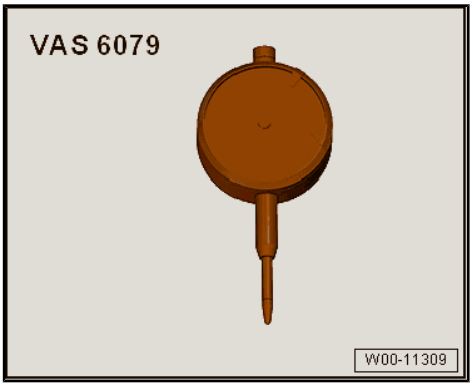

- Compression Tester Kit - Adapter 1 - VAG1381/1-
- Engine Bung Set - VAS6122-

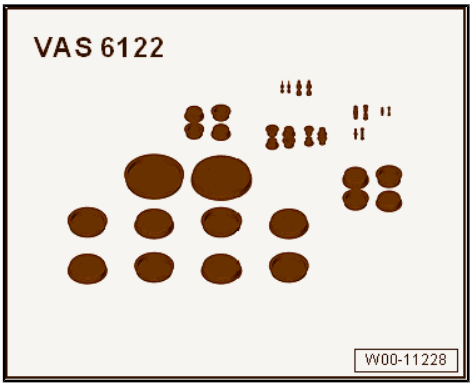

- Dial Gauge Set - VAS6341-

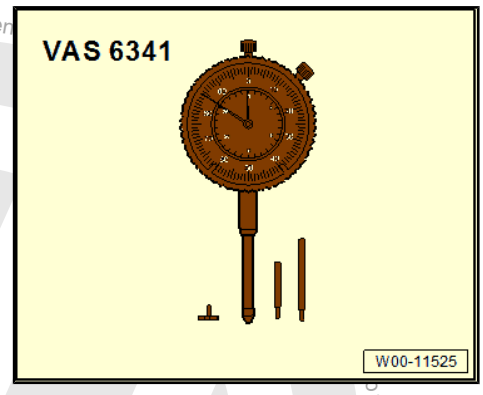

- Dial Gauge Holder - VW387-

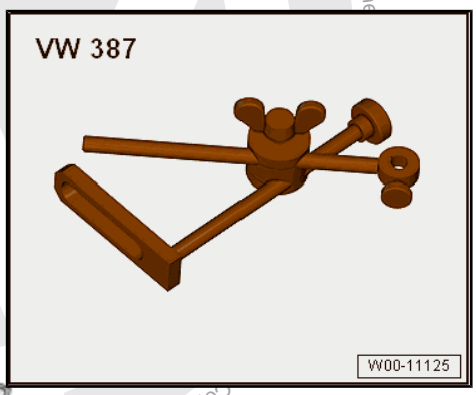

Protected by copyright. Copying for private or commercial purposes, in part or in whole, is not permitted unless authorised by Volkswagen AG. Volkswagen
Copyright by Volkswagen AG.

- Hose Clip Pliers - VAS6362-

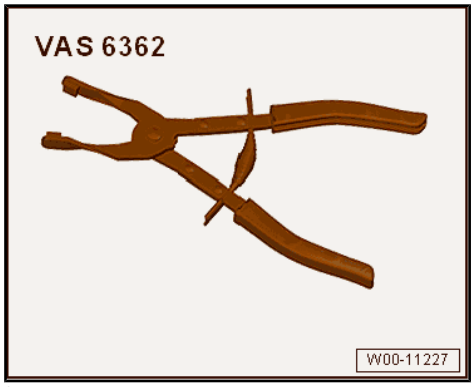

Protected by copyright. Copyright for private or commercial purposes, in part or in whole, is not permitted unless authorised by Volkswagen AG. Volkswagen AG does not guarantee or accept any liability with respect to the correctness of information in this document. Copyright by Volkswagen AG.

17 – Lubrication

1 Oil Pan/Oil Pump

⇒ “1.1 Overview - Oil Pan/Oil Pump”, page 179 .

⇒ “1.2 Engine Oil”, page 182

⇒ “1.3 Oil Pan Lower Section, Removing and Installing”, page 182 .

⇒ “1.4 Oil Pan Upper Section, Removing and Installing”, page 185 .

⇒ “1.5 Oil Pump, Removing and Installing”, page 188

⇒ “1.6 Oil Level Thermal Sensor G266 , Removing and Installing”, page 190

1.1 Overview - Oil Pan/Oil Pump

Note

If large quantities of metal particles or other deposits such as those caused by partial seizure of the crankshaft or connecting rod damage are found in the engine oil, clean the oil channels thoroughly and replace the engine oil cooler to prevent further damage.

Protected by copyright. Copying for private or commercial purposes, in part or in whole, is not permitted unless authorised by Volkswagen AG. Volkswagen AG does not guarantee or accept any liability with respect to the correctness of information in this document. Copyright by Volkswagen AG.

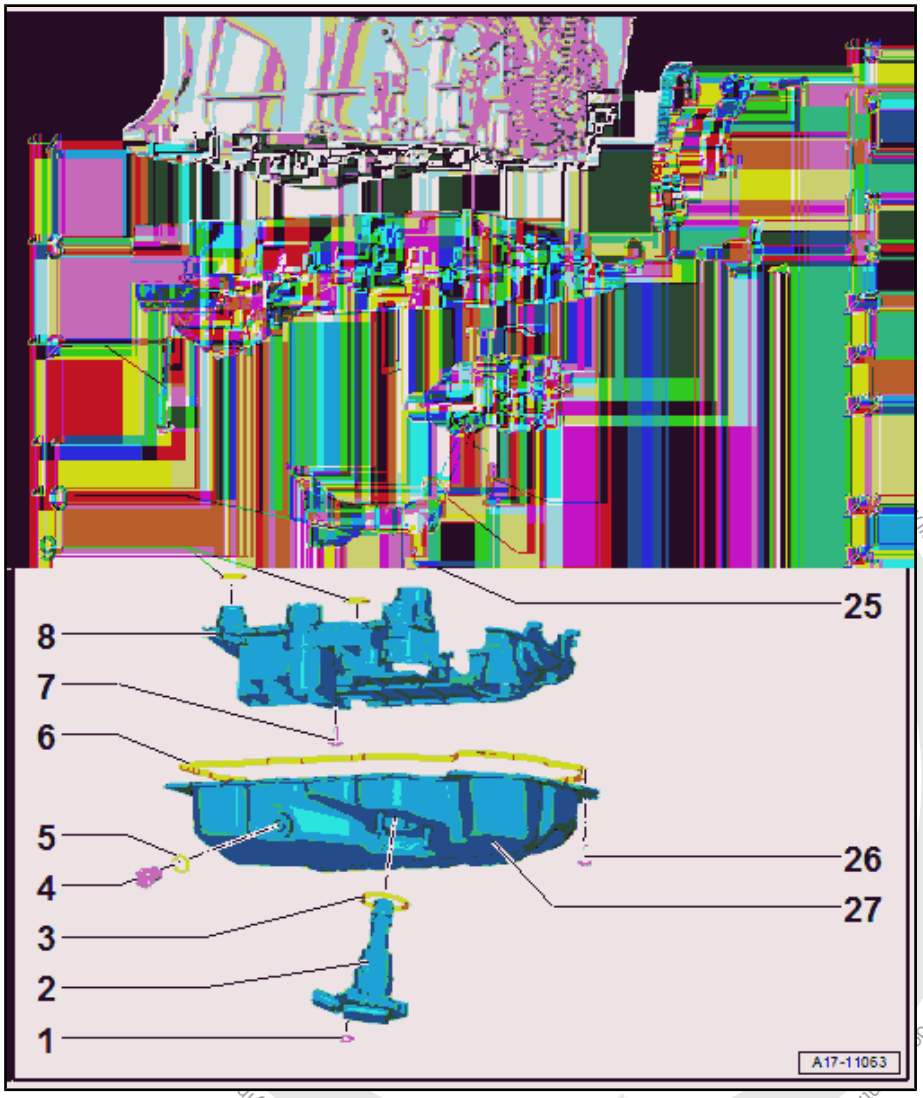

1 - Nut

- ❑ 9 Nm

2 - Oil Level Thermal Sensor - G266-

- ❑ Removing and installing. Refer to ⇒ “1.6 Oil Level Thermal Sensor G266 , Removing and Installing”, page 190 .

3 - 0-Ring

- ❑ Replace after removing
- ❑ Coat with engine oil

4 - Oil Drain Plug/Plug

- ❑ Sheet metal oil pan: 30 Nm
- ❑ Plastic oil pan: turn using the Oil Drain Plug Assembly Tool - T10549- until it stops

5 - Gasket/O-Ring

- ❑ Replace the gasket after removal
- ❑ Replace the O-ring if there are leaks

6 - Seal/Liquid Sealant

- ❑ Refer to parts catalog

7 - Bolt

- ❑ 4 Nm + 45°
- ❑ Replace after removing
- ❑ For the oil baffle and oil intake pipe

8 - Oil Baffle

- ❑ There are plastic ribs on the oil baffle that deform permanently when tightening the oil pan lower section. The plastic ribs ensure the oil baffle has no play and does not rattle. Because of this, always replace the oil baffle.

9 - O-Ring

- ❑ Replace after removing
- ❑ Coat with engine oil

10 - Oil Intake Pipe

- ❑ Clean the screen if there are debris

11 - Centering Bracket

12 - Bolt

- ❑ Replace after removing
- ❑ Coat with engine oil

13 - Oil Pan Upper Section

- ❑ Removing and installing. Refer to ⇒ “1.4 Oil Pan Upper Section, Removing and Installing”, page 185 .
- ❑ Tightening sequence. Refer to ⇒ Fig. ““Oil Pan Upper Section - Tightening Sequence”“ , page 181 .

14 - Cylinder Block

15 - Oil Pump Drive Chain

- ❑ Mark direction of rotation before removing

16 - Bolt

- ❑ 9 Nm

17 - Chain Tensioner

18 - O-Ring

- ❑ Replace after removing
- ❑ Coat with engine oil

19 - Oil Pressure Regulation Valve - N428-

- ❑ Removing and installing. Refer to ⇒ “4.8 Oil Pressure Regulation Valve N428 , Removing and Installing”, page 206 .

20 - Bolt

- ❑ Replace after removing
- ❑ Tightening sequence. Refer to ⇒ Fig. ““Oil Pan Upper Section - Tightening Sequence”“ , page 181

21 - Oil Screen

22 - Oil Pump

- ❑ Removing and installing. Refer to ⇒ “1.5 Oil Pump, Removing and Installing”, page 188 .

23 - Oil Pump Bolt

- ❑ 8 Nm +90°
- ❑ Replace after removing

24 - O-Ring

- ❑ Replace after removing
- ❑ Coat with engine oil

25 - Oil Intake Pipe Bolt

- ❑ 4 Nm +45°
- ❑ Replace after removing

26 - Oil Pan Bolt

- ❑ Replace after removing
- ❑ Tightening sequence. Refer to ⇒ “1.3 Oil Pan Lower Section, Removing and Installing”, page 182 .

27 - Oil Pan Lower Section

- ❑ Metal or plastic
- ❑ Removing and installing. Refer to ⇒ “1.3 Oil Pan Lower Section, Removing and Installing”, page 182 .

Oil Pan Upper Section - Tightening Sequence

Note

Replace the bolts that were tightened with an additional turn.

– Tighten the bolts -1 through 14- in the sequence shown.

Step	Bolts	Tightening Sequence and Tightening Specification
1.	-1- to -14-	8 Nm
2.	-1- and -2-	180° additional turn
3.	-3- to -9-	45° additional turn
4.	-10-	180° additional turn
5.	-11- to -14-	90° additional turn

Protected by copyright. Copyright by Volkswagen AG. Volkswagen AG does not guarantee or accept any liability with respect to the correctness of information. Copying for private or commercial purposes, in whole or in part, is not permitted unless authorised by Volkswagen AG.

1.2 Engine Oil

The oil capacity it determined by attempting. For reasons of tolerance, the oil temperature and dripping time cause variance in the actual oil capacity. The performed repair influences the oil capacity. The measurement for the correct oil level is the mark on the oil dipstick guide tube.

Engine oil specification. Refer to the ⇒ Maintenance ; Booklet 36.1 ; Procedure Descriptions; Engine Oil, Capacities and Specifications .

Replacing the engine oil. Refer to ⇒ Maintenance ; Booklet 36.1 ; Procedure Descriptions; Engine Oil, Draining, Replacing Oil Filter, and Filling .

Checking the engine oil level. Refer to ⇒ Maintenance ; Booklet 36.1 ; Procedure Descriptions; Engine Oil Level, Checking .

1.3 Oil Pan Lower Section, Removing and Installing

⇒ "1.3.1 Oil Pan Lower Section, Removing and Installing, Plastic Oil Pan", page 182

⇒ "1.3.2 Oil Pan Lower Section, Removing and Installing, Metal Oil Pan", page 183

1.3.1 Oil Pan Lower Section, Removing and Installing, Plastic Oil Pan

Special tools and workshop equipment required

- Used Oil Collection and Extraction Unit - SMN372500-
- Oil Drain Plug Assembly Tool - T10549-

Caution

This procedure contains mandatory replaceable parts. Refer to component overview prior to starting procedure.

Mandatory Replacement Parts

- Bolts - Oil Pan
- Bolt - Oil Baffle
- Gasket - Drain Plug
- Oil Baffle

Note

There are plastic ribs on the oil baffle that deform permanently when tightening the oil pan lower section. The plastic ribs ensure the oil baffle has no play and does not rattle. Because of this, always replace the oil baffle.

Protected by copyright. Copying for private or commercial purposes, in part or in whole, is not permitted unless authorised by Volkswagen AG. Volkswagen AG does not guarantee or accept any liability with respect to the correctness of information in this document. Copyright by Volkswagen AG.

Removing

– Remove the noise insulation -1-. Refer to ⇒ Body Exterior; Rep. Gr. 66 ; Noise Insulation; Overview - Noise Insulation .

– Place the Used Oil Collection and Extraction Unit - SMN372500- under the engine and drain the engine oil.

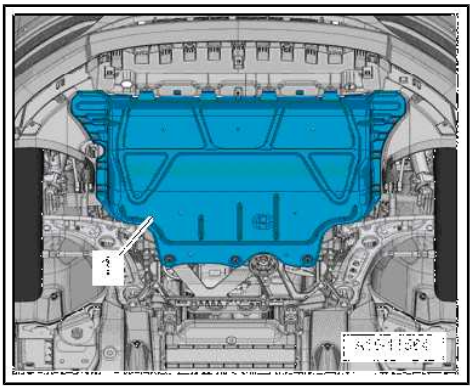

Note

Follow all waste disposal regulations!

– Remove the bolts -1 through 20- and remove the oil pan.

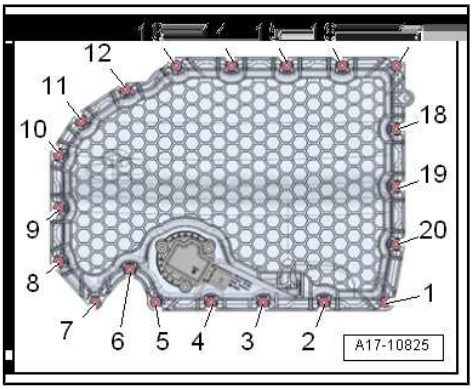

– Remove the bolt -1- and remove the oil baffle -2-.

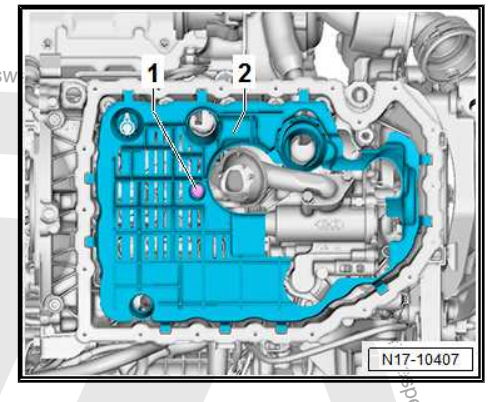

Installing

– Install a new oil baffle. Tightening specification. Refer to -item 7- ⇒ Item 7 (page 180) .

– Tighten the new bolts -1 through 20- in two stages in the sequence shown:

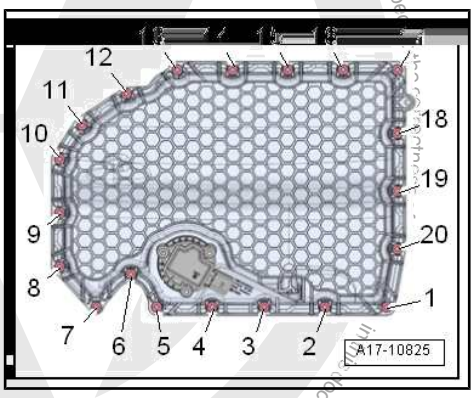

Step	Tightening Sequence and Tightening Specification
1. Bolts -1- through -20-	Pre-tighten to 8 Nm
2. Bolts -1- through -20-	90° additional turn

– Fill with engine oil and then check the level. Refer to ⇒ Maintenance ; Booklet 36.1 ; Engine; Draining; Oil Filter, Replacing; Engine Oil, Filling .

1.3.2 Oil Pan Lower Section, Removing and Installing, Metal Oil Pan

Special tools and workshop equipment required

♦ Used Oil Collection and Extraction Unit - SMN372500-

Protected by copyright. Copying for private or commercial purposes, in whole or in part, is not permitted unless authorised by Volkswagen AG. Volkswagen AG. Copyright by Volkswagen AG.

- Hand Drill with Plastic Brush Attachment
- Protective Eyewear
- Silicone sealant. Refer to Parts Catalog.

Caution

This procedure contains mandatory replaceable parts. Refer to component overview prior to starting procedure.

Mandatory Replacement Parts

- Bolts - Oil Pan
- Bolt - Oil Baffle
- Gasket - Drain Plug
- Oil Baffle

Note

There are plastic ribs on the oil baffle that deform permanently when tightening the oil pan lower section. The plastic ribs ensure the oil baffle has no play and does not rattle. Because of this, always replace the oil baffle.

Removing

– Remove the noise insulation -1-. Refer to ⇒ Body Exterior; Rep. Gr. 66 ; Noise Insulation; Overview - Noise Insulation .

– Place the Used Oil Collection and Extraction Unit - SMN372500- under the engine and drain the engine oil.

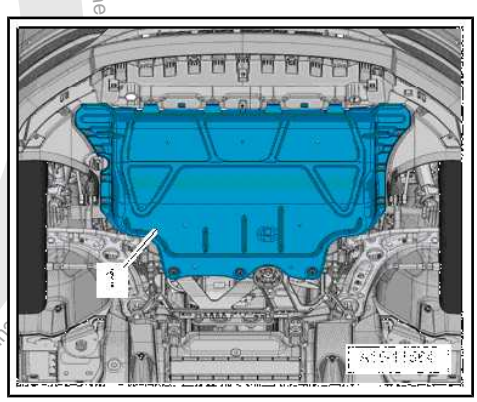

– Remove the bolts -1 through 20- and remove the oil pan.

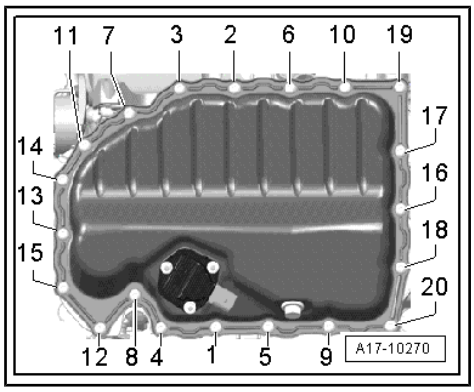

Protected by copyright. Copying for private or commercial purposes, in part or whole, is not permitted unless authorised by Volkswagen AG. Volkswagen AG does not guarantee or accept any liability with respect to the

– Remove the bolt -1- and remove the oil baffle -2-.

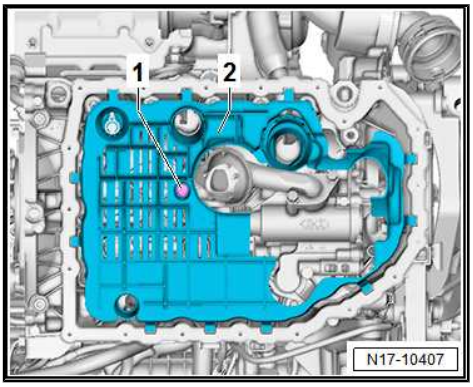

Installing

– Install a new oil baffle. Tightening specification. Refer to -item 7- ⇒ Item 7 (page 180) .

– Remove the sealant residue and clean the sealing surface.

– Apply silicone sealant on the sealing surface of the oil pan lower section as shown.

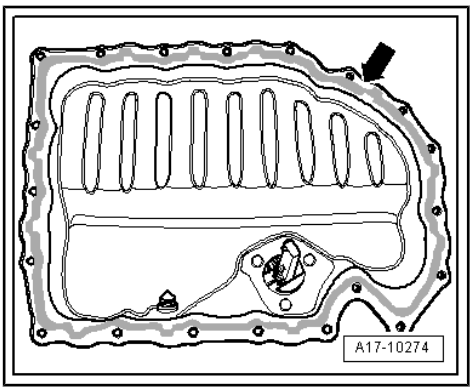

– Tighten the new bolts -1 through 20- in two stages in the sequence shown:

Step	Tightening Sequence and Tightening Specification
1. Bolts -1- through -20-	Pre-tighten to 8 Nm
2. Bolts -1- through -20-	45° additional turn

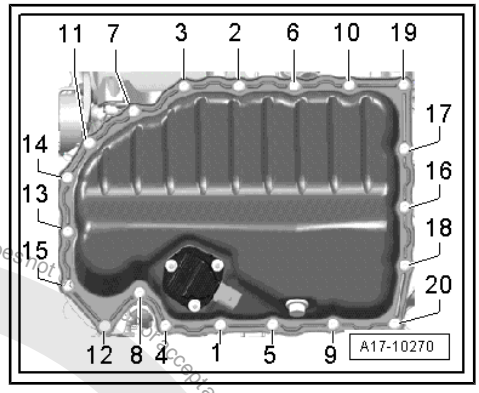

– Fill with engine oil and then check the level. Refer to ⇒ Maintenance ; Booklet ; Engine; Draining; Oil Filter, Replacing; Engine Oil, Filling .

1.4 Oil Pan Upper Section, Removing and Installing

Special tools and workshop equipment required

- Elbow Assembly Tool - T10118-
- Chain Tensioner Locking Tool - T40265-
- Hand drill with plastic brush attachment
- Protective eyewear
- Silicone grease. Refer to the Parts Catalog.

Caution

This procedure contains mandatory replaceable parts. Refer to component overview prior to starting procedure.

Mandatory Replacement Parts

- Bolts - Upper Oil Pan

Protected by copyright. Copying for private or commercial purposes, in part or in whole, is not permitted unless authorised by Volkswagen AG. Volkswagen AG does not guarantee or accept any liability with respect to the correctness of information in this document. Copyright by Volkswagen AG.

Protected by copyright. Copying for private or commercial purposes, in part or in whole, is not permitted unless authorised by Volkswagen AG. Volkswagen AG does not guarantee or accept any liability with respect to the correctness of

♦ Bolts - Lower Timing Chain Cover

Removing

- The transmission is removed.

– Remove the oil pan lower section. Refer to
⇒ “1.3 Oil Pan Lower Section, Removing and Installing”, page 182 .

– Remove the rear sealing flange. Refer to
⇒ “2.3 Sealing Flange, Removing and Installing, Transmission Side”, page 59 .

– Remove the oil pump. Refer to
⇒ “1.5 Oil Pump, Removing and Installing”, page 188 .

– Disconnect the connector -1-.

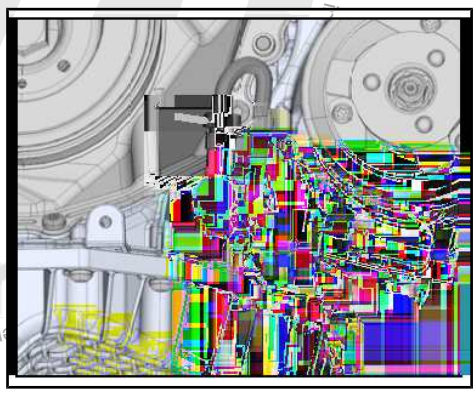

– Remove the bolts -arrows-.

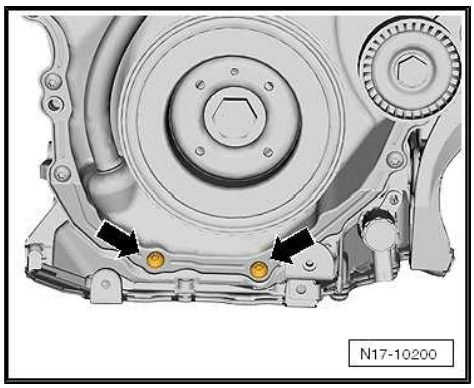

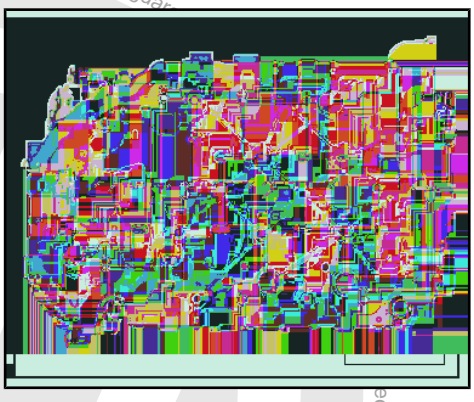

– Remove the bolts -1 through 14-.

– First pry the upper section oil pan out on the transmission side. When prying out, be careful not to bend the timing chain cover.

Installing

Note

- *Be sure to check the expiration date of the silicone sealant.*
- *The oil pan (upper part) must be installed within five minutes after application of silicone sealant.*
- *Replace the bolts that were tightened with an additional turn.*
- *Replace the gaskets, seals and self-locking nuts.*

– Remove any sealant residue on the cylinder block using a flat blade scraper.

CAUTION

Risk of injuring the eyes from sealant residue.

– Wear protective eyewear.

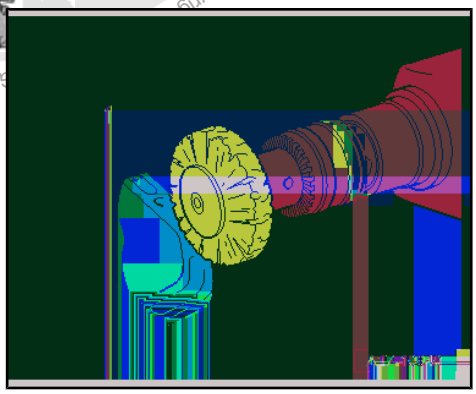

– Remove any remaining sealant on oil pan upper section using, for example, a rotating plastic brush.

Note

See if the timing chain cover is deformed. Then mount the upper section of the oil pan without any sealant and check the gap between the cover and the top section. If deformation is found and the cover can no longer be aligned, the cover must be replaced after installing the oil pan upper section.

– Clean the sealing surfaces. They must be free of oil and grease.

– Check for dirt in the oil passages in the oil pan upper section and in the crankshaft housing.

– Cut the tube nozzle at the front marking (nozzle diameter: approximately 2 mm).

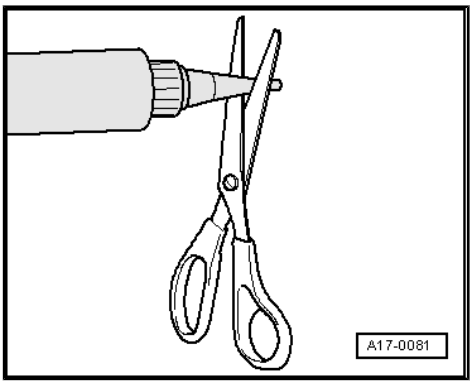

Note

The lubrication system could be plugged with excess sealant. Do not apply sealant bead thicker than indicated.

– Apply the silicone sealant on the clean sealing surface of the upper oil pan section as shown -arrows-.

• Sealant bead thickness: 2 to 3 mm.

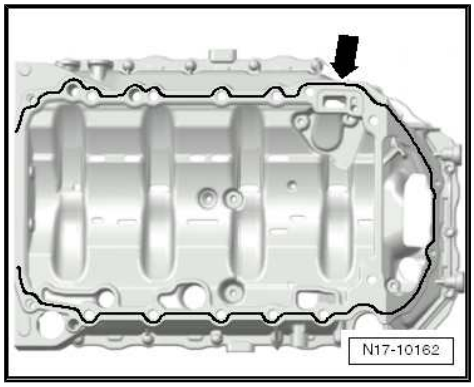

– Apply the silicon sealant, as shown in the illustration -arrows-, between the cylinder block and the timing chain guard lower section.

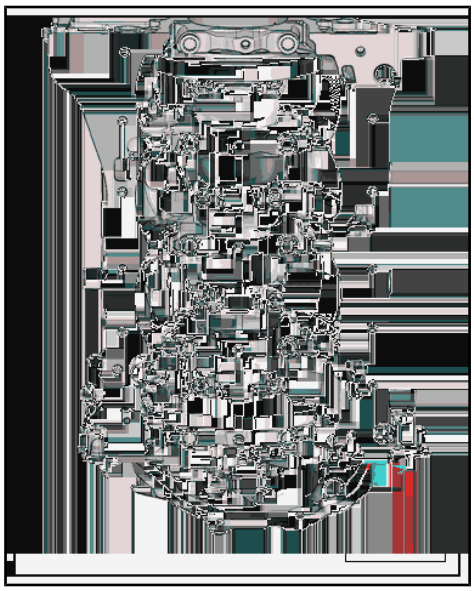

Note

◆ *The oil pan upper section must be installed within 5 minutes after application of silicone sealant.*

◆ *The sealant bead may not be thicker than specified, otherwise excess sealant could enter the oil pan and clog the oil intake tube.*

• On the transmission side, the upper part of the oil pan and the crankcase must align.

– Position the upper section of the oil pan immediately and tighten the bolts, tightening sequence. Refer to Tightening sequence. Refer to
⇒ Fig. ""Oil Pan Upper Section - Tightening Sequence"", page 181 .

– Install the bolts -arrows-. Tightening specifications -item 16-
⇒ Item 16 (page 105) .

– Install the rear sealing flange. Refer to
⇒ "2.3 Sealing Flange, Removing and Installing, Transmission Side", page 59 .

– Install the oil pump. Refer to
⇒ "1.5 Oil Pump, Removing and Installing", page 188 .

– Insert the new oil baffle and attach it. Tightening specification. Refer to -item 7- ⇒ Item 7 (page 180) .

– Install oil pan lower section. Refer to
⇒ "1.3 Oil Pan Lower Section, Removing and Installing", page 182 .

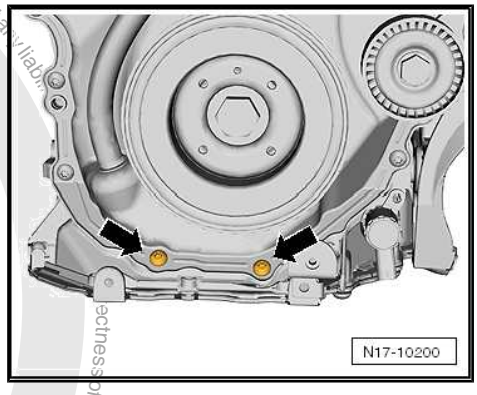

Assemble in reverse order of disassembly.

– Fill with engine oil and then check the level. Refer to ⇒ Maintenance ; Booklet 36.1 ; Procedure Descriptions; Engine Oil, Draining, Replacing Oil Filter, and Filling .

Tightening Specifications

◆ Refer to ⇒ "1.1 Overview - Oil Pan/Oil Pump", page 179 .

1.5 Oil Pump, Removing and Installing

Special tools and workshop equipment required

◆ Elbow Assembly Tool - T10118-

Copyright by Volkswagen AG. Volkswagen AG does not guarantee or accept any liability with respect to the correctness of information in this document. Copying for private or commercial purposes, in part or in whole, is not permitted unless authorized by Volkswagen AG.

- Chain Tensioner Locking Tool - T40265-

Caution

This procedure contains mandatory replaceable parts. Refer to component overview prior to starting procedure.

Mandatory Replacement Parts

- Bolts - Oil Baffle
- Bolts - Oil Pump
- Oil Baffle

Note

There are plastic ribs on the oil baffle that deform permanently when tightening. The plastic ribs ensure the oil baffle has no play and does not rattle. Because of this, always replace the oil baffle after removal.

Removing

– Remove the oil pan lower section. Refer to ⇒ "1.3 Oil Pan Lower Section, Removing and Installing", page 182 .

– Remove bolt -arrow- and oil baffle.

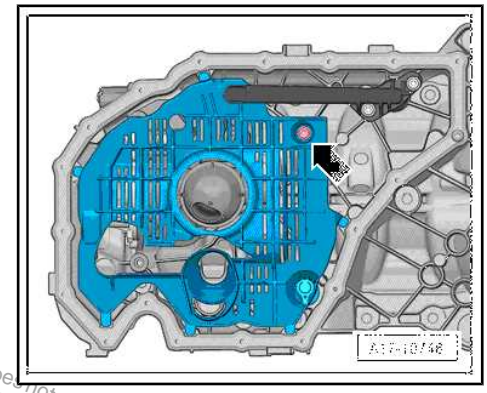

– Pull the chain tensioner spring using the Elbow Assembly Tool - T10118- in direction of -arrow- and secure it with the Chain Tensioner Locking Tool - T40265- .

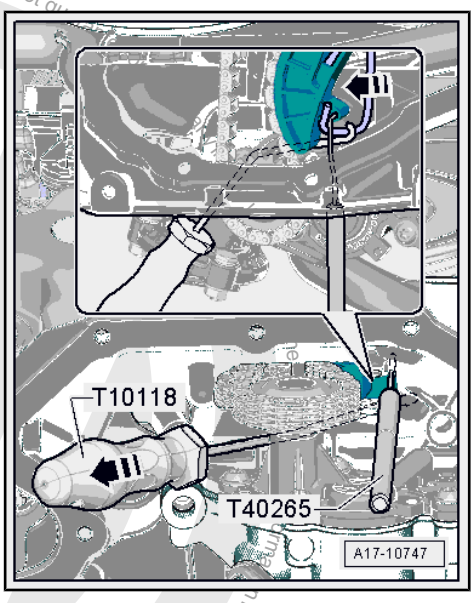

Protected by copyright. Copying for private or commercial purposes, in part or in whole, is not permitted unless authorised by Volkswagen AG. Volkswagen AG does not guarantee the accuracy and completeness of all information in this document. Copyright by Volkswagen AG.

– Remove the bolts -arrows- and the oil pump.

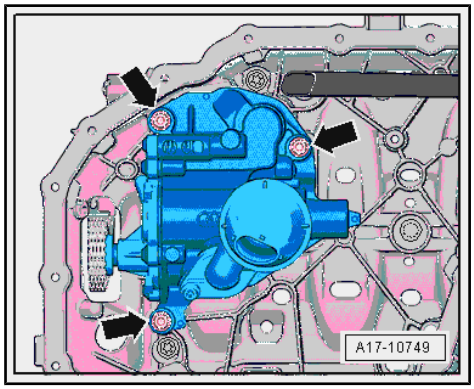

Installing

Install in reverse order of removal and note the following:

– Make sure there are both alignment bushings for centering the oil pump.

– Check the oil intake pipe screen and the oil channels in the oil pan upper section for contamination before installing the oil pump.

– Guide the oil pump chain sprocket into the drive chain and install the oil pump.

– Pull the chain tensioner spring with the Elbow Assembly Tool - T10118- in the direction of -arrow- and remove the Chain Tensioner Locking Tool - T40265- .

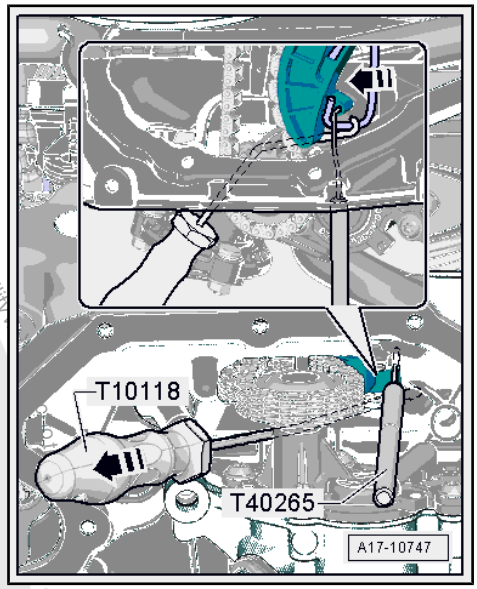

– Slowly release the Elbow Assembly Tool - T10118- .

– Place the O-ring -item 9- ⇒ Item 9 (page 180) on the new oil baffle and coat with engine oil.

– Insert the new oil baffle and secure it. Tightening specification. Refer to -item 7- ⇒ Item 7 (page 180) .

– Install the oil pan lower section. Refer to ⇒ “1.3 Oil Pan Lower Section, Removing and Installing”, page 182 .

– Fill with engine oil and then check the level. Refer to ⇒ Maintenance ; Booklet ; Engine; Draining; Oil Filter, Replacing; Engine Oil, Filling .

Tightening Specifications

♦ Refer to ⇒ “1.1 Overview - Oil Pan/Oil Pump”, page 179

1.6 Oil Level Thermal Sensor - G266- , Removing and Installing

Caution

This procedure contains mandatory replaceable parts. Refer to component overview prior to starting procedure.

Mandatory Replacement Parts

♦ O-ring - Oil Level Thermal Sensor

Removing

– Drain the engine oil. Refer to ⇒ Maintenance ; Booklet 36.1 ; Procedure Descriptions; Engine Oil, Draining, Replacing Oil Filter, and Filling .

– Remove the noise insulation. Refer to ⇒ Body Exterior; Rep. Gr. 66 ; Noise Insulation; Overview - Noise Insulation .

Protected by copyright. Copyright by Volkswagen AG. Copyright Volkswagen AG does not guarantee or accept any liability of information in this document. Commercial purposes, in part or in whole, is not permitted unless authorised by Volkswagen AG.

– Disconnect the connector -3-.

– Remove the nuts -1- and the Oil Level Thermal Sensor - G266- -4-.

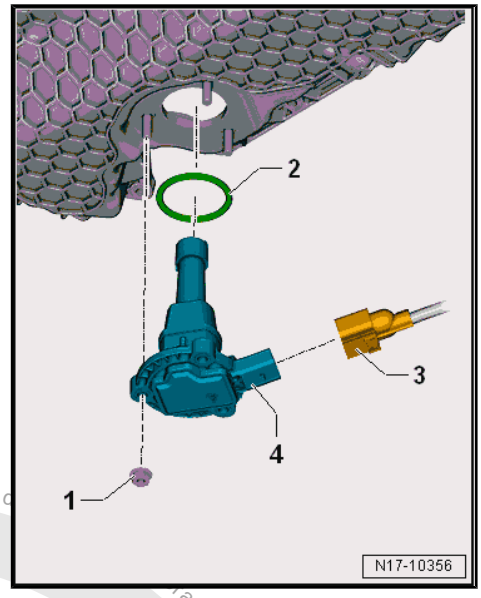

Installing

Install in reverse order of removal. Note the following:

– Replace the O-ring -2-.

– Fill with engine oil and then check the level. Refer to ⇒ Maintenance ; Booklet 36.1 ; Procedure Descriptions; Engine Oil, Draining, Replacing Oil Filter, and Filling .

Tightening Specifications

♦ Refer to ⇒ “1.1 Overview - Oil Pan/Oil Pump”, page 179

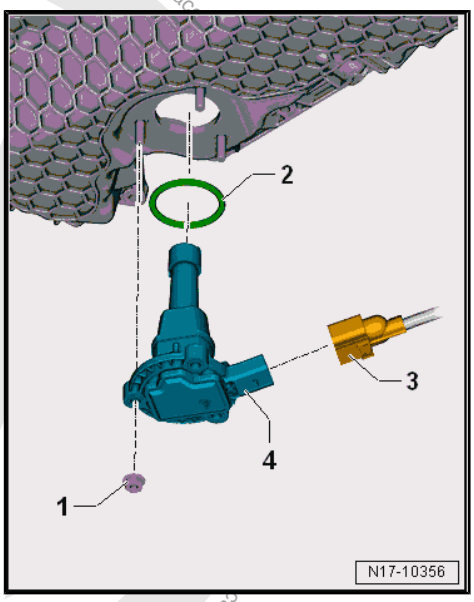

Protected by copyright. Copyright for private or commercial purposes, in any form and by any means, is not permitted unless authorised by Volkswagen AG. Volkswagen AG does not guarantee or accept any liability with respect to the correctness and completeness of this document. Copyright by Volkswagen AG.

2 Engine Oil Cooler

⇒ "2.1 Overview - Engine Oil Cooler", page 192 .

⇒ "2.2 Engine Oil Cooler, Removing and Installing", page 192 .

⇒ "2.3 Mechanical Switch Valve, Removing and Installing", page 194 .

2.1 Overview - Engine Oil Cooler

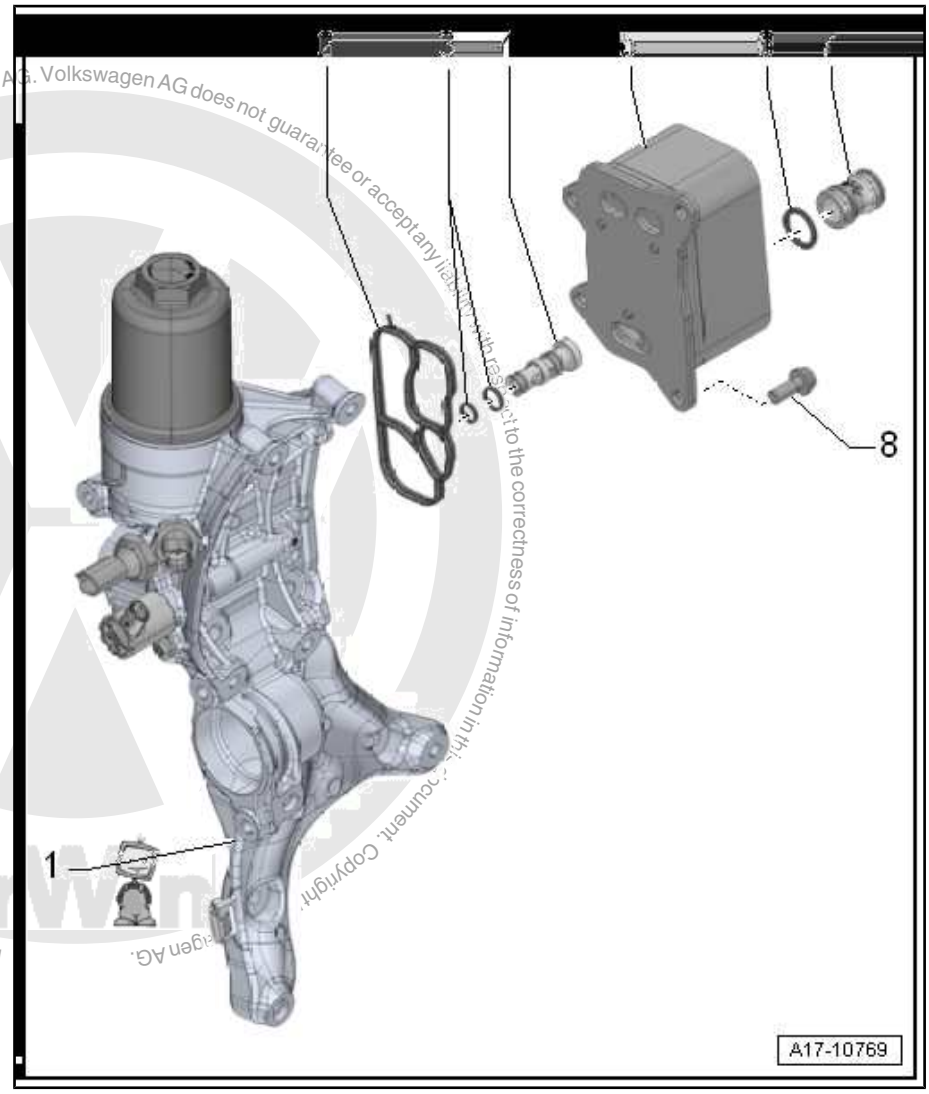

1 - Auxiliary Components Bracket

- ❑ Removing and installing. Refer to ⇒ "1.5 Auxiliary Components Bracket, Removing and Installing", page 53 .

2 - Seal

- ❑ Replace after removing

3 - O-Rings

- ❑ Replace after removing
- ❑ Coat with engine oil

4 - Mechanical Switch Valve

- ❑ Replacing. Refer to ⇒ "2.3 Mechanical Switch Valve, Removing and Installing", page 194 .

5 - Engine Oil Cooler

- ❑ See note. Refer to ⇒ "1 Oil Pan/Oil Pump", page 179 .
- ❑ Removing and installing. Refer to ⇒ "2.2 Engine Oil Cooler, Removing and Installing", page 192 .

6 - Seal

- ❑ Replace after removing
- ❑ Coat with coolant

7 - Connection

8 - Bolt

- ❑ 8 Nm + 45° turn
- ❑ Replace after removing

2.2 Engine Oil Cooler, Removing and Installing

Special tools and workshop equipment required

- ♦ Shop Crane - Drip Tray - VAS6208-

Caution

This procedure contains mandatory replaceable parts. Refer to component overview prior to starting procedure.

Mandatory Replacement Parts

- Seal - Engine Oil Cooler

Removing

CAUTION

The coolant system is under pressure when the engine is warm. Risk of scalding due to hot steam and hot coolant.

Possibility of burning or scalding the skin and other parts of the body.

- **Wear safety gloves.**
- **Wear protective eyewear.**
- **Reduce the pressure: cover the coolant reservoir cap with a cloth and carefully open.**

– Drain the coolant. Refer to ⇒ “1.3 Coolant, Draining and Filling”, page 217 .

– Remove the auxiliary components bracket. Refer to ⇒ “1.5 Auxiliary Components Bracket, Removing and Installing”, page 53 .

– Remove the bolts -4 and 5- and remove the engine oil cooler -3- together with the seal -2-.

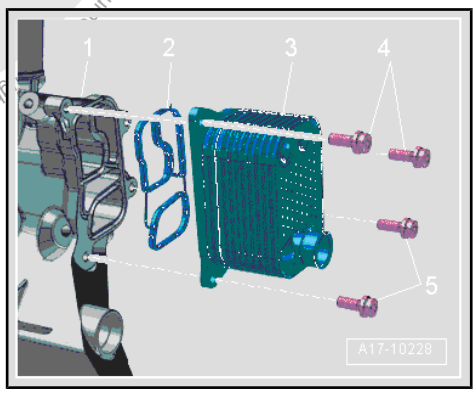

Installing

Install in reverse order of removal. Note the following:

Note

- *Always replace gaskets and seals.*
- *Secure hose connections with standard production clamps. Refer to the Parts Catalog.*

– Install the engine oil cooler -3- with a new seal -2-.

– Install the accessory assembly bracket. Refer to ⇒ “1.5 Auxiliary Components Bracket, Removing and Installing”, page 53 .

– Fill with coolant. Refer to ⇒ page 218 .

– Fill with engine oil and then check the level. Refer to ⇒ Maintenance ; Booklet 36.1 ; Procedure Descriptions; Engine Oil, Draining, Replacing Oil Filter, and Filling .

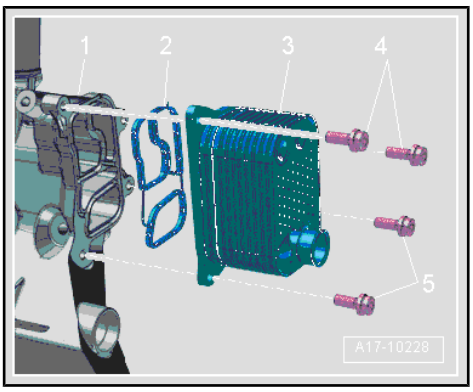

Tightening Specifications

- Refer to ⇒ “2.1 Overview - Engine Oil Cooler”, page 192 .

Volkswagen AG does not guarantee or accept any liability with respect to the correctness of information in this document. Copyright by Volkswagen AG.

2.3 Mechanical Switch Valve, Removing and Installing

Removing

Caution

This procedure contains mandatory replaceable parts. Refer to component overview prior to starting procedure.

Mandatory Replacement Parts

- O-rings - Mechanical Switch Valve

– Remove the oil cooler. Refer to ⇒ “2.2 Engine Oil Cooler, Removing and Installing”, page 192 .

– Remove the mechanical switch valve -1- from the auxiliary components bracket in direction of -arrow-.

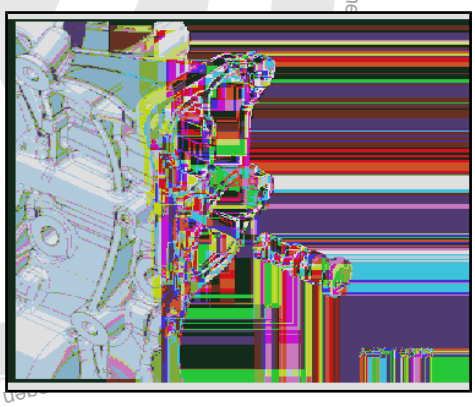

Installing

Install in reverse order of removal. Note the following:

Note

- *Always replace gaskets O-rings and seals.*
- *Secure hose connections with standard production clamps. Refer to the Parts Catalog.*

– Coat the mechanical switch valve O-rings with engine oil and install the switch valve.

– Install the engine oil cooler. Refer to ⇒ “2.2 Engine Oil Cooler, Removing and Installing”, page 192 .

Protected by copyright. Copying for private or commercial purposes, in part or in whole, is not permitted unless authorised by Volkswagen AG. Volkswagen AG does not guarantee or accept any liability with respect to the correctne

3 Crankcase Housing Ventilation

⇒ “3.1 Overview - Crankcase Ventilation”, page 195 .

⇒ “3.2 Oil Separator, Removing and Installing”, page 196 .

3.1 Overview - Crankcase Ventilation

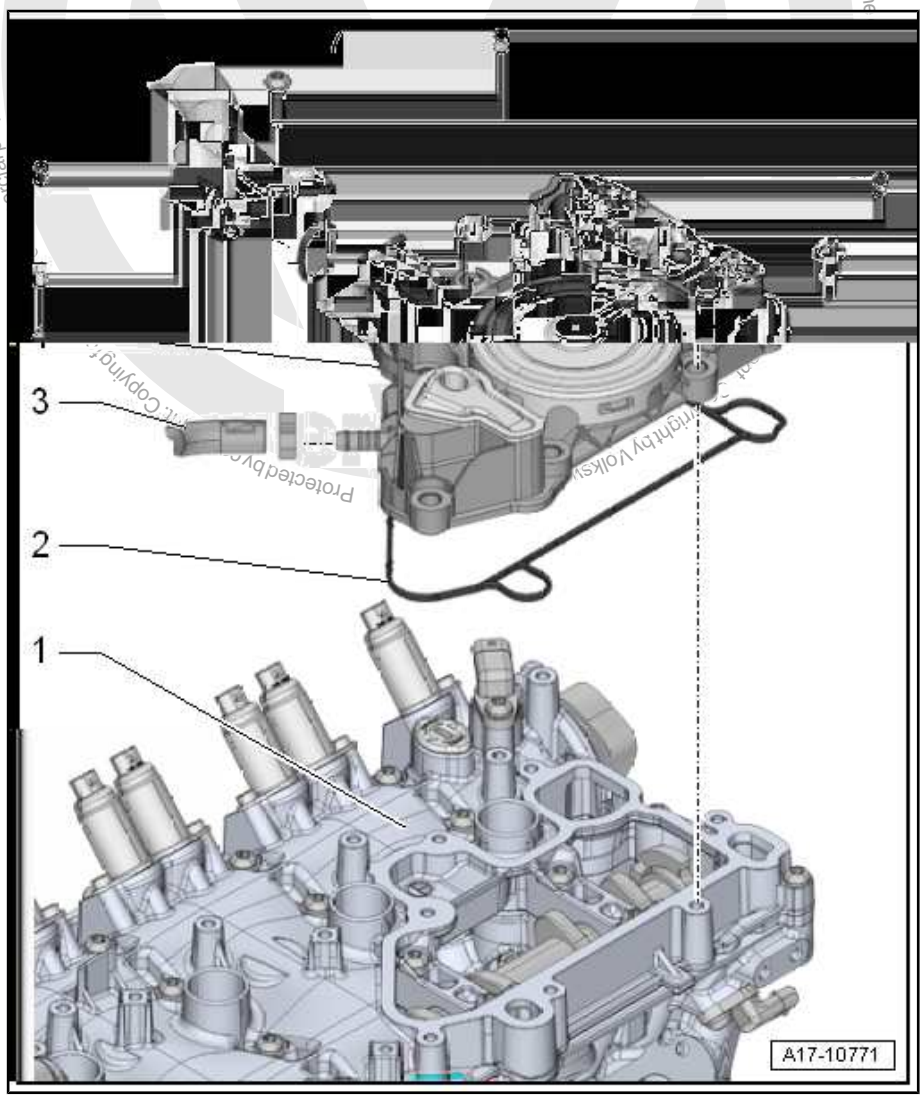

1 - Cylinder Head Cover

2 - Seal

- ❑ Replace after removing

3 - Hose

- ❑ To EVAP Canister Purge Regulator Valve 1 - N80-

4 - Oil Separator

- ❑ Removing and installing. Refer to ⇒ “3.2 Oil Separator, Removing and Installing”, page 196 .

5 - Seal

- ❑ Replace after removing

6 - Hose

- ❑ For the crankcase ventilation
- ❑ To turbocharger

7 - Bolt

- ❑ 4 Nm
- ❑ Self-tapping
- ❑ Position the bolt by hand and tighten it until it finds the old threads. Then tighten the bolt to the specification.

8 - Seal

- ❑ Replace after removing

9 - Bolt

- ❑ Self-tapping
- ❑ Position the bolt by hand and tighten it until it finds the old threads. Then tighten the bolt to the specification.
- ❑ Tightening specification and sequence. Refer to ⇒ Fig. ““Oil Separator - Tightening Sequence”“ , page 196 .

Protected by copyright. Copying for private or commercial purposes, in part or in whole, is not permitted unless authorised by Volkswagen AG. Volkswagen AG does not guarantee or accept any liability with respect to the

Oil Separator - Tightening Sequence

– Tighten the bolts in the sequence -1 through 7-.

Bolts	Tightening Sequence and Torque Specification
-1 through 7-	9 Nm.

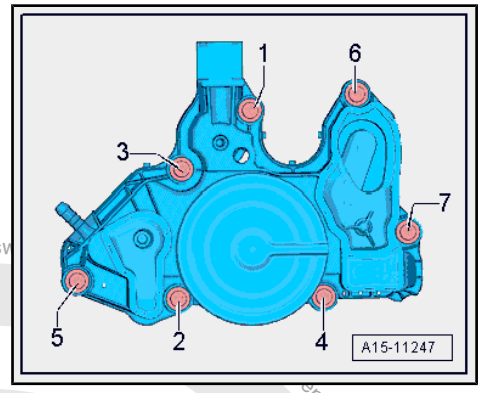

3.2 Oil Separator, Removing and Installing

Removing

Caution

This procedure contains mandatory replaceable parts. Refer to component overview prior to starting procedure.

Mandatory Replacement Parts

- ♦ Seal - Oil Separator
- ♦ Seals - Oil Separator to Crankcase Hose

– Disconnect the ignition coil sensors connectors and remove them from the ignition coils at the same time.

– Remove the ignition coils bolts “3, 4”, and remove the ignition coils.

– Loosen the hose clamp -1- and remove the hose from EVAP Canister Purge Regulator Valve 1 - N80-.

– Remove bolt -2- and then remove crankcase ventilation hose -3- from oil separator.

– Remove the bolts -arrows- and the oil separator.

Installing

Install in reverse order of removal. Note the following:

Note

- ♦ *Always replace gasket and seals.*
- ♦ *Secure hose connections with standard production clamps. Refer to the Parts Catalog.*

Tightening Specifications

- ♦ Refer to
⇒ “3.1 Overview - Crankcase Ventilation”, page 195 .

Protected by copyright. Copying for private or commercial purposes, in part or in whole, is not permitted unless authorised by Volkswagen AG. Volkswagen AG does not guarantee or accept any liability with respect to the correctness of information in this document. Copyright by Volkswagen AG.

4 Oil Filter/Oil Pressure Switch

⇒ “4.1 Overview - Oil Filter”, page 197 .

⇒ “4.2 Overview - Oil Pressure Switch/Oil Pressure Regulator Valve”, page 198 .

⇒ “4.3 Oil Pressure Switch F1 , Removing and Installing”, page 199 .

⇒ “4.4 Reduced Oil Pressure Switch F378 , Removing and Installing”, page 200 .

⇒ “4.5 Oil Pressure Switch, Level 3 F447 , Removing and Installing”, page 201 .

⇒ “4.6 Oil Pressure, Checking”, page 202 .

4.1 Overview - Oil Filter

1 - Auxiliary Components Bracket

- ❑ Removing and installing. Refer to ⇒ “1.5 Auxiliary Components Bracket, Removing and Installing”, page 53 .

2 - Seal

- ❑ Replace after removing

3 - Oil Filter

- ❑ Removing and installing. Refer to ⇒ Maintenance ; Booklet 36.1 ; Procedure Descriptions; Engine Oil, Draining, Replacing Oil Filter, and Filling .

4 - O-Ring

- ❑ Replace after removing
- ❑ Coat with engine oil

5 - Oil Filter Housing

- ❑ 25 Nm

6 - Oil Drain Supports

7 - O-Rings

- ❑ No replacement part, part of the valve unit delivery package -item 6- ⇒ Item 6 (page 197) .

8 - Bolt

- ❑ Tightening specification and sequence. Refer to ⇒ Fig. “Accessory Assembly Bracket - Tightening Specifications and Tightening Sequence”“ , page 45 .

Protected by copyright. Copying for private or commercial purposes, in part or in whole, is not permitted unless authorised by Volkswagen AG. Volkswagen AG

4.2 Overview - Oil Pressure Switch/Oil Pressure Regulator Valve

1 - Bolt

- ❑ 4 Nm + 90° turn
- ❑ Replace after removing

2 - Oil Pressure Regulation Valve - N428-

- ❑ Checking. Refer to Vehicle Diagnostic Tester
- ❑ Removing and installing. Refer to ⇒ “4.8 Oil Pressure Regulation Valve N428 , Removing and Installing”, page 206 .

3 - O-Ring

- ❑ Replace after removing
- ❑ Coat with engine oil

4 - O-Rings

- ❑ Replace after removing
- ❑ Coat with engine oil

5 - Bolt

- ❑ 4 Nm + 45° turn
- ❑ Replace after removing

6 - Piston Cooling Nozzle Control Valve - N522-

- ❑ Checking. Refer to Vehicle Diagnostic Tester
- ❑ Removing and installing. Refer to ⇒ “4.7 Piston Cooling Nozzle Control Valve N522 , Removing and Installing”, page 205 .

7 - Seal

- ❑ Replace oil pressure switch after each time it is loosened

8 - Oil Pressure Switch - F1-

- ❑ 20 Nm
- ❑ Blue or gray insulation
- ❑ Checking. Refer to Vehicle Diagnostic Tester
- ❑ Removing and installing. Refer to ⇒ “4.3 Oil Pressure Switch F1 , Removing and Installing”, page 199 .

9 - Reduced Oil Pressure Switch - F378-

- ❑ 20 Nm
- ❑ Brown insulation
- ❑ Checking. Refer to Vehicle Diagnostic Tester
- ❑ Removing and installing. Refer to ⇒ “4.4 Reduced Oil Pressure Switch F378 , Removing and Installing”, page 200 .

10 - Seal

- ❑ Replace oil pressure switch after each time it is loosened

11 - Seal

- ❑ Replace oil pressure switch after each time it is loosened

Protected by copyright. Copying for private or commercial purposes, in part or in whole, is not permitted. Copyright by Volkswagen AG.

12 - Oil Pressure Switch, Level 3 - F447-

- ❑ 20 Nm
- ❑ Checking. Refer to Vehicle Diagnostic Tester
- ❑ Removing and installing. Refer to
  ⇒ “4.5 Oil Pressure Switch, Level 3 F447 , Removing and Installing”, page 201 .
- ❑ Installed position. Refer to ⇒ Fig. “" Oil Pressure Switch, Level 3 -F447- Installed Position"“ , page 199

Oil Pressure Switch, Level 3 - F447- Installed Position

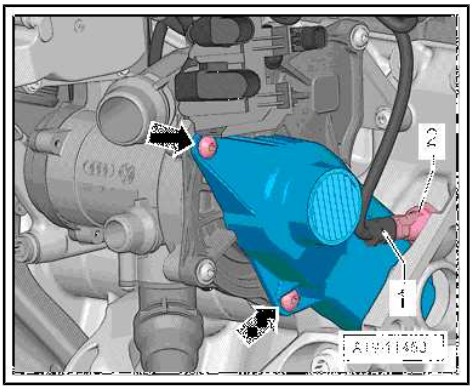

4.3 Oil Pressure Switch - F1- , Removing and Installing

Special tools and workshop equipment required

- ♦ Socket and Jointed Extension - 24mm - T40175-

> **Caution**
>
> *This procedure contains mandatory replaceable parts. Refer to component overview prior to starting procedure.*

Mandatory Replacement Parts

- ♦ Seal - Oil Pressure Switch

Removing

Note

- ♦ *Place a cloth under the accessory assembly bracket to collect leaking engine oil.*
- ♦ *Replace the seal after each time the oil pressure switch is loosened.*

– Disconnect the connector -arrow- from the Oil Pressure Switch - F1- .

Protected by copyright. Copying for private or commercial purposes, in part or in whole, is not permitted unless authorised by Volkswagen AG. Volkswagen AG does not guarantee or accept any liability with respect to the correctness of information in this document. Copyright by Volkswagen AG.

– Remove the Oil Pressure Switch -1-.

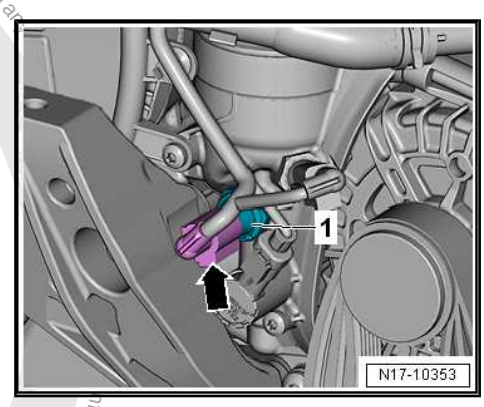

Installing

Note

To prevent oil loss, insert the Oil Pressure Switch - F1- in the opening immediately.

Install in reverse order of removal. Note the following:

– Check the oil level. Refer to ⇒ Maintenance ; Booklet 36.1 ; Procedure Descriptions; Engine Oil Level, Checking .

Tightening Specifications

- Refer to
⇒ "4.2 Overview - Oil Pressure Switch/Oil Pressure Regulator Valve", page 198 .

4.4 Reduced Oil Pressure Switch - F378- , Removing and Installing

Special tools and workshop equipment required

- Socket and Jointed Extension - 24mm - T40175-

Caution

This procedure contains mandatory replaceable parts. Refer to component overview prior to starting procedure.

Mandatory Replacement Parts

- Seal - Reduced Oil Pressure Switch

Removing

Note

- *Place a cloth under the accessory assembly bracket to collect leaking engine oil.*
- *Replace the seal after each time the oil pressure switch is loosened.*

– Disconnect the electrical connector -arrow- on the Reduced Oil Pressure Switch - F378- .

– Remove the Reduced Oil Pressure Switch -1-.

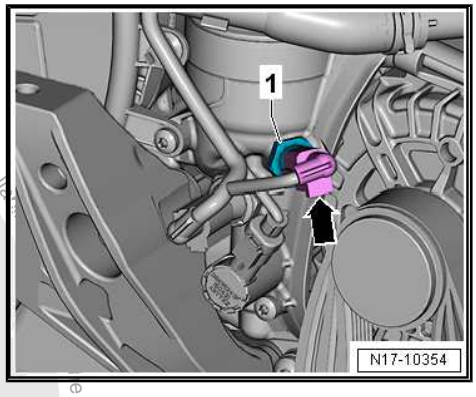

Installing

Install in reverse order of removal. Note the following:

Note

Insert the Reduced Oil Pressure Switch - F378- immediately to prevent losing any engine oil.

– Check the oil level. Refer to ⇒ Maintenance ; Booklet 36.1 ; Procedure Descriptions; Engine Oil Level, Checking .

Tightening Specifications

♦ Refer to
⇒ "4.2 Overview - Oil Pressure Switch/Oil Pressure Regulator Valve", page 198 .

4.5 Oil Pressure Switch, Level 3 - F447- , Removing and Installing

Special tools and workshop equipment required

♦ Socket and Jointed Extension - 24mm - T40175-

Caution

This procedure contains mandatory replaceable parts. Refer to component overview prior to starting procedure.

Mandatory Replacement Parts

♦ Seal - Oil Pressure Switch, Level 3

Note

Replace the seal after each time the oil pressure switch is loosened.

Removing

– Remove the noise insulation. Refer to ⇒ Body Exterior; Rep. Gr. 66 ; Noise Insulation; Overview - Noise Insulation .

– Remove the air filter housing. Refer to
⇒ "3.2 Air Filter Housing, Removing and Installing", page 294 .

– Free up the wiring harness -1 and 2- from the air guide pipe.

– Loosen the screw-type clamp -3-.

Copyright by Volkswagen AG. Volkswagen AG does not guarantee or accept any liability for the correctness of information in this document. Copyright by Volkswagen AG. Protected by copyright. Copying for private or commercial purposes, in part or in whole, is not permitted unless authorised by Volkswagen AG.

– Remove the bolts -arrows-, loosen the screw-type clamp and remove the air guide pipe.

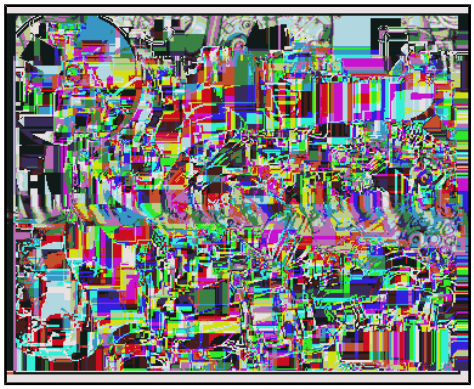

– Disconnect the connector -1- from the Oil Pressure Switch, Level 3 - F447- .

– Remove the bolts -arrows- and remove the toothed belt cover.

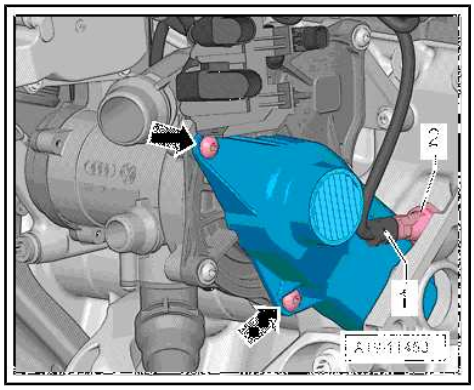

Note

Place a cleaning cloth underneath, to catch oil leaking out.

– Remove the Oil Pressure Switch, Level 3 - F447- -2- using the Socket and Jointed Extension - 24mm - T40175- .

Installing

Install in reverse order of removal. Note the following:

Note

To prevent coolant loss, install the Oil Pressure Switch, Level 3 - F447- in the hole immediately.

– Check the oil level. Refer to ⇒ Maintenance ; Booklet 36.1 ; Procedure Descriptions; Engine Oil Level, Checking .

Tightening Specifications

- Refer to ⇒ “4.2 Overview - Oil Pressure Switch/Oil Pressure Regulator Valve”, page 198 .
- Refer to ⇒“3.1 Overview - Air Filter Housing”, page 293 .
- Refer to ⇒ Body Exterior; Rep. Gr. 66 ; Noise Insulation; Overview - Noise Insulation .

4.6 Oil Pressure, Checking

⇒ “4.6.1 Engine Oil Pressure, Checking”, page 202 .

⇒ “4.6.2 Piston Spray Nozzles Oil Pressure, Checking”, page 204 .

4.6.1 Engine Oil Pressure, Checking

Special tools and workshop equipment required

- Oil Pressure Gauge Kit - VAG1342-
- Socket and Jointed Extension - 24mm - T40175-

Test Prerequisites

- Oil level OK

Copyright by Volkswagen AG. Volkswagen AG does not guarantee or accept any liability with respect to the correctness of information in this document. Copyright by Volkswagen AG. Copyright by Volkswagen AG. Copying or forwarding to third parties is not permitted unless authorised by Volkswagen AG.

- The engine oil temperature at least 80 °C (176 °F) (the coolant fan must start up once).

Note

- *The oil pump is regulated and has two pressure stages. The pressure stages are checked one after the other.*
- *During the break-in phase or in engine emergency running mode the oil pump only pumps in the higher pressure stage.*
- *The oil pressure depends on the engine oil temperature. At an engine oil temperature of 80 °C (176 °F) approximately the average must be reached.*

– After installing new parts (engine/partial engine, cylinder head or turbocharger) limit the oil pressure regulation for approximately 1000 km to the higher pressure stage. From this, the higher friction is taken into account when breaking in new components, and the optimum removal of particles from the initial wear in is ensured. To do this connect the vehicle diagnostic tester, switch on the ignition and select the following menu items:

- `01 - Engine electronics`
- `Guided functions`
- `01 - Oil Pressure Regulation/Retraction Activating`

Test Sequence

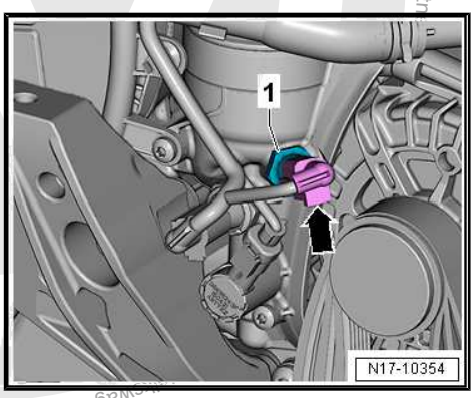

– Disconnect the electrical connector -arrow- on the Reduced Oil Pressure Switch - F378-.
– Place a cloth under the accessory assembly bracket to collect leaking engine oil.
– Remove the Reduced Oil Pressure Switch - F378- -1-.
– Screw the Oil Pressure Gauge Kit - VAG1342- into the oil filter bracket in place of the oil pressure switch.
– Push the Reduced Oil Pressure Switch - F378- in the Oil Pressure Tester and connect the connector.
– Connect the Oil Pressure Tester to the ground.
– Start the engine and check the oil pressure of the specified RPMs.

- Oil pressure at idle: 0.85 to 1.6 bar (12.3 to 23.2 psi)
- Oil pressure at 2,000 RPM: 1.2 to 1.6 bar (17.4 to 23.2 psi)
- Oil pressure at 3,700 RPM: 1.2 to 1.6 bar (17.4 to 23.2 psi)

– Turn off the engine.
– Remove the noise insulation. Refer to ⇒ Body Exterior; Rep. Gr. 66 ; Noise Insulation; Overview - Noise Insulation .

Protected by copyright. Copying for private or commercial purposes, in part or in whole, is not permitted unless authorised by Volkswagen AG. Volkswagen AG does not guarantee or accept any liability with respect to the correctn

– Remove the connector -1- from the Oil Pressure Regulation Valve - N428- . Unclip the cable and route downward so that is not in the belt drive unit. With the connector removed the oil pump only pumps in the higher pressure stage.

– Start the engine and check the oil pressure of the specified RPMs.

• Oil pressure at idle: 0.85 to 4.0 bar (12.3 to 43 psi)

• Oil pressure at 2,000 RPM: 2.0 to 2.4 bar (29 to 34.8 psi)

• Oil pressure at 3,700 RPM: 3 to 4 bar (43 to 58 psi)

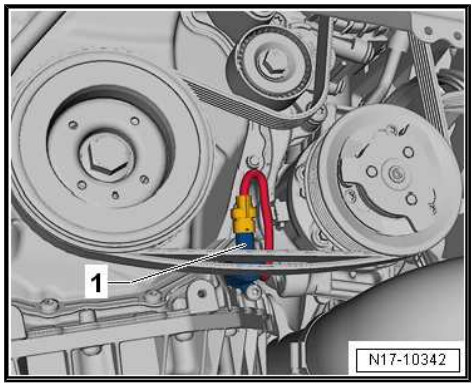

Assembling

– Install the oil pressure switch.

– Connect the connector -1- to the Oil Pressure Regulation Valve - N428- . Carefully route the cable.

– Install the noise insulation. Refer to ⇒ Body Exterior; Rep. Gr. 66 ; Noise Insulation; Overview - Noise Insulation .

– Check the engine control module Diagnostic Trouble Code (DTC) memory and erase any entries.

Tightening Specifications

♦ Refer to
⇒ “4.2 Overview - Oil Pressure Switch/Oil Pressure Regulator Valve”, page 198 .

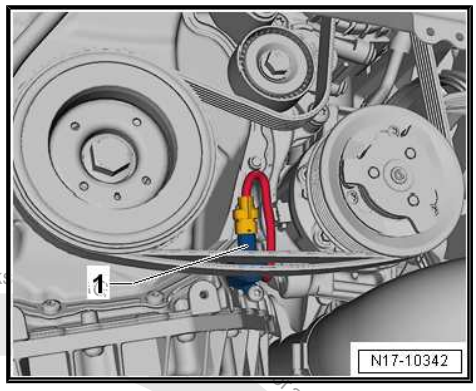

4.6.2 Piston Spray Nozzles Oil Pressure, Checking

Special tools and workshop equipment required

♦ Oil Pressure Gauge Kit - VAG1342-

♦ Socket and Jointed Extension - 24mm - T40175-

Test Prerequisites

• Oil level OK

• The engine oil temperature at least 80 °C (176 °F) (the coolant fan must start up once).

Test Sequence

– Remove the Oil Pressure Switch, Level 3 - F447- . Refer to
⇒ “4.5 Oil Pressure Switch, Level 3 F447 , Removing and Installing”, page 201 .

– Install the Oil Pressure Gauge Kit - VAG1342- in place of the oil pressure switch.

Note

Risk of damaging the oil pressure tester. The hose from the oil pressure tester must not come in contact with the coolant pump toothed belt sprocket.

Copyright by Volkswagen AG. Volkswagen AG does not accept any liability with respect to the correctness of information in this document. Copyright by Volkswagen AG. Copying for private or commercial purposes, in part or in whole, is not permitted unless authorised by Volkswagen AG.

– The threaded hole in the Oil Pressure Gauge Kit - VAG1342- must be closed. If necessary install the Oil Pressure Switch, Level 3 - F447- .

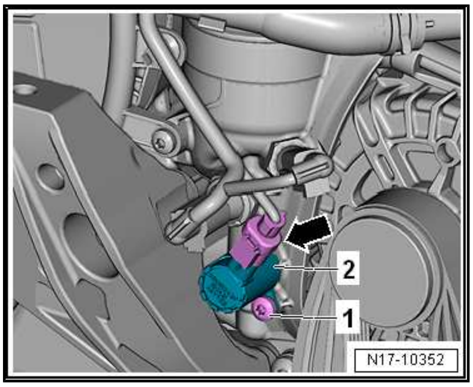

– Remove the connector -arrow- from the Piston Cooling Nozzle Control Valve - N522- . With the connector removed the oil filler hole to the piston cooling is opened.

– Place the air guide pipe back on the hose connections, so that the engine can be started.

– Start the engine and check the oil pressure.

• Oil pressure at idle: minimum 0.60 bar (8.7 psi).

Assembling

– Install the oil pressure switch.

Tightening Specifications

♦ Refer to ⇒ “4.2 Overview - Oil Pressure Switch/Oil Pressure Regulator Valve”, page 198 .

4.7 Piston Cooling Nozzle Control Valve - N522- , Removing and Installing

Removing

> **Caution**
>
> *This procedure contains mandatory replaceable parts. Refer to component overview prior to starting procedure.*

Mandatory Replacement Parts

♦ Bolt - Piston Cooling Nozzle Control Valve

♦ O-rings - Piston Cooling Nozzle Control Valve

Note

Place a cloth under the accessory assembly bracket to collect leaking engine oil.

– Disconnect the connector -arrow- from the Piston Cooling Nozzle Control Valve - N522- .

Protected by copyright. Copying for private or commercial purposes, in part or in whole, is not permitted unless authorised by Volkswagen AG. Volkswagen AG does not guarantee or accept any liability with respect to the correctness of information in this document. Copyright by Volkswagen AG.

– Remove the bolt -1- and remove the Piston Cooling Nozzle Control Valve - N522- -2-.

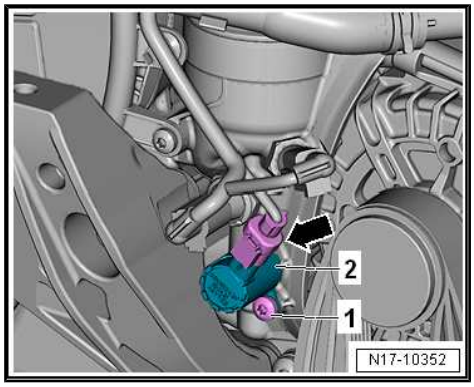

Installing

Install in reverse order of removal. Note the following:

Note

- *Replace the O-rings.*
- *To prevent oil loss insert the Piston Cooling Nozzle Control Valve - N522- immediately in the opening.*

– Check the oil level. Refer to ⇒ Maintenance ; Booklet 36.1 ; Procedure Descriptions; Engine Oil Level, Checking .

Tightening Specifications

- Refer to
⇒ “4.2 Overview - Oil Pressure Switch/Oil Pressure Regulator Valve”, page 198

4.8 Oil Pressure Regulation Valve - N428- , Removing and Installing

Special tools and workshop equipment required

- Used Oil Collection and Extraction Unit - SMN372500-

Caution

This procedure contains mandatory replaceable parts. Refer to component overview prior to starting procedure.

Mandatory Replacement Parts

- O-ring - Oil Pressure Regulation Valve
- Bolt - Oil Pressure Regulation Valve

Removing

– Remove the noise insulation. Refer to ⇒ Body Exterior; Rep. Gr. 66 ; Noise Insulation; Overview - Noise Insulation .

– Remove the ribbed belt. Refer to
⇒ “1.2 Ribbed Belt, Removing and Installing”, page 46 .

– Place the Used Oil Collection and Extraction Unit - SMN372500- under the engine.

– Disconnect the connector -1-.

Protected by copyright. Copying for private or commercial purposes in part or in whole is not permitted unless authorised by Volkswagen AG. Volkswagen AG does not guarantee or accept any liability with respect to the correctness of information in this document. Copyright by Volkswagen AG.

– Remove the bolt -2- and the Oil Pressure Regulation Valve - N428- .

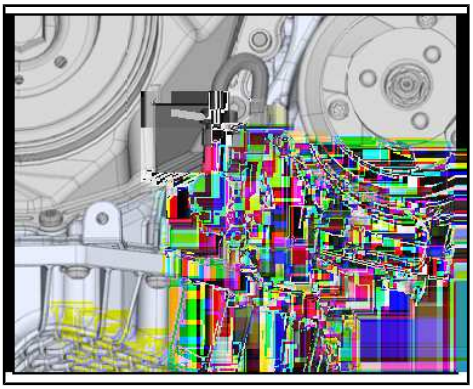

Installing

Install in reverse order of removal. Note the following:

Note

Replace the O-ring after removing.

Tightening Specifications

- Refer to ⇒ “4.2 Overview - Oil Pressure Switch/Oil Pressure Regulator Valve”, page 198
- Refer to ⇒ Body Exterior; Rep. Gr. 66 ; Noise Insulation; Overview - Noise Insulation .

Protected by copyright. Copying for private or commercial purposes, in part or in whole, is not permitted unless authorised by Volkswagen AG. Volkswagen AG does not guarantee or accept any liability with respect to the correctness of information in this document. Copyright by Volkswagen AG.

5 Special Tools

Special tools and workshop equipment required

- Used Oil Collection and Extraction Unit - SMN372500-

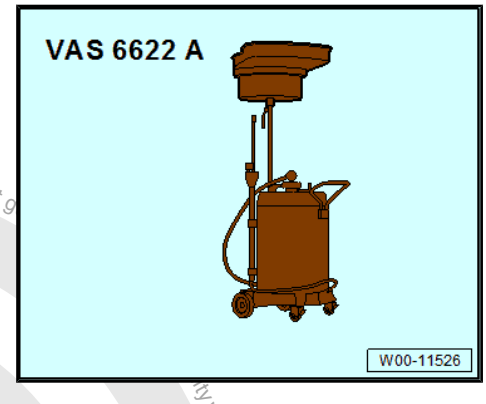

- Elbow Assembly Tool - T10118-

- Socket and Jointed Extension - 24mm - T40175-

- Chain Tensioner Locking Tool - T40265-

Protected by copyright. Copying for private or commercial purposes, in part or in whole, is not permitted unless authorised by Volkswagen AG. Volkswagen AG does not g

- Oil Pressure Gauge Kit - VAG1342-

- Shop Crane - Drip Tray - VAS6208-

- Not Illustrated:
- Oil Drain Plug Assembly Tool - T10549-

Protected by copyright. Copyright by Volkswagen AG.

19 – Cooling System

1 Cooling System/Coolant

⇒ “1.1 Connection Diagram - Coolant Hoses”, page 210

⇒ “1.2 Coolant System, Checking for Leaks”, page 216

⇒ “1.3 Coolant, Draining and Filling”, page 217

1.1 Connection Diagram - Coolant Hoses

⇒ “1.1.1 Coolant Hose Connection Diagram, Vehicles with Manual Transmission”, page 210 .

⇒ “1.1.2 Coolant Hose Connection Diagram, Vehicles with a DSG® Transmission without Recirculation Pump V55 ”, page 212 .

1.1.1 Coolant Hose Connection Diagram, Vehicles with Manual Transmission

Note

- *Blue = large coolant circuit.*
- *Red = small coolant circuit.*
- *Brown = heating circuit*
- *Yellow = transmission fluid cooling circuit*
- *The arrows show the coolant flow direction.*

Protected by copyright. Copyright by Volkswagen AG. Volkswagen AG does not guarantee or accept any liability with respect to the correctness of information in this document. Copyright by Volkswagen AG.

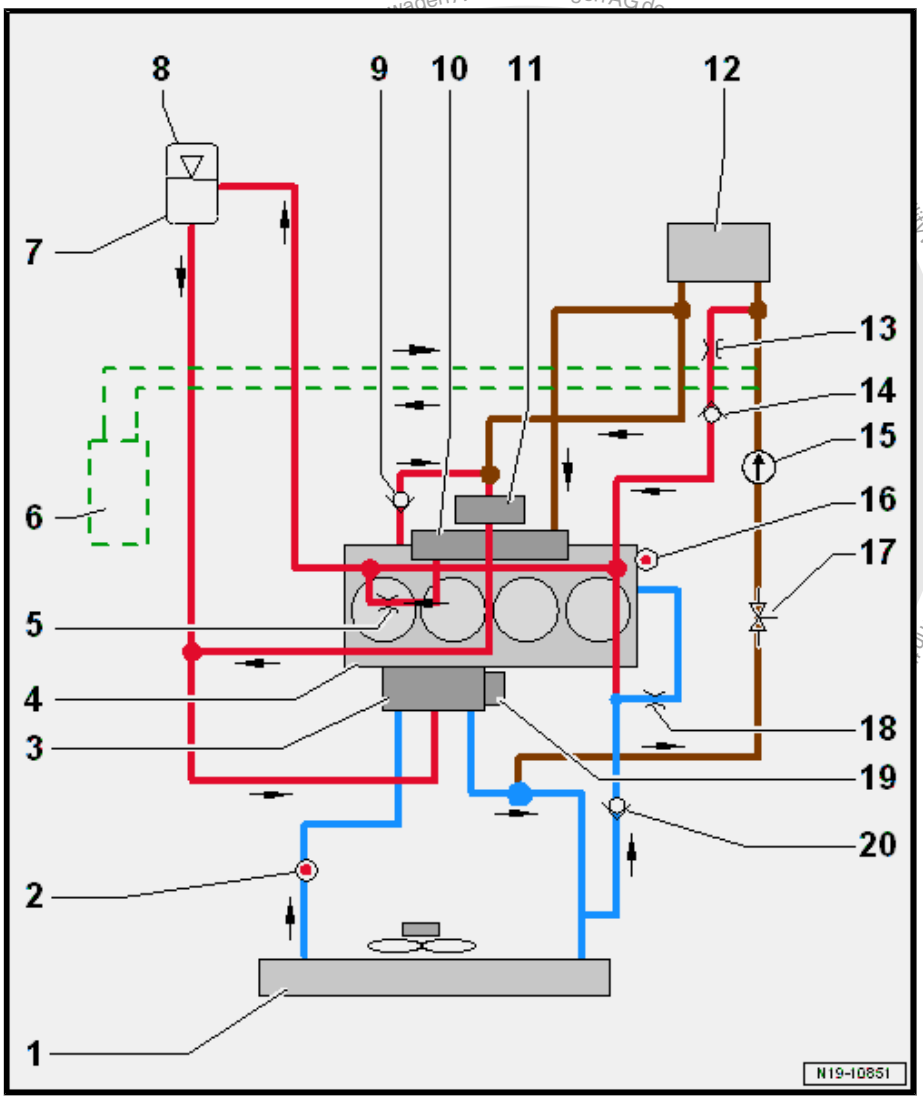

1 - Radiator

- ❑ Change the coolant after replacing

2 - Engine Coolant Temperature Sensor on Radiator Outlet - G83-

3 - Engine Temperature Control Actuator - N493-

4 - Cylinder Head/Cylinder Block

- ❑ Change the coolant after replacing

5 - Restrictor

6 - Parking Heater

- ❑ Vehicles versions

7 - Coolant Expansion Tank

8 - Coolant Expansion Tank Cap

- ❑ Check the pressure relief valve. Refer to ⇒ page 217 .

9 - Check Valve

10 - Exhaust Manifold

- ❑ Integrated in cylinder head

11 - Turbocharger

12 - Heater Core for Heater

- ❑ Change the coolant after replacing

13 - Restrictor

14 - Check Valve

15 - After-Run Coolant Pump - V51-

16 - Engine Coolant Temperature Sensor - G62-

17 - Coolant Shut-Off Valve - N82-

18 - Restrictor

19 - Coolant Pump

20 - Check Valve

1.1.2 Coolant Hose Connection Diagram, Vehicles with a DSG® Transmission without Recirculation Pump - V55-

Note

- *Blue = large coolant circuit.*
- *Red = small coolant circuit.*
- *Brown = heating circuit*
- *Yellow = transmission fluid cooling circuit*
- *The arrows show the coolant flow direction.*

1 - Radiator

- ❑ Change the coolant after replacing

2 - Engine Coolant Temperature Sensor on Radiator Outlet - G83-

3 - Engine Temperature Control Actuator - N493-

4 - Cylinder Head/Cylinder Block

- ❑ Change the coolant after replacing

5 - Restrictor

6 - Parking Heater

- ❑ Vehicles versions

7 - Coolant Expansion Tank

8 - Coolant Expansion Tank Cap

- ❑ Checking the pressure relief valve. Refer to ⇒ page 217 .

9 - Check Valve

10 - Exhaust Manifold

- ❑ integrated in cylinder head

11 - Turbocharger

12 - Heater Core for Heater

- ❑ Change the coolant after replacing

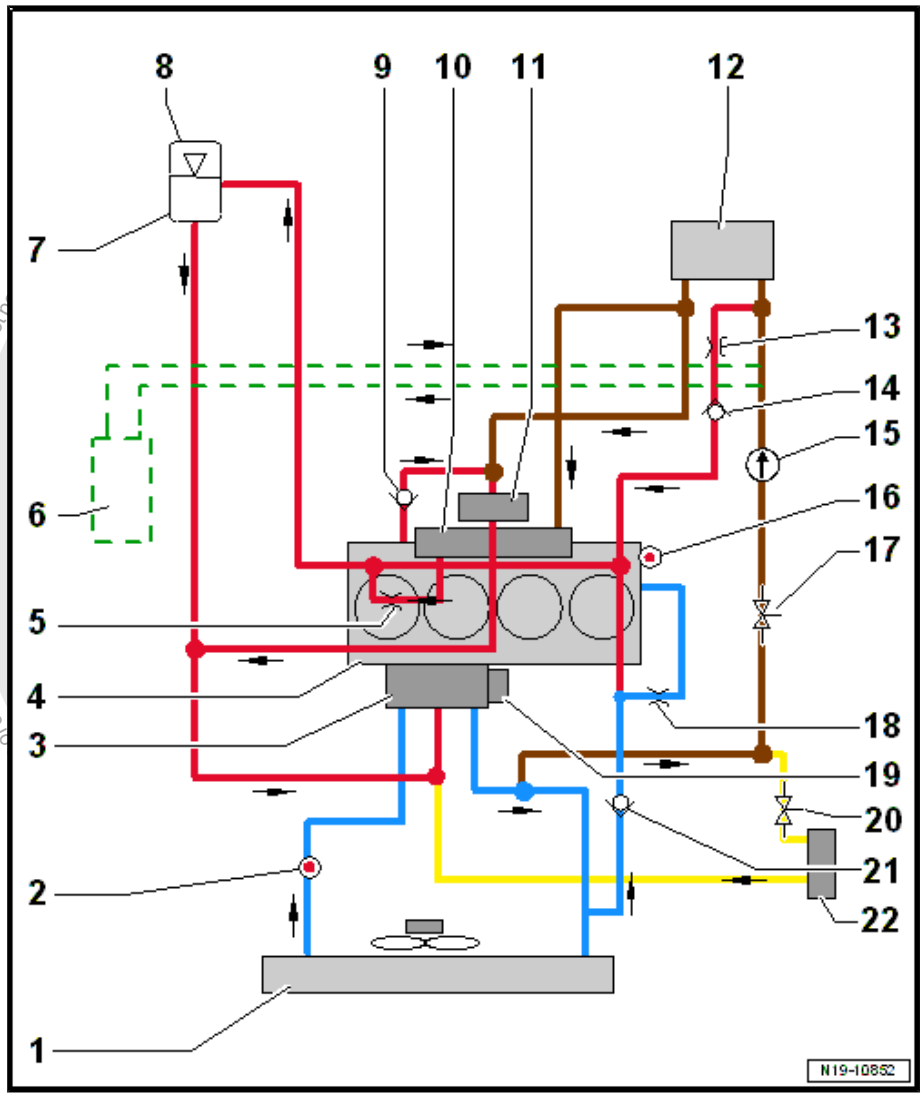

or commercial purposes, in part or in whole, is not p

13 - Restrictor

14 - Check Valve

15 - After-Run Coolant Pump - V51-

16 - Engine Coolant Temperature Sensor - G62-

17 - Coolant Shut-Off Valve - N82-

18 - Restrictor

19 - Coolant Pump

20 - Coolant Shut-Off Valve - N82-

21 - Check Valve

22 - transmission fluid cooling circuit

1.1.3 Coolant Hose Connection Diagram, Vehicles with a DSG® Transmission with Recirculation Pump - V55-

Note

- *Blue = large coolant circuit.*
- *Red = small coolant circuit.*
- *Brown = heating circuit*
- *Yellow = transmission fluid cooling circuit*
- *The arrows show the coolant flow direction.*

Protected by copyright. Copying for private or commercial purposes, in part, or in whole is not permitted unless authorised by Volkswagen AG. Volkswagen AG does not guarantee or accept any liability with respect to the correctness of information in this document. Copyright by Volkswagen AG.

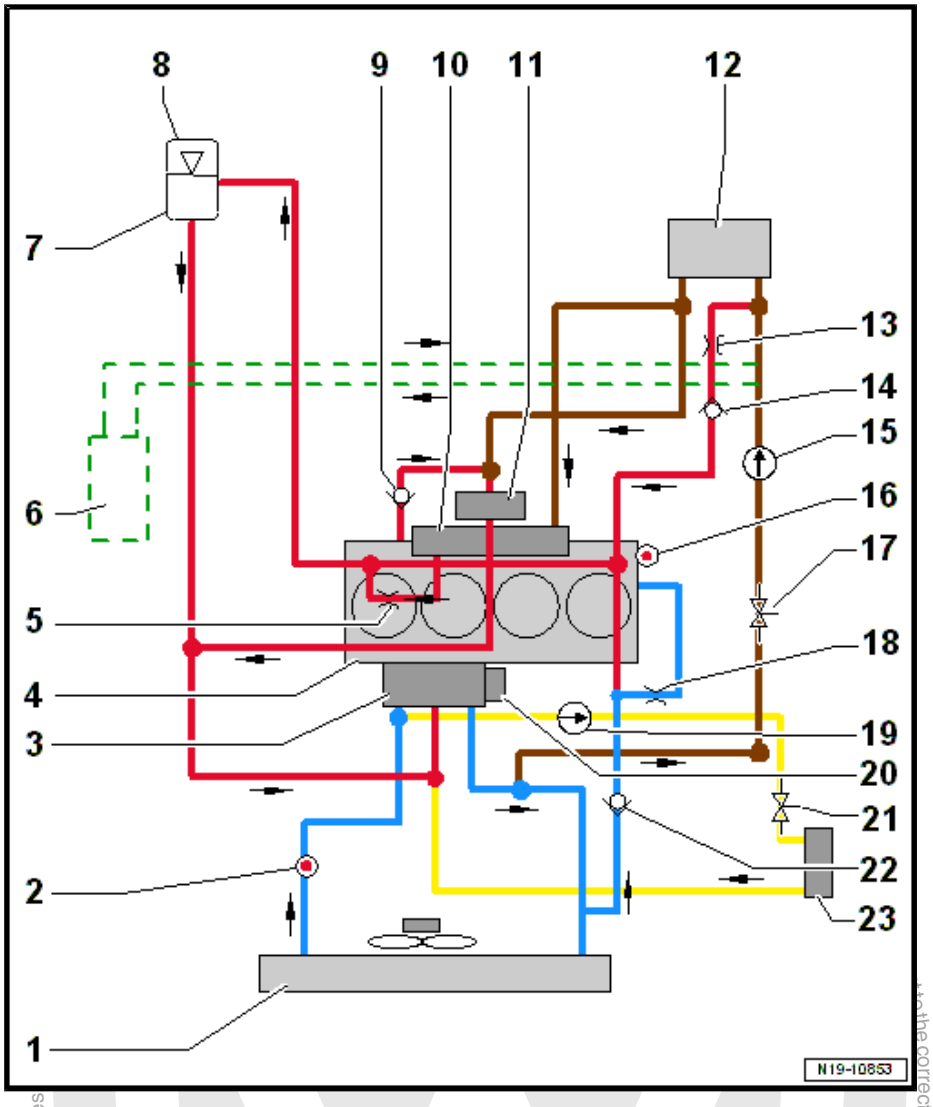

1 - Radiator
- ❑ Change the coolant after replacing

2 - Engine Coolant Temperature Sensor on Radiator Outlet - G83-

3 - Engine Temperature Control Actuator - N493-

4 - Cylinder head/cylinder block
- ❑ Change the coolant after replacing

5 - Restrictor

6 - Parking Heater
- ❑ Vehicles versions

7 - Coolant reservoir

8 - Coolant Reservoir Cap
- ❑ Check the pressure relief valve. Refer to ⇒ page 217 .

9 - Check Valve

10 - Exhaust Manifold
- ❑ integrated in cylinder head

11 - Turbocharger

12 - Heater core for heater
- ❑ Change the coolant after replacing

13 - Restrictor

14 - Check Valve

15 - After-Run Coolant Pump - V51-

16 - Engine Coolant Temperature Sensor - G62-

17 - Coolant Shut-Off Valve - N82-

18 - Restrictor

19 - Recirculation Pump - V55-

20 - Coolant Pump

21 - Coolant Shut-Off Valve - N82-

22 - Check Valve

23 - transmission fluid cooling circuit

Protected by copyright. Copying for private or commercial purposes, in the correctness of information in this document. Copyright by Volkswagen AG.

1.1.4 Coolant Hose Connection Diagram, Vehicles with DSG® Transmission and Auxiliary Cooler

Note

- *Blue = large coolant circuit.*
- *Red = small coolant circuit.*
- *Brown = heating circuit*
- *Yellow = transmission fluid cooling circuit*
- *Green = auxiliary cooler*
- *The arrows show the coolant flow direction.*

1 - Radiator

- ❑ Change the coolant after replacing

2 - Engine Coolant Temperature Sensor on Radiator Outlet - G83-

3 - Engine Temperature Control Actuator - N493-

4 - Cylinder head/cylinder block

- ❑ Change the coolant after replacing

5 - Restrictor

6 - Coolant reservoir

7 - Coolant Reservoir Cap

- ❑ Check the pressure relief valve. Refer to ⇒ page 217 .

8 - Check Valve

9 - Exhaust Manifold

- ❑ integrated in cylinder head

10 - Turbocharger

11 - Heater core for heater

- ❑ Change the coolant after replacing

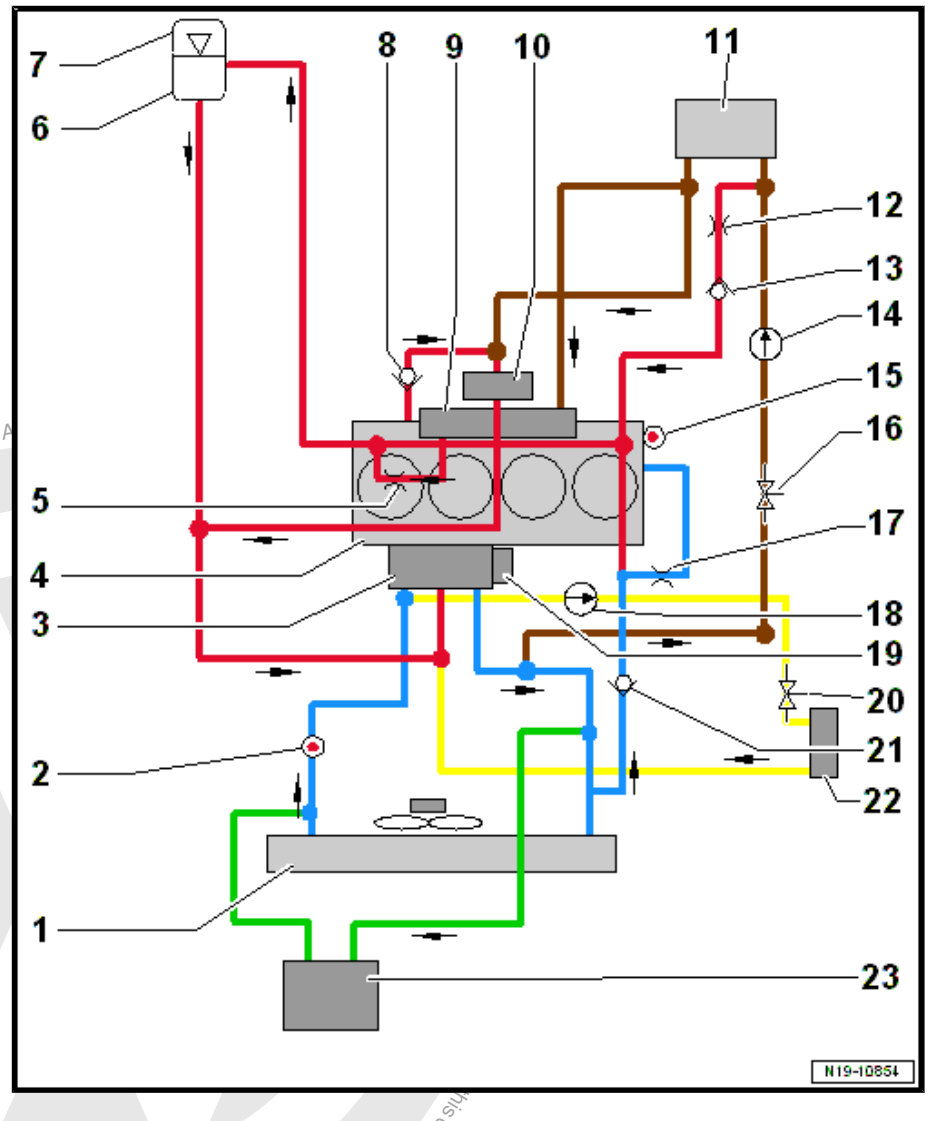

Protected by copyright. Copying for private or commercial purposes, in part or in whole, is not permitted unless authorised by Volkswagen AG. Copyright by Volkswagen AG.

12 - Restrictor

13 - Check Valve

14 - After-Run Coolant Pump - V51-

15 - Engine Coolant Temperature Sensor - G62-

16 - Coolant Shut-Off Valve - N82-

17 - Restrictor

18 - Recirculation Pump - V55-

19 - Coolant Pump

20 - Coolant Shut-Off Valve - N82-

21 - Check Valve

22 - transmission fluid cooling circuit

23 - Auxiliary Cooler

❑ Installed location: inside the right front wheel housing

1.2 Coolant System, Checking for Leaks

Special tools and workshop equipment required

- ♦ Cooling System Tester - VAG1274B-
- ♦ Cooling System Tester - Adapter - VAG1274/8-
- ♦ Cooling System Tester - Adapter - VAG1274/9-

Procedure

- Engine at operating temperature.

⚠ CAUTION

The coolant system is under pressure when the engine is warm. Risk of scalding due to hot steam and hot coolant.

Possibility of burning or scalding the skin and other parts of the body.

– Wear safety gloves.

– Wear protective eyewear.

– Reduce the pressure: cover the coolant reservoir cap with a cloth and carefully open.

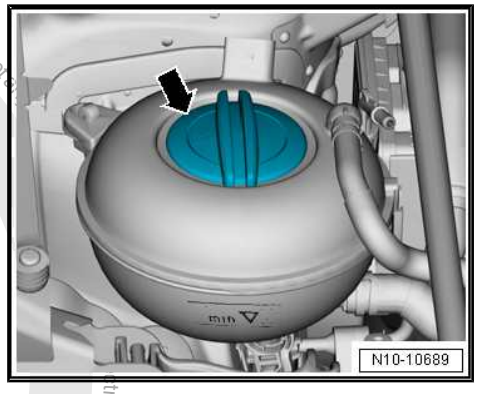

– Remove the cap -arrow- from the coolant expansion tank.

Protected by copyright. Copying for private or commercial purposes, in part or in whole, is not permitted unless authorised by Volkswagen AG. Volkswagen AG does not guarantee or accept any liability with respect to the correctness of information in this document. Copyright by Volkswagen AG.

– Position the Cooling System Tester - VAG1274B- with the adapter -VAG1274/8- on the coolant expansion tank.
– Generate approximately 1 bar pressure (14.5 psi) using the cooling system tester hand pump.
– If pressure falls, search for leaks and correct problem.

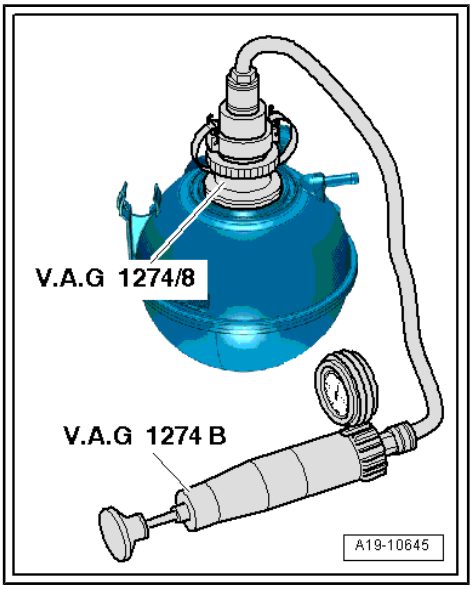

Pressure Relief Valve in Cap, Checking

– Position the Cooling System Tester - VAG1274B- with the adapter -VAG1274/9- on the cap.
– Generate pressure with cooling system tester hand pump.
• The pressure release valve must open at 1.6 to 1.8 bar (23.2 to 26.1 psi).
– If pressure relief valve does not open as specified, replace cap.

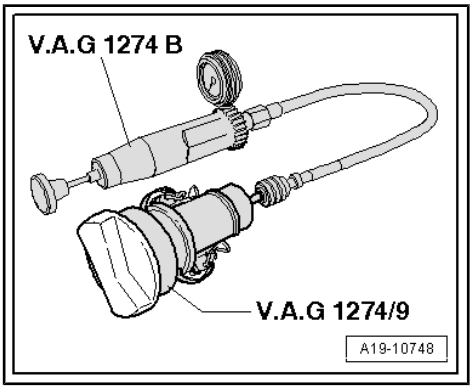

1.3 Coolant, Draining and Filling

Special tools and workshop equipment required

- Cooling System Tester - Adapter - VAG1274/8-
- Hose Clip Pliers - VAS6340-
- Cooling System Charge Kit - VAS6096-
- Shop Crane - Drip Tray - VAS6208-
- Refractometer - T10007A-
- Vehicle Diagnostic Tester
- Protective Eyewear
- Safety Gloves

Draining

⚠ CAUTION

The coolant system is under pressure when the engine is warm. Risk of scalding due to hot steam and hot coolant.

Possibility of burning or scalding the skin and other parts of the body.

– **Wear safety gloves.**
– **Wear protective eyewear.**
– **Reduce the pressure: cover the coolant reservoir cap with a cloth and carefully open.**

Protected by copyright. Copyright by Volkswagen AG. Volkswagen AG does not guarantee or accept any liability with respect to the correctness of information in this document. Copy or paste only for private or commercial purposes, in part or in whole, is not permitted unless authorised by Volkswagen AG.

– Remove the cap -arrow- from the coolant expansion tank.

– Remove the noise insulation. Refer to ⇒ Body Exterior; Rep. Gr. 66 ; Noise Insulation; Overview - Noise Insulation .

– Place the Shop Crane - Drip Tray - VAS6208- underneath.

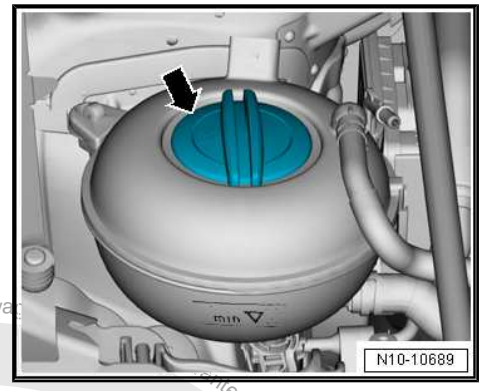

– Remove the lower right coolant hose -1- from the radiator, and drain the coolant.

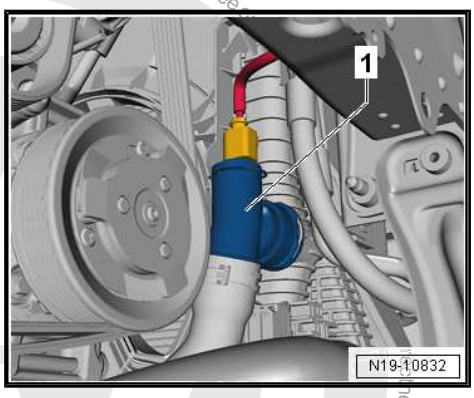

Filling

Protected by copyright. Copying for private or commercial purposes, in part or in whole, is not permitted unless authorised by Volkswagen AG. Volkswagen AG. Copyright by Volkswagen AG.

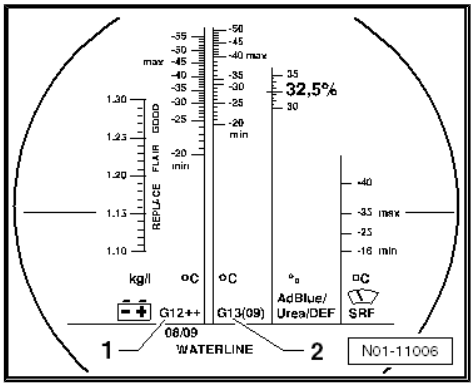

Note

- *The water portion of the coolant influences the effectiveness of the coolant. Based on the contents, the country or even the region specific quality can be different. Use distilled water. For this reason, we recommend using distilled water when adding coolant or filling coolant for the first time.*
- *Use only coolant additives listed in the Parts Catalog. Other coolant additives may above all reduce the corrosion protection effect significantly. The damage resulting from this may lead to loss of coolant and consequently to severe engine damage.*
- *Coolant with the correct mixture ratio prevents freezing and corrosion damage and calcium deposits. The boiling point will be raised. The cooling system must be filled with coolant additive year-round.*
- *Because of its high boiling point, the coolant contributes to engine reliability under heavy loads, particularly in countries with tropical climates.*
- *The Refractometer - T10007A- MUST be used to determine the freeze protection value.*
- *Protection against frost must be assured down to minimum -25 °C (-13 °F) (in arctic climatic countries down to approximately -36 °C (-33 °F)). When stronger freeze protection is needed due to the climate, the freeze protection may be increased. But only down to -48 °C (-54 °F), otherwise the effectiveness of the coolant decreases.*
- *The coolant concentration must not be reduced by adding water even in warmer seasons and in warmer countries. The frost protection must be at least -25 °C (-13 °F).*
- *Read the freeze protection value on the scale for the coolant additive that has been added.*
- *The temperature on the Refractometer - T10007A- corresponds to the »freezing point«. At this temperature, ice crystals may begin to form in the coolant.*
- *Do not reuse used coolant.*
- *Only use water/coolant additive to lubricate the coolant hoses.*

Protected by copyright. Copying for private or commercial purposes, in part or in whole, is not permitted unless authorised by Volkswagen AG. Volkswagen AG does not guarantee or accept any liability with respect to the correctness of information in this document. Copyright by Volkswagen AG.

Coolant Mixture Ratio

Frost Protection To	Portion of Coolant Additive	Coolant Additive [1]	Distilled Water [1]
-25 °C	40 %	3.2L	4.8L
-36 °C (-13 °F -32.8 °F)	50 %	4.0L	4.0L

[1] The amount of coolant may vary depending on vehicle equipment.

- Coolant. Refer to the Parts Catalog.

Procedure

– Connect coolant hose and lower right coupling -1- to the radiator. Refer to
⇒ Fig. ""Connect the Coolant Hose to the Coupling"" , page 245 .

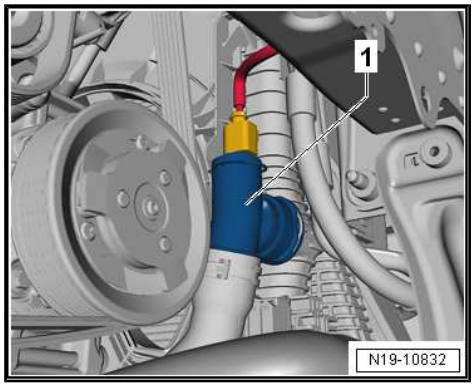

– Fill the -VAS6096- with 10 liters (10.56 quarts) of coolant in the correct mixture ratio, mixture ratio. Refer to ⇒ page 219 .

– Install the Cooling System Tester - Adapter - VAG1274/8- on the coolant expansion tank.

– Secure the Cooling System Charge Kit - VAS6096- on the adapter -VAG1274/8- .

– Place the air outlet hose -1- in a small container -2-.

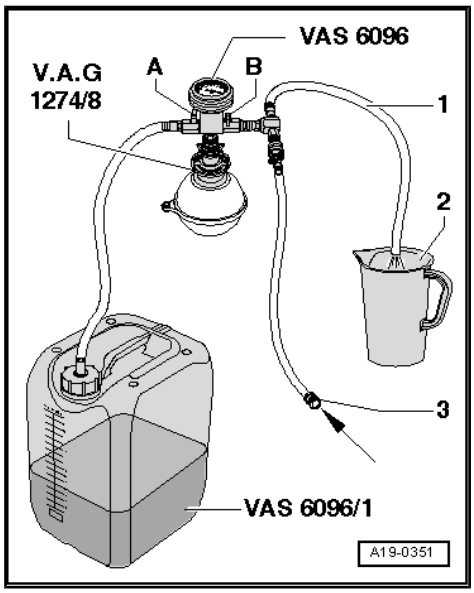

Note

A small amount of coolant which should be collected is drawn off with the discharged air.

– Close valves -A and B- by turning lever at a right angle to direction of flow.

– Connect the hose -3- to compressed air.

• Pressure: 6 to 10 bar (87.02 to 145.03 psi) positive pressure.

– Connect the Vehicle Diagnostic Tester.

– Turn on the ignition and select the following menu items on the Vehicle Diagnostic Tester :

◆ `01 - Engine electronics`

◆ `Guided functions`

◆ `01 - Cooling system filling/bleeding`

Protected by copyright. Copying for private or commercial purposes, in part or in whole, is not permitted unless authorised by Volkswagen AG. Volkswagen AG does not guarantee or accept any liability with respect to the correctness of information in this document. Copyright by Volkswagen AG.

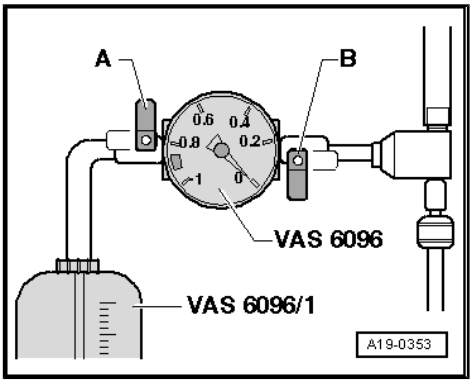

– Open valve -B- by turning level in direction of flow.

• The suction jet pump generates pressure in the coolant system; indicator on display instrument must move into green area.

– Briefly open the valve -A- by turning the lever in the flow direction so that the hose on the Cooling System Charge Kit - VAS6096- coolant expansion tank fills with coolant.

– Close valve -A- again.

– Leave valve -B- open another two minutes.

• More pressure is generated in the coolant system by the suction jet pump; indicator on display instrument must stay in green area.

– Close valve -B-.

– Remove pressurized air hose.

• Needle in the display instrument must remain in the green region, then the sufficient vacuum in the cooling system is obtained for the upcoming filling.

Protected by copyright. Copying for private or commercial purposes, in part or in whole, is not permitted unless authorised by Volkswagen AG. Volkswagen AG does not guarantee or accept any liability with respect to the correctness of information in this

Note

♦ *Repeat the procedure if the needle goes below the green range.*

♦ *Check the cooling system for leaks if the pressure drops.*

– Open the valve -A- slowly.

• Coolant is extracted from the Cooling System Charge Kit - VAS6096- coolant reservoir by pressure in the coolant system and the system is filled.

– Remove the Cooling System Charge Kit - VAS6096- from the coolant expansion tank.

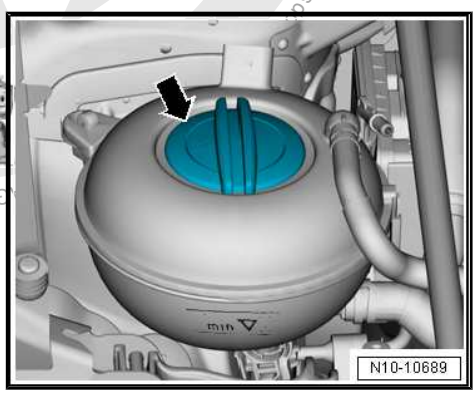

– Fill the coolant to the MAX marking.

– Install the noise insulation. Refer to ⇒ Body Exterior; Rep. Gr. 66 ; Noise Insulation; Overview - Noise Insulation .

– If the vehicle has a parking heater, switch it on for about 30 seconds.

– Set the temperature at “HI”.

– Press the AC button to turn off the A/C compressor.

• The LED in the button must not come on.

– Start the engine and run it at approximately 1500 RPM for a maximum of two minutes.

– With engine running, fill coolant up to overflow hole on coolant expansion tank.

– Close the cap on the coolant expansion tank until it locks into place.

– Let the engine run at idle until both large coolant hoses on the radiator are warm.

– Turn off engine and allow it to cool off.

– Check the coolant level.

- The coolant level must be between the “min” and max markings when the engine is cold.
- Coolant level may be at the MAX marking with engine at operating temperature.

– Add more coolant if necessary.

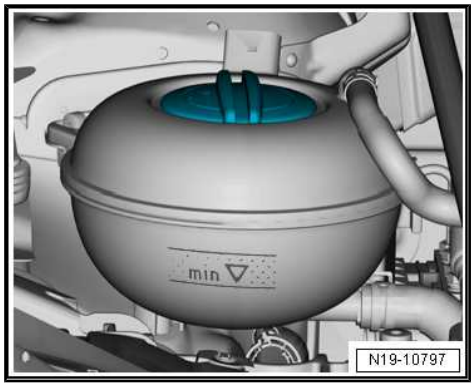

Protected by copyright. Copying for private or commercial purposes, in part or in whole, is not permitted unless authorised by Volkswagen AG. Volkswagen AG does not guarantee or accept any liability with respect to the correctness of information in this document. Copyright by Volkswagen AG.

2 Coolant Pump/Thermostat

⇒ "2.1 Overview - Coolant Pump/Thermostat", page 223

⇒ "2.2 Overview - Electric Coolant Pump", page 226

⇒ "2.3 Overview - Engine Coolant Temperature Sensor", page 228

⇒ "2.4 After-Run Coolant Pump V51 , Removing and Installing", page 228

⇒ "2.5 Coolant Shut-Off Valve N82 , Removing and Installing", page 230

⇒ "2.6 Transmission Coolant Valve N488 , Removing and Installing", page 231

⇒ "2.7 Coolant Pump, Removing and Installing", page 232

⇒ "2.8 Coolant Pump Toothed Belt, Removing and Installing", page 235

⇒ "2.9 Engine Temperature Control Actuator N493 , Removing and Installing", page 237

⇒ "2.10 Engine Coolant Temperature Sensor G62 , Removing and Installing", page 238

⇒ "2.11 Engine Coolant Temperature Sensor on Radiator Outlet G83 , Removing and Installing", page 239

2.1 Overview - Coolant Pump/Thermostat

Protected by copyright. Copying for private or commercial purposes, in part or in whole, is not permitted unless authorised by Volkswagen AG. Volkswagen AG does not guarantee or accept any liability with respect to the correctness of information in this document. Copyright by Volkswagen AG.

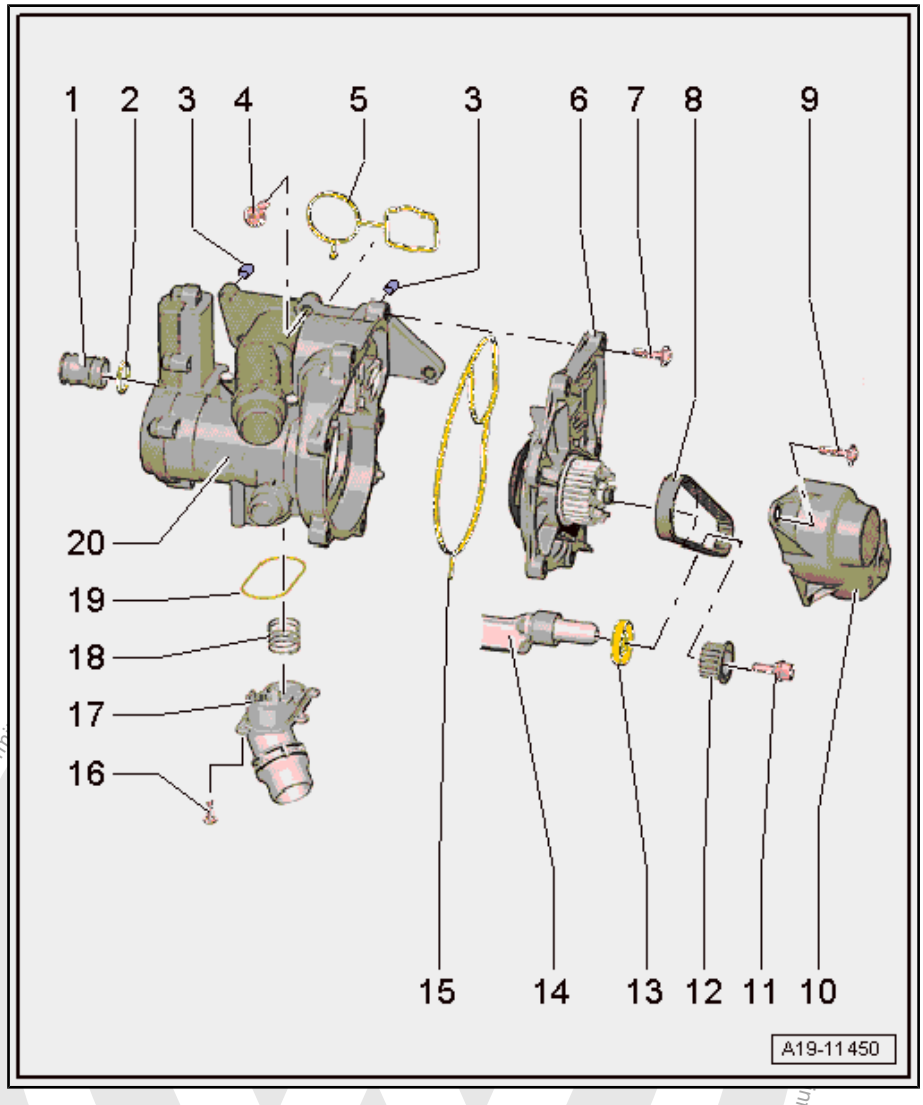

1 - Connection

2 - O-Ring

- ❑ Replace after removing
- ❑ Coat with coolant

3 - Centering Pin

4 - Bolt

- ❑ Tightening specification and sequence. Refer to ⇒ Fig. "" Engine Temperature Control Actuator -N493- - Tightening Specifications and Sequence"" , page 225 .

5 - Seal

- ❑ Replace after removing

6 - Coolant Pump

- ❑ Removing and installing. Refer to ⇒ "2.7 Coolant Pump, Removing and Installing", page 232 .
- ❑ With a new coolant pump, remove the protective cap

7 - Bolt

- ❑ Tightening sequence. Refer to ⇒ Fig. ""Coolant Pump - Tightening Specification and Sequence"" , page 225

8 - Toothed Belt

- ❑ For the coolant pump
- ❑ Removing and installing. Refer to ⇒ "2.8 Coolant Pump Toothed Belt, Removing and Installing", page 235 .

9 - Bolt

- ❑ 9 Nm

10 - Toothed Belt Cover

11 - Bolt

- ❑ 10 Nm + 90°
- ❑ Left thread
- ❑ Replace after removing

12 - Drive Gear for Toothed Belt

- ❑ Pay attention to the installed position.

13 - Balance Shaft Seal Intake Side

- ❑ Replacing. Refer to ⇒ "4.3 Balance Shaft Sealing Ring, Replacing, Intake Side", page 75 .

14 - Balance Shaft

15 - Seal

- ❑ Replace after removing

16 - Bolt

- ❑ 9 Nm

Protected by copyright. Copying for private or commercial purposes, in part or in whole, is not permitted unless authorized by Volkswagen AG. Copyright by Volkswagen AG.

17 - Connecting Piece

18 - Spring

19 - Seal

- ❑ Replace after removing

20 - Engine Temperature Control Actuator - N493-

- ❑ Removing and installing. Refer to
  ⇒ “2.9 Engine Temperature Control Actuator N493 , Removing and Installing”, page 237 .

Engine Temperature Control Actuator - N493- - Tightening Specifications and Sequence

– Tighten the bolts in the sequence -1 through 5-.

Tightening Sequence	Tightening Specification
-1- through -5-	Tighten to 9 Nm.

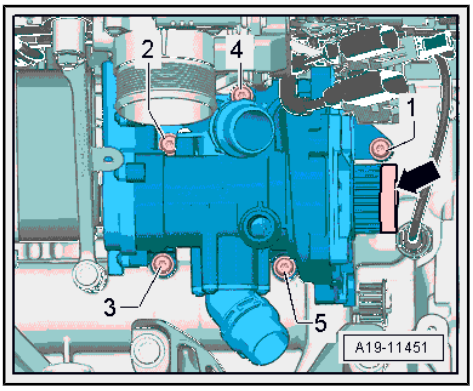

Coolant Pump - Tightening Specification and Sequence

– Tighten the coolant pump bolts in the sequence -1 through 4-.

Tightening Sequence	Tightening Specification
-1 through 4-	Tighten to 9 Nm.

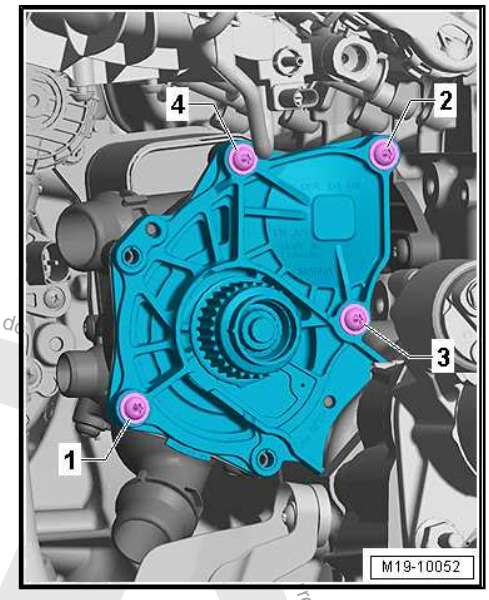

Protected by copyright. Copying for private or commercial purposes, in part or in whole, is not permitted unless authorised by Volkswagen AG. Volkswagen AG do
respect to the correctness of information in this document. Copyright by Volkswagen AG.

2.2 Overview - Electric Coolant Pump

After-Run Coolant Pump - V51- , Coolant Shut-Off Valve - N82-

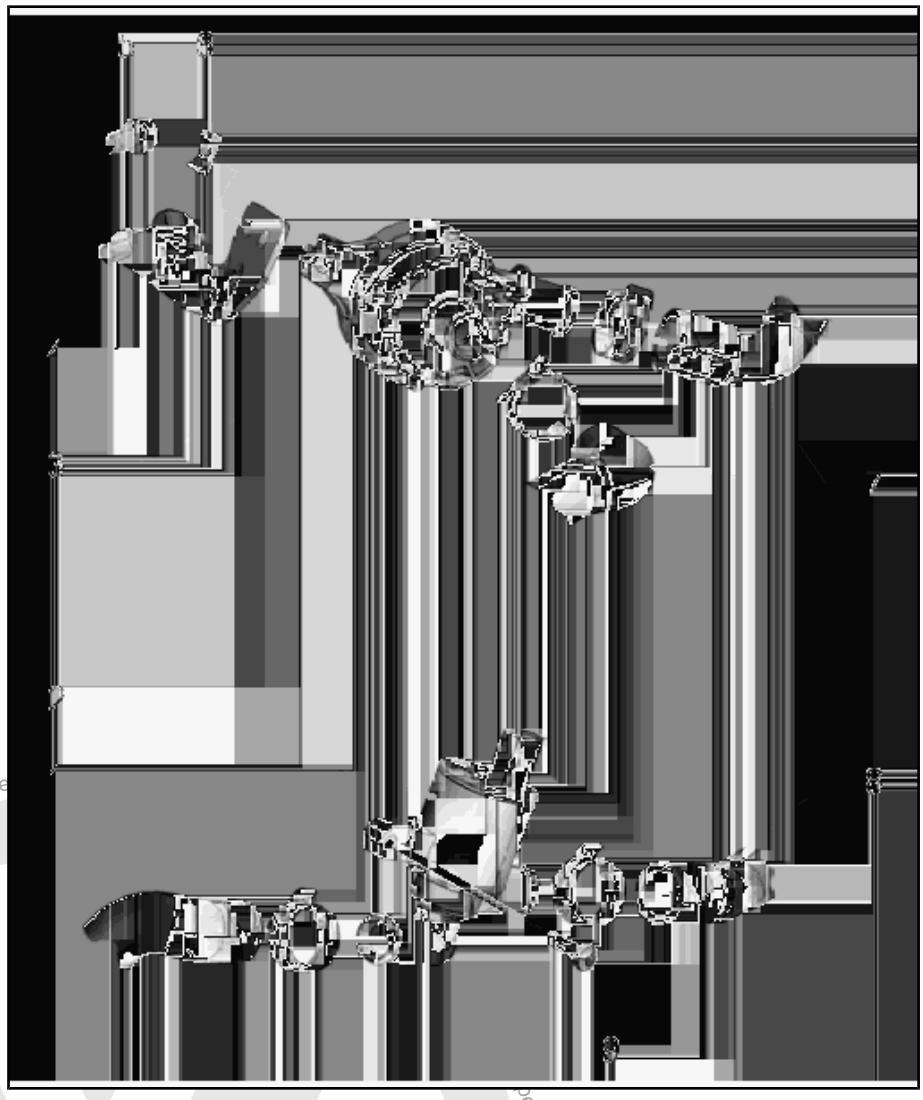

1 - Coolant Hose

2 - Coolant Shut-Off Valve - N82-

- ❑ Removing and installing. Refer to ⇒ "2.5 Coolant Shut-Off Valve N82 , Removing and Installing", page 230 .

3 - After-Run Coolant Pump - V51-

- ❑ With bracket
- ❑ Depending on the version there can be slight differences.
- ❑ Removing and installing. Refer to ⇒ "2.4 After-Run Coolant Pump V51 , Removing and Installing", page 228 .

4 - Bracket

- ❑ For After-Run Coolant Pump - V51-

5 - Bolt

- ❑ 20 Nm

6 - Clamp

7 - Coolant Hoses

8 - Coolant Hose

9 - Bolt

- ❑ 9 Nm

Transmission Coolant Valve - N488- , Vehicles with DSG® Transmission

Protected by copyright. Copyright for private or commercial purposes, in whole or in whole, is not permitted unless authorised by Volkswagen AG. Copyright by Volkswagen AG. No liability is accepted with respect to the correctness of information in this document.

1 - Bolt

- ❑ 9 Nm

2 - Coolant Hose

3 - Nut

- ❑ 9 Nm

4 - Coolant Hose

5 - Transmission Coolant Valve - N488-

- ❑ Removing and installing. Refer to ⇒ "2.5 Coolant Shut-Off Valve N82 , Removing and Installing", page 230 .

6 - Bracket

- ❑ For the Transmission Coolant Valve - N488-

Protected by copyright. Copying for private or commercial purposes, in part or in whole, is not permitted unless authorised by Volkswagen AG. Copyright by Volkswagen AG.

2.3 Overview - Engine Coolant Temperature Sensor

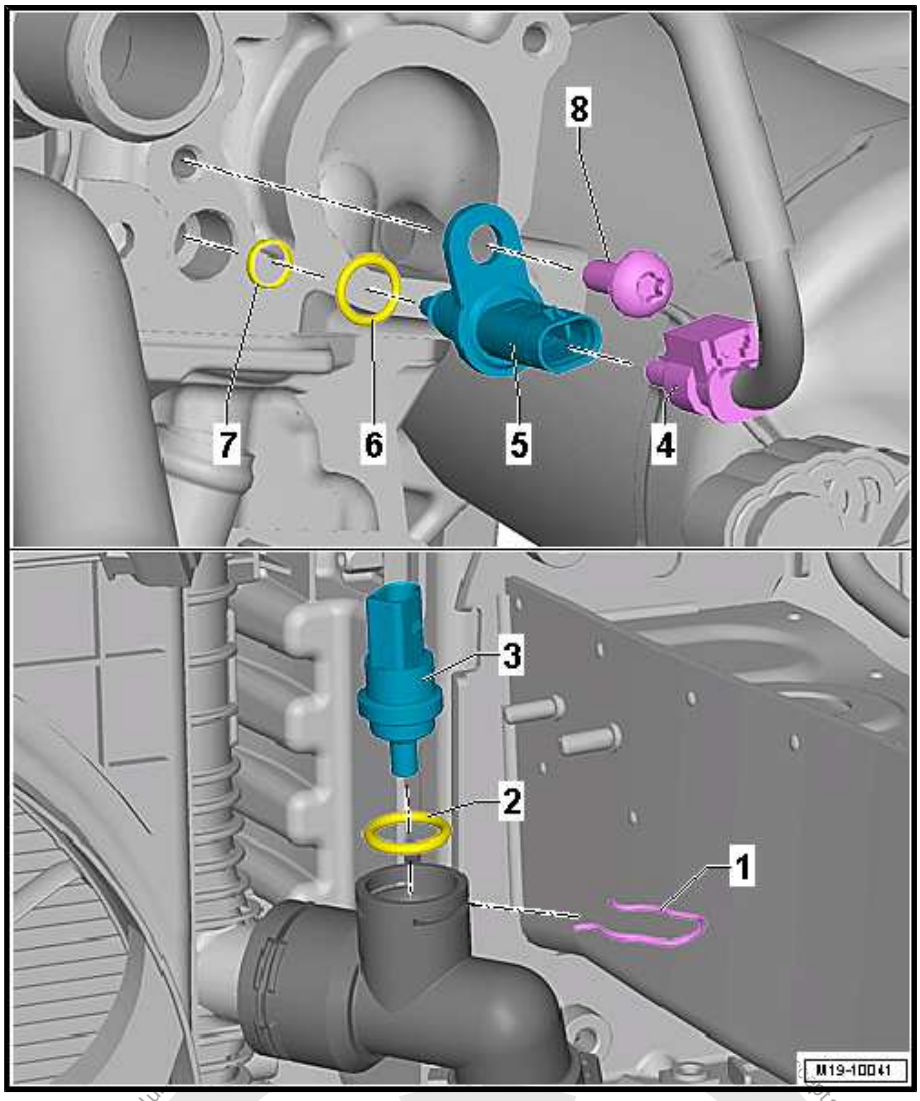

1 - Clamp

- ❑ Make sure it is secure

2 - O-Ring

- ❑ Replace after removing

3 - Engine Coolant Temperature Sensor on Radiator Outlet - G83-

- ❑ Removing and installing. Refer to ⇒ "2.11 Engine Coolant Temperature Sensor on Radiator Outlet G83 , Removing and Installing", page 239 .

4 - Connector

5 - Engine Coolant Temperature Sensor - G62-

- ❑ On transmission side of the cylinder head
- ❑ Removing and installing. Refer to ⇒ "2.10 Engine Coolant Temperature Sensor G62 , Removing and Installing", page 238 .

6 - O-Ring

- ❑ Replace after removing
- ❑ Coat with coolant

7 - O-Ring

- ❑ Replace after removing
- ❑ Coat with coolant

8 - Bolt

- ❑ 4 Nm + 45° turn
- ❑ Replace after removing

2.4 After-Run Coolant Pump - V51- , Removing and Installing

Special tools and workshop equipment required

- ♦ Hose Clamps - Up To 25mm - 3094-
- ♦ Hose Clip Pliers - VAS6340-
- ♦ Hose Clip Pliers - VAS6362-

Protected by copyright. Copyright by Volkswagen AG. Copying for private or commercial purposes, in part or in whole, is not permitted unless authorised by Volkswagen AG. Volkswagen AG does not guarantee or assume any liability with respect to the correctness of information in this document.

Removing

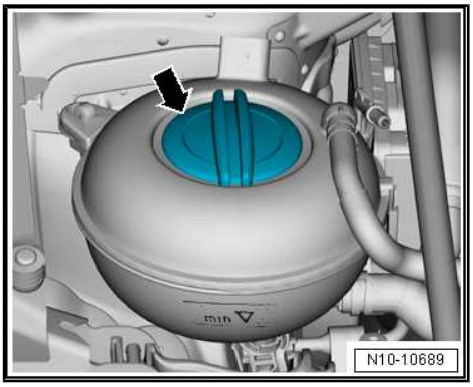

Note

During installation, all heat insulation sleeves must be installed at the same location.

CAUTION

The coolant system is under pressure when the engine is warm. Risk of scalding due to hot steam and hot coolant.

Possibility of burning or scalding the skin and other parts of the body.

- **Wear safety gloves.**
- **Wear protective eyewear.**
- **Reduce the pressure: cover the coolant reservoir cap with a cloth and carefully open.**

- Remove the cap -arrow- from the coolant expansion tank.
- Remove the noise insulation. Refer to ⇒ Body Exterior; Rep. Gr. 66 ; Noise Insulation; Overview - Noise Insulation .
- Free up the wiring harness -1 and 2- from the air guide pipe.
- Loosen the screw-type clamp -3-.
- Remove the bolts -arrows-.

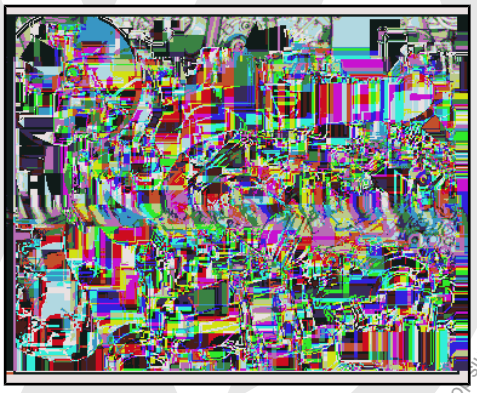

- Loosen the hose clamp -arrow- and remove the charge air hose -A- with the air guide pipe downward.

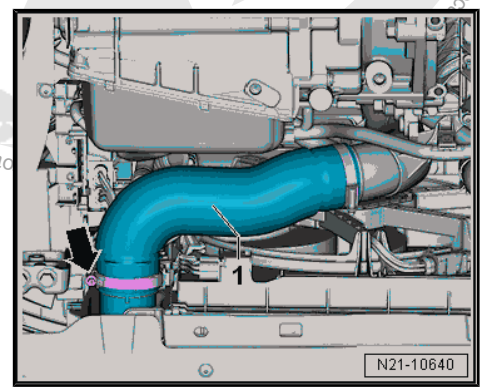

Protected by copyright. Copying for private or commercial purposes, in part or in whole, is not permitted unless authorised by Volkswagen AG. Volkswagen AG does not guarantee or accept any liability with respect to the correctness of information in this document.

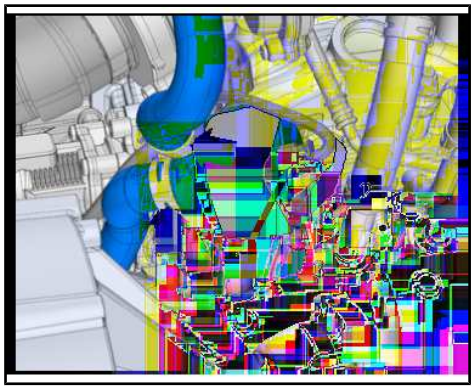

– Open the heat protection sleeve -3-.
– Disconnect the connector -1-.
– Clamp the coolant hoses on the After-Run Coolant Pump - V51- with the Hose Clamps - Up To 25mm - 3094- .

Note

Place a cleaning cloth underneath, to catch coolant leaking out.

– Loosen the clamps -arrows- and remove the coolant hoses.
– Remove the bolt -2- and the After-Run Coolant Pump - V51- .

Installing

Install in reverse order of removal. Note the following:

Note

Secure hose connections with standard production clamps. Refer to the Parts Catalog.

– Check the coolant level. Refer to ⇒ page 222 .

Tightening Specifications

- Refer to ⇒ “2.2 Overview - Electric Coolant Pump”, page 226 .
- Refer to ⇒ “3.1 Overview - Air Filter Housing”, page 293 .
- Refer to ⇒ Body Exterior; Rep. Gr. 66 ; Noise Insulation; Overview - Noise Insulation .

2.5 Coolant Shut-Off Valve - N82- , Removing and Installing

Special tools and workshop equipment required

- Hose Clamps - Up To 25mm - 3094-
- Hose Clip Pliers - VAS6362-

Removing

– Remove the air filter housing. Refer to ⇒ “3.2 Air Filter Housing, Removing and Installing”, page 294
– Loosen the hose clamp -2-.
– Remove bolt -1-, push the left air guide pipe left.

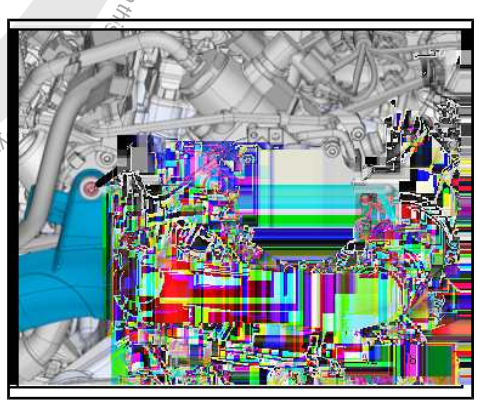

Protected by copyright. Copying for private or commercial purposes, in part or in whole, is not permitted unless authorised by Volkswagen AG. Volkswagen AG does not guarantee or accept any liability with respect to the correctness of information in this document. Copyright by Volkswagen AG.

– Disconnect the connector -2-.

– Clamp the coolant hoses on Coolant Shut-Off Valve - N82- with the Hose Clamps - Up To 25mm - 3094- .

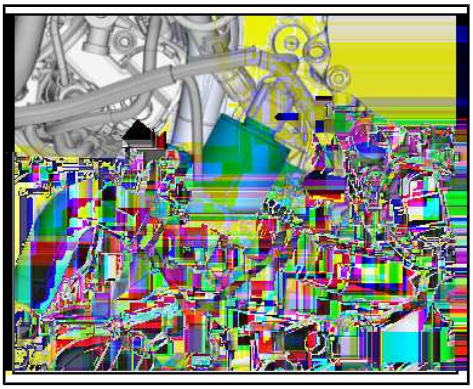

Note

Place a cleaning cloth underneath, to catch coolant leaking out.

– Loosen the hose clamps -1- and remove the coolant hoses.

– Remove the bolts -arrows-, and remove the Coolant Shut-Off Valve - N82- .

Installing

Install in reverse order of removal. Note the following:

Note

Secure hose connections with standard production clamps. Refer to the Parts Catalog.

– Check the coolant level. Refer to ⇒ page 222 .

Tightening Specifications

♦ Refer to ⇒ “2.2 Overview - Electric Coolant Pump”, page 226 .

♦ Refer to ⇒ “3.1 Overview - Air Filter Housing”, page 293 .

2.6 Transmission Coolant Valve - N488- , Removing and Installing

Special tools and workshop equipment required

♦ Hose Clamps - Up To 25mm - 3094-

♦ Hose Clip Pliers - VAS6362-

Vehicles with a DSG® Transmission

Removing

– Remove the noise insulation. Refer to ⇒ Body Exterior; Rep. Gr. 66 ; Noise Insulation; Overview - Noise Insulation .

– Remove the air filter housing. Refer to ⇒ “3.2 Air Filter Housing, Removing and Installing”, page 294 .

– Free up the wiring harness -1 and 2- from the air guide pipe.

– Loosen the screw-type clamp -3-.

– Remove the bolts -arrows-.

Protected by copyright. Copyright by Volkswagen AG. Volkswagen AG does not guarantee or accept any liability with respect to the correctness of information in this document. Copyright by Volkswagen AG. Volkswagen AG. Volkswagen AG does not guarantee or accept any liability with respect to the correctness of information in this document. Copyright by Volkswagen AG. Volkswagen AG. Volkswagen AG does not guarantee or accept any liability with respect to the correctness of information in this document. Copyright by Volkswagen AG. Volkswagen AG. Volkswagen AG does not guarantee or accept any liability with respect to the correctness of information in this document. Copyright by Volkswagen AG.

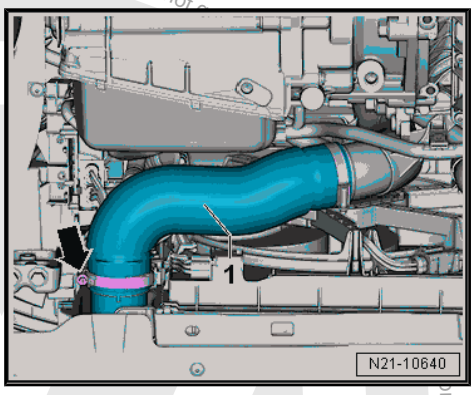

– Loosen the hose clamp -arrow- and remove the charge air hose -1- with the air guide pipe downward.
– Disconnect the connector -1-.
– Clamp the coolant hoses on Transmission Coolant Valve - N488- with Hose Clamps - Up To 25mm - 3094- .

Note

Place a cleaning cloth underneath, to catch coolant leaking out.

– Loosen the clamps -2- and remove the coolant hoses.

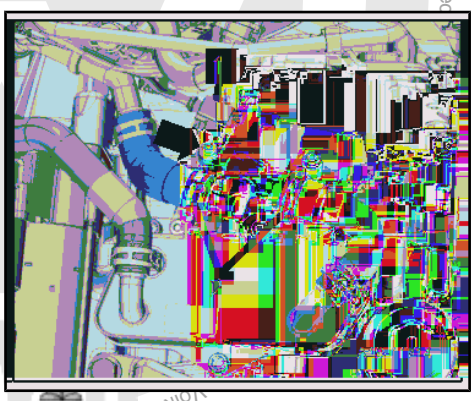

– Remove the nuts -arrows- and then remove the Transmission Coolant Valve - N488- .

Installing

Install in reverse order of removal. Note the following:

Note

Secure hose connections with standard production clamps. Refer to the Parts Catalog.

– Check the coolant level. Refer to ⇒ page 222 .

Tightening Specifications

- Refer to ⇒ “2.2 Overview - Electric Coolant Pump”, page 226 .
- Refer to ⇒ “3.1 Overview - Air Filter Housing”, page 293 .
- Refer to ⇒ Body Exterior; Rep. Gr. 66 ; Noise Insulation; Overview - Noise Insulation .

2.7 Coolant Pump, Removing and Installing

Removing

– Drain the coolant. Refer to ⇒ “1.3 Coolant, Draining and Filling”, page 217 .
– Remove the air filter housing. Refer to ⇒ “3.2 Air Filter Housing, Removing and Installing”, page 294 .
– Free up the wiring harness -1 and 2- from the air guide pipe.
– Loosen the screw-type clamp -3-.
– Remove the bolts -arrows-.

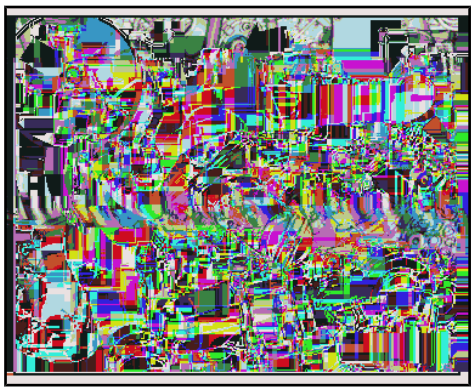

Protected by copyright. Copying for private or commercial purposes, in part or in whole, is not permitted unless authorised by Volkswagen AG. Volkswagen AG does not

– Loosen the hose clamp -arrow- and remove the charge air hose -1- with the air guide pipe downward.

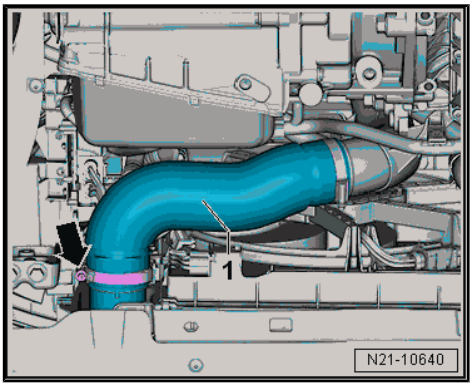

– Remove the bolt -arrow- on the left and right.
– Unclip and remove the lower section -1- of the air duct.
– Remove the throttle valve control module. Refer to ⇒ “4.5 Throttle Valve Control Module GX3 , Removing and Installing”, page 309 .

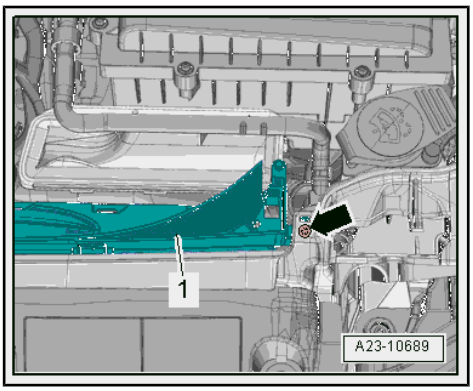

– Lift the clamp -1-, remove the upper coolant supports and set them aside.

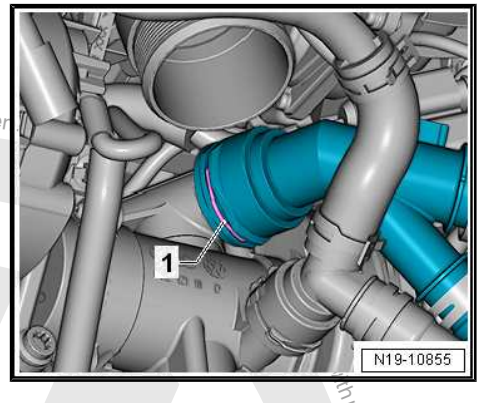

– Disconnect the connectors -2, 3 and 4-. Remove the bolts -1- and move the bracket to the side.

Protected by copyright. Copying for private or commercial purposes, in part or in whole, is not permitted unless authorised by Volkswagen AG. Volkswagen AG. Copyright by Volkswagen AG.

– Disconnect the connector -1- from the Oil Pressure Switch -2-.

– Remove the bolts -arrows- and remove the toothed belt cover.

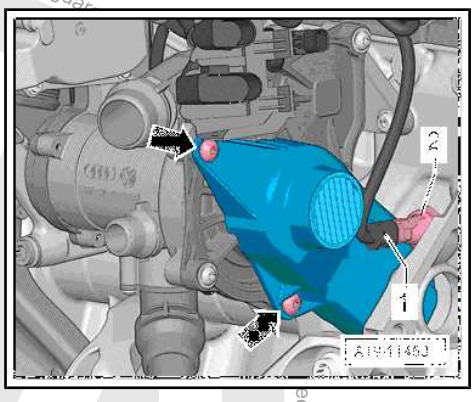

– Loosen the bolts -1 to 4- and remove the toothed belt from the coolant pump.

– Remove the bolts -1 through 4-, and remove the coolant pump from the Engine Temperature Control Actuator - N493- .

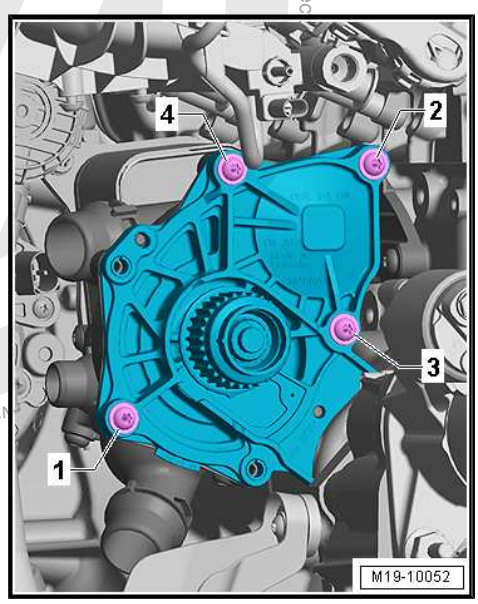

Installing

Install in reverse order of removal. Note the following:

– Install the coolant pump and toothed belt.

– Pay attention to the seating of the centering piece -arrows- and seal -3-.

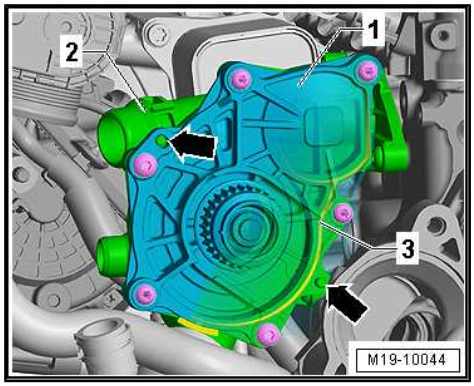

– If a new coolant pump was installed, remove the protective cap -arrow-.

– Fill with coolant. Refer to ⇒ page 218 .

Tightening Specifications

♦ Refer to ⇒ “2.1 Overview - Coolant Pump/Thermostat”, page 223

♦ Refer to ⇒ “3.1 Overview - Air Filter Housing”, page 293

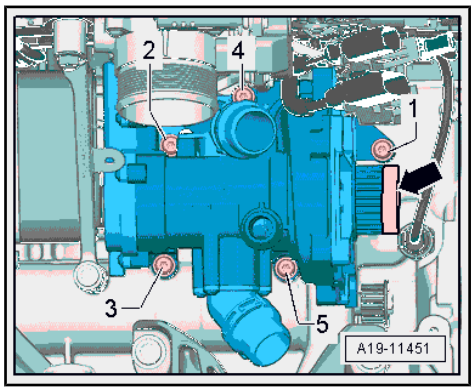

Protected by copyright. Copying for private or commercial purposes, in part or in whole, is not permitted unless authorised by Volkswagen AG. Volkswagen AG does not guarantee

2.8 Coolant Pump Toothed Belt, Removing and Installing

Special tools and workshop equipment required

- Torque Wrench 1331 Insert - Ring Wrench - 12mm - T10360-
- Torque Wrench 1410 - VAG1410-

Removing

– Drain the coolant. Refer to ⇒ “1.3 Coolant, Draining and Filling”, page 217 .

– Remove the air filter housing. Refer to ⇒ “3.2 Air Filter Housing, Removing and Installing”, page 294 .

– Free up the wiring harness -1 and 2- from the air guide pipe.

– Loosen the screw-type clamp -3-.

– Remove the bolts -arrows-.

– Loosen the hose clamp -arrow- and remove the charge air hose -1- with the air guide pipe downward.

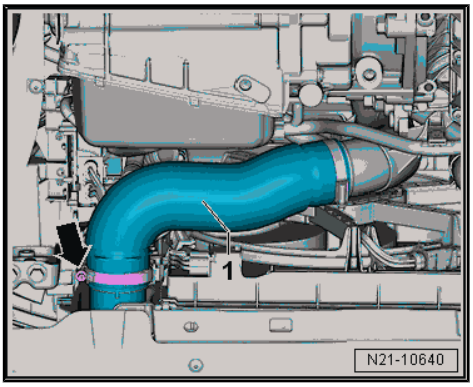

– Remove the bolt -arrow- on the left and right.

– Unclip and remove the lower section -1- of the air duct.

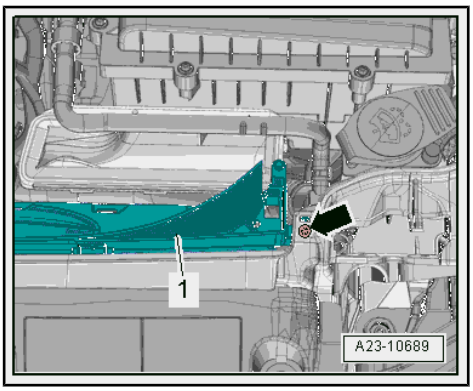

Protected by copyright. Copying for private or commercial purposes, in part or in whole, is not permitted unless authorised by Volkswagen AG. Volkswagen AG does not guarantee or accept any liability with respect to the correct

– Lift the clamp -1-, remove the upper coolant supports and set them aside.

– Disconnect the connector -1- from the Oil Pressure Switch -2-.

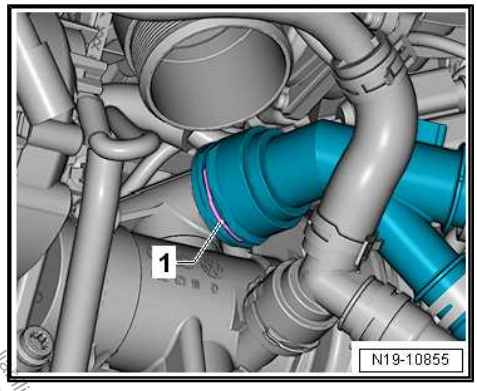

– Remove the bolts -arrows- and remove the toothed belt cover.

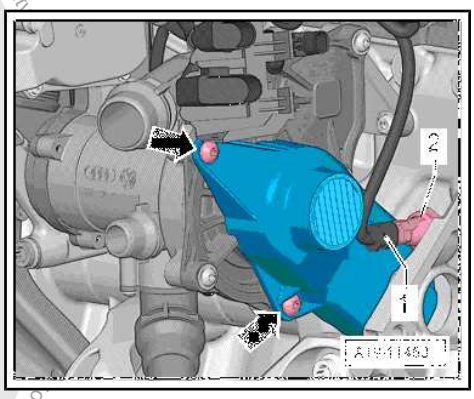

Note

The drive gear bolt has a left thread.

– Counterhold the vibration damper and remove the bolt from the coolant pump the drive wheel -1- by loosening three turns. Use Torque Wrench 1410 - VAG1410- and Torque Wrench 1331 Insert - Ring Wrench - 12mm - T10360- .

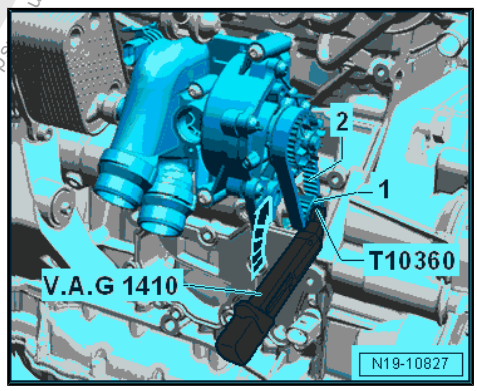

Note

If on vehicles with a manual transmission a starter bolt hinders attaching the tool, remove the bolt approximately 15 mm.

– Remove the toothed belt -2-.

Installing

Install in reverse order of removal. Note the following:

– Replace the bolt for the drive wheel.

– Drive gear installation position: the collar on the drive gear faces the transmission.

– Position the toothed belt and tighten the bolts.

– Fill with coolant. Refer to ⇒ page 218 .

Tightening Specifications

♦ Refer to ⇒ “2.1 Overview - Coolant Pump/Thermostat”, page 223

♦ Refer to ⇒ “3.1 Overview - Air Filter Housing”, page 293

Copyright. Copying for private or commercial purposes, in part or in whole, is not permitted unless authorised by Volkswagen AG. Volkswagen AG does not guarantee or accept any liability with respect to the correctness and completeness of this document.

2.9 Engine Temperature Control Actuator - N493- , Removing and Installing

Removing

> **Caution**
>
> *This procedure contains mandatory replaceable parts. Refer to component overview prior to starting procedure.*

Mandatory Replacement Parts

- Seal - Engine Temperature Control Actuator
- O-rings - Engine Temperature Control Actuator

– Remove the coolant pump. Refer to ⇒ “2.7 Coolant Pump, Removing and Installing”, page 232 .

– Remove the Throttle Valve Control Module - GX3- . Refer to ⇒ “4.5 Throttle Valve Control Module GX3 , Removing and Installing”, page 309 .

– Remove the coolant pipe from the intake manifold -arrows-.

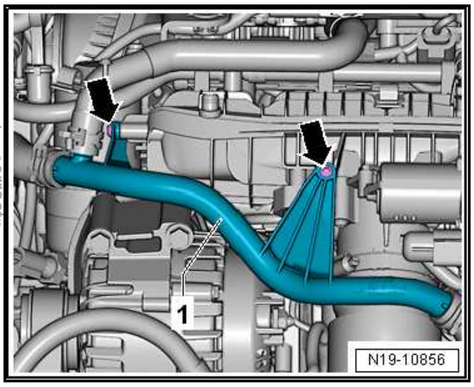

– Lift the clamp -1-, and remove the coolant hoses.

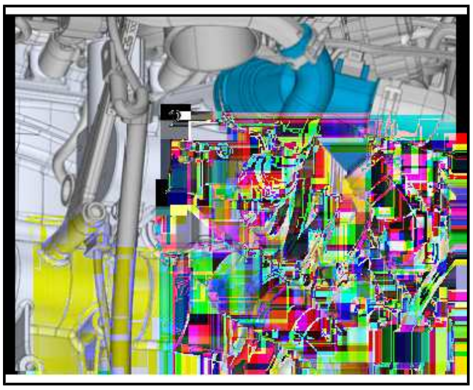

– Remove the connector -1- from the Engine Temperature Control Actuator - N493- .

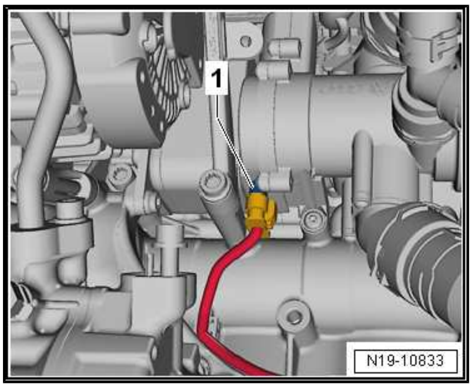

Protected by copyright. Copying for private or commercial purposes, in part or in whole, is not permitted unless authorised by Volkswagen AG. Volkswagen AG does not guarantee or accept any liability with respect to the correctness of information in this document. Copyright by Volkswagen AG.

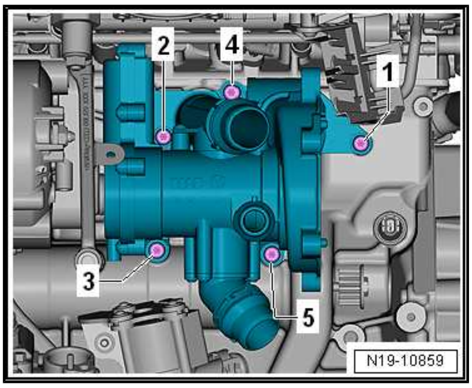

– Remove the bolts -1 to 5-.
– Remove the Engine Temperature Control Actuator - N493- from the centering pin and disconnect it from the engine oil cooler.

Installing

Install in reverse order of removal. Note the following:

Note

Replace the seals and O-rings.

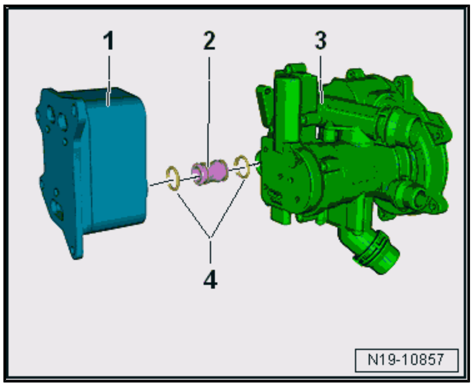

– Coat the new O-rings -4- with coolant.
– Make sure both centering pins are installed in the cylinder block.
– Install the connection piece -2- into the engine oil cooler -1-.
– Push the Engine Temperature Control Actuator - N493- -3- into the connection piece and onto the centering pins in the cylinder block.

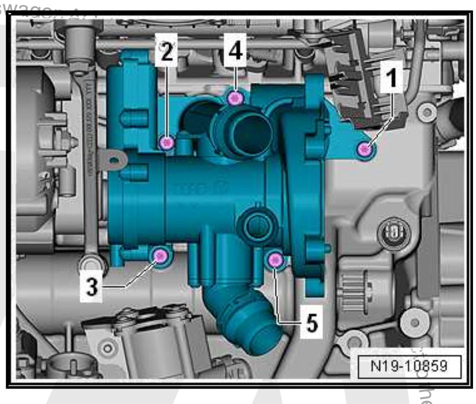

– Tighten the bolts for the Engine Temperature Control Actuator - N493- . Refer to ⇒ Fig. ““ Engine Temperature Control Actuator -N493- - Tightening Specifications and Sequence”“ , page 225 .
– Install the coolant pump. Refer to ⇒ “2.7 Coolant Pump, Removing and Installing”, page 232 .
– Fill with coolant. Refer to ⇒ page 218 .

Tightening Specifications

♦ Refer to ⇒ “2.1 Overview - Coolant Pump/Thermostat”, page 223 .
♦ Refer to ⇒ “4.1 Overview - Intake Manifold”, page 296 .

2.10 Engine Coolant Temperature Sensor - G62- , Removing and Installing

Removing

• Engine is cold.
– Quickly open the coolant expansion tank cap -arrow- and release any remaining pressure in the cooling system and then close it again until it locks.
– Remove the air filter housing. Refer to ⇒ “3.2 Air Filter Housing, Removing and Installing”, page 294 .

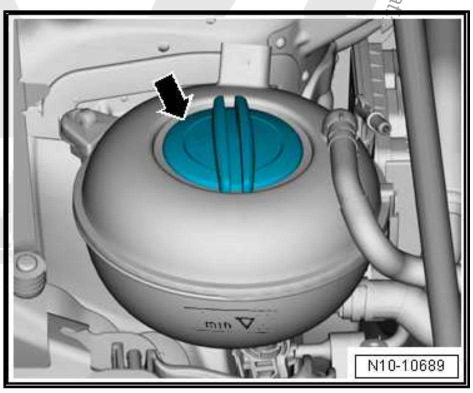

– Loosen the hose clamp -2-.

– Remove bolt -1-, push the left air guide pipe left.

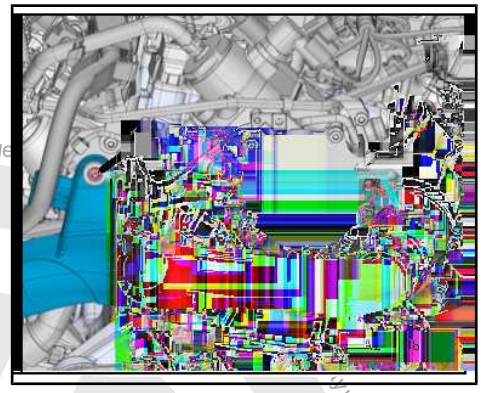

– Disconnect the connector -1-.

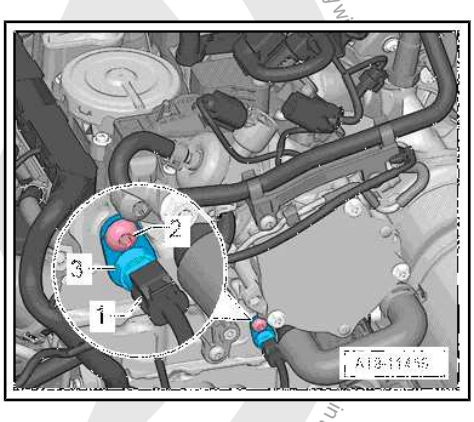

Note

- *Place a cleaning cloth underneath, to catch coolant leaking out.*
- *To prevent coolant loss, immediately insert the new Engine Coolant Temperature Sensor - G62- in the connection.*

– Remove the bolts -2-, and remove the Engine Coolant Temperature Sensor - G62- -3-.

Installing

Install in reverse order of removal. Note the following:

Note

Replace the O-rings.

– Check the coolant level. Refer to ⇒ page 218 .

Tightening Specifications

- Refer to ⇒ “2.3 Overview - Engine Coolant Temperature Sensor”, page 228 .
- Refer to ⇒ “3.1 Overview - Air Filter Housing”, page 293 .

2.11 Engine Coolant Temperature Sensor on Radiator Outlet - G83- , Removing and Installing

Removing

- The engine is cold.

Protected by copyright. Copying for private or commercial purposes, in part or in whole, is not permitted unless authorised by Volkswagen AG. Volkswagen AG. Copyright by Volkswagen AG.

– Quickly open the coolant expansion tank cap -arrow- and release any remaining pressure in the cooling system and then close it again until it locks.

– Remove the noise insulation. Refer to ⇒ Body Exterior; Rep. Gr. 66 ; Noise Insulation; Overview - Noise Insulation .

– Disconnect the connector -1-.

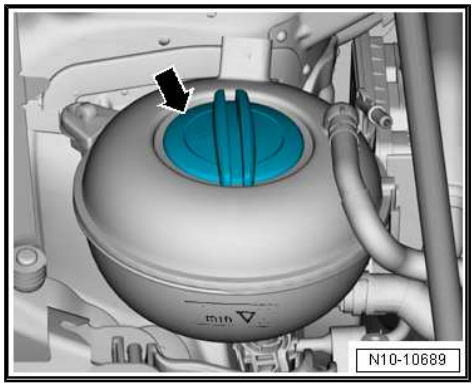

Note

- *Place a cleaning cloth underneath, to catch coolant leaking out.*
- *Insert the new Engine Coolant Temperature Sensor on Radiator Outlet - G83- immediately in the connection to prevent coolant loss.*

– Remove clamp -2- and Engine Coolant Temperature Sensor on Radiator Outlet - G83-.

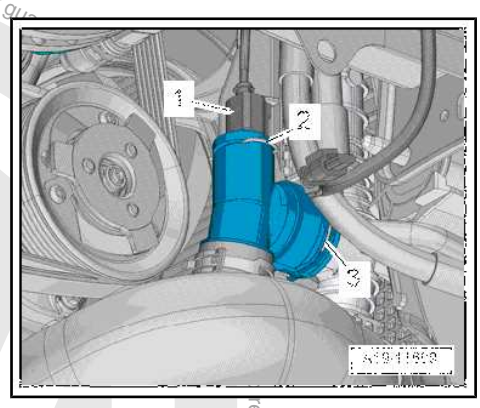

Installing

Install in reverse order of removal. Note the following:

Note

Replace the O-rings.

– Check the coolant level. Refer to ⇒ page 218 .

Tightening Specifications

- Refer to ⇒ Body Exterior; Rep. Gr. 66 ; Noise Insulation; Overview - Noise Insulation .

Protected by copyright. Copying for private or commercial purposes, in part or in whole, is not permitted unless authorised by Volkswagen AG. Volkswagen AG does not guarantee the correctness of information in this document. Copyright by Volkswagen AG.

3 Coolant Pipes

⇒ “3.1 Overview - Coolant Pipes”, page 241 .

⇒ “3.2 Front Coolant Pipes, Removing and Installing”, page 241 .

⇒ “3.3 Upper Coolant Pipes, Removing and Installing”, page 242 .

3.1 Overview - Coolant Pipes

1 - Front Coolant Pipe

- ❑ Removing and installing. Refer to ⇒ “3.2 Front Coolant Pipes, Removing and Installing”, page 241 .

2 - Bolts

- ❑ 6 Nm

3 - Upper Coolant Pipe

- ❑ Removing and installing. Refer to ⇒ “3.3 Upper Coolant Pipes, Removing and Installing”, page 242 .

4 - Bolts

- ❑ 9 Nm

5 - Bolt

- ❑ 9 Nm

6 - Coolant Pipe

7 - Bolts

- ❑ 9 Nm

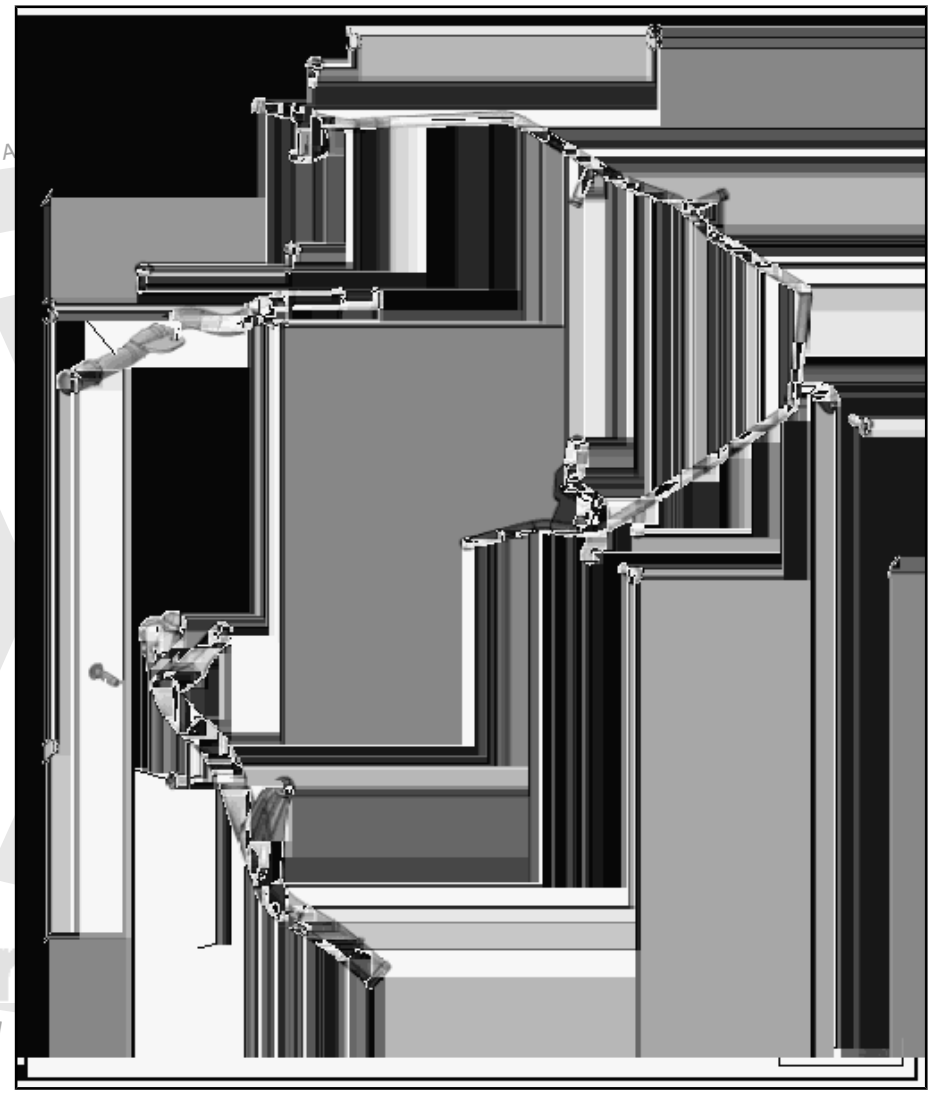

Protected by copyright. Copying for private or commercial purposes, in part or in whole, is not permitted unless authorised by Volkswagen A

3.2 Front Coolant Pipes, Removing and Installing

Special tools and workshop equipment required

- ♦ Hose Clamps - Up To 25mm - 3094-
- ♦ Hose Clip Pliers - VAS6362-

Removing

– Remove the bolts -1 and 3-.

– Open the retainer in direction of -arrow- and remove the cover -2-.

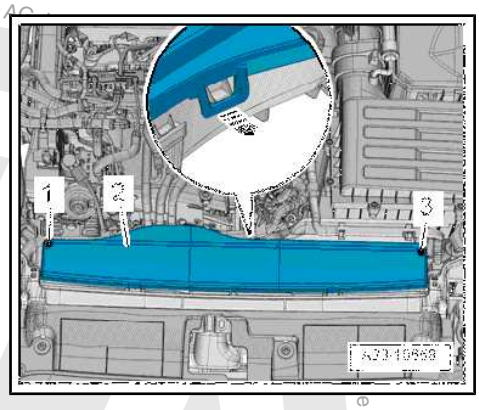

– Free up the coolant hose -2-.

– Open the retaining tabs in direction of -arrows-, remove the upper air duct -1-.

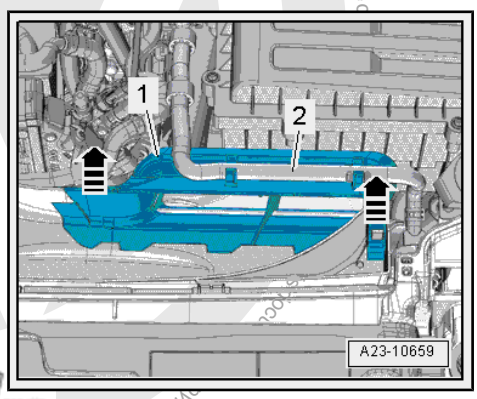

– Remove the left and right bolts -arrow-.

– Unclip the air guide lower section -1- and remove.

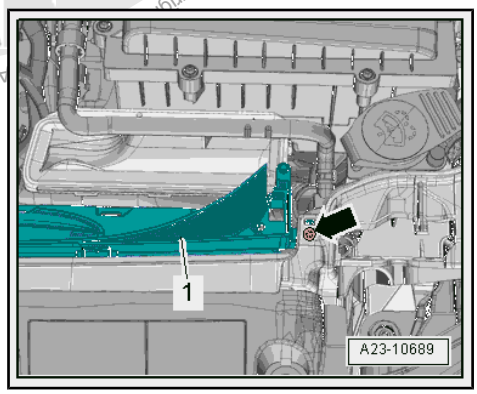

Note

Place a cleaning cloth underneath, to catch coolant leaking out.

– Disconnect the coolant hoses -1 and 2- with Hose Clamps - Up To 25mm - 3094- .

– Loosen the clamps and remove the coolant hoses.

– Remove the bolts -arrows- and the front coolant pipe.

Installing

Install in reverse order of removal. Note the following:

Note

Secure hose connections with standard production clamps. Refer to the Parts Catalog.

– Check the coolant level. Refer to ⇒ page 222 .

Tightening Specifications

♦ Refer to ⇒ “3.1 Overview - Coolant Pipes”, page 241 .

3.3 Upper Coolant Pipes, Removing and Installing

Special tools and workshop equipment required

♦ Hose Clamps - Up To 25mm - 3094-

Protected by copyright. Copying for private or commercial purposes, in part or in whole, is not permitted unless authorised by Volkswagen AG. Volkswagen AG

Protected by copyright. Copying for private or commercial purposes, in part or in whole, is not permitted unless authorised by Volkswagen AG. Volkswagen AG does not guarantee or accept any liability with respect to the correctness of information in this document. Copyright by Volkswagen AG.

♦ Hose Clip Pliers - VAS6362-

Removing

– Remove the ignition coils with power output stages cylinder “3”. Refer to
⇒ “1.3 Ignition Coils with Power Output Stages, Removing and Installing”, page 357 .

– Release retainers in direction of -arrows- and remove wiring duct -1- from bracket.

– Clamp off the coolant hoses -arrows- with the Hose Clamps - Up To 25mm - 3094- .

– Loosen the clamps and remove the coolant hoses.

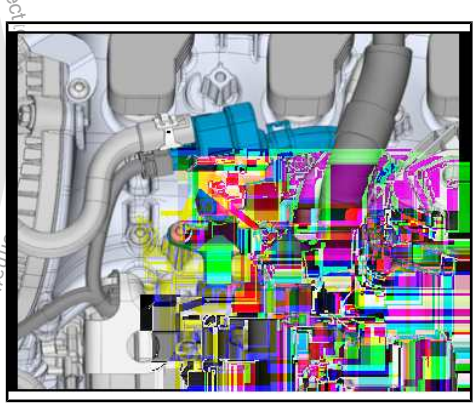

– Remove the bolt -1- and remove the upper coolant pipe.

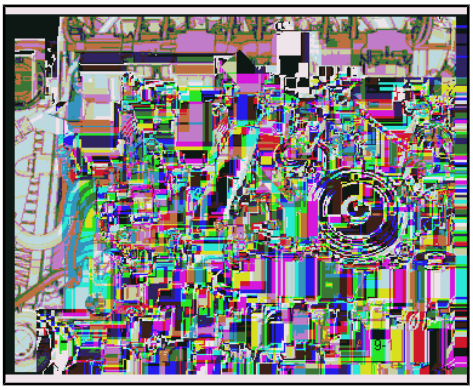

Installing

Install in reverse order of removal. Note the following:

Note

Secure hose connections with standard production clamps. Refer to the Parts Catalog.

– Check the coolant level. Refer to ⇒ page 222 .

Tightening Specifications

♦ Refer to ⇒ “3.1 Overview - Coolant Pipes”, page 241 .

4 Radiator/Coolant Fan

⇒ “4.1 Overview - Radiator/Coolant Fan”, page 244 .
⇒ “4.3 Overview - Fan Shroud and Radiator Fan”, page 247 .
⇒ “4.4 Radiator, Removing and Installing”, page 247 .
⇒ “4.5 Fan Shroud, Removing and Installing”, page 249 .
⇒ “4.6 Coolant Fan, Removing and Installing”, page 250 .
⇒ “4.7 Auxiliary Cooler, Removing and Installing”, page 251 .

4.1 Overview - Radiator/Coolant Fan

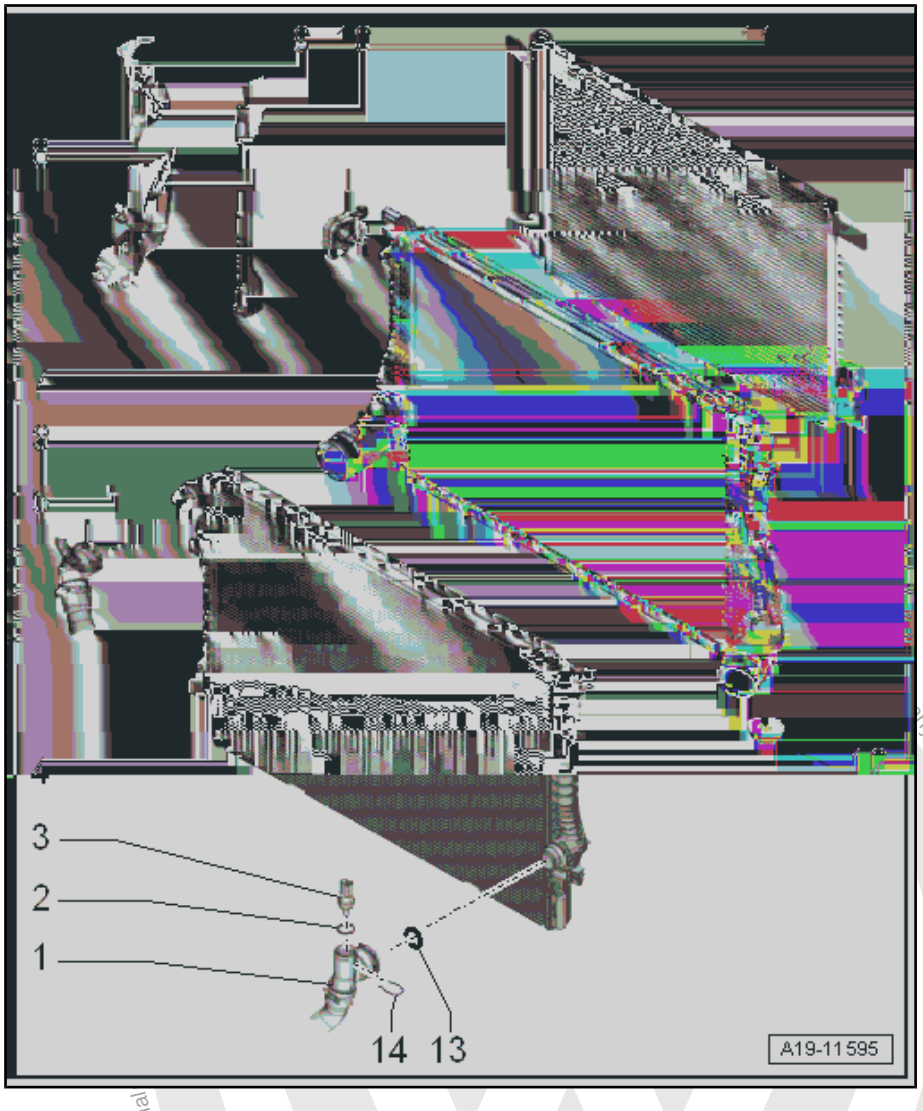

1 - Coolant Hose

- ❑ Lift the retaining clamp to remove
- ❑ Connecting. Refer to ⇒ Fig. ““Connect the Coolant Hose to the Coupling”“ , page 245

2 - O-Ring

- ❑ Replace after removing
- ❑ Coat with coolant

3 - Engine Coolant Temperature Sensor on Radiator Outlet - G83-

- ❑ Removing and installing. Refer to ⇒ “2.11 Engine Coolant Temperature Sensor on Radiator Outlet G83 , Removing and Installing”, page 239 .

4 - Radiator

- ❑ Removing and installing. Refer to ⇒ “4.4 Radiator, Removing and Installing”, page 247 .
- ❑ Change the coolant after replacing

5 - Coolant Hose

- ❑ Lift the retaining clamp to remove
- ❑ Connecting. Refer to ⇒ Fig. ““Connect the Coolant Hose to the Coupling”“ , page 245

6 - O-Ring

- ❑ Replace after removing
- ❑ Coat with coolant

7 - Charge Air Cooler

- ❑ Removing and installing. Refer to ⇒ “2.3 Charge Air Cooler, Removing and Installing”, page 265 .

Protected by copyright. Copyright for private or commercial use only. Copyright by Volkswagen AG. No liability with respect to the correctness of information in this document.

Protected by copyright. Copying for private or commercial purposes, in part or in whole, is not permitted unless authorised by Volkswagen AG. Volkswagen AG does not guarantee or accept any liability with respect to the correctness of information

8 - Air Guide

9 - Air Guide

10 - Radiator Mount

11 - Condenser

- ❑ Removing and installing. Refer to ⇒ Heating, Ventilation and Air Conditioning; Rep. Gr. 87 ; Refrigerant Circuit; Condenser, Removing and Installing .

12 - Rubber Bushing

- ❑ For the charge air cooler

13 - O-Ring

- ❑ Replace after removing
- ❑ Coat with coolant

14 - Clamp

- ❑ For Engine Coolant Temperature Sensor on Radiator Outlet - G83-

Connect the Coolant Hose to the Coupling

– Remove the old O-ring -2- in the coolant hose -3-.

– Coat the new O-ring with coolant and insert it in the coolant hose.

– Press the coolant hose on to the coolant pipe -1- until you hear it engage.

– Press the coolant hose on again and pull to make sure the connection is engaged correctly.

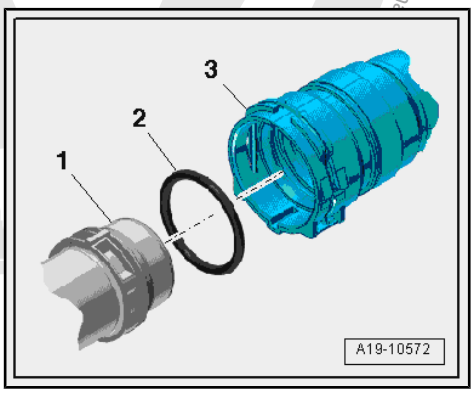

4.2 Overview - Auxiliary Cooler

Note

For vehicles with a DSG® transmission depending on the version an auxiliary cooler is installed front right.

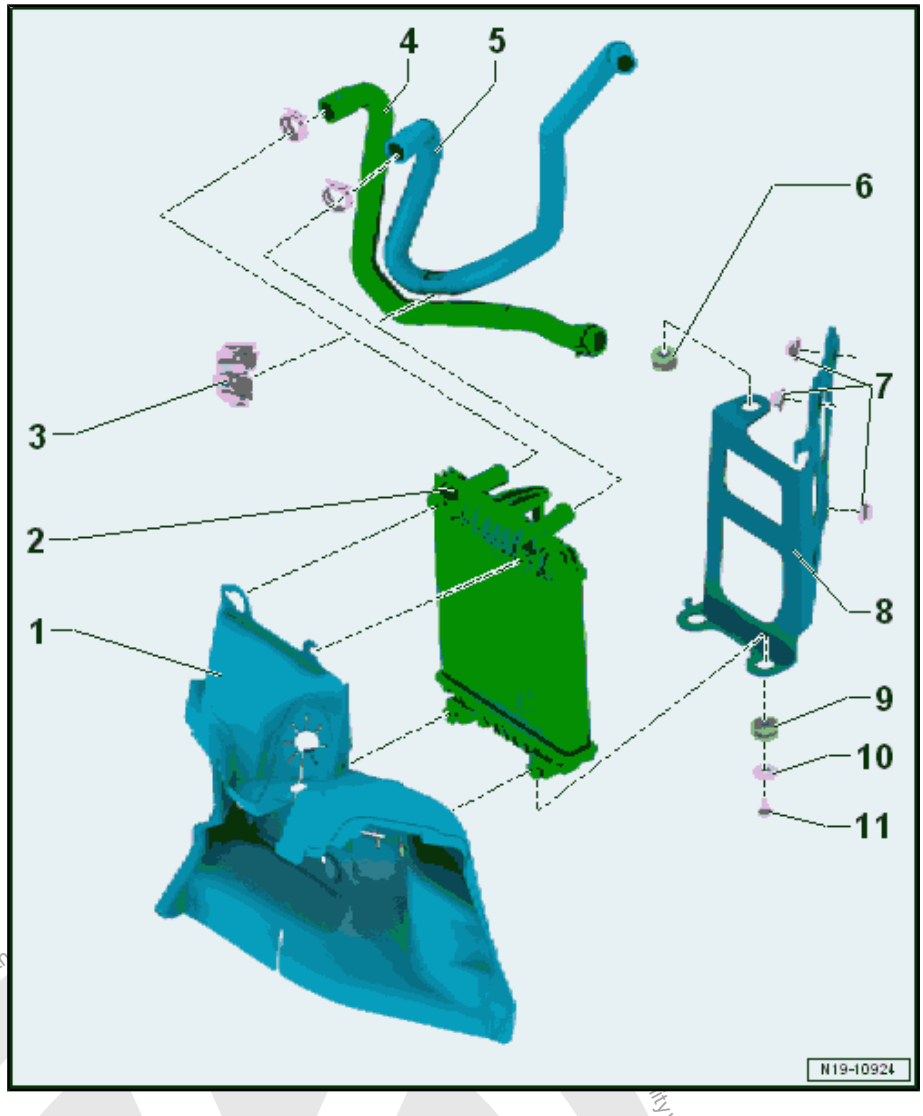

1 - Air Guide

2 - Auxiliary Cooler
- ❑ Removing and installing. Refer to ⇒ "4.7 Auxiliary Cooler, Removing and Installing", page 251 .

3 - Hose Bracket

4 - Coolant Hose
- ❑ Return flow

5 - Coolant Hose
- ❑ Supply flow

6 - Radiator Mount
- ❑ Upper

7 - Nuts
- ❑ 9 Nm

8 - Bracket
- ❑ For auxiliary cooler

9 - Radiator Mount
- ❑ Lower

10 - Rubber Buffer

11 - Bolt
- ❑ 3.5 Nm

Protected by copyright. Copying for private or commercial purposes, in part or in whole, is not permitted unless authorised by Volkswagen AG. Copyright by Volkswagen AG. No liability with respect to the correctness of information in this document.

Copyright by Volkswagen AG. Volkswagen AG does not guarantee or accept any liability in whole, is not permitted unless authorised by Volkswagen AG. Volkswagen AG does not guarantee or accept any liability

4.3 Overview - Fan Shroud and Radiator Fan

1 - Bolt

- ❑ 5 Nm

2 - Fan Shroud

- ❑ Removing and installing. Refer to ⇒ "4.5 Fan Shroud, Removing and Installing", page 249 .

3 - Bolt

- ❑ 5 Nm

4 - Coolant Fan - V7-

- ❑ Removing and installing. Refer to ⇒ "4.6.1 Coolant Fan V7 , Removing and Installing", page 250 .

5 - Coolant Fan 2 - V177-

- ❑ Removing and installing. Refer to ⇒ "4.6.2 Coolant Fan 2 V177 , Removing and Installing", page 251 .

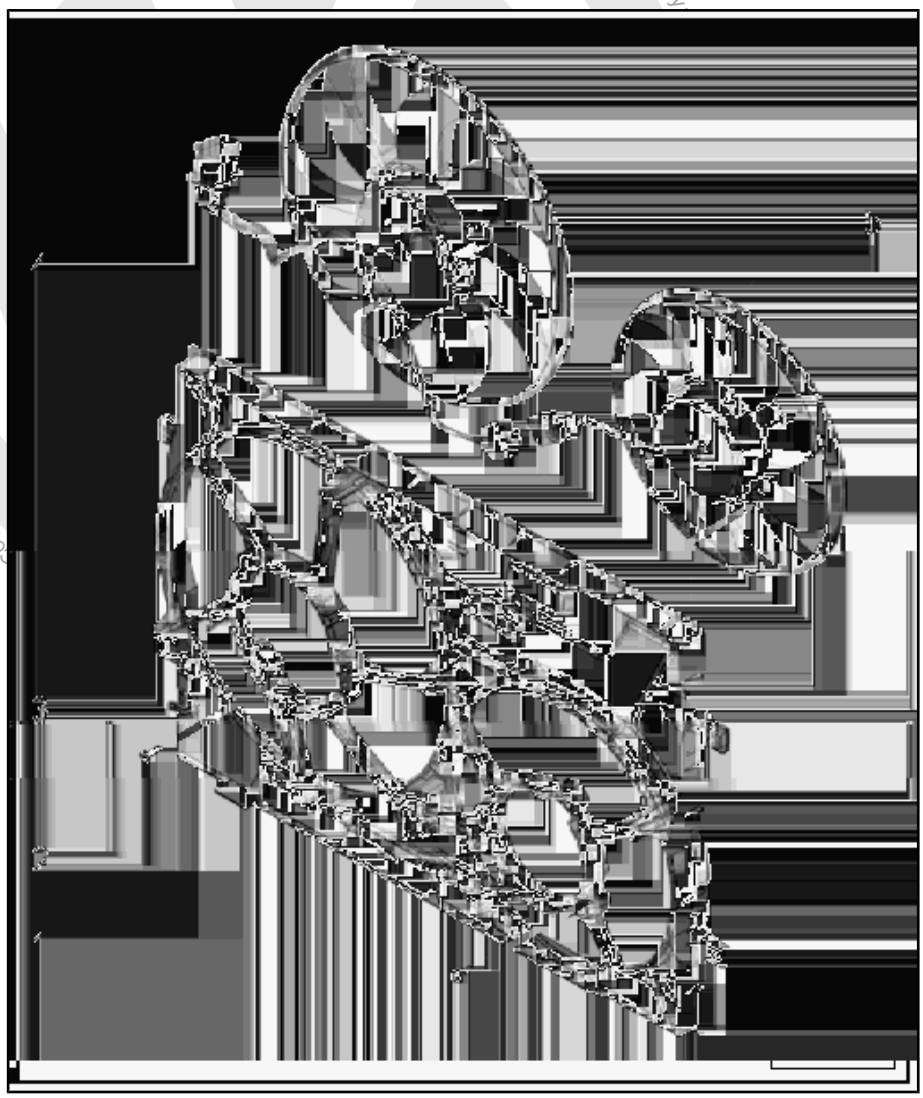

4.4 Radiator, Removing and Installing

Caution

This procedure contains mandatory replaceable parts. Refer to component overview prior to starting procedure.

Mandatory Replacement Parts

- ♦ O-rings - Radiator

Removing

– Drain the coolant. Refer to ⇒ "1.3 Coolant, Draining and Filling", page 217 .

– Remove upper left coolant hose from radiator -arrow-.

– Remove the fan shroud. Refer to
⇒ “4.5 Fan Shroud, Removing and Installing”, page 249 .

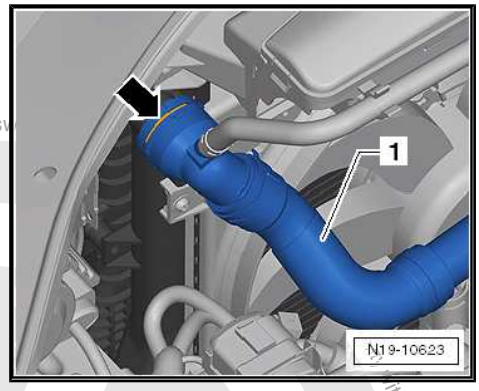

– Unclip the air guides -1- on both sides of the lock carrier -2- in direction of -arrows-.

– To do this release the catches -3- in the direction of -arrow- and remove the air guide. Ignore the lower arrows.

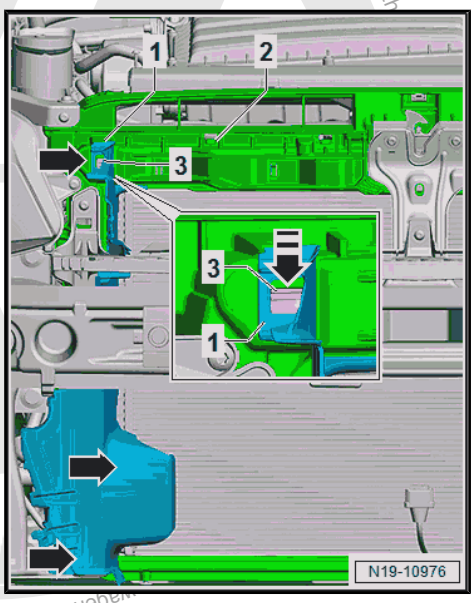

– Through the openings in the lock carrier, press the left and right radiator locking rings -arrow- and remove the coolant cooler from the charge air cooler.

– Pivot the radiator to the engine and lift upward from the charge air cooler bracket. Remove radiator downward.

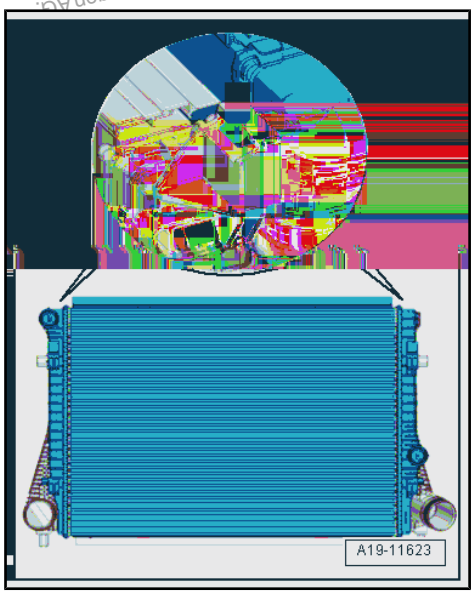

Protected by copyright. Copying for private or commercial purposes, in part or in whole, is not permitted unless authorised by Volkswagen AG. Volkswagen AG

Installing

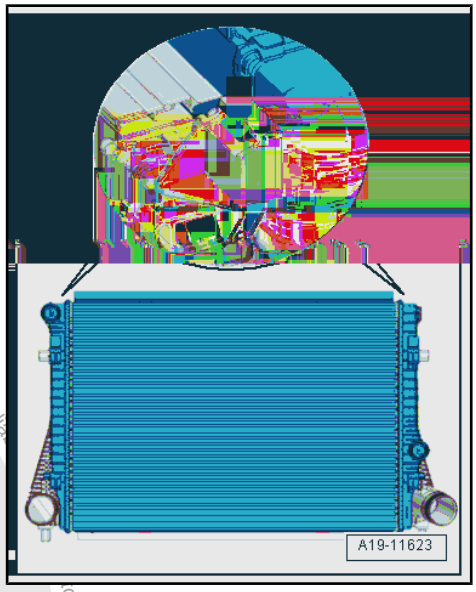

- If there are small impressions on the fins, pay attention to the following. Refer to ⇒ “3.5 Cooler and Condenser Assembly”, page 6 .
- Replace the O-rings.
- Place the radiator at an angle in the lower charge air cooler mount and engage the radiator with each other -arrow-. Pull to make sure the catch is secure.
- Install the fan shroud. Refer to ⇒ “4.5 Fan Shroud, Removing and Installing”, page 249 .
- Connect the coolant hose to the coupling. Refer to ⇒ Fig. ““Connect the Coolant Hose to the Coupling”“ , page 245 .
- Fill with coolant. Refer to ⇒ page 222 .

Note

All of the coolant must be changed if the radiator was replaced.

Tightening Specifications

- Refer to ⇒ “4.1 Overview - Radiator/Coolant Fan”, page 244 .

4.5 Fan Shroud, Removing and Installing

Removing

- Remove the air filter housing. Refer to ⇒ “3.2 Air Filter Housing, Removing and Installing”, page 294 .
- Remove the noise insulation. Refer to ⇒ Body Exterior; Rep. Gr. 66 ; Noise Insulation; Overview - Noise Insulation .
- Loosen the hose clamps -arrows- and remove the left charge air hose -A-.

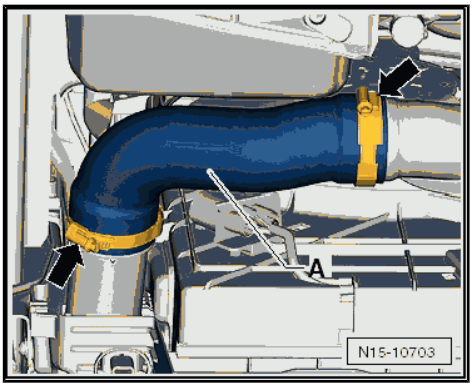

CAUTION

There is a risk of injury if the radiator fan turns on by itself.

- **Disconnect the connectors.**

Protected by copyright. Copying for private or commercial purposes, in part or in whole, is not permitted unless authorised by Volkswagen AG. Volkswagen AG does not guarantee or accept any liability to the correctness of information in this document. Copyright by Volkswagen AG.

– Disconnect the radiator fan connector -1-. To do this push the securing device -A- in the direction of -arrow A- and push the release downward.

– Push the left and right locking latches for the fan shroud at the same time in the direction of -arrow B- and remove the fan shroud upward from the radiator and remove from underneath.

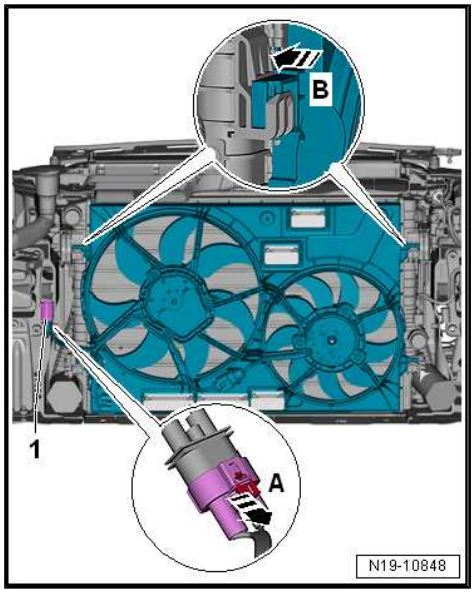

Installing

Install in reverse order of removal.

Tightening Specifications

♦ Refer to ⇒ Body Exterior; Rep. Gr. 66 ; Noise Insulation; Overview - Noise Insulation .

4.6 Coolant Fan, Removing and Installing

⇒ “4.6.1 Coolant Fan V7 , Removing and Installing”, page 250

⇒ “4.6.2 Coolant Fan 2 V177 , Removing and Installing”, page 251

4.6.1 Coolant Fan - V7-, Removing and Installing

Removing

Note

During installation, all cable ties must be installed at the same location.

– Remove the fan shroud. Refer to ⇒ “4.5 Fan Shroud, Removing and Installing”, page 249 .

– Disconnect the connector -arrow-.

– Remove the bolts -1-, and the Coolant Fan - V7- .

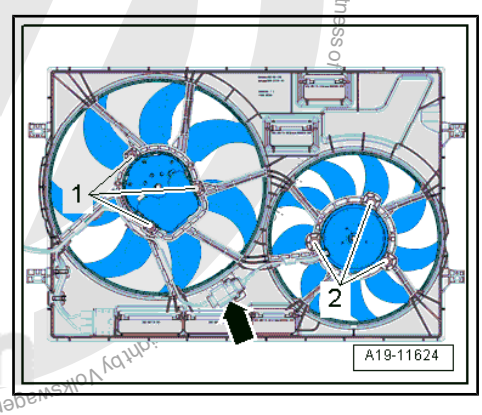

Installing

Install in reverse order of removal. Note the following:

– Install the fan shroud. Refer to ⇒ “4.5 Fan Shroud, Removing and Installing”, page 249 .

Tightening Specifications

♦ Refer to ⇒ “4.1 Overview - Radiator/Coolant Fan”, page 244 .

Protected by copyright. Copying for private or commercial purposes, in part or in whole, is not permitted unless authorised by Volkswagen AG. Volkswagen AG does not guarantee or accept any liability with respect to the correctness of information.

4.6.2 Coolant Fan 2 - V177- , Removing and Installing

Removing

Note

During installation, all cable ties must be installed at the same location.

– Remove the fan shroud. Refer to
⇒ “4.5 Fan Shroud, Removing and Installing”, page 249 .

– Disconnect the connector -arrow-.

– Remove the bolts -2-, and remove the Coolant Fan 2 - V177- .

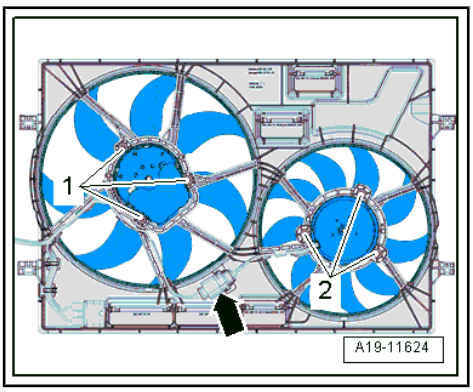

Installing

Install in reverse order of removal. Note the following:

– Install the fan shroud. Refer to
⇒ “4.5 Fan Shroud, Removing and Installing”, page 249 .

Tightening Specifications

♦ Refer to ⇒ “4.1 Overview - Radiator/Coolant Fan”, page 244 .

4.7 Auxiliary Cooler, Removing and Installing

Special tools and workshop equipment required

♦ Hose Clamps - Up To 25mm - 3094-

Note

For vehicles with a DSG® transmission depending on the version an auxiliary cooler is installed front right.

Removing

– Remove the right front wheel. Refer to ⇒ Suspension, Wheels, Steering; Rep. Gr. 44 ; Wheels and Tires .

– Remove the noise insulation. Refer to ⇒ Body Exterior; Rep. Gr. 66 ; Noise Insulation; Overview - Noise Insulation .

– Remove right front wheel housing liner. Refer to ⇒ Body Exterior; Rep. Gr. 66 ; Wheel Housing Liner; Front Wheel Housing Liner, Removing and Installing .

– Remove the front bumper cover. Refer to ⇒ Body Exterior; Rep. Gr. 63 ; Front Bumper; Bumper Cover, Removing and Installing .

Copyright by Volkswagen AG. Volkswagen AG does not guarantee or accept any liability with respect to the correctness of information in this document. Copyright by Volkswagen AG. Copying for private or commercial purposes, in part or in whole, is not permitted unless authorised by Volkswagen AG.

– Remove the air guide -A- in the direction of arrows- from the auxiliary cooler.

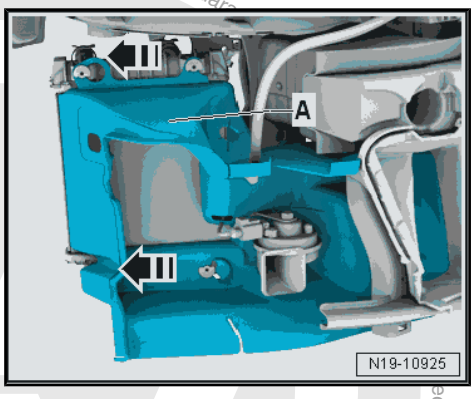

Note

Place a cloth underneath to catch any escaping coolant.

– Clamp off the coolant hoses -A and B- with Hose Clamps - Up To 25mm - 3094- . Open the spring clamps and remove the hose clamp from the auxiliary cooler.

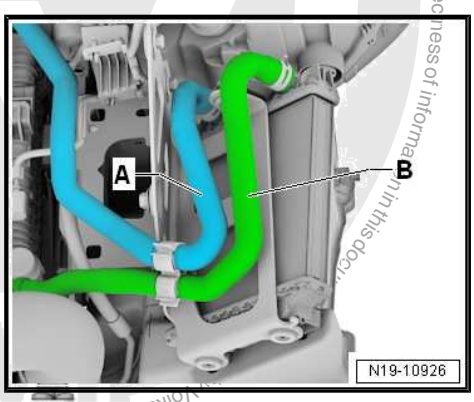

– Remove the bolts -arrows-. Remove the auxiliary cooler -A- upward from the bracket.

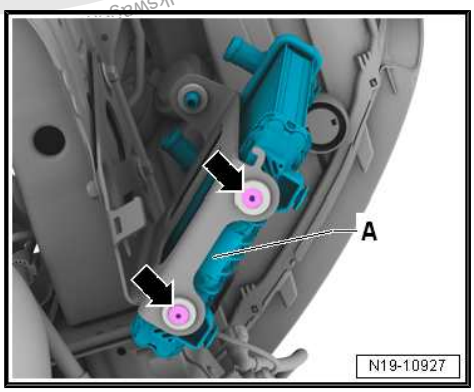

Installing

Install in reverse order of removal. Note the following:

– Install the front bumper cover. Refer to ⇒ Body Exterior; Rep. Gr. 63 ; Front Bumper; Bumper Cover, Removing and Installing .

– Install the wheel housing liner. Refer to ⇒ Body Exterior; Rep. Gr. 66 ; Wheel Housing Liner; Front Wheel Housing Liner, Removing and Installing .

– Install the noise insulation. Refer to ⇒ Body Exterior; Rep. Gr. 66 ; Noise Insulation; Overview - Noise Insulation .

– Install the wheel. Refer to ⇒ Suspension, Wheels, Steering; Rep. Gr. 44 ; Wheels and Tires .

Tightening Specifications

♦ Refer to ⇒ “4.2 Overview - Auxiliary Cooler”, page 245 .

5 Special Tools

authorised by Volkswagen AG. Volkswagen AG does not guarantee or
rial or commercial purposes, in part or in whole, is not permit

Special tools and workshop equipment required

- Cooling System Tester - Adapter - VAG1274/8-
- Hose Clip Pliers - VAS6340-
- Cooling System Charge Kit - VAS6096-
- Shop Crane - Drip Tray - VAS6208-
- Refractometer - T10007A-

- Torque Wrench 1331 Insert - Ring Wrench - 12mm - T10360-

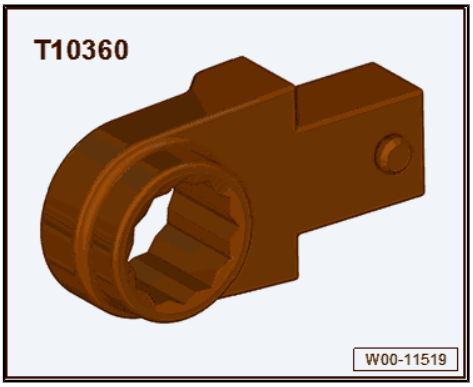

Protected by copyright. Copying for private or commercial purposes, in part or in whole, is not permitted unless authorised by Volkswagen AG. Volkswagen AG does not guarantee with respect to the correctness of information

- Cooling System Tester - VAG1274B-

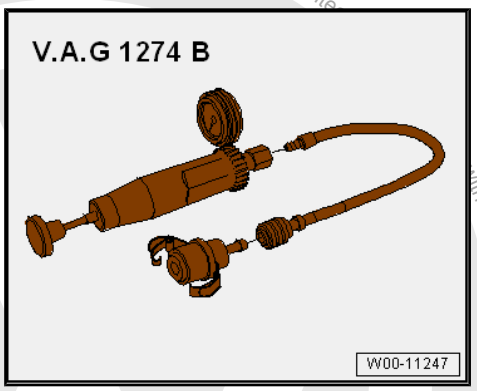

- Cooling System Tester - Adapter - VAG1274/8-

- Cooling System Tester - Adapter - VAG1274/9-

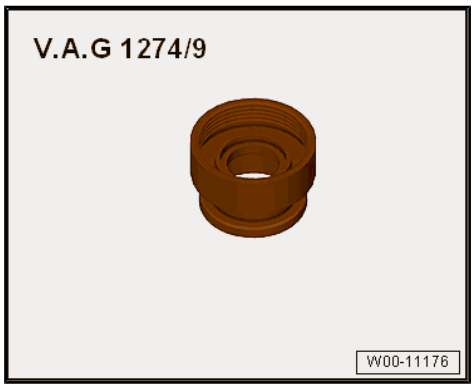

- Hose Clip Pliers - VAS6340-

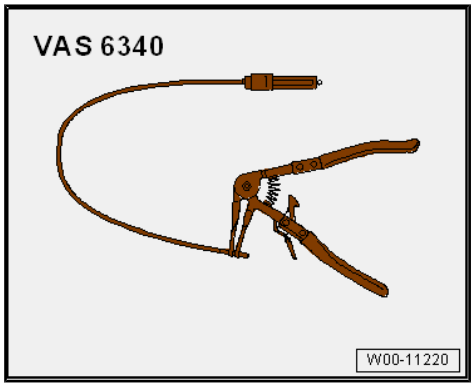

- Hose Clamps - Up To 25mm - 3094-

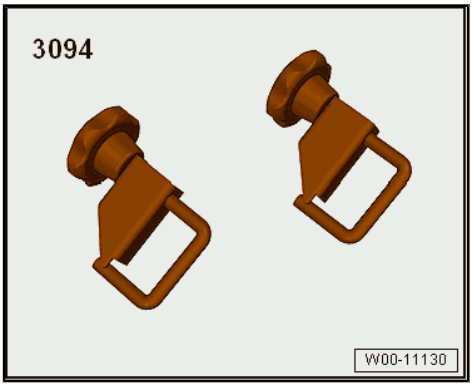

- Not Illustrated:
- Hose Clip Pliers - VAS6362-
- Torque Wrench 1410 - VAG1410-

Protected by copyright. Copying for private or commercial purposes, in part or in whole, is not permitted unless authorised by Volkswagen AG. Volkswagen AG does not guarantee or accept any liability with respect to the correctness of information in this document. Copyright by Volkswagen AG.

21 – Turbocharger, Supercharger

1 Turbocharger

⇒ “1.1 Overview - Turbocharger”, page 256 .
⇒ “1.2 Turbocharger, Removing and Installing”, page 258 .
⇒ “1.3 Charge Pressure Actuator V465 , Adjusting”, page 263 .

1.1 Overview - Turbocharger

Overview - Turbocharger, Part I. Refer to ⇒ page 256 .

Overview - Turbocharger, Part II. Refer to ⇒ page 257 .

Overview - Turbocharger, Part I

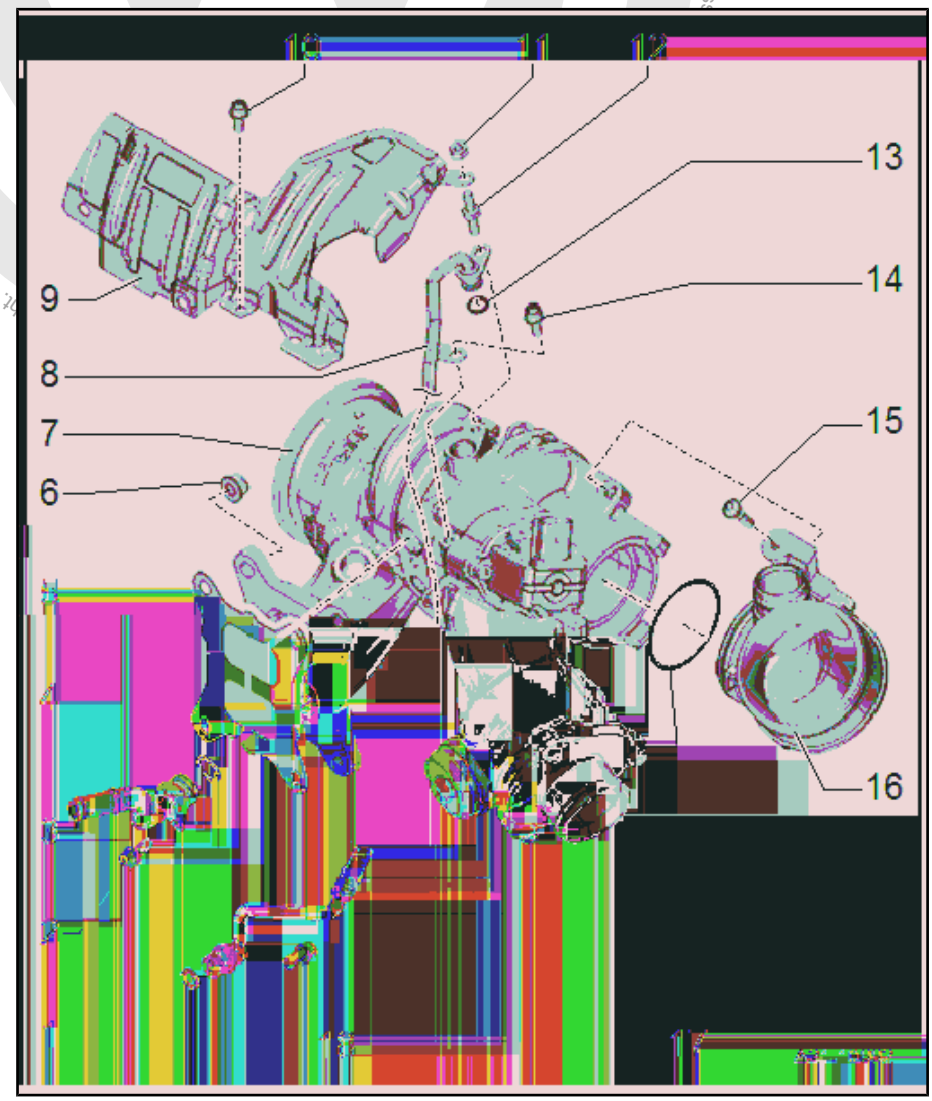

1 - O-Ring
- ❑ Replace after removing
- ❑ Coat with engine oil

2 - Bolt
- ❑ 9 Nm

3 - Coolant Supply Line

4 - O-Ring
- ❑ Replace after removing
- ❑ Coat with coolant

5 - Seal
- ❑ Replace after removing

6 - Nut
- ❑ 25 Nm
- ❑ Replace after removing

7 - Turbocharger
- ❑ Removing and installing. Refer to ⇒ “1.2 Turbocharger, Removing and Installing”, page 258 .

8 - Oil Supply Line

9 - Heat Shield

10 - Bolt
- ❑ 9 Nm

11 - Nut
- ❑ 9 Nm

12 - Bolt
- ❑ 9 Nm

13 - O-Ring
- ❑ Replace after removing
- ❑ Coat with engine oil

14 - Bolt
- ❑ 9 Nm

15 - Bolt
- ❑ 9 Nm

16 - Connection

17 - O-Ring
- ❑ Replace after removing

18 - Bolt
- ❑ 9 Nm

Overview - Turbocharger, Part II

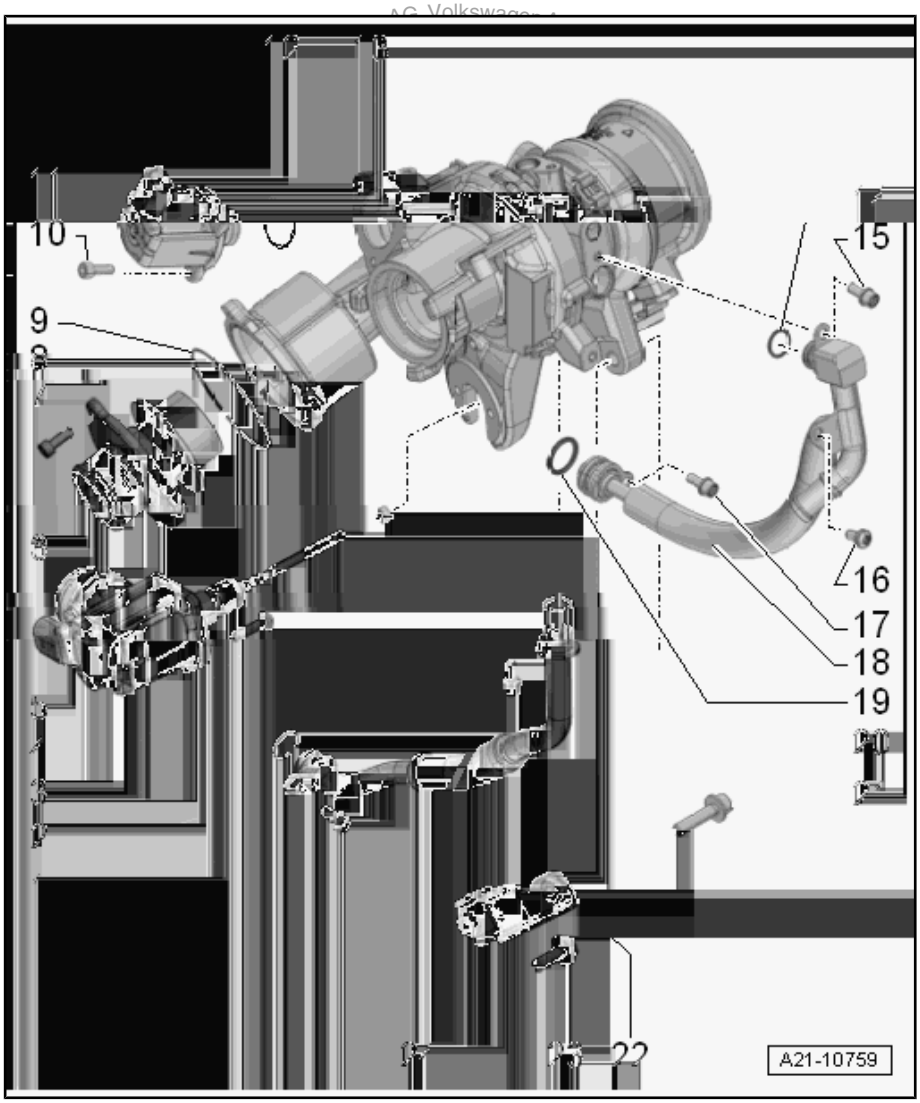

1 - Bolt
- ❑ 9 Nm

2 - Oil Return Line

3 - O-Ring
- ❑ Replace after removing
- ❑ Coat with engine oil

4 - Bolt
- ❑ 10 Nm

5 - Charge Pressure Actuator - V465-

6 - Nut
- ❑ 10 Nm
- ❑ Secure with Mini Torque Wrench - VAS6854-

7 - Bolt
- ❑ 9 Nm

8 - Connection

9 - O-Ring
- ❑ Replace after removing

10 - Bolt
- ❑ 9 Nm

11 - Turbocharger Recirculation Valve - N249-
- ❑ Note the Installation position. Refer to ⇒ Fig. ""Installation Position of Turbocharger Recirculation Valve - N249- "" , page 258 .

12 - O-Ring
- ❑ Replace after removing

13 - Turbocharger
- ❑ Removing and installing. Refer to ⇒ "1.2 Turbocharger, Removing and Installing", page 258 .

14 - O-Ring
- ❑ Replace after removing
- ❑ Coat with coolant

15 - Bolt
- ❑ 9 Nm

16 - Bolt

- ❑ 9 Nm

17 - Bolt

- ❑ 9 Nm

18 - Coolant Supply Line

19 - O-Ring

- ❑ Replace after removing
- ❑ Coat with coolant

20 - O-Ring

- ❑ Replace after removing
- ❑ Coat with engine oil

21 - Bolt

- ❑ 30 Nm
- ❑ Coat the thread with hot bolt paste. Refer to the Parts Catalog.

22 - Bracket

- ❑ For the turbocharger

23 - Bolt

- ❑ 30 Nm

24 - Bolt

- ❑ 9 Nm

Installation Position of Turbocharger Recirculation Valve - N249-

– Note installation location -arrows-.

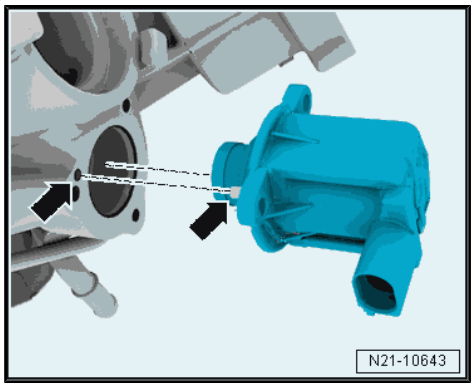

1.2 Turbocharger, Removing and Installing

Special tools and workshop equipment required

- ♦ Engine Bung Set - VAS6122-
- ♦ Hose Clip Pliers - VAS6362-
- ♦ Tensioning Strap - T10038-

> **Caution**
>
> ***This procedure contains mandatory replaceable parts. Refer to component overview prior to starting procedure.***

Mandatory Replacement Parts

- ♦ Nuts - Turbocharger
- ♦ O-rings - Turbocharger

Protected by copyright. Copying for private or commercial purposes, in part or in whole, is not permitted unless authorised by Volkswagen AG. Volkswagen AG does not guarantee or accept any liability with respect to the correctness of information in this document. Copyright by Volkswagen AG.

- Seal - Turbocharger
- Bolts- Pendulum Support

Note

- *If mechanical damage (such as a destroyed compression wheel) is found on the turbocharger, just replacing the turbocharger is not enough. To avoid damage later, perform the following steps:*
- *Check the air filter housing, air filter element and air guide hoses for contamination.*
- *Check the entire charge air circuit and charge air cooler for foreign objects.*
- *If there are foreign objects in the charge air system, clean the charge air circuit and replace the charge air cooler if necessary.*

Removing

– Drain the coolant. Refer to ⇒ “1.3 Coolant, Draining and Filling”, page 217 .

– Remove front exhaust pipe with catalytic converter. Refer to ⇒ “2.2 Catalytic Converter, Removing and Installing”, page 349 .

– Remove the air filter housing with the air guide pipe to the turbocharger. Refer to ⇒ “3.2 Air Filter Housing, Removing and Installing”, page 294 .

– Loosen the hose clamp -2-.

– Remove the bolt -1- and then remove the air guide pipe from the turbocharger.

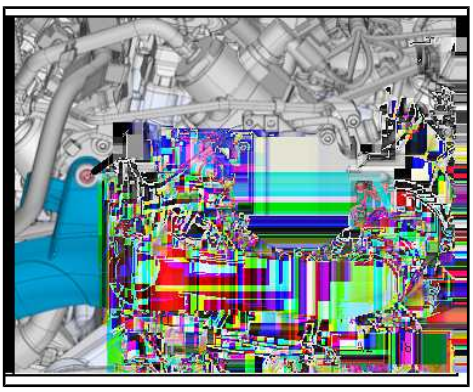

– Remove the coolant hose -arrow-.

– Disconnect connectors -1 and 2-. Open the bracket -3-.

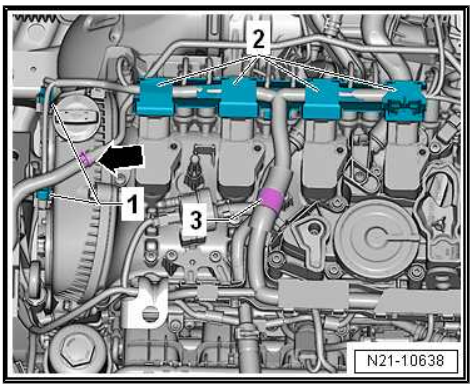

Reproduced by Volkswagen AG. Volkswagen AG does not guarantee or accept any liability with respect to the correctness of information in this document. Copyright by Volkswagen AG. Copying for private or commercial purposes, in part or in whole, is not permitted unless authorised by Volkswagen AG.

– If applicable, remove bolt -1- for the ground cable. Remove the coolant hose -2-.

– Remove the available connectors -arrows-.

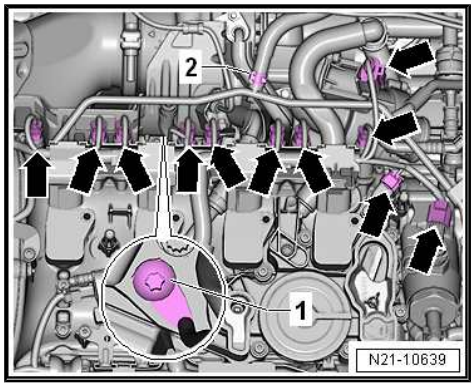

– Release the catch in direction of -arrow- and remove the wiring duct -4- upward from the bracket.

– Remove the bolts -1, 2 and 3-. Pivot the coolant pipe to the side.

– Remove the Oxygen Sensor 1 before Catalytic Converter -GX10- . Refer to
⇒ “8.2 Oxygen Sensor 1 before Catalytic Converter GX10 , Removing and Installing”, page 333 .

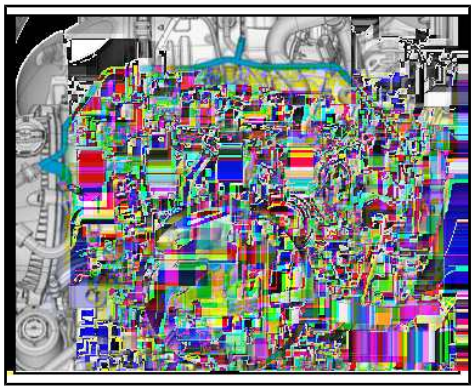

On Vehicles with the Engine Codes CNTA, CXCA, CXDA, CXCB

– Remove the cam adjustment actuators -arrows-.

For All Vehicles

– Remover the ignition coils with the power output stages. Refer to
⇒ “1.3 Ignition Coils with Power Output Stages, Removing and Installing”, page 357 .

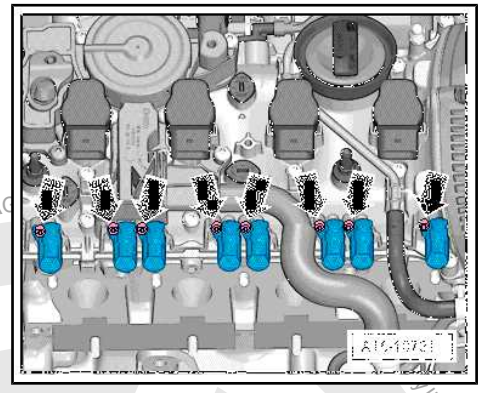

– Remove the bolts -arrows- and nut -1-.

– Remove the heat shield -2-.

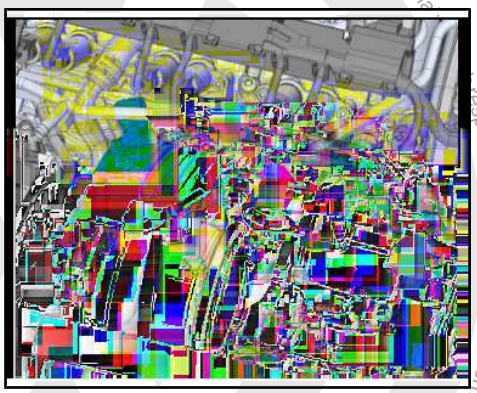

Protected by copyright. Copying for private or commercial purposes, in part or in whole, is not permitted unless authorised by Volkswagen AG. Copyright by Volkswagen AG. No liability in respect to the correctness of information in this document.

– Remove the bolt -1-. Just loosen bolt -3-.

– Remove the turbocharger bracket -2-.

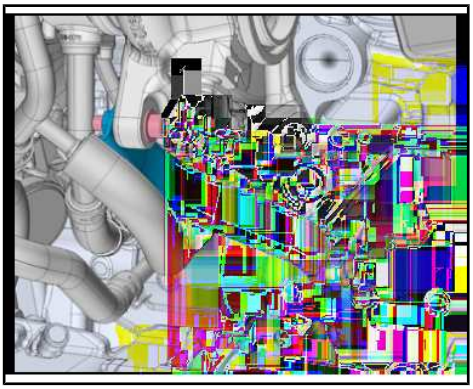

– Disconnect the connectors -1 and 3-.

On Vehicles with the Engine Code CXDA

– Press the release button on the crankcase ventilation hose -2- and remove the hose.

On Vehicles with Engine Codes CXBA, CXBB, CNSB, CXCA, CNTB, CNTA, CXCB

Remove the connection -item 6- ⇒ Item 6 (page 195) together with crankcase ventilation hose -2-.

– Remove the bolts -1- and then remove the connections.

– Remove the bolts -2, and 3-, and remove the oil supply line and oil return pipe.

– Open the hose clamp -arrow -.

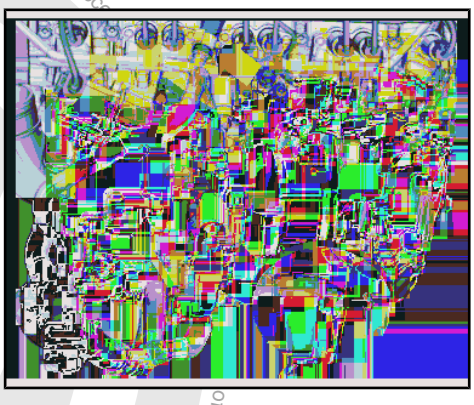

Note

The following work step is necessary to achieve some more room between the cylinder head and the bulkhead.

– Remove bolts -1, 2 and 3- and remove pendulum support.

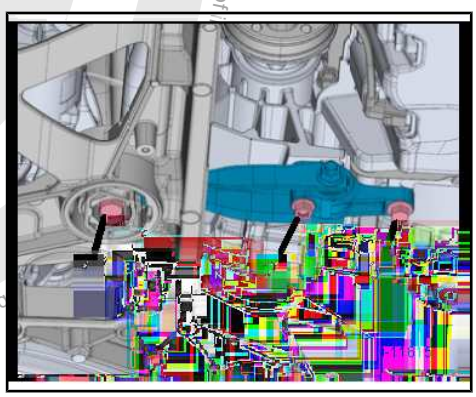

Protected by copyright. Copying for private or commercial purposes, in part or in whole, is not permitted unless authorised by Volkswagen AG. Volkswagen AG does not guarantee the accuracy of the information contained in this document.

– Pull the engine toward the rear with the Tensioning Strap - T10038- approximately 20 mm.

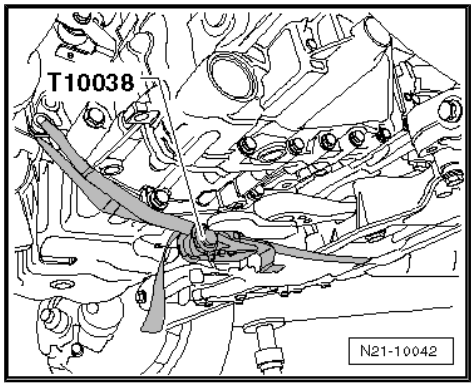

– Remove the nuts -arrows-.

– Remove the turbocharger from the cylinder head and pry up upward.

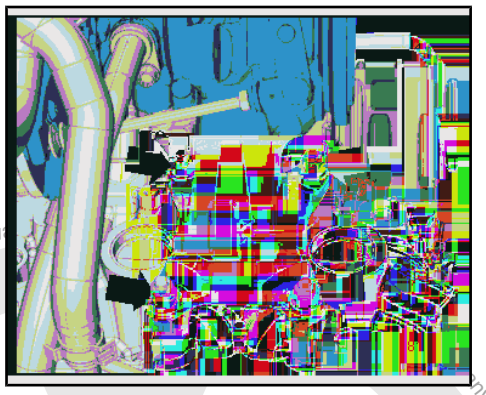

Installing

Install in reverse order of removal. Note the following:

Note

- *Replace seals, gaskets, O-rings and self-locking nuts.*
- *Coat the stud bolts on the turbocharger with hot bolt paste; hot bolt paste. Refer to the Parts Catalog.*
- *Fill the turbocharger with engine oil at the oil supply line connection.*
- *Hose connections and charge air system hoses must be free of oil and grease before installing.*
- *Secure hose connections with standard production clamps. Refer to the Parts Catalog.*

– Install the front exhaust pipe with the catalytic converter. Refer to ⇒ “2.2 Catalytic Converter, Removing and Installing”, page 349 .

– Install the exhaust system free of tension. Refer to ⇒ “1.4 Exhaust System, Installing without Tension”, page 345 .

– Fill with coolant. Refer to ⇒ page 218 .

– Check the oil level.

Note

After installing turbocharger, let engine idle for approximately 1 minute without increasing engine speed. This ensures adequate oil supply to the turbocharger.

Tightening Specifications

- Refer to ⇒ “1.1 Overview - Turbocharger”, page 256 .
- Refer to ⇒ “3.1 Overview - Air Filter Housing”, page 293 .
- Refer to ⇒ “8.1 Overview - Heated Oxygen Sensor”, page 333 .

Protected by copyright. Copying for private or commercial purposes, in part or in whole, is not permitted unless authorised by Volkswagen AG. Copyright by Volkswagen AG. No liability with respect to the correctness of information in this document.

1.3 Charge Pressure Actuator - V465- , Adjusting

Special tools and workshop equipment required

- Mini Torque Wrench - VAS6854-
- Vehicle Diagnostic Tester

Removing

Note

Ignore item -4-.

– Remove the bolt -2- and the screw-type clamp.

– Remove the noise insulation. Refer to ⇒ Body Exterior; Rep. Gr. 66 ; Noise Insulation; Overview - Noise Insulation .

– Remove the nuts -1 and 3-.

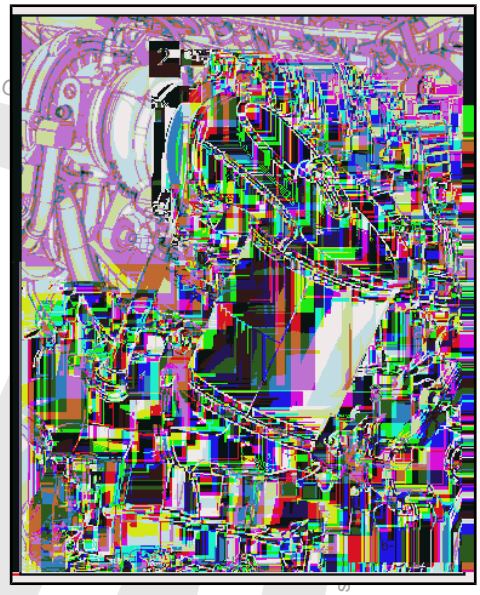

– Remove bolts -arrows- and set the catalytic converter slightly aside.

– Turn on the ignition and select the following menu items on the Vehicle Diagnostic Tester :

- `01 - Engine Electronics`
- `Guided Functions`
- `01 - Charge Pressure Actuator V465 Adjusting`

– Adjust the charge pressure actuator linkage to the instructions in the Vehicle Diagnostic Tester .

– Tighten the lock nut with the Mini Torque Wrench - VAS6854- .

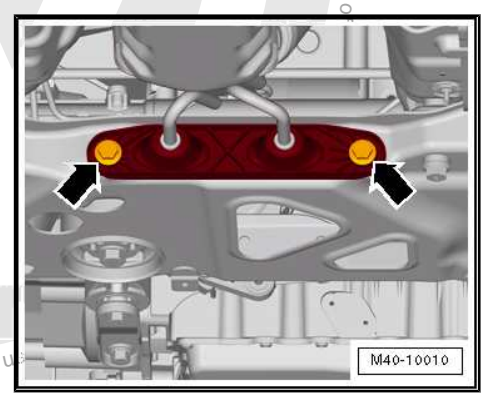

Tightening Specifications

- Refer to ⇒ “1.1 Overview - Turbocharger”, page 256 .

Protected by copyright. Copying for private or commercial purposes, in part or in whole, is not permitted unless authorised by Volkswagen AG. Volkswagen AG

2 Charge Air System

⇒ “2.1 Overview - Charge Air System”, page 264 .

⇒ “2.2 Overview - Charge Air Hose Connections”, page 265 .

⇒ “2.3 Charge Air Cooler, Removing and Installing”, page 265 .

⇒ “2.4 Charge Air Pressure Sensor G31 , Removing and Installing”, page 269 .

⇒ “2.5 Charge Air System, Checking for Leaks”, page 269 .

2.1 Overview - Charge Air System

Note

- *Assembly of screw-type clamps for the charge air hose connections. Refer to ⇒ “2.2 Overview - Charge Air Hose Connections”, page 265 .*
- *Before testing or performing a repair, check all air guide pipes and hoses and all vacuum lines for leaks and secure seating.*
- *Follow the guidelines for clean working conditions. Refer to ⇒ “3.1 Clean Working Conditions”, page 5 .*

1 - Air Guide Pipe

2 - Grommet

3 - Spacer Sleeve

4 - Bolt

- ❑ 7 Nm

5 - Air Guide Hose

- ❑ Installing. Refer to ⇒ “2.2 Overview - Charge Air Hose Connections”, page 265 .

6 - Air Guide

7 - Charge Air Cooler

- ❑ Removing and installing. Refer to ⇒ “2.3 Charge Air Cooler, Removing and Installing”, page 265 .

8 - Air Guide

9 - Rubber Bushing

- ❑ For the charge air cooler

10 - Rubber Bushing

- ❑ For the charge air cooler

11 - Bolt

- ❑ 7 Nm

12 - Spacer Sleeve

13 - Grommet

14 - Bolt

- ❑ 5 Nm

15 - Charge Air Pressure Sensor - G31-

- ❑ Removing and installing. Refer to
  ⇒ “2.4 Charge Air Pressure Sensor G31 , Removing and Installing”, page 269

16 - O-Ring

- ❑ Replace after removing

17 - Air Guide Hose

- ❑ Installing. Refer to ⇒ “2.2 Overview - Charge Air Hose Connections”, page 265 .

18 - Air Guide Pipe

2.2 Overview - Charge Air Hose Connections

Installing Hose Connections with Threaded Connections

Note

Tighten the clamps -A- on the charge air pipes to 5.5 Nm. An insufficient or excessive tightening torque can cause the charge air hose to come off the charge air pipe while driving.

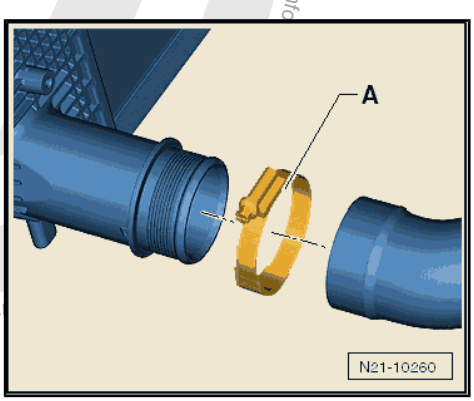

- Before testing or performing a repair, check all air guide pipes and hoses and all vacuum lines for leaks and secure seating.
- Clean the hose connections as well as the air guide pipes and hoses before installing, they must be free of oil and grease.
- Secure hose connections with standard production clamps. Refer to the Parts Catalog.
- The screws on the used clamps must be sprayed with a rust remover before installing.

2.3 Charge Air Cooler, Removing and Installing

Special tools and workshop equipment required

- ♦ Engine Bung Set - VAS6122-

Caution

This procedure contains mandatory replaceable parts. Refer to component overview prior to starting procedure.

Mandatory Replacement Parts

- ♦ O-rings - Charge Air Cooler

Removing

- Remove the fan shroud. Refer to
  ⇒ “4.5 Fan Shroud, Removing and Installing”, page 249 .
- Remove the radiator. Refer to
  ⇒ “4.4 Radiator, Removing and Installing”, page 247 .
- Remove the front bumper cover. Refer to ⇒ Body Exterior; Rep. Gr. 63 ; Front Bumper; Bumper Cover, Removing and Installing .
- Remove the bolts -1 and 3-.

– Open the retainer in direction of -arrow- and remove the cover -2-.

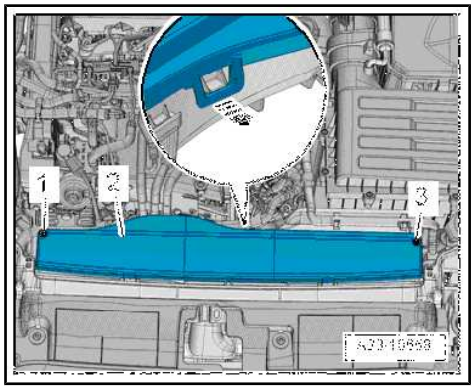

– Free up the coolant hose -2-.

– Open the retaining tabs in direction of -arrows-, remove the upper air duct -1-.

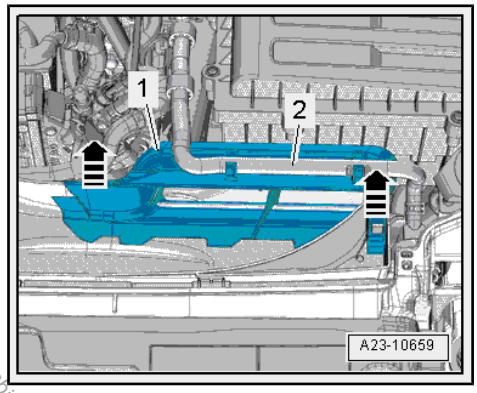

– Remove the left and right bolts -arrow-.

– Unclip the air guide lower section -1- and remove.

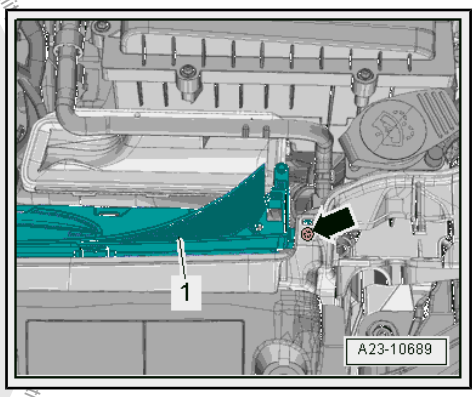

– Lift the clamp -arrow- and remove the upper left coolant hose from the radiator.

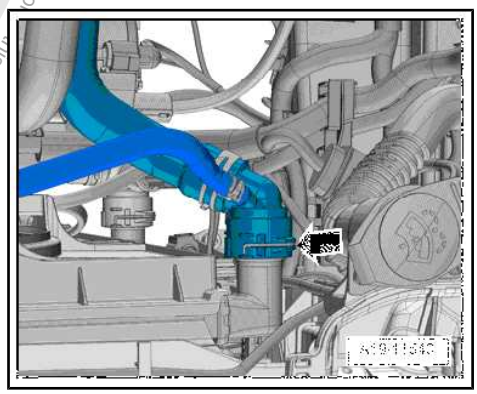

Protected by copyright. Copyright for private or commercial purposes, in part or in whole, is not permitted unless authorised by Volkswagen AG. Volkswagen AG does not guarantee or accept any liability with respect to the correctness of information in this document. Copyright by Volkswagen AG.

– Remove the center guide -A- from the lock carrier -arrows-.

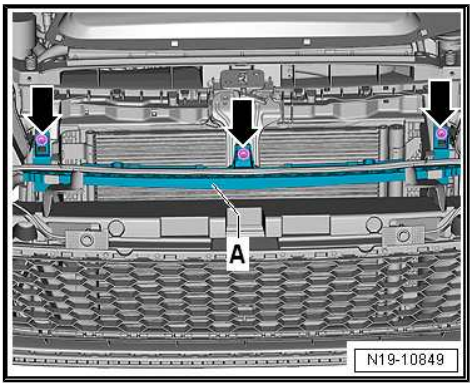

– Remove the left and right radiator mount catches in direction of -arrows- with a side cutter. Push the upper coolant radiator slightly to the engine.

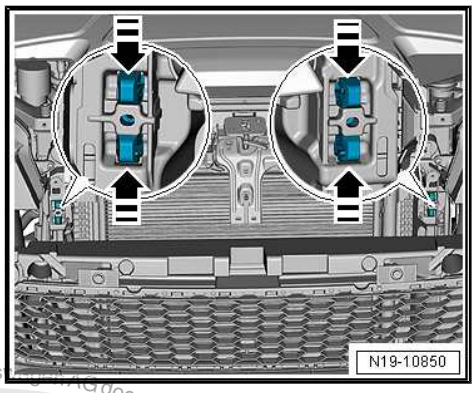

Note

The radiator mount with be used again when installing. It is then attached to the lock carrier. Bolts. Refer to the Parts Catalog.

– Loosen the clamps -1 and 2- and remove the air guide hose.

– Seal the open lines and connections with clean plugs from the Engine Bung Set - VAS6122- .

– Have a second technician release the retaining clamps -1- in the direction of -arrow A- . Remove the condenser -3- upward out of the mounts in direction of -arrows B- .

– Secure the condenser to the lock carrier.

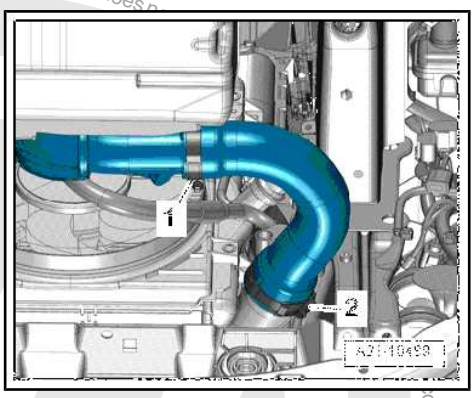

– Remove the charge air cooler downward.

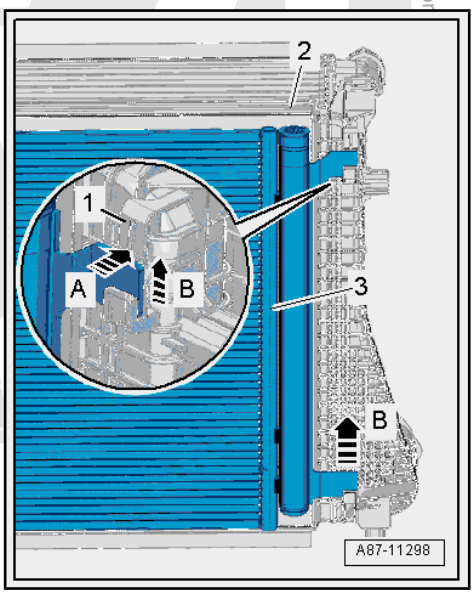

Protected by copyright. Copying for private or commercial purposes, in part or in whole, is not permitted unless authorised by Volkswagen AG. Volkswagen AG does not

Installing

Install in reverse order of removal. Note the following:

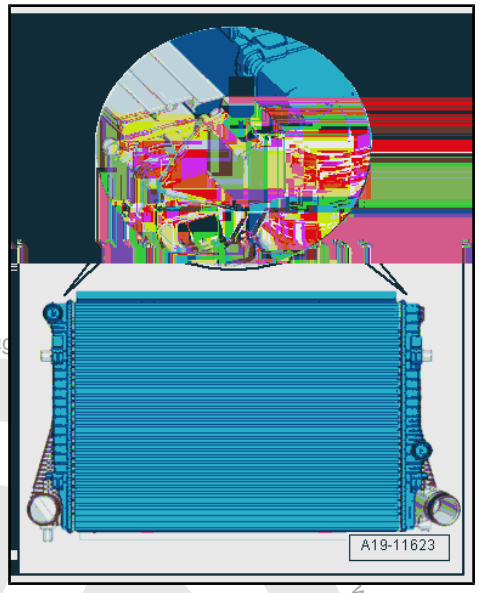

- If there are small impressions on the fins, pay attention to the following. Refer to ⇒ “3.5 Cooler and Condenser Assembly”, page 6 .
- Replace the O-rings.
- Place the radiator at an angle in the lower charge air cooler mount and engage the radiator with each other -arrow-. Pull to make sure the catch is secure.
- Pivot the charge air cooler with the radiator in the lock carrier. Pay attention that the radiator mount is seated correctly in the lock carrier.

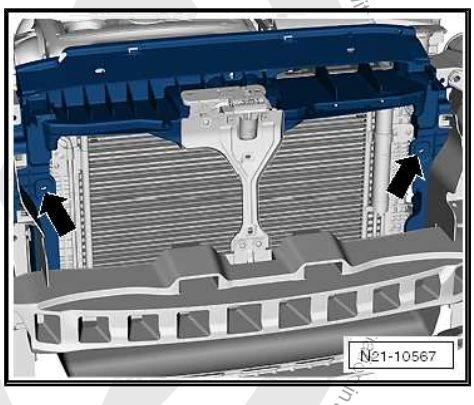

- Secure the radiator mount, which was pinched off by the catch to the lock carrier -arrows- Bolts. Refer to the Parts Catalog.
- Install the front bumper cover. Refer to ⇒ Body Exterior; Rep. Gr. 63 ; Front Bumper; Bumper Cover, Removing and Installing .
- Install the fan shroud. Refer to ⇒ “4.5 Fan Shroud, Removing and Installing”, page 249 .
- Connect the coolant hose to the coupling. Refer to ⇒ Fig. ““Connect the Coolant Hose to the Coupling”“ , page 245 .
- Fill with coolant. Refer to ⇒ page 222 .

Note

- *All of the coolant must be changed if the radiator was replaced.*
- *The hose connections and charge air system hoses must be free of oil and grease before installing.*
- *Secure hose connections with standard production clamps. Refer to the Parts Catalog.*
- *In order to be able to securely mount the charge air hoses on their connections, the screws on the already used screw-type clamps must be sprayed with a rust remover before installing.*

Tightening Specifications

Bolt	Tightening Specification
Bolted connection to lock carrier	5 Nm

Tightening Specifications

- Refer to ⇒ “4.1 Overview - Radiator/Coolant Fan”, page 244 .
- Refer to ⇒ “2.1 Overview - Charge Air System”, page 264 .

Protected by copyright. Copying for private or commercial purposes in part or in whole is not permitted unless authorised by Volkswagen AG. Volkswagen AG. Copyright by Volkswagen AG.

2.4 Charge Air Pressure Sensor - G31- , Removing and Installing

Removing

Caution

This procedure contains mandatory replaceable parts. Refer to component overview prior to starting procedure.

Mandatory Replacement Parts

- ♦ O-ring - Charge Air Pressure Sensor

– Remove the noise insulation. Refer to ⇒ Body Exterior; Rep. Gr. 66 ; Noise Insulation; Overview - Noise Insulation .

– Disconnect the connector -2-.

– Remove the bolts -1- and remove the Charge Air Pressure Sensor - G31- from the air duct pipe.

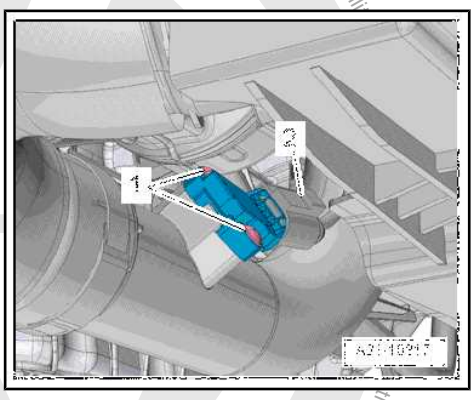

Installing

Install in reverse order of removal. Note the following:

Note

Replacing the O-ring.

Tightening Specifications

- ♦ Refer to ⇒ "2.1 Overview - Charge Air System", page 264 .
- ♦ Refer to ⇒ Body Exterior; Rep. Gr. 66 ; Noise Insulation; Overview - Noise Insulation .

2.5 Charge Air System, Checking for Leaks

Special tools and workshop equipment required

- ♦ Turbo System Tester Kit - VAG1687-
- ♦ Turbo System Tester Kit - Adapter 10 - VAG1687/10-
- ♦ Turbo System Tester Kit - Adapter - VAG1687/14-
- ♦ Ultrasonic Tester - VAG1842S-

Procedure

– Loosen the hose clamps -1 and 2- and remove the air guide pipe.

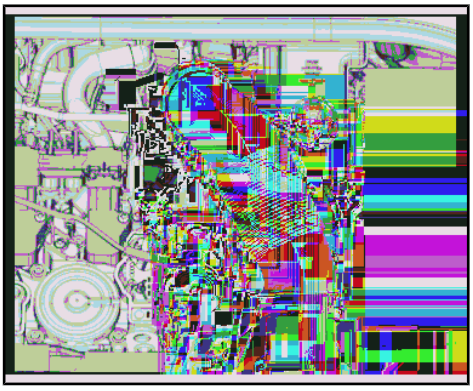

Protected by copyright. Copying for private or commercial purposes, in part or in whole, is not permitted unless authorised by Volkswagen AG. Volkswagen AG does not guarantee or accept any liability with respect to the correctness of information in this document. Copyright by Volkswagen AG.

– Connect the Turbo System Tester Kit - Adapter 10 - VAG1687/10- with the Adapter - VAG1687/14- to the turbocharger.
– Connect the Turbo System Tester Kit - VAG1687- to the adapter.

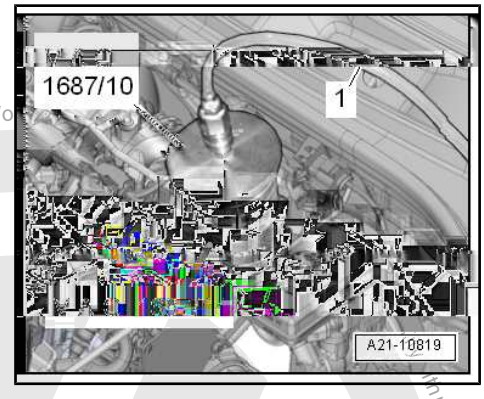

Prepare the Turbo System Tester Kit - VAG1687- as follows:

– Pull the pressure regulating valve -2- upward and remove completely, close the valves -3 and 4-.
– Connect the Turbo System Tester Kit - VAG1687- to compressed air -1- with a commercially available adapter piece.

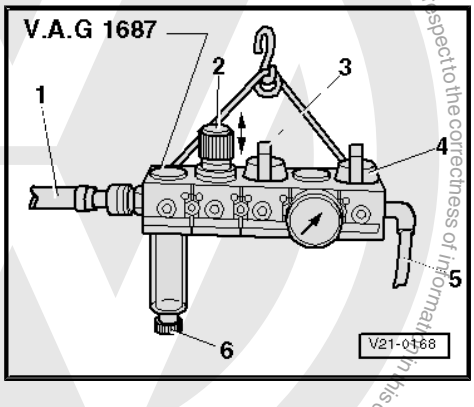

Note

- *If there is water in the viewing glass, it must be drained through the drain plug -6-.*
- *Pressure must not exceed 0.5 bar (7.2 psi)!*

– Open the valve -3-.
– Set the pressure to 0.5 bar (7.2 psi) using the pressure control valve -2-.
– Open the valve -4- and wait until the test circuit is filled. Regulate the pressure to 0.5 bar (7.2 psi) again if necessary.
– Listen, feel and use commercially available leak detection spray or the Ultrasonic Tester - VAG1842S- to check the charge air system for leaks.

Note

- *A small quantity of air dissipates via valves in engine. A pressure retention test is not possible for this reason.*
- *Information on the Ultrasonic Tester - VAG1842S- . Refer to the Operating Instructions.*
- *Release the pressure in the test circuit by pulling off the hose coupling before removing the adapter.*

Assembling

Assembly is performed in reverse order.

Protected by copyright. Copying for private or commercial purposes, in part or in whole, is not permitted unless authorised by Volkswagen AG. Copyright by Volkswagen AG.

3 Special Tools

Special tools and workshop equipment required

- Tensioning Strap - T10038-

- Turbo System Tester Kit - VAG1687-

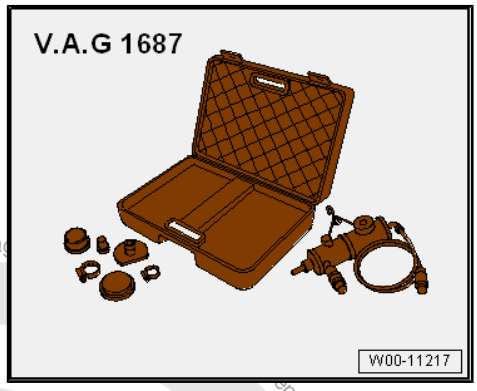

- Engine Bung Set - VAS6122-

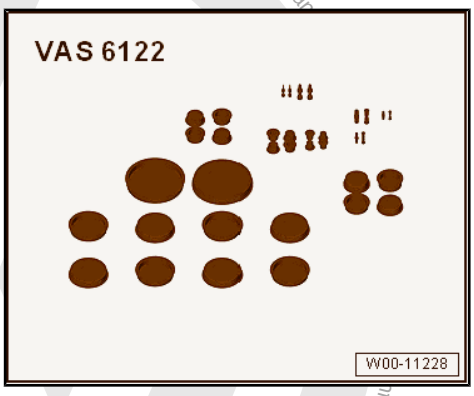

- Hose Clip Pliers - VAS6362-

- Not Illustrated:
- Mini Torque Wrench - VAS6854-

Protected by copyright. Copying for private or commercial purposes, in part or in whole, is not permitted unless authorised by Volkswagen AG. Volkswag

- Turbo System Tester Kit - Adapter 10 - VAG1687/10-
- Turbo System Tester Kit - Adapter - VAG1687/14-
- Ultrasonic Tester - VAG1842S-

Protected by copyright. Copying for private or commercial purposes, in part or in whole, is not permitted unless authorised by Volkswagen AG. Volkswagen AG does not guarantee or accept any liability with respect to the correctness of information in this document. Copyright by Volkswagen AG.

24 – Multiport Fuel Injection

1 Fuel Injection System

⇒ “1.1 Overview - Component Location, Fuel Injection System”, page 273 .

⇒ “1.2 High Fuel Pressure, Reducing”, page 283 .

1.1 Overview - Component Location, Fuel Injection System

Note

Vehicles with the engine codes CNTA do not have an intake manifold-fuel injector.

Components A through H are not depicted in the exploded view illustration.

1 - Camshaft Adjustment Valve 1 - N205-

- ❑ Component location. Refer to ⇒ “2.1 Overview - Timing Chain Cover”, page 104 .
- ❑ Removing and installing. Refer to ⇒ “4.4 Camshaft Adjustment Valve 1 N205 and Exhaust Camshaft Adjustment Valve 1 N318 , Removing and Installing”, page 161 .

2 - Exhaust Camshaft Adjustment Valve 1 - N318-

- ❑ Component location. Refer to ⇒ “2.1 Overview - Timing Chain Cover”, page 104 .
- ❑ Removing and installing. Refer to ⇒ “4.4 Camshaft Adjustment Valve 1 N205 and Exhaust Camshaft Adjustment Valve 1 N318 , Removing and Installing”, page 161 .

3 - Oxygen Sensor 1 after Catalytic Converter - GX7-

- ❑ Consists of:

  Oxygen Sensor after Three Way Catalytic Converter - G130-

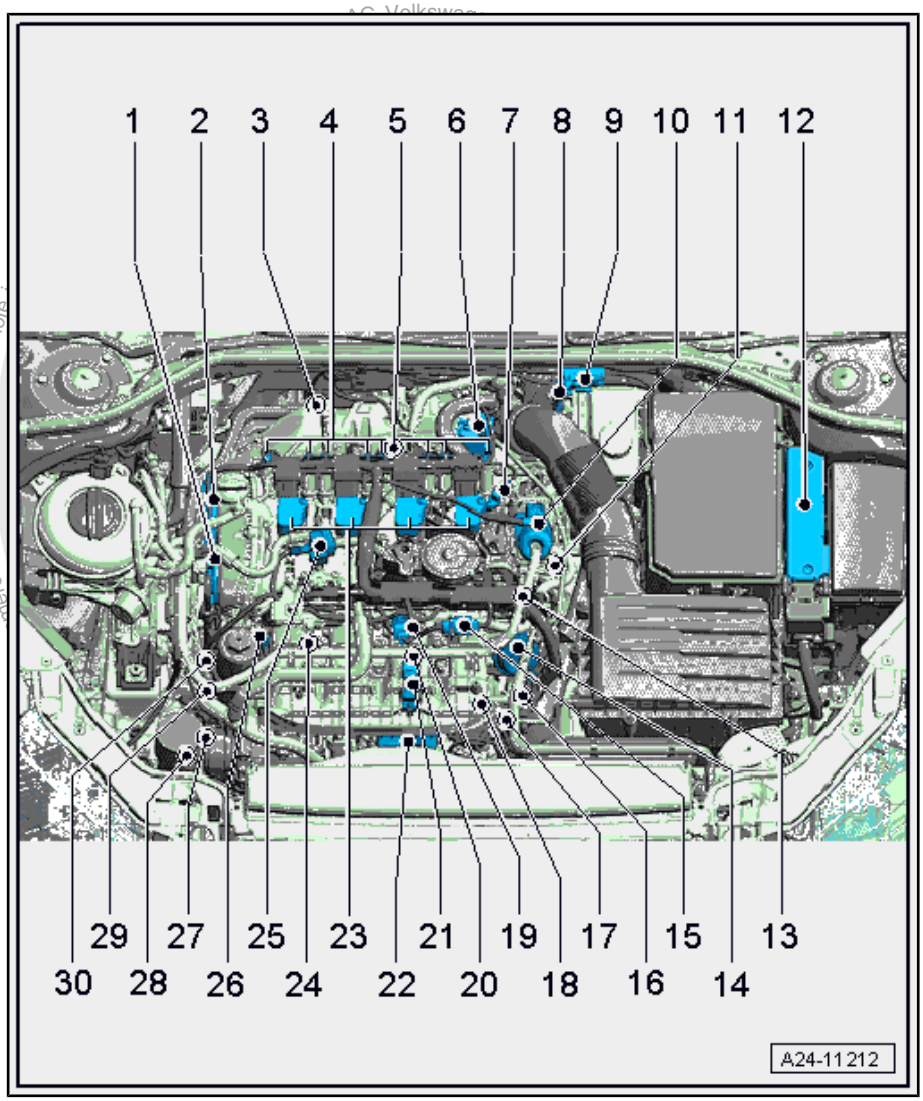

mercial purposes, in part or in whole

Heater For Oxygen Sensor 1 After Catalytic Converter - Z29-

- Component location. Refer to
  ⇒ Fig. “" Oxygen Sensor 1 after Catalytic Converter -GX7- -1- ”" , page 283 .
- Removing and installing. Refer to
  ⇒ “8.3 Oxygen Sensor 1 after Catalytic Converter GX7 , Removing and Installing”, page 334 .

4 - Cam Adjustment Actuator

- Only installed on vehicles with the engine codes CNTA, CXCA, CXDA, CXCB
- Cylinder 1 Exhaust Camshaft Adjuster A - N580-
- Cylinder 1 Exhaust Camshaft B - N581-
- Cylinder 2 Exhaust Camshaft Adjuster A - N588-
- Cylinder 2 Exhaust Camshaft B - N589-
- Cylinder 3 Exhaust Camshaft Adjuster A - N596-
- Cylinder 3 Exhaust Camshaft B - N597-
- Cylinder 4 Exhaust Camshaft Adjuster A - N604-
- Cylinder 4 Exhaust Camshaft B - N605-
- Component location. Refer to ⇒ Fig. “"Ignition Coils and Adjusting Elements”" , page 280 .

5 - Oxygen Sensor 1 before Catalytic Converter - GX10-

- Consists of:

  Heated Oxygen Sensor - G39-

Protected by copyright. Copying for private or commercial purposes, in part or in whole, is not permitted unless authorised by Volkswagen AG. Volkswagen AG does not guarantee or accept any liability with respect to the correctness of information in this document. Copyright by Volkswagen AG.

Oxygen Sensor Heater - Z19-

- ❑ Component location. Refer to
  ⇒ Fig. "" Oxygen Sensor 1 before Catalytic Converter -GX10- -1- "" , page 283 .
- ❑ Removing and installing. Refer to
  ⇒ "8.2 Oxygen Sensor 1 before Catalytic Converter GX10 , Removing and Installing", page 333 .

6 - Turbocharger Recirculation Valve - N249- and Charge Pressure Actuator - V465-

- ❑ Components are installed directly on the turbocharger
- ❑ Component location. Refer to ⇒ "1.1 Overview - Turbocharger", page 256 .
- ❑ Removing and installing. Refer to ⇒ "1.1 Overview - Turbocharger", page 256 .

7 - Camshaft Position Sensor 3 - G300-

- ❑ 9 Nm
- ❑ Component location. Refer to ⇒ Fig. ""Ignition Coils and Adjusting Elements"" , page 280 .
- ❑ Removing and installing. Refer to
  ⇒ "1.5.2 Camshaft Position Sensor 3 G300 , Removing and Installing", page 360 .

8 - Brake Lamp Switch - F- and Brake Pedal Switch - F47-

- ❑ Component location. Refer to
  ⇒ Fig. ""Installed Location of the Brake Lamp Switch -F- / Brake Pedal Switch -F63- and Vacuum Sensor -G608- ."" , page 279 .
- ❑ Removing and installing. Refer to ⇒ Brake System; Rep. Gr. 45 ; Component Location Overview .

9 - Connectors

- ❑ For Oxygen Sensor 1 before Catalytic Converter - GX10-
- ❑ For Oxygen Sensor 1 after Catalytic Converter - GX7-
- ❑ Component location. Refer to ⇒ Fig. ""Oxygen Sensors"" , page 283 .

10 - High Pressure Pump with Fuel Pressure Regulator Valve - N276-

- ❑ Component location. Refer to
  ⇒ Fig. ""High Pressure Pump and Camshaft Position Sensor"" , page 282 .
- ❑ High Pressure Pump Assembly Overview. Refer to
  ⇒ "7.1 Overview - High Pressure Pump", page 325 .
- ❑ Removing and installing. Refer to ⇒ "7.2 High Pressure Pump, Removing and Installing", page 328 .

11 - Engine Coolant Temperature Sensor - G62-

- ❑ Component location. Refer to ⇒ "2.3 Overview - Engine Coolant Temperature Sensor", page 228 .
- ❑ Removing and installing. Refer to
  ⇒ "2.10 Engine Coolant Temperature Sensor G62 , Removing and Installing", page 238 .

12 - Engine Control Module - J623-

- ❑ Removing and installing. Refer to
  ⇒ "6.1 Engine Control Module J623 , Removing and Installing", page 321 .

13 - Camshaft Position Sensor - G40-

- ❑ 9 Nm
- ❑ Component location. Refer to ⇒ Fig. ""View from Above"" , page 281 .
- ❑ Removing and installing. Refer to
  ⇒ "1.5.1 Camshaft Position Sensor G40 , Removing and Installing", page 360 .

14 - Channel Separating Plate Vacuum Diaphragm (Intake Manifold Flaps)

- ❑ Component location. Refer to ⇒ Fig. ""Variable Intake Manifold"" , page 281 .

15 - Connector for the Intake Manifold-Fuel Injector

16 - Intake Manifold Runner Control Valve - N316-

- ❑ Component location. Refer to ⇒ Fig. ""Variable Intake Manifold"" , page 281 .

Protected by copyright. Copying for private or commercial purposes, in part or in whole, is not permitted unless authorised by Volkswagen AG. Volkswagen AG does not guarantee or accept any liability with respect to the correctness of information in this document. Copyright by Volkswagen AG.

17 - Engine Speed Sensor - G28-

- 4 Nm + 45°
- Component location. Refer to ⇒ Fig. "" Engine Speed Sensor -G28- -1- "" , page 282 .
- Coat the seal with oil
- Replace screw after removal
- Removing and installing. Refer to ⇒ "1.6 Engine Speed Sensor G28 , Removing and Installing", page 361 .

18 - Connectors for

- Knock Sensor 1 - G61-
- Intake Manifold Runner Control Valve - N316-
- Fuel Pressure Sensor - G247-
- Intake Manifold Runner Position Sensor - G336-
- Camshaft Position Sensor - G40-
- Combustion chambers fuel injectors N30 to N33
- Component location. Refer to ⇒ Fig. ""Connectors"" , page 282 .

19 - Low Fuel Pressure Sensor - G410-

- 15 Nm
- Install the Low Fuel Pressure Sensor - G410- with an adapter
- Component location. Refer to ⇒ Fig. ""View from Above"" , page 281 .
- Removing and installing. Refer to ⇒ "5.4 Low Fuel Pressure Sensor G410 , Removing and Installing", page 318 .

20 - Knock Sensor 1 - G61-

- 20 Nm
- In order to remove, the coolant pump and coolant thermostat must be removed
- Removing and installing. Refer to ⇒ "1.4 Knock Sensor 1 G61 , Removing and Installing", page 359 .

21 - Intake Manifold Sensor - GX9-

- Consists of:

  Intake Air Temperature Sensor - G42-

  Manifold Absolute Pressure Sensor - G71-
- Component location. Refer to ⇒ Fig. ""View from Above"" , page 281 .

22 - Throttle Valve Control Module - GX3-

- Consists of:

  EPC Throttle Drive - G186-

  EPC Throttle Drive Angle Sensor 1 - G187-

Protected by copyright. Copying for private or commercial purposes, in part or on whole, is not permitted unless authorised by Volkswagen AG. Volkswagen AG does not guarantee or accept any liability with respect to the correctness of information in this document. Copyright by Volkswagen AG.

EPC Throttle Drive Angle Sensor 2 - G188-

- After replacing or removing and installing the Throttle Valve Control Module - GX3- must be adapted to the Engine Control Module - J623- . Refer to Vehicle Diagnostic Tester

23 - Ignition Coils with Power Output Stages

- Component location. Refer to ⇒ Fig. ""Ignition Coils and Adjusting Elements"" , page 280 .
- Removing and installing. Refer to
  ⇒ "1.3 Ignition Coils with Power Output Stages, Removing and Installing", page 357 .

24 - Fuel Pressure Sensor - G247-

- 27 Nm
- Component location. Refer to
  ⇒ Fig. ""Fuel Pressure Sensor in the High Pressure System"" , page 281 .
- Removing and installing. Refer to
  ⇒ "5.2 Fuel Pressure Sensor G247 , Removing and Installing", page 314 .

25 - EVAP Canister Purge Regulator Valve 1 - N80-

- Component location. Refer to ⇒ Fig. ""Ignition Coils and Adjusting Elements"" , page 280 .

26 - Intake Manifold Runner Position Sensor - G336-

- Component location. Refer to
  ⇒ Fig. "" Intake Manifold Runner Position Sensor -G336- -1- "" , page 282 .

27 - Engine Coolant Temperature Sensor on Radiator Outlet - G83-

- Component location. Refer to ⇒ "2.3 Overview - Engine Coolant Temperature Sensor", page 228 .
- Removing and installing. Refer to
  ⇒ "2.11 Engine Coolant Temperature Sensor on Radiator Outlet G83 , Removing and Installing", page 239 .

28 - Charge Air Pressure Sensor - G31-

- Component location. Refer to ⇒ "2.1 Overview - Charge Air System", page 264 .
- Removing and installing. Refer to
  ⇒ "2.4 Charge Air Pressure Sensor G31 , Removing and Installing", page 269 .

29 - Oil Pressure Regulation Valve - N428-

- Component location. Refer to
  ⇒ "4.2 Overview - Oil Pressure Switch/Oil Pressure Regulator Valve", page 198 .
- Removing and installing. Refer to
  ⇒ "4.8 Oil Pressure Regulation Valve N428 , Removing and Installing", page 206 .

30 - Oil Pressure Switch - F22- , Reduced Oil Pressure Switch - F378- and Piston Cooling Nozzle Control Valve - N522-

- Component location. Refer to
  ⇒ "4.2 Overview - Oil Pressure Switch/Oil Pressure Regulator Valve", page 198 .
- Checking. Refer to Vehicle Diagnostic Tester
- Removing and installing. Refer to
  ⇒ "4.2 Overview - Oil Pressure Switch/Oil Pressure Regulator Valve", page 198 .

A - Fuel Injector, Direct Fuel Injection

- Component location. Refer to ⇒ Fig. ""Combustion Chambers Fuel Injectors"" , page 280 .
- Cylinder 1 Fuel Injector - N30-
- Cylinder 2 Fuel Injector - N31-
- Cylinder 3 Fuel Injector - N32-
- Cylinder 4 Fuel Injector - N33-
- Removing and installing. Refer to ⇒ "2.2 Fuel Injectors, Removing and Installing", page 285 .

B - Fuel Injector, Intake-Manifold Fuel Injection

- ❑ Only installed on vehicles with the engine codes CXDA and CHHB
- ❑ Component location. Refer to ⇒ Fig. ""Intake Manifold Fuel Injectors"" , page 281 .
- ❑ Cylinder 1 Fuel Injector 2 - N532-
- ❑ Cylinder 2 Fuel Injector 2 - N533-
- ❑ Cylinder 3 Fuel Injector 2 - N534-
- ❑ Cylinder 4 Fuel Injector 2 - N535-
- ❑ Removing and installing. Refer to ⇒ "2.3 Intake Manifold-Fuel Injectors, Removing and Installing", page 287 .

C - Fuel Pump Control Module - J538-

- ❑ Component location. Refer to ⇒ Fig. "" Fuel Pump Control Module -J538- -1- "" , page 280 .
- ❑ Removing and installing. Refer to ⇒ Fuel Supply System; Rep. Gr. 20 ; Fuel Pump; Fuel Pump Control Module - J538- , Removing and Installing .

D - Clutch Position Sensor - G476-

- ❑ Only on vehicles with a manual transmission
- ❑ Component location. Refer to ⇒ Fig. "" Clutch Position Sensor -G476- -2- "" , page 279 .

E - Accelerator Pedal Module - GX2-

- ❑ Consists of:

  Accelerator Pedal Position Sensor - G79-

  Accelerator Pedal Position Sensor 2 - G185-
- ❑ Component location. Refer to ⇒ Fig. "" Accelerator Pedal Module -GX2- "" , page 279 .
- ❑ Removing and installing. Refer to ⇒ Fuel Supply System; Rep. Gr. 20 ; Accelerator Pedal Mechanism; Overview - Accelerator Pedal Mechanism .

F - Coolant Fan Control Module - J293-

- ❑ Installed inside the coolant fan

G - Oil Pressure Switch, Level 3 - F447-

- ❑ Component location. Refer to ⇒ "4.2 Overview - Oil Pressure Switch/Oil Pressure Regulator Valve", page 198 .
- ❑ Checking and removing and installing. Refer to ⇒ "4.4 Reduced Oil Pressure Switch F378 , Removing and Installing", page 200 .

H - Left Electrohydraulic Engine Mount Solenoid Valve - N144- and Right Electrohydraulic Engine Mount Solenoid Valve - N145-

- ❑ Not installed in all vehicles (depends on the transmission)

Protected by copyright. Copying for private or commercial purposes, in part or in whole, is not permitted unless authorised by Volkswagen AG. Volkswagen AG does not guarantee or accept any liability with respect to the correctness of information in this document. Copyright by Volkswagen AG.

Protected by copyright. Copying for private or commercial purposes, in part or in whole, is not permitted unless authorised by Volkswagen AG. Volkswagen AG does not guarantee or accept any liability with respect to the correctness of information in this document. Copyright by Volkswagen AG.

Accelerator Pedal Module - GX2-

2 - Accelerator Pedal Module Connector

Installed Location of the Brake Lamp Switch - F- / Brake Pedal Switch - F63- and Vacuum Sensor - G608- .

1 - Brake Lamp Switch - F- / Brake Pedal Switch - F63-

2 - Vacuum Sensor - G608-

♦ In the engine compartment on the brake booster.

Clutch Position Sensor - G476- -2-

- On the clutch pedal bracket -arrow-.

Removing and installing. Refer to ⇒ Manual Transmission; Rep. Gr. 30 ; Clutch Mechanism; Clutch Pedal, Removing and Installing .

Fuel Pump Control Module - J538- -1-

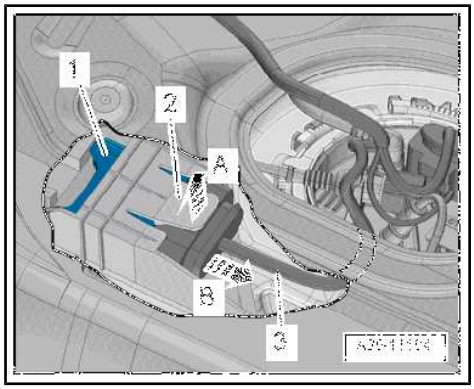

Ignition Coils and Adjusting Elements

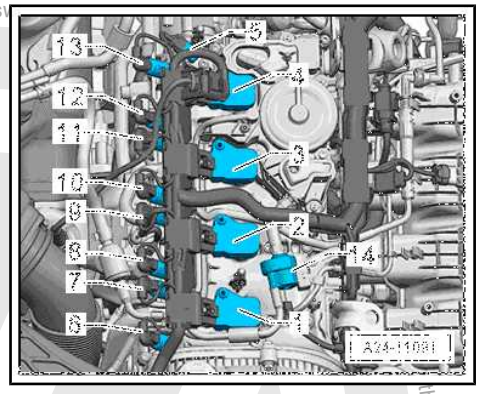

1 - Ignition Coil 1 with Power Output Stage - N70-

2 - Ignition Coil 2 with Power Output Stage - N127-

3 - Ignition Coil 3 with Power Output Stage - N291-

4 - Ignition Coil 4 with Power Output Stage - N292-

5 - Camshaft Position Sensor 3 - G300-

6 - Cylinder 1 Exhaust Camshaft B - N581- only installed on vehicles with the engine codes CHHB,CNTA, CXCA CXDA CXCB

7 - Cylinder 1 Exhaust Camshaft Adjuster A - N580- only installed on vehicles with the engine codes CHHB, CNTA, CXCA CXDA CXCB

8 - Cylinder 2 Exhaust Camshaft Adjuster A - N588- only installed on vehicles with the engine codes CHHB, CNTA, CXCA, CXDA, CXCB

9 - Cylinder 2 Exhaust Camshaft B - N589- only installed on vehicles with the engine codes CHHB, CNTA, CXCA, CXDA, CXCB

10 - Cylinder 3 Exhaust Camshaft B - N597- only installed on vehicles with the engine codes CHHB, CNTA, CXCA, CXDA, CXCB

11 - Cylinder 3 Exhaust Camshaft Adjuster A - N596- only installed on vehicles with the engine codes CHHB, CNTA, CXCA, CXDA, CXCB

12 - Cylinder 4 Exhaust Camshaft Adjuster A - N604- only installed on vehicles with the engine codes CHHB, CNTA, CXCA, CXDA,CXCB

13 - Cylinder 4 Exhaust Camshaft B - N605- only installed on vehicles with the engine codes CHHB, CNTA, CXCA , CXDA, CXCB

14 - EVAP Canister Purge Regulator Valve 1 - N80-

Combustion Chambers Fuel Injectors

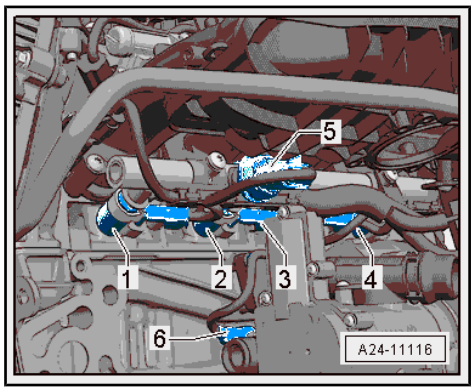

1 - Cylinder 1 Fuel Injector - N30-

2 - Cylinder 2 Fuel Injector - N31-

3 - Cylinder 3 Fuel Injector - N32-

4 - Cylinder 4 Fuel Injector - N33-

5 - Fuel Pressure Sensor - G247-

6 - Knock Sensor 1 - G61-

Protected by copyright. Copying for private or commercial purposes, in part or in whole, is not permitted unless authorised by Volkswagen AG. Volkswagen AG does not guarantee or accept any liability with respect to the correctness of information in this document. Copyright by Volkswagen AG.

Intake Manifold Fuel Injectors

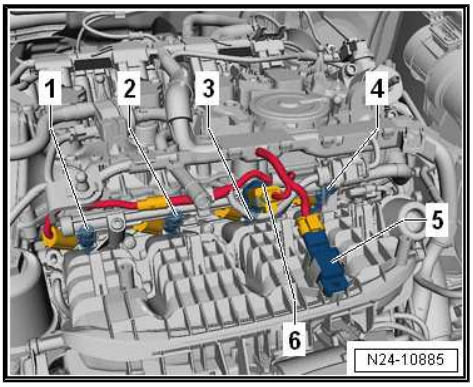

1 - Cylinder 1 Fuel Injector 2 - N532- only installed on vehicles with the engine codes CXDA and CHHB

2 - Cylinder 2 Fuel Injector 2 - N533- only installed on vehicles with the engine codes CXDA and CHHB

3 - Cylinder 3 Fuel Injector 2 - N534- only installed on vehicles with the engine codes CXDA and CHHB

4 - Cylinder 4 Fuel Injector 2 - N535- only installed on vehicles with the engine codes CXDA and CHHB

5 - Intake Manifold Sensor - GX9-

6 - Low Fuel Pressure Sensor - G410-

View from Above

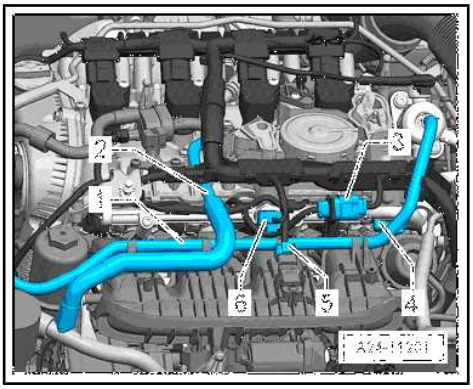

1 - Fuel supply line

2 - Coolant line

3 - Connector for the intake manifold-fuel Injector, only installed on vehicles with the engine codes CXDA and CHHB

4 - Camshaft Position Sensor - G40-

5 - Intake Manifold Sensor - GX9- , only installed on vehicles with the engine codes CXDA and CHHB

6 - Low Fuel Pressure Sensor - G410- , only installed on vehicles with the engine codes CXDA and CHHB

Fuel Pressure Sensor in the High Pressure System

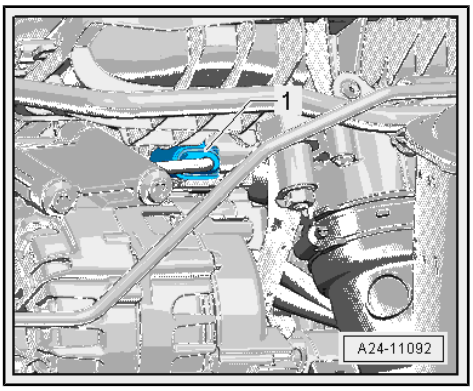

1 - Fuel Pressure Sensor - G247-

Variable Intake Manifold

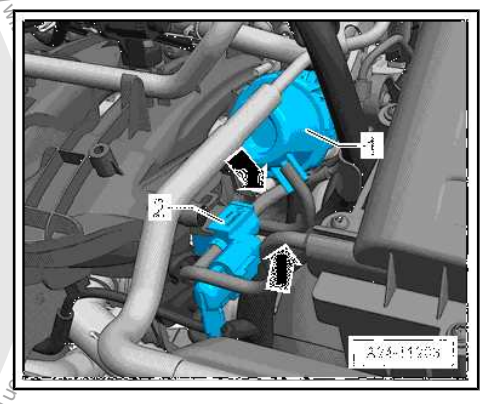

1 - Channel separating plate vacuum diaphragm (intake manifold flaps)

2 - Intake Manifold Runner Control Valve - N316-

Protected by copyright. Copying for private or commercial purposes, in part or in whole, is not permitted unless authorised by Volkswagen AG. Volkswagen AG does not guarantee or accept any liability with respect to the correctness of information in this document. Copyright by Volkswagen AG.

Intake Manifold Runner Position Sensor - G336- -1-

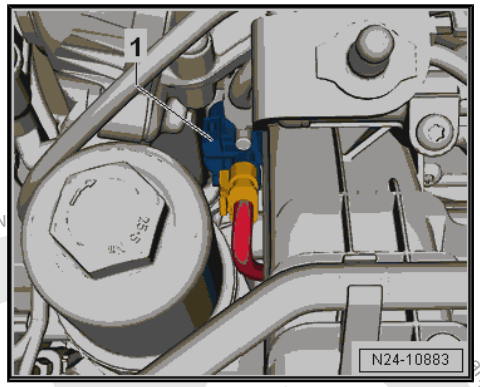

Connectors

1 - For combustion chambers fuel injectors

2 - For Knock Sensor 1 - G61-

3 - For Oil Pressure Switch, Level 3 - F447-

4 - For Intake Manifold Runner Control Valve - N316- , Fuel Pressure Sensor - G247- , Intake Manifold Runner Position Sensor - G336- , Engine Coolant Temperature Sensor - G62- , Camshaft Position Sensor - G40-

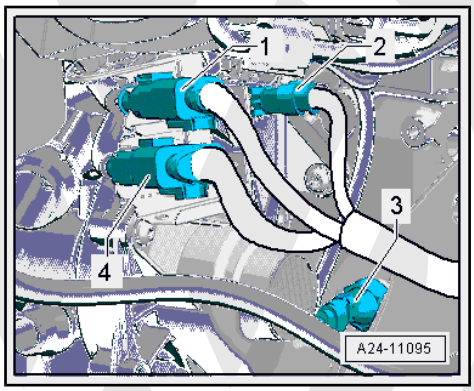

High Pressure Pump and Camshaft Position Sensor

1 - Camshaft Position Sensor 3 - G300-

2 - Fuel Pressure Regulator Valve - N276-

3 - Fuel line to the intake manifold-fuel injector fuel rail, only installed on vehicles with the engine codes CXDA and CHHB

4 - High pressure line to the direct fuel injection fuel rail

5 - Fuel supply line from the fuel tank

Pfeile - Bolts

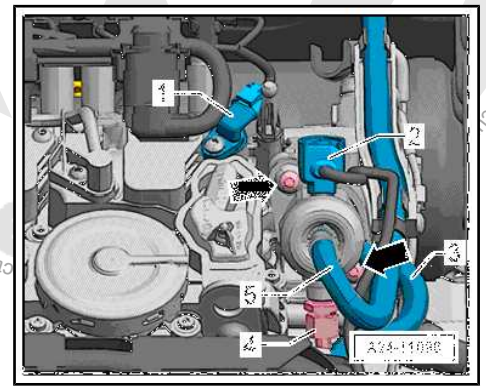

Engine Speed Sensor - G28- -1-

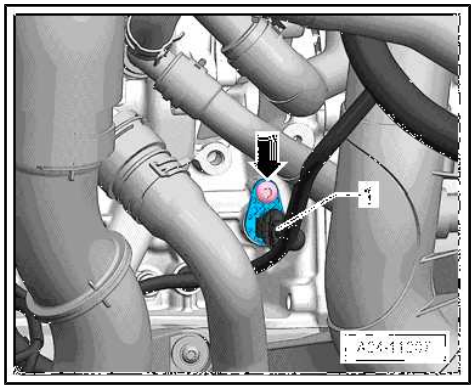

ted by copyright. Copy for private or commercial purposes, in part or in whole, is not permitted unless authorised by Volksw
any liability with respect to the correctness of information in this doc

Oxygen Sensors

1 - Oxygen Sensor 1 after Catalytic Converter - GX7- connector

2 - Oxygen Sensor 1 before Catalytic Converter - GX10- connector

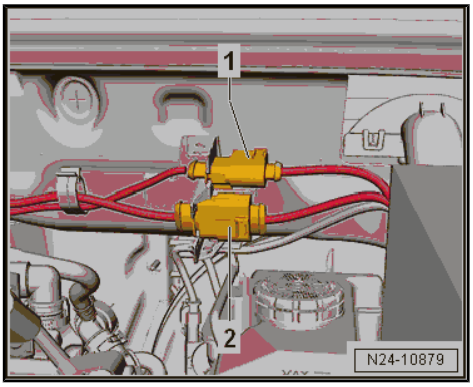

Oxygen Sensor 1 before Catalytic Converter - GX10- -1-

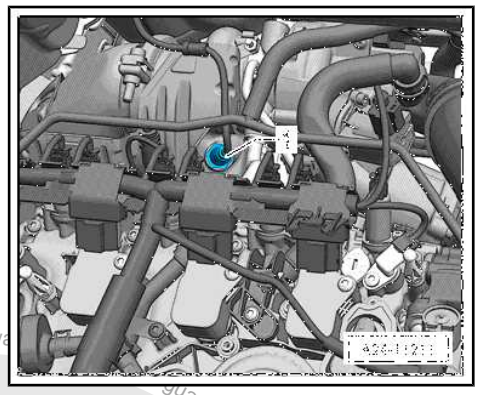

Oxygen Sensor 1 after Catalytic Converter - GX7- -1-

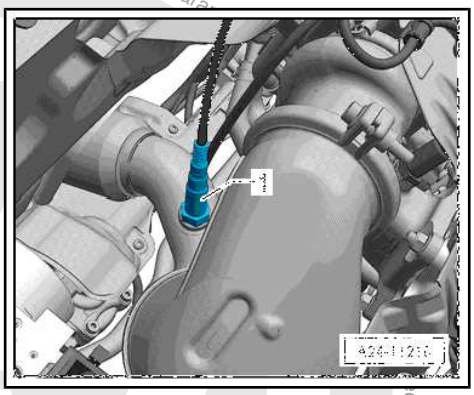

1.2 High Fuel Pressure, Reducing

CAUTION

Fuel system is under high pressure.
Risk of injury from fuel spraying out.
– Reducing the fuel high pressure.

High Fuel Pressure, Reducing

– Turn on the ignition and select the following menu items on the Vehicle Diagnostic Tester :

◆ `01 - Engine Electronics`

◆ `Guided Functions`

◆ `01 - Removing Fuel High Pressure`

• The fuel pressure reduces to a specified value.

– Switch off the ignition.

Protected by copyright. Copying for private or commercial purposes, in part or in whole, is not permitted unless authorised by Volkswagen AG. Volkswagen AG does not guarantee the accuracy and completeness of information in this document. Copyright by Volkswagen AG.

The fuel rail will continue to be filled with fuel, but it will no longer be under high pressure.

CAUTION

Fuel system is under pressure.

Risk of injury from fuel spraying out.

- **Wear protective eyewear.**
- **Wear safety gloves.**
- **Reduce the pressure: Lay clean cloths around the connection location and carefully open the connection point.**

- After reducing fuel high pressure, place a clean cloth around the connection and open the high pressure system »immediately«. Collect any draining fuel.

Note

- *If the high pressure system is not opened immediately, the pressure will increase because of post-heating.*
- *The ignition can no longer be switched on, otherwise the pressure will increase again.*

Protected by copyright. Copying for private or commercial purposes, in part or in whole, is not permitted unless authorised by Volkswagen AG. Volkswagen AG does not guarantee or accept any liability with respect to the correctness of information in this document. Copyright by Volkswagen AG.

2 Fuel Injectors

⇒ “2.1 Overview - Fuel Injector”, page 285

⇒ “2.2 Fuel Injectors, Removing and Installing”, page 285

⇒ “2.4 Fuel Injector Seals, Replacing”, page 288

⇒ “2.5 Fuel Injectors, Cleaning”, page 291

2.1 Overview - Fuel Injector

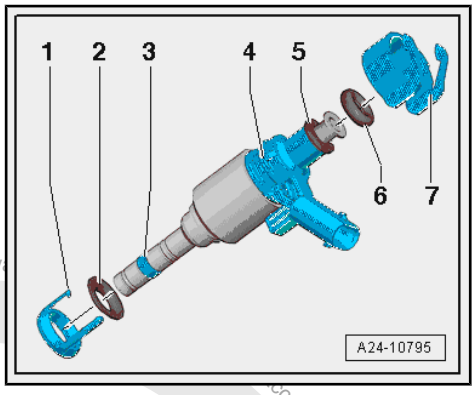

1 - Replace intermediate ring

2 - Replace the mount

3 - Combustion chamber sealing ring (Teflon® sealing ring), replace, the ring must not be greased or handled with any other lubricants when installing.

4 - Fuel Injector

5 - Replace the spacer ring

6 - Replace the O-ring (lightly coat with clean engine oil during installation)

7 - Replace the support ring (via this support ring, fuel rail utilizes the force to hold the fuel injector in place in the cylinder head).

2.2 Fuel Injectors, Removing and Installing

Special tools and workshop equipment required

- Injector/Combustion Chamber Seal Tool Set - T10133C-
- Injector/Combustion Chamber Seal Tool Set - 18 - T10133/18-
- Puller - T10133/2A-
- Removal Tool Injector/Combustion Chamber Seal Tool Set - 16A - T10133/16A-

Caution

This procedure contains mandatory replaceable parts. Refer to component overview prior to starting procedure.

Mandatory Replacement Parts

- Mount - Fuel Injector
- O-ring - Fuel Injector
- Ring - Intermediate Fuel Injector
- Ring - Sealing Combustion Chamber
- Ring - Spacer
- Ring - Support

Removing

Note

The fuel injectors can only be removed when the engine is cold.

– Remove the intake manifold. Refer to ⇒ “4.3 Intake Manifold, Removing and Installing”, page 304 .

Protected by copyright. Copyright by Volkswagen AG. Copying for private or commercial purposes, in part or in whole, is not permitted unless authorised by Volkswagen AG. Volkswagen AG does not accept any liability with respect to the correctness of information in this document.

Protected by copyright. Copying for private or commercial purposes, in part or in whole, is not permitted unless authorised by Volkswagen AG. Volkswagen AG does not guarantee or accept any liability with respect to the correctness of information in this document.

– Remove the fuel rail. Refer to ⇒ “4.4 Fuel Rail, Removing and Installing, Direct Fuel Injection”, page 309 .

Removing Fuel Injectors, in the Event That They Are Stuck in the Fuel Rail

Carefully remove the fuel injectors out of the fuel rail.

Removing Fuel Injectors, in the Event That They Are Stuck in the Cylinder Head

– Cover the open intake channels with a clean cloth.

– Remove the electrical connector on the fuel injector that is about to be removed.

– Push the Injector/Combustion Chamber Seal Tool Set - 18 - T10133/18- over the fuel injector.

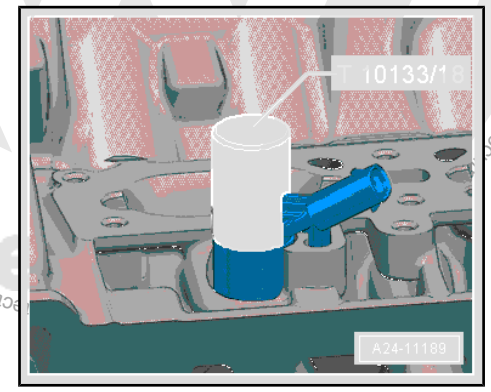

– Carefully hit the sleeve to loosen the fuel injector.

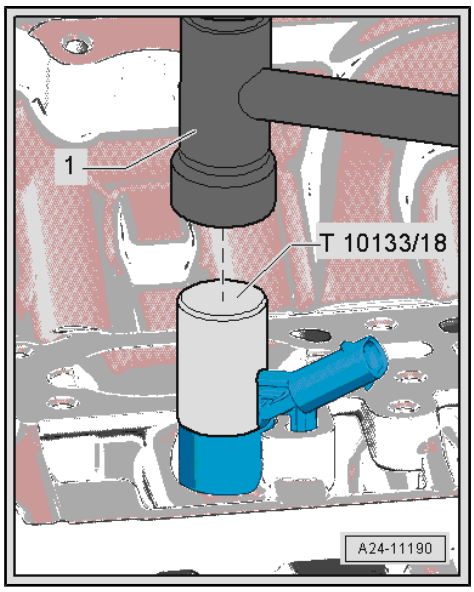

– Guide the Puller - T10133/2A- in the groove on the fuel injector.

– Install the Removal Tool Injector/Combustion Chamber Seal Tool Set - 16A - T10133/16A- .

– Remove the fuel injector by using the torque wrench -1- to turn the bolt.

– If the tightening specification limit of »5 Nm« is achieved without the fuel injector loosening, remove the puller and loosen the fuel injector with the sleeve.

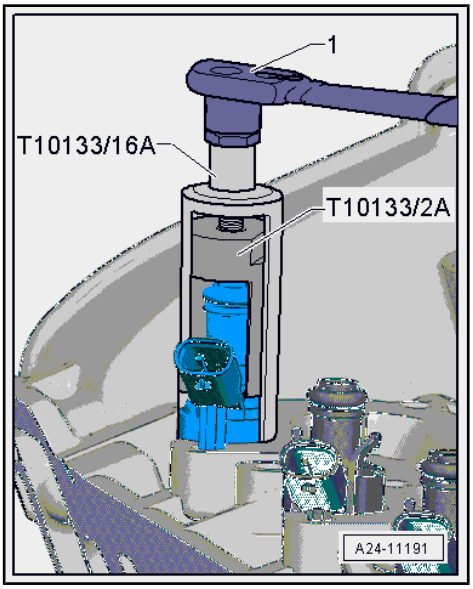

Note

- *The fuel injectors may be damaged if the tightening specifications are not observed.*
- *The combustion chamber seal must always be replaced before installing the fuel injector. Refer to* *⇒ "2.4 Fuel Injector Seals, Replacing", page 288* .

– Replace combustion chamber seal and install fuel injector. Refer to ⇒ "2.4 Fuel Injector Seals, Replacing", page 288 .

2.3 Intake Manifold-Fuel Injectors, Removing and Installing

Note

Vehicles with the engine codes CNTA do not have an intake manifold-fuel injector.

Removing

– Remove the fuel return hose -1- from the intake manifold.

– Disconnect the connectors -3- from the mount.

– Disconnect the connectors -4 and 5-.

– Free up the wiring harness -1- from the fuel rail.

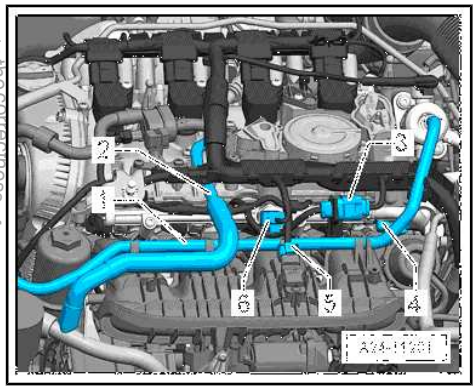

Protected by copyright. Copyright for private or commercial purposes, in part or in whole, is not permitted unless authorised by Volkswagen AG. Volkswagen AG does not guarantee or accept any liability with respect to the correctness of information in this document. Copyright by Volkswagen AG.

– Remove bolts -arrows- from the fuel rail.
– Carefully remove the fuel rail and fuel injector upward.
– Disconnect the connectors on the fuel injectors.

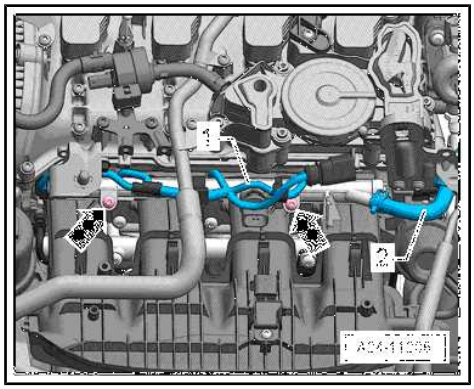

Overview - Fuel Injector

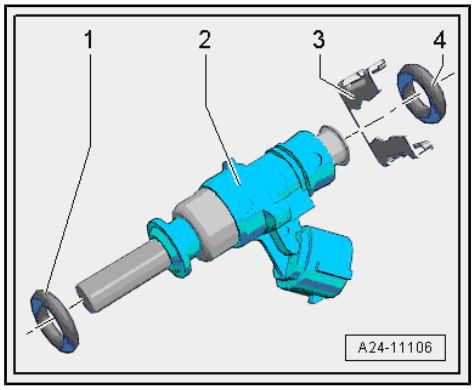

1 - Replace the O-ring (lightly coat with clean engine oil during installation)

2 - Fuel Injector

3 - Clip

4 - Replace the O-ring (lightly coat with clean engine oil during installation)

Installing

– Replace the O-ring on the fuel injector.
– Coat the O-rings with clean engine oil before installing.
– Connect the connectors on the fuel injectors.
– Press the fuel rail and the fuel injector by hand all the way into the opening for the intake manifold (oil and grease free).
– Install in reverse order of removal.
– Install the fuel rail.

Tightening Specifications

♦ Refer to
⇒ “4.2.2 Overview - Intake Manifold Lower Section with Fuel Rail, Multiport Fuel Injection”, page 302

2.4 Fuel Injector Seals, Replacing

Special tools and workshop equipment required

♦ Injector/Combustion Chamber Seal Tool Set - Puller - T10133/2A-
♦ Injector/Combustion Chamber Seal Tool Set - Sliding Hammer - T10133/3-
♦ Injector/Combustion Chamber Seal Tool Set - Nylon Brush - T10133/4-
♦ Injector/Combustion Chamber Seal Tool Set - Assembly Cone - T10133/5-
♦ Injector/Combustion Chamber Seal Tool Set - Assembly Sleeve - T10133/6-
♦ Injector/Combustion Chamber Seal Tool Set - Assembly Calibration Sleeve - T10133/7- njector/Combustion Chamber Seal Tool Set - Assembly Calibration Sleeve - T10133/8-

Protected by copyright. Copying for private or commercial purposes, in part or in whole, is not permitted unless authorised by Volkswagen AG. Volkswagen AG does not guarantee or accept any liability with respect to the correctness of information in this document. Copyright by Volkswagen AG.

Caution

This procedure contains mandatory replaceable parts. Refer to component overview prior to starting procedure.

Mandatory Replacement Parts

- Mount - Fuel Injector
- O-ring - Fuel Injector
- Ring - Intermediate Fuel Injector
- Ring - Sealing Combustion Chamber
- Ring - Spacer
- Ring - Support

Note

The combustion chamber seal (Teflon® seal) must always be replaced before reinstalling the fuel injector.

– Remove the combustion chamber seal -3- with the appropriate tool (for example with cut the seal open with a razor and spread seal open with a small screwdriver and pull it forward and off.) When doing this, make sure not to damage the groove and circumferential rib in the groove base.

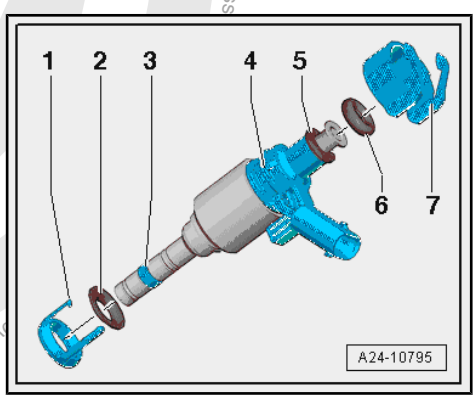

Note

If the groove was damaged, the fuel injector must be replaced.

– Clean off any combustion residue on the seal groove and on the shaft of the fuel injector with a clean cloth before installing the new combustion chamber seal.

– Place the Injector/Combustion Chamber Seal Tool Set Assembly Cone - T10133/5- with a new combustion chamber seal -1- onto the fuel injector -2-.

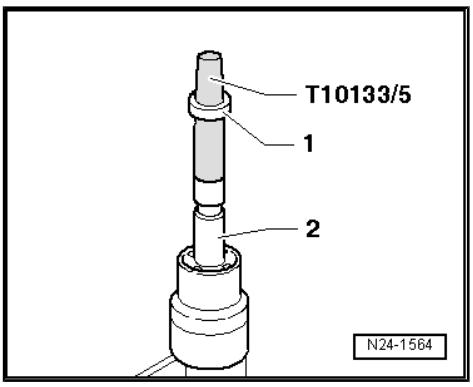

Copyright © 2015 Volkswagen AG. Volkswagen AG does not guarantee or accept any liability with respect to the correctness of information in this document. Copying for private or commercial purposes, in part or in whole, is not permitted unless authorised by Volkswagen AG.

– Slide the combustion chamber seal with the Injector/Combustion Chamber Seal Tool Set Assembly Sleeve - T10133/6- onto the Injector/Combustion Chamber Seal Tool Set Assembly Cone - T10133/5- as far as possible.

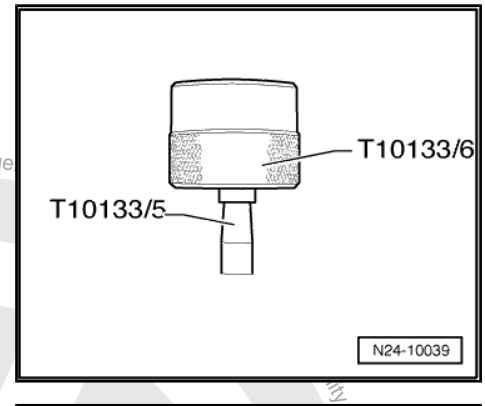

– Rotate the Injector/Combustion Chamber Seal Tool Set Assembly Sleeve - T10133/6- and slide the combustion chamber seal all the way onto the Injector/Combustion Chamber Seal Tool Set Assembly Cone - T10133/5- .

– Remove the Injector/Combustion Chamber Seal Tool Set - Assembly Cone - T10133/5- . Slide the combustion chamber seal to the seal groove using the Injector/Combustion Chamber Seal Tool Set Assembly Sleeve - T10133/6- .

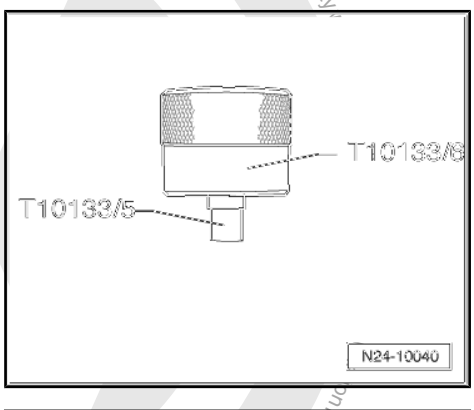

– Press the Calibration Sleeve - T10133/7- with a gentle turning movement (approximately 180°) all the way onto the fuel injector.

– Pull off Calibration Sleeve - T10133/7- again using turning motion in opposite direction.

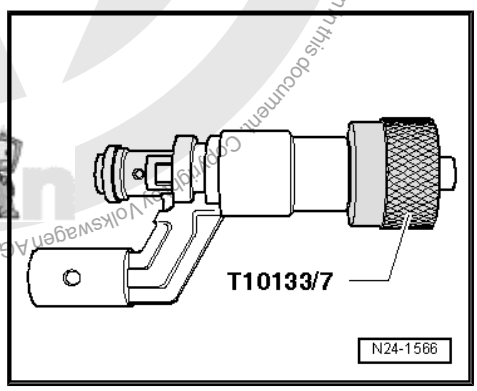

– Press the Calibration Sleeve - T10133/8- with a gentle turning movement (approximately 180°) all the way onto the fuel injector.

– Pull off Calibration Sleeve - T10133/8- again using turning motion in opposite direction.

– Replace the O-ring on the fuel injector and coat with clean oil before installing.

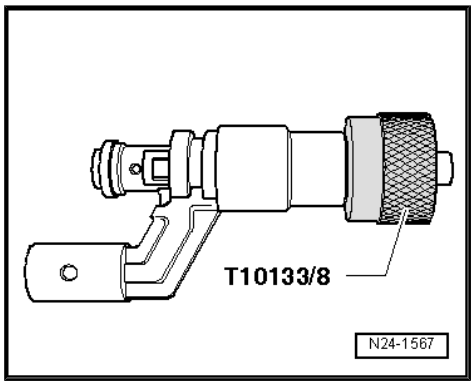

Protected by copyright. Copying for private or commercial purposes, in part or in whole, is not permitted unless authorised by Volkswagen AG. Volkswagen AG does not guarantee or accept any liability with respect to the correctness and completeness of this document. Copyright by Volkswagen AG.

– Use the included Injector/Combustion Chamber Seal Tool Set Nylon Brush - T10133/4- to thoroughly clean the high-pressure fuel injector bores in the cylinder head before installing the fuel injectors.

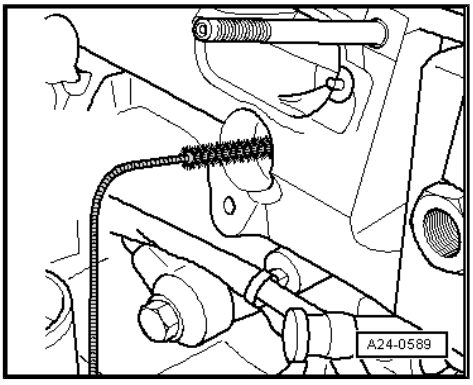

Note

- *Do not oil or grease the combustion chamber sealing ring on the fuel injector.*
- *When installing the injector valve, make sure there is no cleaning product or oil in the holes in the cylinder head.*

– Press fuel injector by hand into cylinder head (free of oil and grease) as far as stop. Make sure the fuel injectors are positioned correctly inside the cylinder head.

– The tab -1- and the opening -arrow- must be on top of each other in the cylinder head.

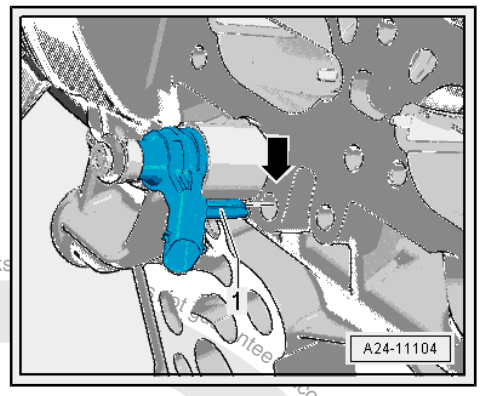

Note

- *The fuel injector must not be difficult to install. If necessary, wait as the combustion chamber seal continues to pull itself together.*
- *Make sure the fuel injectors are installed securely in the cylinder head.*
- *If it is difficult to install the fuel injector by hand, use the Injector/Combustion Chamber Seal Tool Set - Puller - T10133/2A--2- with the Sliding Hammer - T10133/3- to guide in the fuel injector.*

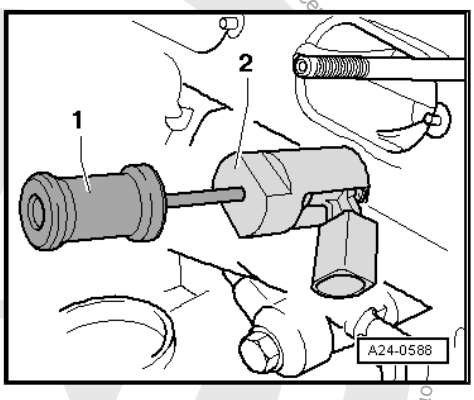

– Coat the fuel injectors O-rings with clean engine oil so they are easier to guide into the fuel rail.

– Install the fuel rail. Refer to ⇒ “4.4 Fuel Rail, Removing and Installing, Direct Fuel Injection”, page 309 .

– Install the intake manifold. Refer to ⇒ “4.3 Intake Manifold, Removing and Installing”, page 304 .

2.5 Fuel Injectors, Cleaning

Special tools and workshop equipment required

- Ultrasonic Cleaning Unit - VAS6418-
- Mounting Plate for Injection Modules - VAS6418/1-
- Cleaning Fluid - VAS6418/2-

Protected by copyright. Copying for private or commercial purposes, in part or in whole, is not permitted unless authorised by Volkswagen AG. Volks
Copyright by Volkswagen AG.

Note

- *Fill the ultrasonic device up to the upper edge of the holes with cleaner (see the magnified area of the illustration).*
- *Observe the safety precautions and the operating instructions for the ultrasonic device.*

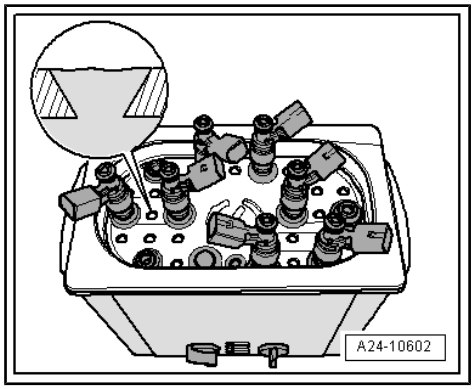

Cleaning

– Remove the fuel injectors. Refer to ⇒ “2.2 Fuel Injectors, Removing and Installing”, page 285 .

– The ultrasonic device must be filled with cleaning fluid.

– Install the combustion chamber fuel injectors -1- all the way into the Mounting Plate for Injection Modules - VAS6418/1- -2-.

– Dip the combustion chamber fuel injectors into the cleaner with the Mounting Plate for Injection Modules - VAS6418/1- .

– Set the temperature control -4- to 50 °C (122 °F).

– Set the time control -5- to 30 minutes.

– Turn on the ultrasonic device -3-.

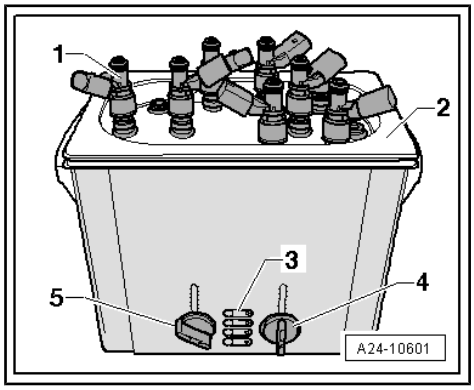

Note

The time begins counting down once the cleaning temperature reaches 50 degrees.

– Always replace the combustion chamber seal (Teflon seal) after cleaning each combustion chamber fuel injector. Refer to ⇒ “2.4 Fuel Injector Seals, Replacing”, page 288 .

– Install the combustion chamber fuel injectors. Refer to ⇒ “2.2 Fuel Injectors, Removing and Installing”, page 285 .

Protected by copyright. Copying for private or commercial purposes, in part or in whole, is not permitted unless authorised by Volkswagen AG. Volkswagen AG does not guarantee or accept any liability with respect to the correctness of information in this document. Copyright by Volkswagen AG.

3 Air Filter

⇒ “3.1 Overview - Air Filter Housing”, page 293 .

⇒ “3.2 Air Filter Housing, Removing and Installing”, page 294 .

3.1 Overview - Air Filter Housing

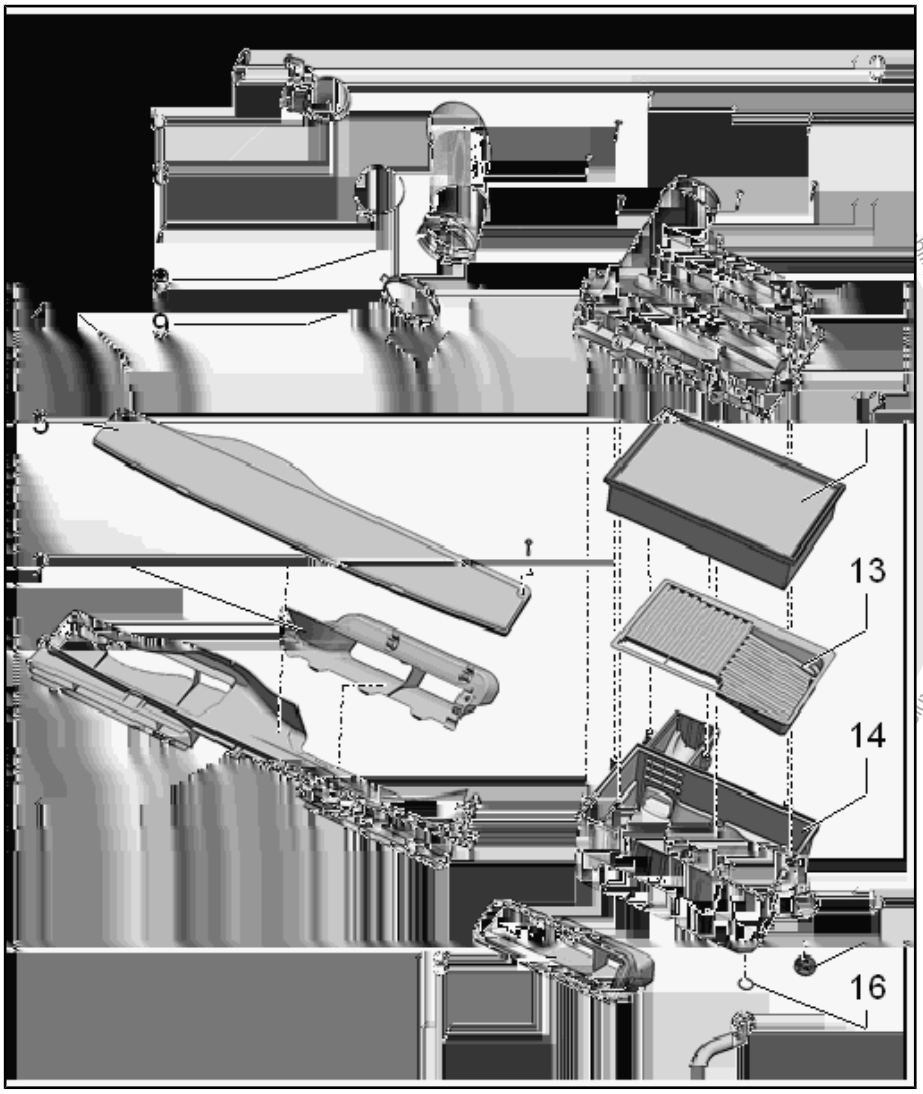

1 - Air Guide- Lower Section

- ❑ On the lock carrier

2 - Air Guide- Upper Section

- ❑ On the lock carrier

3 - Cover

- ❑ For the air guide

4 - Bolt

- ❑ 2 Nm

5 - Seal

6 - Air Guide Hose

7 - Screw-Type Clamp

8 - Air Guide Hose

9 - Spring Clamp

10 - Bolts

- ❑ 1.5 Nm

11 - Air Filter Housing Upper Section

- ❑ Clean off dirt, leaves and salt residue

12 - Air Filter

- ❑ Use the original-air filter element. Refer to the Parts Catalog.
- ❑ For the change intervals. Refer to the ⇒ Maintenance ; Booklet 36.1 ; Service Work; Service Tables .
- ❑ Removing and installing. Refer to ⇒ Maintenance ; Booklet 36.1 ; Procedure Descriptions; Air Filter, Cleaning Housing and Replacing Filter .

13 - Insert

- ❑ For the air filter lower section

14 - Air Filter Housing Lower Section

- ❑ Clean off dirt, leaves and salt residue

15 - Rubber Buffer

16 - O-Ring

- ❑ Replace if damaged

17 - Water Drain Hose

- ❑ With valve
- ❑ Clean

bility with respect to the correctness of information in th

18 - Air Guide

❑ On the air filter housing lower section

3.2 Air Filter Housing, Removing and Installing

Removing

– Remove the bolts -1 and 3-.

– Open the lock in direction of -arrow- and remove the cover -2-.

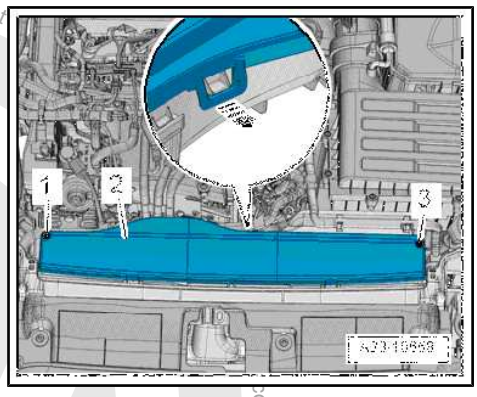

– Free up the coolant hose -2-.

– Release the locking mechanism in direction of -arrows- and remove the air guide upper section -1-.

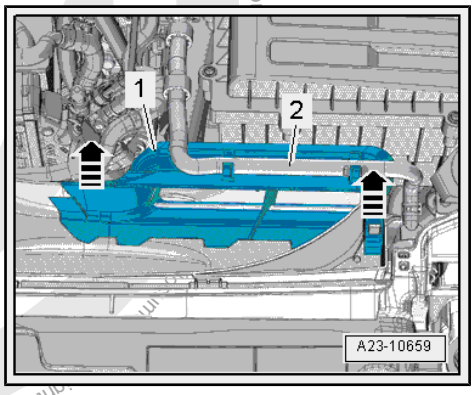

Protected by copyright. Copying for private or commercial purposes, in part or in whole, is not permitted unless authorised by Volkswagen AG. Volkswagen AG does not

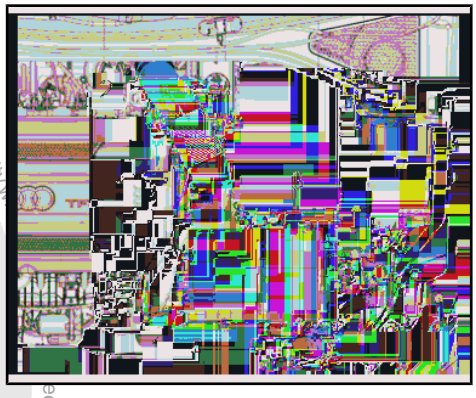

– Disconnect the vacuum hose -1-.
– Loosen the clamp -2- and remove the air guide hose.
– Carefully remove the air filter housing -3-.

Installing

Note

- *Use silicone-free lubricant to mount the air guide hose.*
- *Secure hose connections with standard production clamps. Refer to the Parts Catalog.*

– Check the air guide hose (clean air side) for salt residue, dirt and leaves.
– Check intake channels up to the air filter insert for dirt.
– Install the air filter housing.

Note

The water drain hose must be routed straight down and without any bends.

Protected by copyright. Copyright by Volkswagen AG.

4 Intake Manifold

⇒ “4.1 Overview - Intake Manifold”, page 296 .

⇒ “4.2 Overview - Intake Manifold Lower Section with Fuel Rail”, page 300

⇒ “4.3 Intake Manifold, Removing and Installing”, page 304 .

⇒ “4.4 Fuel Rail, Removing and Installing, Direct Fuel Injection”, page 309 .

⇒ “4.5 Throttle Valve Control Module GX3 , Removing and Installing”, page 309 .

⇒ “4.6 Throttle Valve Control Module, Cleaning”, page 311 .

4.1 Overview - Intake Manifold

⇒ “4.1.1 Overview - Intake Manifold, without Intake-Manifold Fuel Injection”, page 296 .

4.1.1 Overview - Intake Manifold, without Intake-Manifold Fuel Injection

1 - Intake Manifold

- ❑ Removing and installing. Refer to ⇒ “4.3 Intake Manifold, Removing and Installing”, page 304 .

2 - Intake Manifold Runner Position Sensor - G336-

- ❑ The Intake Manifold Runner Position Sensor - G336- needs to be adapted to the Engine Control Module - J623- each time the sensor is removed and installed or replaced. See “Guided Functions”; to do so, use a Vehicle Diagnostic Tester .

3 - Bolt

- ❑ 5 Nm
- ❑ Intake Air Temperature

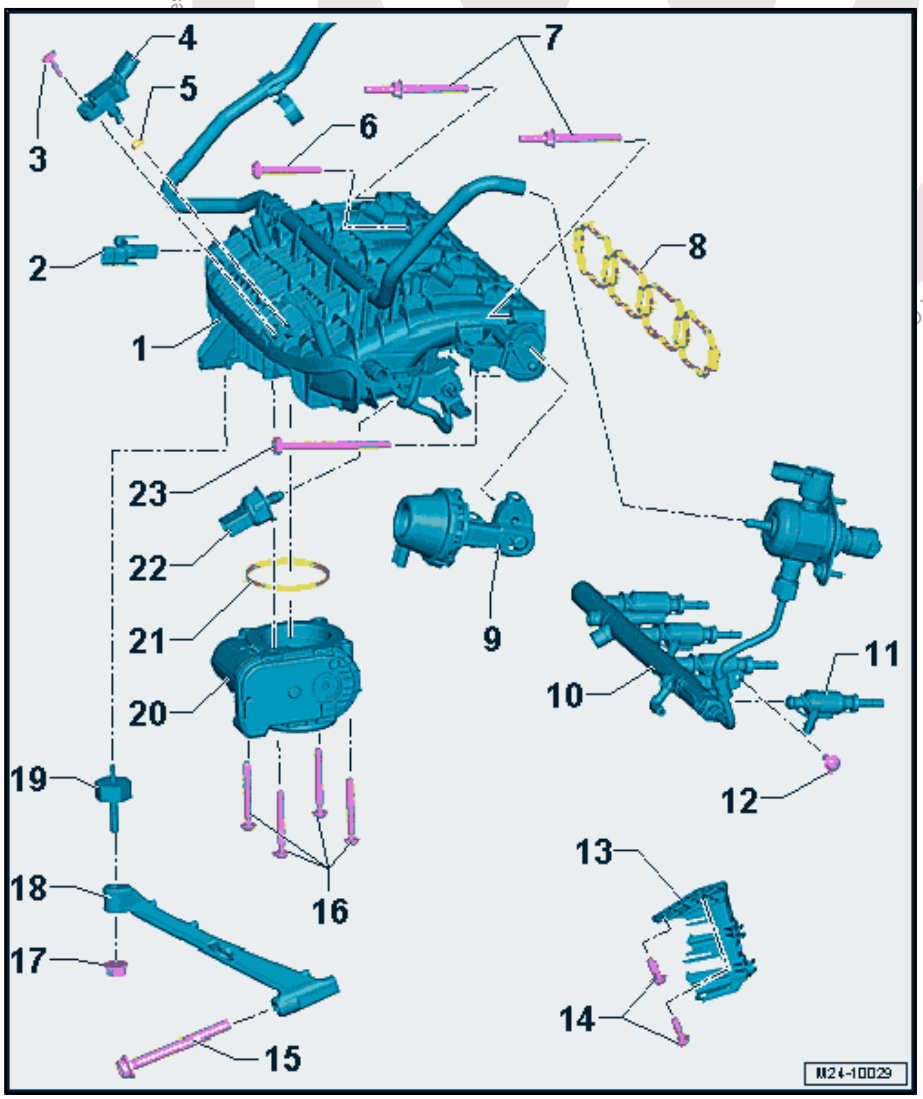

es, in part or in whole, is not permitted unless authorised by Volkswagen AG. Volkswagen AG does not guarantee or accept any liability with respect to the correctness of information in this document.

Sensor - G42-

4 - Intake Air Temperature Sensor - G42- with Manifold Absolute Pressure Sensor - G71-

- ❑ 5 Nm

5 - O-Ring

- ❑ Replace after removing

6 - Intake Manifold Bolt

- ❑ 9 Nm

7 - Outer Intake Manifold Threaded Pin

- ❑ 9 Nm
- ❑ Installed on the outer positions as a guide

8 - Seal

- ❑ Check and replace if damaged

9 - Channel Separating Plate Vacuum Diaphragm (Intake Manifold Flaps)

10 - Fuel Injector Fuel Rail

11 - Fuel Injectors

- ❑ Replace the O-ring and Teflon® ring
- ❑ Note correct installation position
- ❑ Removing and installing. Refer to ⇒ "2.2 Fuel Injectors, Removing and Installing", page 285 .

12 - Bolt

- ❑ 9 Nm
- ❑ High pressure line to intake manifold

13 - Bracket

- ❑ Connectors

14 - Bolt

- ❑ 5 Nm

15 - Bolt

- ❑ 20 Nm
- ❑ For the intake manifold bracket

16 - Throttle Valve Control Module - J338- Bolts

- ❑ 7 Nm

17 - Nut For The Intake Manifold Support

- ❑ 10 Nm

18 - Intake Manifold Support

19 - Rubber Bushing

- ❑ 5 Nm

20 - Throttle Valve Control Module - J338- , EPC Throttle Drive - G186- ,

- ❑ EPC Throttle Drive Angle Sensor 1 - G187- and EPC Throttle Drive Angle Sensor 2 - G188-
- ❑ The Throttle Valve Control Module - J338- must be adapted to the Engine Control Module - J623- when it is removed and installed or replaced. See "Guided Functions"; to do so, use Vehicle Diagnostic Tester

21 - Seal

- ❑ Replace after removing

22 - Fuel Pressure Sensor - G247-

- ❑ ⇒ "5.2 Fuel Pressure Sensor G247 , Removing and Installing", page 314 .
- ❑ Coat the sealing point and thread with clean engine oil.

23 - Bolts

- ❑ 9 Nm

Protected by copyright. Copying for private or commercial purposes, in part or whole, is not permitted unless authorised by Volkswagen AG. Volkswagen AG does not guarantee or accept any liability with respect to the correctness of information in this document. Copyright by Volkswagen AG.

- ❑ Fuel rail to cylinder head

4.1.2 Overview - Intake Manifold, with Intake-Manifold Fuel Injection

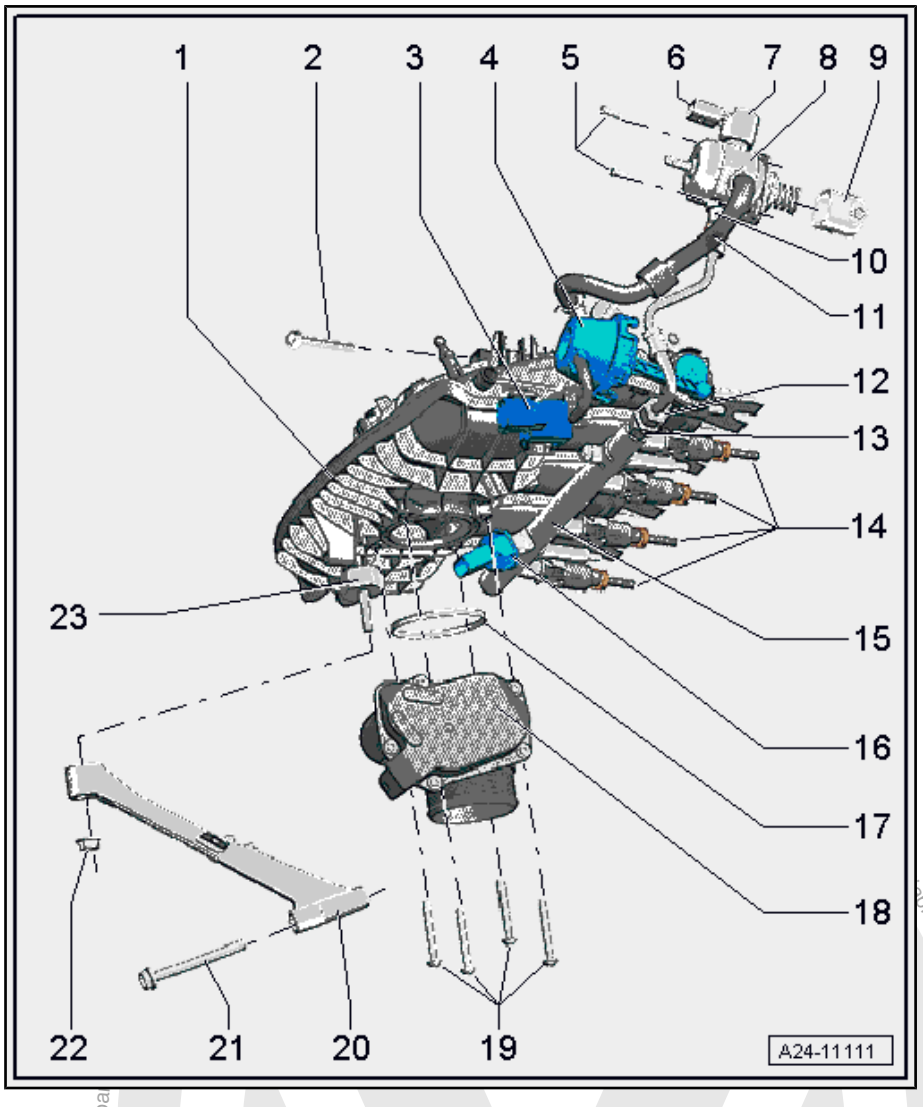

1 - Intake Manifold

- ❑ Removing and installing. Refer to ⇒ "4.3 Intake Manifold, Removing and Installing", page 304 .

2 - Intake Manifold Bolt

- ❑ 9 Nm

3 - Intake Manifold Runner Control Valve - N316-

4 - Channel Separating Plate Vacuum Diaphragm (Intake Manifold Flaps)

5 - High Pressure Pump Bolts

- ❑ 20 Nm
- ❑ Replace after removing
- ❑ Tighten uniformly

6 - Connector

- ❑ For the Fuel Pressure Regulator Valve - N276-

7 - Fuel Pressure Regulator Valve - N276-

8 - High Pressure Pump

- ❑ With Fuel Pressure Regulator Valve - N276-
- ❑ There is an electric fuel pump located in the fuel tank that supplies the fuel to the mechanical high pressure pump.
- ❑ When installing, make sure that no dirt enters the fuel system.
- ❑ Must not be subjected to knocks and impacts
- ❑ The fuel system must be without pressure to install the high-pressure pump, releasing fuel pressure. Refer to ⇒ "1.2 High Fuel Pressure, Reducing", page 283 .
- ❑ Install the fuel lines free of tension
- ❑ Removing and installing. Refer to ⇒ "7.2 High Pressure Pump, Removing and Installing", page 328 .

9 - Roller Tappet

- ❑ May remain in the vacuum pump after removing the high pressure pump, removable

10 - High Pressure Line

- ❑ To the combustion chamber fuel injectors fuel rail
- ❑ Lubricate the high pressure line with engine oil
- ❑ Do not install a tensioned high pressure line (pay attention to cleanliness).

11 - Fuel Line

- ❑ To the fuel rail intake manifold fuel injectors

Protected by copyright. Copying for private or commercial purposes, in part, is not permitted unless authorized by Volkswagen AG. Copyright by Volkswagen AG. No liability with respect to the correctness of information in this document.

Copyright by Volkswagen AG. Volkswagen AG does not guarantee or accept any liability with respect to the correctness of information in this document. Copyright by Volkswagen AG. Protected by copyright. Copying for private or commercial purposes, in part or in whole, is not permitted unless authorised by Volkswagen AG.

12 - High Pressure Line Union Nut

- ❑ 27 Nm
- ❑ Lubricate the high pressure line with engine oil

13 - High Pressure Line Connection

- ❑ 40 Nm
- ❑ Replace after removing
- ❑ Coat the threads with clean engine oil.

14 - Fuel Injectors

- ❑ Replace the O-ring and Teflon® ring
- ❑ Note correct installation position
- ❑ Removing and installing. Refer to ⇒ “2.2 Fuel Injectors, Removing and Installing”, page 285 .

15 - Combustion Chamber Fuel Injector Fuel Rail

16 - Fuel Pressure Sensor - G247-

- ❑ 27 Nm
- ❑ Coat the sealing point with clean engine oil.
- ❑ Removing and installing. Refer to ⇒ “5.2 Fuel Pressure Sensor G247 , Removing and Installing”, page 314 .

17 - Seal

- ❑ Replace after removing

18 - Throttle Valve Control Module - GX3-

- ❑ Consists of:

  EPC Throttle Drive - G186-

  EPC Throttle Drive Angle Sensor 1 - G187-

  EPCThrottle Drive Angle Sensor 2 - G188-

- ❑ After replacing or removing and installing the Throttle Valve Control Module - GX3- must be adapted to the Engine Control Module - J623- . Refer to Vehicle Diagnostic Tester

19 - Throttle Valve Control Module - GX3- Bolts

- ❑ 7 Nm

20 - Intake Manifold Support

21 - Bolt

- ❑ 20 Nm
- ❑ For the intake manifold bracket

22 - Intake Manifold Support Nut

- ❑ 10 Nm

23 - Rubber Bushing

- ❑ 5 Nm

4.2 Overview - Intake Manifold Lower Section with Fuel Rail

⇒ "4.2.1 Overview - Intake Manifold Lower Section with Fuel Rail, Direct Fuel Injection", page 300

4.2.1 Overview - Intake Manifold Lower Section with Fuel Rail, Direct Fuel Injection

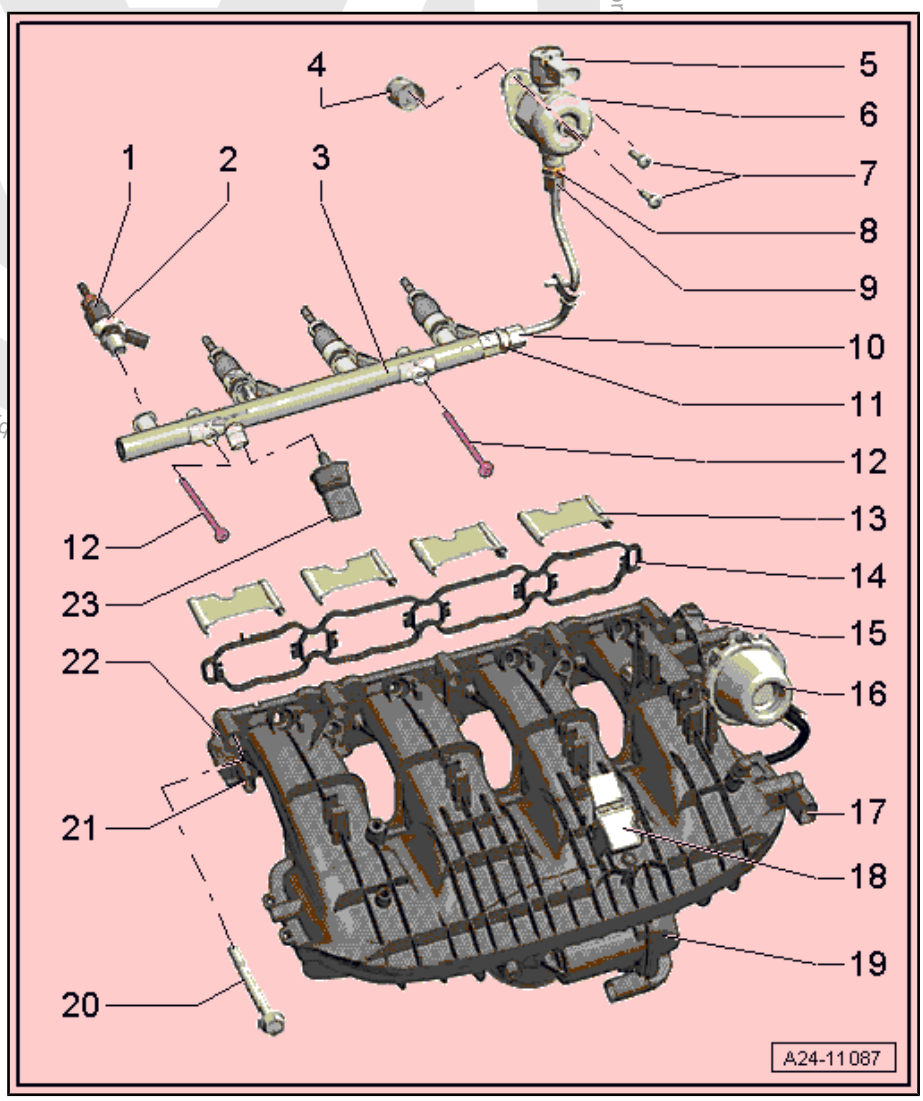

1 - Fuel Injector

- ❑ With combustion chamber seal (Teflon® seal), always replace
- ❑ Replace the O-rings.
- ❑ Make sure it is installed in the correct position.
- ❑ Removing and installing. Refer to ⇒ "2.2 Fuel Injectors, Removing and Installing", page 285 .

2 - Support Ring

- ❑ Replace after removing

3 - Fuel Rail for Combustion Chamber Fuel Injector

- ❑ 9 Nm
- ❑ Removing and installing. Refer to ⇒ "4.4 Fuel Rail, Removing and Installing, Direct Fuel Injection", page 309 .

4 - Roller Tappet

5 - Fuel Pressure Regulator Valve - N276-

6 - High Pressure Pump

- ❑ With Fuel Pressure Regulator Valve - N276-
- ❑ There is an electric fuel pump located in the fuel tank that supplies the fuel to the mechanical high pressure pump.
- ❑ Pay attention when installing the high pressure pump, that no dirt enters the fuel system.
- ❑ The fuel system must be without pressure to install the high-pressure pump, releasing fuel pressure. Refer to ⇒ "1.2 High Fuel Pressure, Reducing", page 283 .
- ❑ Install the fuel lines free of tension
- ❑ Removing and installing. Refer to ⇒ "7.2 High Pressure Pump, Removing and Installing", page 328 .

7 - High Pressure Pump Bolts

- ❑ 20 Nm
- ❑ Replace after removing
- ❑ Tighten uniformly

8 - High Pressure Line Connection On High Pressure Pump

9 - High Pressure Line Union Nut

- ❑ 27 Nm

- ❑ Lubricate the high pressure line with engine oil

10 - High Pressure Line Union Nut

- ❑ 27 Nm
- ❑ Lubricate the high pressure line with engine oil

11 - Connections for High Pressure Line On Fuel Rail

12 - Bolts

- ❑ 9 Nm

13 - Channel Separating Plate

14 - Seal

- ❑ Check and replace if damaged

15 - Charge-Motion Valve Adjusters (Intake Manifold Flap)

16 - Channel Separating Plate Vacuum Diaphragm (Intake Manifold Flaps)

17 - Intake Manifold Runner Control Valve - N316-

18 - Intake Manifold Sensor - GX9-

- ❑ 5 Nm
- ❑ Consists of:

  Intake Air Temperature Sensor - G42-

  Manifold Absolute Pressure Sensor - G71-

19 - Throttle Valve Control Module - GX3-

- ❑ Consists of:

  EPC Throttle Drive - G186-

  EPC Throttle Drive Angle Sensor 1 - G187-

  EPC Throttle Drive Angle Sensor 2 - G188-

- ❑ After replacing or removing and installing, the Throttle Valve Control Module - GX3- must be adapted to the Engine Control Module - J623- using the Vehicle Diagnostic Tester .

20 - Intake Manifold Stud Bolt

- ❑ 9 Nm

21 - Intake Manifold Runner Position Sensor - G336-

- ❑ After replacing or removing and installing, the Intake Manifold Runner Position Sensor - G336- must be readapted to the Engine Control Module - J623- using the Vehicle Diagnostic Tester .

22 - Intake Manifold

- ❑ Removing and installing. Refer to ⇒ “4.3 Intake Manifold, Removing and Installing”, page 304 .

23 - Fuel Pressure Sensor - G247-

- ❑ 27 Nm
- ❑ Coat the sealing point with clean engine oil.
- ❑ Removing and installing. Refer to
  ⇒ “5.2 Fuel Pressure Sensor G247 , Removing and Installing”, page 314 .

Protected by copyright. Copyright by Volkswagen AG. Volkswagen AG does not guarantee or accept any liability with respect to the correctness of information in this document. Copyright by Volkswagen AG.

4.2.2 Overview - Intake Manifold Lower Section with Fuel Rail, Multiport Fuel Injection

Note

Only for vehicles with engine codes CHHB and CXDA

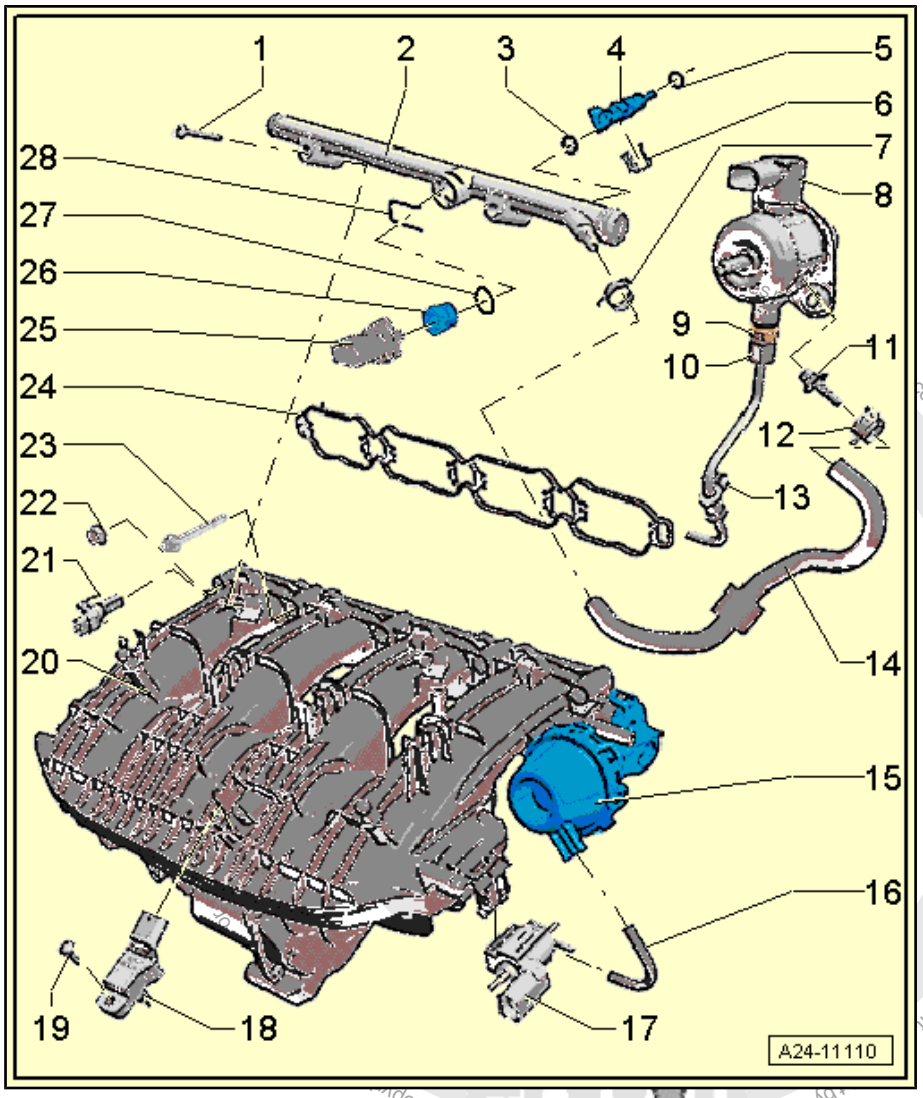

1 - Bolt

- ❑ 9 Nm
- ❑ For the intake manifold-fuel injector fuel rail

2 - Intake Manifold- Fuel Injector Fuel Rail

3 - O-Ring

- ❑ Replace after removing

4 - Fuel Injector

- ❑ Replace the O-rings.
- ❑ Make sure it is installed in the correct position.
- ❑ Removing and installing. Refer to ⇒ “2.3 Intake Manifold-Fuel Injectors, Removing and Installing”, page 287 .

5 - O-Ring

- ❑ Replace after removing

6 - Clip

7 - Spring Clamp

8 - High Pressure Pump

- ❑ With Fuel Pressure Regulator Valve - N276-
- ❑ There is an electric fuel pump located in the fuel tank that supplies the fuel to the mechanical high pressure pump.
- ❑ Pay attention when installing the high pressure pump, that no dirt enters the fuel system.
- ❑ The fuel system must be without pressure to install the high-pressure pump, releasing fuel pressure. Refer to ⇒ “1.2 High Fuel Pressure, Reducing”, page 283 .
- ❑ Install the fuel lines free of tension
- ❑ Removing and installing. Refer to ⇒ “7.2 High Pressure Pump, Removing and Installing”, page 328 .

9 - High Pressure Line Connection

- ❑ 30 Nm
- ❑ If the connection was loosened, it must be replaced.

10 - High Pressure Line Union Nut

- ❑ 27 Nm
- ❑ High pressure line to the combustion chamber fuel injectors fuel rail

- ❑ Lubricate the high pressure line with engine oil
- ❑ Do not install a tensioned high pressure line (pay attention to cleanliness).

11 - Fuel Line Connections

- ❑ 20 Nm
- ❑ On vehicles without multiport fuel injection, a sealing plug is installed

12 - Clamp

- ❑ Replace after removing

13 - Bolt

- ❑ 5 Nm

14 - Fuel Line

- ❑ Fuel line to the intake manifold fuel injector fuel rail

15 - Vacuum Diaphragm for Channel Separating Plate

16 - Vacuum Hose

17 - Intake Manifold Runner Control Valve - N316-

18 - Intake Manifold Sensor - GX9-

- ❑ Consists of:

Intake Air Temperature Sensor - G42-

Manifold Absolute Pressure Sensor - G71-

19 - Bolt

- ❑ 5 Nm

20 - Intake Manifold

- ❑ Removing and installing. Refer to ⇒ “4.3 Intake Manifold, Removing and Installing”, page 304 .

21 - Intake Manifold Runner Position Sensor - G336-

- ❑ After replacing or removing and installing, the Intake Manifold Runner Position Sensor - G336- must be adapted to the Engine Control Module - J623- using the ⇒ Vehicle diagnostic tester.

22 - Intake Manifold Nut

- ❑ 9 Nm

23 - Intake Manifold Bolts

- ❑ 9 Nm

24 - Seal

- ❑ Check and replace if damaged

25 - Low Fuel Pressure Sensor - G410-

- ❑ 15 Nm
- ❑ Must be bolted with the adapter -26-
- ❑ Removing and installing. Refer to ⇒ “5.4 Low Fuel Pressure Sensor G410 , Removing and Installing”, page 318 .

26 - Adapter

- ❑ 15 Nm
- ❑ Must be bolted with the Low Fuel Pressure Sensor - G410-
- ❑ Replace O-ring

27 - O-Ring

- ❑ Replace after removing

28 - Clip

- ❑ For the locating point of the Low Fuel Pressure Sensor - G410- in the fuel rail.

Protected by copyright. Copying for private or commercial purposes, in part or in whole, is not permitted unless authorised by Volkswagen AG. Volkswagen AG does not guarantee or accept any liability with respect to the correctness of information in this document. Copyright by Volkswagen AG.

4.3 Intake Manifold, Removing and Installing

Special tools and workshop equipment required

- Torx Socket - T30 - T10347-
- Flare Nut Attachment - 17mm - T10456-

If the intake manifold is removed or replaced, the Intake Manifold Runner Position Sensor - G336- must be adapted to the Engine Control Module - J623- .

Removing

– Disconnect the battery. Refer to ⇒ Electrical Equipment; Rep. Gr. 27 ; Battery; Battery, Disconnecting and Connecting .

– Remove the engine cover. Refer to ⇒ “3.1 Engine Cover, Removing and Installing”, page 38 .

– Remove the bolts -arrows-.

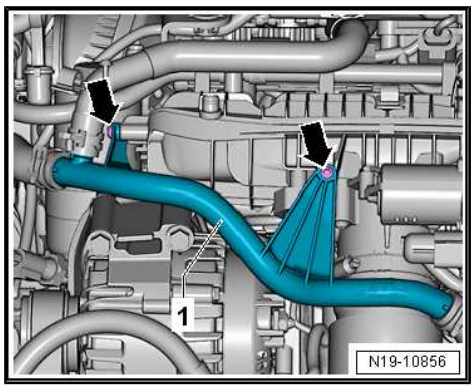

– Remove the air filter housing -3-. Refer to ⇒ “3.2 Air Filter Housing, Removing and Installing”, page 294 .

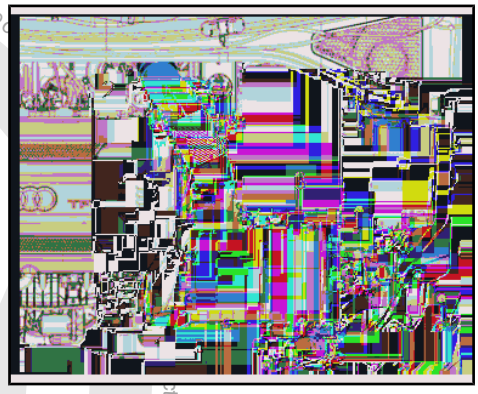

– Remove the left and right bolt -arrow-.

– Unclip and remove the lower section -1- of the air duct.

– Remove the noise insulation. Refer to ⇒ Body Exterior; Rep. Gr. 66 ; Noise Insulation; Overview - Noise Insulation .

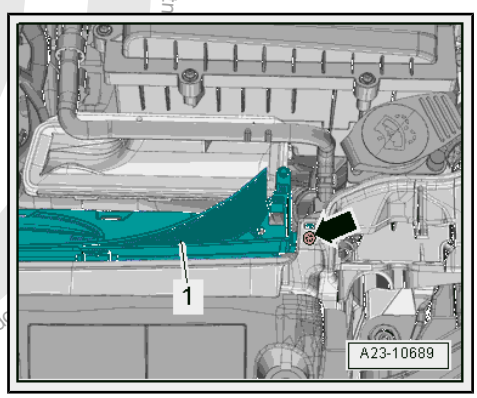

Protected by copyright. Copying for private or commercial purposes, in part or in whole, is not permitted unless authorised by Volkswagen AG. Volkswagen AG does not guarantee ... copyright by Volkswagen AG.

– Free up the coolant hose -3-.
– Remove the connector -1- from the Charge Air Pressure Sensor - G31- .
– Remove the bolts -arrows-.
– Loosen the air guide hose clamp -2-. Remove the air guide hose downward from the Throttle Valve Control Module - GX3- .

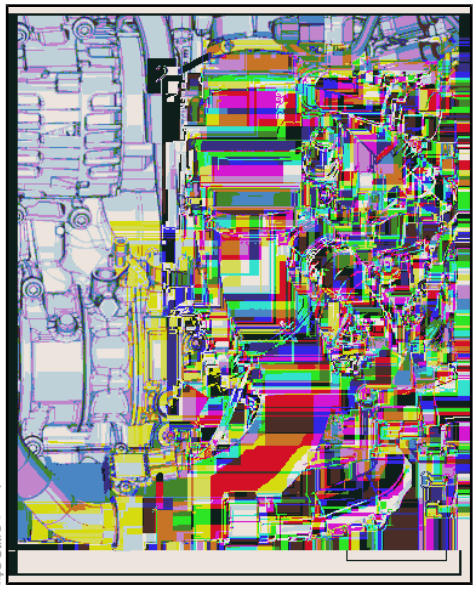

– Disconnect the connectors -1, 2 and 3- underneath the intake manifold.
– Remove the fuel return hose -1- from the intake manifold.

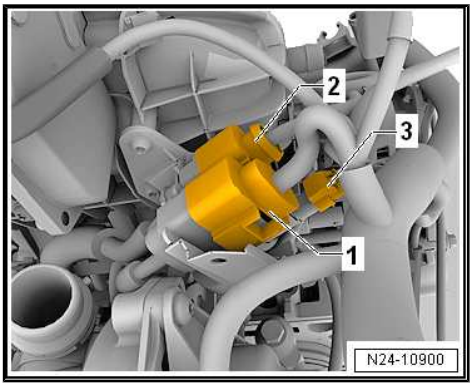

Protected by copyright. Copying for private or commercial purposes, in part or in whole, is not permitted unless authorised by Volkswagen AG. Volkswagen AG does not guarantee or accept any liability with respect to the correctness of information in this document. Copyright by Volkswagen AG.

Vehicles without Intake-Manifold Fuel Injection

– Unclip the line -1-.
– Disconnect the connectors -4 and 5-.

Vehicles with Intake-Manifold Fuel Injection

– Disconnect the connector -3- from the mount.
– Disconnect the connectors -4, 5 and 6-.

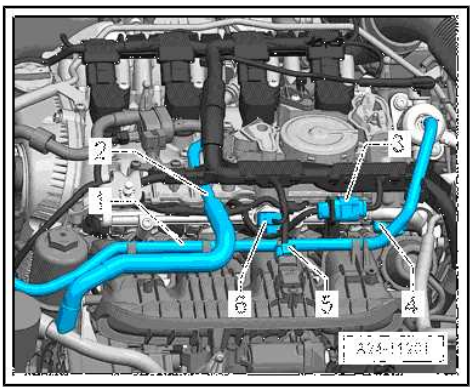

– Free up the wiring harness from the fuel rail.

For All Vehicles

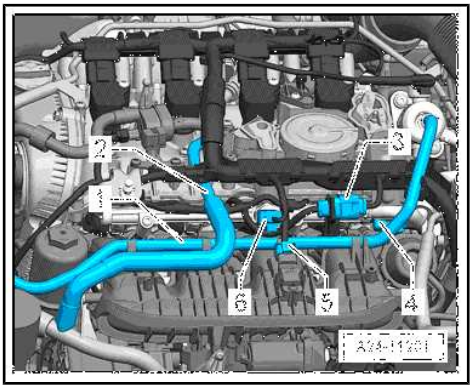

– Remove the connector and vacuum hoses from the Intake Manifold Runner Control Valve - N316- -1-.

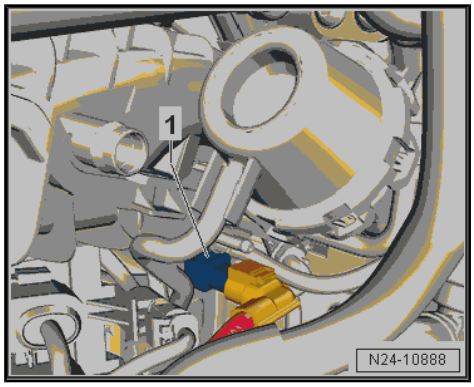

– Free up the wiring harness -1 and 2- from the air guide pipe.
– Loosen the screw-type clamp -3-.
– Remove the bolts -arrows-.

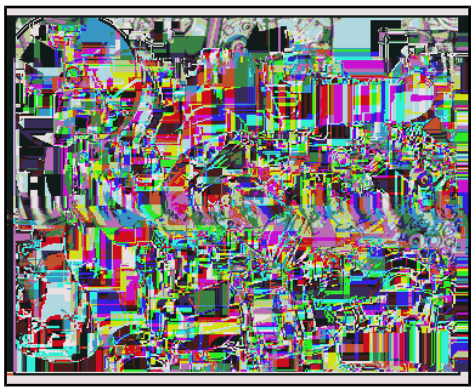

– Loosen the hose clamp -arrow- and remove the left charge air hose -1- with the air guide pipe downward.

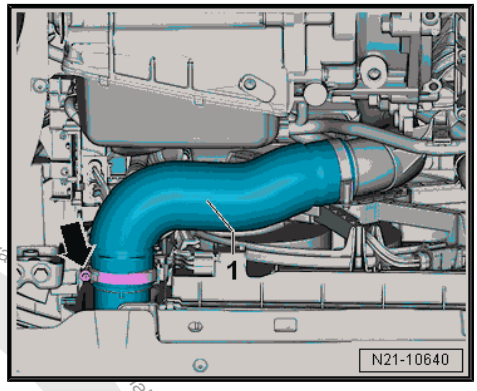

– Remove the retaining clamp -arrow- for the high pressure line.

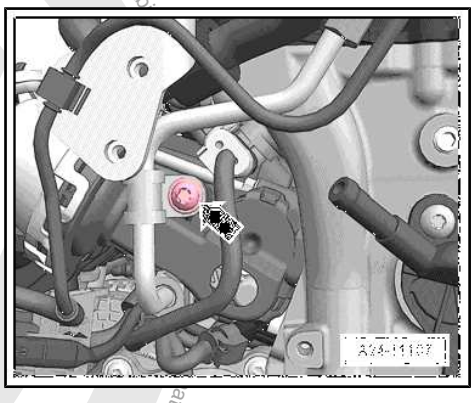

CAUTION

Fuel system is under pressure.

Risk of injury from fuel spraying out.

- **Wear protective eyewear.**
- **Wear safety gloves.**
- **Reduce the pressure: Lay clean cloths around the connection location and carefully open the connection point.**

Protected by copyright. Copyright for private or commercial purposes, in whole or in part, is not permitted unless authorised by Volkswagen AG. Volkswagen AG does not guarantee the accuracy and completeness of this documentation. Copyright by Volkswagen AG.

– Counterhold the connection -A- and loosen the union nut -arrow-.

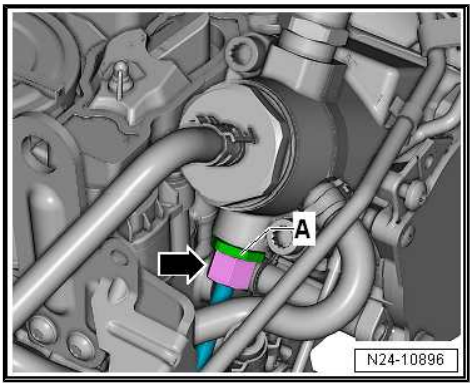

– Loosen the union nut on the fuel rail with the Flare Nut Attachment - 17mm - T10456- and remove the high pressure line.

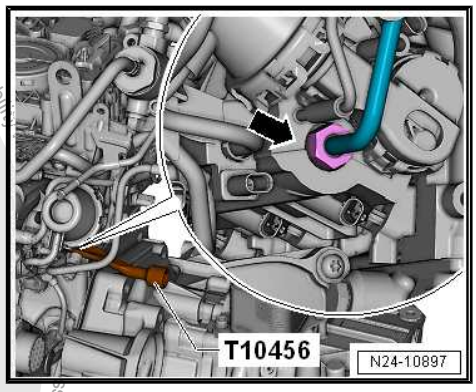

Note

- *The fuel system must have no pressure.*
- *Wipe up any leaking fuel with a clean cloth.*
- *Seal the open connections with clean caps. Make sure that no contaminants enter the fuel system.*

– Slightly loosen the nut -3- and remove the bolt -1- completely.

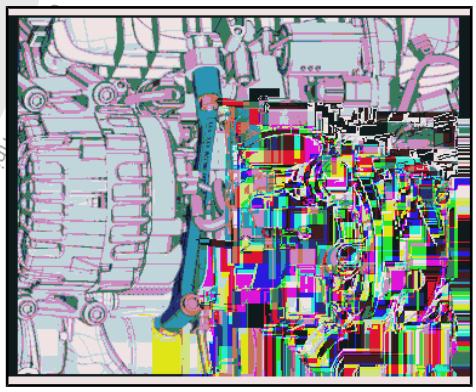

– Disconnect the connector -1- from the Camshaft Position Sensor - G40- .

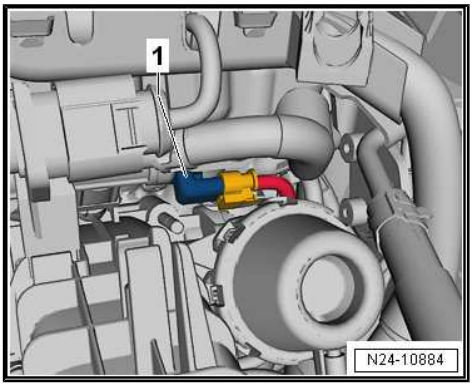

Protected by copyright. Copying for private or commercial purposes, in part or in whole, is not permitted unless authorised by Volkswagen AG. Volkswagen AG does not guarantee or accept any liability with respect to the correctness of information in this document. Copyright by Volkswagen AG.

– Disconnect the connector -1- from the Intake Manifold Runner Position Sensor - G336- .

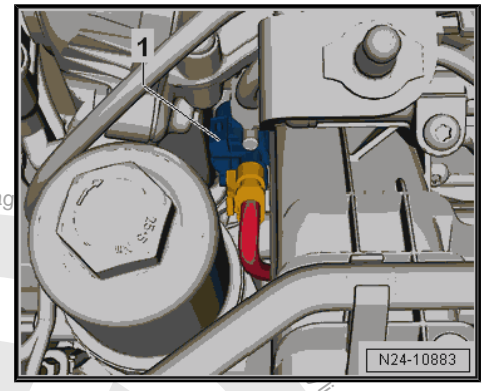

– Remove the nuts -A- from the intake manifold and remove the bolts -arrows- using the Torx Socket - T30 - T10347- .

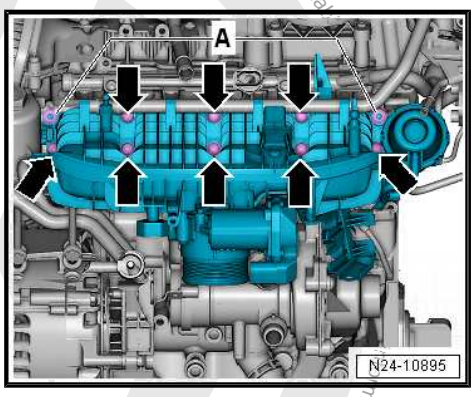

– Pull the intake manifold slightly away from the cylinder head and remove the bolts -arrows- for the bracket -A-.

– Remove the intake manifold from the cylinder head.

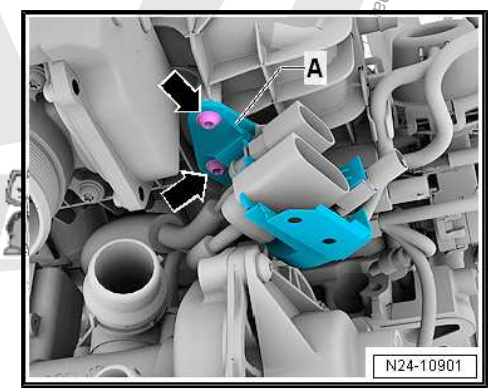

Note

Cover the intake channels with a clean cloth.

Installing

– If the connections on the high pressure pump were loosened, replace the connections.

– Position the intake manifold on the cylinder head and tighten the connector bracket -A-.

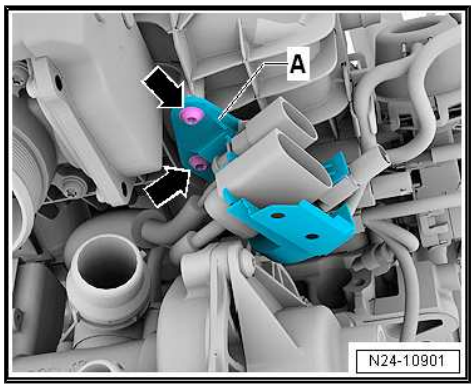

Protected by copyright. Copying for private or commercial purposes, in part or in whole, is not permitted unless authorised by Volkswagen AG. Volkswagen

– Tighten the nuts -A- hand-tight.

– Tighten the bolts -arrows- evenly, working from the inside to the outside. Use the Torx Socket - T30 - T10347- .

– Install in reverse order of removal.

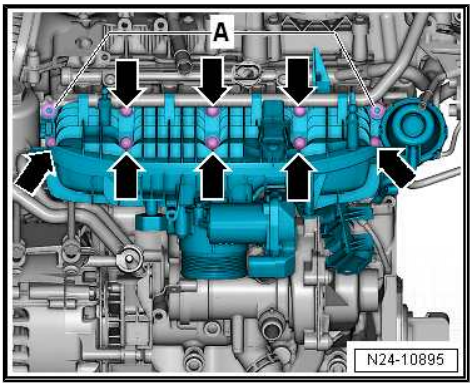

Tightening Specifications

♦ Refer to ⇒ “4.1 Overview - Intake Manifold”, page 296 .

♦ Refer to
⇒ “4.2.2 Overview - Intake Manifold Lower Section with Fuel Rail, Multiport Fuel Injection”, page 302 .

4.4 Fuel Rail, Removing and Installing, Direct Fuel Injection

Note

Intake manifold must be removed, Intake manifold, removing. Refer to
⇒ “4.3 Intake Manifold, Removing and Installing”, page 304 .

– Remove all electrical connectors from the fuel injectors.

– Remove bolts -arrows- from the fuel rail.

– Remove fuel rail from the cylinder head.

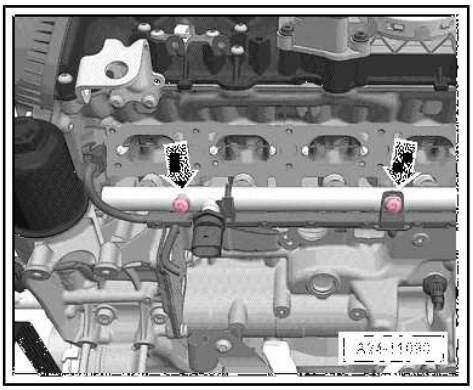

Installing

– Install in reverse order of removal.

– Install the intake manifold. Refer to
⇒ “4.3 Intake Manifold, Removing and Installing”, page 304 .

Tightening Specifications

♦ Refer to
⇒ “4.2.1 Overview - Intake Manifold Lower Section with Fuel Rail, Direct Fuel Injection”, page 300 .

♦ Refer to
⇒ “4.2.1 Overview - Intake Manifold Lower Section with Fuel Rail, Direct Fuel Injection”, page 300

4.5 Throttle Valve Control Module - GX3- , Removing and Installing

Caution

This procedure contains mandatory replaceable parts. Refer to component overview prior to starting procedure.

Mandatory Replacement Parts

♦ Seal - Throttle Valve Control Module

The Throttle Valve Control Module - GX3- is comprised of:

♦ EPC Throttle Drive - G186-

♦ EPC Throttle Drive Angle Sensor 1 - G187-

♦ EPC Throttle Drive Angle Sensor 2 - G188-

Protected by copyright. Copying for private or commercial purposes, in part or in whole, is not permitted unless authorised by Volkswagen AG. Volkswagen AG does not guarantee or accept any liability with respect to the correctness of information in this document. Copyright by Volkswagen AG.

Removing

– Open the retainer in direction of -arrow- and remove the cover -2-.

– Remove the engine cover. Refer to ⇒ “3.1 Engine Cover, Removing and Installing”, page 38 .

– Remove the bolts -1 and 3-.

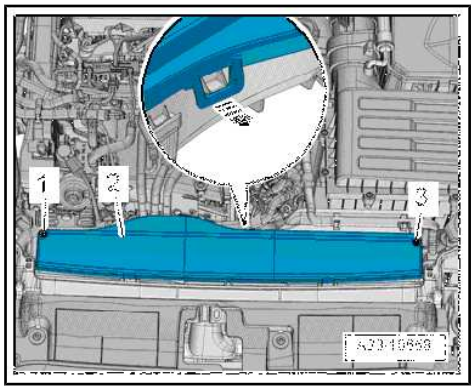

– Free up the coolant hose -2-.

– Open the retaining tabs in direction of -arrows-, remove the upper air duct -1-.

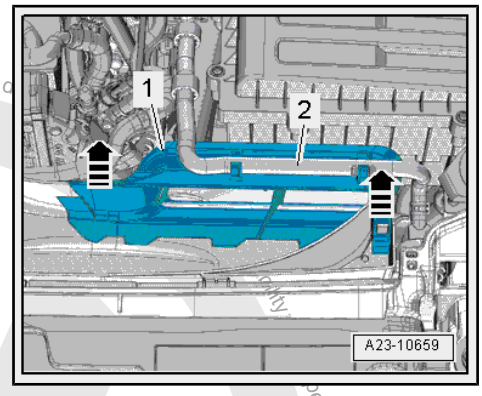

– Remove the left and right bolts -arrow-.

– Unclip and remove the lower section -1- of the air duct.

– Remove the noise insulation. Refer to ⇒ Body Exterior; Rep. Gr. 66 ; Noise Insulation; Overview - Noise Insulation .

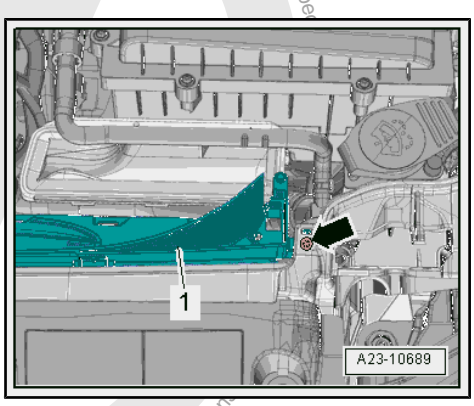

Note

Ignore item -1-.

– Loosen the hose clamp -2-, remove the air duct hose from the charge air cooler.

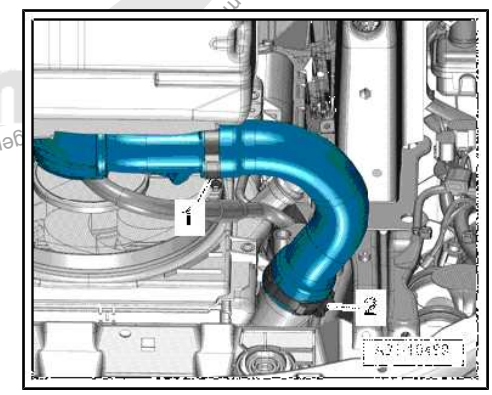

Protected by copyright. Copying for private or commercial purposes, in part or in whole, is not permitted unless authorised by Volkswagen AG.

– Free up the coolant hose -3-.
– Remove the connector -1- from the Charge Air Pressure Sensor - G31- .
– Remove the bolts -arrows-.
– Loosen air guide hose clamp -2- and remove the air duct hose from the Throttle Valve Control Module - GX3- .
– Remove the air duct hose downward.
– Disconnect the connector -1- from the Throttle Valve Control Module - GX3- .

– Remove the Throttle Valve Control Module - GX3- bolts -arrows- from below and remove Throttle Valve Control Module - GX3- .

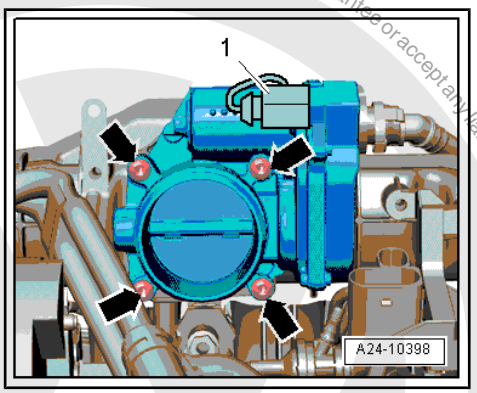

Installing

– Install in reverse order of removal.
– Clean the sealing ring surface.
– Replace the seal.

Tightening Specifications

♦ Refer to ⇒ “4.1 Overview - Intake Manifold”, page 296 .

– After replacing the Throttle Valve Control Module , it must be adapted to the Engine Control Module - J623- . Use a Vehicle Diagnostic Tester to do so.

4.6 Throttle Valve Control Module, Cleaning

Special tools and workshop equipment required

♦ Acetone, commercially available
♦ Brush

Note

♦ *If a new Engine Control Module - J623- is installed, then it must be adapted to the throttle valve control module.*
♦ *Dirt and coking on the end stop can produce incorrect adaptation values.*
♦ *The throttle valve connections must not be damaged when cleaning.*

Protected by copyright. Copying for private or commercial purposes, in part or in whole, is not permitted unless authorised by Volkswagen AG. Copyright by Volkswagen AG. We do not guarantee or accept any liability with respect to the correctness of information in this document.

– Remove the Throttle Valve Control Module - GX3- . Refer to ⇒ “4.5 Throttle Valve Control Module GX3 , Removing and Installing”, page 309 .

– Open the throttle valve by hand and hold it in this position using a plastic or wood wedge -arrow-.

CAUTION

Risk of injury from acetone. Acetone is highly flammable and can cause eye and skin irritation.

- **Wear protective eyewear.**
- **Wear safety gloves.**

– Clean the throttle valve connection thoroughly with acetone and a brush especially in the area near -arrows- the closed throttle valve.

– Wipe the throttle valve connections with a lint-free cloth.

– Let the acetone dry completely.

– Install the Throttle Valve Control Module - GX3- . Refer to ⇒ “4.5 Throttle Valve Control Module GX3 , Removing and Installing”, page 309 .

– Erase the adaptation values and then adapt the Engine Control Module - J623- to the Throttle Valve Control Module . Use a Vehicle Diagnostic Tester to do so.

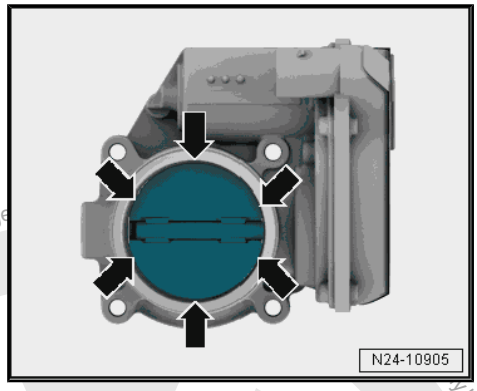

Protected by copyright. Copying for private or commercial purposes, in part or in whole, is not permitted unless authorised by Volkswagen AG. Copyright by Volkswagen AG. No liability with respect to the correctness of information in this document.

5 Sensors

⇒ “5.1 Overview - Structure Borne Sound Actuator and Control Module”, page 313

⇒ “5.2 Fuel Pressure Sensor G247 , Removing and Installing”, page 314

⇒ “5.3 Fuel Pressure Sensor G247 , Checking”, page 316

⇒ “5.4 Low Fuel Pressure Sensor G410 , Removing and Installing”, page 318

Volkswagen AG. Volkswagen AG does not guarantee or accept any li

5.1 Overview - Structure Borne Sound Actuator and Control Module

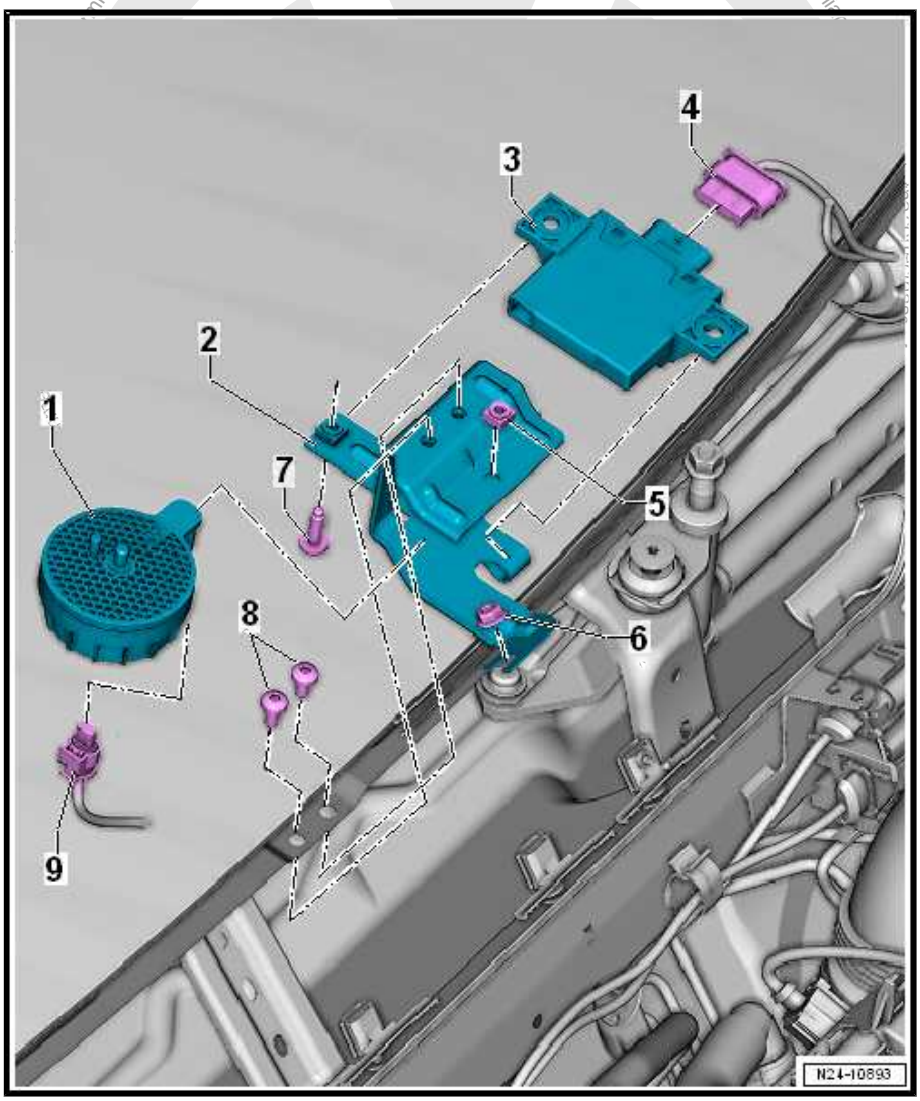

1 - Structure-Borne Sound Actuator - R214-

- ❑ Component location: inside the plenum chamber
- ❑ To remove and install, remove the plenum chamber cover. Refer to ⇒ Body Exterior; Rep. Gr. 50 ; Bulkhead; Plenum Chamber Cover, Removing and Installing .
- ❑ Fastened with the nut -5- to the bracket

2 - Bracket

- ❑ For the Structure-Borne Sound Actuator - R214- and Structure Borne Sound Control Module - J869-
- ❑ Can only be replaced when the windshield is removed

3 - Structure Borne Sound Control Module - J869-

- ❑ Component location: inside the plenum chamber
- ❑ To remove and install, remove the plenum chamber cover. Refer to ⇒ Body Exterior; Rep. Gr. 50 ; Bulkhead; Plenum Chamber Cover, Removing and Installing .
- ❑ Depending on the version, secured with a screw or with two nuts

4 - Connector

- ❑ For the Structure Borne Sound Control Module - J869-

5 - Nut

- ❑ 7 Nm
- ❑ For the Structure-Borne Sound Actuator - R214-

6 - Nut

- ❑ 9 Nm

7 - Bolt/Nut

- ❑ 3 Nm
- ❑ For the Structure Borne Sound Control Module - J869-

8 - Bolt

- ❑ 9 Nm

9 - Connector

- ❑ For the Structure-Borne Sound Actuator - R214-

5.2 Fuel Pressure Sensor - G247- , Removing and Installing

Special tools and workshop equipment required

- ♦ Elbow Assembly Tool - T10118-
- ♦ Socket - 27mm - T40218-

If the Fuel Pressure Sensor - G247- fails, the Fuel Pressure Regulator Valve - N276- will switch off, the electric fuel pump is fully activated and the engine will be driven by the existing fuel pressure. This will reduce the engine torque dramatically.

Removing

– Remove the engine cover. Refer to ⇒ “3.1 Engine Cover, Removing and Installing”, page 38 .

– Remove the bolts -arrows-.

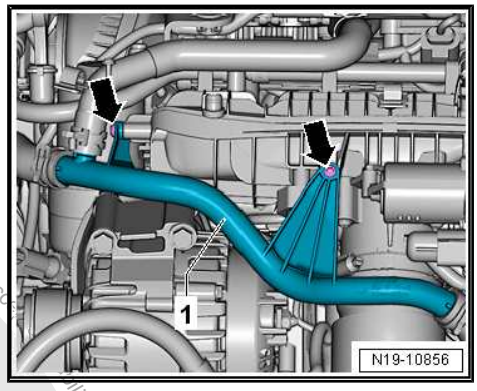

– Remove the air filter housing -3-. Refer to ⇒ “3.2 Air Filter Housing, Removing and Installing”, page 294 .

Protected by copyright. Copying for private or commercial purposes, in part or in whole, is not permitted unless authorised by Volkswagen AG. Volkswagen AG does not guarantee or accept any liability with respect to the correctness of information in this document. Copyright by Volkswagen AG.

– Remove the left and right bolt -arrow-.
– Unclip and remove the lower section -1- of the air duct.
– Remove the noise insulation. Refer to ⇒ Body Exterior; Rep. Gr. 66 ; Noise Insulation; Overview - Noise Insulation .

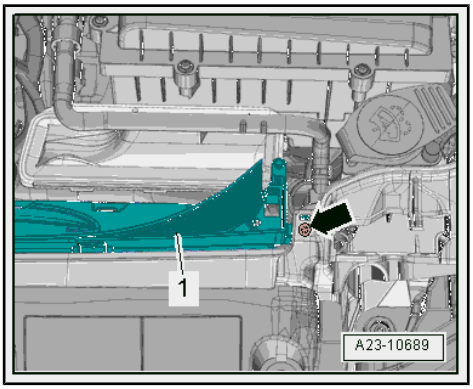

– Free up the coolant hose -3-.
– Remove the connector -1- from the Charge Air Pressure Sensor - G31- .
– Remove the bolts -arrows-.
– Loosen air guide hose clamp -2- and remove the air duct hose from the Throttle Valve Control Module - GX3- downward.

– Remove the nut -2- and bolt -3- and then remove the intake manifold support.
– Remove the rubber bushing -1- for the intake manifold support.

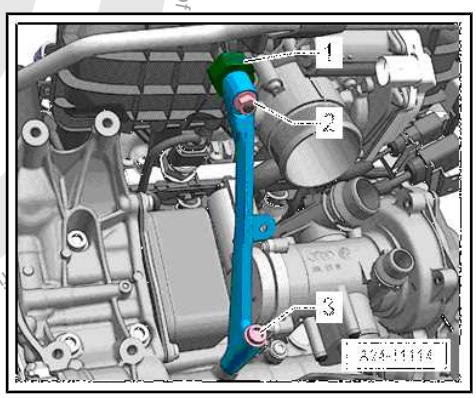

– Use the Elbow Assembly Tool - T10118- -1- to release the connector from the Fuel Pressure Sensor - G247- .

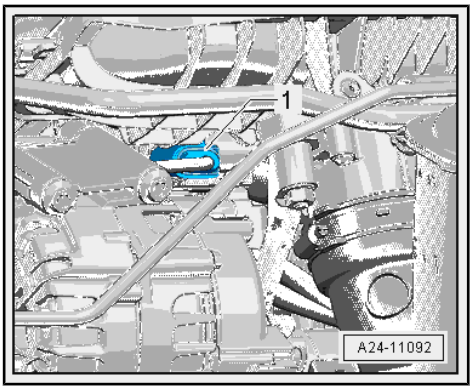

Protected by copyright. Copying for private or commercial purposes, in part or in whole, is not permitted unless authorised by Volkswagen AG. Volkswagen AG does not guarantee

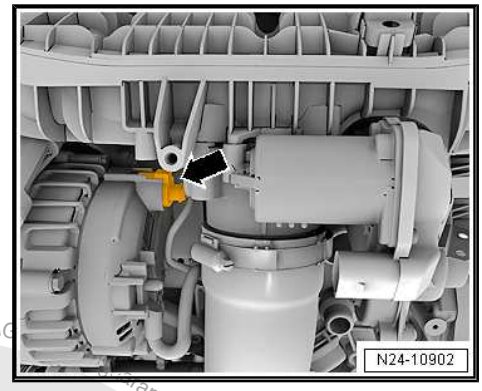

– Remove the connector -arrow- from the generator, otherwise the socket can get hooked to the connector.

– Loosen and remove the Fuel Pressure Sensor - G247- -1- using the Socket - 27mm - T40218-

Installing

– Coat the Fuel Pressure Sensor - G247- sealing point with clean engine oil.

– Install in reverse order of removal.

Tightening Specifications

♦ Refer to
⇒ “4.2.1 Overview - Intake Manifold Lower Section with Fuel Rail, Direct Fuel Injection”, page 300 .

5.3 Fuel Pressure Sensor - G247- , Checking

Special tools and workshop equipment required

♦ Pressure Sensor Tester - VAS6394/1-

♦ Adapter - VAS6394/2-

♦ Vehicle Diagnostic Tester - Test Adapter - 3 Pin - VAS5570-

♦ Torque Wrench 1331 5-50Nm - VAG1331-

♦ Vehicle Diagnostic Tester

Work Procedure

– Remove the engine cover. Refer to
⇒ “3.1 Engine Cover, Removing and Installing”, page 38 .

⚠ CAUTION

Fuel system is under high pressure.
Risk of injury from fuel spraying out.
– Reducing the fuel high pressure.

– Remove the Fuel Pressure Sensor - G247- . Refer to
⇒ “5.2 Fuel Pressure Sensor G247 , Removing and Installing”, page 314 .

– Install the Pressure Sensor Tester - Adapter - VAS6394/2- instead of the Fuel Pressure Sensor - G247- . Tighten it to the tightening specification for the Fuel Pressure Sensor - G247- .

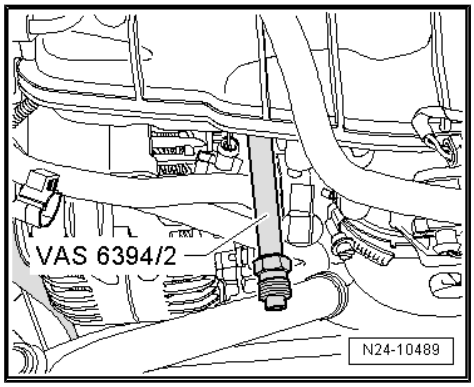

Copyright by Volkswagen AG. Volkswagen AG does not guarantee or accept any liability with respect to the correctness of information in this document. Copyright by Volkswagen AG. Copied by copyright. Copy and distribution for commercial purposes and/or making available to third parties is not permitted unless authorised by Volkswagen AG. Volkswagen AG

– Open the Digital Manometer - VAS6394/1- sealing plug -2- and install the removed Fuel Pressure Sensor - G247- in the opening using the tightening specification.

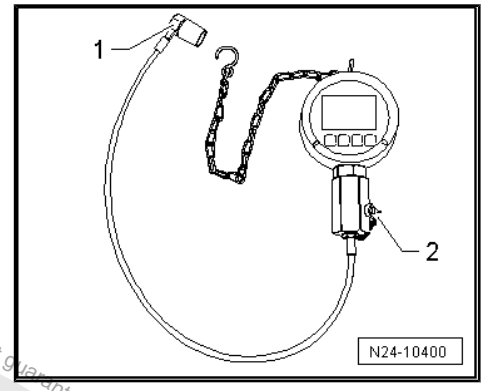

– Use the Vehicle Diagnostic Tester - Test Adapter - 3 Pin - VAS5570- in order establish the electrical connection between the vehicle and the Fuel Pressure Sensor - G247- .

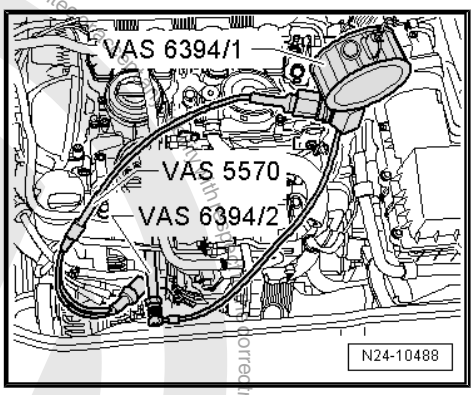

Note

For further work the engine must be started. For this reason the intake hose and air filter housing must be reinstalled.

– Connect the Vehicle Diagnostic Tester .
– Turn on the ignition.
– Select “engine electronics” in On Board Diagnostics (OBD).
– Select “measured values”
– Select “fuel pressure” from the list.

The current value is displayed in field, which the Fuel Pressure Sensor - G247- reports to the Engine Control Module (ECM).

– Briefly press the button -A- once to turn on the Digital Manometer - VAS6394/1-

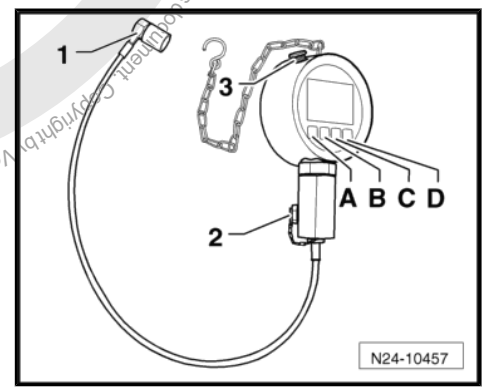

Note

Holding the button -A- for two seconds switches on the illumination for 20 seconds.

The Digital Manometer - VAS6394/1- must display 0 bar/psi; if this is not the case, press the button -C- once briefly to set it back to zero.

Protected by copyright. Copying for private or commercial purposes, in part or in whole, is not permitted unless authorised by Volkswagen AG. Volkswagen AG does not guarantee the correctness of information in this document. Copyright by Volkswagen AG.

– Connect the Digital Manometer - VAS6394/1- to the Pressure Sensor Tester Adapter - VAS6394/2- .

– Start the engine.

– Compare the pressure shown in the Digital Manometer - VAS6394/1- with the actual value in the Vehicle Diagnostic Tester

• The pressures may have a maximum difference of 5 bar (72.5 psi).

– If the difference is greater than 5 bar (72.5 psi), test a new Fuel Pressure Sensor - G247- .

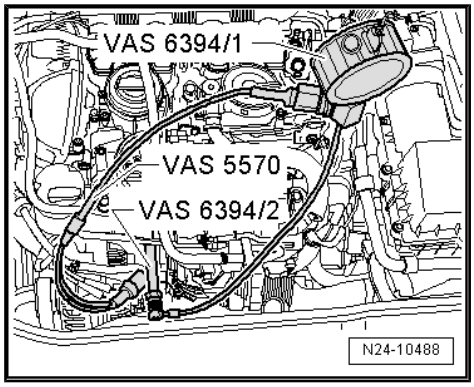

CAUTION

Fuel system is under high pressure.
Risk of injury from fuel spraying out.
– Reducing the fuel high pressure.

– Insert the new Fuel Pressure Sensor - G247- in the Digital Manometer - VAS6394/1- .

– Repeat the test with the new Fuel Pressure Sensor - G247- and compare both values.

If the Measured Values Do Not Now Match Again

– Check the electrical connectors between the Fuel Pressure Sensor - G247- and the ECM. Refer to ⇒ Wiring diagrams, Troubleshooting & Component locations.

If the Measured Values Now Match

– Install a new Fuel Pressure Sensor - G247- . Refer to ⇒ "5.2 Fuel Pressure Sensor G247 , Removing and Installing", page 314 .

Tightening Specifications

♦ Refer to ⇒ "4.2.1 Overview - Intake Manifold Lower Section with Fuel Rail, Direct Fuel Injection", page 300 .

5.4 Low Fuel Pressure Sensor - G410- , Removing and Installing

Caution

This procedure contains mandatory replaceable parts. Refer to component overview prior to starting procedure.

Mandatory Replacement Parts

♦ O-ring - Low fuel Pressure Sensor

Note

Only on vehicles with intake-manifold fuel injection

Removing

– Remove the engine cover. Refer to ⇒ "3.1 Engine Cover, Removing and Installing", page 38 .

Protected by copyright. Copyright by Volkswagen AG. Volkswagen AG does not guarantee or accept any liability with respect to the correctness of information in this document. Copyright by Volkswagen AG.

– Disconnect the connector -6- from the Low Fuel Pressure Sensor - G410- .

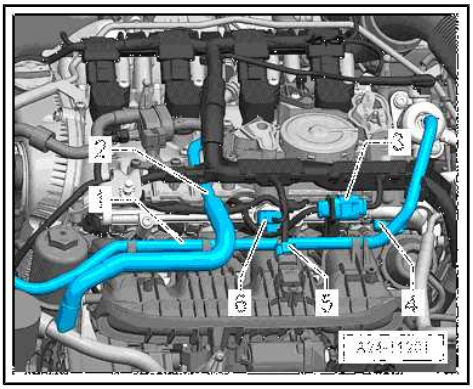

– Remove the clamps -2-.

– Remove the Low Fuel Pressure Sensor - G410- -1- from the fuel rail.

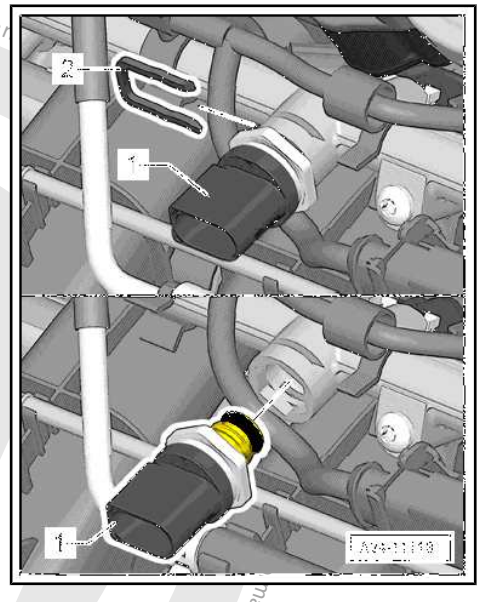

– Remove the Low Fuel Pressure Sensor - G410- -1- from the adapter -2-.

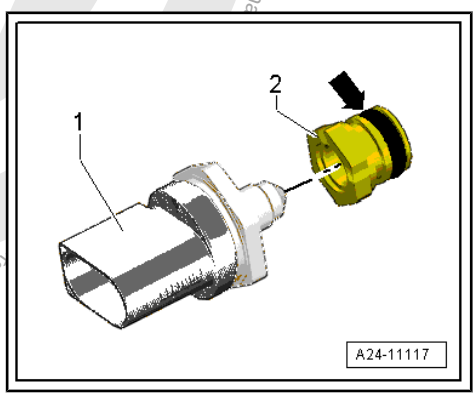

Protected by copyright. Copying for private or commercial purposes, in part or in whole, is not permitted unless authorised by Volkswagen AG. Volkswagen AG does not

Installing

– Replace the O-ring -arrow-.

– Bolt together the adapter -2- and the Low Fuel Pressure Sensor - G410- -1-.

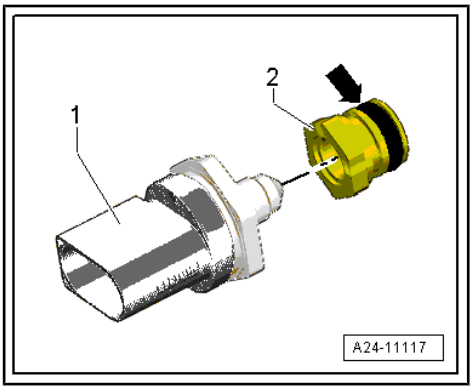

– Carefully slide the Low Fuel Pressure Sensor - G410- -1- all the way into the fuel rail.

– To secure the Low Fuel Pressure Sensor - G410- , slide the clip -2- into the groove.

– Connect the connector.

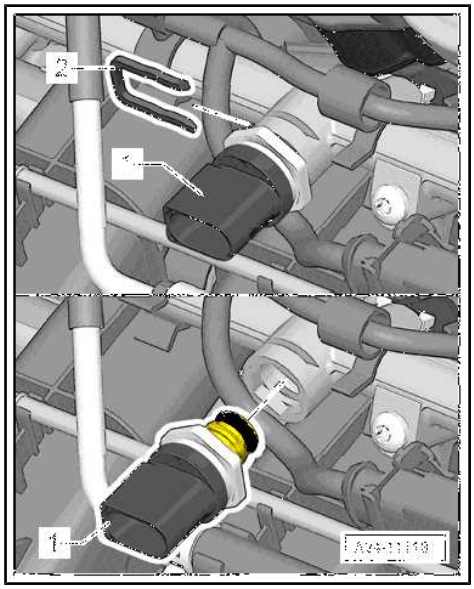

Tightening Specifications

♦ Refer to
⇒ “4.2.2 Overview - Intake Manifold Lower Section with Fuel Rail, Multiport Fuel Injection”, page 302 .

Protected by copyright. Copying for private or commercial purposes, in part or in whole, is not permitted unless authorised by Volkswagen AG. Volkswagen AG does not guarantee or accept any liability with respect to the correctness of information in this document. Copyright by Volkswagen AG.

6 Engine Control Module

⇒ "6.1 Engine Control Module J623 , Removing and Installing", page 321

6.1 Engine Control Module - J623- , Removing and Installing

⇒ "6.1.1 Engine Control Module J623 , Removing and Installing, without Protective Housing", page 321

⇒ "6.1.2 Engine Control Module J623 with Protective Housing, Removing and Installing", page 322

6.1.1 Engine Control Module - J623- , Removing and Installing, without Protective Housing

Special tools and workshop equipment required

- Vehicle Diagnostic Tester

Removing

– Turn on the ignition and select the following menu items on the Vehicle Diagnostic Tester :

- `01 - Engine Electronics`
- `Guided Functions`
- `01 - Engine Control Module Replacing`

– Turn off the ignition and remove the key.

Note

Touching the engine control module with the battery positive terminal damages the engine control module. For this reason the battery must be disconnected before removing the engine control module from its mount. Refer to ⇒ Electrical Equipment; Rep. Gr. 27 ; Battery; Battery, Disconnecting and Connecting .

– Release the retainers in direction of -arrow A- and remove the Engine Control Module - J623- in direction of -arrow B-.

– Unlock and disconnect the connectors from the Engine Control Module - J623- .

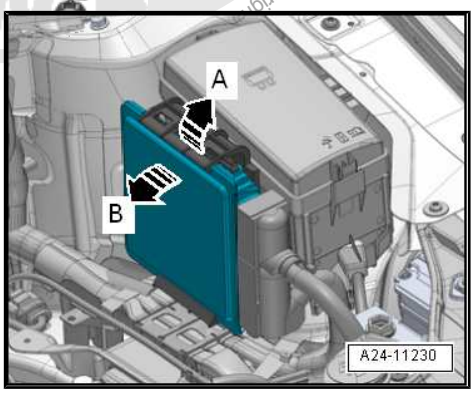

Volkswagen AG. Volkswagen AG does not guarantee or accept any liability with respect to the correctness of information in this document. Copyright by Volkswagen AG. Protected by copyright. Copying for private or commercial purposes, in part or in whole, is not permitted unless authorized by Volkswagen AG.

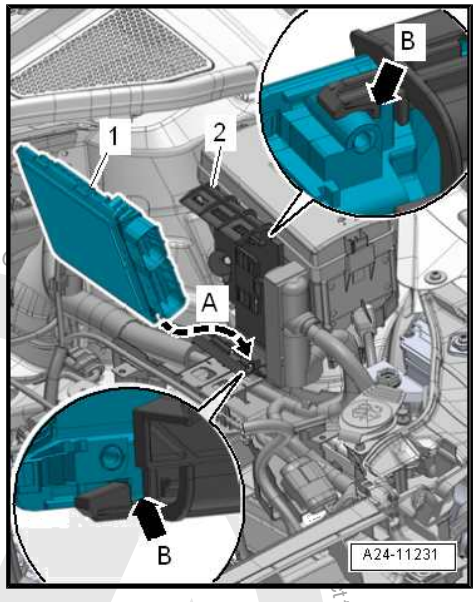

Installing

Install in reverse order of removal. Note the following:

– Place the Engine Control Module - J623- in the bracket with the lower edge forward in direction of -arrow A- and locked on the upper edge.

• The ribs on the ECM must be engaged in the upper and lower recesses on the bracket -B arrows-.

– Connect the battery. Refer to ⇒ Electrical Equipment; Rep. Gr. 27 ; Battery; Battery, Disconnecting and Connecting .

Perform the Following after Installing a New ECM

– Turn on the ignition and select the following menu items on the Vehicle Diagnostic Tester :

♦ `01 - Engine Electronics`

♦ `Guided Functions`

♦ `01 - Engine Control Module Replacing`

6.1.2 Engine Control Module - J623- with Protective Housing, Removing and Installing

Special tools and workshop equipment required

♦ Wiring Harness Repair Set - Hot Air Blower - VAS1978/14A- with nozzle attachment from the Wiring Harness Repair Set - VAS1978B- .

♦ Mini-grinder, commercially available

♦ Vehicle Diagnostic Tester

Caution

This procedure contains mandatory replaceable parts. Refer to component overview prior to starting procedure.

Mandatory Replacement Parts

♦ Bolts - Shear, Protective Housing

Removing

– Turn on the ignition and select the following menu items on the Vehicle Diagnostic Tester :

♦ `01 - Engine Electronics`

♦ `Guided Functions`

♦ `01 - Engine Control Module Replacing`

– Turn off the ignition and remove the key.

Note

Touching the engine control module with the battery positive terminal damages the engine control module. For this reason the battery must be disconnected before removing the engine control module from its mount. Refer to ⇒ Electrical Equipment; Rep. Gr. 27 ; Battery; Battery, Disconnecting and Connecting .

Remove the shear bolts -arrows- to remove the protective housing -1- as follows:

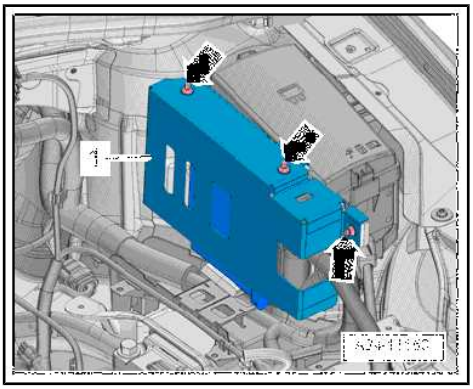

– Make a recess in the head of the shear bolt -1- for a screwdriver. Use a mini-grinder -2- to make the recess.

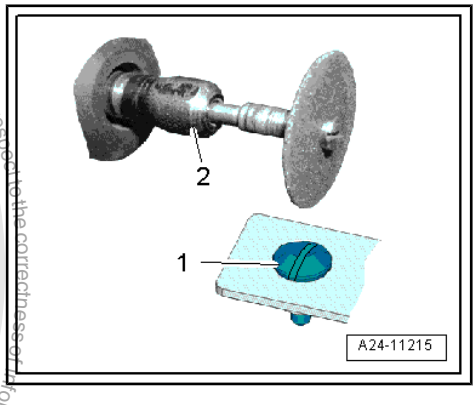

Note

The shear bolts were installed with a locking fluid. For this reason, the threads must be heated with the heat gun to remove both bolts.

– Adjust the settings on the hot air gun as shown. That means the temperature potentiometer -2- set to maximum heat and the two-stage airflow switch -3- set to level 3.

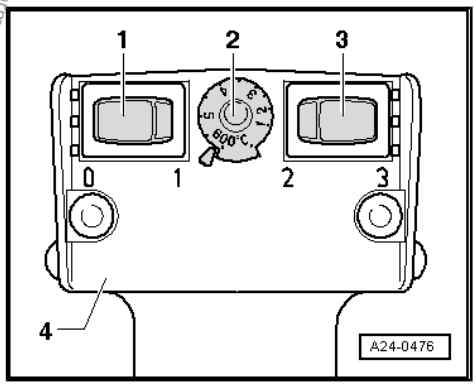

NOTICE

Risk of damaging the surrounding components using the hot air gun. Overheating is possible.

– **If necessary, cover the surrounding components.**

– Warm the head of the shear bolt -1- for 20 to 30 seconds.

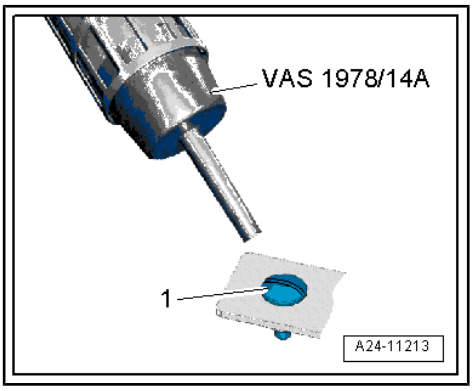

Commercial purposes, in part or in whole, is not permitted unless authorised by Volkswagen AG. Volkswagen AG does not guarantee or accept any liability with respect to the correctness of information in this document. Copyright by Volkswagen AG.

– Remove the shear bolt -1- with a screwdriver -2-.

– Remove the protective housing from the Engine Control Module - J623- .

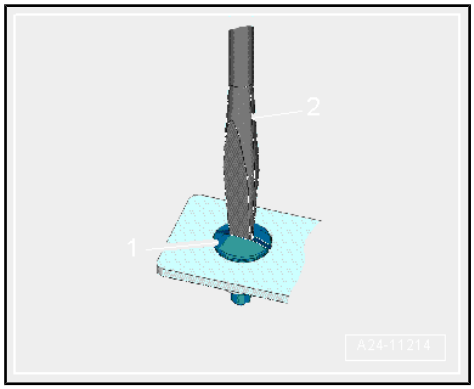

– Release the retainers in direction of -arrow A- and remove the Engine Control Module - J623- in direction of -arrow B-.

– Unlock and disconnect the connectors from the Engine Control Module - J623- .

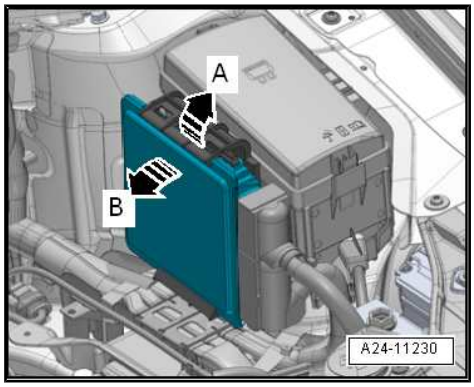

Installing

Install in reverse order of removal. Note the following:

– Place the Engine Control Module - J623- in the bracket with the lower edge forward in direction of -arrow A- and locked on the upper edge.

– Engine Control Module - J623- must be installed again with protective housing.

– Clean any locking fluid still in the threaded holes for the shear bolt. Cleaning can be performed with a thread cutter (tap).

– Always use new shear bolts.

– Connect the battery. Refer to ⇒ Electrical Equipment; Rep. Gr. 27 ; Battery; Battery, Disconnecting and Connecting .

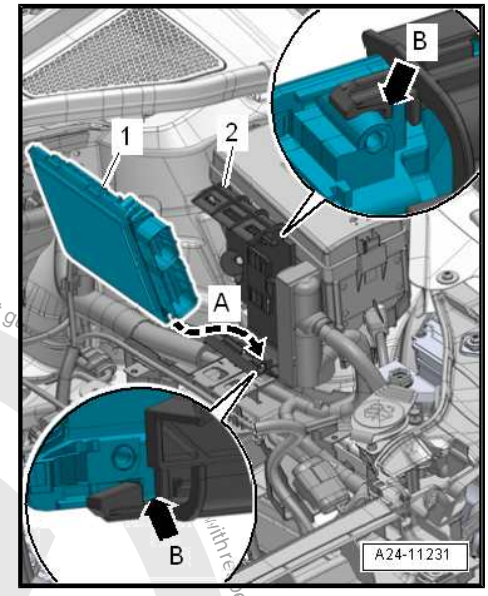

Perform the Following after Installing a New ECM

– Turn on the ignition and select the following menu items on the Vehicle Diagnostic Tester :

- ♦ 01 - Engine Electronics
- ♦ Guided Functions
- ♦ 01 - Engine Control Module Replacing

Protected by copyright. Copying for private or commercial purposes, in part or in whole, is not permitted unless authorised by Volkswagen AG. Volkswagen AG does not guarantee or accept any liability with respect to the correctness of information in this document. Copyright by Volkswagen AG.

7 High Pressure Pump

⇒ “7.1 Overview - High Pressure Pump”, page 325 .

⇒ “7.2 High Pressure Pump, Removing and Installing”, page 328 .

7.1 Overview - High Pressure Pump

⇒ “7.1.1 Overview - High Pressure Pump, Vehicles without Intake-Manifold Fuel Injection”, page 325 .

7.1.1 Overview - High Pressure Pump, Vehicles without Intake-Manifold Fuel Injection

Volkswagen AG. Volkswagen AG does not guarantee or accept any liability with

CAUTION

Fuel system is under high pressure.
Risk of injury from fuel spraying out.
– Reducing the fuel high pressure.

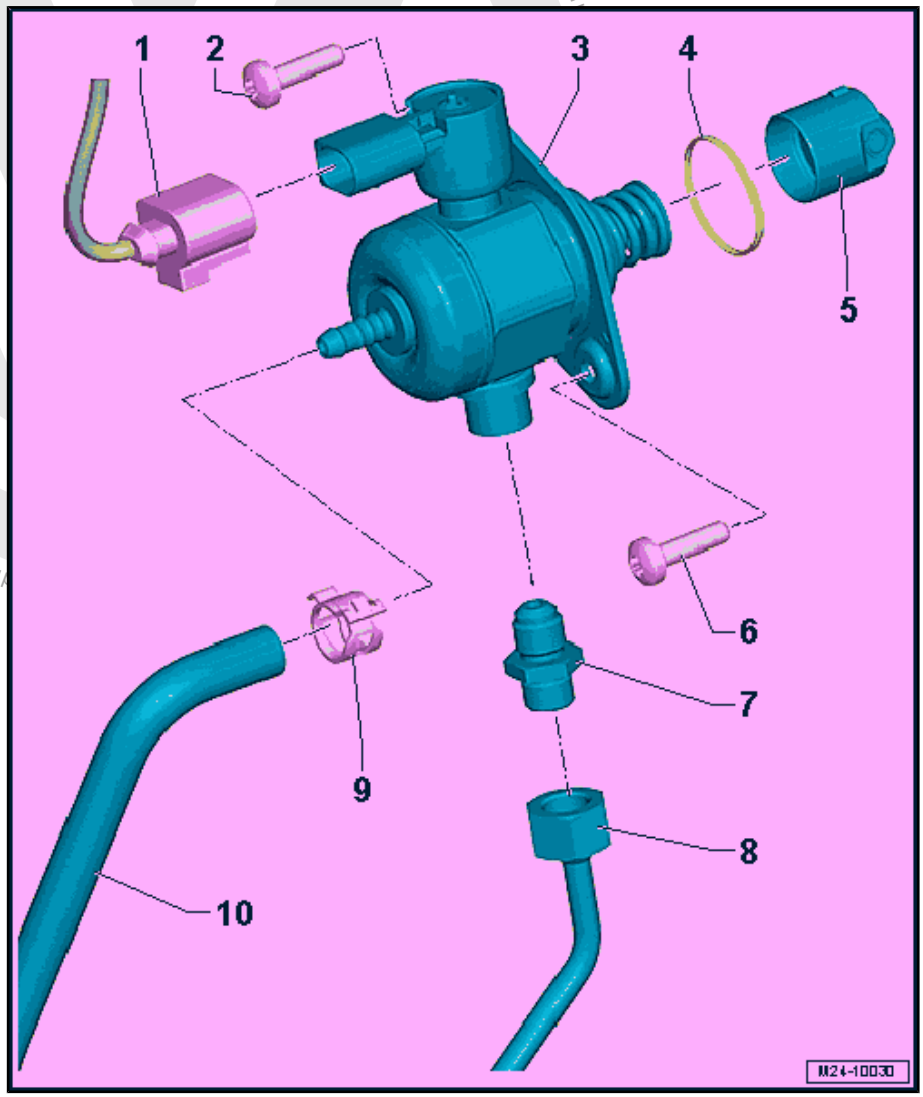

1 - Connector
- For Fuel Pressure Regulator Valve - N276-

2 - High Pressure Pump Bolt
- 8 Nm + 90° turn
- Replace after removing
- Tighten by hand

3 - High Pressure Pump
- There is an electric fuel pump located in the fuel tank that supplies the fuel to the mechanical high pressure pump.
- When installing, make sure that no dirt enters the fuel system.
- The fuel system must be without pressure, release fuel pressure. Refer to ⇒ “1.2 High Fuel Pressure, Reducing”, page 283 .
- Install the fuel lines free of tension
- Inspect the O-ring, and replace if damaged
- With Fuel Pressure Regulator Valve - N276-
- Removing and installing. Refer to ⇒ “7.2 High Pressure Pump, Removing and

Installing", page 328 .

4 - O-Ring

- ❑ Replace if damaged

5 - Roller Tappet

- ❑ Remains inserted in the vacuum pump after removing the high pressure pump

6 - High Pressure Pump Bolt

- ❑ 8 Nm + 90° turn
- ❑ Replace after removing
- ❑ Tighten by hand

7 - Fuel Supply Line Connection

- ❑ 30 Nm
- ❑ Replace after removing
- ❑ When loosening the high pressure line, secure the connection from turning.

8 - Fuel Supply Line

- ❑ 27 Nm
- ❑ For the fuel injector fuel rail
- ❑ Lubricate the fuel supply line ball with engine oil
- ❑ Install fuel supply line free of stress

9 - Spring Clamp

- ❑ Replace if damaged

10 - Fuel Supply Line

- ❑ Coming from the fuel tank

7.1.2 Overview - High Pressure Pump, Vehicles with Intake-Manifold Fuel Injection

⚠ CAUTION

Fuel system is under high pressure.
Risk of injury from fuel spraying out.
– Reducing the fuel high pressure.

Protected by copyright. Copyright by Volkswagen AG. Volkswagen AG does not guarantee or accept any liability with respect to the correctness of information in this document. Copyright by Volkswagen AG.

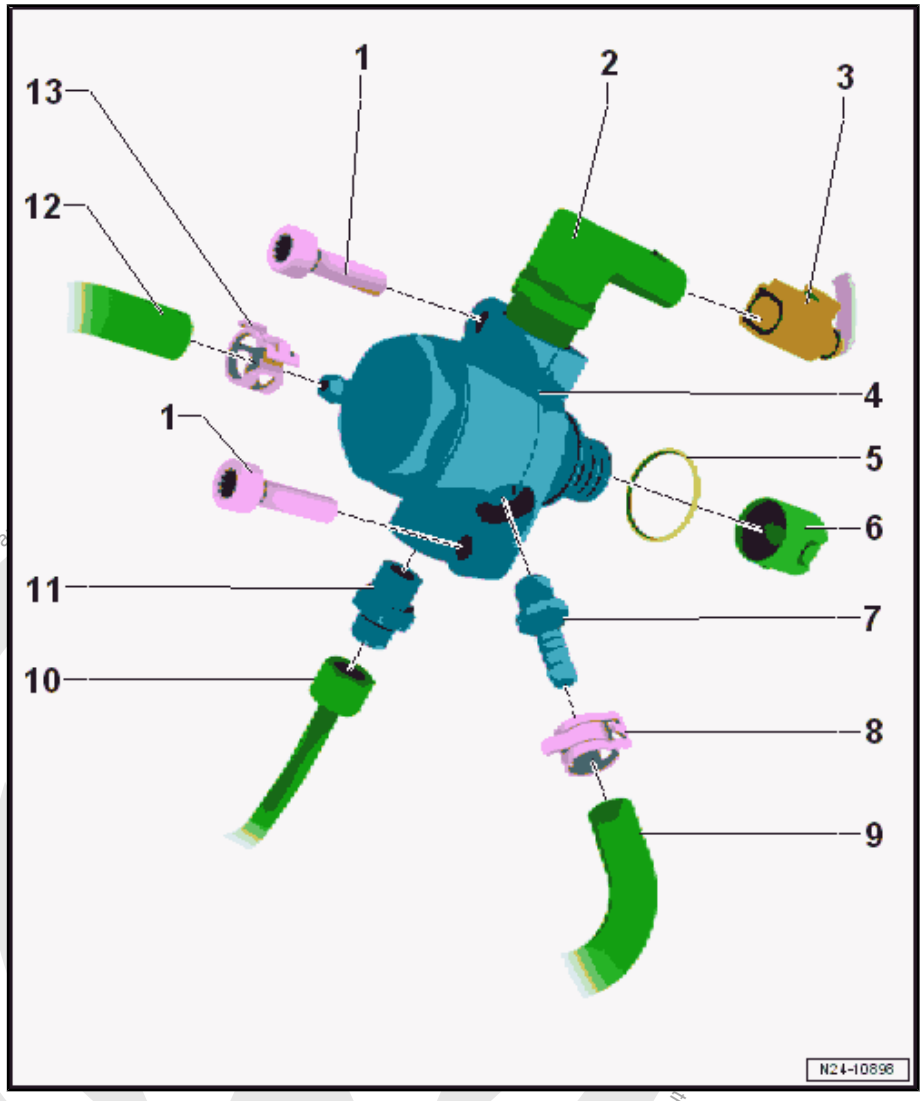

1 - High Pressure Pump Bolts

- ❑ 20 Nm
- ❑ Replace after removing
- ❑ Tighten uniformly

2 - Fuel Pressure Regulator Valve - N276-

3 - Connector

- ❑ For Fuel Pressure Regulator Valve - N276-

4 - High Pressure Pump

- ❑ There is an electric fuel pump located in the fuel tank that supplies the fuel to the mechanical high pressure pump.
- ❑ When installing, make sure that no dirt enters the fuel system.
- ❑ The fuel system must be without pressure, releasing fuel pressure. Refer to ⇒ “1.2 High Fuel Pressure, Reducing”, page 283
- ❑ Install the fuel lines free of tension
- ❑ Inspect the O-ring, and replace if damaged
- ❑ Removing and installing. Refer to ⇒ “7.2 High Pressure Pump, Removing and Installing”, page 328 .

5 - O-Ring

- ❑ Replace if damaged

6 - Roller Tappet

- ❑ Installation position: the roller points to the camshaft
- ❑ Remains inserted in the vacuum pump after removing the high pressure pump

7 - Fuel Line Connections

- ❑ 20 Nm

8 - Spring Clamp

- ❑ Replace after removing

9 - Fuel Line

- ❑ To the fuel rail intake manifold fuel injectors

10 - High Pressure Line

- ❑ 20 Nm
- ❑ To the combustion chamber fuel injectors fuel rail
- ❑ Lubricate the high pressure line with engine oil
- ❑ Do not install the high pressure line with tension. Make sure it is clean.

11 - High Pressure Line Connection

- ❑ 30 Nm
- ❑ When loosening the high pressure line, secure the connection from turning.

Protected by copyright. Copying for private or commercial purposes, in part or in whole, is not permitted unless authorized by Volkswagen AG.

❑ If the connection was loosened, it must be replaced.

12 - Fuel Supply Line

13 - Spring Clamp

❑ Replace after removing

7.2 High Pressure Pump, Removing and Installing

Special tools and workshop equipment required

- Flare Nut Attachment - 17mm - T10456-

Caution

This procedure contains mandatory replaceable parts. Refer to component overview prior to starting procedure.

Mandatory Replacement Parts

- Bolts - High Pressure Pump

Note

- *Only remove the high pressure pump when the engine is cold.*
- *Pay attention when installing the high pressure pump, that no dirt enters the fuel system.*
- *Collect escaping fuel with a rag.*
- *Inspect the O-ring for the high pressure pump, and replace it if damaged.*
- *If the connection for the high pressure line -item 11- ⇒ Item 11 (page 327) was loosened, it must be replaced.*
- *Lubricate the high pressure line with engine oil and always fasten them free of tension.*
- *Vehicles with the engine codes CNTA do not have an intake manifold-fuel injector.*

CAUTION

Fuel system is under high pressure.
Risk of injury from fuel spraying out.
– Reducing the fuel high pressure.

Removing

– Remove the engine cover. Refer to ⇒ “3.1 Engine Cover, Removing and Installing”, page 38 .

– Remove the air filter housing -3-. Refer to ⇒ “3.2 Air Filter Housing, Removing and Installing”, page 294 .

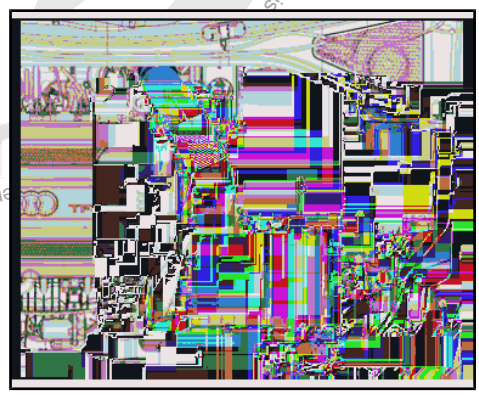

Protected by copyright. Copyright by Volkswagen AG. Volkswagen AG does not guarantee or accept any liability with respect to the correctness of information in this document. Copying for private or commercial purposes, in part or in whole, is not permitted unless authorised by Volkswagen AG.

– Free up the wiring harness -1 and 2- from the air guide pipe.
– Loosen the screw-type clamp -3-.
– Remove the bolts -arrows-.

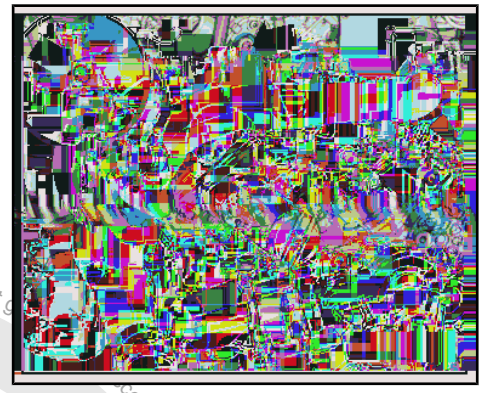

– Loosen the hose clamp -arrow- and remove the left charge air hose -1- with the air guide pipe downward.

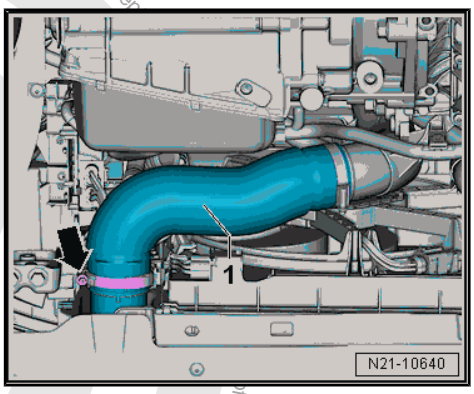

– Release the retainers -arrow-, remove the wiring duct upward from the bracket and move it towards the front.
– Remove the bolts -1, 2 and 3-.

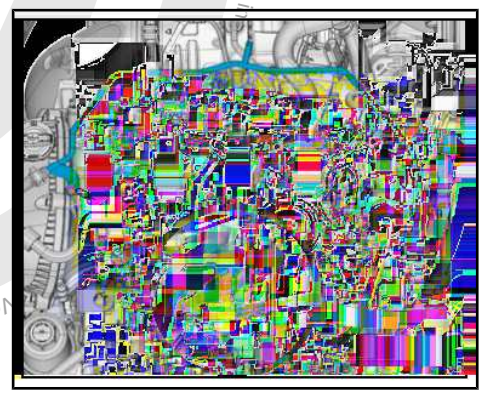

– Remove the pipe clamp -arrow-.

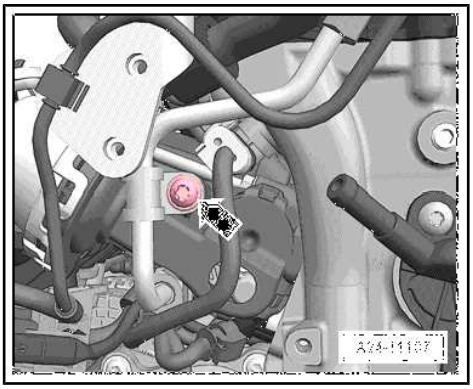

Protected by copyright. Copying for private or commercial purposes, in part or in whole, is not permitted unless authorised by Volkswagen AG. Volkswagen AG does not g

– Loosen the union nut on the fuel rail -arrow- with the Flare Nut Attachment - 17mm - T10456- .

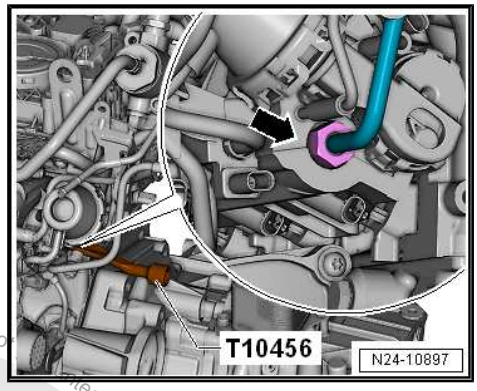

– Counterhold on the hex fitting -A- and loosen the union nut -arrow-. Remove the high pressure line.

– Disconnect the connector -1- from the Fuel Pressure Regulator Valve - N276-

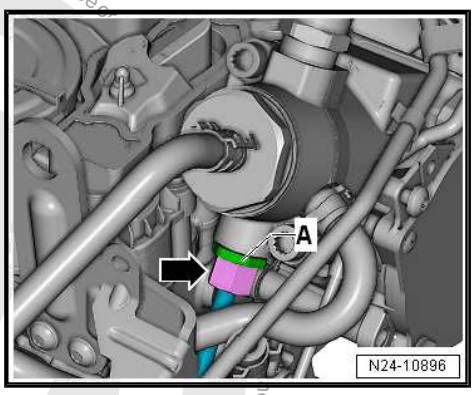

Vehicles with Intake-Manifold Fuel Injection

– Remove the fuel hose -3-.

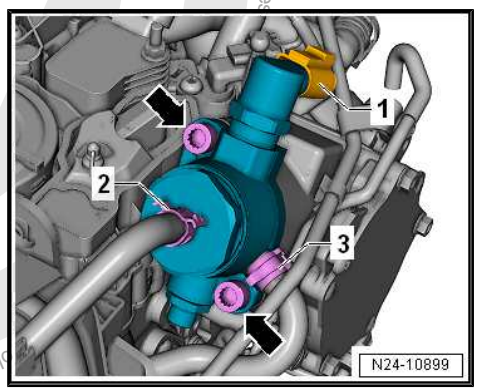

For All Vehicles

– Remove the fuel hose -2-.

– Remove the bolts -arrows-.

– Carefully remove the high pressure pump. The roller tappet can possibly remain in the vacuum pump.

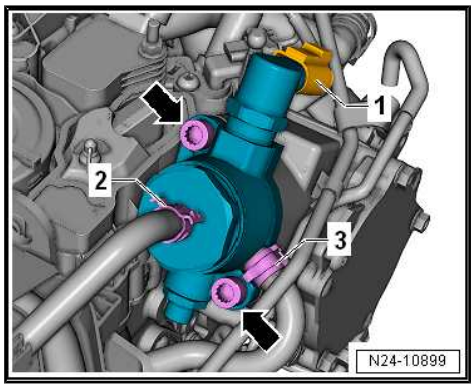

Protected by copyright. Copying for private or commercial purposes, in part or in whole, is not permitted unless authorised by Volkswagen AG. Volkswagen AG does not

Installing

– Replace the high pressure pump O-ring if damaged.

– Inspect the roller tappet for damages before installing and replace if necessary.

– Insert the roller tappet into the vacuum pump as shown.

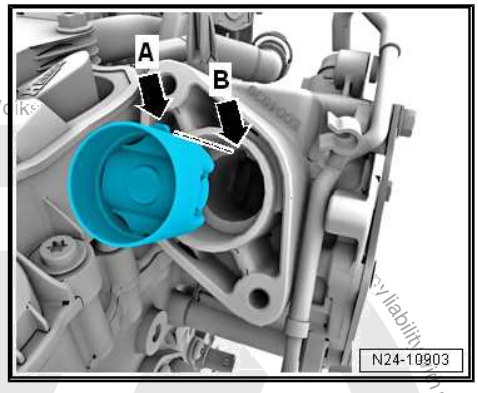

Note

♦ *To insert the high pressure pump, the roller tappet must be at its lowest point.*

♦ *If the connection for the high pressure line -item 11- ⇒ Item 11 (page 327) was loosened, it must be replaced.*

– Rotate the crankshaft until the roller tappet is at the lowest point.

– Insert the high pressure pump in the vacuum pump.

– Tighten the bolts -arrows- by hand in a diagonal sequence.

– Tighten the bolts diagonally to the tightening specification. For the tightening specifications. Refer to ⇒ “7.1 Overview - High Pressure Pump”, page 325 .

– Attach the fuel hoses -2 and 3- if equipped and secure with the spring clamp.

– Connect the connector -1- to the Fuel Pressure Regulator Valve - N276- .

– Coat the high pressure line ball with engine oil and install the high pressure line. Tighten the union nut hand-tight and align the high pressure line free of tension.

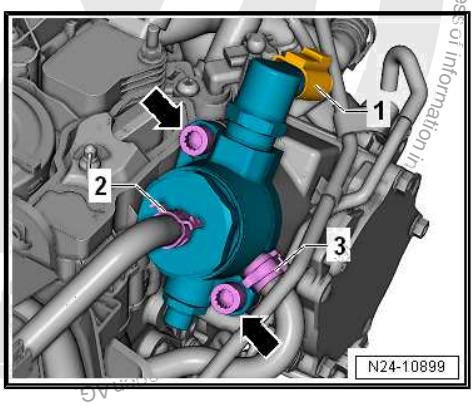

– Tighten the union nut on the fuel rail -arrow- with the Flare Nut Attachment - 17mm - T10456- .

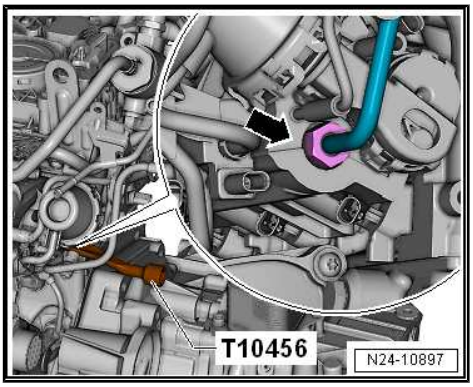

– Counterhold on the hex fitting -A- and tighten the union nut -arrow-.

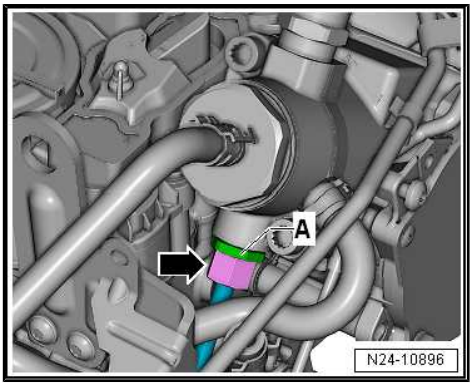

Protected by copyright. Copying for private or commercial purposes, in part or in whole, is not permitted unless authorised by Volkswagen AG. Volkswagen AG does not guarantee or accept any liability with respect to the correctness of information in this document. Copyright by Volkswagen AG.

– Install the pipe clamp -arrow-.

Assemble in reverse order of disassembly.

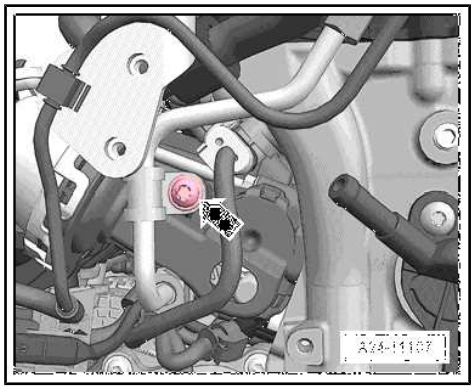

Note

Check the fuel system for leaks after completing all work.

Tightening Specifications

♦ Refer to ⇒ “7.1 Overview - High Pressure Pump”, page 325 .

Protected by copyright. Copying for private or commercial purposes, in part or in whole, is not permitted unless authorised by Volkswagen AG. Volkswagen AG does not guarantee or accept any liability with respect to the correctness of information in this document. Copyright by Volkswagen AG.

8 Heated Oxygen Sensor

⇒ “8.1 Overview - Heated Oxygen Sensor”, page 333 .

⇒ “8.2 Oxygen Sensor 1 before Catalytic Converter GX10 , Removing and Installing”, page 333 .

⇒ “8.3 Oxygen Sensor 1 after Catalytic Converter GX7 , Removing and Installing”, page 334 .

8.1 Overview - Heated Oxygen Sensor

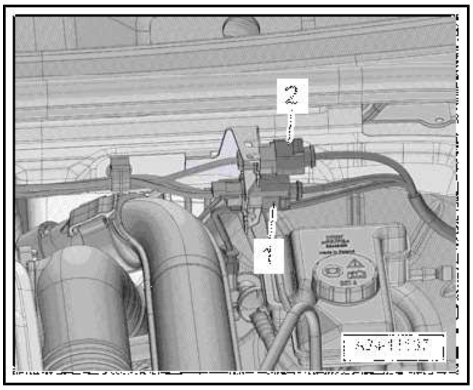

Oxygen Sensor Electrical Connectors

1 - Oxygen Sensor 1 after Catalytic Converter - GX7- connector

2 - Oxygen Sensor 1 before Catalytic Converter - GX10- connector

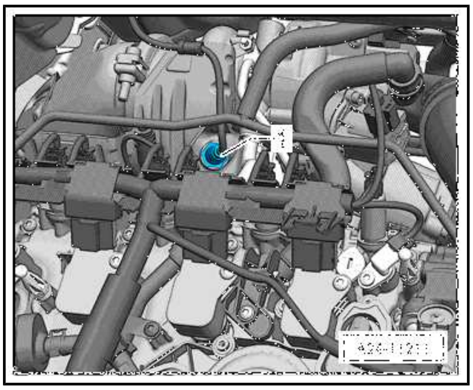

Oxygen Sensor 1 before Catalytic Converter - GX10- -1-

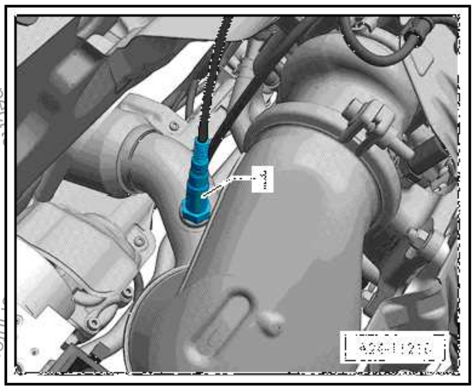

Oxygen Sensor 1 after Catalytic Converter - GX7- -1-

Tightening Specifications

Component	Tightening Specification
Heated Oxygen Sensor	55 Nm

Note

- *Coat new oxygen sensors with an assembly paste. This paste must not come into contact with oxygen sensor slots.*
- *For a used oxygen sensor, only coat threads with hot bolt paste. This paste must not come into contact with oxygen sensor slots. Hot bolt paste. Refer to the Parts Catalog*
- *The oxygen sensor wire must always be attached at the same location when installing. Do not let the electrical wire connection come in contact with the exhaust pipe.*

Protected by copyright. Copying for private or commercial purposes, in part or in whole, is not permitted unless authorised by Volkswagen AG. Volkswagen AG does not guarantee or accept any liability with respect to the correctness of information in this document. Copyright by Volkswagen AG.

8.2 Oxygen Sensor 1 before Catalytic Converter - GX10- , Removing and Installing

Special tools and workshop equipment required

- Ring Wrench 7-Piece Set - 3337-

The Oxygen Sensor 1 before Catalytic Converter - GX10- is composed of:

- Heated Oxygen Sensor - G39-
- Oxygen Sensor Heater - Z19-

Removing

– Disconnect the connector -2- of the Oxygen Sensor 1 before Catalytic Converter - GX10- .

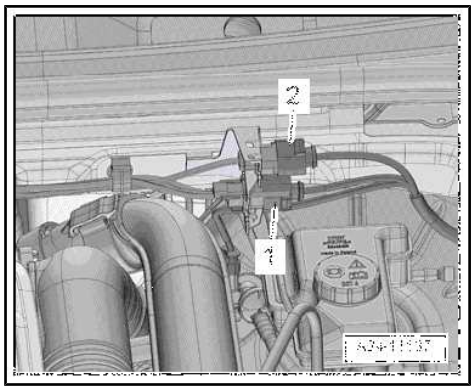

– Remove the Oxygen Sensor 1 before Catalytic Converter - GX10- -1- using a tool from the Ring Wrench 7-Piece Set - 3337- .

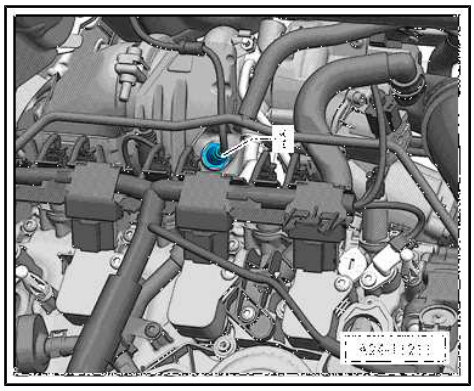

Installing

Note the following when installing:

Note

- *Coat new oxygen sensors with an assembly paste. This paste must not come into contact with oxygen sensor slots.*
- *For a used oxygen sensor, only coat threads with hot bolt paste. This paste must not come into contact with oxygen sensor slots. Hot bolt paste. Refer to the Parts Catalog.*
- *The oxygen sensor wire must always be attached at the same location when installing. Do not the electrical wire connection come in contact with the exhaust pipe.*

Tightening Specifications

- Refer to
➤ “8.1 Overview - Heated Oxygen Sensor”, page 333 .

8.3 Oxygen Sensor 1 after Catalytic Converter - GX7- , Removing and Installing

The Oxygen Sensor 1 after Catalytic Converter - GX7- is composed of:

- Oxygen Sensor after Three Way Catalytic Converter - G130-
- Heater For Oxygen Sensor 2 after Catalytic Converter - Z30-

Special tools and workshop equipment required

- Ring Wrench 7-Piece Set - 3337-

Protected by copyright. Copying for private or commercial purposes, in part or in whole, is not permitted unless authorized by Volkswagen AG. Volkswagen AG does not guarantee or accept any liability with respect to the correctness of information in this document. Copyright by Volkswagen AG.

Removing

– Disconnect the Oxygen Sensor 1 after Catalytic Converter - GX7- connector -1-.

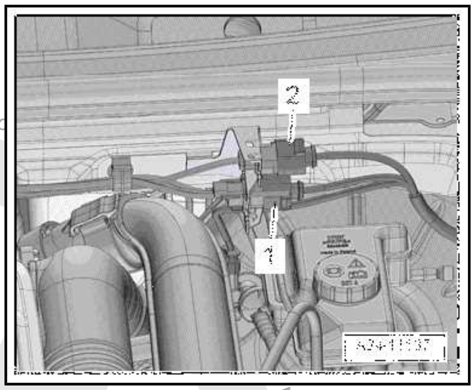

– Remove the Heated Oxygen Sensor -1- using a tool from the Ring Spanner 7-Piece Set - 3337- .

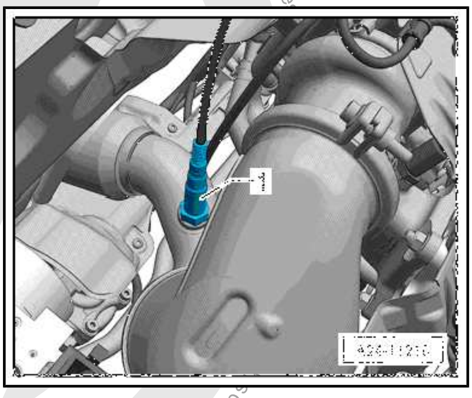

Installing

Note the following when installing:

Note

- *Coat new oxygen sensors with an assembly paste. This paste must not come into contact with oxygen sensor slots.*
- *For a used oxygen sensor, only coat threads with hot bolt paste. This paste must not come into contact with oxygen sensor slots. Hot bolt paste. Refer to the Parts Catalog.*
- *The oxygen sensor wire must always be attached at the same location when installing. Do not the electrical wire connection come in contact with the exhaust pipe.*

Tightening Specifications

- Refer to ⇒ “8.1 Overview - Heated Oxygen Sensor”, page 333 .

9 Special Tools

Special tools and workshop equipment required

- Elbow Assembly Tool - T10118-

- Injector/Combustion Chamber Seal Tool Set - T10133C-

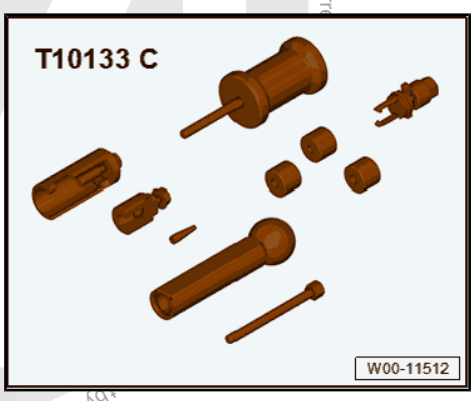

- Torx Socket - T30 - T10347-

- Flare Nut Attachment - 17mm - T10456-

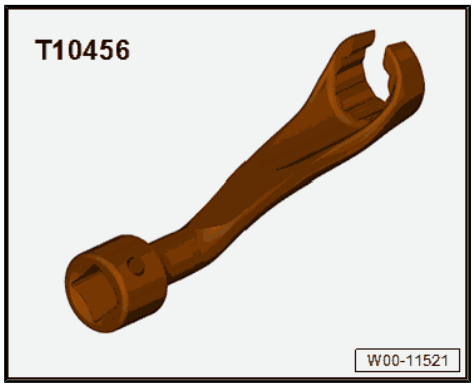

Protected by copyright. Copying for private or commercial purposes, in part or in whole, is not permitted unless authorised by Volkswagen AG. Volkswagen AG does not

- Socket - 27mm - T40218-

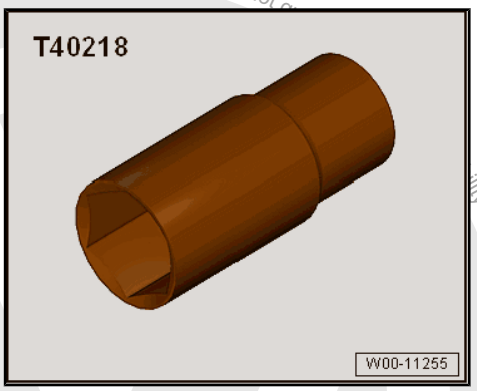

- Wiring Harness Repair Set - Hot Air Blower - VAS1978/14A- -1- with nozzle attachment -2- from the Wiring Harness Repair Set - VAS1978B- .

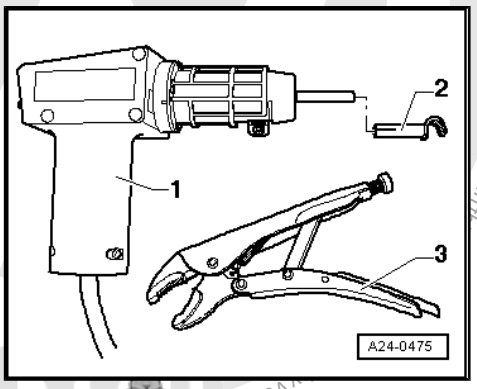

- Ring Wrench 7-Piece Set - 3337-

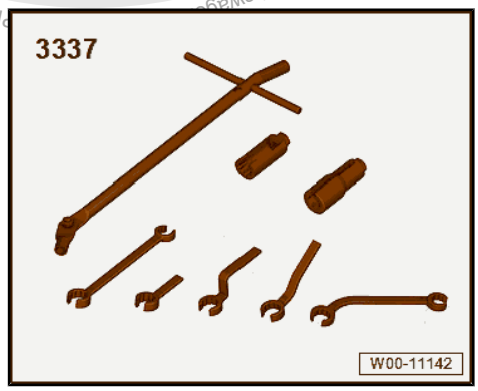

- Not Illustrated:
- Ultrasonic Cleaning Unit - VAS6418-
- Mounting Plate for Injection Modules - VAS6418/1-
- Cleaning Fluid - VAS6418/2-
- Pressure Sensor Tester - VAS6394-
- Adapter - VAS6394/2-
- Vehicle Diagnostic Tester - Test Adapter - 3 Pin - VAS5570-
- Torque Wrench 1331 5-50Nm - VAG1331-
- Vehicle Diagnostic Tester

26 – Exhaust System, Emission Controls

1 Exhaust Pipes/Mufflers

⇒ “1.1 Overview - Muffler”, page 338
⇒ “1.2 Exhaust Pipes/Mufflers, Separating”, page 342
⇒ “1.3 Muffler, Removing and Installing”, page 343
⇒ “1.4 Exhaust System, Installing without Tension”, page 345
⇒ “1.5 Exhaust System, Checking for Leaks”, page 346
⇒ “1.6 Clamping Sleeve Installation Position”, page 347

1.1 Overview - Muffler

⇒ “1.1.1 Overview - Muffler, Golf with 2.0L Engine ”, page 338
⇒ “1.1.2 Overview - Muffler, Golf with 1.8L Engine ”, page 340
⇒ “1.1.3 Overview - Muffler, Golf Wagon”, page 341

Copyright by Volkswagen AG. Volkswagen AG does not guarantee or accept any liability with r

1.1.1 Overview - Muffler, Golf with 2.0L Engine

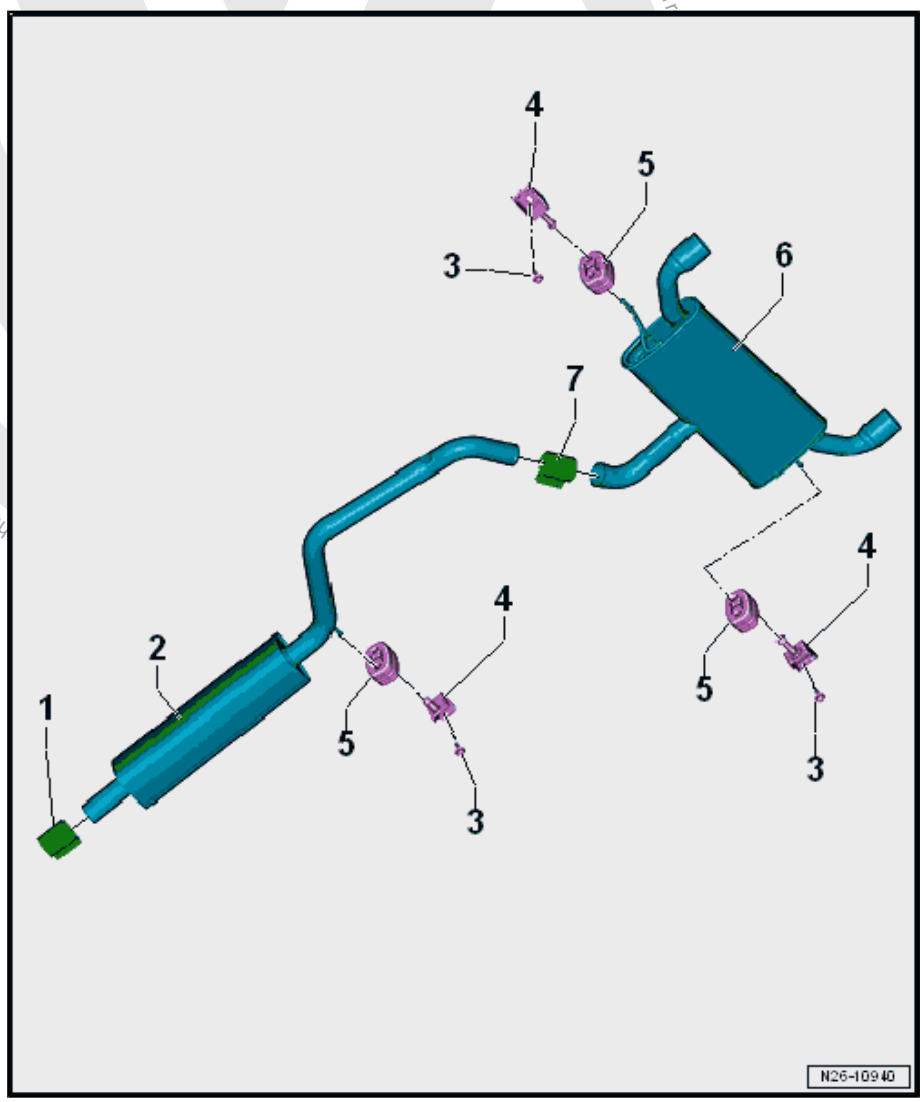

1 - Front Clamping Sleeve

- ❑ Before tightening, align exhaust system free of tension. Refer to ⇒ “1.4 Exhaust System, Installing without Tension”, page 345 .
- ❑ Tighten threaded connections evenly.
- ❑ Tightening specification. Refer to ⇒ Fig. ““Tightening Specification of Clamping Sleeve““ , page 347 .

2 - Center Muffler

- ❑ Original equipment as one unit with rear muffler. For repairs, replace each separately
- ❑ Removing and installing. Refer to ⇒ “1.3 Muffler, Removing and Installing”, page 343 .
- ❑ Separating point. Refer to ⇒ “1.2 Exhaust Pipes/Mufflers, Separating”, page 342 .
- ❑ Exhaust System, Installing without Tension. Refer to ⇒ “1.4 Exhaust System, Installing without Tension”, page 345 .

3 - Bolt

- ❑ 20 Nm

4 - Bracket

5 - Retaining Loop

- ❑ Replace if damaged

6 - Rear Muffler

- ❑ Original equipment as one unit with rear muffler. For repairs, replace each separately
- ❑ Removing and installing. Refer to ⇒ “1.3 Muffler, Removing and Installing”, page 343 .
- ❑ Separating point. Refer to ⇒ “1.2 Exhaust Pipes/Mufflers, Separating”, page 342 .
- ❑ Exhaust System, Installing without Tension. Refer to ⇒ “1.4 Exhaust System, Installing without Tension”, page 345 .

7 - Rear Clamping Sleeve

- ❑ Before tightening, align exhaust system free of tension. Refer to ⇒ “1.4 Exhaust System, Installing without Tension”, page 345 .
- ❑ Installed position. Refer to ⇒ Fig. ““Installation Position for Rear Clamping Sleeve”“ , page 347
- ❑ Tighten threaded connections evenly.
- ❑ Tightening specification. Refer to ⇒ Fig. ““Tightening Specification of Clamping Sleeve”“ , page 347 .

Protected by copyright. Copying for private or commercial purposes, in part or in whole, is not permitted unless authorised by Volkswagen AG. Volkswagen AG does not guarantee or accept any liability with respect to the correctness of information in this document. Copyright by Volkswagen AG.

1.1.2 Overview - Muffler, Golf with 1.8L Engine

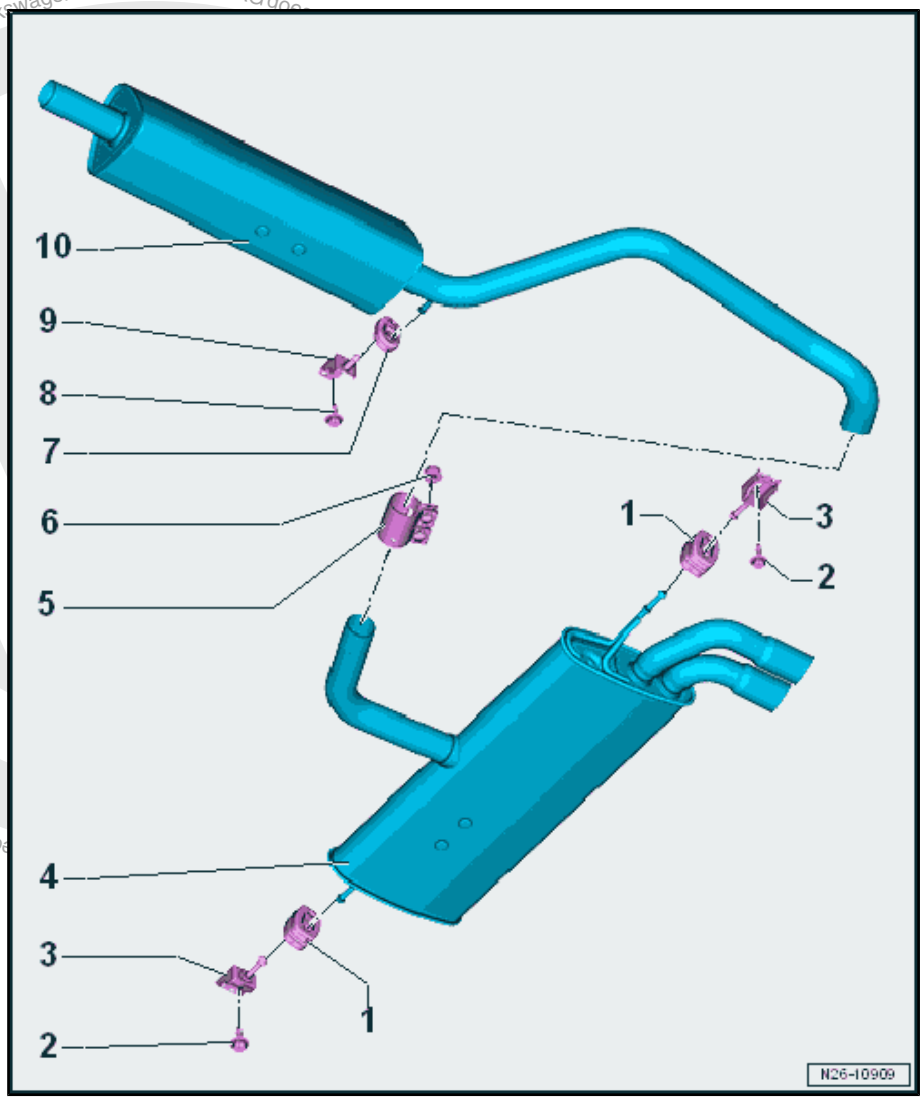

1 - Retaining Loop

- ❑ Replace if damaged

2 - Bolt

- ❑ 20 Nm

3 - Mount

- ❑ Replace if damaged

4 - Rear Muffler

- ❑ Original equipment as one unit with center muffler. For repairs, replace each separately
- ❑ Removing and installing. Refer to ⇒ "1.3 Muffler, Removing and Installing", page 343 .
- ❑ Separating the exhaust pipes/mufflers. Refer to ⇒ "1.2 Exhaust Pipes/ Mufflers, Separating", page 342 .
- ❑ Exhaust System, Installing without Tension. Refer to ⇒ "1.4 Exhaust System, Installing without Tension", page 345 .

5 - Rear Clamping Sleeve

- ❑ Before tightening, align exhaust system free of tension. Refer to ⇒ "1.4 Exhaust System, Installing without Tension", page 345 .
- ❑ Installed position. Refer to ⇒ "1.6 Clamping Sleeve Installation Position", page 347
- ❑ Tighten threaded connections evenly.

6 - Nut

- ❑ 30 Nm

7 - Retaining Loop

- ❑ Replace if damaged

8 - Bolt

- ❑ 20 Nm

9 - Mount

- ❑ Replace if damaged

10 - Center Muffler

- ❑ Original equipment as one unit with rear muffler. For repairs, replace each separately
- ❑ Removing and installing. Refer to ⇒ "1.3 Muffler, Removing and Installing", page 343 .
- ❑ Separating the exhaust pipes/mufflers. Refer to ⇒ "1.2 Exhaust Pipes/Mufflers, Separating", page 342 .
- ❑ Exhaust System, Installing without Tension. Refer to ⇒ "1.4 Exhaust System, Installing without Tension", page 345 .

1.1.3 Overview - Muffler, Golf Wagon

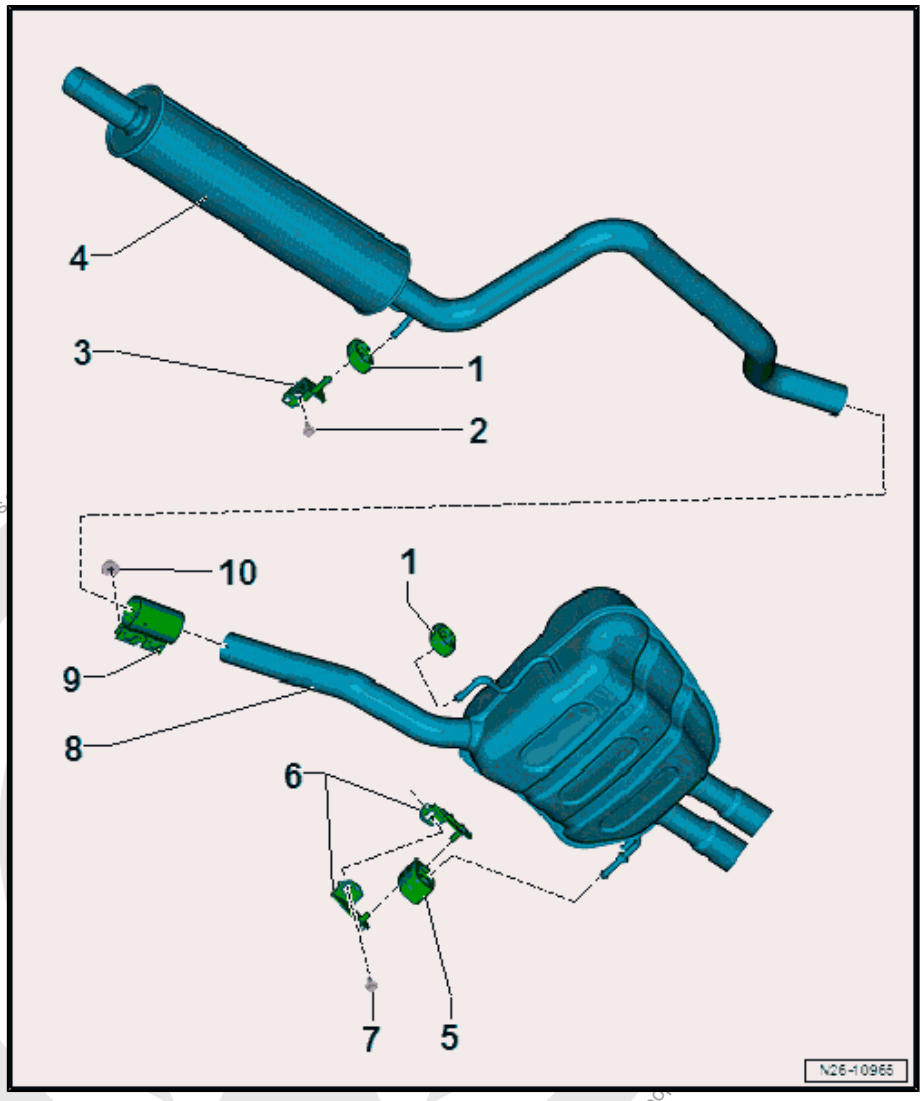

1 - Retaining Loop

- ❑ Replace if damaged

2 - Bolt

- ❑ 20 Nm

3 - Mount

- ❑ Replace if damaged

4 - Center Muffler

- ❑ Original equipment as one unit with rear muffler. For repairs, replace each separately
- ❑ Removing and installing. Refer to ⇒ “1.3 Muffler, Removing and Installing”, page 343 .
- ❑ Separating the exhaust pipes/mufflers. Refer to ⇒ “1.2 Exhaust Pipes/Mufflers, Separating”, page 342 .
- ❑ Exhaust System, Installing without Tension. Refer to ⇒ “1.4 Exhaust System, Installing without Tension”, page 345 .

5 - Retaining Loop

- ❑ Replace if damaged

6 - Mount

- ❑ Replace if damaged

7 - Bolt

- ❑ 20 Nm

8 - Rear Muffler

- ❑ Original equipment as one unit with center muffler. For repairs, replace each separately
- ❑ Removing and installing. Refer to ⇒ “1.3 Muffler, Removing and Installing”, page 343 .
- ❑ Separating the exhaust pipes/mufflers. Refer to ⇒ “1.2 Exhaust Pipes/Mufflers, Separating”, page 342 .
- ❑ Exhaust System, Installing without Tension. Refer to ⇒ “1.4 Exhaust System, Installing without Tension”, page 345 .

9 - Rear Clamping Sleeve

- ❑ Before tightening, align exhaust system free of tension. Refer to ⇒ “1.4 Exhaust System, Installing without Tension”, page 345 .
- ❑ Installed position. Refer to ⇒ “1.6 Clamping Sleeve Installation Position”, page 347
- ❑ Tighten threaded connections evenly.

10 - Nut

- ❑ 30 Nm

Document Copyright Volkswagen AG. Reproduction or copying for private or commercial purposes, in whole, is not permitted unless authorised by Volkswagen AG. All copyright

1.2 Exhaust Pipes/Mufflers, Separating

⇒ "1.2.1 Golf", page 342

⇒ "1.2.2 Golf Wagon", page 342

1.2.1 Golf

Special tools and workshop equipment required

- Chain Pipe Cutter - VAS6254-
- Pneumatic Body Saw - VAS6780-
- A separating point has been provided in the connecting pipe for individual replacement of the center or rear muffler.
- The separating point is marked by a depression around the circumference of the exhaust pipe.

Procedure

– Disconnect the exhaust pipe at the separating point -arrow- at a right angle using the Chain Pipe Cutter - VAS6254- or Pneumatic Body Saw - VAS6780- .

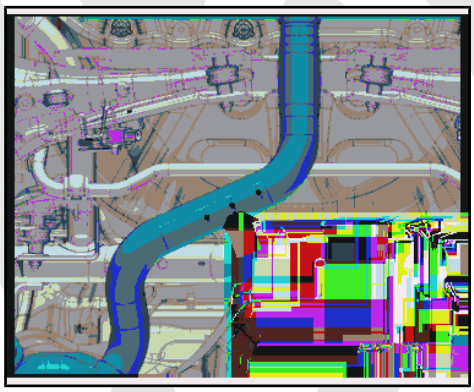

– When installing position the clamping sleeve -arrow- at the side markings.

– Note the installation position. Refer to ⇒ "1.6 Clamping Sleeve Installation Position", page 347 .

– Install the exhaust system free of tension. Refer to ⇒ "1.4 Exhaust System, Installing without Tension", page 345 .

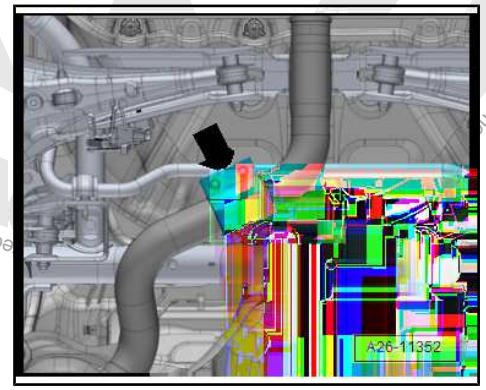

1.2.2 Golf Wagon

Special tools and workshop equipment required

- Chain Pipe Cutter - VAS6254-
- A separating point has been provided in the connecting pipe for individual replacement of the center or rear muffler.
- The separating point is marked by a depression around the circumference of the exhaust pipe.

Copyright. Copyright of private or commercial purposes, in part or in whole, is not permitted unless authorised by Volkswagen AG. Volkswagen AG does not guarantee or accept any liability with respect to the correctness of information in this document.

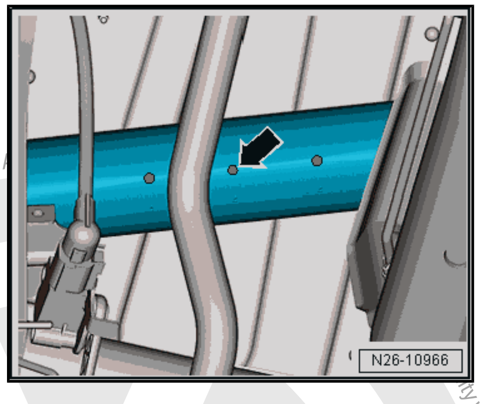

Procedure

– Separate the exhaust pipe at a right angle at the separating point -arrow- using a Chain Pipe Cutter - VAS6254- .

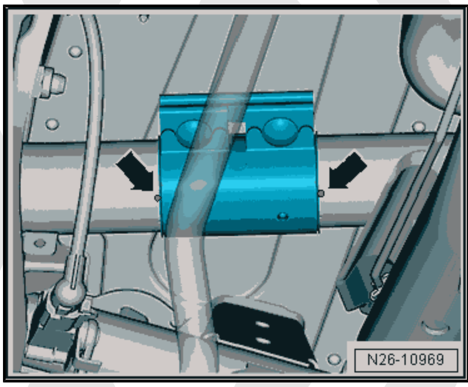

– When installing, position the clamping sleeve central to the side markings -arrows-.

– Install the rear clamping sleeve. Refer to ⇒ “1.6 Clamping Sleeve Installation Position”, page 347 .

– Install the exhaust system free of tension. Refer to ⇒ “1.4 Exhaust System, Installing without Tension”, page 345 .

1.3 Muffler, Removing and Installing

⇒ “1.3.1 Golf”, page 343

⇒ “1.3.2 Golf Wagon”, page 344

1.3.1 Golf

Removing

– If equipped, remove the left rear underbody panel. Refer to ⇒ Body Exterior; Rep. Gr. 66 ; Underbody Panel; Overview - Underbody Panels .

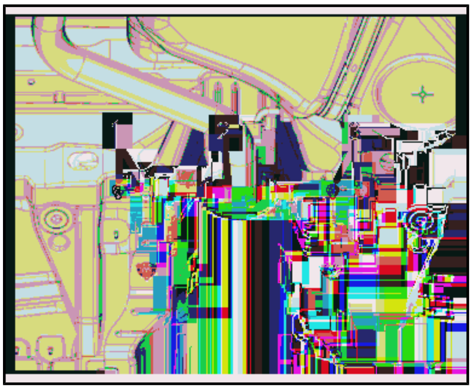

– Remove the rear tunnel brace -2-. Refer to ⇒ Body Exterior; Rep. Gr. 66 ; Underbody Panel; Overview - Underbody Panels .

Protected by copyright. Copying for private or commercial purposes, in part or in whole, is not permitted unless authorised by Volkswagen A... ty with respect to the correctness of information in this document. Copyright by Volkswagen AG.

– Loosen the screws for the front clamping sleeve -arrow-.

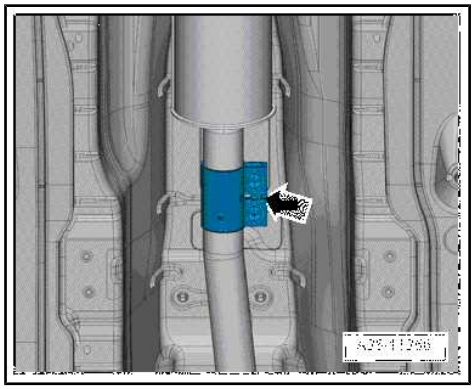

CAUTION

Risk of accident due to the heavy weight of the muffler.

– A second technician is required for the following work steps.

– Disengage the mount -1- or remove the bolt -item 3- ⇒ Item 3 (page 339) and remove the mount -2- from the body. Remove the muffler.

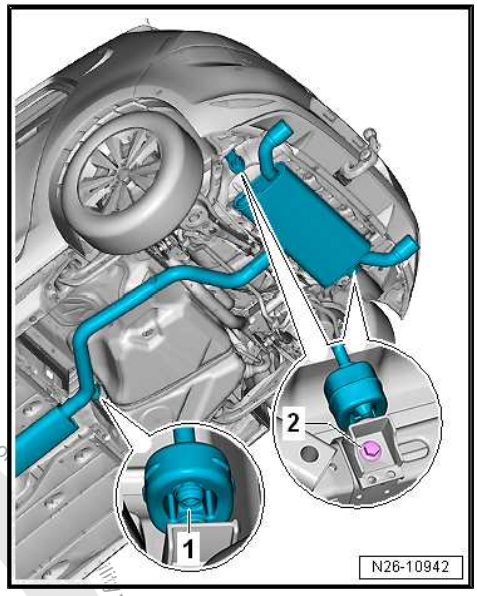

Installing

Install in reverse order of removal. Note the following:

– Install the exhaust system free of tension. Refer to ⇒ “1.4 Exhaust System, Installing without Tension”, page 345 .

Tightening Specifications

- Refer to ⇒ “1.1 Overview - Muffler”, page 338
- Refer to ⇒ Body Exterior; Rep. Gr. 66 ; Underbody Panel; Overview - Underbody Panels .

1.3.2 Golf Wagon

Removing

– If equipped, remove the left rear underbody panel. Refer to ⇒ Body Exterior; Rep. Gr. 66 ; Underbody Panel; Overview - Underbody Panels .

– Remove the rear tunnel brace -2-. Refer to ⇒ Body Exterior; Rep. Gr. 66 ; Underbody Panel; Overview - Underbody Panels .

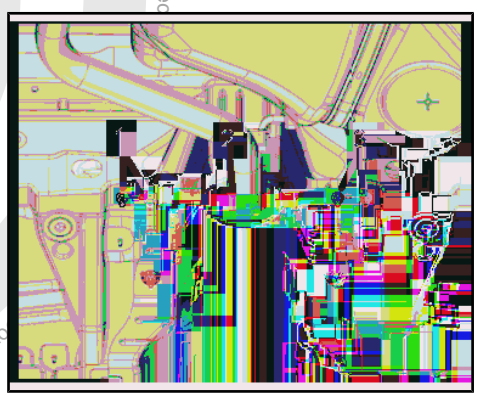

Protected by copyright. Copying for private or commercial purposes, in whole or in part, is not permitted unless authorised by Volkswagen AG. Volkswagen AG does not guarantee or assume liability with respect to the correctness of information in this document. Copyright by Volkswagen AG.

– Loosen the screws for the front clamping sleeve -arrow-.

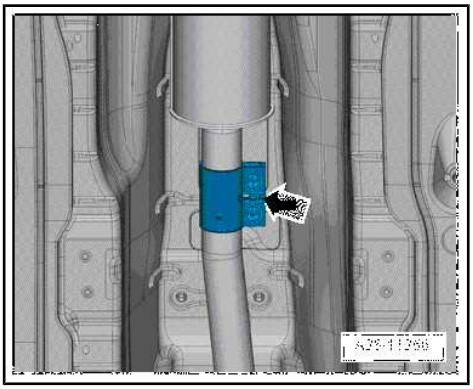

CAUTION

Risk of accident due to the heavy weight of the muffler.

– A second technician is required for the following work steps.

– Disconnect the exhaust pipe. Refer to
⇒ “1.2 Exhaust Pipes/Mufflers, Separating”, page 342 .

– Disengage the retaining loop -arrow-.

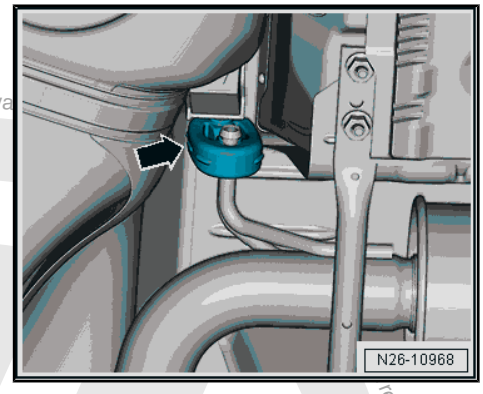

– Disengage the retaining loop -2- and remove the bolt -1-.

– Remove the muffler.

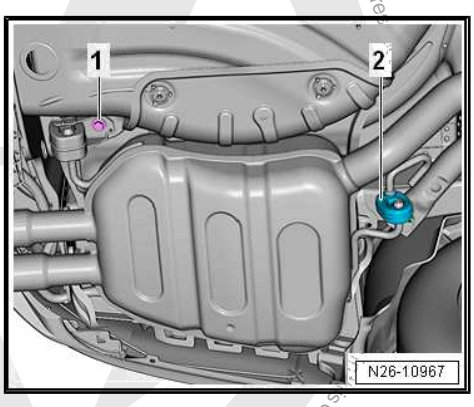

Installing

Install in reverse order of removal. Note the following:

– Install the exhaust system free of tension. Refer to
⇒ “1.4 Exhaust System, Installing without Tension”, page 345 .

Tightening Specifications

♦ Refer to ⇒ “1.1 Overview - Muffler”, page 338

♦ Refer to ⇒ Body Exterior; Rep. Gr. 66 ; Underbody Panel; Overview - Underbody Panels .

1.4 Exhaust System, Installing without Tension

Procedure

• Align the exhaust system when cold.

– Loosen the screws for the front clamping sleeve -arrow-.

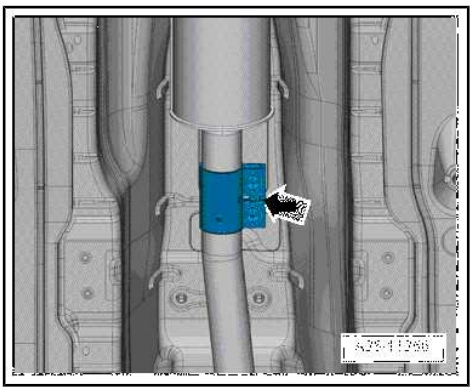

Protected by copyright. Copying for private or commercial purposes, in part or in whole, is not permitted unless authorised by Volkswagen AG. Volkswagen AG. Copyright by Volkswagen AG.

– Push the exhaust system far enough forward until the pre-load on the retaining loops at the exhaust pipe -a- = 5 mm.

– Install the rear clamping sleeve
⇒ “1.6 Clamping Sleeve Installation Position”, page 347 .

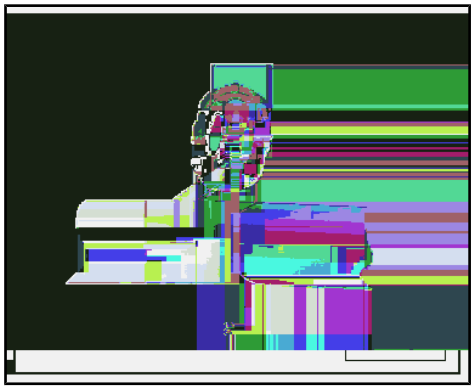

Tail Pipes, Aligning

– Align the rear muffler so that the distance -a and b- between the bumper opening and the tail pipes is the same.

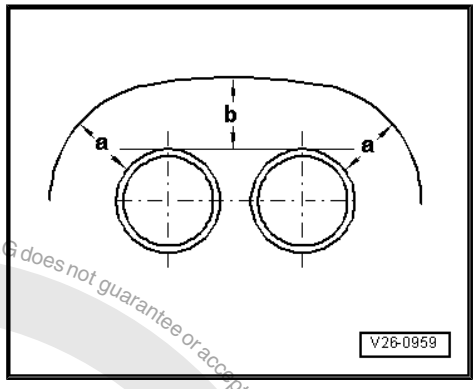

Vehicles with One Tail Pipe

– Align the rear muffler, so that the distance it is even between the bumper and the tail pipe.

All Vehicles

– Loosen the rear muffler suspended mount to align the tail pipes.

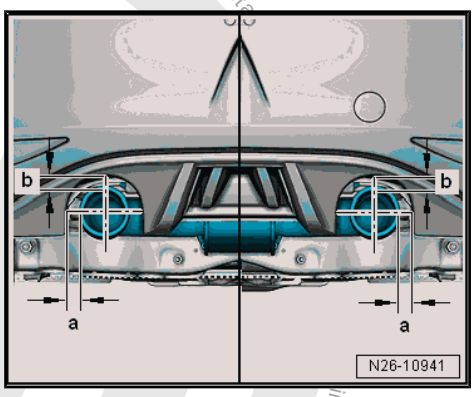

Tightening Specifications

♦ Refer to ⇒ “2.1 Overview - Emissions Control”, page 348

♦ Refer to ⇒ “1.1 Overview - Muffler”, page 338

1.5 Exhaust System, Checking for Leaks

– Start the engine and let it run at idle.

– Seal the tail pipes with cloths or plugs during the leakage test.

– Check for leaks where the exhaust manifold attaches to the cylinder head and where the turbocharger attaches to the front exhaust pipe.

– Repair detected leaks.

Protected by copyright. Copyright by Volkswagen AG. Volkswagen AG does not guarantee or accept any information in this document. Copyright by Volkswagen AG.

1.6 Clamping Sleeve Installation Position

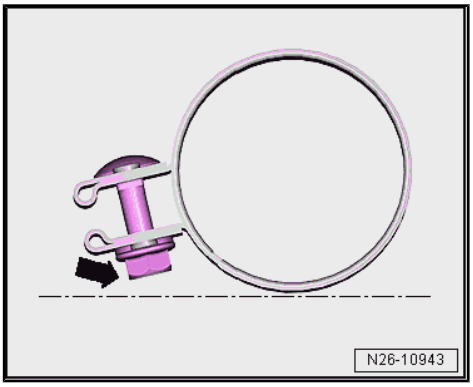

Installation Position for Rear Clamping Sleeve

– Install the clamping sleeve in the shown position.

- Threaded connections point left
- The threaded connection -arrows- must not project over the lower edge of the lock washer.

Tightening Specification of Clamping Sleeve

Clamping Sleeve	Tightening Specification
Clamping sleeve -A- with two individual clamps	25 Nm
Clamping sleeve -B- with continuous clamp.	30 Nm

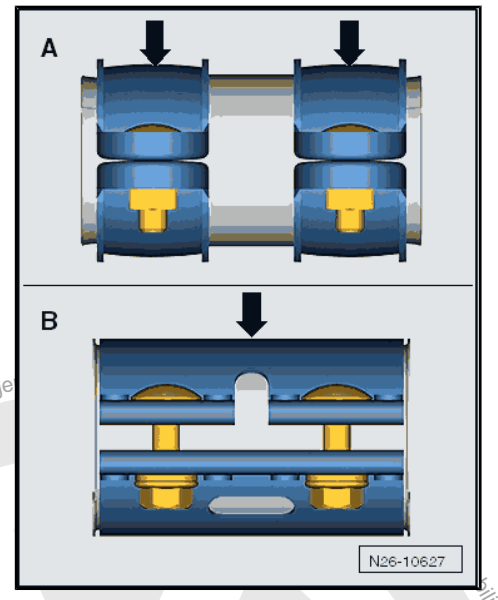

Protected by copyright. Copying for private or commercial purposes, in part or in whole, is not permitted unless authorised by Volkswagen AG. Copyright by Volkswagen AG. No liability with respect to the correctness of information in this document.

2 Emissions Control

⇒ “2.1 Overview - Emissions Control”, page 348 .

⇒ “2.2 Catalytic Converter, Removing and Installing”, page 349 .

2.1 Overview - Emissions Control

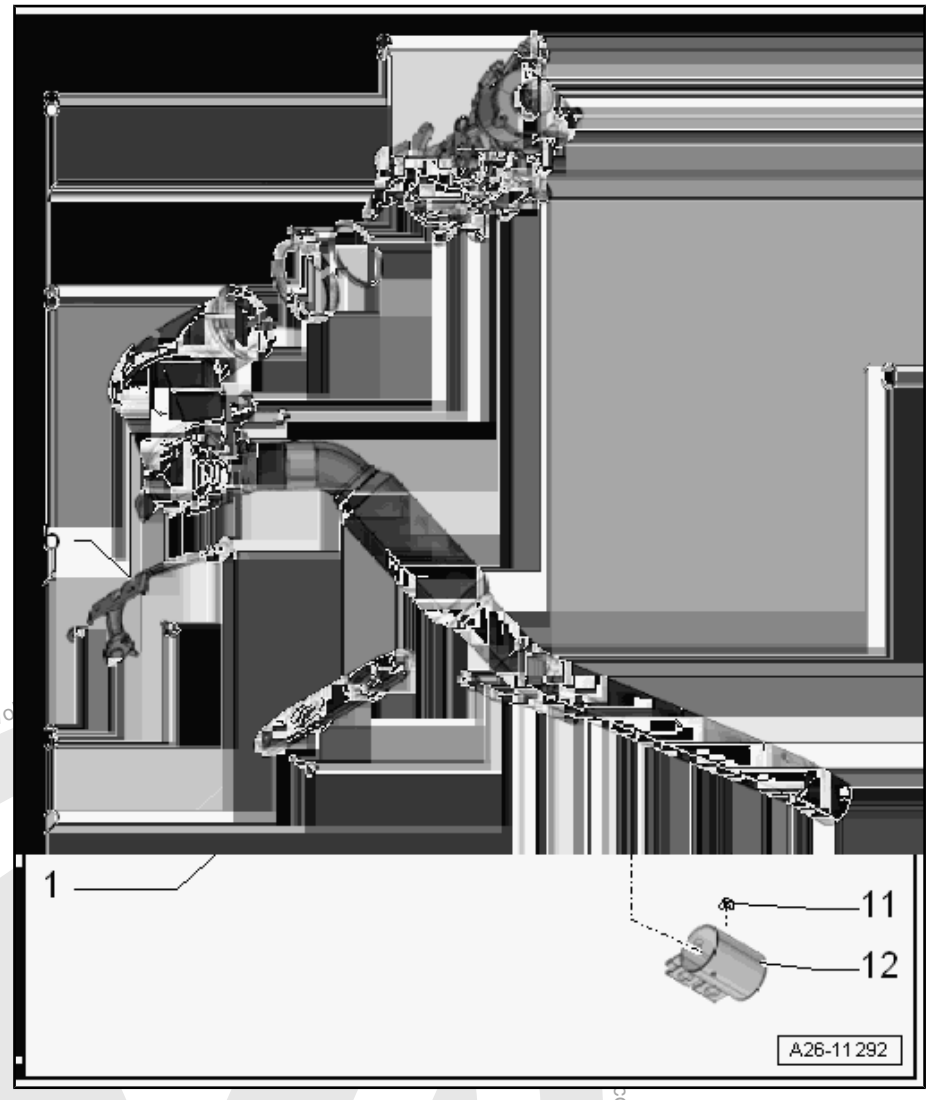

1 - Bolt

- ❑ 20 Nm

2 - Bracket

- ❑ Replace if damaged

3 - Bolt

Tightening specification and sequence. Refer to ⇒ Fig. ““Catalytic Converter - Tightening Specification and Sequence”“ , page 349 .

4 - Nut

Tightening specification and sequence. Refer to ⇒ Fig. ““Catalytic Converter - Tightening Specification and Sequence”“ , page 349 .

5 - Bracket

- ❑ For catalytic converter

6 - Catalytic Converter

- ❑ With front exhaust pipe
- ❑ Protect catalytic converter from shocks and impact stress
- ❑ Removing and installing. Refer to ⇒ “2.2 Catalytic Converter, Removing and Installing”, page 349 .
- ❑ Align the exhaust system free of tension. Refer to ⇒ “1.4 Exhaust System, Installing without Tension”, page 345 .

7 - Screw-Type Clamp

- ❑ Replace after removing
- ❑ Installed position. Refer to ⇒ Fig. ““Installed Location of the Catalytic Converter Screw Clamp”“ , page 349
- ❑ Tightening specification and sequence. Refer to ⇒ Fig. ““Catalytic Converter - Tightening Specification and Sequence”“ , page 349 .

8 - Seal

- ❑ Replace after removing

9 - Turbocharger

- ❑ Removing and installing. Refer to ⇒ “1 Turbocharger”, page 256 .

Protected by copyright. Copyright by Volkswagen AG.

10 - Nut

Tightening specification and sequence. Refer to
⇒ Fig. ""Catalytic Converter - Tightening Specification and Sequence"" , page 349 .

11 - Nut

- ❑ 30 Nm

12 - Front Clamping Sleeve

- ❑ Before tightening, align exhaust system free of tension. Refer to
⇒ "1.4 Exhaust System, Installing without Tension", page 345 .
- ❑ Installed position. Refer to ⇒ "1.6 Clamping Sleeve Installation Position", page 347
- ❑ Tighten threaded connections evenly.

– Install the clamping sleeve in the shown position. The threaded connection -arrows- must not project over the lower edge of the clamp.

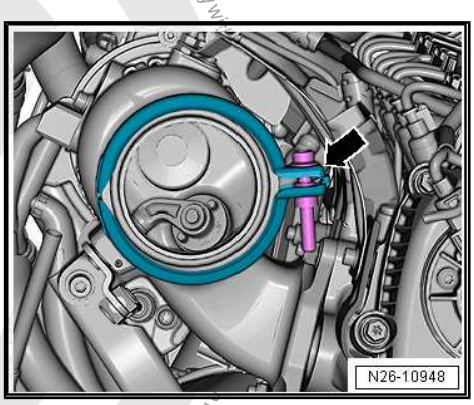

Installed Location of the Catalytic Converter Screw Clamp

– Install the screw-type clamp in the shown position. The threaded connection -arrow- must have equal distance to the other components.

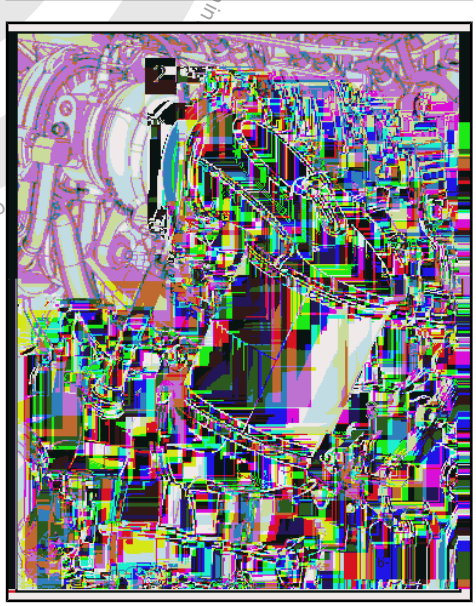

Catalytic Converter - Tightening Specification and Sequence

– Tighten the threaded connections in steps in the sequence shown:

Step	Threaded Connections/Nuts	Tightening Specification
1.	-1, 3 and 4-	Install all the way in by hand. • It must be possible to slide the catalytic converter and bracket back and forth.
2.	-2-	15 Nm Note the installation position. Refer to ⇒ Fig. ""Installed Location of the Catalytic Converter Screw Clamp"" , page 349 .
3.	-1, 3 and 4-	20 Nm

2.2 Catalytic Converter, Removing and Installing

Special tools and workshop equipment required

♦ Hot bolt paste. Refer to the Parts Catalog.

> **Caution**
>
> ***This procedure contains mandatory replaceable parts. Refer to component overview prior to starting procedure.***

Protected by copyright. Copying for private or commercial purposes, in part or in whole, is not permitted unless authorised by Volkswagen AG. Volkswagen AG does not guarantee or accept any liability w

Mandatory Replacement Parts

- Seal - Catalytic Converter

Removing

Note

During installation, all cable ties must be installed at the same location.

– Remove the connector -2- from the bracket and disconnect it. Free up the wires.

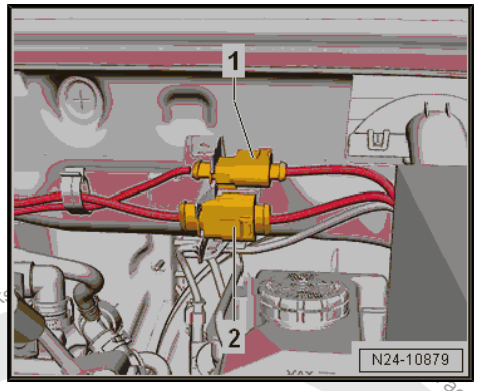

– Remove the bolt -2- and the screw-type clamp.

Note

- *The installed position is shown in the illustration with the engine removed.*
- *Ignore item -4-.*

– Remove the nuts -1 and 3-.

– Remove the front tunnel brace -1-.

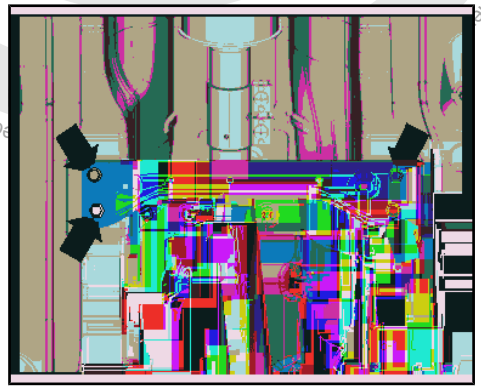

ed by copyright. Copying for private or commercial purposes, in part or in whole is not permitted unless authorised by Volks
accept any liability with respect to the correctness of information in this docume

– Remove the bolts -arrows-.

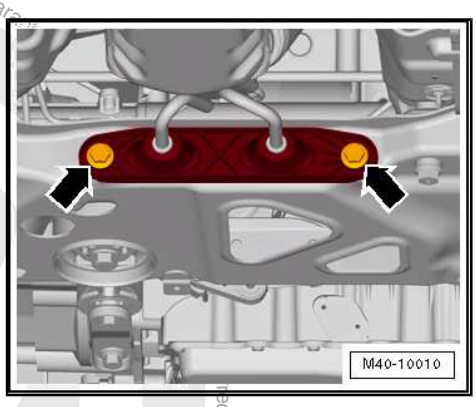

– Loosen the clamping sleeve -arrow- and push it toward the rear.

– Remove the catalytic converter with the front exhaust pipe.

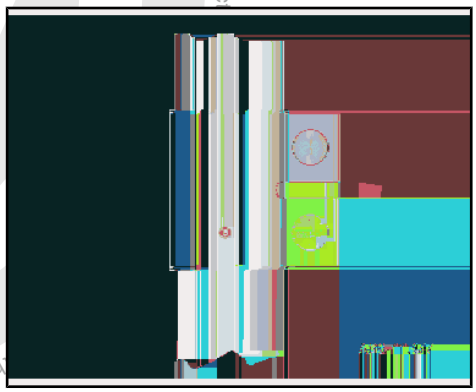

Installing

– Place the screwdriver -2- into the opening -arrow- on the turbocharger and pry out the seal -1-.

– Install new seal.

– Mount the catalytic converter on the turbocharger and install the screw-type clamp loose.

– Tighten the nuts and screw clamp. Refer to ⇒ Fig. ""Catalytic Converter - Tightening Specification and Sequence"" , page 349 . Pay attention to the installation position of the screw-type clamp. Refer to ⇒ Fig. ""Installed Location of the Catalytic Converter Screw Clamp"" , page 349 .

– Install the exhaust system free of tension. Refer to ⇒ "1.4 Exhaust System, Installing without Tension", page 345 .

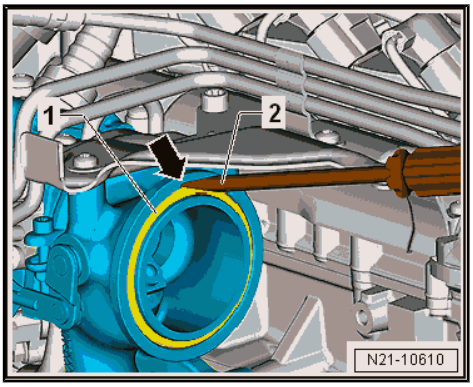

Assemble in reverse order of disassembly.

Tightening Specifications

♦ Refer to ⇒ "2.1 Overview - Emissions Control", page 348 .

♦ Refer to ⇒ Body Exterior; Rep. Gr. 66 ; Underbody Panel; Overview - Underbody Panels .

♦ Refer to ⇒ Body Exterior; Rep. Gr. 66 ; Noise Insulation; Overview - Noise Insulation .

Protected by copyright. Copying for private or commercial purposes, in part or in whole, is not permitted unless authorised by Volkswagen AG. Volkswagen AG does not guarantee

3 Secondary Air Injection System

⇒ "3.1 Overview - Secondary Air Injection System", page 352 .

⇒ "3.2 Secondary Air Injection Pump Motor V101 , Removing and Installing", page 353 .

⇒ "3.3 Secondary Air Injection Solenoid Valve N112 , Removing and Installing", page 353 .

3.1 Overview - Secondary Air Injection System

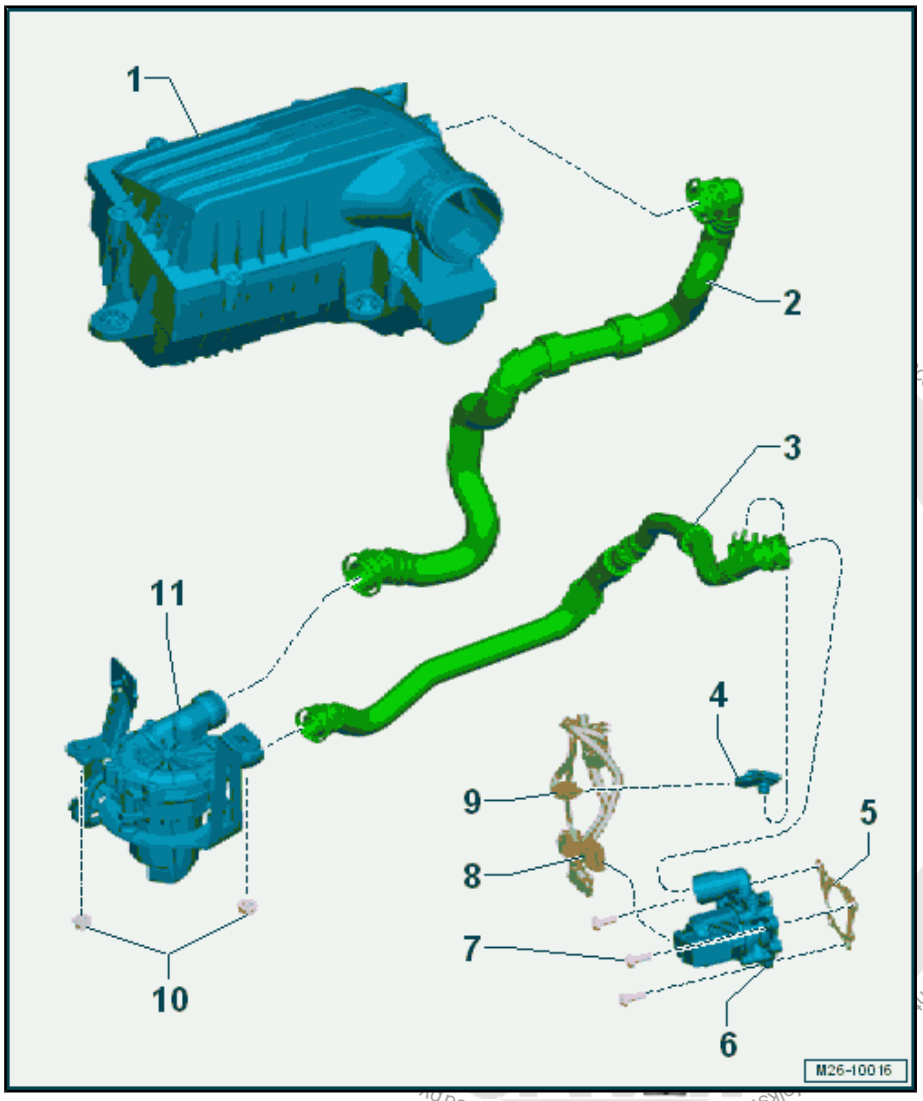

1 - Air Filter Housing

- ❑ Removing and installing. Refer to ⇒ "3.2 Air Filter Housing, Removing and Installing", page 294 .

2 - Connecting Line

- ❑ From the Secondary Air Injection Pump Motor - V101- on the air filter housing

3 - Connecting Line

- ❑ From the Secondary Air Injection Solenoid Valve - N112- on the Secondary Air Injection Pump Motor - V101-

4 - Secondary Air Injection Sensor 1 - G609-

5 - Seal

- ❑ Replace after removing the Secondary Air Injection Solenoid Valve - N112- .

6 - Secondary Air Injection Solenoid Valve - N112-

- ❑ Secondary Air Injection Solenoid Valve - N112- , Removing and installing. Refer to ⇒ "3.3 Secondary Air Injection Solenoid Valve N112 , Removing and Installing", page 353 .

7 - Bolt

- ❑ 9 Nm

8 - Electric Connection

- ❑ For the Secondary Air Injection Solenoid Valve - N112-

9 - Electric Connection

- ❑ For the Secondary Air Injection Sensor 1 - G609-

10 - Nut

- ❑ 8 Nm

Protected by ... Volkswagen AG. ... cept any liability with respect to the correctness of information in this document

11 - Secondary Air Injection Pump Motor - V101-

❑ Secondary Air Injection Pump Motor - V101- , Removing and installing. Refer to ⇒ “3.2 Secondary Air Injection Pump Motor V101 , Removing and Installing”, page 353 .

3.2 Secondary Air Injection Pump Motor - V101- , Removing and Installing

Removing

– Remove the noise insulation. Refer to ⇒ Body Exterior; Rep. Gr. 66 ; Noise Insulation; Overview - Noise Insulation .

– Open the release -arrows- and remove the lines -1- from the Secondary Air Injection Pump Motor - V101- -2-.

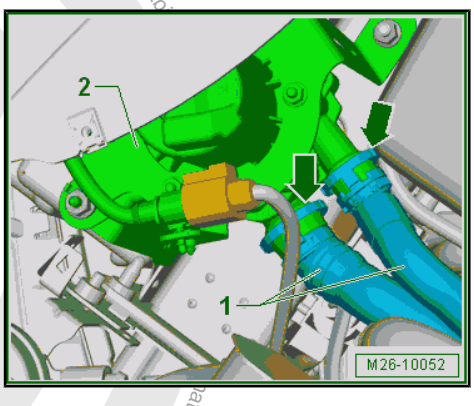

– Disconnect the connector -2- from the Secondary Air Injection Pump Motor - V101- .

– Remove the nuts -arrows- and the Secondary Air Injection Pump Motor - V101- -1- with the bracket.

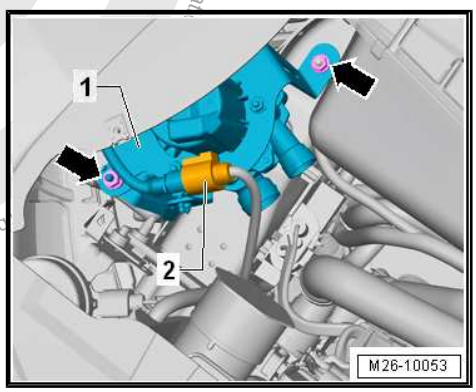

Installing

Install in reverse order of removal. Note the following:

Tightening Specifications

♦ Refer to ⇒ “3.1 Overview - Secondary Air Injection System”, page 352

3.3 Secondary Air Injection Solenoid Valve - N112- , Removing and Installing

Caution

This procedure contains mandatory replaceable parts. Refer to component overview prior to starting procedure.

Mandatory Replacement Parts

♦ Seal - Secondary Air Injection Solenoid

- The flange must not be separated from the Secondary Air Injection (AIR) solenoid valve.
- Both the AIR solenoid valve and the flange are replaced completely.

Removing

– Remove the air filter housing. Refer to ⇒ “3.2 Air Filter Housing, Removing and Installing”, page 294 .

Protected by copyright. Copying for private or commercial purposes, in part or in whole, is not permitted unless authorised by Volkswagen AG. Volkswagen AG does not guarantee or accept any liability with respect to the correctness of information

– Remove the battery tray. Refer to ⇒ Electrical Equipment; Rep. Gr. 27 ; Battery; Battery Tray, Removing and Installing .

– Free up the wiring harness -1 and 2- from the air guide pipe.

– Loosen the screw-type clamp -3-.

– Remove the bolts -arrows- and remove the air guide pipe.

– Remove the connector -3- from the Secondary Air Injection Sensor 1 - G609- -1- and unclip the sensor.

– Release both retaining tabs -arrow- from the Secondary Air Injection Sensor 1 - G609- and Secondary Air Injection Sensor 1 - G609- -1- from the connecting line -2-.

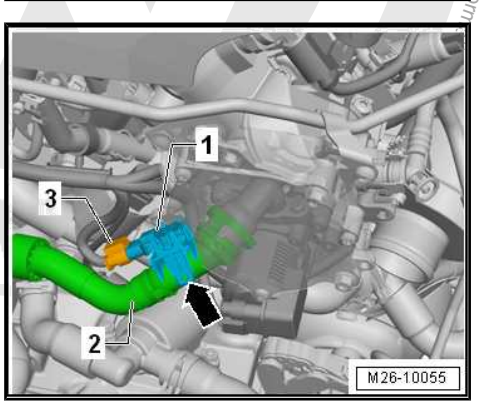

– Remove the connector -3- from the Secondary Air Injection Solenoid Valve - N112- -2-.

– Squeeze the locking ring on both sides and remove the connecting pipe -1-.

– Remove the bolts -arrows- from the Secondary Air Injection Solenoid Valve - N112- -1-.

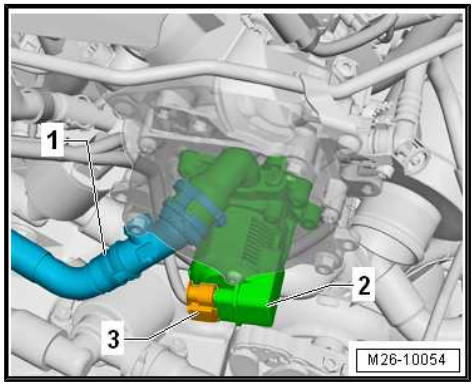

– Remove the bolts -arrows- and the Secondary Air Injection Solenoid Valve - N112- -1-.

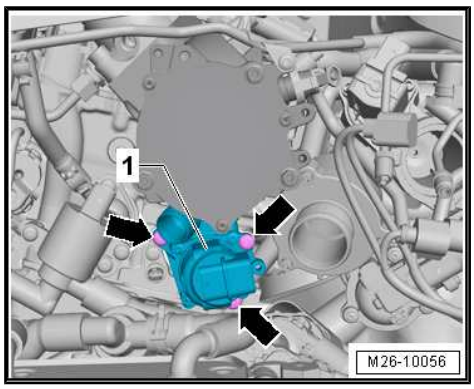

Installing

Install in reverse order of removal. Note the following:

- Replace the seal. Refer to Parts Catalog.

Tightening Specifications

♦ Refer to
⇒ “3.1 Overview - Secondary Air Injection System”, page 352 .

4 Special Tools

Special tools and workshop equipment required

- Chain Pipe Cutter - VAS6254-

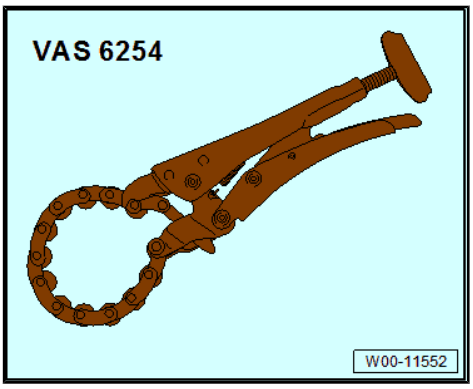

- Pneumatic Body Saw - VAS6780-

Protected by copyright. Copying for private or commercial purposes, in part or in whole, is not permitted unless authorised by Volkswagen AG. Volkswagen AG does not guarantee or accept any liability with respect to the correctness of information in this document. Copyright by Volkswagen AG.

28 – Ignition/Glow Plug System

1 Ignition System

⇒ “1.1 Overview - Ignition System”, page 356 .

⇒ “1.3 Ignition Coils with Power Output Stages, Removing and Installing”, page 357 .

⇒ “1.4 Knock Sensor 1 G61 , Removing and Installing”, page 359 .

⇒ “1.5 Camshaft Position Sensor, Removing and Installing”, page 360 .

⇒ “1.6 Engine Speed Sensor G28 , Removing and Installing”, page 361 .

1.1 Overview - Ignition System

1 - Bolt

- ❑ 8 Nm + 90°
- ❑ Replace after removing
- ❑ The tightening specification affect how the knock sensor functions

2 - Knock Sensor 1 - G61-

- ❑ Removing and installing. Refer to ⇒ “1.4 Knock Sensor 1 G61 , Removing and Installing”, page 359 .

3 - Spark Plug

- ❑ 30 Nm
- ❑ Remove and install using Spark Plug Removal Tool - 3122 B-

4 - Ignition Coil with Power Output Stage

- ❑ 10 Nm
- ❑ Ignition Coil 1 with Power Output Stage - N70-
- ❑ Ignition Coil 2 with Power Output Stage - N127-
- ❑ Ignition Coil 3 with Power Output Stage - N291-
- ❑ Ignition Coil 4 with Power Output Stage - N292-
- ❑ Ignition coils with power output stage and spark plug connectors can be obtained individually for repairs
- ❑ Removing and installing. Refer to ⇒ “1.3 Ignition Coils with Power Output Stages, Removing and Installing”, page 357 .

5 - Bolt

- ❑ 9 Nm

6 - Camshaft Position Sensor 3 - G300-

- ❑ Removing and installing. Refer to
  ⇒ “1.5.2 Camshaft Position Sensor 3 G300 , Removing and Installing”, page 360 .

7 - O-Ring

- ❑ Replace if damaged

8 - O-Ring

- ❑ Replace if damaged

9 - Camshaft Position Sensor - G40-

- ❑ Removing and installing. Refer to
  ⇒ “1.5.1 Camshaft Position Sensor G40 , Removing and Installing”, page 360 .

10 - Bolt

- ❑ 9 Nm

11 - O-Ring

- ❑ Replace if damaged

12 - Engine Speed Sensor - G28-

- ❑ Check the O-ring for damage
- ❑ Removing and installing. Refer to
  ⇒ “1.6 Engine Speed Sensor G28 , Removing and Installing”, page 361 .

13 - Bolt

- ❑ 9 Nm

1.2 Test Data and Spark Plugs

Ignition sequence	1-3-4-2	
Spark plugs		
VW part number. Refer to [1].	06K 905 601 B	06K 905 611 C
Electrode gap	0.7 to 0.8 mm	0.7 to 0.8 mm
Tightening Specification	-item 3- ⇒ Item 3 (page 356)	
Change intervals	Change intervals. Refer to the ⇒ Maintenance ; Booklet 36.1 ; Service Work; Service Tables .	

1) Refer to the Parts Catalog for the current spark plugs.

1.3 Ignition Coils with Power Output Stages, Removing and Installing

Special tools and workshop equipment required

- Puller - T10530-

Note

- *The ignition coils are easier to remove when the engine is warm. The grease that is used for installation helps the ignition coils or spark plug connectors to free up more easily when the engine is warm.*
- *Ignition coils with power output stage and spark plug connectors can be obtained individually for repairs. Refer to Parts Catalog.*

Protected by copyright. Copying for private or commercial purposes, in part or in whole, is not permitted unless authorised by Volkswagen AG. Volkswagen AG does not guarantee or accept any liability with respect to the correctness of information in this document. Copyright by Volkswagen AG.

Removing:

– Remove the engine cover. Refer to
⇒ “3.1 Engine Cover, Removing and Installing”, page 38 .

– If equipped remove the ground cable -arrows-.

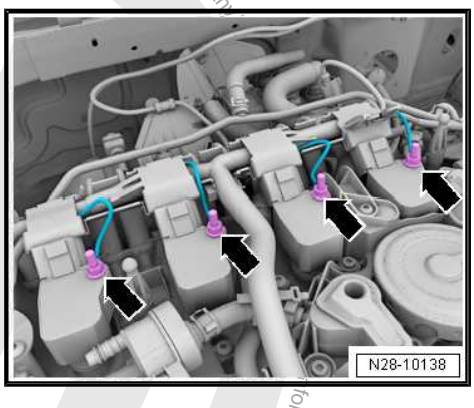

– Release the connector and disconnect all the connectors at the same time from the ignition coils.

– Remove the bolts for the ignition coil that is being removed.

– Insert the Puller - T10530- in the ignition coil opening -1-.

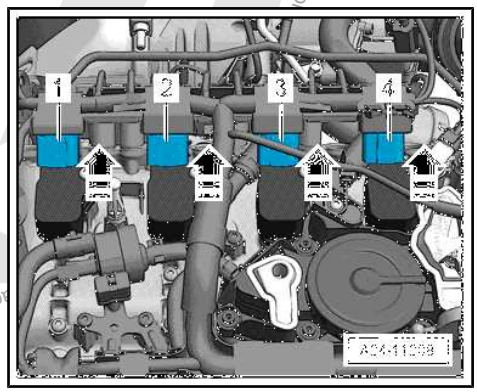

– Turn the knurled nut -2- clockwise until the puller is clamped.

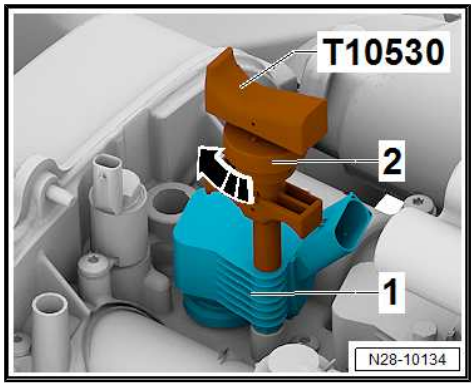

Protected by copyright. Copying for private or commercial purposes, in part or in whole, is not permitted unless authorised by Volkswagen AG. Volkswagen AG does not guarantee or accept any liability with respect to the correctness of information in this document.

– Carefully remove the ignition coil vertically upward using the Puller - T10530- .

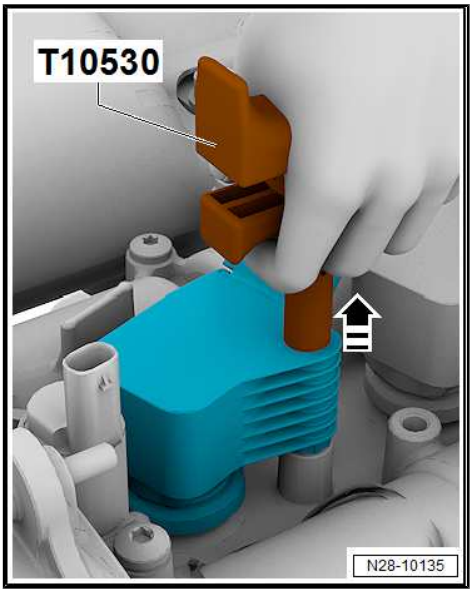

Note

- *Ignition coils with power output stage and spark plug connectors can be obtained individually for repairs. Refer to Parts Catalog.*
- *The spark plug connector is removed from the ignition coil by hand.*

Installing

– Push the ignition coils evenly onto the spark plugs using your hands (do not use any impact tools).

Tightening Specifications

- Refer to ⇒ "1.1 Overview - Ignition System", page 356

1.4 Knock Sensor 1 - G61- , Removing and Installing

Removing

Caution

This procedure contains mandatory replaceable parts. Refer to component overview prior to starting procedure.

Mandatory Replacement Parts

- Bolt - Knock Sensor

– Disconnect the connector -2- from Knock Sensor 1 - G61- .

– Remove the Engine Temperature Control Actuator - N493- . Refer to ⇒ "2.9 Engine Temperature Control Actuator N493 , Removing and Installing", page 237 .

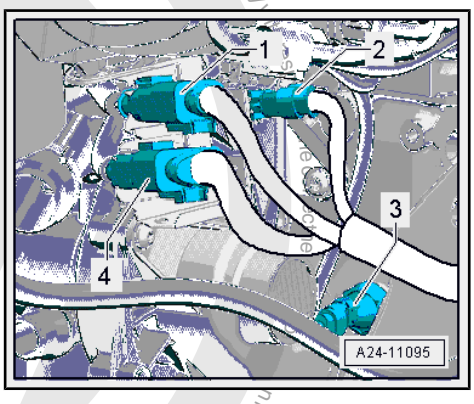

Note

The Knock Sensor 1 - G61- is under the intake manifold behind the Engine Temperature Control Actuator - N493- .

– Remove the Knock Sensor 1 - G61- -arrow-.

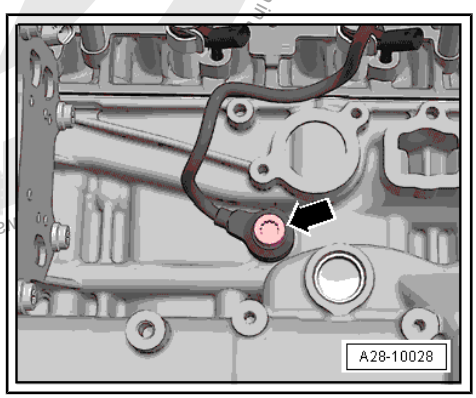

Protected by copyright. Copying for private or commercial purposes, in part or in whole, is not permitted unless authorised by Volkswagen AG. Volkswagen AG does not guarantee or accept any liability

Installing

Install in reverse order of removal. Note the following:

– Note the installed position of the Knock Sensor 1 - G61- .

– Install the Engine Temperature Control Actuator - N493- . Refer to
⇒ “2.9 Engine Temperature Control Actuator N493 , Removing and Installing”, page 237 .

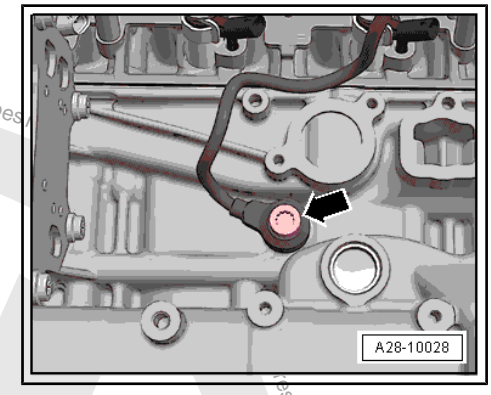

Tightening Specifications

♦ Refer to ⇒ “1.1 Overview - Ignition System”, page 356 .

1.5 Camshaft Position Sensor, Removing and Installing

⇒ “1.5.1 Camshaft Position Sensor G40 , Removing and Installing”, page 360

⇒ “1.5.2 Camshaft Position Sensor 3 G300 , Removing and Installing”, page 360

1.5.1 Camshaft Position Sensor - G40- , Removing and Installing

Removing

– Remove the engine cover. Refer to
⇒ “3.1 Engine Cover, Removing and Installing”, page 38 .

– Remove the intake manifold. Refer to
⇒ “4.3 Intake Manifold, Removing and Installing”, page 304 .

– Disconnect the connector -3-.

– Remove the bolt -1- and camshaft position sensor -2-.

Installing

Install in reverse order of removal. Note the following:

– Replace the O-ring.

Tightening Specifications

♦ Refer to ⇒ “1.1 Overview - Ignition System”, page 356 .

1.5.2 Camshaft Position Sensor 3 - G300- , Removing and Installing

Removing

– Remove the engine cover. Refer to
⇒ “3.1 Engine Cover, Removing and Installing”, page 38 .

– Disconnect the connector -3-.

Protected by copyright. Copyright by Volkswagen AG. Volkswagen AG does not authorise, nor accept responsibility for any unauthorised publication, in whole or in part, of its copyright material. Volkswagen AG does not guarantee or accept any liability with respect to the correctness of information in this document.

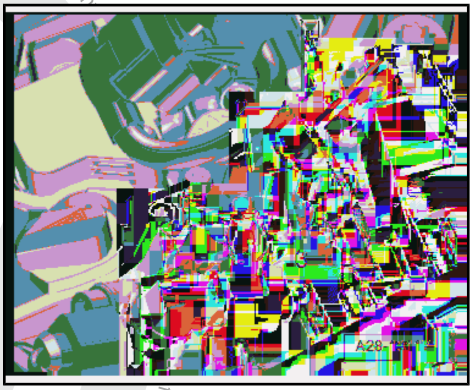

– Remove the bolt -1- and camshaft position sensor -2-.

Installing

Install in reverse order of removal. Note the following:

– Replace the O-ring.

Tightening Specifications

♦ Refer to ⇒ “1.1 Overview - Ignition System”, page 356 .

1.6 Engine Speed Sensor - G28- , Removing and Installing

Removing

– Remove the noise insulation. Refer to ⇒ Body Exterior; Rep. Gr. 66 ; Noise Insulation; Overview - Noise Insulation .

– Disconnect the coolant hose -3- from the charge air pipe and push aside.

– Disconnect the connector -1- from the Engine Speed Sensor - G28- .

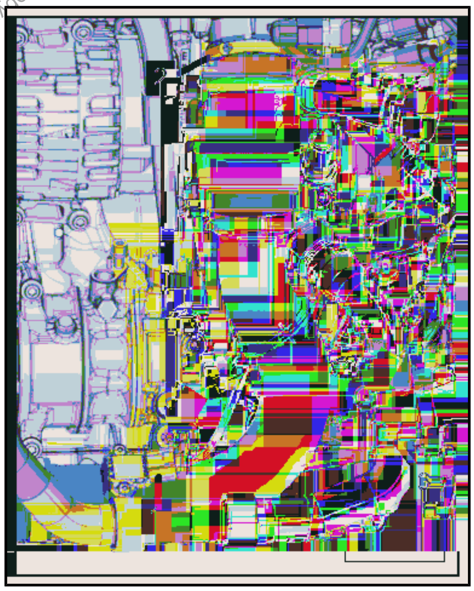

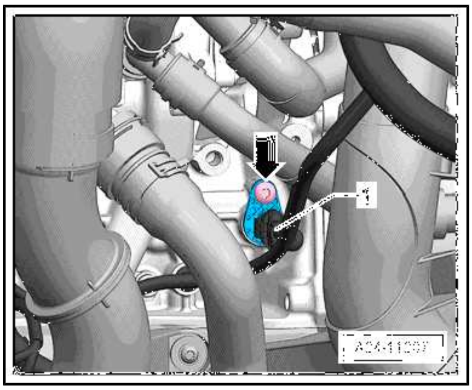

– Remove the bolt -arrow-.

Installing

Install in reverse order of removal.

– Install the noise insulation. Refer to ⇒ Body Exterior; Rep. Gr. 66 ; Noise Insulation; Overview - Noise Insulation .

Tightening Specifications

♦ Refer to ⇒ “1.1 Overview - Ignition System”, page 356 .

2 Special Tools

Special tools and workshop equipment required

- Puller - T10530-

Protected by copyright. Copying for private or commercial purposes, in part or in whole, is not permitted unless authorised by Volkswagen AG. Volkswagen AG does not guarantee or accept any liability with respect to the correctness of information in this document. Copyright by Volkswagen AG.

3 Revision History

DRUCK NUMBER: K0059240821

Factory Edition	Edit Edition	Job Type	Feedback	Notes	Quality Checked By
04.2015	04/19/2016	Local Feedback	1158461	Swapped items N580&N581 and N596&N597 in 24 -Overview - Component Location, Fuel Injection System	Eric P.
04.2015	04/05/2016	Local Feedback	1161867	Changed torque value for G61 bolt in Overview - Ignition System, from 20 NM to 8 + 90°	Eric P.
04.2015	03/31/2016	Local Feedback	1161616	Changed 200 to 2,000 RPM's in Engine Oil Pressure, Checking	Eric P.
04.2015	01/14/2016	Local Feedback	1146286	Added BX5 to metadata	Eric P.
04.2015	10/19/2015	Feedback	1117792	Added step for removing crankshaft ventilation hose, due to damaging the connection at the turbo charger for certain engines.	Eric P.
04.2015	08/18/2015	Major Edit	N/A		Eric P.
04.2015	07/30/2015	Correction	N/A	Added (Bolts) before the im-bild tags. Reference Feedback # 1113582	Eric P.
04.2015	07/29/2015	Local Feedback	1113582	Changed tables to list (legm tags) for Overview - Timing Chain Cover	Eric P.
04.2015	06/30/2015	Local Feedback	1101208	Added sections for the 2 types of oil pans - metal and plastic. Updated Overview - Oil Pan/Oil Pump.	Eric P.
04.2015	05/08/2015	Factory Update	N/A		Eric P.
02.2015	04/07/2015	Local Feedback	1084977	added engine code CXCB to metadata	Eric P.
02.2015	02/13/2015	Link Checking	N/A	updated ext-rl tags	Eric P.
02.2015	02/04/2015	Local feedback	1076494	Translations corrections	Eric P.

Protected by copyright. Copying for private or commercial purposes, in part or in whole, is not permitted unless authorised by Volkswagen AG. Volkswagen AG does not guarantee or accept any liability with respect to the correctness of information in this document. Copyright by Volkswagen AG.

Factory Edition	Edit Edition	Job Type	Feedback	Notes	Quality Checked By
02.2015	01/06/2015	Factory Update	N/A	Wagon added	Tom P.
04.2014	07/02/2014	Local Feedback	1026505,1026900,1026481		Eric P.
04.2014	06/12/2014	Factory New	N/A		Jim H.
01.2014	04/29/2014	Factory New	N/A	Launch for AU1 Golf. Per the Factory, this book ONLY covers CNTA and CHHB (Mexico). The CHHA is for the European market and was left in by mistake, per Francisco (email).	Gary R.

Protected by copyright. Copying for private or commercial purposes, in part or in whole is not permitted unless authorised by Volkswagen AG. Volkswagen AG does not guarantee or accept any liability with respect to the correctness of information in this document. Copyright by Volkswagen AG.

Cautions & Warnings

Please read these WARNINGS and CAUTIONS before proceeding with maintenance and repair work. You must answer that you have read and you understand these WARNINGS and CAUTIONS before you will be allowed to view this information.

- If you lack the skills, tools and equipment, or a suitable workshop for any procedure described in this manual, we suggest you leave such repairs to an authorized Volkswagen retailer or other qualified shop. We especially urge you to consult an authorized Volkswagen retailer before beginning repairs on any vehicle that may still be covered wholly or in part by any of the extensive warranties issued by Volkswagen.

- Disconnect the battery negative terminal (ground strap) whenever you work on the fuel system or the electrical system. Do not smoke or work near heaters or other fire hazards. Keep an approved fire extinguisher handy.

- Volkswagen is constantly improving its vehicles and sometimes these changes, both in parts and specifications, are made applicable to earlier models. Therefore, part numbers listed in this manual are for reference only. Always check with your authorized Volkswagen retailer parts department for the latest information.

- Any time the battery has been disconnected on an automatic transmission vehicle, it will be necessary to reestablish Transmission Control Module (TCM) basic settings using the VAG 1551 Scan Tool (ST).

- Never work under a lifted vehicle unless it is solidly supported on stands designed for the purpose. Do not support a vehicle on cinder blocks, hollow tiles or other props that may crumble under continuous load. Never work under a vehicle that is supported solely by a jack. Never work under the vehicle while the engine is running.

- For vehicles equipped with an anti-theft radio, be sure of the correct radio activation code before disconnecting the battery or removing the radio. If the wrong code is entered when the power is restored, the radio may lock up and become inoperable, even if the correct code is used in a later attempt.

- If you are going to work under a vehicle on the ground, make sure that the ground is level. Block the wheels to keep the vehicle from rolling. Disconnect the battery negative terminal (ground strap) to prevent others from starting the vehicle while you are under it.

- Do not attempt to work on your vehicle if you do not feel well. You increase the danger of injury to yourself and others if you are tired, upset or have taken medicine or any other substances that may impair you or keep you from being fully alert.

- Never run the engine unless the work area is well ventilated. Carbon monoxide (CO) kills.

- Always observe good workshop practices. Wear goggles when you operate machine tools or work with acid. Wear goggles, gloves and other protective clothing whenever the job requires working with harmful substances.

- Tie long hair behind your head. Do not wear a necktie, a scarf, loose clothing, or a necklace when you work near machine tools or running engines. If your hair, clothing, or jewelry were to get caught in the machinery, severe injury could result.

- Do not re-use any fasteners that are worn or deformed in normal use. Some fasteners are designed to be used only once and are unreliable and may fail if used a second time. This includes, but is not limited to, nuts, bolts, washers, circlips and cotter pins. Always follow the recommendations in this manual - replace these fasteners with new parts where indicated, and any other time it is deemed necessary by inspection.

next

© 2002 Volkswagen of America, Inc.
All rights reserved. Information contained in this document is based on the latest information available at the time of printing and is subject to the copyright and other intellectual property rights of Volkswagen of America, Inc., its affiliated companies and its licensors. All rights are reserved to make changes at any time without notice. No part of this document may be reproduced, stored in a retrieval system, or transmitted in any form or by any means, electronic, mechanical, photocopying, recording, or otherwise, nor may these materials be modified or reposted to other sites, without the prior expressed written permission of the publisher.
Version 1.0

Cautions & Warnings

- Illuminate the work area adequately but safely. Use a portable safety light for working inside or under the vehicle. Make sure the bulb is enclosed by a wire cage. The hot filament of an accidentally broken bulb can ignite spilled fuel or oil.

- Friction materials such as brake pads and clutch discs may contain asbestos fibers. Do not create dust by grinding, sanding, or by cleaning with compressed air. Avoid breathing asbestos fibers and asbestos dust. Breathing asbestos can cause serious diseases such as asbestosis or cancer, and may result in death.

- Finger rings should be removed so that they cannot cause electrical shorts, get caught in running machinery, or be crushed by heavy parts.

- Before starting a job, make certain that you have all the necessary tools and parts on hand. Read all the instructions thoroughly; do not attempt shortcuts. Use tools that are appropriate to the work and use only replacement parts meeting Volkswagen specifications. Makeshift tools, parts and procedures will not make good repairs.

- Catch draining fuel, oil or brake fluid in suitable containers. Do not use empty food or beverage containers that might mislead someone into drinking from them. Store flammable fluids away from fire hazards. Wipe up spills at once, but do not store the oily rags, which can ignite and burn spontaneously.

- Use pneumatic and electric tools only to loosen threaded parts and fasteners. Never use these tools to tighten fasteners, especially on light alloy parts. Always use a torque wrench to tighten fasteners to the tightening torque listed.

- Keep sparks, lighted matches, and open flame away from the top of the battery. If escaping hydrogen gas is ignited, it will ignite gas trapped in the cells and cause the battery to explode.

- Be mindful of the environment and ecology. Before you drain the crankcase, find out the proper way to dispose of the oil. Do not pour oil onto the ground, down a drain, or into a stream, pond, or lake. Consult local ordinances that govern the disposal of wastes.

- The air-conditioning (A/C) system is filled with a chemical refrigerant that is hazardous. The A/C system should be serviced only by trained automotive service technicians using approved refrigerant recovery/recycling equipment, trained in related safety precautions, and familiar with regulations governing the discharging and disposal of automotive chemical refrigerants.

- Before doing any electrical welding on vehicles equipped with anti-lock brakes (ABS), disconnect the battery negative terminal (ground strap) and the ABS control module connector.

- Do not expose any part of the A/C system to high temperatures such as open flame. Excessive heat will increase system pressure and may cause the system to burst.

- When boost-charging the battery, first remove the fuses for the Engine Control Module (ECM), the Transmission Control Module (TCM), the ABS control module, and the trip computer. In cases where one or more of these components is not separately fused, disconnect the control module connector(s).

- Some of the vehicles covered by this manual are equipped with a supplemental restraint system (SRS), that automatically deploys an airbag in the event of a frontal impact. The airbag is operated by an explosive device. Handled improperly or without adequate safeguards, it can be accidentally activated and cause serious personal injury. To guard against personal injury or airbag system failure, only trained Volkswagen Service technicians should test, disassemble or service the airbag system.

© 2002 Volkswagen of America, Inc.
All rights reserved. Information contained in this document is based on the latest information available at the time of printing and is subject to the copyright and other intellectual property rights of Volkswagen of America, Inc., its affiliated companies and its licensors. All rights are reserved to make changes at any time without notice. No part of this document may be reproduced, stored in a retrieval system, or transmitted in any form or by any means, electronic, mechanical, photocopying, recording, or otherwise, nor may these materials be modified or reposted to other sites, without the prior expressed written permission of the publisher.
Version 1.0

Cautions & Warnings

- Do not quick-charge the battery (for boost starting) for longer than one minute, and do not exceed 16.5 volts at the battery with the boosting cables attached. Wait at least one minute before boosting the battery a second time.
- Never use a test light to conduct electrical tests of the airbag system. The system must only be tested by trained Volkswagen Service technicians using the VAG 1551 Scan Tool (ST) or an approved equivalent. The airbag unit must never be electrically tested while it is not installed in the vehicle.
- Some aerosol tire inflators are highly flammable. Be extremely cautious when repairing a tire that may have been inflated using an aerosol tire inflator. Keep sparks, open flame or other sources of ignition away from the tire repair area. Inflate and deflate the tire at least four times before breaking the bead from the rim. Completely remove the tire from the rim before attempting any repair.
- When driving or riding in an airbag-equipped vehicle, never hold test equipment in your hands or lap while the vehicle is in motion. Objects between you and the airbag can increase the risk of injury in an accident.

I have read and I understand these Cautions and Warnings.

back OK

© 2002 Volkswagen of America, Inc.
All rights reserved. Information contained in this document is based on the latest information available at the time of printing and is subject to the copyright and other intellectual property rights of Volkswagen of America, Inc., its affiliated companies and its licensors. All rights are reserved to make changes at any time without notice. No part of this document may be reproduced, stored in a retrieval system, or transmitted in any form or by any means, electronic, mechanical, photocopying, recording, or otherwise, nor may these materials be modified or reposted to other sites, without the prior expressed written permission of the publisher.
Version 1.0