Table of Contents

E60 Communication Systems

Subject **Page**

Information/Communication Technology IKT 4
New Features Compared to E39 4
Multi-Audio System Controller 4
M-ASK Variants 5
M-ASK Functions 6
MOST-CAN Gateway 6
LVDS Driver 6
MOST Functions 6
System Master 6
Power Master 6
Network Master 6
Configuration Control 7
Fault Code Memory 7
Car Communication Computer 7
Controller 7
Navigation System 8
Top-HiFi Amplifier with LOGIC7 8
Telephone System 8
Voice Input System 8
Head-Up Display 8
Rear-Compartment Entertainment Center 8
Headset Interface 8
Radio 9
Antennas 9
Audio Master Function 10
Connection Master 11
Audio Output Stage 11

Audio Systems 11
HiFi 11
HiFi Components 11
Multi-Audio System Controller 12
Central Information Display 12
Controller 12
Mid-Range Speakers 12

cardiagn.com

Subject	Page

Audio Systems (cont.)

Central Woofers 12
HiFi Amplifier 12
Tweeters (High-Range Speakers) 13
HiFi System Speaker Layout 13
Hi-Fi System Schematic 14
Top HiFi 15
Top HiFi Components 15
Top-HiFi Amplifier 15
LOGIC 7 15
Mid-Range Speakers 15
Tweeters (High-Range Speakers) 16
Central Woofers 16
Top-HiFi Speaker Layout 16
Top HiFi Schematic 17
Audio CD Changer 18

Telephone Systems 19

Telematic Control Unit 19
Voltage Supply and Power Management 21
MOST Bus Interface 21
Bluetooth Antenna 21
Multifunctional Steering Wheel 21
Multi-Audio System Controller M-ASK 21
Controller 21
Design 22
Operating Principle 22
Eject Box 22
Motorola Mobile Phone Phoenix V60 22
Compensator 23
SOS Antenna 23
GPS Antenna 23

cardiagn.com

Model: E60

Production: Start of Production MY 2004

Communication Systems

Objectives:

After completion of this module you will be able to:

- Identify MOST system components and locations.
- Understand M-ASK functions.
- Recognize the HiFi and Top HiFi Systems.
- Know the Telematics System.

cardiagn.com

Information/Communication Technology IKT

New Features Compared to E39

- Multi-audio system controller M-ASK
- Car communication computer CCC (optional)
- Controller with simplified operation
- Navigation system integrated in CCC
- Top-HiFi amplifier with LOGIC7
- New fixed installation telephone system with GSM dual band and telematics
- Head-up display
- Voice input system integrated as software (CCC only)
- Rear compartment entertainment center with a second display and DVD changer
- Headset interface (not from series launch)

Multi-Audio System Controller

The multi-audio system controller M-ASK is the central control unit of the information and communications systems. The M-ASK combines up to four control units in one, used as the central control unit in the basic version.

M-ASK

CCC

cardiagn.com

The M-ASK combines the following control units in one housing:

- ASK
- Aerial amplifier/tuner
- MOST CAN gateway, interface to control display

In the E65, these modules are installed in separate control units.

The following advantages are achieved by combining several control units in one component:

- Fewer plug connections therefore fewer sources of fault
- Improved overall quality
- Less installation area required for control units
- Weight saving of control units
- Low closed-circuit current requirement

M-ASK Variants
Corresponding to the optional equipment configuration, the multi-audio system controller is installed in one of the following hardware variants:

- The M-ASK with CD drive features a single tuner and can be used worldwide. The M-ASK CD corresponds to the previous BMW radio Business CD and is fitted as standard.
- The M-ASK with CD-ROM drive can play back MP3 files and features a single tuner. It additionally receives the Weatherband in the US version. The M-ASK CD-ROM corresponds to the previous BMW radio Professional. (Not Available at SOP)

cardiagn.com

M-ASK Functions

The M-ASK undertakes the most important and central functions as well as control tasks in the communication network. It is responsible for the control and communication of the individual systems among each other. These tasks comprise the following main functions:

- MOST-CAN gateway
- LVDS driver
- MOST functions
- Radio function
- Audio master function
- Audio output stages

MOST-CAN Gateway

The M-ASK forms a gateway (interface) between the MOST bus and the K-CAN. The gateway connects the various bus systems of the vehicle network. The bus systems operate with different transmission rates and data formats. The information must be converted in the gateway in order to be able to use it in the various systems.

LVDS Driver

The LVDS driver (low voltage differential signal) receives the digital RGB signals from the graphic processor. The LVDS driver converts the RGB signals into LVDS signals and sends them via the LVDS cable to the central information display thus providing digital image signals on the display.

MOST Functions

System Master

The system master function that was still part of the control display on the E65/66 is now integrated in the M-ASK.

Power Master

In the E65/66 the power master function is in the control display and is now integrated in the M-ASK. The power master has following functions:

Wake-up, initialization, power-down

The power master wakes the bus and is responsible for ensuring correct initialization of the network. The network master is also responsible for initiating the power-down. Each power-down is requested at this master and initialized by it.

Network Master

The M-ASK is the network master for the MOST bus. The network master undertakes all control and monitoring tasks of the MOST bus. It performs following functions:

cardiagn.com

Configuration Control

The network master detects the exact system configuration each time that the network is started and compares it to a stored target configuration.

Fault Code Memory

The network master contains the central fault code memory of the MOST network. In addition to deviations from the specified configuration, all faults that occur during operation of the network are stored in this fault code memory.

Car Communication Computer

The car communication computer CCC is the central control unit of the High equipment. The CCC comprises the functions of the M-ASK, plus some additional functions. Voice control of the systems and the Professional navigation system with map presentation are additionally possible in connection with the CCC. The CCC also contains the driver for the rear passenger compartment display.
The CCC (to be introduced at a later date) will perform all the functions of the M-ASK as well as offering the High Navigation and additional programming possibilities.

Controller

The controller is the central control/operating element for all comfort and several car functions. The operating principle is identical to that of the E65. The directions in which the controller can be pushed has been reduced to four.
The controller comes in two versions, i.e. basic and High. The basic version is fitted with a mechanical locating mechanism for the checkback signal while in the High version the controller function is electrically generated for the check-back signal.

02723_02

Navigation System

The Professional navigation system features a map display in the central information display. The E60 no longer features a separate navigation computer. The navigation computer has been integrated in the CCC.

Top-HiFi Amplifier with LOGIC7

The E60 offers two different audio systems to choose from: HiFi and Top-HiFi. In the Top-HiFi version, the amplifier has a LOGIC7 function, i.e. there is optimum surround sound.

Telephone System

The E60 is equipped with the new fixed installation telephone system based on the Everest platform. It features various telematics functions.

Voice Input System

The CCC is combined with a voice input system, which can be used to execute most of the functions by way of voice commands in the communications network.

Head-Up Display

A further innovation in the E60 is the head-up display. Here additional information is beamed into the driver's field of vision. The driver can read this information without having to take his/her eyes off the road ahead, this representing an effective safety feature.

Rear-Compartment Entertainment Center

A rear-compartment entertainment centre will be provided at a later stage in conjunction with the CCC. This entertainment centre will allow the rear passengers to watch a DVD film on a second display in the rear compartment while the car is moving. TV reception with videotext will also be possible.

Headset Interface

The headset interface will allow passenger to listen simultaneously to different audio sources in the car (not at series launch).

cardiagn.com

Radio

The radio function is integrated in the M-ASK. The tuner is also located in the M-ASK. The tuner serves as the receiver. It converts the RF signal into an audio signal and transfers this signal via the audio output stages to the speakers.
The radio is controlled by means of the controller in the centre console and the menu in the central information display. The familiar control functions are available.
The M-ASK is offered with the following tuner variants:

- BMW radio with CD drive and single tuner
- BMW radio with CD-ROM drive and double tuner (Single Tuner at SOP)
- BMW radio with DVD drive and double tuner (Single Tuner at SOP)

The radios are world tuners, i.e. they can be programmed for all frequencies. The radios feature the familiar functions.

1. M-ASK
2. CID
3. Audio Speaker
4. Controller
5. AM/FM Antennas

Antennas

The tuner is connected to the antenna diversity of the rear window via an antenna connector (Fakra) and a coaxial cable. The following antennas are located in the rear window:

- FM antennas FM1-4
- AM antennas LW, MW, SW
- Remote control services (FBD) antenna

In addition to the antennas in the rear window, there is also a roof antenna for the telephone, GPS and satellite radio (US only).

The antenna structures are located on the inside and are the same on all rear windows. They are applied in a screen print process. The heating conductors of the rear window defogger are integrated in the antenna structures.
The carrier frame for the antenna diversity module is bonded at the top right directly to the rear window. The antenna diversity module is clipped onto the carrier frame and is connected by means of spring contacts to the antenna structure.

cardiagn.com

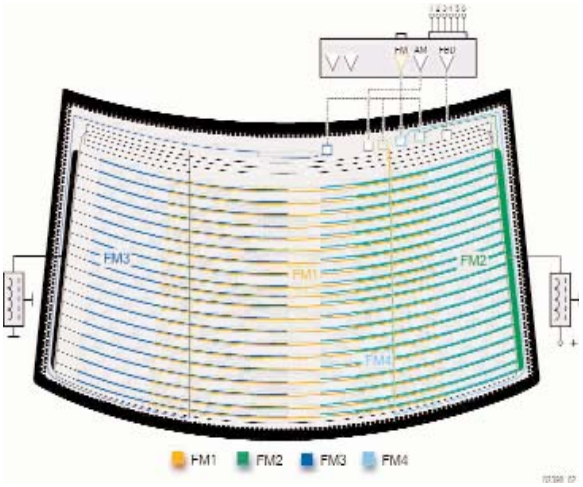

FM antenna arrangement in the E60

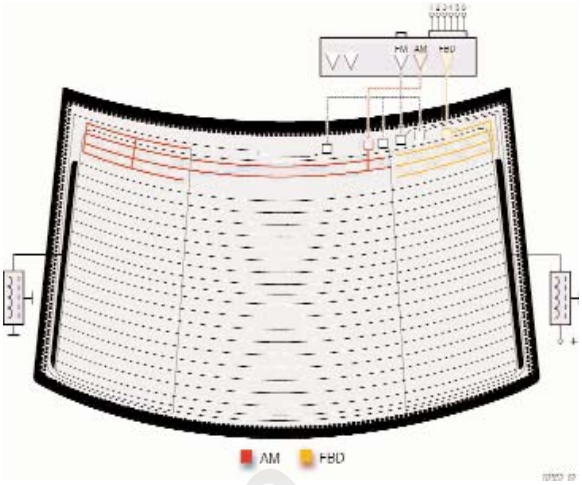

AM/FBD antenna arrangement in the E60

Note: Particular care must be taken when removing the antenna diversity module to ensure that the clips of the carrier frame do not break off, otherwise the rear window will have to be renewed.

Audio Master Function

One of the main functions of the M-ASK is the audio master. The task of the audio master is to collect, process and output all audio signals in the vehicle.
A further task of the audio master is to generate and make available the audio signals (with exception of the direction indicator noise) required by the various systems in the vehicle. The special acoustic signals are required for warnings or as information for the driver such as the PDC signal, jingles (gong).
In addition to the generated audio signals, the following audio signals are processed and output or made available on the MOST bus.

- Radio
- CD changer
- Telephone
- Navigation message
- AUX-In
- SDARS (US only)

The M-ASK controls all sound and acoustic setting requirements of the customer. The level of a signal is not changed abruptly but rather smoothly, e.g. by mixing, fading in and fading out or intermittent attenuation of the signal in the sink for the purpose of achieving high quality overall acoustics.
The M-ASK ensures clear cut acoustic changeover between the sources when a control unit is requested to output an information or warning signal. The acoustic signals or audio sources requested in the M-ASK are output in accordance with a defined priority structure.

cardiagn.com

Connection Master

The task of the connection master is to make available the channels for the audio sources and the acoustic signals.
The audio signals are distributed over speakers defined in a list.

- Example 1: entertainment sources at all speakers
- Example 2: hands-free telephone front left and right

Audio Output Stage

The multi-audio system controller M-ASK features 4 audio output stages each with a 25W output rating. The output stages are designed as bridgetype output stages. An electric fan feeds cooling air to the output stages and processors to ensure they do not cause the M-ASK to heat up. The electric fan is temperature-controlled and is regulated in three stages.

Audio Systems

Two audio systems are available:

- HiFi audio system
- Top-HiFi audio system

The further developed central bass system have realized a distinct improvement in the bass range compared to the E39. The Top-HiFi audio systems offers additional features such as 7-band graphic equalizer and surround sound.

HiFi

HiFi Components

The HiFi audio system is the standard system in the E60 and consists of the following components:

- Multi-audio system controller M-ASK
- Central information display CID
- Controller
- Front left and right mid-range speaker
- Left and right central woofer
- Rear left and right mid-range speaker
- HiFi Amplifier
- Front left and right tweeter (high-range speaker)
- Rear left and right tweeter (high-range speaker)

cardiagn.com

Multi-Audio System Controller
The M-ASK controls the stereo audio system. It contains the tuner for radio reception. Furthermore, the output stages for the audio outputs are integrated in the M-ASK. The M-ASK features four output stages each with an output power of 25 W.

Central Information Display
The CID serves the purpose of displaying and controlling the radio and audio functions.

Controller
The menus in the CID are selected and activated via the controller.

Mid-Range Speakers
The front and rear mid-range speakers are identical. In the HiFi audio systems, the speakers have a load rating of 25 W. The midrange speaker is equipped with a paper diaphragm. The effective frequency range is from 100 Hz to 15000 Hz.
The front mid-range speakers are located in the doors. The rear midrange speakers are mounted under the rear window shelf.

Central Woofers
High sound pressures can be achieved with the aid of the central woofers. A sufficiently large space for the resonance volume is made available by connecting the central bass housing to the sill area of the vehicle. The high sound pressures of the central woofers create a distortion-free bass in the low frequency range.
The two central woofers are located in the vehicle floor under the driver's and passenger's seats. The output of the central woofers is directed upward under the seats.
Modified central woofers are used in connection with the HiFi audio system. The central woofers have a diameter of 200 mm and a load bearing capacity of 40 W. The transmitted frequency is between 30 Hz and 500 Hz.

HiFi Amplifier
The HiFi amplifier is designed as an analogue two-channel amplifier with an output power of 2x40 W. The HiFi amplifier is connected via two channels to the M-ASK. The input signals are amplified via integrated band filters and bridge-type output stages to 2x40 W and output to the central woofers.
The control takes place via the M-ASK. Due to the distribution of the output stages in the M-ASK and in the HiFi amplifier, the output stages must be switched on/off synchronously. The time required to switch on the output stages must not exceed 25 ms to ensure no crackling or clicking noise is heard.
The HiFi amplifier does not feature diagnostic capabilities.
The HiFi amplifier is installed on the rear left in the luggage compartment.

cardiagn.com

Tweeters (High-Range Speakers)

The HiFi audio system features additional tweeters (high-range speakers) at the front and rear. In connection with the HiFi audio system, the speakers are designed with a load rating of 25 W. The tweeters are equipped with spherical caps made of silk. The effective frequency range is from 5000 Hz to 20000 Hz.

The tweeters are connected in parallel with the supply line of the front mid-range speakers. The frequency range is determined by means of capacitors in the supply line. The tweeters feature an enclosed selfcontained design, i.e. the speakers and resonance volume form one unit.

The front tweeters are located in the mirror triangles while the rear tweeters are mounted under the rear window shelf.

HiFi System Speaker Layout

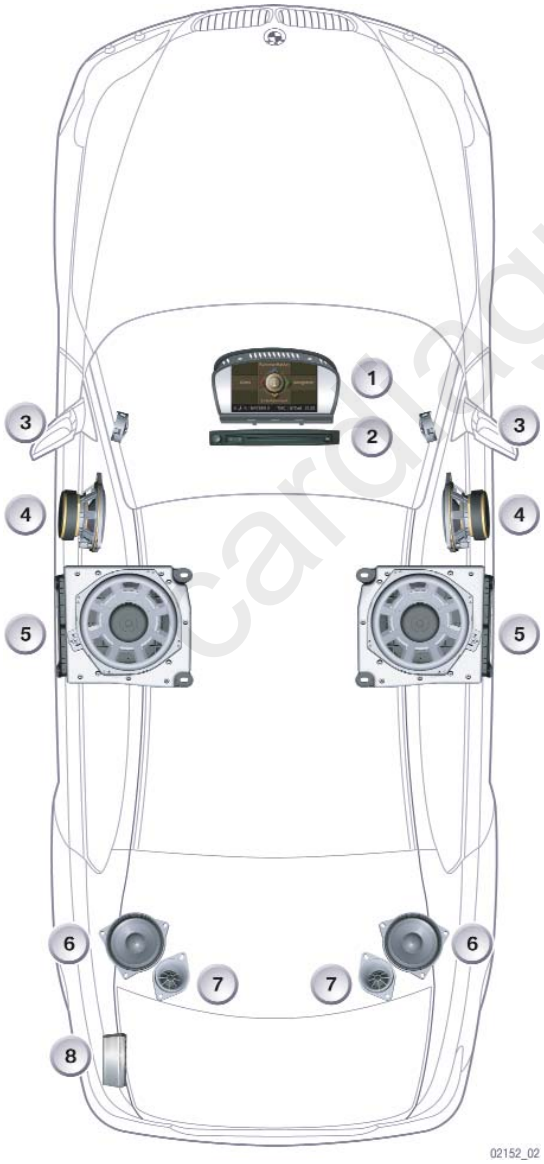

1. CID
2. M-ASK
3. Tweeter, Front
4. MidRange, Front
5. Central Woofer
6. Mid Range Rear
7. Tweeter, Rear
8. HiFi Amplifier

cardiagn.com

Hi-Fi System Schematic

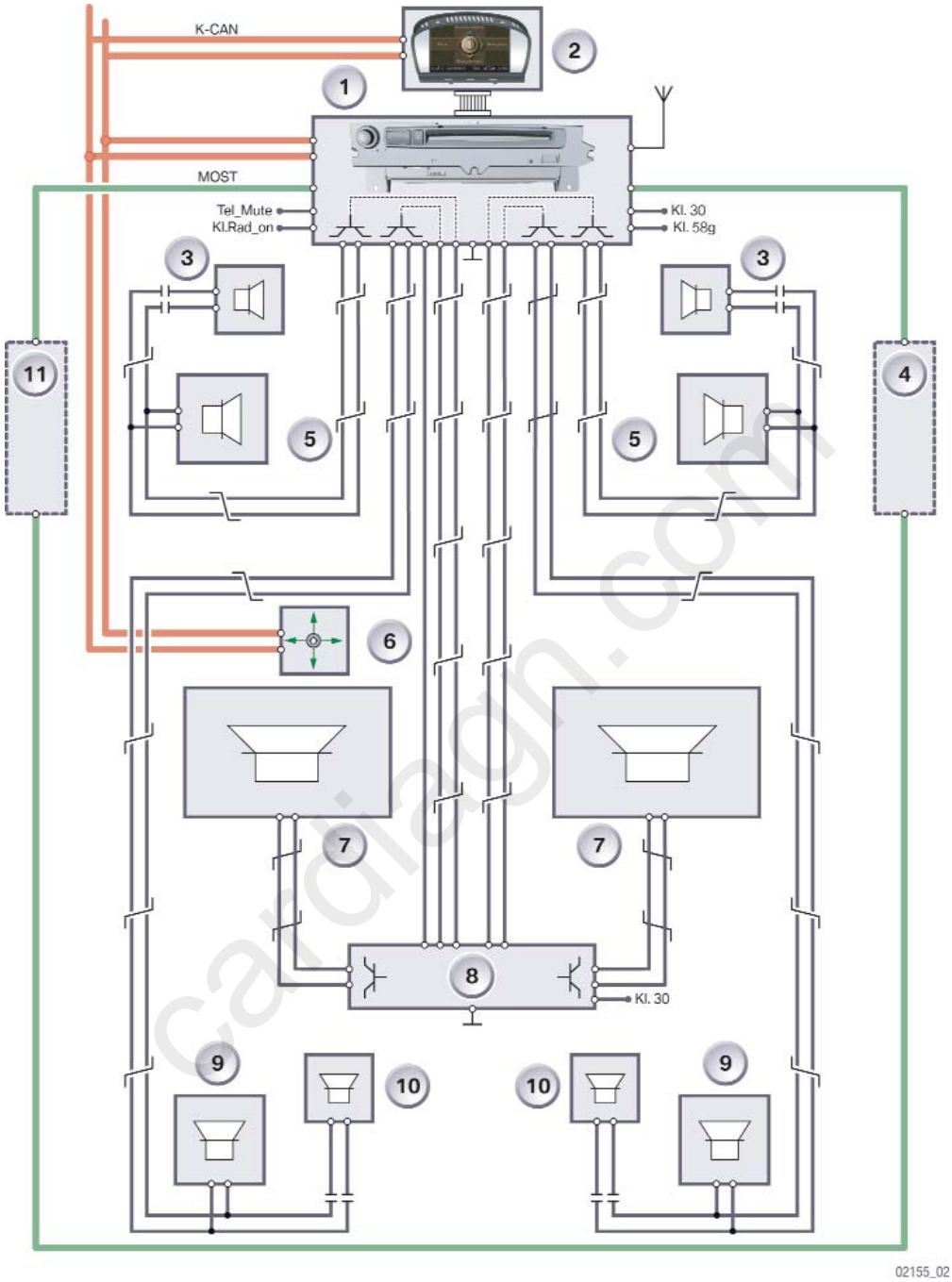

1. M-ASK
2. CID
3. Tweeter, Front
4. Other MOST Bus users
5. Mid Range, Front
6. Controller
7. Central Woofer
8. HiFi Amplifier
9. Mid Range, Front
10. Tweeter, Rear
11. Other MOST Bus users

cardiagn.com

Top HiFi

Top HiFi Components

The Top-HiFi audio system differs from the HiFi audio system by higher grade speakers and the addition of following components:

- Top-HiFi amplifier
- Front mid-range speaker mounted centrally in instrument panel
- Mid-range speakers in rear left and right doors

Higher grade speakers are used in the Top-HiFi audio system. The midrange speakers are equipped with aluminum diaphragms, the tweeters with aluminum spherical caps. The speakers were adapted corresponding to the higher output power of the Top-HiFi amplifier.

Top-HiFi Amplifier

The Top-HiFi amplifier is designed as an analogue 7-channel amplifier (LOGIC7). It features 7 bridge-type output stages with an output power rating of 7x40 W at 2 and a bandwidth of 200 Hz - 20 kHz. In addition, two bridge-type output stages rated 2x70 W at 4 and a bandwidth of 20 Hz - 200 Hz are available for the central woofers.
This amplifier is connected via the MOST bus to the M-ASK. All audio signals are transmitted from the M-ASK via the MOST bus. The Top-HiFi amplifier is equipped with the LOGIC7 function.

LOGIC 7

LOGIC7 is a registered trademark of Lexicon, Inc., a company of the Harman International Group. It was especially developed for applications in motor vehicles.
LOGIC7 is a sound system that creates a 7-channel surround sound from 2-channel audio sources (radio, CD, CC). The incoming stereo signals are decoded in the digital sound processor (DSP), distributed over 7 channels and remixed. The entire transmission width is used on each channel, thus creating perfect surround sound that gives the listener the impression of being in the middle of the space.

Mid-Range Speakers

The load rating of the mid-range speakers was increased to 40 W for the Top-HiFi audio system. The mid-range speakers are equipped with aluminum diaphragms. aluminum diaphragms are particularly lightweight and feature a higher rigidity. These properties result in improved inherent dynamics and a clearer sound over the entire frequency range.
The effective frequency range is from 100 Hz to 10000 Hz. The Top-HiFi audio system was extended by three mid-range speakers. A mid-range speaker was positioned in the center of the instrument panel in order to realize the surround sound function in the vehicle. Two further mid-range speakers were integrated in the rear doors.

cardiagn.com

Tweeters (High-Range Speakers)

The tweeters (high-range speakers) have also been adapted. The load rating was increased to 40 W. The tweeters are equipped with aluminum spherical caps. They feature sealed design. The effective frequency range is from 5000 Hz to 20000 Hz.

Central Woofers

Compared to the HiFi audio system, further modified central woofers are used in the Top-HiFi audio system. The central woofers have a diameter of 200 mm and a load bearing capacity of 70 W. The transmitted frequency is between 30 Hz and 500 Hz.

Top-HiFi Speaker Layout

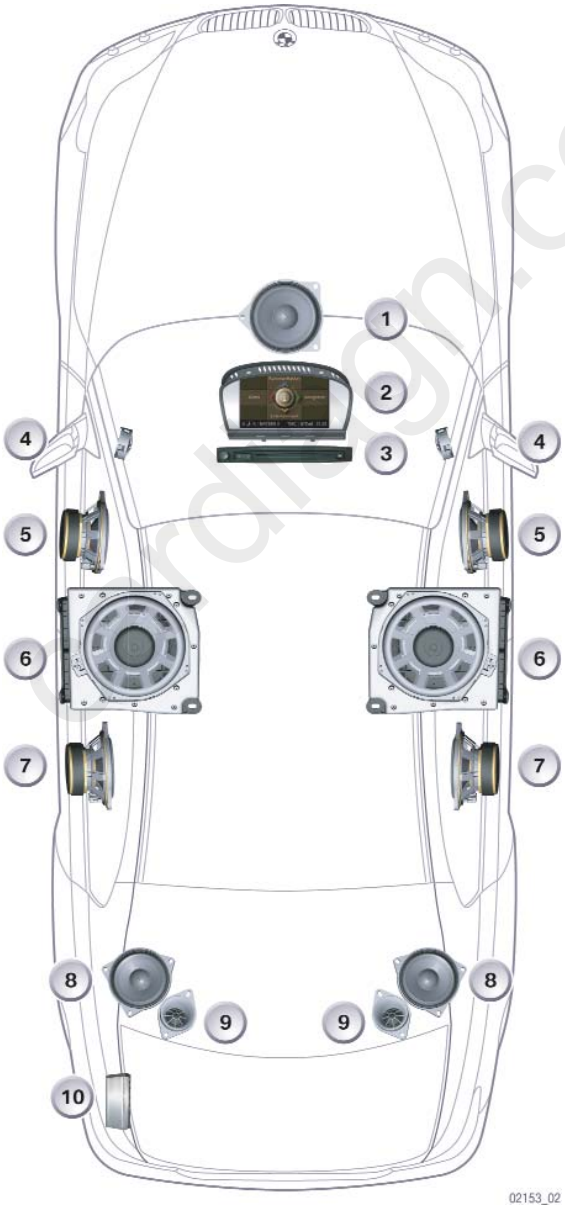

1. Front Center Speaker
2. CID
3. M-ASK
4. MidRange, Front
5. Tweeter, Front1
6. Central Woofer
7. Mid Range Center
8. Mid Range, Rear
9. Tweeter, Rear
10. Top HiFi Amplifier

cardiagn.com

Top HiFi Schematic

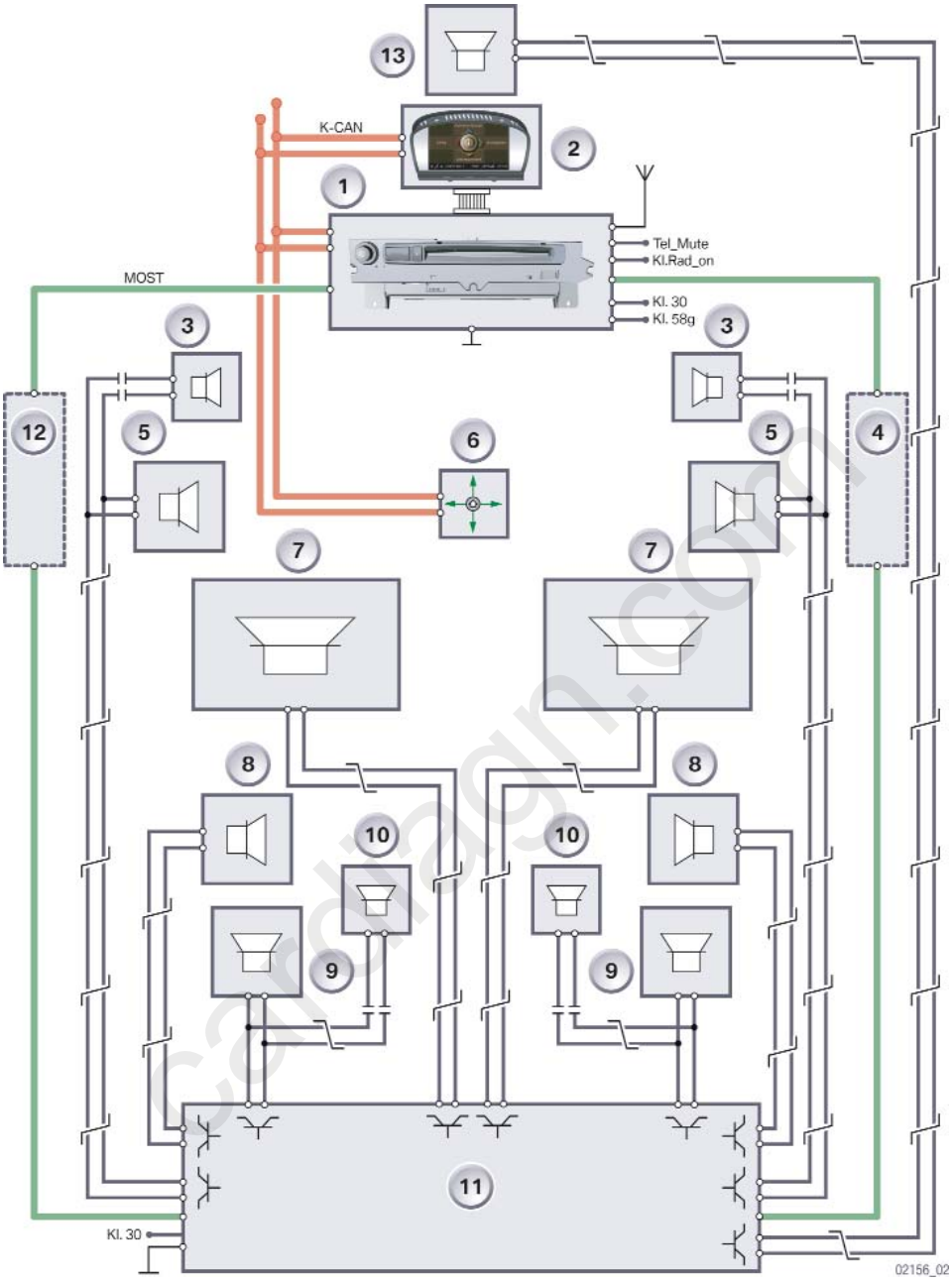

1. M-ASK
2. CID
3. Tweeter, Front
4. Other MOST Bus users
5. Mid Range, Front
6. Controller
7. Central Woofer
8. Mid Range, Center
9. Mid Range, Front
10. Tweeter, Rear
11. Top HiFi Amplifier
12. Other MOST Bus users
13. Mid Range, Front Center

carbiagn.com

Audio CD Changer

The audio CD changer in the E60 is a new development. The following details have changed:

- The housing dimensions are smaller and more lightweight
- The magazine is newly designed
- The CD changer has an optical bus link

The magazine is newly designed and now features a transparent cover making it possible to see what compartment is loaded with a CD. The new design now also differentiates distinctly from the DVD magazine.
As before, the CD changer is designed as a 6-compartment changer with magazine. The housing dimensions have been distinctly reduced so that less space is required, making it possible to fit he CD changer in the glove compartment.

The CD changer is located in the units carrier behind the glove compartment. The glove compartment must be opened in order to change the magazine.

A new feature is the optical link to the MOST bus. The CD changer sends the digital audio signals via the MOST bus to the multi-audio system controller.
In the Top-HiFi audio system, the digital audio signals are sent directly to the Top-HiFi amplifier. All controls and operating signals are also sent via the MOST bus.

carcdiagn.com

Telephone Systems

In the country-specific version US, the option comprises the complete telephone preparation including telematics. A part of the telephone preparation is installed ex-factory, the remainder is retrofitted in the USA. The complete preparation consists of the following components:

- Telematic control unit TCU (standard)
- Telephone antenna (standard)
- SOS antenna (standard)
- GPS antenna (standard)
- Bluetooth antenna (standard)
- Hands-free microphones (standard)
- Eject box (retrofitted in USA)
- Motorola mobile phone Phoenix V60 (retrofitted in USA)
- Compensator (retrofitted in USA)
- Emergency call included for one year, then optional customer pay.

Telematic Control Unit

The TCU is always installed in the country-specific version US even if no telephone was ordered. The telematic functions emergency call and breakdown call are standard features. The scope of functions differs from the EU version by following features:

- The TCU is always installed to facilitate the emergency call even if no telephone is fitted
- Dual band 800 MHz and 1900 MHz
- Combined transceiver module NAD (network access device) for the analogue AMPS standard (American Mobile Phone Standard) and the digital CDMA standard (Code Division Multiplex Algorithm)
- Eject box with charger for Motorola Phoenix V60
- Telematics Unit (E/B) Call
- GPS Receiver

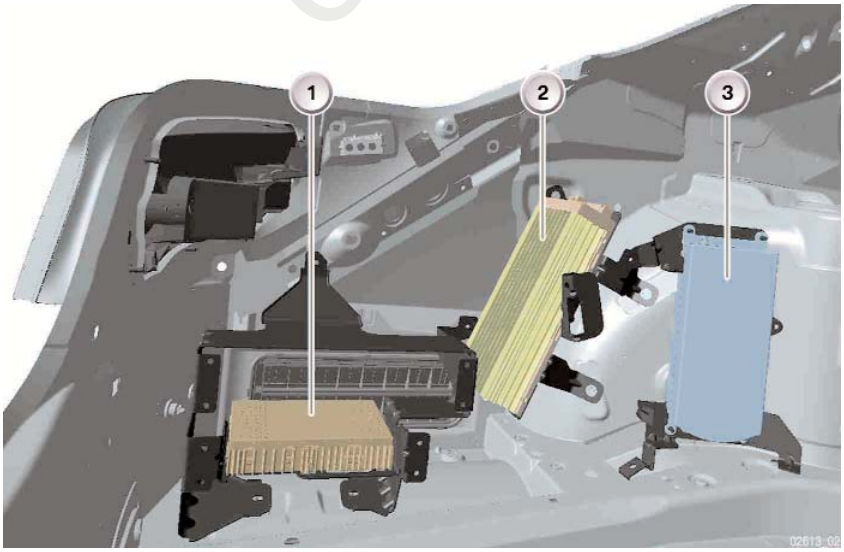

1. Satellite Radio Receiver
2. Top HiFi Amp
3. Telematic Control Unit

carmagn.com

Telephone Schematic

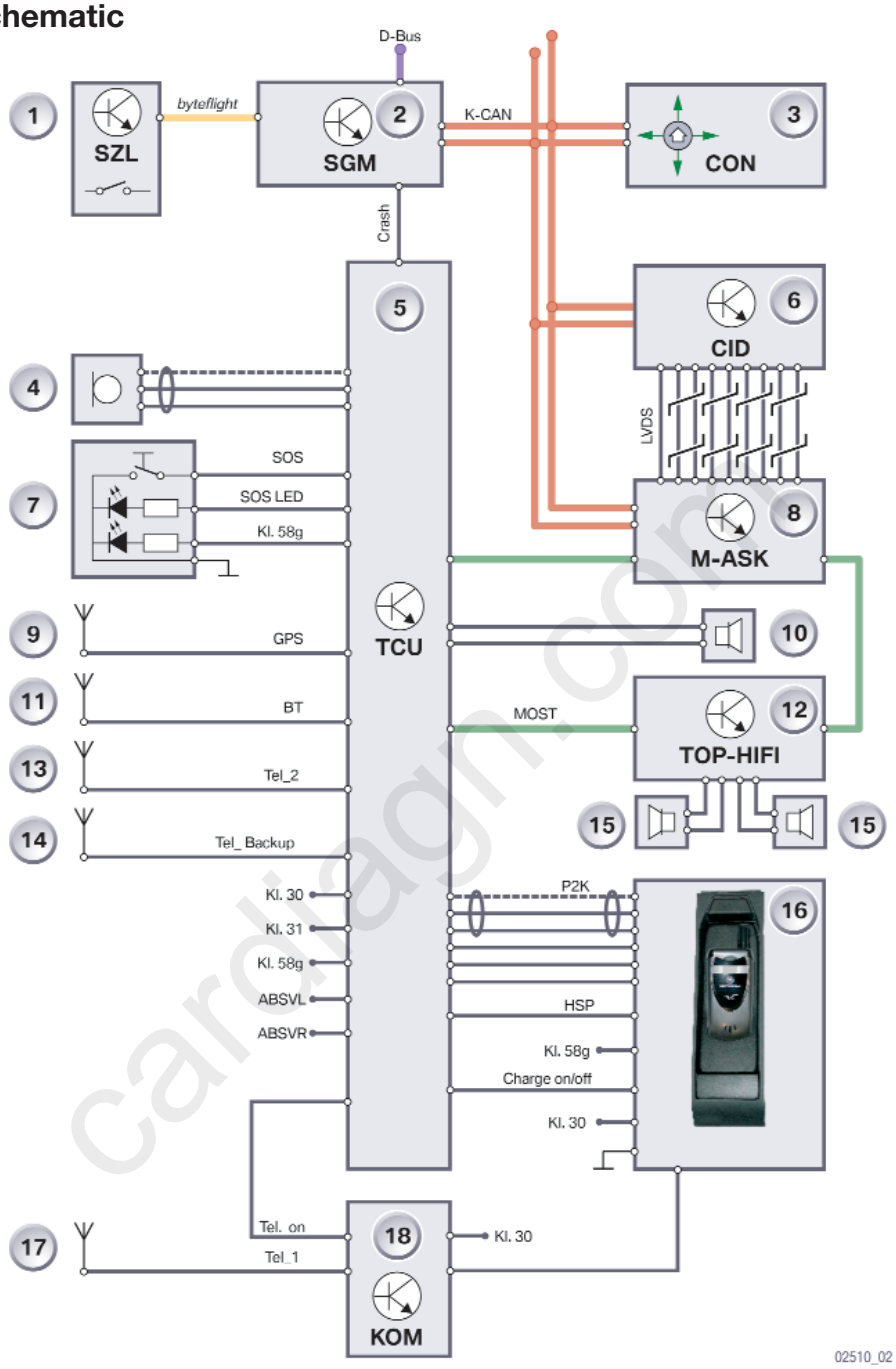

1. Transmit/Receive Button
2. SGM
3. Controller
4. Hands free microphone
5. TCU
6. CID
7. Emergency Call Button
8. M-ASK
9. GPS Antenna
10. SOS Speaker
11. Bluetooth Ant.
12. Top HiFi Amp
13. CDMA Ant.
14. SOS Ant.
15. Speaker
16. Eject Box
17. AMPS Ant.
18. Compensator

cardiagn.com

Voltage Supply and Power Management

The power management module in the TCU monitors and controls the voltage supply of the telephone system. The telephone system is switched off in the event of undervoltage/overvoltage in the system network.

MOST Bus Interface

The TCU is connected via the MOST bus interface to the MOST bus and therefore to the bus systems of the vehicle. Control data (e.g. telephone book entries) and audio signals for voice output (voice of call partner) are transmitted via the MOST interface. The TCU is woken up by the MOST bus.

Bluetooth Antenna

The Bluetooth antenna operates in the ISM band (industrial science medical band) on a frequency of 2.45 GHz. It is located under the rear window shelf. It is connected directly to the TCU.

Note: To ensure unrestricted reception, care should be taken to ensure that no objects are placed on the rear window shelf as they could considerably influence the reception capability of the Bluetooth antenna. ***(Not available at SOP)***

Multifunctional Steering Wheel

The multifunction steering wheel has a send/receive button for accepting and ending a call. The TCU switches to hands-free mode if the call is accepted by pressing the receive button.

Multi-Audio System Controller M-ASK

The multi-audio system controller is responsible for the control of the MOST bus and channel allocation. It also controls the audio output at the speakers.

Controller

The controller is used to operate the telephone functions. Various menus can be selected and the functions executed with the aid of the controller.

cardiagn.com

Design

The design of the TCU in the US version is identical to that of the EU version (Everest platform). The difference is in a different transceiver module (NAD) that is adapted to the specific requirements. The TCU features a modular design and is equipped corresponding to the country-specific version and requirements.

Operating Principle

In the US version, the telematic control unit features a combined transceiver module NAD (network access device). The NAD operates in accordance with the AMPS/CDMA standard with the frequencies 800/1900 MHz.

The TCU features an antenna selector switch for the AMPS/CDMA antenna. The TCU operates in the digital CDMA network. If a sufficient network supply cannot be ensured, the TCU switches over to the AMPS network. The widespread AMPS network is used especially in rural areas.
If the option Professional navigation system is not installed, the TCU will be fitted with an internal GPS receiver. The GPS receiver is connected to the GPS antenna that is integrated in the roof antenna. In the US version, the telephone/telematics functions are available in three stages:

- Basic
- Business
- Professional

Eject Box

The eject box is an additional component that must be retrofitted in the USA. The eject box serves the purpose of accepting the Motorola Phoenix V60 mobile phone and is located in a compartment in the centre console.

The charger for the mobile phone is integrated in the eject box. The antenna connection for the AMPS antenna is also located directly in the eject box. Data transfer from the mobile phone to the TCU takes place by means of a multi-core cable (P2K, point to connect).

Motorola Mobile Phone Phoenix V60

The Motorola Phoenix V60 mobile phone is the standard telephone in the US version. The mobile phone is also a component part of the retrofit.
All functions are available only when the mobile phone functions are provided. The telephone book is integrated in the mobile phone. SMSs can only be sent with the mobile phone.

cardiagn.com

Compensator

The compensator is connected in the antenna line between the roof antenna and the mobile phone. The task of the compensator is to compensate for losses on the antenna line and to ensure the full transmit power of the mobile phone is available at the roof antenna. The compensator is not an amplifier that boosts the transmit power output.

SOS Antenna

The SOS antenna is fitted as standard under the rear window shelf. It ensures an emergency call can be sent even after a crash and failure of the roof antenna.

GPS Antenna

The GPS antenna is integrated in the roof antenna. It receives the signals from the satellites of the global positioning system and sends these signals to the GPS receiver.

cardiagn.com

Workshop Exercise - Communications

1. *Why does the Basic Controller NOT include the Speech Recognition Button?*

   _____

2. *What happens to the radio sound when the MOST Bus fails in a vehicle equipped with Top HiFi?* _____
   HiFi? _____

3. *Does the SOS call function operate if the MOST Bus is down?* _____

4. *What is the location of the SOS antenna?* _____

5. *Why does the TCU include a GPS receiver in vehicles equipped with Navigation?*

   _____

   _____