OPEL ZAFIRA

Owner's Manual

Wir leben Autos.

Contents

Introduction 2
In brief 6
Keys, doors and windows 27
Seats, restraints 44
Storage 67
Instruments and controls 77
Lighting 109
Climate control 117
Driving and operating 125
Vehicle care 153
Service and maintenance 193
Technical data 197
Customer information 216
Index 218

Introduction

Fuel	Designation			
Engine oil	Grade			
	Viscosity			
Tyre pressure		Tyre size	Front	Rear
	Summer tyres			
	Winter tyres			
Weights				
	Gross vehicle weight rating			
	- Kerb weight, basic model			
	- Additional weight			
	- Heavy accessories			
	= Loading			

Vehicle specific data

Please enter your vehicle's data on the previous page to keep it easily accessible. This information is available under the sections "Service and Maintenance" and "Technical data" as well as on the identification plate.

Introduction

Your vehicle is a designed combination of advanced technology, safety, environmental friendliness and economy.

This Owner's Manual provides you with all the necessary information to enable you to drive your vehicle safely and efficiently.

Make sure your passengers are aware of the possible risk of accident and injury which may result from improper use of the vehicle.

You must always comply with the specific laws and regulations of the country that you are in. These laws may differ from the information in this Owner's Manual.

When this Owner's Manual refers to a workshop visit, we recommend your Opel Service Partner.

All Opel Service Partners provide first-class service at reasonable prices. Experienced mechanics trained by Opel work according to specific Opel instructions.

The customer literature pack should always be kept ready to hand in the vehicle glovebox.

Using this manual

- This manual describes all options and features available for this model. **Certain descriptions, including those for display and menu functions, may not apply to your vehicle due to model variant, country specifications, special equipment or accessories.**
- The "In brief" section will give you an initial overview.
- The table of contents at the beginning of this manual and within each section shows where the information is located.
- The index will enable you to search for specific information.
- Yellow arrows in the illustrations serve as points of reference or indicate some action to be performed.
- Black arrows in the illustrations indicate a reaction or a second action to be performed.
- This Owner's Manual depicts left-hand drive vehicles. Operation is similar for right-hand drive vehicles.
- The Owner's Manual uses the factory engine designations. The corresponding sales designations can be found in the section "Technical data".
- Directional data, e.g. left or right, or front or back, always relate to the direction of travel.
- The vehicle display screens may not support your specific language.
- Display messages and interior labelling are written in **bold** letters.

Danger, Warnings and Cautions

⚠ Danger

Text marked ⚠ **Danger** provides information on risk of fatal injury. Disregarding this information may endanger life.

⚠ Warning

Text marked ⚠ **Warning** provides information on risk of accident or injury. Disregarding this information may lead to injury.

Caution

Text marked **Caution** provides information on possible damage to the vehicle. Disregarding this information may lead to vehicle damage.

Symbols

Page references are indicated with ⇨.
⇨ means "see page".

We wish you many hours of pleasurable driving.

Adam Opel AG

In brief

Initial drive information

Vehicle unlocking

Radio remote control

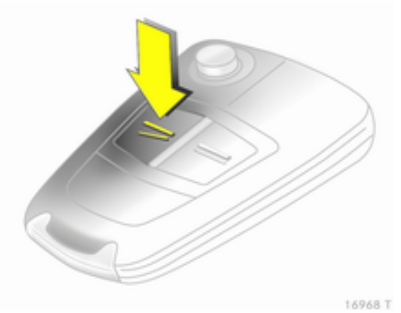

Press button ⊼ to unlock and open door. To open the tailgate, press the button under the moulding.

Radio remote control ⇨ 28, Central locking system ⇨ 32, Load compartment ⇨ 35.

Electronic key

When in possession of the electronic key, simply pulling the door handle will unlock the vehicle and open the door. To open the tailgate, press the button under the moulding.

Open&Start system ⇨ 29.

Seat adjustment

Seat positioning

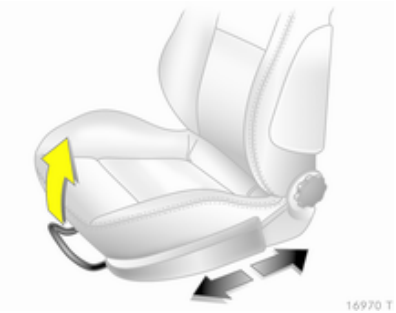

Pull handle, slide seat, release handle.

Seat adjustment ⇨ 46, Seat position ⇨ 46.

⚠ Danger

Do not sit nearer than 25 cm from the steering wheel, to permit safe airbag deployment.

Seat backrests

Turn handwheel. Do not lean on seat when adjusting.

Seat adjustment ⇨ 46, Seat position ⇨ 46, Folding front passenger seat backrest ⇨ 49.

Seat height

Lever pumping motion

up = higher
down = lower

Seat adjustment ⇨ 46, Seat position ⇨ 46.

Seat inclination

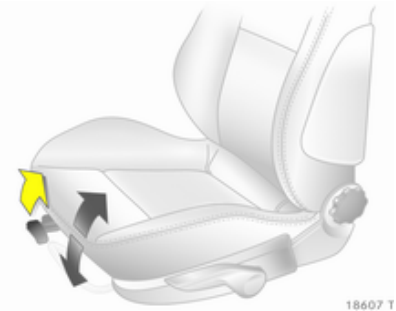

Pull lever, adjust inclination by shifting body weight. Release lever and audibly engage seat in position.

Seat adjustment ⇨ 46, Seat position ⇨ 46.

Head restraint adjustment

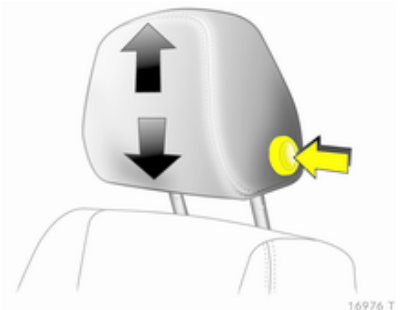

Press release button, adjust height, engage.

Head restraints ⇨ 44.

Seat belt

Pull out the seat belt and engage in belt buckle. The seat belt must not be twisted and must fit close against the body. The backrest must not be tilted back too far (maximum approx. 25 °).

To release belt, press red button on belt buckle.

Seat belts ⇨ 54, Airbag system ⇨ 58, Seat position ⇨ 46.

Mirror adjustment

Interior mirror adjustment

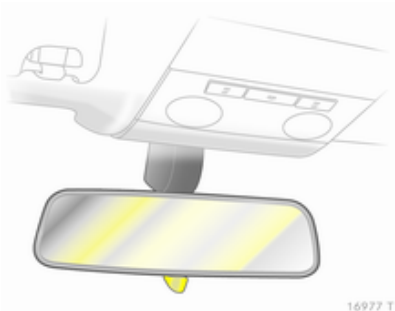

Swivel the lever on the underside to reduce dazzle.

Interior mirror ⇨ 40, Automatic anti-dazzle interior mirror ⇨ 40.

Exterior mirrors adjustment

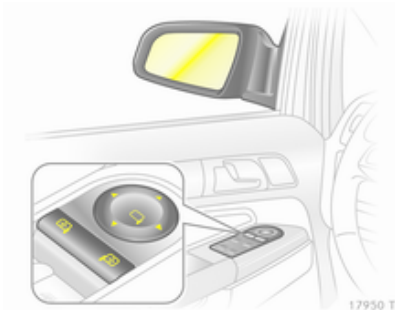

Select the relevant exterior mirror and adjust.

Electric adjustment ⇨ 38, Convex exterior mirrors ⇨ 38, Folding exterior mirrors ⇨ 39, Heated exterior mirrors ⇨ 39.

Steering wheel adjustment

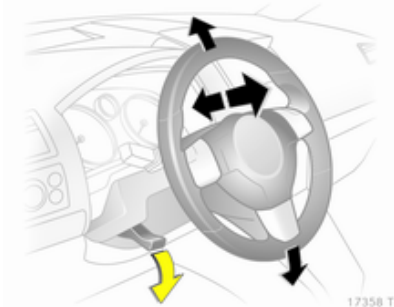

Unlock lever, adjust steering wheel, then engage lever and ensure it is fully locked. Do not adjust steering wheel unless vehicle is stationary and steering wheel lock has been released.

Airbag system ⇨ 58, Ignition positions ⇨ 126

Instrument panel overview

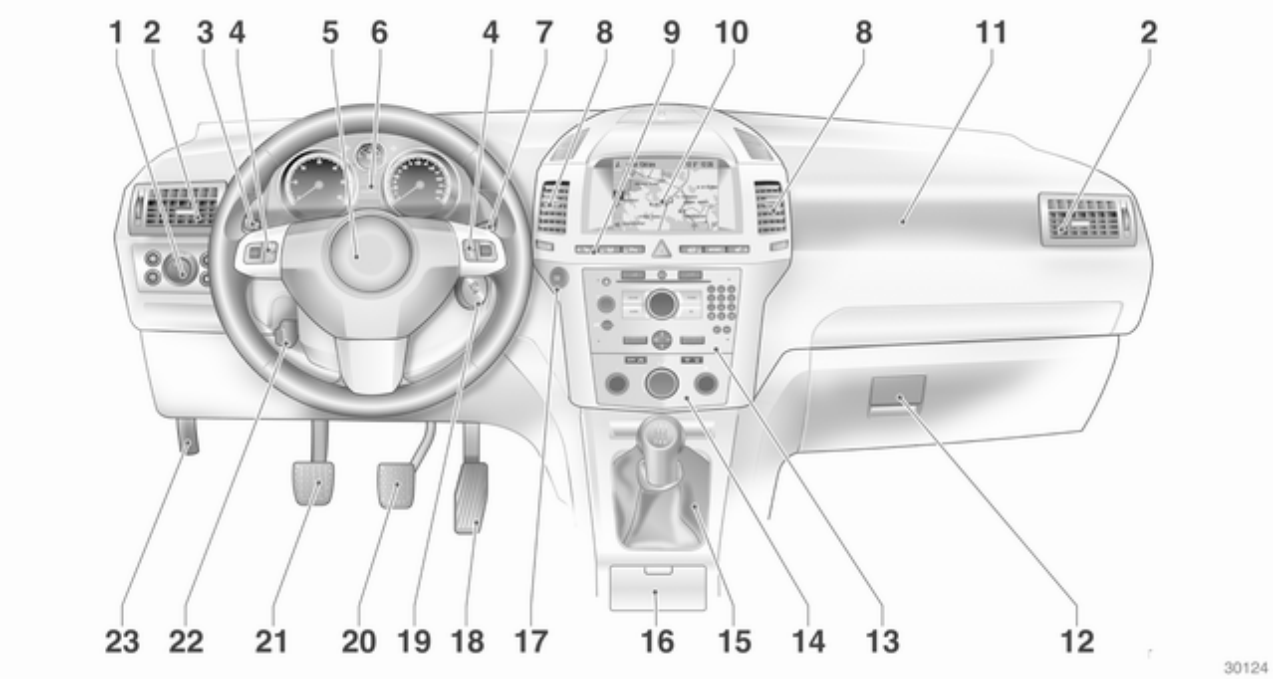

1 Light switch 109
Instrument illumination 114
Rear fog light 113
Front fog lights 112
Headlight range adjustment 110
2 Side air vents 123
3 Turn and lane-change signals, headlight flash, low beam and high beam ... 112
Exit lighting 115
Parking lights 113
Cruise control 94
4 Steering wheel controls 77
5 Horn 78
Driver airbag 58
6 Instruments 83
7 Windscreen wiper, windscreen washer system, headlight washer system 78
8 Centre air vents 123
9 Left heated seat 49
Deflation detection system .. 177
Tyre pressure monitoring system 176
Ultrasonic parking assist 90
Hazard warning flashers 112
Central locking system 32
Sport mode 90
Right heated seat 49
Fuel selector 85
10 Info-Display 94
Trip computer 104
Electronic climate control system 120
11 Front passenger airbag 58
12 Glovebox 67
13 Infotainment system 10
14 Climate control system 117
15 Selector lever, manual transmission 134
Manual transmission automated 135
Automatic transmission 129
16 Ashtray 82
17 **Start/Stop** button 29
18 Accelerator pedal 125
19 Ignition switch with steering wheel lock 126
Sensor panel for emergency operation of the Open&Start system 29
20 Brake pedal 139
21 Clutch pedal 125
22 Steering wheel adjustment . . . 77
23 Bonnet release lever 155

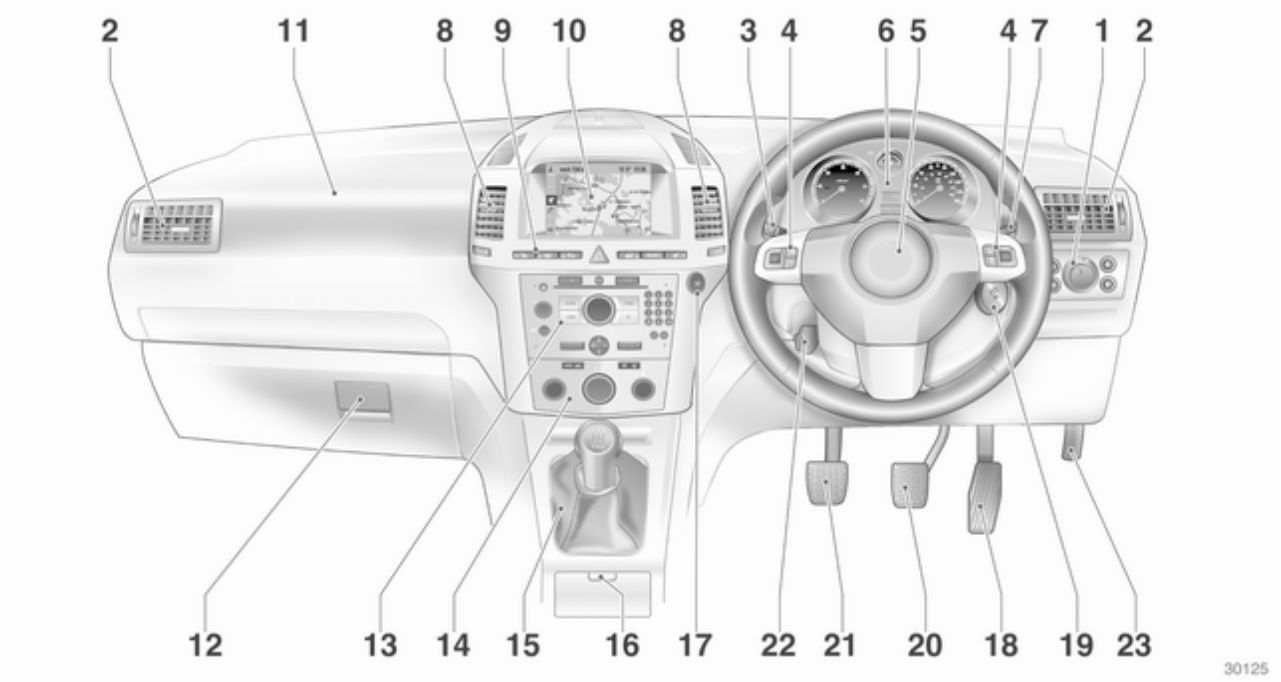
2
11
8
9
10
8
3
4
6
5
4
7
1
2
12
13
14
15
16
17
22
21
20
18
19
23
30125

Exterior lighting

Turn light switch

0	=	Off
	=	sidelights
	=	low beam
AUTO	=	Automatic light control

Press light switch

	=	Front fog lights
	=	Rear fog light

Lighting ⇨ 109, Headlight warning device ⇨ 101.

Headlight flash, high beam and low beam

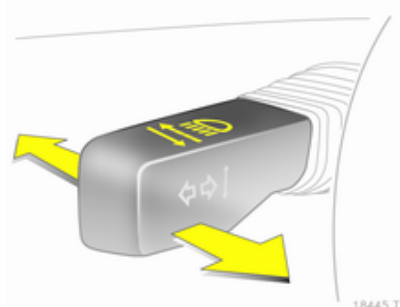

Headlight flash	=	Pull lever
High beam	=	Push lever
Low beam	=	Push or pull lever

High beam ⇨ 110, Headlight flash ⇨ 110.

Turn and lane-change signals

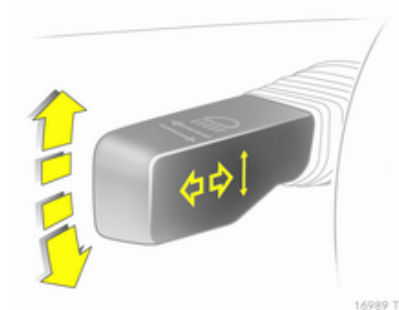

To the right	=	Lever up
To the left	=	Lever down

Turn and lane-change signals ⇨ 112.

Hazard warning flashers

Operated with the ⚠ button.

Hazard warning flashers ⇨ 112.

Horn

Press 📯.

Washer and wiper systems

Windscreen wiper

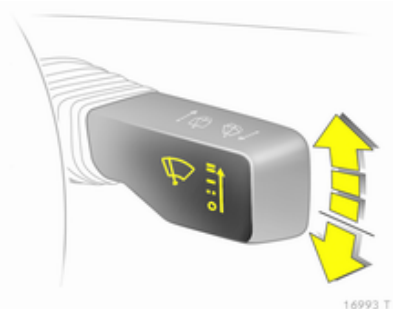

═ = fast
— = slow
- - = timed interval wipe or automatic wiping with rain sensor
O = off

For a single swipe when the windscreen wiper is off, press the lever down.

Windscreen wiper ⇨ 78, Wiper blade replacement ⇨ 159.

Windscreen and headlight washer systems

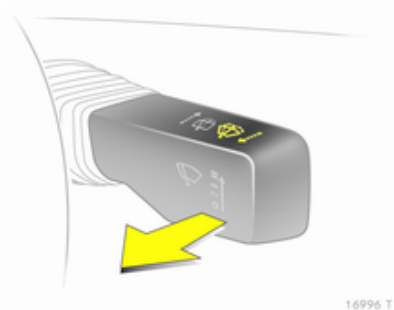

Pull lever.

Windscreen and headlight washer system ⇨ 78, Washer fluid ⇨ 157.

Rear window wiper and washer systems

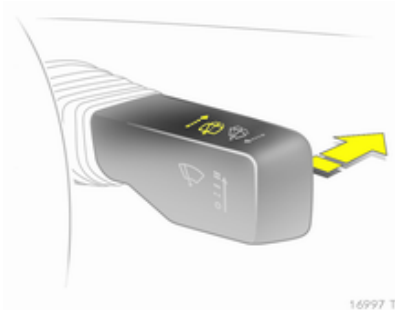

Wipers on = push lever
Wipers off = push lever again
Wash = push lever and hold

Rear window wipers and washer system ⇨ 79, Wiper blade replacement ⇨ 159, Washer fluid ⇨ 157.

Climate control

Heated rear window, heated exterior mirrors

Heating is operated by pressing the button.

Heated rear window ⇨ 43.

Demisting and defrosting the windows

Air distribution to ⛐.

Set temperature control to warmest level.

Set fan speed to highest level or to **A**.

Cooling ❄ on.

Press button ⛐.

Climate control system ⇨ 117.

Transmission

Manual transmission

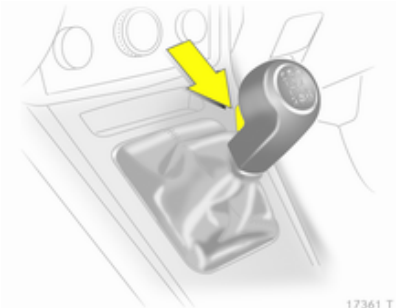

Reverse: with the vehicle stationary, wait 3 seconds after depressing clutch pedal and then press the release button on the selector lever and engage the gear.

If the gear does not engage, set the lever to neutral, release the clutch pedal and depress again; then repeat gear selection.

Manual transmission ⇨ 134.

Manual transmission automated

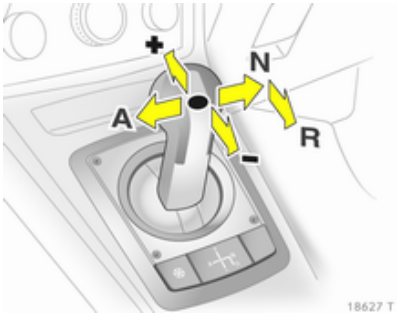

N = neutral position
● = drive position
+ = higher gear
- = lower gear
A = switch between Automatic and Manual mode
R = reverse gear (with selector lever lock)

Manual transmission automated ⇨ 135.

Automatic transmission

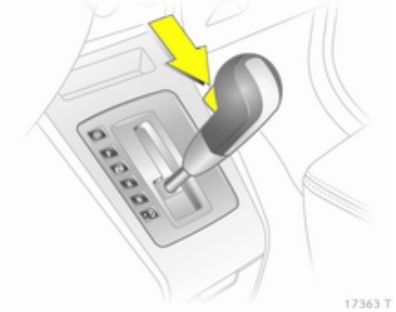

P = park position
R = reverse gear
N = neutral position
D = drive

The selector lever can only be moved out of **P** or **N** when the ignition is on and the foot brake is depressed (selector lever lock). To engage **P** or **R**, press the release button on selector lever.

The automatic transmission is available in two versions ⇨ 129.

Starting off

Check before starting off

- Tyre pressure and condition ⇨ 175, ⇨ 211.
- Engine oil level and fluid levels ⇨ 155.
- All windows, mirrors, exterior lighting and number plates are free from dirt, snow and ice and are operational.
- Proper position of seats, seat belts and mirrors ⇨ 46, ⇨ 55, ⇨ 38.
- Brake function at low speed, particularly if the brakes are wet.

Starting engine with ignition switch

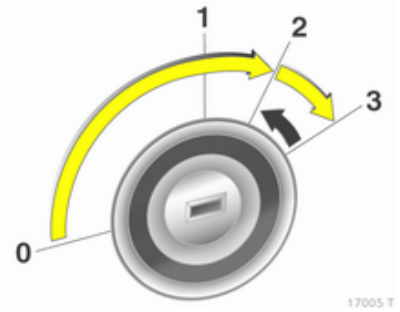

- Turn key to position 1
- Move the steering wheel slightly to release the steering wheel lock
- Operate clutch and brake, automatic transmission in **P** or **N**
- Do not operate the accelerator pedal
- Diesel engines, turn the key to position 2 for preheating and wait until control indicator ⌇ goes out
- Turn key to 3 and release key when engine is running.

Starting engine with Start/Stop button

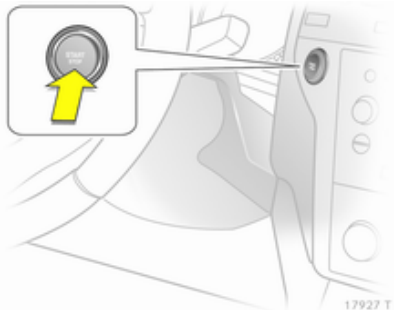

The electronic key must be inside the vehicle.

- Operate clutch and brake, automatic transmission in **P** or **N**
- Do not operate the accelerator pedal
- Diesel engine, press the button briefly to start preheating, move the steering wheel slightly to release the steering wheel lock, wait until control indicator ⚷ goes out
- Press button for 1 second and release when the engine is running.

Open&Start system ⇨ 29.

Parking

- Always apply the parking brake without pressing the release button. Apply as firmly as possible on a downhill slope or uphill slope. Depress the foot brake at the same time to reduce operating force.
- Switch off the engine. Turn the ignition key to 0 and remove it or, with the vehicle stationary, press the Start/Stop button and open the driver's door. Turn the steering wheel until the steering wheel lock is felt to engage.

  For vehicles with automatic transmission, the key can only be removed when the selector lever is in the **P** position. If **P** is not engaged or the parking brake is not applied, "P" flashes for a few seconds in the transmission display.
- If the vehicle is on a level surface or uphill slope, engage first gear or set the selector lever to **P** before switching off the ignition. On an uphill slope, turn the front wheels away from the kerb.

If the vehicle is on a downhill slope, engage reverse gear or set the selector lever to **P** before switching off the ignition. Turn the front wheels towards the kerb.

- Lock the vehicle with button ⚌ on the radio remote control or with the sensor in a front door handle.

  To activate the anti-theft locking system and the anti-theft alarm system, press button ⚌ twice or touch the sensor in a front door handle twice.
- Do not park the vehicle on an easily ignitable surface. The high temperature of the exhaust system could ignite the surface.
- On vehicles with manual transmission automated, control indicator (!) flashes for a few seconds after the ignition is switched off if the parking brake has not been applied ⇨ 101.
- Close windows.
- The engine cooling fans may run after the engine has been switched off ⇨ 154.
- After running at high engine speeds or with high engine loads, operate the engine briefly at a low load or run in neutral for approx.
  30 seconds before switching off, in order to protect the turbocharger.

Keys, locking ⇨ 27, Laying the vehicle up for a long period of time ⇨ 153.

Notable features

Seats in second row

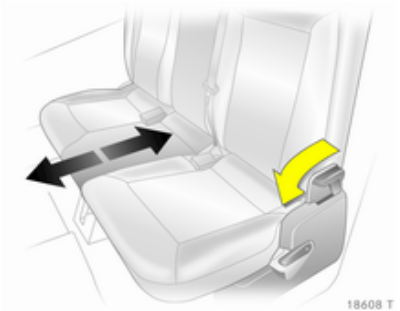

⚠ Warning

When the row of seats or the backrests are being adjusted, keep hands away from the hinge area.

Moving seats

Push the release lever forward and slide the seat row. Release the lever and audibly engage the seats.

Adjust backrests of outboard seats

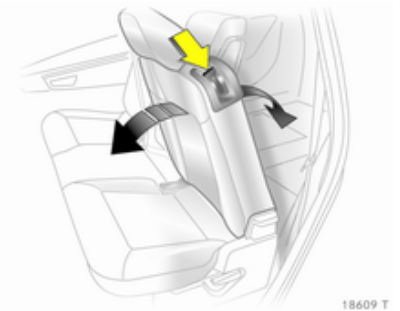

Push the release lever down, adjust inclination, release the lever and engage the backrest.

⚠ Warning

Occupants may only travel on a seat if its backrest is properly engaged in the upright position.

Seats in third row

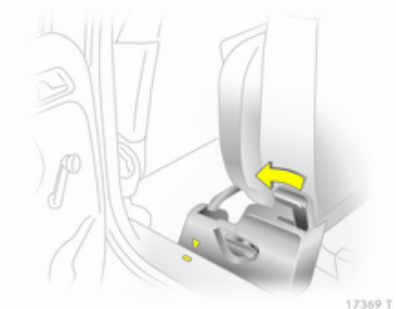

⚠ Warning

When the seats are being moved upright or folded in, keep hands away from hinge area.

Setting up seats

Remove floor covering ⇨ 70 and load compartment cover ⇨ 69.

Push the lever forward and slide the second row of seats forward to the mark.

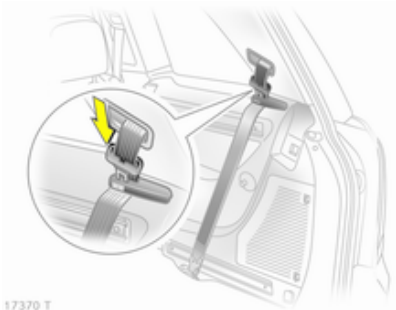

Guide the seat belts through the belt holders and insert the latch plates in the holders.

⚠ Warning

On version with side rails in load compartment, follow the descriptions ⇨ 71.

From the luggage compartment, pull up the seat by the handle.

Swivel the seat rearward until it is upright and audibly engages. Support the top of the backrest with your hand.

Preparing belt buckles for use ⇨ 55, Load compartment cover ⇨ 69.

⚠ Warning

The belt must not be routed through the belt holder when the seat belt is in use.

Slide the second row of seats to the required position and engage.

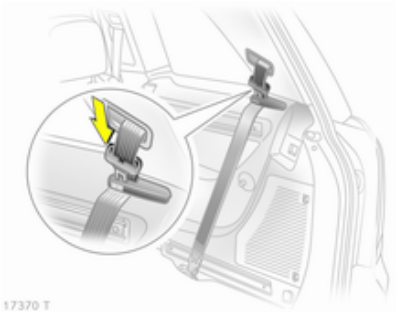

Storing seats

Remove the load compartment cover ⇨ 69.

Push the lever forward and slide the second row of seats forward to the mark.

Press the catch to release and slide the head restraints of the third row all the way down.

Guide the seat belts through the belt holders and insert the latch plates in the holders.

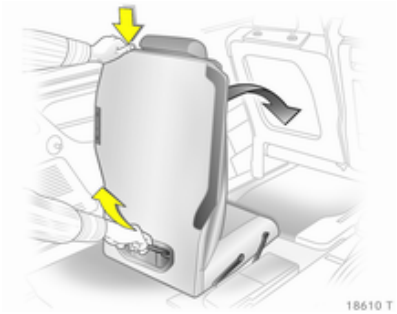

From the luggage compartment, press the button on the top of the backrest and lower the backrest. Using the handle on the seat, pull rearwards and upwards and then swing the seat forwards until it is lowered into the vehicle floor. Hold the seat by the handle during the entire procedure.

Retract belt buckle ⇨ 55 and install floor covering ⇨ 70 and load compartment cover ⇨ 69.

Slide the second row of seats to the required position and engage.

Active head restraints on front seats

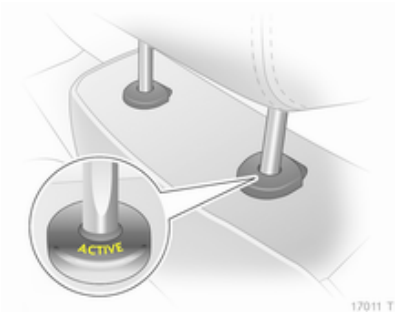

In the event of a rear-end impact, the active head restraints tilt forwards slightly. The head is more effectively supported by the head restraint and the risk of whiplash injury is reduced.

Active head restraints can be recognised by the word **ACTIVE**.

Head restraints ⇨ 44.

Trip computer

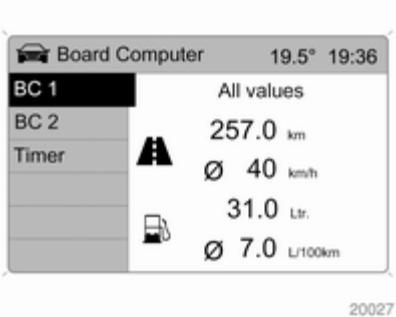

Functions:

- Range
- Instantaneous consumption
- Distance
- Average speed
- Absolute consumption
- Average consumption
- Stop watch
- Tyre pressure

Trip computer ⇨ 104, ⇨ 105.

Check control

The check control monitors:

- Fluid levels
- Tyre pressure
- Radio remote control battery
- Anti-theft alarm system
- Important exterior lighting bulbs, including cables and fuses.

Display messages ⇨ 101.

Sport mode

Activate by pressing the **SPORT** button.

The Sport mode is used to make suspension and steering more direct. The engine is more responsive to throttle application. With manual transmission automated and automatic transmission, gear changing is altered.

Sport mode ⇨ 141.

FlexOrganizer

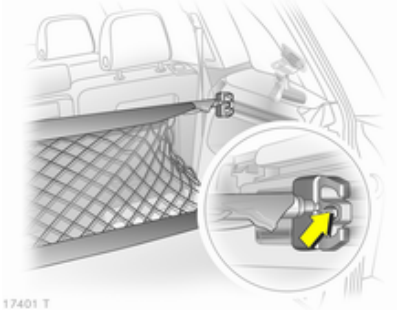

The side walls contain retaining strips, where various components can be attached to divide the load compartment or fasten loads.

The system consists of

- adapters
- variable partition net
- mesh pockets for the side walls
- hooks in the load compartment

FlexOrganizer ⇨ 71.

Tyre deflation detection system

If a tyre loses pressure, it becomes smaller. It then rotates at a different speed than the other tyres. If the system detects a difference in speed, control indicator (!) illuminates red.

Deflation Detection System ⇨ 177.

Tyre pressure monitoring system

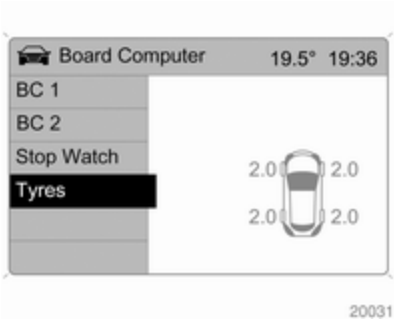

A pressure sensor is integrated in each wheel to monitor tyre pressure.

Whilst driving, the current tyre pressures appear in the **Board Computer** menu.

Deviating tyre pressure is displayed in the form of a message in the Info-Display.

Tyre pressure monitoring system ⇨ 176.

Adaptive Forward Lighting

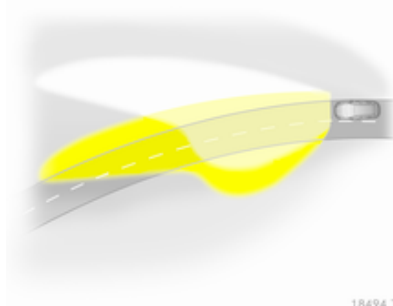

The system improves lighting of curves and increases the headlight range.

The beam pivots based on steering wheel position and vehicle speed.

At higher speeds and continuous straight ahead travel, the beam automatically raises slightly, thereby increasing headlight range.

Adaptive Forward Lighting ⇨ 111.

Natural gas operation

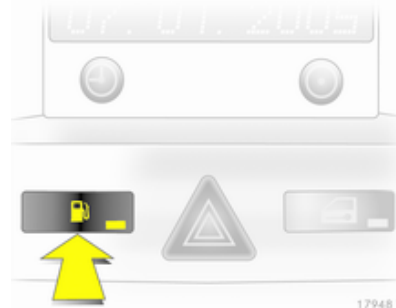

This specially developed engine is designed for the use of natural gas and petrol.

The ⛽ button is used to switch between petrol and natural gas operation.

The status of the LED indicates the type of fuel in use.

Natural gas operation	=	LED off.
Petrol operation	=	LED illuminates.

Natural gas ⇨ 85, ⇨ 145.

Diesel particle filter

The diesel particle filter system filters harmful soot particles out of the exhaust gases. The system includes a self-cleaning function that runs automatically during driving. The filter is cleaned by burning off the soot particles at high temperature. This process takes place automatically under set driving conditions and may take up to 25 minutes. Fuel consumption may be higher during this period. The emission of smells and smoke during this process is normal.

Under certain driving conditions, e.g. short distances, the system cannot clean itself automatically.

If the filter requires cleaning and previous driving conditions did not enable automatic cleaning, control indicator flashes.

Further instructions ⇨ 128.

Keys, doors and windows

Keys, locks 27
Doors 35
Vehicle security 36
Exterior mirrors 38
Interior mirrors 40
Windows 40
Roof 43

Keys, locks

Keys

Replacement keys

The key number is specified in the Car Pass or on a detachable tag.

The key number must be quoted when ordering replacement keys as it is a component of the immobiliser system.

When electronic keys of the Open&Start system are being replaced, all keys requiring programming must be handed over to the dealer.

Locks ⇨ 189, Open&Start system, electronic key ⇨ 29.

Key with foldaway key section

Press button to extend. To fold the key, first press the button.

Car Pass

The Car Pass contains security related vehicle data and should therefore be kept in a safe place.

When the car is taken to a workshop, this vehicle data is needed in order to perform certain operations.

Radio remote control

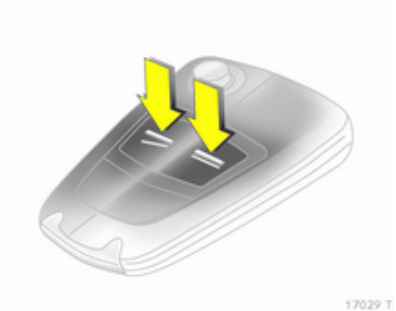

Used to operate:

- Central locking system,
- Anti-theft locking system,
- Anti-theft alarm system,
- Power windows.

The radio remote control has a range of approx. 5 metres. This range can be affected by outside influences. The hazard warning flashers confirm operation.

Handle with care, protect from moisture and high temperatures and avoid unnecessary operation.

Fault

If the central locking system cannot be operated with the radio remote control, it may be due to the following:

- Range exceeded,
- Battery voltage too low,
- Frequent, repeated operation of the radio remote control while not in range, which will require re-synchronisation,
- Overload of the central locking system by operating at frequent intervals, the power supply is interrupted for a short time,
- Interference from higher-power radio waves from other sources.

Unlocking ⇨ 32.

Radio remote control battery replacement

Replace the battery as soon as the range reduces.

Batteries do not belong in household waste. They must be disposed of at an appropriate recycling collection point.

Key with foldaway key section

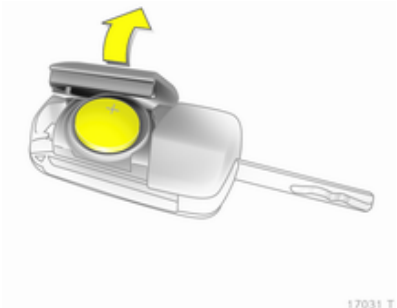

Extend the key and open the unit. Replace the battery (battery type CR 2032), paying attention to the installation position. Close the unit and synchronise.

Key with fixed key section

Have the battery replaced by a workshop.

Radio remote control synchronisation

After replacing the battery, unlock the door with the key in the driver's door lock. The radio remote control will be synchronised when you switch on the ignition.

Memorised settings

Whenever the vehicle is locked the last settings are automatically saved specifically for the used key:

- Electronic climate control,
- Info-Display,
- Infotainment system,
- Instrument panel illumination.

The saved settings are automatically used next time that key is used for unlocking.

Open&Start system

Makes operation of the following possible without the use of the mechanical key

- Central locking system,
- Anti-theft locking system,
- Anti-theft alarm system,
- Power windows,
- Ignition and starter.

The electronic key simply needs to be in the driver's possession.

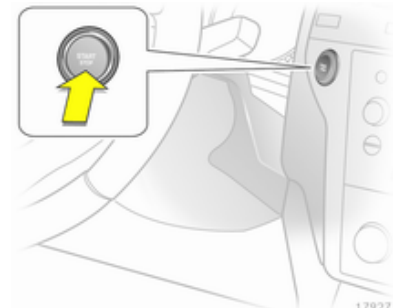

Press the **Start/Stop** button. The ignition is switched on. The immobiliser and steering wheel lock are deactivated.

To start the engine press and hold the **Start/Stop** button whilst applying both the brake and clutch pedals.

Automatic transmission: the engine can only be started with the selector lever in **P** or **N**.

The engine and the ignition are switched off by pressing the **Start/Stop** button again. The vehicle must be stationary. The immobiliser is activated at the same time.

If the ignition has been switched off and the vehicle is stationary, the steering wheel lock activates automatically when the driver's door is opened or closed.

Control indicator ⇨ 93.

Note

Do not put the electronic key in the load compartment or in front of the Info-Display.

The sensor fields in the door handles must be kept clean to ensure unrestricted functionality.

If the battery is discharged, the vehicle must not be towed, tow-started or jump-started as the steering wheel lock cannot be disengaged.

Radio remote control

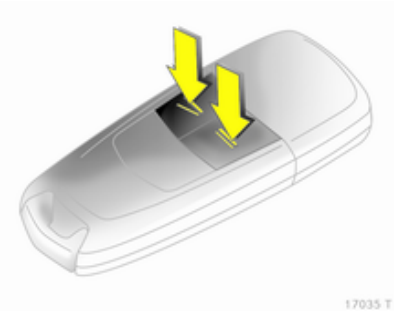

The electronic key likewise has a radio remote control feature.

Emergency operation

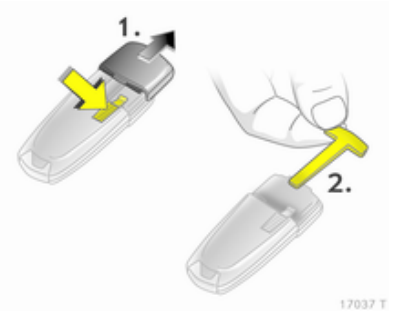

If the radio remote control also fails, the driver's door can be locked or unlocked with the emergency key contained in the electronic key: press locking mechanism and remove the cap by applying light pressure. Push emergency key towards the outside over the detent and remove.

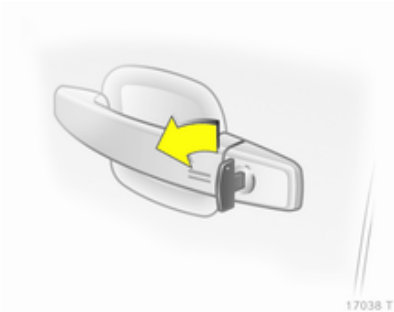

The emergency key can only lock or unlock the driver's door. Unlocking the entire vehicle ⇨ 32. On vehicles with anti-theft alarm system, the alarm may be triggered when the vehicle is unlocked. Deactivate the alarm by switching on the ignition.

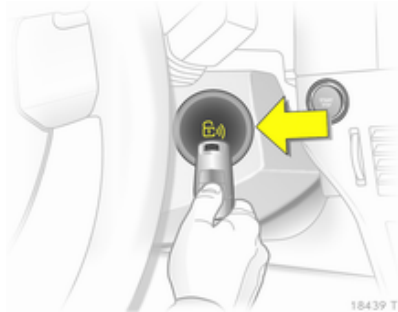

Hold the electronic key at the marked position and press the **Start/Stop** button.

To switch off the engine, press the **Start/Stop** button for at least 2 seconds.

Lock the driver's door with the emergency key. Locking the entire vehicle ⇨ 32.

This option is intended for emergencies only. Seek the assistance of a workshop.

Replacing battery in electronic key

Replace the battery as soon as the system no longer operates properly or the range is reduced. The need for battery replacement is indicated by **InSP3** in the service display or by a check control message in the Info-Display ⇨ 102.

Batteries do not belong in household waste. They must be disposed of at an appropriate recycling collection point.

To replace the battery, press the locking mechanism and remove the cap by applying light pressure. Press the cap on the other side outward.

Replace the battery (battery type CR 2032), noting the installation position. Engage caps.

Radio remote control synchronisation

The radio remote control synchronises itself automatically during every starting procedure.

Fault

If the central locking cannot be operated or the engine cannot be started, the cause may be one of the following:

- Fault in remote control ⇨ 28,
- electronic key out of reception range.

To rectify the cause of the fault, change the position of the electronic key.

Central locking system

Unlocks and locks doors, load compartment and fuel filler flap.

A pull on an interior door handle unlocks the entire vehicle and opens the door.

Note
In the event of an accident of a certain severity, the vehicle unlocks automatically.

Unlocking

Radio remote control

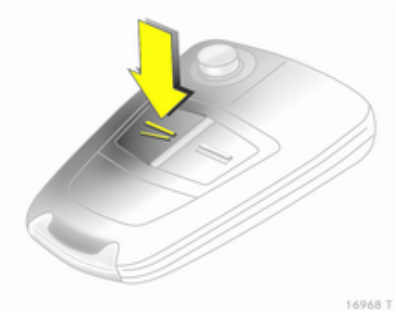

Press button ⊿.

Electronic key

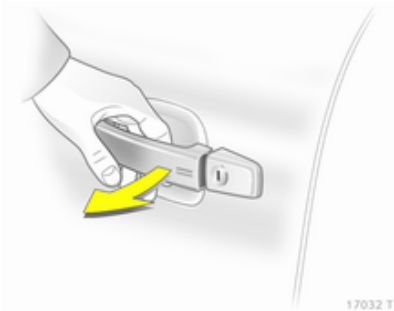

Pull a door handle or press the button under the tailgate moulding.

The electronic key must be outside the vehicle, within a range of approx. 1 metre.

Locking

Close doors, load compartment and fuel filler flap. If the driver's door is not closed properly, the central locking system will not work.

Radio remote control

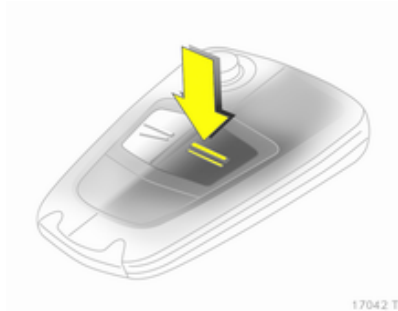

Press button ⚌.

Electronic key

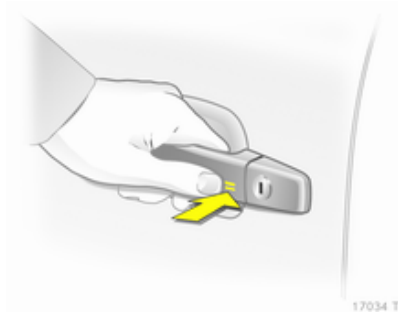

Touch the sensor field in the door handle of one of the front doors.

The electronic key must be outside the vehicle, within a range of approx. 1 metre. The other electronic key must not be inside the vehicle.

2 seconds must pass before the vehicle can be unlocked. Within this time, it is possible to check that the vehicle is locked.

Note
The vehicle is not automatically locked.

Central locking button

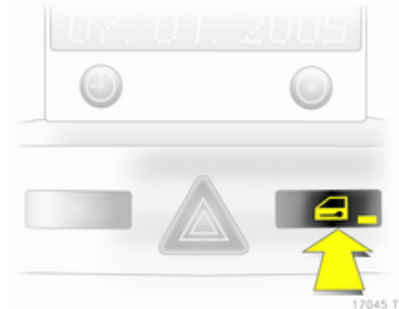

Press the button: the doors are locked or unlocked.

The LED in the button illuminates for approx. 2 minutes after locking with the radio remote control.

If the doors are locked from the inside whilst driving, the LED remains lit.

Fault in remote control or electronic key

Unlocking

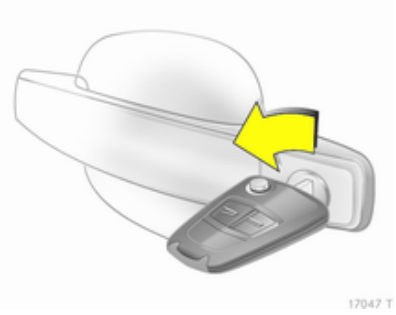

Turn key or emergency key ⇨ 29 in the driver's door lock as far as it will go. The entire vehicle is unlocked when the driver's door is opened.

Locking

Close the driver's door, open the passenger door, press central locking button . The vehicle is locked. Close the passenger door.

Fault in central locking system

Unlocking

Turn key or emergency key ⇨ 29 in the driver's door lock as far as it will go. The other doors can be opened by using the interior handle (not possible if the anti-theft locking system is active). The load compartment and fuel filler flap remain locked. To deactivate the anti-theft locking system, switch on the ignition ⇨ 36.

Locking

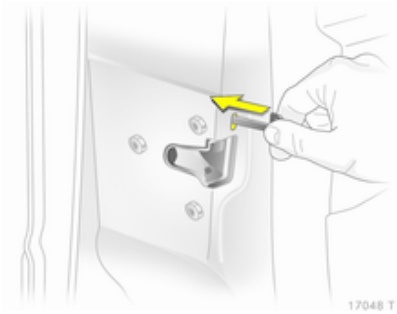

Insert key or emergency key ⇨ 29 into opening above lock on inside of door and operate lock by pressing until it clicks. Then close the door. The procedure must be carried out for each door. The driver's door can also be locked from the outside with the key. The fuel filler flap and tailgate cannot be locked.

Child locks

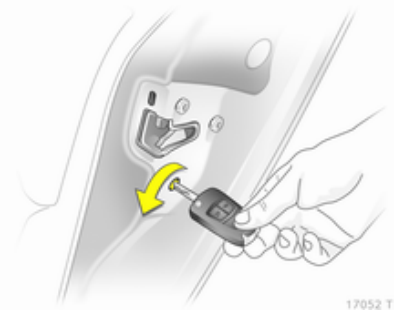

⚠Warning

Use the child locks whenever children are occupying the rear seats.

Using a key or suitable screwdriver, turn button on rear door lock to the horizontal position. The door cannot be opened from inside.

Doors

Load compartment

Opening

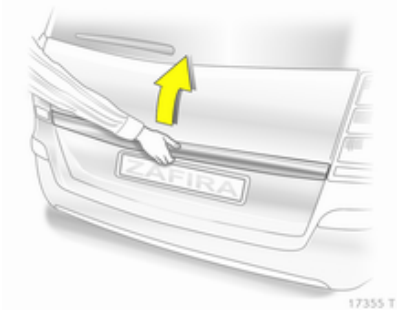

Press the button underneath the moulding.

⚠Warning

Do not drive with the tailgate open or ajar, e.g. when transporting bulky objects, as toxic exhaust gases could enter the vehicle.

Note
The installation of certain heavy accessories onto the tailgate may affect its ability to remain open.

Closing

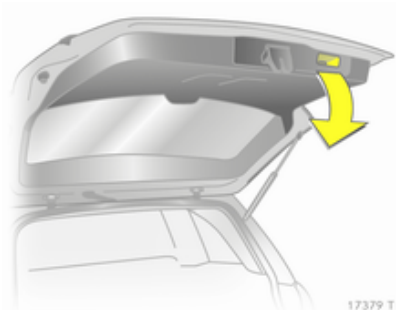

Use the interior handle.

Do not press the button under the moulding while closing as this will unlock the tailgate again.

Vehicle security

Anti-theft locking system

⚠Warning
Do not use the system if there are people in the vehicle! The doors cannot be unlocked from the inside.

The system deadlocks all the doors. All doors must be closed or the system cannot be activated.

If the ignition was on, the driver's door must be opened and closed once so that the vehicle can be secured.

Unlocking the vehicle disables the mechanical anti-theft locking system. This is not possible with the central locking button.

Activating with the radio remote control

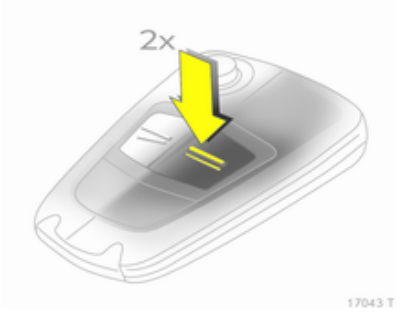

Press ⚌ twice within 15 seconds.

Activating with the electronic key

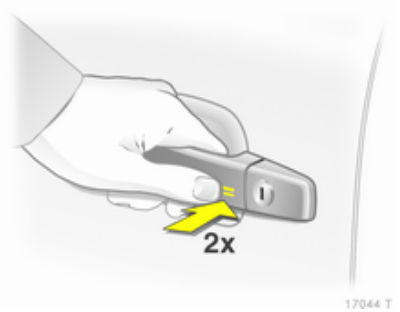

Touch the sensor field in the front door handle twice within 15 seconds.

The electronic key must be outside the vehicle, within a range of approx. 1 metre.

Anti-theft alarm system

The anti-theft alarm system incorporates and is operated in conjunction with the anti-theft locking system.

It monitors:

- Doors, load compartment, bonnet,
- Passenger compartment,
- Vehicle inclination, e.g. if it is raised,
- Ignition.

Activation

The system is activated by pressing ⚌ on the radio remote control or by touching the sensor field in the front door handle once more after locking.

Note
Changes to the vehicle interior such as the use of seat covers and open windows, could impair the function of passenger compartment monitoring.

Activation without monitoring of passenger compartment and vehicle inclination

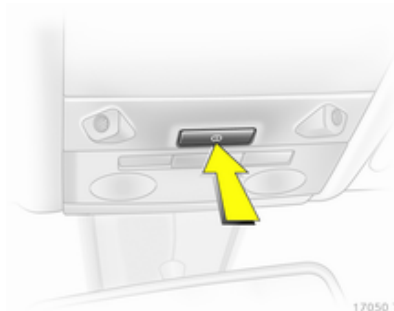

Switch off the monitoring of passenger compartment and vehicle inclination, when animals are being left in the vehicle, because of high volume ultrasonic signals or movements triggering the alarm. Switch off as well, when the vehicle is on a ferry or train.

1. Close load compartment, bonnet and windows.
2. Press button ①. The LED in button 🚗 flashes for a maximum of 10 seconds
3. Close doors.
4. Activate the anti-theft alarm system. The LED illuminates. After approx. 10 seconds, the system is armed. The LED flashes until the system is deactivated.

Light-emitting diode (LED)

During the first 10 seconds of anti-theft alarm system activation:

LED illuminates	=	Test, ignition delay,
LED flashes quickly	=	Door, load compartment or bonnet open, or system fault.

After the first 10 seconds of anti-theft alarm system activation:

LED flashes slowly	=	System active,
LED comes on for approx. 1 second	=	Switch off function.

Seek the assistance of a workshop in the event of faults.

Deactivation

Unlocking the vehicle deactivates the anti-theft alarm system.

Alarm

When triggered, the alarm gives off an acoustic signal (horn) and a visual signal (hazard warning flashers). The number and duration of which are stipulated by legislation.

The alarm siren can be silenced by pressing a button of the radio remote control or by switching on the ignition.

The anti-theft alarm system can be deactivated only by pressing button ⚌ or by switching on the ignition.

Immobiliser

The system checks whether the vehicle is allowed to start with the key being used. If the transponder in the key is recognised, the engine can be started.

The immobiliser is going to be activated automatically after the key has been removed from the ignition switch or when the engine is switched off by pressing the **Start/Stop** button.

Control indicator ⇨ 89.

Note
The immobiliser does not lock the doors. You should always lock the vehicle after leaving it and switch on the anti-theft alarm system ⇨ 32, ⇨ 36.

Exterior mirrors

Convex shape

The convex exterior mirror contains an aspherical area and reduces blind spots. The shape of the mirror makes objects appear smaller, which will affect the ability to estimate distances.

Electric adjustment

First select the relevant exterior mirror then swivel the control to adjust.

Folding

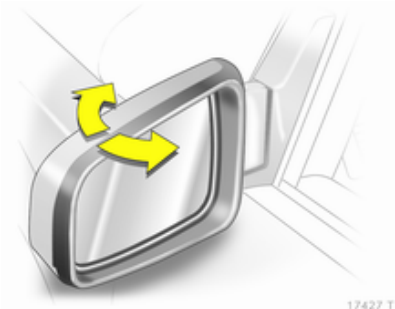

For pedestrian safety, the exterior mirrors will swing out of their normal mounting position if they are struck with sufficient force. Reposition the mirror by applying slight pressure to the mirror housing.

Manual folding

The exterior mirrors can be folded in by pressing gently on the outer edge of the housing.

Electric folding

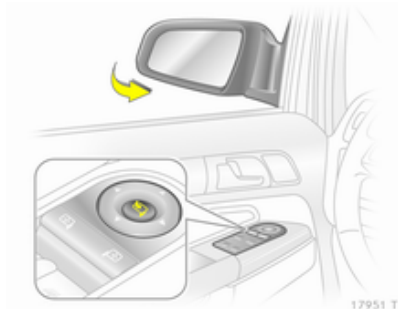

Press the button and both exterior mirrors will fold.

Press button again - both exterior mirrors return to their original position.

If an electrically folded mirror is manually extended, pressing the button will only electrically extend the other mirror.

Heated

Operated by pressing the button.

Heating functions with the engine running and is switched off automatically after a short time.

Interior mirrors

Manual anti-dazzle

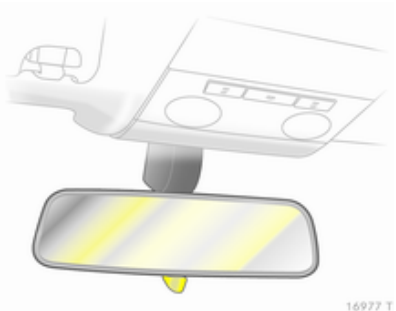

To reduce dazzle, adjust the lever on the underside of the mirror housing.

Automatic anti-dazzle

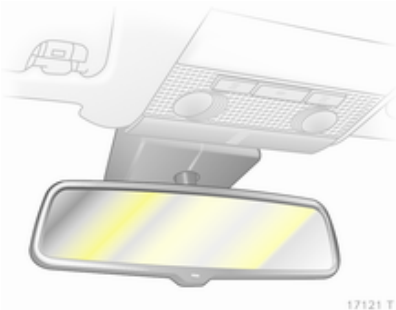

Dazzle from following vehicles at night is automatically reduced.

Windows

Windscreen

Heat-reflecting windscreen

The heat-reflecting windscreen has a coating which reflects solar radiation. Also data signals, e.g. from toll stations, might be reflected.

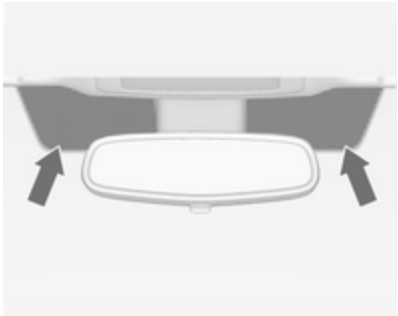

The marked areas on the windscreen are not covered with the coating. Devices for electronic data recording and fee payment must be attached in these areas. Otherwise data recording malfunctions may occur.

Windscreen stickers

Do not attach stickers such as toll road stickers or similar on the windscreen in the area of the interior mirror. Otherwise the detection zone of the sensor and the view area of the camera in the mirror housing could be restricted.

Manual windows

The door windows can be opened or closed with the window winders.

Power windows

⚠Warning

Take care when operating the power windows. Risk of injury, particularly to children.

If there are children on the rear seats, switch on the child safety system for the electric windows.

Keep a close watch on the windows when closing them. Ensure that nothing becomes trapped in them as they move.

Power windows can be operated

- with ignition on,
- within 5 minutes of switching ignition off,
- within 5 minutes of switching ignition key to position 1.

After switching off the ignition, the standby feature ceases when the driver's door is opened.

Operate the control to open or close the window.

For vehicles with automatic feature pull or press the switch again to stop window movement.

Safety function

If the window glass encounters resistance above the middle of the window during automatic closing, it is immediately stopped and the window opened again.

In the event of closing difficulties due to frost or the like, operate the switch several times to close the window in stages.

Child safety system for rear windows

Switch ⊠ can be used to activate or deactivate the switches in the rear doors.

Operating windows from outside

The windows can be operated remotely from outside the vehicle.

Radio remote control

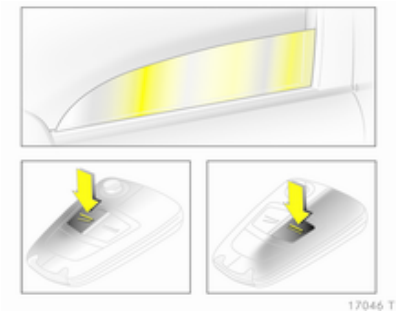

Press ⊼ or ⊽ until all windows have opened or closed.

Electronic key

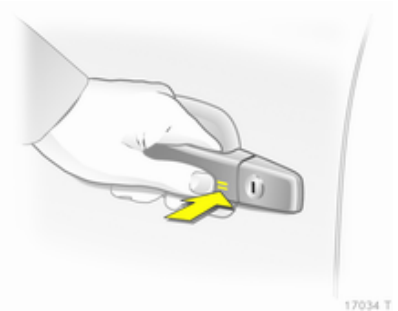

To close, touch the sensor field in the door handle until all windows are completely closed.

The electronic key must be outside the vehicle, within a range of approx. 1 metre.

Overload

If the windows are repeatedly operated within short intervals, the window operation is disabled for some time.

Fault

If the windows cannot be opened or closed automatically, activate the window electronics as follows:

1. Close doors.
2. Switch on ignition.
3. Close the window completely and operate the button for a further 5 seconds.
4. Open the window completely and operate the button for a further 1 second.
5. Repeat for each window.

Heated rear window

Operated by pressing the button.

Heating functions with the engine running and is switched off automatically after a short time.

Depending on the engine type, the heated rear window comes on automatically when the diesel particle filter is being cleaned.

Sun visors

The sun visors can be folded down or swivelled to the side to prevent dazzling.

If the sun visors have integral mirrors, the mirror covers should be closed when driving.

Roof

Moonroof

Do not affix any stickers to the middle part of the roof. Do not cover the vehicle using a tarpaulin.

Sunblind

The sunblind is electrically operated.

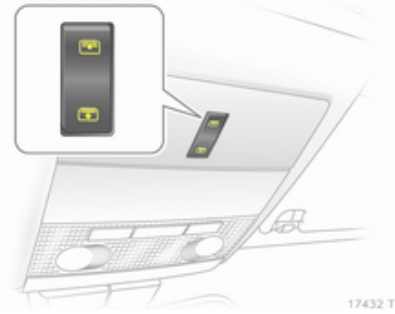

Press button to open and to close. Press and hold the button to close completely.

Seats, restraints

Head restraints 44
Front seats 46
Rear seats 50
Seat belts 54
Airbag system 58
Child restraints 61

Head restraints

Position

⚠Warning

Only drive with the head restraint set to the proper position.

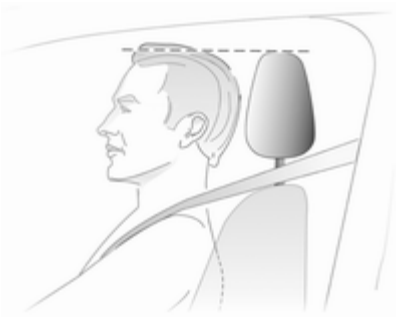

The upper edge of the head restraint should be at upper head level. If this is not possible for extremely tall people, set to highest position, and set to lowest position for small people.

Adjustment

Head restraints with release button

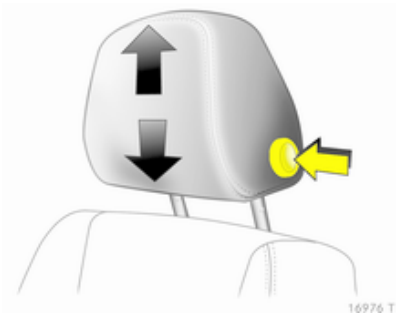

Press the button, adjust height and engage.

Head restraints without release button

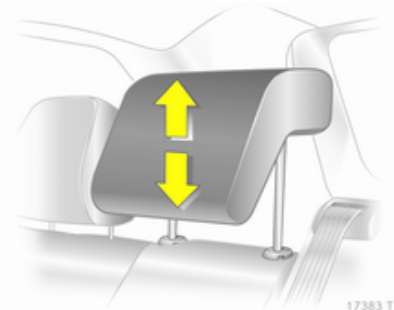

Pull the head restraint upwards or press the catch to release and push the head restraint downwards.

Removing

Press the catches and pull up the head restraint.

Active head restraints

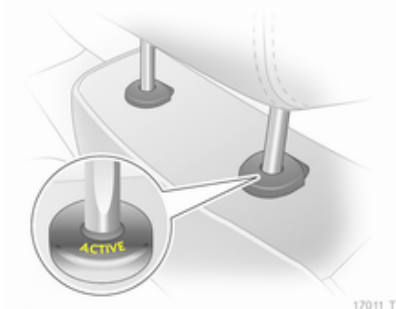

In the event of a rear-end impact, the active head restraints tilt slightly forwards. The head is more effectively supported so the risk of whiplash injury is reduced.

Active head restraints are identified by the lettering **ACTIVE** on the head restraint guide sleeves.

Note
Approved accessories may only be attached to the front passenger seat head restraint if the seat is not in use.

Front seats

Seat position

⚠ Warning

Only drive with the seat correctly adjusted.

- Sit with buttocks as far back against the backrest as possible. Adjust the distance between the seat and the pedals so that legs are slightly angled when pressing the pedals. Slide the front passenger seat as far back as possible.
- Sit with shoulders as far back against the backrest as possible. Set the backrest rake so that it is possible to easily reach the steering wheel with arms slightly bent. Maintain contact between shoulders and the backrest when turning the steering wheel. Do not angle the backrest too far back. We recommend a maximum rake of approx. 25°.
- Adjust the steering wheel ⇨ 77.
- Set seat height high enough to have a clear field of vision on all sides and of all display instruments. There should be at least one hand of clearance between head and the roof frame. Thighs should rest lightly on the seat without pressing into it.
- Adjust the head restraint ⇨ 44.
- Adjust the height of the seat belt ⇨ 55.
- Adjust the thigh support so that there is a space approx. two fingers wide between the edge of the seat and the hollow of the knee.
- Adjust the lumbar support so that it supports the natural shape of the spine.

Seat adjustment

⚠ Danger

Do not sit nearer than 25 cm from the steering wheel, to permit safe airbag deployment.

⚠ Warning

Never adjust seats while driving as they could move uncontrollably.

Seat positioning

Pull handle, slide seat, release handle.

Seat backrests

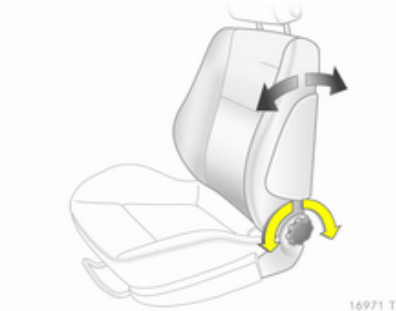

Turn handwheel. Do not lean on backrest when adjusting.

Seat height

Lever pumping motion

up = higher
down = lower

Seat inclination

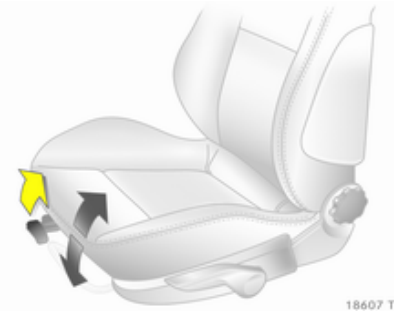

Pull lever, adjust inclination by shifting body weight. Release lever and audibly engage seat in position.

Lumbar support

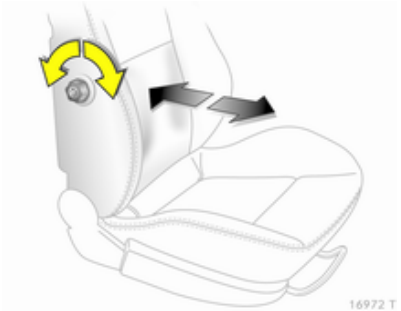

Turn handwheel. Do not lean on backrest when adjusting.

Adjustable thigh support

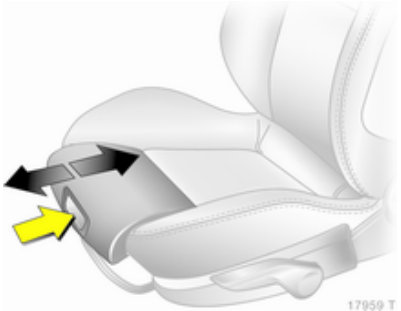

Press the button and slide the thigh support.

Seat folding

Push the head restraint down.

Slide the seat backwards.

Raise release lever, fold backrest forward and engage.

To restore the seat to the upright position, raise release lever and audibly engage backrest.

Armrest

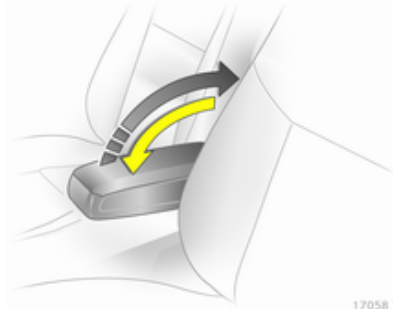

Push raised armrest backward against resistance and fold down.

The armrest can be moved to different positions in stages by lifting it.

Heating

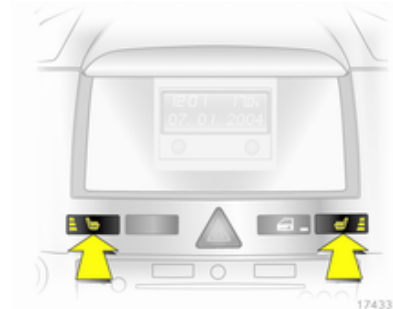

Adjust heating to the desired setting by pressing the button for the seat one or more times with the ignition on. The control indicator in the button indicates the setting.

Prolonged use of the highest setting for people with sensitive skin is not recommended.

Seat heating is operational when the engine is running.

Rear seats

Second row seats

⚠Warning

When the row of seats or the backrests are being adjusted, keep hands away from the hinge area.

Moving seat row

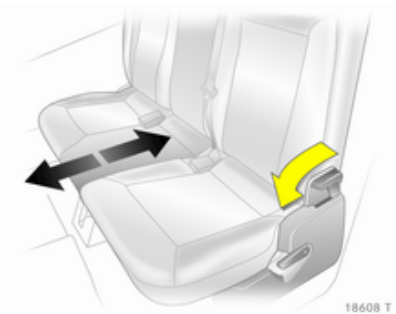

Push the release lever forwards and slide the row of seats. Release the lever and audibly engage the seats.

Folding seat row and sliding forwards

Remove the luggage compartment cover as required ⇨ 69.

Slide head restraints down ⇨ 44.

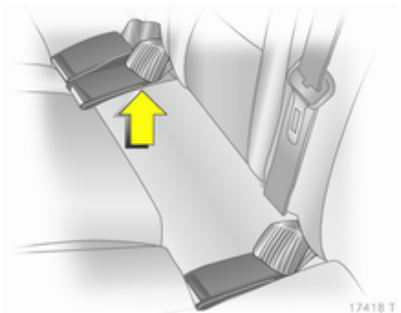

Place seat belt buckles in seat pockets.

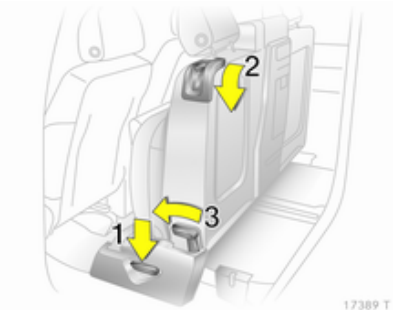

Press release lever **1** down and swivel the seat cushion upwards until it engages.

Press down release lever **2** on both sides, bring the backrest into the upright position and engage.

Pull handle on back of centre backrest, bring the backrest into the upright position and engage.

Press release lever **3**, slide the bench to the frontmost position and engage.

To restore, press release lever **3** and slide the bench to the required position. Adjust the backrest and use

release lever **1** to swivel the seat cushion downwards. All positions must audibly engage.

Adjust backrests of outboard seats

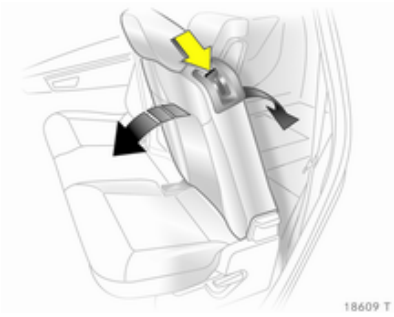

Press the release lever down, select one of the two inclinations, release the lever and engage the backrest.

> **⚠ Warning**
>
> Occupants may only travel on a seat if its backrest is properly engaged in the rearward inclined position.

> **⚠ Warning**
>
> Only drive the vehicle if the backrests are securely locked into position. Otherwise there is a risk of personal injury or damage to the load or vehicle in the event of heavy braking or a collision.

Folding down outboard backrests

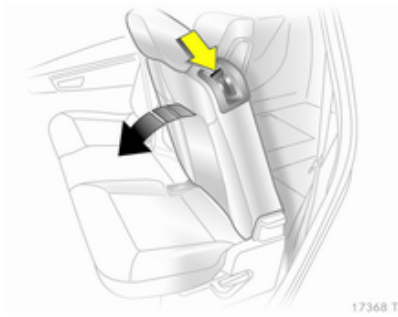

Remove the luggage compartment cover as required ⇨ 69.

Slide head restraints down ⇨ 44.

Place seat belt buckles in seat cushion pockets.

Press the release lever down, set the backrest to a vertical position or angled forward or fold it to the seat cushion and engage.

To move upright, push release lever down and latch backrest in required position.

Folding down middle backrest

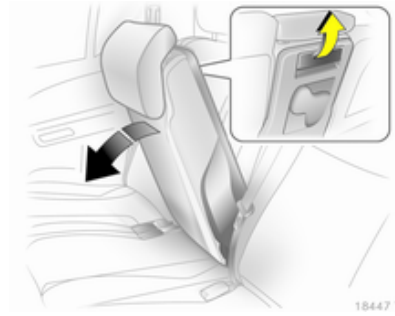

Slide the head restraint all the way down ⇨ 44.

Place seat belt buckles in seat cushion pockets.

Pull the handle on the back, set the backrest to a vertical position or fold to the seat cushion and engage.

To restore, pull the handle, straighten and engage in required position.

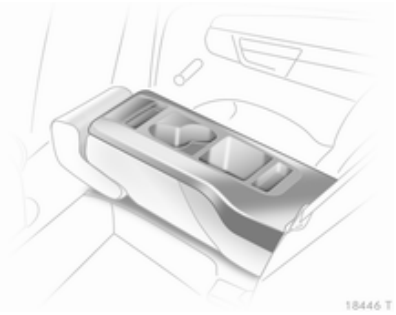

The centre seat backrest can be used as an armrest when folded down, and contains drink holders and stowage compartments.

Third row seats

⚠ Warning

When the seats are being set up or folded, keep hands away from hinge area.

Setting up seats

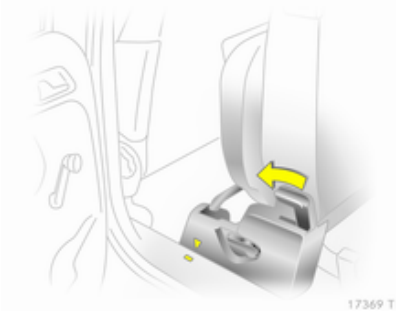

Remove the floor covering and load compartment cover ⇨ 70.

Push the lever forward and slide the second seat row forward to the mark.

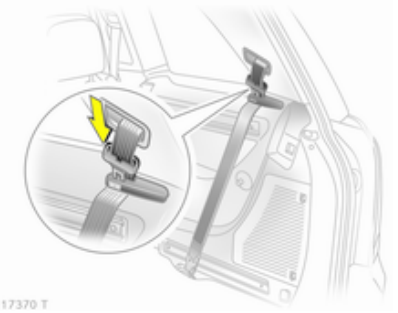

Guide the seat belts through the belt holders and insert the latch plates in the holders.

⚠ Warning

Before setting up, all components must be removed from the side rails and the seat belts hooked in the seat belt eyes in the floor of the vehicle without twisting.

From the luggage compartment, pull up the seat by the handle.

Slide the seat rearwards until it is upright and audibly engages. Support the top of the backrest with your hand.

Slide the second seat row to the required position and engage.

Seat belts ⇨ 55.

Stow the load compartment cover by installing it behind the third row of seats ⇨ 69.

Stowing seats

Remove the load compartment cover ⇨ 69.

Push the lever forwards and slide the second seat row forwards to the mark.

Press the catch to release and slide the head restraints of the third seat row all the way down.

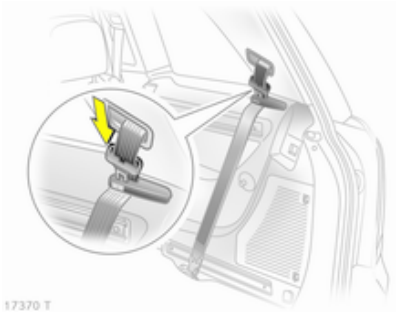

Guide the seat belts through the belt holders and insert the latch plates in the holders.

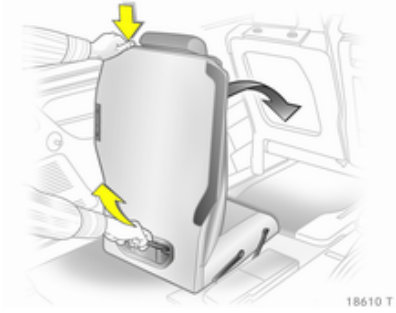

From the load compartment, press the button on the top of the backrest and lower the backrest. Using the handle on the seat, pull rearwards and upwards and then swing the seat forwards until it is lowered into the vehicle floor. Hold the seat by the handle during the entire procedure.

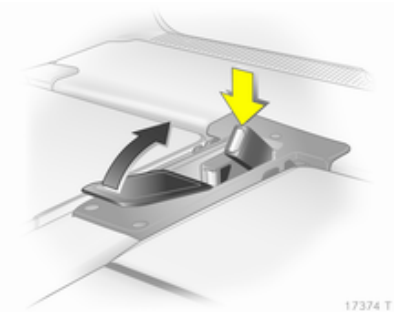

Push belt buckles into recess in floor and close cover.

Install the rear floor storage cover and load compartment cover ⇨ 70, ⇨ 69.

Slide the second row of seats to the required position and engage.

Seat belts

The belts are locked during heavy acceleration or deceleration of the vehicle for the safety of the occupants.

⚠ Warning

Fasten seat belt before each trip.

In the event of an accident, people not wearing seat belts endanger their fellow occupants and themselves.

Seat belts are only designed for use by one person at a time. Child restraint system ⇨ 61.

Periodically check all parts of the belt system for damage, pollution and proper functionality.

Have damaged components replaced. After an accident, have the belts and triggered belt tensioners replaced by a workshop.

Note
Make sure that the belts are not damaged by shoes or sharp-edged objects or trapped. Prevent dirt from getting into the belt retractors.

Seat belt control indicator ⇨ 88.

Belt force limiters

In the front seats, stress on the body is reduced by gradual release of the belt during a collision.

Belt tensioners

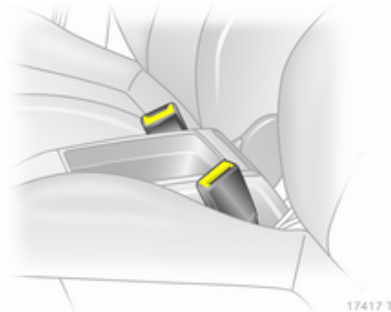

In the event of a head-on or rear-end collision of a certain severity, the front seat belts are tightened.

⚠ Warning

Incorrect handling (e.g. removal or fitting of belts) can trigger the belt tensioners.

Deployment of the belt tensioners is indicated by illumination of control indicator ⇨ 88.

Triggered belt tensioners must be replaced by a workshop. Belt tensioners can only be triggered once.

Note

Do not affix or install accessories or other objects that may interfere with the operation of the belt tensioners. Do not make any modifications to belt tensioner components as this will invalidate the vehicle type approval.

Three-point seat belt

Fitting

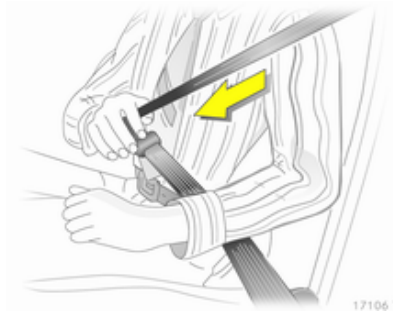

Withdraw belt from retractor, guide it untwisted across the body and insert the latch plate in the buckle. Tension the lap belt regularly whilst driving by tugging the shoulder belt.

Loose or bulky clothing prevents the belt from fitting snugly. Do not place objects such as handbags or mobile phones between the belt and your body.

⚠ Warning

The belt must not rest against hard or fragile objects in the pockets of your clothing.

Height adjustment

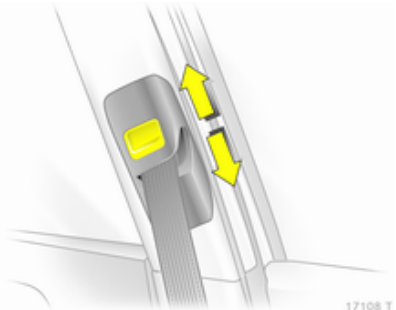

1. Pull belt out slightly.
2. Press button.
3. Adjust height and engage.

Adjust the height so that the belt lies across the shoulder. It must not lie across the throat or upper arm.

Do not adjust while driving.

Removing

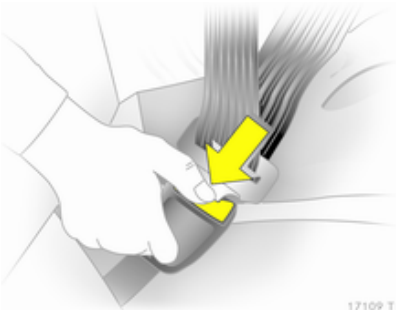

To release belt, press red button on belt buckle.

Seat belts in the second row

The seat belt for the middle seat can only be withdrawn from the retractor if the backrest is latched in the rearmost position

Seat belts in the third row

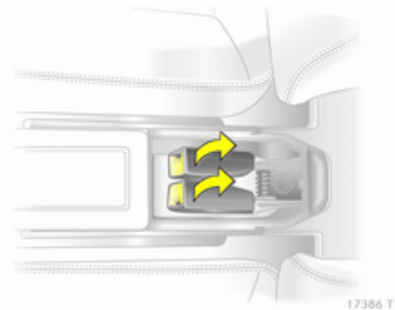

Open the cover in the floor between the seats and pull up the belt buckles.

Remove latch plate and belt from fixture.

⚠ Warning

The belt must not be routed through the belt holder when the seat belt is being applied.

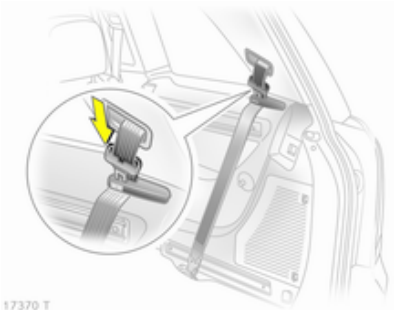

When not in use, guide the seat belt through the belt holder and insert the latch plate in the holder.

Unhookable seat belts in the third row

Detachable seat belts are identified by a label on the belt.

To use the side rails, the seat belts can be removed from the seat belt eyes in the vehicle floor.

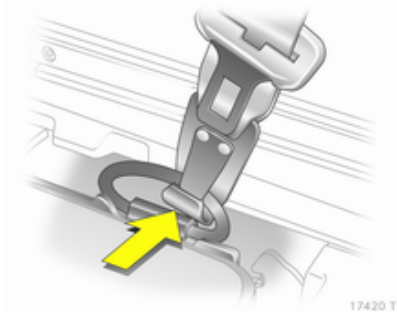

Press the spring catch and release the hook from the belt eye in the vehicle floor.

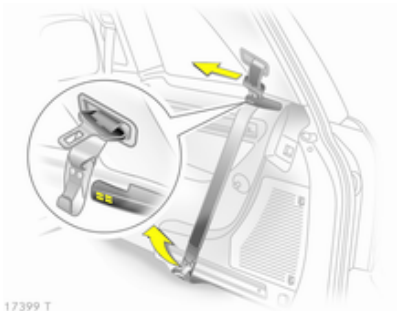

Reel the belt in and fasten the hook to the magnetic holder.

To hinge the seat belt, remove hook from magnetic holder, push spring-loaded tab of hook and attach to seat belt eye in floor of vehicle. The seat belt must not be twisted. The hook must be properly engaged in the seat belt eye with the spring-loaded tab closed again.

Note

The hook must only be attached to the eyes placed on the vehicle floor.

The eyes and the seat belts may not be used for lashing loads.

Using the seat belt while pregnant

⚠ Warning

The lap belt must be positioned as low as possible across the pelvis to prevent pressure on the abdomen.

Airbag system

The airbag system consists of a number of individual systems.

When triggered the airbag inflates within milliseconds. They also deflate so quickly that it is often unnoticeable during the collision.

⚠ Warning

If handled improperly the airbag systems can be triggered in an explosive manner.

Note
The airbag systems and belt pretensioner control electronics are located in the centre console area. Do not put any magnetic objects in this area.

Do not stick anything on the airbag covers and do not cover them with other materials.

Each airbag is triggered only once. Have deployed airbags replaced by a workshop. Furthermore, it might be necessary to have the steering wheel, the instrument panel, parts of the panelling, the door seals, handles and the seats replaced.

Do not make any modifications to the airbag system as this will invalidate the vehicle type approval.

When the airbags inflate, escaping hot gases may cause burns.

Control indicator for airbag systems ⇨ 88.

Front airbag system

The front airbag system consists of one airbag in the steering wheel and one in the instrument panel. These can be identified by the word **AIRBAG**.

Additionally there is a warning label on the side of the instrument panel, visible when the front passenger door is open, or on the passenger's sun visor.

The front airbag system is triggered in the event of an accident of a certain severity. The ignition must be on.

Seat occupancy recognition ⇨ 61.
Child restraint system with transponders ⇨ 65.

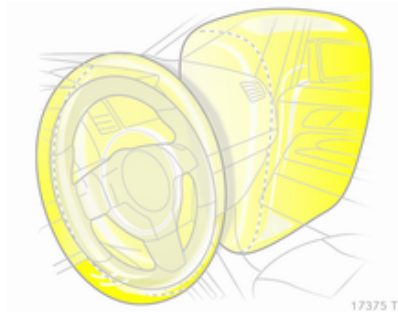

The forward movement of the front seat occupants is decelerated, thereby considerably reducing the risk of injury to the upper body and head.

⚠ Warning

Optimum protection is only provided when the seat is in the proper position ⇨ 46.

Keep the area in which the airbag inflates clear of obstructions.

Fit the seat belt correctly and engage securely. Only then the airbag is able to protect.

Side airbag system

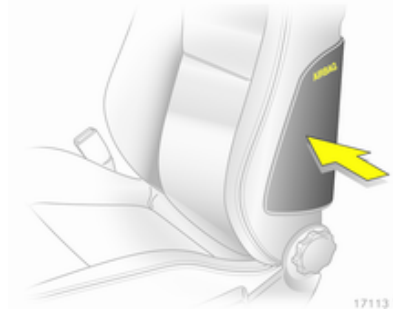

The side airbag system consists of an airbag in each front seat backrest. This can be identified by the word **AIRBAG**.

The side airbag system is triggered in the event of an accident of a certain severity. The ignition must be on.

Seat occupancy recognition ⇨ 61.
Child restraint system with transponders ⇨ 65.

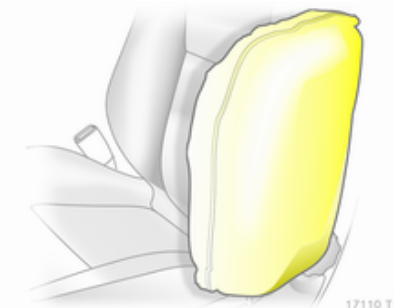

The risk of injury to the upper body and pelvis in the event of a side-on collision is considerably reduced.

⚠Warning

Keep the area in which the airbag inflates clear of obstructions.

Note
Only use protective seat covers that have been approved for the vehicle. Be careful not to cover the airbags.

Curtain airbag system

The curtain airbag system consists of an airbag in the roof frame on each side. This can be identified by the word **AIRBAG** on the roof pillar.

The curtain airbag system is triggered in the event of an accident of a certain severity. The ignition must be on.

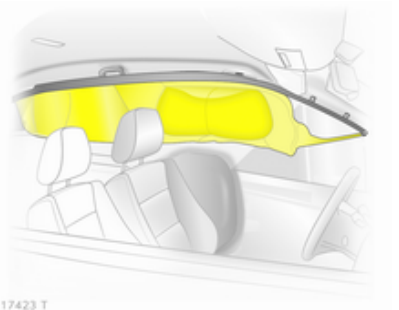

The risk of injury to the head in the event of a side impact is considerably reduced.

The curtain airbag system does not protect the third row of seats.

⚠Warning

Keep the area in which the airbag inflates clear of obstructions.

The hooks on the handles in the roof frame are only suitable for hanging up light articles of clothing, without coat hangers. Do not keep any items in these clothes.

Seat occupancy recognition

Identified by a label on the lower panel of the front passenger seat and by control indicator, which illuminates for approx. 4 seconds when the ignition is switched on.

The seat occupancy recognition system deactivates the passenger front and side airbag if the front passenger seat is not occupied or is fitted with an Opel child restraint system with transponders. The curtain airbag system remains activated.

⚠ Danger

Only Opel child restraint systems with transponders should be fitted on the front passenger seats. Use of systems without transponders poses a risk of fatal injury.

Control indicator ⇨ 88.

Note

Anyone weighing less than 35 kg should only travel on the rear seats.

Do not place any heavy objects on the front passenger seat. Otherwise the seat will register as occupied and the airbag system for the front passenger seat will not be deactivated.

Do not use protective covers or seat cushions on the front passenger seat.

Child restraints

Child restraint systems

We recommend the Opel child restraint system which is tailored specifically to the vehicle.

When a child restraint system is being used, pay attention to the following usage and installation instructions and also those supplied with the child restraint system.

Always comply with local or national regulations. In some countries, the use of child restraint systems is forbidden on certain seats.

Selecting the right system

The rear seats are the most convenient location to fasten a child restraint system. Children should travel facing rearwards in the vehicle as long as possible. This makes sure that the child's backbone, which is still very weak, is under less strain in the event of an accident.

Suitable are restraint systems that comply with ECE 44-03 or ECE 44-04. Check local laws and regulations for mandatory use of child restraint systems.

Never hold a child whilst travelling in the vehicle. The child will become too heavy to be held in the event of a collision.

When transporting children, use the child restraint systems suitable for the child's weight.

Ensure that the child restraint system to be installed is compatible with the vehicle type.

Ensure that the mounting location of the child restraint system within the vehicle is correct.

Only allow children to enter and exit the vehicle at the side facing away from the traffic.

When the child restraint system is not in use, secure the seat with a seat belt or remove it from the vehicle.

Note
Do not stick anything on the child restraint systems and do not cover them with any other materials.

A child restraint system which has been subjected to stress in an accident must be replaced.

Child restraint installation locations

Permissible options for fitting a child restraint system

Weight and age class[1)]	On front passenger seat	On outboard seats in the second row	On centre seat in the second row	On the seats in the third row
Group 0: up to 10 kg or approx. 10 months **Group 0+: up to 13 kg** or approx. 2 years	B[1], +	U, +	U	X
Group I: 9 to 18 kg or approx. 8 months to 4 years	B[2], +	U, +, ++	U	UF
Group II: 15 to 25 kg or approx. 3 to 7 years **Group III: 22 to 36 kg** or approx. 6 to 12 years	X	U	U	UF

B[1] = Limited, only with seat occupancy recognition and Opel child restraint system with transponders.
If the child restraint system is being secured using a three-point seat belt, move seat height adjustment to uppermost position. Move front passenger seat as far back as possible and move front passenger seat belt anchorage point to lowest position.

B[2] = Limited, only with seat occupancy recognition and Opel child restraint system with transponders.
If the child restraint system is being secured using a three-point seat belt, move seat height adjustment to uppermost position. Move front passenger seat as far back as possible so that vehicle safety belt runs from anchorage point towards the front.

U = Universal suitability in conjunction with three-point seat belt.

UF = Can be used universally for forward-facing child restraint systems in combination with a three-point seat belt.

\+ = Vehicle seat available with ISOFIX attachments. When attaching using ISOFIX, only the ISOFIX child restraint systems permitted for the vehicle may be used.

[1)] We recommend the use of each system until the child reaches the upper weight limit.

++ = Vehicle seat available with ISOFIX attachments. When attaching using ISOFIX and Top-tether, universally permitted ISOFIX child restraint systems may be used.
X = No child restraint system permitted in this weight class.

Isofix child restraint systems

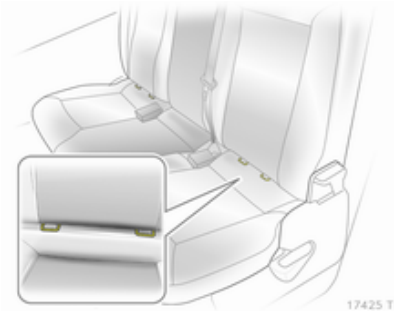

Fasten vehicle-approved ISOFIX child restraint systems to the mounting brackets.

Top-tether child restraint systems

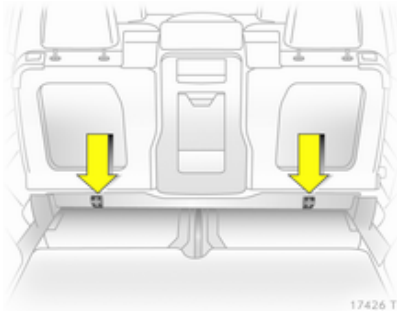

Fasten Top-tether child restraint systems to the fastening eyes of the second row of seats. The strap must run between the two guide rods of the head restraint.

When using ISOFIX and Top-tether for seat mounting, universally permitted child restraint systems for ISOFIX may be used.

Child restraints with transponders

A label on the child restraint system indicates that it is fitted with transponders.

Opel child restraint systems with transponders are automatically detected if correctly installed to the front passenger seat with seat occupancy recognition.

Note
There must be no objects (e.g. plastic sheet or heating mats) between the seat and the child restraint system.

Seat occupancy recognition ⇨ 61.

Storage

Storage compartments 67
Load compartment 69
Roof rack system 74
Loading information 75

Storage compartments

Glovebox

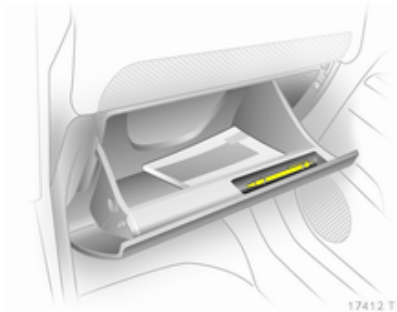

The glovebox features a pen holder.

The glovebox should be closed whilst driving.

Cupholders

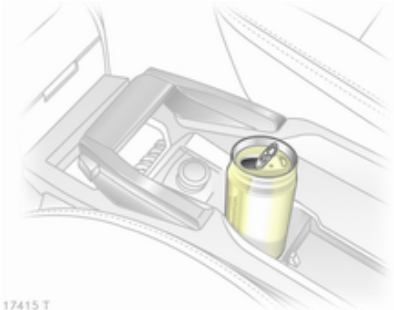

Cupholders are located in the centre console, in the doors and the rear side panelling.

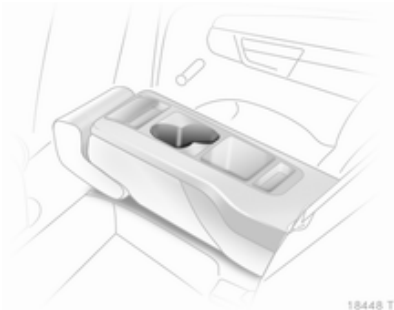

Additional cupholders are located in the centre seat backrest when it is folded down.

Sunglasses storage

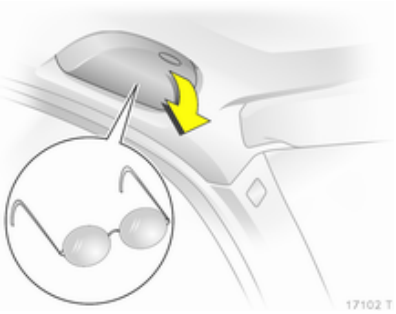

Fold down and open.

Do not use for storing heavy objects.

Underseat storage

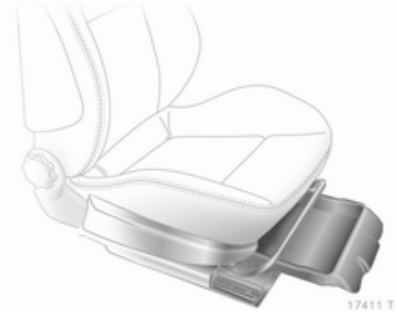

Lift at recessed edge and pull out. Maximum load: 1.5 kg. To close, push in and engage.

Roof panelling

Press marked locations to open.

The maximum permitted load of the two front compartments is 1 kg, and the maximum permitted load of the three rear compartments is 2 kg.

The compartments must be closed whilst driving.

Load compartment

Stowage in the load compartment

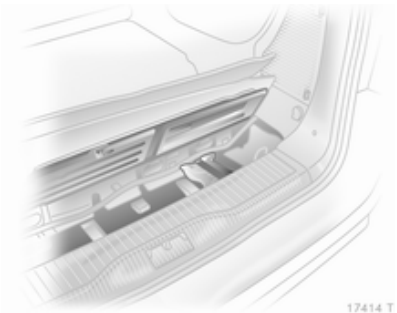

To open the cover, lift the carpeting. Raise, rotate and lift the ring. The stowage compartment contains the vehicle tools ⇨ 173 and the coupling ball bar.

The fuse box is on the left side behind the cover in the load compartment side panelling ⇨ 171.

The tyre repair kit is on the right side behind the cover ⇨ 179.

Load compartment cover

Do not place any heavy or sharp-edged objects on the load compartment cover.

Before operating the load compartment cover, the rear seat belts must be fed through the side belt holders.

Opening

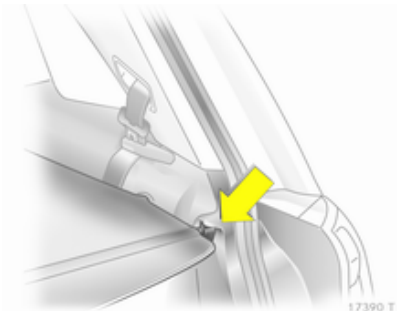

Remove load compartment cover from side brackets. It rolls up automatically.

Closing

Pull the cover towards the rear using the handle and engage it in the retainers at the sides.

Removing

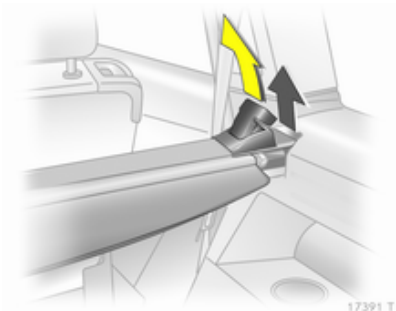

Open the load compartment cover.

Pull the release lever up and hold. Lift cover on right side and remove from retainers.

Installation

Insert the left side of the load compartment cover in the recess, pull the release lever up and hold, insert the right side of the load compartment cover and engage.

Stowing behind the third row of seats

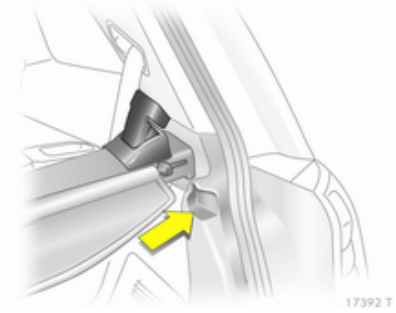

Insert the left side of the load compartment cover in the recess, pull the release lever up and hold, insert the right side of the load compartment cover and engage.

Rear floor storage cover

Use the rear floor storage cover when the third seat row is stowed.

Load rails and hooks

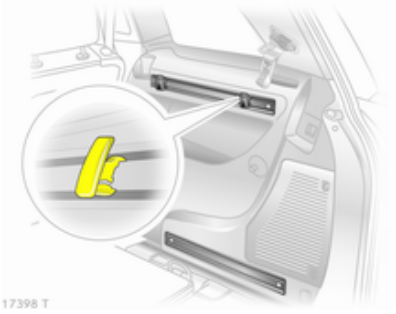

Install the hooks in the desired position in the rails: insert the hook in the upper groove on the rail and press in the lower groove.

When the rails are being used (with the exception of the partition net in front of the tailgate), the third seat row must be stowed ⇨ 52 and the seat belts unhooked from the vehicle floor. Secure released seat belt hooks to belt holder magnets ⇨ 55.

Lashing eyes

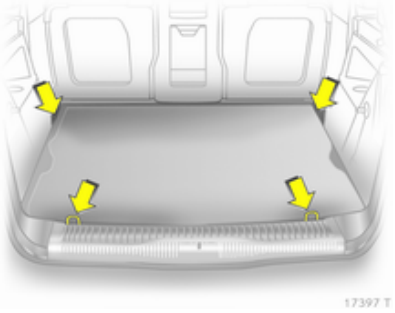

The lashing eyes are designed to secure items against slippage, e.g. using lashing straps, luggage net or safety net.

The eyes for securing the removable seat belts must not be used as lashing eyes.

The seat belts in the third seat row must never be used for securing loads.

Cargo management system

The FlexOrganizer is a flexible system for dividing the load compartment or securing loads.

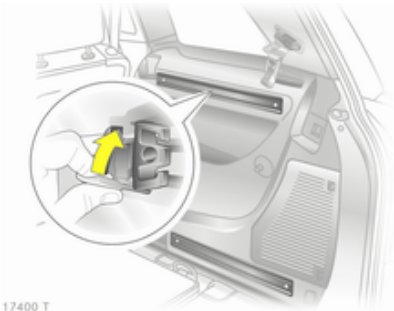

The system consists of

- adapters,
- variable partition net,
- mesh pockets,
- hooks.

The components are fitted in two rails in the side panels using adapters and hooks. The partitioning net can also be fitted directly in front of the tailgate.

Variable partition net

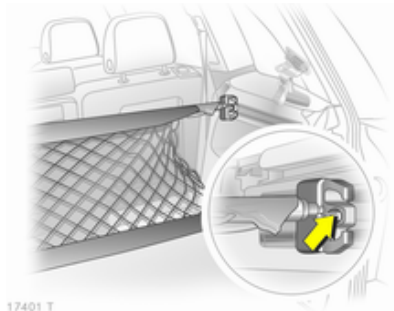

Insert an adapter into each rail: fold open the handle plate, insert adapter into upper and lower groove of rail and move to required position. Turn handle plate upwards to lock the adapter. The rods of the net must be extended before inserting into the adapters: pull out all of the end pieces and lock by rotating clockwise.

To install, push rods together a little and insert into the relevant openings in the adapters. The longer rod must be inserted into the upper adapter.

To remove, press the net rod together and remove from the adapters. Fold open the adapter handle plate, disengage from lower groove and then from upper groove.

Hooks and net pocket

Net pocket can be suspended from the luggage hooks.

Partitioning net in front of tailgate

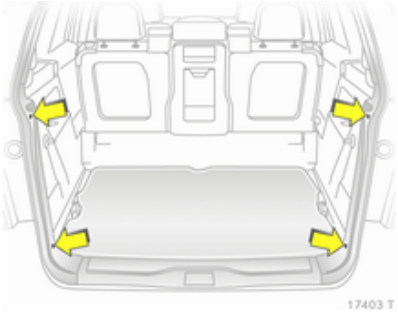

The partitioning net can be installed directly in front of the tailgate, preventing the load from falling out when the tailgate is opened.

The four end pieces of the net rod must be pushed in before installation by rotating each end piece anticlockwise and pushing in.

To install, push the net rods together a little and insert into the openings. The longer rod must be inserted at the top.

To remove, push the net rods together and remove.

For easier loading with the third seat row upright, first insert the rod, place the load in the load compartment and then insert the upper rod.

Safety net

The safety net can be installed behind the second seat row or the front seats.

Passengers must not be transported behind the safety net.

Installation

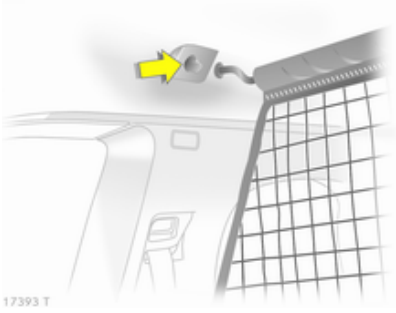

There are two installation openings in the roof frame: suspend and engage rod of net at one side, compress rod and suspend and engage at other side.

Behind the second seat row

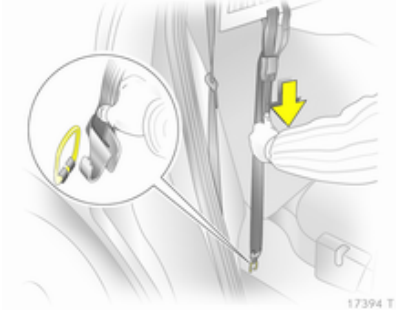

Suspend hooks of net tensioning belts in lashing eyes in floor and tension.

Behind front seats

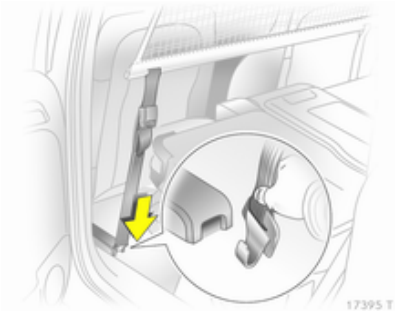

Suspend hooks of net tensioning belts in slots and tension.

Removal

Tilt length adjuster of the net tensioning belt upwards and detach the belt. Disengage the upper rod on one side, compress, disengage other side and remove from the openings.

Stowage

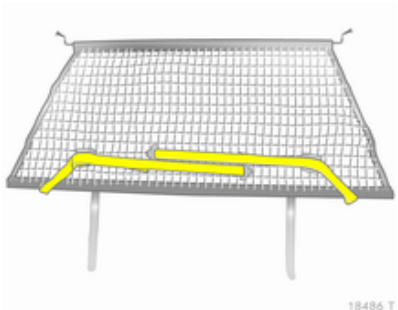

Place tensioning straps as shown in figure and align to net.

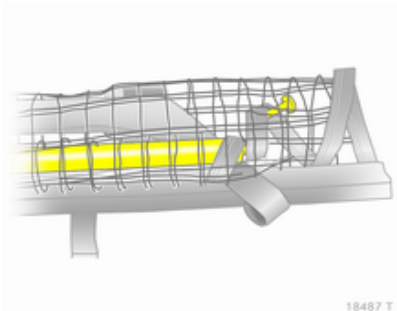

Roll the upper net rod down to approximately over the middle.

Place the upper net rod over the tensioning straps next to the lower net rod. The hooks on the upper net rod must point away from the lower net rod.

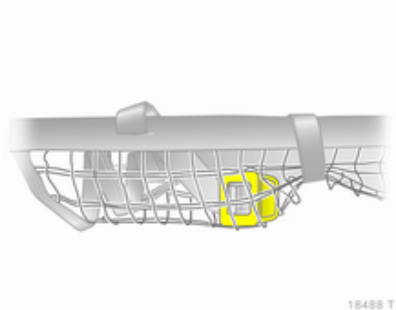

Fasten Velcro tape tightly about the net next to the length adjusters. The length adjusters and net rods must lie flat next to each other.

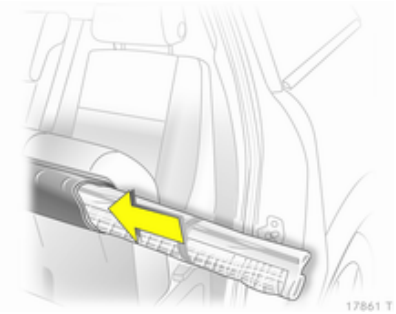

Raise the seat cushion of the second seat row ⇨ 50. Slide safety net into the retainers, fold the seat cushion down and engage.

Folding tray

Located in the front seat backrests.

Open by pulling upward until it engages.

Fold away by pressing down past the resistance point.

Do not place any heavy objects.

Warning triangle

Stow the warning triangle in the space in the tailgate and fasten with the right and left straps.

First aid kit

Stow the first aid kit in the space in the tailgate and fasten with the strap.

Roof rack system

Roof rack

For safety reasons and to avoid damage to the roof, the vehicle approved roof rack system is recommended.

Follow the installation instructions and remove the roof rack when not in use.

Version without roof railing

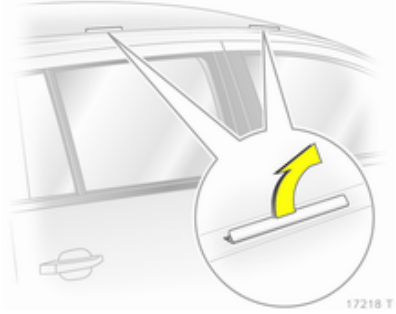

Lift the covers from the fitting openings.

Fasten the roof rack at the fastening points.

Version with roof railing

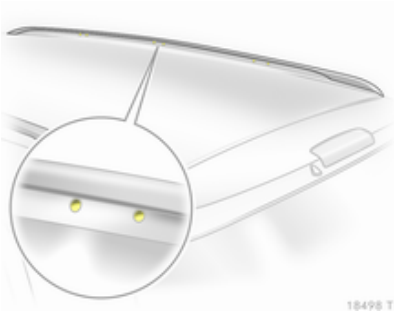

To fasten the roof rack, insert the mounting bolts in the holes indicated in the figure.

Loading information

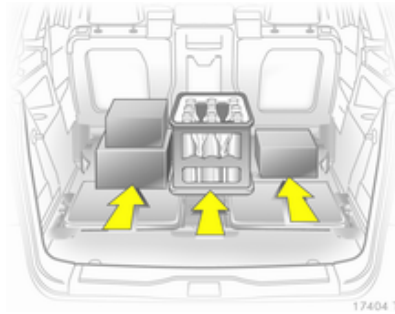

- Heavy objects in the load compartment should be placed against the seat backrests. Ensure the backrests are securely engaged. If objects can be stacked, the heavier objects should be placed at the bottom.
- Secure objects with lashing straps attached to lashing eyes ⇨ 70.
- Secure loose objects in load compartment to prevent sliding.
- When transporting objects in the load compartment, the backrests of the second row must not be angled forward.
- Do not allow the load to protrude above the upper edge of the backrests.
- Do not place any objects on the load compartment cover or the instrument panel.
- The load must not obstruct the operation of the pedals, parking brake and gear selector, or hinder the freedom of movement of the driver. Do not place any unsecured objects in the interior.
- Do not drive with an open load compartment.

⚠ Warning

Always make sure that the load in the vehicle is securely stowed. Otherwise objects can be thrown around inside the vehicle and cause personal injury or damage to the load or car.

- The payload is the difference between the permitted gross vehicle weight (see identification plate ⇨ 198) and the EC kerb weight.

  To calculate the payload, enter the data for your vehicle in the Weights table at the front of this manual.

  The EC kerb weight includes weights for the driver (68 kg), luggage (7 kg) and all fluids (tank 90 % full).

  Optional equipment and accessories increase the kerb weight.
- Driving with a roof load increases the sensitivity of the vehicle to cross-winds and has a detrimental effect on vehicle handling due to the vehicle's higher centre of gravity. Distribute the load evenly and secure it properly with retaining straps. Adjust the tyre pressure and vehicle speed according to the load conditions. Check and retighten the straps frequently.

  Do not drive faster than 120 km/h.

  The permissible roof load is 75 kg and 100 kg for vehicles with roof railing. The roof load is the combined weight of the roof rack and the load.

Instruments and controls

Controls 77
Warning lights, gauges and indicators 83
Information displays 94
Vehicle messages 101
Trip computer 104

Controls

Steering wheel adjustment

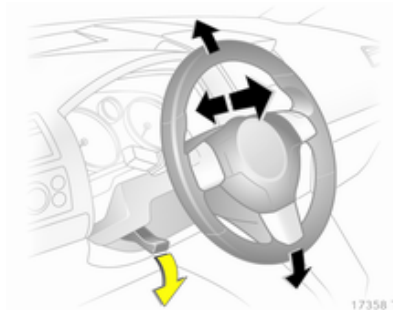

Unlock lever, adjust steering wheel, then engage lever and ensure it is fully locked.

Do not adjust steering wheel unless vehicle is stationary and steering wheel lock has been released.

Steering wheel controls

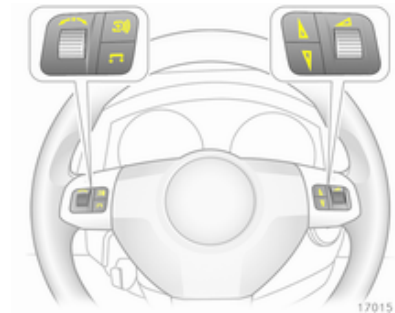

The Infotainment system and the Info-Display can be operated via the controls on the steering wheel.

Further information is available in the Infotainment system manual.

Horn

Press 📯.

Windscreen wiper/washer

Windscreen wiper

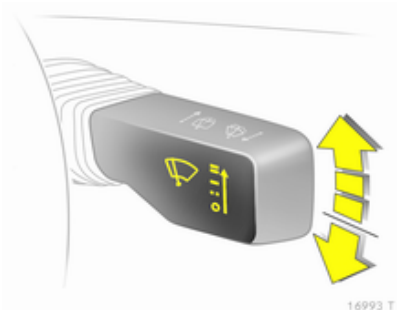

The lever always springs back to its original position.

═ = fast
— = slow
– – = interval wiping
O = Off

For a single wipe when the windscreen wiper is off, press the lever down.

Run through the windscreen wiper stages by pushing the lever past the resistance point and holding. An acoustic signal sounds at O.

Do not use if the windscreen is frozen.

Switch off in car washes.

Adjustable wiper interval

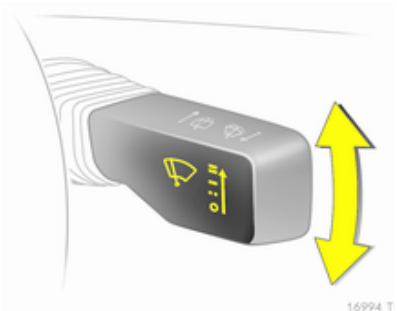

To set the wiper interval to a value between 2 and 15 seconds: Switch on ignition, move lever down from position O, wait desired time interval and raise lever to – –.

After turning on the ignition and setting the lever to – –, the interval is set to 6 seconds.

Automatic wiping with rain sensor

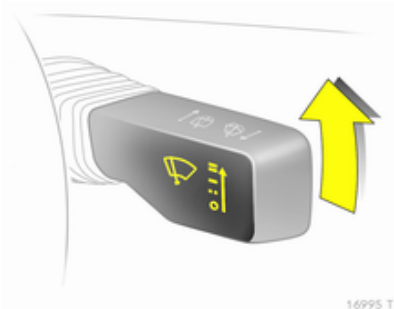

– – = Automatic wiping with rain sensor

The rain sensor detects the amount of water on the windscreen and automatically regulates the frequency of the windscreen wipers.

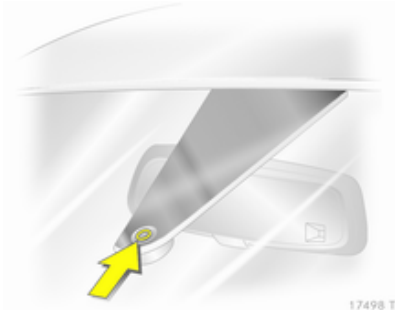

Keep the sensor free from dust, dirt and ice.

Windscreen washer

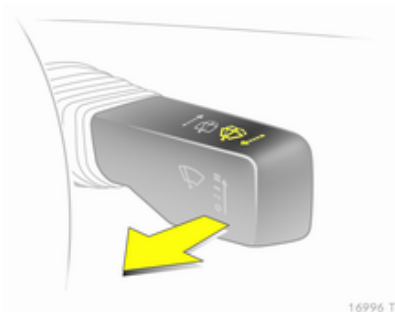

Pull lever. Washer fluid is sprayed on the windscreen and the wiper wipes for a few strokes.

If the lights are on, washer fluid is also sprayed on the headlights. The headlight washer system is inoperative for 2 minutes.

Rear window wiper/washer

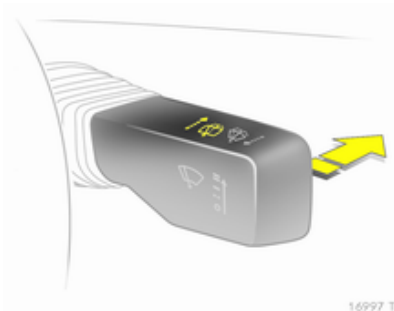

Push lever forwards. The rear window wiper wipes in interval mode. Switch off by pushing lever forwards again.

If the lever is held forwards, washer fluid is sprayed on the rear window.

Do not use if the rear window is frozen.

Switch off in car washes.

The rear screen wiper comes on automatically when the windscreen wiper is switched on and reverse gear is engaged.

Outside temperature

A drop in temperature is indicated immediately and a rise in temperature after a time delay.

If outside temperatures drop to 3 °C, the symbol ❄ illuminates in the Triple-Info-Display or the Board-Info-Display as a warning for icy road conditions. ❄ remains illuminated until temperatures reach at least 5 °C.

In vehicles with Graphic-Info-Display or Color-Info-Display, a warning message appears in the display as a warning for icy road conditions. There is no message below -5 °C.

⚠ Warning

The road surface may already be icy even though the display indicates a few degrees above 0 °C.

Clock

Date and time are shown in the Info-Display.

Board-Info-Display ⇨ 95, Graphic-Info-Display, Color-Info-Display ⇨ 97.

Set date and time in Triple-Info-Display

The Infotainment system must be off. Activate setting mode by holding the ◴ button depressed for about 2 seconds. The flashing value is adjusted using the ⊙ button. The ◴ button is used to switch to the next mode and to exit setting mode.

Automatic time synchronisation

The RDS signal of most VHF transmitters automatically sets the time, identified by ◴ in the display.

Some transmitters do not send a correct time signal. In such cases, we recommend to switch off automatic time synchronisation.

Activate setting mode and set it to year setting. Hold the ◴ button depressed about 3 seconds until ◴ flashes in the display and “RDS TIME" appears. The function is activated (RDS TIME 1) or deactivated (RDS TIME 0) with the ⊙ button. Exit setting mode using the ◴ button.

Power outlets

Power outlets are located in the centre console and in the luggage compartment.

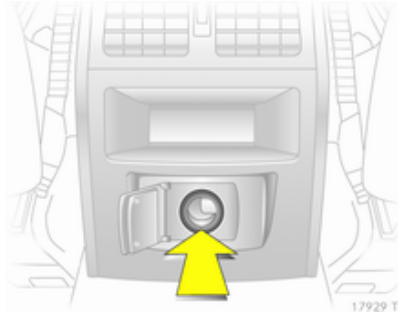

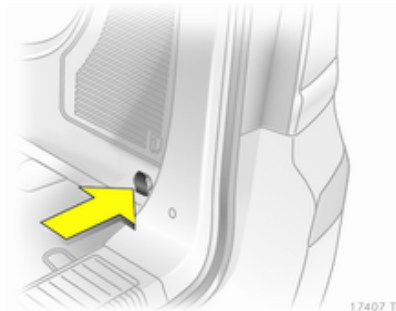

Do not damage the power outlets by using unsuitable plugs. Connecting electrical accessories while the engine is off will discharge the battery. Do not exceed the maximum

power consumption of 120 Watts. Do not connect any current-delivering accessories, e.g. electrical charging devices or batteries.

Electrical accessories that are connected must comply with the electromagnetic compatibility requirements laid down in DIN VDE 40 839.

Cigarette lighter

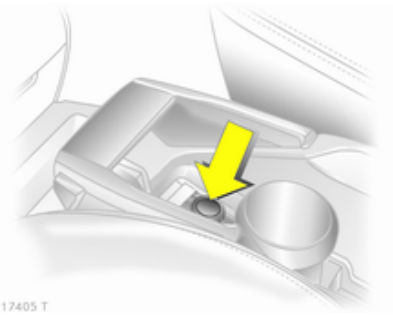

The cigarette lighter is located in the centre console.

Press in cigarette lighter. It switches off automatically once the element is glowing. Pull out lighter.

Ashtrays

Caution
To be used only for ash and not for combustible rubbish.

Ashtray, front

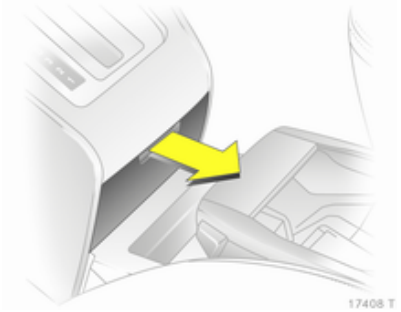

Open ashtray at recess.

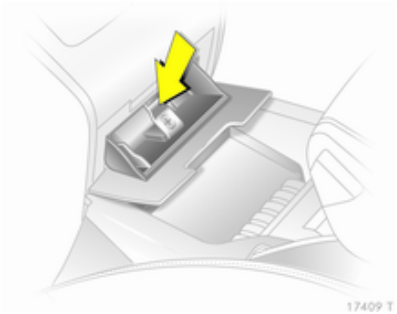

To empty the ashtray, press the spring, open ashtray all the way and remove.

Portable ashtray

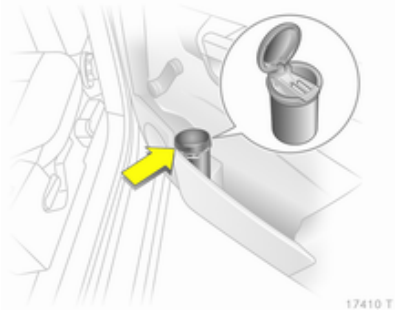

The portable ashtray can be placed in the cupholders.

Warning lights, gauges and indicators

Instrument cluster

In some versions, the needles of the instruments briefly rotate to the end position when the ignition is switched on.

Speedometer

Indicates vehicle speed.

Odometer

The bottom line displays the recorded distance.

Trip odometer

The top line displays the counted kilometres since the last reset.

To reset, hold the reset knob depressed for a few seconds with the ignition on.

Tachometer

Displays the engine speed.

Drive in a low engine speed range for each gear as much as possible.

Caution
If the needle is in the red warning zone, the maximum permitted engine speed is exceeded. Engine at risk.

Fuel gauge

Displays the fuel level or gas pressure in the tank depending on the operation mode.

Control indicator ⛽ illuminates if the level in the tank is low. Refuel immediately if it flashes.

During natural gas operation, the switch automatically switches over to petrol operation ⇨ 85.

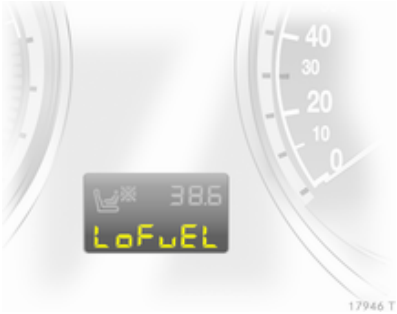

When operating with natural gas, the message **LoFuEL** is displayed if the level in the petrol tank is low. Acknowledge the message by pressing the reset button ⇨ 83.

Never run the tank dry.

Because of the fuel remaining in the tank, the top-up quantity may be less than the specified tank capacity.

Fuel selector

Pressing button ⛽ switches between petrol and natural gas operation. Switching is not possible at high loads (e.g. strong acceleration, running at full throttle). The LED status shows the current operating mode.

Natural gas operation	=	LED off.
Petrol operation	=	LED illuminates.

As soon as the natural gas tanks are empty, petrol operation is automatically engaged until the ignition is switched off.

If the natural gas tanks are not refuelled, the system must be manually switched to petrol operation before the engine is started up again. This will prevent damage to the catalytic converter (overheating caused by irregular fuel supply).

If the selector switch is operated several times within a short time a switchover block is activated. The engine remains in the current operating mode. The block remains active until the ignition is switched off.

A slight loss of power and torque can be expected in petrol operation. You must therefore adapt your driving style (e.g. during overtaking manoeuvres) and vehicle loads (e.g. towing loads) accordingly.

Every six months run the petrol tank down until control indicator ⛽ illuminates and refuel. This is necessary to maintain fuel quality as well as system function necessary for petrol operation.

Fill the tank completely at regular intervals to prevent corrosion in the tank.

Service display

The message **InSP** appears when it is time for servicing. Further information ⇨ 193.

Control indicators

The control indicators described are not present in all vehicles. The description applies to all instrument versions. When the ignition is switched on, most control indicators will illuminate briefly as a functionality test.

The control indicator colours mean:

Red	=	Danger, important reminder,
Yellow	=	Warning, information, fault,
Green	=	Confirmation of activation,
Blue	=	Confirmation of activation.

0
10
20
30
40
50
60
70
80
IDS+
P
E
1/2
1/1
0
10
20
30
40
50
60
80
100
120
140
160
180
200
220
240
260
ABS
18611 T

Turn signal

⇦⇨ illuminates or flashes green.

Illuminates

The control indicator illuminates briefly when the parking lights are switched on. Parking lights ⇨ 113.

Flashes

The control indicator flashes if a turn signal or the hazard warning flashers are activated.

Rapid flashing: failure of a direction indicator lamp or associated fuse, failure of direction indicator lamp on trailer.

Bulb replacement ⇨ 160. Fuses ⇨ 167.

Turn signals ⇨ 112.

Seat belt reminder

illuminates or flashes red.

Illuminates

After the ignition is switched on until the seat belt is fastened.

Flashes

After starting off until the seat belt is fastened.

Fastening the seat belt ⇨ 55.

Airbag and belt tensioners

illuminates red.

When the ignition is switched on, the control indicator illuminates for approx. 4 seconds. If it does not illuminate, does not go out after 4 seconds or illuminates whilst driving, there is a fault in the belt tensioner, the airbags or the seat occupancy recognition system. The systems may fail to trigger in the event of an accident.

Deployment of the belt tensioners or airbags is indicated by continuous illumination of .

⚠ Warning

Have the cause of the fault remedied immediately by a workshop.

Airbag system, belt tensioners ⇨ 58, ⇨ 54.

Seat occupancy recognition

illuminates or flashes yellow.

Illuminated

If the vehicle is equipped with seat occupancy recognition, illuminates for approx. 4 seconds after the ignition is switched on.

If a child restraint system with transponders is detected, remains illuminated. Only then a child restraint system with transponders may be used on the front passenger seat as the front passenger airbag systems are deactivated ⇨ 61.

⚠ Danger

If a child restraint system is fitted and the control indicator is not illuminated while driving, the front

and side airbag for the front passenger seat are not deactivated.

Flashes

Fault in system or child restraint system with transponders defective or improperly fitted ⇨ 61.

⚠ Danger

Flashing of the control indicator while driving indicates a fault. Have the cause of the fault remedied by a workshop immediately.

Child restraint system with transponders ⇨ 65.

Charging system

illuminates red.

Illuminates when the ignition is switched on and goes out shortly after the engine starts.

Illuminates when the engine is running

Stop, switch off engine. Battery is not charging. Engine cooling may be interrupted. In diesel engines, power to the brake servo unit may be cut. Seek the assistance of a workshop.

Malfunction indicator light

illuminates or flashes yellow.

Illuminates when the ignition is switched on and goes out shortly after the engine starts.

Illuminates when the engine is running

Fault in the emission control system. The permitted emission limits may be exceeded. Immediately seek the assistance of a workshop.

Flashes when the engine is running

Fault that could lead to catalytic converter damage. Ease up on the accelerator until the flashing stops. Seek the assistance of a workshop immediately.

Service vehicle soon

illuminates or flashes yellow.

Illuminates when the engine is running

Fault in engine or transmission electronics ⇨ 133, ⇨ 137. The electronics switch to an emergency running programme. Fuel consumption may be increased and the vehicle handling may be impaired.

If the fault persists after restarting the vehicle, consult a workshop.

Illuminates together with InSP4 in the service display

Seek the assistance of a workshop for draining the diesel fuel filter ⇨ 102.

Flashes with switched on ignition

Fault in the immobiliser system. The engine cannot be started ⇨ 38.

Switch off the ignition and repeat the start attempt.

If the control indicator continues flashing, attempt to start the engine using the spare key and seek the assistance of a workshop.

Brake and clutch system

(!) illuminates or flashes red.

Illuminated

Illuminates when the parking brake is released if the brake and clutch fluid level is too low ⇨ 157.

⚠Warning
Stop. Do not continue your journey. Consult a workshop.

Illuminates after the ignition is switched on if the parking brake is applied ⇨ 140.

Flashes

On vehicle with automated manual transmission, flashes for a few seconds when the ignition is switched off if the parking brake is not applied.

On vehicles with automated manual transmission, flashes when the driver's door is opened if no gear is engaged and the parking brake is not applied.

Antilock brake system (ABS)

(ABS) illuminates red.

Illuminates for a few seconds after the ignition is turned on. The system is ready for operation when the control indicator goes out.

If the control indicator does not go out after a few seconds, or if it illuminates while driving, there is a fault in the ABS. The brake system remains operational but without ABS regulation.

Antilock Brake System ⇨ 139.

Sport mode

illuminates yellow.

The symbol is illuminated when Sport mode is on ⇨ 132, ⇨ 136.

Winter mode

illuminates yellow.

The symbol is illuminated when Winter mode is on ⇨ 132, ⇨ 136.

Ultrasonic parking assist

P illuminates or flashes yellow.

Illuminates

Fault in system. Have the cause of the fault remedied by a workshop.

Flashes

Fault due to sensors that are dirty or covered by ice or snow.

or

Interference due to external sources of ultrasound. Once the source of interference is removed, the system will operate normally.

Ultrasonic parking sensors ⇨ 143.

Electronic Stability Program

flashes or illuminates yellow.

Illuminates for a few seconds when the ignition is switched on.

Flashes whilst driving

The system is actively engaged. Engine output may be reduced and the vehicle may be braked automatically to a small degree ⇨ 140.

Illuminates whilst driving

The system is switched off or a fault is present. Continued driving is possible. Driving stability, however, may deteriorate depending on road surface conditions.

Have the cause of the fault remedied by a workshop.

ESP®Plus ⇨ 140.

Engine coolant temperature

illuminates red.

Illuminates when the engine is running

Stop, switch off engine.

Caution
Coolant temperature too high.

Check coolant level immediately ⇨ 156.

If there is sufficient coolant, consult a workshop.

Preheating and diesel particle filter

illuminates or flashes yellow.

Illuminates

Preheating activated. Only activates when outside temperature is low.

Flashes

Control indicator flashes if the diesel particle filter requires cleaning and previous driving conditions did not permit automatic cleaning. Continue driving and if possible do not allow engine speed to drop below 2000 rpm.

The control indicator goes off as soon as the self-cleaning operation is complete.

Diesel particle filter ⇨ 128.

Deflation detection system and tyre pressure monitoring system

illuminates or flashes red or yellow.

Control indicator illuminates red

Tyre pressure loss. Stop immediately and check tyre pressure. A maximum speed of 80 km/h is permitted for run-flat tyres ⇨ 174.

Control indicator illuminates yellow

Fault in system or tyre without pressure sensor mounted (e.g. spare wheel). Consult a workshop.

Flashes

Flashes three times to indicate system initialisation.

Deflation detection system ⇨ 177, tyre pressure monitoring system ⇨ 176.

Interactive driving system, continuous damping control, sport mode

IDS+ illuminates yellow.

Illuminates for approximately 10 seconds after the driver's door is opened. Illumination whilst driving indicates a fault in the system. The system switches to the harder chassis setting for reasons of safety. Have the cause of the fault remedied by a workshop.

IDS^Plus ⇨ 141, Continuous damping control ⇨ 142, Sport mode ⇨ 141.

Engine oil pressure

illuminates red.

Illuminates when the ignition is switched on and goes out shortly after the engine starts.

Illuminates when the engine is running

Caution
Engine lubrication may be interrupted. This may result in damage to the engine and/or locking of the drive wheels.

1. Depress clutch.
2. Select neutral gear, set selector lever to **N**.
3. Move out of the flow of traffic as quickly as possible without impeding other vehicles.
4. Switch off ignition.

⚠ Warning
When the engine is off, considerably more force is needed to brake and steer. Do not remove key until vehicle is stationary, otherwise the steering wheel lock could engage unexpectedly.

Check oil level before seeking the assistance of a workshop ⇨ 155.

Low engine oil level

illuminates yellow.

Engine oil level is checked automatically.

Illuminates when the engine is running

Low engine oil level. Check engine oil level and top up as necessary ⇨ 155.

Low fuel

illuminates or flashes yellow.

Illuminates
Level in fuel tank too low.

Flashes
Fuel used up. Refuel immediately. Never run the tank dry.

Catalytic converter ⇨ 129.

Bleeding the diesel fuel system ⇨ 159.

When operating with natural gas, the system automatically switches over to petrol operation ⇨ 85.

Open&Start system
illuminates or flashes yellow.

Flashes
The electronic key is no more within the reception range of the vehicle interior. The engine cannot be started. Hold the **Start/Stop** button depressed a bit longer to switch off the ignition.

or

Failure of the electronic key. Operation is yet only possible via emergency operation.

Illuminates
Fault in system. Try to operate with the spare key, the remote control or through emergency operation. Hold the **Start/Stop** button depressed a bit longer to switch off the ignition. Seek the assistance of a workshop.

or

The steering wheel lock is still engaged. Move the steering wheel slightly and press the **Start/Stop** button.

Open&Start system ⇨ 29.

Apply footbrake
illuminates yellow.

The engine with manual transmission automated can only be started if the foot brake is depressed. If the foot brake is not depressed, the control indicator illuminates ⇨ 135.

Exterior light
illuminates green.

Illuminates when the exterior lights are on ⇨ 109.

High beam
illuminates blue.

Illuminates when high beam is on and during headlamp flash ⇨ 110.

Adaptive forward lighting
illuminates or flashes yellow.

Illuminates
Fault in system.

If the swivelling device for curve lighting fails, the corresponding low beam lamp is deactivated and the fog lamp is switched on.

Seek the assistance of a workshop.

Flashes
System switched to symmetrical low beam.

Control indicator flashes for approx. 4 seconds after the ignition is switched on as a reminder that the system has been switched ⇨ 110.

Adaptive Forward Lighting (AFL) ⇨ 111.

Fog light

illuminates green.

Illuminates when the front fog lights are on ⇨ 112.

Rear fog light

illuminates yellow.

Illuminates when the rear fog light is on ⇨ 113.

Cruise control

illuminates green.

Illuminates when the system is on ⇨ 142.

Door open

illuminates red.

Illuminates when a door or the tailgate is open.

Information displays

Triple-Info-Display

Displays time, outside temperature and date or Infotainment system when it is on.

When the ignition is off, time, date and outside temperature can be displayed by briefly pressing one of the two buttons below the display.

Board-Info-Display

Displays time, outside temperature and date or Infotainment system information.

Selecting functions

Functions and settings of the Infotainment system can be accessed via the board information display.

This is done using the menus and buttons of the Infotainment system.

If nothing is operated within 5 seconds, the menus are automatically exited.

Select using the Infotainment system buttons

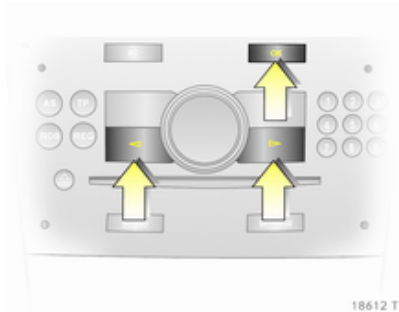

In the **Settings** menu, use the OK button to call up the required function. Use the arrow buttons to change settings.

In the **BC** menu, use the OK button to call up the required function. Use the OK button to operate the stop watch or restart measurement and calculation.

Select using the left adjuster wheel on the steering wheel:

Press the adjuster wheel to open the **BC** menu. In the **BC** menu press to operate the stop watch or restart measurement and calculation.

Turn the adjuster wheel to call up the required function.

System settings

Press the **Settings** button of the Infotainment system. Menu item **Audio** then opens.

Call up **System** with the left arrow button and select with the OK button.

Automatic time synchronisation

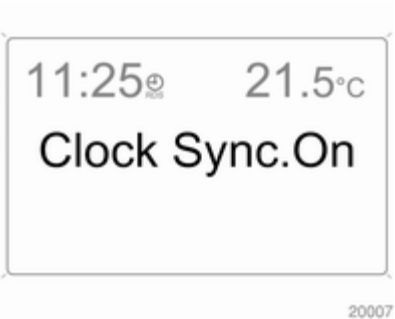

The RDS signal of most VHF transmitters automatically sets the time. This can be identified by in the display.

Some transmitters do not send a correct time signal. In such cases, we recommend to switch off automatic time synchronisation.

Deactivate (**Clock Sync.Off**) or activate (**Clock Sync.On**) automatic time synchronisation with the arrow buttons.

Setting date and time

The value ready for modification is marked with arrows. Use the arrow buttons to make the required setting.

Ignition logic

See Infotainment system manual.

Language selection

The display language for some functions can be selected.

Select the required language with the arrow buttons.

Setting units of measure

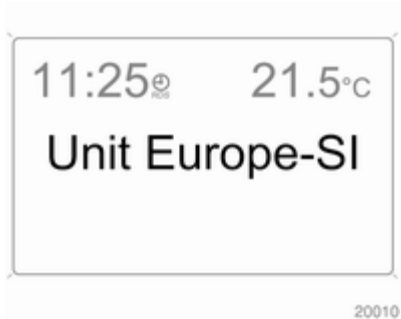

Select the required unit of measurement with the arrow buttons.

Graphic-Info-Display, Colour-Info-Display

Displays time, outside temperature, date or Infotainment system (when it is on) and electronic climate control system.

The Color-Info-Display displays the information in colour.

The type of information and how it is displayed depend on the equipment of the vehicle and the settings made.

Selecting functions

Functions and settings of the Infotainment system and electronic climate control system are accessed via the display.

Selections are made via the menus and buttons, the multifunction control of the Infotainment system or the left adjuster wheel of the steering wheel.

Selecting with the Infotainment system buttons

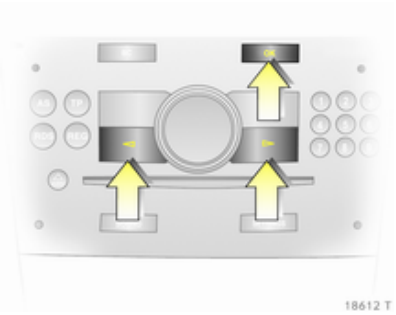

Select menu items via the menus and using the Infotainment system buttons. The OK button is used to select the highlighted item or confirm a command.

To exit a menu, press the right or left arrow button until **Return** or **Main** appear and select.

Selecting with the multifunction control

Turn the multifunction control to highlight menu items or commands and to select function areas.

Press the multifunction control to select the highlighted item or confirm a command.

To exit a menu, turn the multifunction control until **Return** or **Main** appear and select.

Selecting with the left adjuster wheel on the steering wheel

Turn to select a menu item.

Press the adjuster wheel to select the highlighted item or confirm a command.

Function areas

For each function area there is a main page (Main), which is selected at the top edge of the display (not with Infotainment system CD 30 or the Mobile Phone Portal):

- Audio,
- Navigation,
- Telephone,
- Trip computer.

System settings

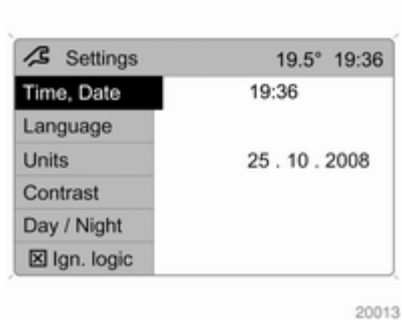

Press the **Main** button of the Infotainment system.

Press the **Settings** button on the Infotainment system. For Infotainment system CD 30, no menu may be selected.

Setting date and time

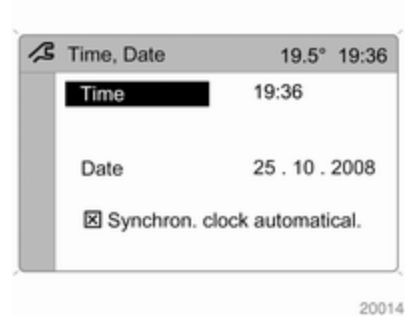

Select menu item **Time, Date** from the **Settings** menu.

Select the required menu items and make settings.

Changing the time setting will also change the time setting of the navigation system.

Automatic time synchronisation
The RDS signal of most VHF transmitters automatically sets the time.

Some transmitters do not send a correct time signal. In such cases, we recommend to switch off automatic time synchronisation.

The function is activated by ticking the field in front of **Synchron. clock automatical.** in the **Time, Date** menu.

Language selection

The display language for some functions can be selected.

Select menu item **Language** from the **Settings** menu.

Select the desired language.

Selection is indicated by a ▶ in front of the menu item.

In systems with voice output, when the language setting of the display is changed the system will ask whether the announcement language should also be changed - see Infotainment system manual.

Setting units of measure

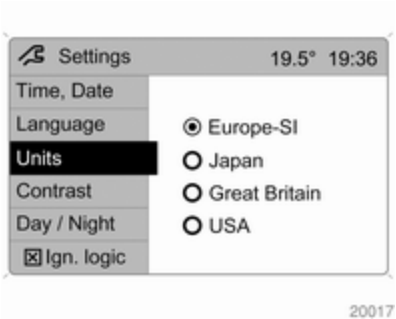

Select menu item **Units** from the **Settings** menu.

Select the desired unit.

Selections are indicated by a ● in front of the menu item.

Adjusting contrast (Graphic-Info-Display)

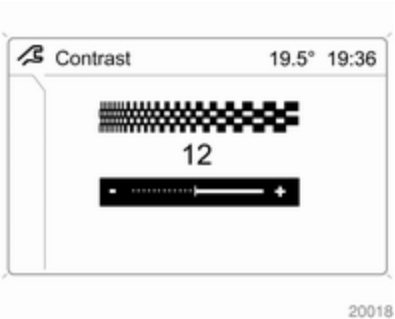

Select menu item **Contrast** from the **Settings** menu.

Confirm the required setting.

Setting display mode

Display brightness is dependent of vehicle lighting. Additional settings can be made as follows:

Select menu item **Day / Night** from the **Settings** menu.

Automatic The colours are adapted to the exterior lights.

Always day design black or coloured text on light background.

Always night design white or coloured text on dark background.

Selection is indicated by a ● in front of the menu item.

Ignition logic

See Infotainment system manual.

Vehicle messages

Messages are given via the instrument panel display or as warning and signal buzzers. Check control messages appear on the Info-Display. Some appear in an abbreviated form. Confirm warning messages with the multifunction knob⇨ 95, ⇨ 97.

Warning chimes

When starting the engine or whilst driving

- If the electronic key is not present or is not recognised.
- If seat belt is not fastened.
- If a door or the tailgate is not fully closed when starting off.
- If a certain speed is exceeded with the parking brake applied.

- If the speed programmed at the factory is exceeded.
- If the vehicle has automated manual transmission and the driver's door is opened when the engine is running, a gear is engaged and the foot brake is not depressed.

When the vehicle is parked and the driver's door is opened

- When the key is in the ignition switch.
- With exterior lights on.
- With Open&Start system and automatic transmission, if the selector lever is not in **P**.
- For automated manual transmission, if the parking brake is not applied and no gear is engaged when the engine is switched off.

Battery voltage

Low battery voltage in radio remote control or electronic key. On vehicles without check control, the message **InSP3** appears in the instrument panel display. Replace the battery ⇨ 28, ⇨ 29.

Brake light switch

Brake light does not come on during braking. Have the cause of the fault remedied immediately by a workshop.

Engine cooling level

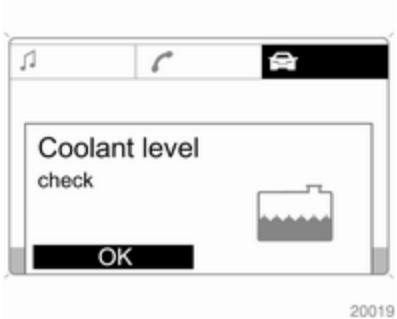

Low fluid level in engine cooling system. Check coolant immediately ⇨ 156.

Drain diesel fuel filter

If there is water in the diesel fuel filter, the message **InSP4** appears in the instrument panel. Consult a workshop.

Lighting

Important exterior lights, including cables and fuses, are monitored. In trailer mode, trailer lighting is also monitored. Trailers with LED lighting must have an adapter that enables light monitoring as with conventional bulbs.

The failed lighting will be indicated in the information display or the message **InSP2** will appear in the instrument panel display.

Anti-theft alarm system

System fault in anti-theft alarm system. Have the cause of the fault remedied by a workshop.

Tyre pressure

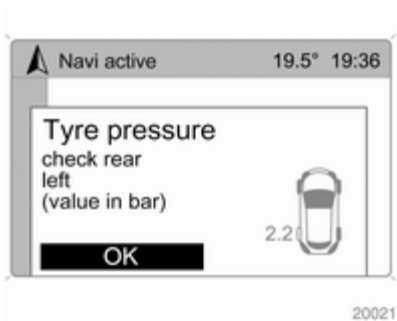

On vehicles with tyre pressure monitoring system, if there is low tyre pressure, information which tyre to check appears on the display.

Reduce speed and check tyre pressure at the next opportunity. Tyre pressure monitoring system ⇨ 176. Check tyre pressure ⇨ 175, ⇨ 211.

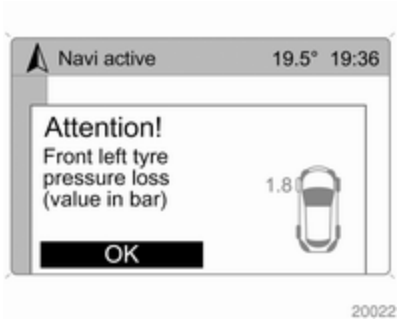

If there is a considerable loss of pressure, a corresponding message appears indicating the tyre.

Steer out of flow of traffic as quickly as possible without endangering other vehicles. Stop and check the tyres. Mount the spare wheel ⇨ 182. If run-flat tyres are fitted, maximum speed is 80 km/h. Information ⇨ 174. Tyre pressure monitoring system ⇨ 176.

Washer fluid level

Low washer fluid level. Top up washer fluid ⇨ 157.

Trip computer

Trip computer in Board-Info-Display

Access the data by pressing the **BC** button on the Infotainment system or the left adjuster wheel on the steering wheel.

Some information appears in the display in an abbreviated form.

Once an audio function has been selected, the lower row of the trip computer function is displayed furthermore.

Instantaneous consumption

Displays the instantaneous consumption. At low speeds, consumption per hour is displayed.

Average consumption

Displays average consumption. The measurement can be reset at any time.

Absolute consumption

Displays fuel consumed. The measurement can be reset at any time.

Average speed

Displays average speed. The measurement can be reset at any time.

Stoppages in the journey with the ignition off are not included in the calculations.

Distance

Displays distance travelled. The measurement can be reset at any time.

Range

Range is calculated from current fuel tank content and current consumption. The display shows average values.

After refuelling, the range updates automatically after a brief delay.

When the fuel level in the tank is low, the message **Range** appears in the display.

When the fuel tank is nearly empty, the message **Refuel!** appears in the display.

Stop watch

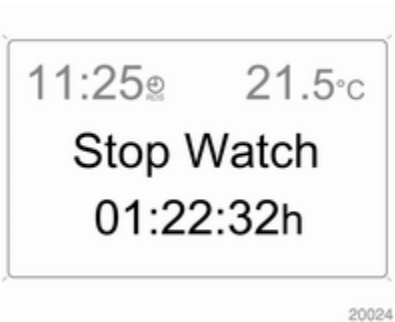

Select the function. Press the **OK** button or the left adjuster wheel on the steering wheel to start or stop the stop watch.

Restart trip computer

The measurement or calculation of the following trip computer information can be restarted:

- Average consumption,
- Absolute consumption,
- Average speed,
- Distance,
- Stop watch.

Select the desired trip computer information ⇨ 95. To restart, press the **OK** button or the left adjuster wheel on the steering wheel for approx. 2 seconds.

Trip computer in Graphic-Info-Display or Colour-Info-Display

The main page of the trip computer provides information on range, current consumption and average consumption of **BC 1**.

To display other trip computer data, press the **BC** button on the infotainment system, select the trip computer menu from the display or press the left adjuster wheel on the steering wheel.

Select **BC 1** or **BC 2** from the trip computer menu.

Range

20025

Range is calculated from current fuel tank content and current consumption. The display shows average values.

After refuelling, the range is updated automatically after a brief delay.

20026

When the fuel level in the tank is low, the message **Range** appears in the display.

When the fuel tank is nearly empty, the message **Please refuel!** appears in the display.

The navigation system will support you in finding the nearest gas station. See Infotainment manual for further information.

Instantaneous consumption

Display of the instantaneous consumption. At low speeds, consumption per hour is displayed.

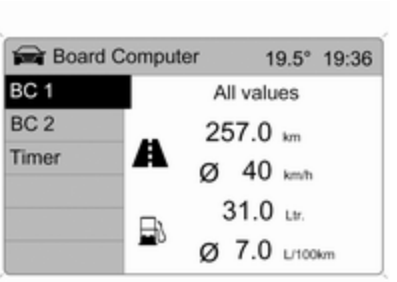

20027

Distance

Displays distance travelled. The measurement can be reset at any time.

Average speed

Displays average speed. The measurement can be reset at any time.

Stoppages in the journey with the ignition off are not included in the calculations.

Absolute consumption

Displays fuel consumed. The measurement can be reset at any time.

Average consumption

Displays average consumption. The measurement can be reset at any time.

Restart trip computer

The measurement or calculation of the following trip computer information can be restarted:

- Distance,
- Average speed,
- Absolute consumption,
- Average consumption.

Select **BC 1** or **BC 2** from the **Board Computer** menu.

The information of the two trip computers can be reset separately, making it possible to evaluate data from different time periods.

Select the required trip computer information and confirm.

To reset all information of a trip computer, select menu item **All values**.

Stop watch

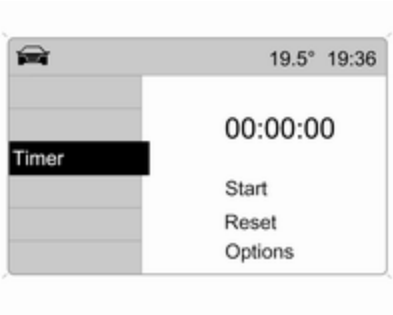

Select menu item **Timer** from the **Board Computer** menu.

To start, select menu item **Start**. To stop, select menu item **Stop**.

To reset, select menu item **Reset**.

The relevant stop watch display can be selected in the **Options** menu:

Driving Time excl. Stops

The time the vehicle is in motion is recorded. Stationary time is not included.

Driving Time incl. Stops

The time the vehicle is in motion is recorded. The time the vehicle is stationary with the ignition switched on is included.

Travel Time

Measurement of the time from manual activation via **Start** to manual deactivation via **Reset**.

Tyre pressures

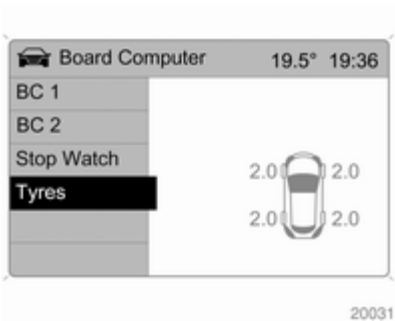

Select menu **Tyres** from the **Board Computer** menu.

The current pressure of each tyre is displayed.

Further information ⇨ 176.

Lighting

Exterior lighting 109
Interior lighting 114
Lighting features 115

Exterior lighting

Light switch

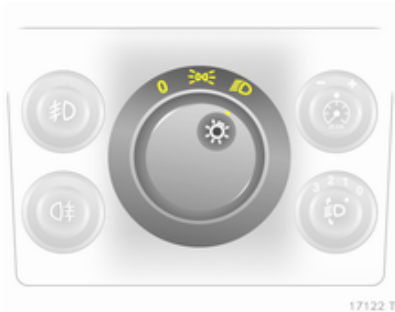

Turn light switch:

0 = Off
⇶ = sidelights
≣D = low beam

Control indicator ⇶ ⇨ 93.

If the ignition is switched off with the low beam on, only the sidelights remain illuminated.

Automatic light control

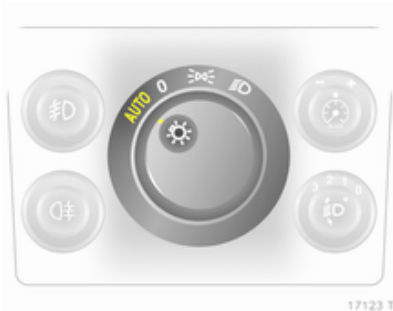

Light switch set to **AUTO**: When the engine is running, the exterior lighting is switched on when external lighting conditions are poor.

For reasons of safety, the light switch should always remain in the **AUTO** position.

Move light switch to ≣D if visibility is poor because of fog or mist.

High beam

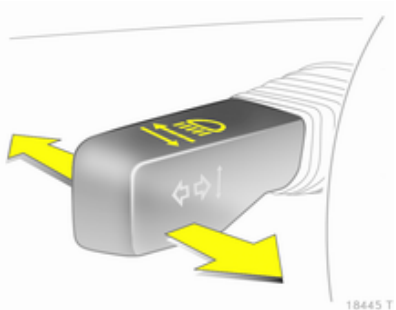

To switch from low to high beam, push lever.

To switch to low beam, push lever again or pull.

Headlight flash

To activate the headlight flash, pull lever.

Headlight range adjustment

Manual headlight range adjustment

To adapt headlight range to the vehicle load to prevent dazzling: Press knob to disengage and turn to required position.

Vehicles without automatic level control system

0 = front seats occupied
1 = all seats occupied
2 = all seats occupied and luggage compartment laden
3 = driver's seat occupied and luggage compartment laden

Vehicles with automatic level control system

0 = front seats occupied
1 = all seats occupied
1 = all seats occupied and luggage compartment laden
2 = driver's seat occupied and luggage compartment laden

Automatic headlight range adjustment

Headlight range is automatically adjusted based on vehicle load.

Headlights when driving abroad

The asymmetrical headlight beam extends visibility at the edge of the road at the passenger side.

However, when driving in countries where traffic drives on the opposite side of the road, adjust the headlights to prevent dazzling of oncoming traffic.

Vehicles with halogen headlight system

Have the headlights adjusted by a workshop.

Vehicles with adaptive forward lighting

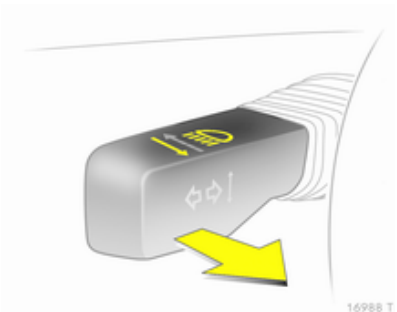

Adapting the aim of the headlight beam:

1. Pull lever and hold.
2. Switch on ignition.
3. An acoustic signal sounds after approx. 3 seconds.

Control indicator ⇨ 93.

Daytime running lights

With the ignition on and the light switch set to **0** or **AUTO**, the sidelights are switched on. When the engine is running, headlights illuminate.

On vehicle without automatic light control, **D** must be switched on when it gets dark for illumination of the instrument panel.

The daytime running lights switch off when the ignition is switched off.

Adaptive forward lighting

Adaptive forward lighting with Bi-Xenon headlights improves lighting in curves and increases headlight range.

Curve lighting

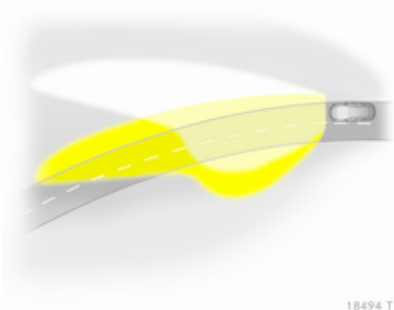

The light beam pivots based on steering wheel position and speed.

Motorway lighting

At higher speeds and continuous straight ahead travel, the beam automatically raises slightly, thereby increasing headlight range.

Control indicator ⇨ 93.

Hazard warning flashers

Operated with the ⚠ button.

The hazard warning flashers activate automatically if the airbags deploy.

Turn and lane-change signals

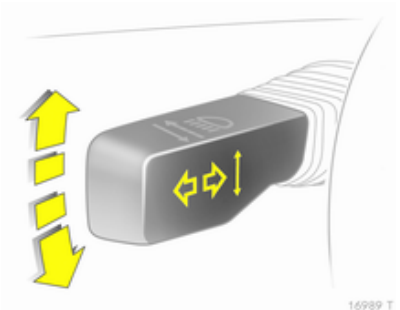

Lever up = right turn signal
Lever down = left turn signal

The lever always springs back to its original position.

If the lever is moved past the resistance point, the turn signal is switched on constantly. When the steering wheel moves back, the turn signal is automatically deactivated.

For three flashes, e.g. when changing lanes, press the lever until resistance is felt and then release.

Move the lever to the resistance point and hold for longer indication.

Switch the turn signal off manually by moving the lever slightly.

Front fog lights

The front fog lights can only be switched on when both the ignition and headlights or sidelights are on.

Operated with the button.

Rear fog lights

The rear fog light can only be switched on when both the ignition and headlights or sidelights (with front fog lights) are on.

Operated with the button.

The vehicle rear fog light is deactivated when towing.

Parking lights

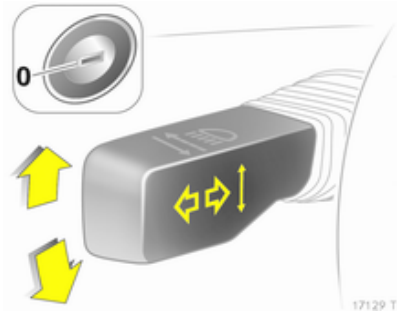

When parked, the parking light on one side can be activated:

1. Set light switch to **0** or **AUTO**.
2. Ignition off.
3. Move turn signal lever all the way up (right parking light) or down (left parking light).

Confirmed by a signal and the corresponding turn signal control indicator.

To switch it off, switch on the ignition or move the turn signal lever in the opposite direction.

Reversing lights

The reversing light comes on when the ignition is on and reverse gear is selected.

Misted light covers

The inside of the light covers may mist up briefly in poor, wet and cold weather conditions, in heavy rain or after washing. The mist disappears quickly by itself; to help, switch on the headlights.

Interior lighting

Instrument panel illumination control

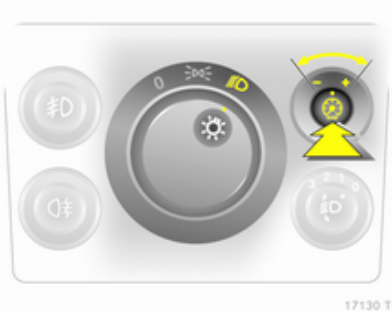

Brightness can be adjusted when the exterior lights are on: Press knob to disengage and then turn it and hold until the desired brightness is obtained.

Interior lights

During entry and exit of the vehicle, the front and centre courtesy lights automatically come on and then switch off after a delay.

Front courtesy light

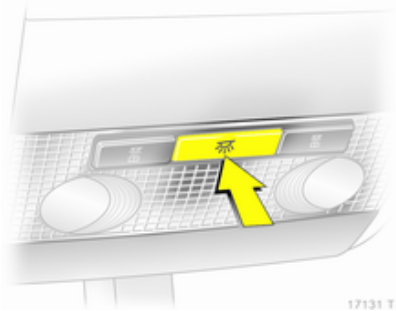

Operated with the button.

Centre and rear courtesy lights

There are two versions.

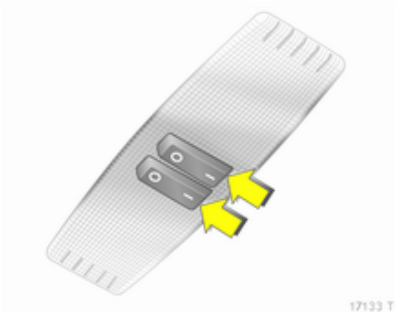

Operated with switch (I = on, 0 = off, centre = automatic).

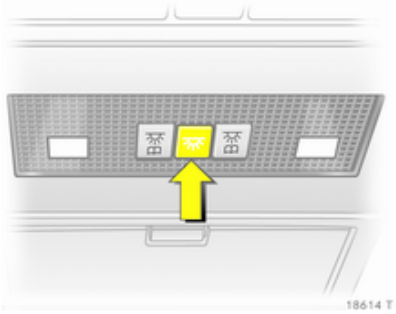

Deactivated with the button.

Reading lights

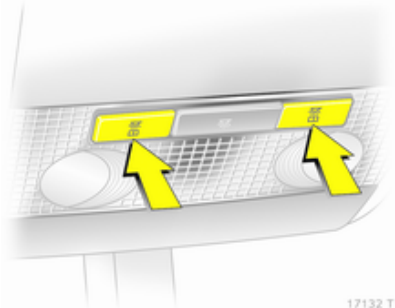

Operated with buttons or switch (I = on, 0 = off, centre = automatic)

Sunvisor lights

The lighting switches on when the cover is opened.

Lighting features

Centre console lighting

Spotlight in interior mirror housing. Daylight-dependent, automatically regulated centre console lighting.

Entry lighting

After unlocking the vehicle, the instrument panel lighting and the number plate lights come on for a few seconds.

Starting off ⇨ 17.

Exit lighting

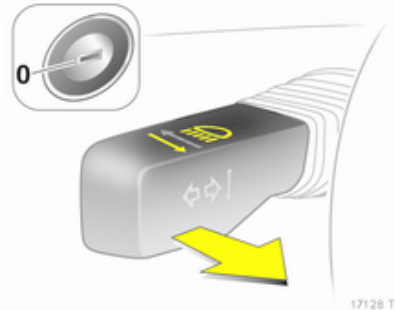

Headlights and reversing lights come on for approx. 30 seconds after the system is activated and the driver's door is closed.

Activating

1. Switch off ignition.
2. Remove ignition key.
3. Open driver's door.
4. Pull turn signal lever.
5. Close driver's door.

If the driver's door is not closed the lights switch off after two minutes.

The lighting is switched off immediately if the turn signal lever is pulled while the driver's door is open.

Battery discharge protection

To prevent the battery from becoming discharged, all the interior lighting is switched off automatically after 10 minutes, when the ignition is switched off.

Climate control

Climate control systems 117
Air vents 123
Maintenance 124

Climate control systems

Heating and ventilation system

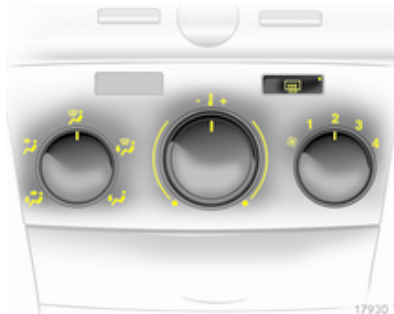

Controls for:

- Air distribution
- Temperature
- Fan speed

Heated rear window ⇨ 43.

Air distribution

= to head area and foot well
= to head area
= to windscreen and front door windows
= to windscreen, front door windows and foot well
= to foot well

Intermediate settings are possible.

Temperature

red = warm
blue = cold

Heating will not be fully effective until engine has reached normal operating temperature.

Fan speed

Adjust the air flow by switching the fan to the desired speed.

Demisting and defrosting the windows

- Set air distribution control to .
- Set temperature control to warmest level.
- Set fan speed to highest level.
- Switch on heated rear window .

- Open side air vents as required and direct them towards door windows.
- For simultaneous warming of the foot well, set air distribution control to .

Air conditioning system

In addition to the heating and ventilation system, the air conditioning system has:

= Cooling
= Air recirculation

Cooling

Operated with the button and is functional only when the engine and fan are running.

The air conditioning system cools and dehumidifies (dries) when outside temperature is above a specific level. Therefore condensation may form and drip from under the vehicle.

If no cooling or drying is required, switch the cooling system off to save fuel.

Air recirculation system

Operated with the button.

⚠ Warning

The exchange of fresh air is reduced in air recirculation mode. In operation without cooling the air humidity increases, so the windows may mist up. The quality of the passenger compartment air deteriorates, which may cause the vehicle occupants to feel drowsy.

Air distribution to : Air recirculation is deactivated.

Maximum cooling

Briefly open the windows so that hot air can disperse quickly.

- Cooling on.
- Air circulation system on,
- Set air distribution control to .
- Set temperature control to coldest level.
- Set fan speed to highest level.
- Open all vents.

Demisting and defrosting the windows

- Cooling on.
- Set air distribution control to .
- Set temperature control to warmest level.
- Set fan speed to highest level.
- Switch on heated rear window .

- Open side air vents as required and direct them towards door windows.
- For simultaneous warming of the foot well, set air distribution control to .

Automatic climate control system

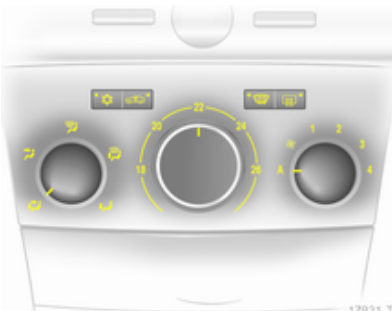

Controls for:

- Air distribution
- Temperature
- Fan speed

= Cooling
= Air recirculation
= Demisting and defrosting

Heated rear window 43.

The preselected temperature is automatically regulated. In the automatic mode the fan speed automatically regulates the air flow.

Automatic mode

Basic setting for maximum comfort:

- Set fan control to **A**.
- Set the air distribution control to the desired setting.
- Preset temperature to the desired level.
- Cooling on.
- Open all of the air vents.

Air distribution

= to head area and foot well
= to head area
= to windscreen and front door windows
= to windscreen, front door windows and foot well
= to foot well

Intermediate settings are possible.

Temperature preselection

Set the temperature control to the required position. Intermediate settings are possible.

For reasons of comfort, change temperature only in small increments.

At the end positions, there is no temperature regulation. The air conditioning system works with maximum cooling or heating.

Heating will not be fully effective until engine has reached normal operating temperature.

Fan speed

In the automatic mode **A** the fan speed automatically regulates the air flow. If required the air flow can be manually adjusted.

Cooling

Operated with the button and is functional only when the engine and fan are running.

The air conditioning system cools and dehumidifies (dries) when outside temperature is above a specific level. Therefore condensation may form and drip from under the vehicle.

If no cooling or drying is required, switch the cooling system off to save fuel.

Air recirculation system

The air recirculation mode is operated with the button.

⚠ Warning

The exchange of fresh air is reduced in air recirculation mode. In operation without cooling the air humidity increases, so the windows may mist up. The quality of the passenger compartment air deteriorates, which may cause the vehicle occupants to feel drowsy.

Maximum cooling

Briefly open the windows so that the heated air can disappear quickly.

- Cooling on.
- Set air distribution control to .
- Set temperature control to required temperature value.
- Set fan control to **A**.
- Open all vents.

The automatic climate control automatically cools to the specified value with the maximum cooling power.

With the temperature control turned to its minimum setting, the system continually runs at maximum cooling. The system is automatically set to air recirculation when the air conditioning is on.

Demisting and defrosting the windows

- Cooling on.
- Press button : in position **A**, fan automatically switches to maximum speed, the air distribution is directed towards the windscreen.
- Set temperature control to warmest level.
- Switch on heated rear window .

Electronic climate control system

Controls for:

- Temperature
- Air distribution and menu selection
- Fan speed

AUTO = Automatic mode
= air recirculation
= demisting and defrosting

Heated rear window ⊞ ⇨ 43.

The preselected temperature is automatically regulated. In the automatic mode the fan speed and air distribution automatically regulate the air flow.

The system can be manually adapted by use of air distribution and air flow controls.

Data is shown on the Info-Display. Setting modifications are briefly shown in the Info-Display, superimposing over the currently displayed menu.

The electronic climate control system is only fully operational when the engine is running.

Do not cover the sensor on the instrument panel for correct operation.

Automatic mode

Basic setting for maximum comfort:

- Press **AUTO** button.
- Open all air vents.
- **Air conditioning** on.
- Set desired temperature.

Temperature preselection

Temperatures can be set to the desired value.

For reasons of comfort, change temperature only in small increments.

If the minimum temperature is set, **Lo** appears in the display and the electronic climate control system runs at maximum cooling.

If the maximum temperature is set, **Hi** appears in the display and the electronic climate control system runs at maximum heating.

Fan speed

The selected fan speed is indicated with ✤ and a number in the display.

If the fan is switched off the air conditioning is also deactivated.

To return to automatic mode: Press **AUTO** button.

Demisting and defrosting the windows

Press the button. appears in the display.

Temperature and air distribution are set automatically and the fan runs at a high speed.

To return to automatic mode: press button or **AUTO**.

Switch on heated rear window ⊞.

Manual settings in climate menu

Climate control system settings can be changed via the centre control, the buttons and the menus shown on the display.

To view the menu, press the centre control. The **Climate** menu appears in the display.

Individual menu items are marked by turning the centre control and selected by pressing it.

To exit a menu, turn the centre control until **Return** or **Main** appear and select.

Air distribution

Turn the centre control. The **Air distribut.** menu is activated, showing the possible air distribution settings:

Top	=	to windscreen and front door windows.
Centre	=	to vehicle occupants.
Bottom	=	to foot well.

The **Air distribut.** menu can also be called up via the **Climate** menu.

Return to automatic air distribution: Deactivate corresponding setting or press button **AUTO**.

Cooling

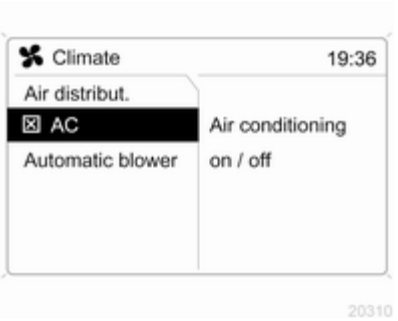

In the **Climate** menu, select menu item **AC** and activate or deactivate cooling.

The air conditioning system cools and dehumidifies (dries) when outside temperature is above a specific level. Therefore condensation may form and drip from under the vehicle.

If no cooling or drying is required, switch the cooling system off to save fuel, **Eco** appears in the display.

Fan regulation in automatic mode

Fan regulation in automatic mode can be adapted.

Select menu item **Automatic blower** from the **Climate** menu and select the desired fan regulation.

Manual air recirculation mode

The manual air recirculation mode is operated with the button.

⚠ Warning

The exchange of fresh air is reduced in air recirculation mode. In operation without cooling the air humidity increases, so the windows may mist up. The quality of the passenger compartment air deteriorates, which may cause the vehicle occupants to feel drowsy.

Air conditioning with the engine not running

When ignition is off, the residual heat or cooling in the system can be used for climate control in passenger compartment.

Press the **AUTO** button with the ignition off. **Residual air conditioning on** will appear briefly in the display.

Residual climate control can only operate for a limited period of time. To cancel, press the **AUTO** button.

Auxiliary heater

Air heater

Quickheat is an electric auxiliary air heater which automatically warms up the passenger compartment more quickly.

Coolant heater

Diesel-engined vehicles have a fuel-powered auxiliary coolant heater which warms up the engine coolant when the engine is running.

Air vents

Adjustable air vents

At least one air vent must be open while cooling is on in order to prevent the evaporator from icing up due to lack of air movement.

Air vents with adjuster wheel

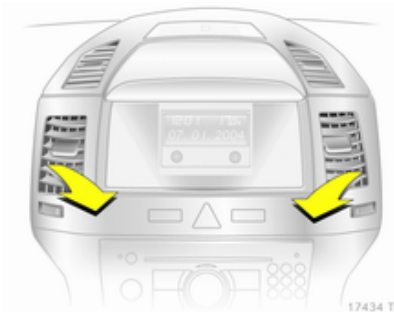

To open or close the vent, turn the adjuster wheel.

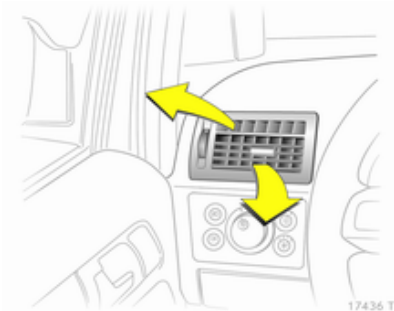

Direct the flow of air by tilting and swivelling the slats.

Air vents without adjuster wheel

Open slats and adjust direction of air flow.

To close the vents, direct slats downwards.

⚠Warning

Do not attach any objects to the slats of the air vents. Risk of damage and injury in case of an accident.

Fixed air vents

Additional air vents are located beneath the windscreen and door windows and in the foot wells.

Maintenance

Air intake

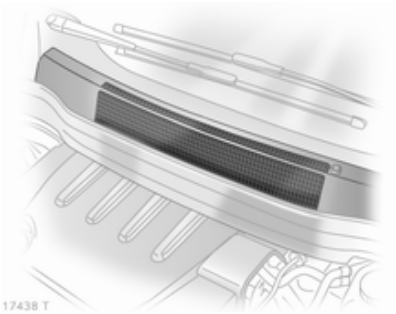

The air intakes in front of the windscreen in the engine compartment must be kept clear to allow air intake. Remove any leaves, dirt or snow.

Pollen filter

The pollen filter cleans dust, soot, pollen and spores from the air entering the vehicle through the air intake.

Air conditioning regular operation

In order to ensure continuously efficient performance, cooling must be operated for a few minutes once a month, irrespective of the weather and time of year. Operation with cooling is not possible when outside temperature is too low.

Service

For optimal cooling performance, it is recommended that the climate control system be checked annually, starting three years after initial vehicle registration, including:

- Functionality and pressure test
- Heating functionality
- Leakage check
- Check of drive belts
- Cleaning of condenser and evaporator drainage
- Performance check

Driving and operating

Driving hints 125
Starting and operating 125
Engine exhaust 128
Automatic transmission 129
Manual transmission 134
Manual transmission automated 135
Brakes 139
Ride control systems 140
Cruise control 142
Object detection systems 143
Fuel 145
Towing 148

Driving hints

Control of the vehicle

Never coast with engine not running

Many systems will not function in this situation (e.g. brake servo unit, power steering). Driving in this manner is a danger to yourself and others.

Pedals

To ensure the pedal travel is uninhibited, there must be no mats in the area of the pedals.

Starting and operating

New vehicle running-in

Do not brake unnecessarily hard for the first few journeys.

During the first drive, smoke may occur because of wax and oil evaporating off the exhaust system. Park the vehicle in the open for a while after the first drive and avoid inhaling the fumes.

During the running-in period fuel and engine oil consumption may be higher and the cleaning process of the diesel particle filter may take place more often. Diesel particle filter ⇨ 128.

Ignition switch positions

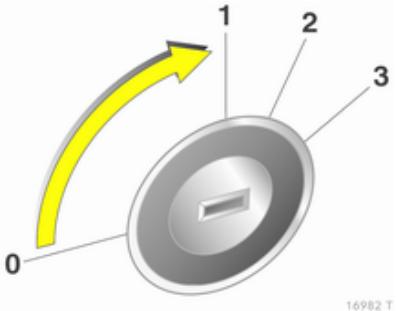

0 = Ignition off
1 = Steering wheel lock released, ignition off
2 = Ignition on, for diesel engine: preheating
3 = Starting

Starting the engine

Starting engine with ignition switch

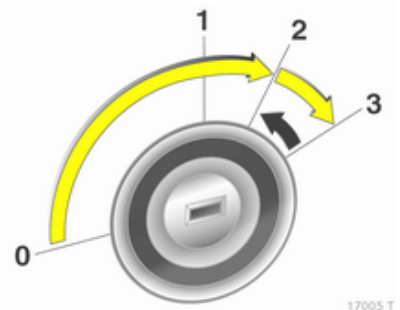

Operate clutch and brake, automatic transmission in **P** or **N**.

Do not operate accelerator pedal.

Diesel engines: turn the key to position 2 for preheating until control indicator ⌇ goes out.

Turn key briefly to position 3 and release key when engine is running.

Before restarting or to switch off the engine, turn key back to **0**.

Starting engine with the Start/Stop button

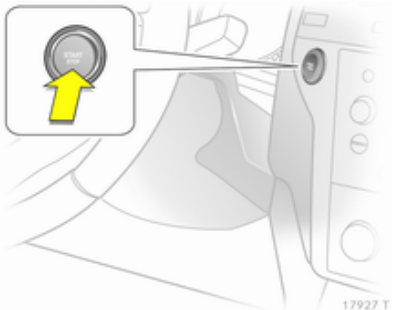

The electronic key must be inside the vehicle. Operate clutch and brake, automatic transmission in **P** or **N**.

Do not operate accelerator pedal.

Diesel engines: press the button briefly to start preheating, move the steering wheel slightly to release the steering wheel lock, wait until control indicator ⌇ goes out and then press button for 1 second and release when the engine is running.

To repeat the starting procedure or to switch off the engine, press the button again.

Starting the vehicle at low temperatures

The start of the engine without additional heaters is possible down to -25 °C for diesel engines and -30 °C for petrol engines. Required is an engine oil with the correct viscosity, the correct fuel, performed services and a sufficiently charged battery. With temperatures below -30 °C the automatic transmission and the manual transmission automated need a warming phase of approx. 5 minutes. The selector lever must be in position **P** respectively **N**.

Overrun cut-off

The fuel supply is automatically cut off during overrun, i.e. when the vehicle is driven with a gear engaged but accelerator is released.

Parking

- Do not park the vehicle on an easily ignitable surface. The high temperature of the exhaust system could ignite the surface.
- Always apply parking brake without pressing release button. Apply as firmly as possible on downhill or uphill slopes. Depress the foot brake at same time to reduce operating force.
- Switch off the engine and ignition. Turn the steering wheel until the steering wheel lock engages.
- If the vehicle is on a level surface or uphill slope, engage first gear or set the selector lever to **P** before switching off the ignition. On an uphill slope, turn the front wheels away from the kerb.

  If the vehicle is on a downhill slope, engage reverse gear or set the selector lever to **P** before switching off the ignition. Turn the front wheels towards the kerb.
- Lock the vehicle and activate the anti-theft locking system and the anti-theft alarm system.

Engine exhaust

⚠ Danger

Engine exhaust gases contain poisonous carbon monoxide, which is colourless and odourless and could be fatal if inhaled.

If exhaust gases enter the interior of the vehicle, open the windows. Have the cause of the fault rectified by a workshop.

Avoid driving with an open load compartment, otherwise exhaust gases could enter the vehicle.

Diesel particle filter

The diesel particle filter system filters harmful soot particles out of the exhaust gases. The system includes a self-cleaning function that runs automatically during driving. The filter is cleaned by burning off the soot particles at high temperature. This process takes place automatically under set driving conditions and may take up to 25 minutes. Fuel consumption may be higher during this period. The emission of smells and smoke during this process is normal.

Under certain driving conditions, e.g. short distances, the system cannot clean itself automatically.

If the filter requires cleaning and previous driving conditions did not enable automatic cleaning, control indicator flashes. Continue driving, keeping engine speed above 2000 revolutions per minute. Shift down if necessary. Diesel particle filter cleaning is then started.

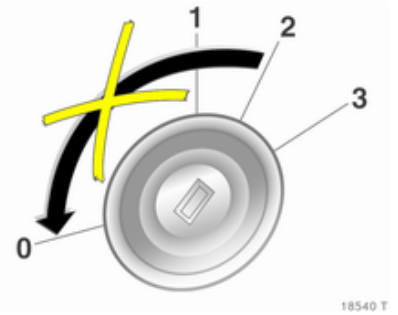

Stopping the journey or switching off the engine during cleaning is not recommended.

Caution

If the cleaning process is interrupted more than once, there is a great risk of provoking severe engine damage.

Cleaning takes place quickest at high engine speeds and loads.

The control indicator extinguishes as soon as the self-cleaning operation is complete.

If illuminates additionally, cleaning is not possible, seek the assistance of a workshop.

Catalytic converter

The catalytic converter reduces the amount of harmful substances in the exhaust gases.

Caution

Fuel grades other than those listed on pages ⇨ 145, ⇨ 202 could damage the catalytic converter or electronic components.

Unburnt petrol will overheat and damage the catalytic converter. Therefore avoid excessive use of the starter, running the fuel tank dry and starting the engine by pushing or towing.

In the event of misfiring, uneven engine running, a reduction in engine performance or other unusual problems, have the cause of the fault rectified by a workshop as soon as possible. In an emergency, driving can be continued for a short period, keeping vehicle speed and engine speed low.

Automatic transmission

The automatic transmission makes automatic shifting possible (automatic mode) and the version with ActiveSelect also makes manual shifting possible (manual mode).

Transmission display

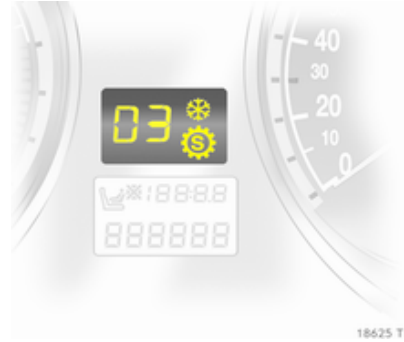

The mode or selected gear is shown in the transmission display.

On vehicles with Open&Start system, P flashes in the transmission display when the ignition is switched off if **P** is not engaged or the parking brake is not applied.

If Sport mode is activated, ⚙ is illuminated.

If the Winter programme is activated, ❄ is illuminated.

Selector lever

P = park position, front wheels locked, engage only when the vehicle is stationary and the parking brake is applied
R = reverse gear, engage only when vehicle is stationary
N = neutral
D = automatic mode with all gears

The selector lever can only be moved out of **P** or **N** when the ignition is on and the foot brake is depressed (Selector lever lock).

When the selector lever is in **N**, the selector lever lock is activated after a delay and only if the vehicle is stationary.

When the selector lever is in the **P** or **N** position, control indicator ⊘ in the gear indicator strip illuminates red when the selector lever is locked. If the selector lever is not in the **P** position when the ignition is switched off, control indicator ⊘ and **P** in the gear indicator strip flash.

To engage **P** or **R**, press the release button on selector lever.

When position **N** is selected, press foot brake or engage parking brake before starting.

Do not accelerate while engaging a gear. Never depress the accelerator pedal and brake pedal at the same time.

When a gear is engaged, the vehicle slowly begins to creep when the brake is released.

Gears 3, 2, 1

3, 2, 1 = Transmission does not shift above the selected gear.

Press button on selector lever to engage **3** or **1**.

Only select **3**, **2** or **1** to prevent automatic upshifting or as an aid in engine braking.

Engine braking

To utilise the engine braking effect, select a lower gear in good time when driving downhill.

Rocking the vehicle

Rocking the vehicle is only permissible if the vehicle is stuck in sand, mud or snow. Move the selector lever between **D** and **R** in a repeat pattern. Do not race the engine and avoid sudden acceleration.

Parking

Apply the parking brake and engage **P**.

The ignition key can only be removed when the selector lever is in position **P**.

Manual mode

Move selector lever out of position **D** towards the left and then forwards or backwards.

+ = Shift to a higher gear.

- = Shift to a lower gear.

If a higher gear is selected when vehicle speed is too low, or a lower gear when vehicle speed is too high, the shift is not executed.

If engine speed is too low, the transmission automatically shifts to a lower gear above a specific vehicle speed.

No automatic shifting to a higher gear takes place at a high engine speed.

For reasons of safety, kickdown is also available in manual mode.

Electronic driving programmes

- Following a cold start, the operating temperature programme increases engine speed to quickly bring the catalytic converter to the required temperature.
- The automatic neutral shift function automatically shifts to idling when the vehicle is stopped with a forward gear engaged.
- When Sport mode is engaged, the vehicle shifts at higher engine speeds (unless cruise control is on). Sport mode ⇨ 141.

Winter programme ❄

Activate the Winter programme to assist starting off on a slippery road surface.

Activation on vehicles without manual mode

Press the ❄ button with **P**, **R**, **N**, **D** or **3** engaged. The vehicle starts off in 3rd gear.

Activation on vehicles with manual mode

In automatic mode, press the ❄ button. Depending on road conditions, the vehicles starts off in 2nd or 3rd gear.

Deactivation

The Winter programme is switched off by:

- pressing the ❄ button again,
- manually selecting **2** or **1**,
- changing to manual mode,
- turning off the ignition,
- or if the transmission oil temperature is too high.

Kickdown

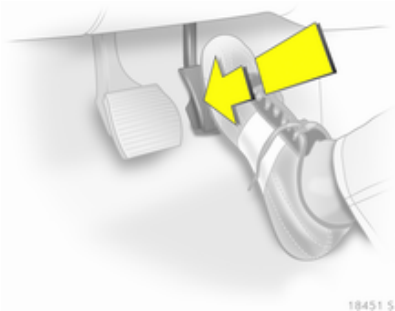

If the accelerator pedal is pressed past the pressure point, the transmission shifts to a lower gear depending on engine speed.

Fault

In the event of a fault, illuminates. The transmission no longer shifts automatically. Continued travel is possible with manual shifting.

Have the cause of the fault remedied by a workshop.

Version without manual mode

2nd gear is not available. Manual shifting:

1 = 1st gear
2 = 3rd gear
3, D = 4th gear

Version with manual mode

Only the highest gear is available. Depending on the fault, 2nd gear may also be available in manual mode.

Interruption of power supply

In the event of an interruption of power supply, the selector lever cannot be moved out of the **P** or **N** position.

If the battery is discharged, start the vehicle using jump leads ⇨ 186.

If the battery is not the cause of the fault, release selector lever:

1. Apply parking brake.

2. Remove ashtray insert ⇨ 82. Slacken the screw on the metal cover and remove the two pieces. Vehicle tools ⇨ 173.
3. Unclip ashtray holder or cover: reach into the opening at the top edge, unclip the ashtray holder or cover and remove.

4. Pull the loop and move the selector lever out of **P** or **N**. If **P** or **N** is engaged again, the selector lever will be locked in position again. Have the cause of the power supply interruption remedied by a workshop.
5. Put on ashtray holder or cover and engage.
6. Fasten the metal cover with the screw. Fit the ashtray insert ⇨ 82.

Manual transmission

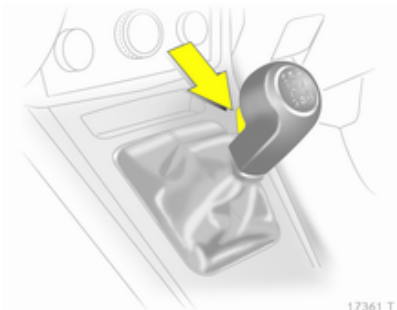

To engage reverse, with the vehicle stationary wait 3 seconds after declutching and then press the release button on the selector lever and engage the gear.

If the gear does not engage, set the lever to neutral, release the clutch pedal and depress again; then repeat gear selection.

Do not grind the clutch unnecessarily.

When operating, depress the clutch pedal completely. Do not use the pedal as a foot rest.

Caution
It is not advisable to drive with the hand resting on the selector lever.

Manual transmission automated

The Easytronic transmission permits manual (manual mode) or automatic gear shifting (automatic mode), both with automatic clutch control.

Transmission display

Shows the mode and current gear.

The display flashes for a few seconds when **A**, **M** or **R** is selected with the engine running and the foot brake not activated.

If the Winter programme is activated, ❄ is illuminated.

Starting the engine

Depress the foot brake when starting the engine. If the foot brake is not depressed, ⊘ illuminates in the instrument, "N" flashes in the transmission display and the engine cannot be started.

Starting is not possible if all brake lights fail.

When the foot brake is depressed, the transmission automatically shifts to **N** upon start. There may be a slight delay.

Selector lever

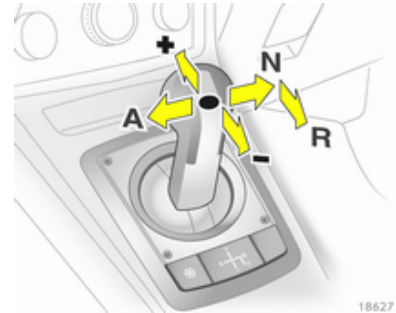

Always move the selector lever in the appropriate direction as far as it will go. Upon release, it automatically returns to the centre position.

N = Neutral.
A = Switch between automatic and manual mode. The transmission display shows **A** or **M**.
R = Reverse gear. Engage only when vehicle is stationary.
+ = Shift to a higher gear.
- = Shift to a lower gear.

Starting off

Depress the foot brake and move the selector lever to **A**, **+** or **-**. The transmission is in automatic mode and first gear is engaged. If **R** is selected, reverse gear is engaged.

The vehicle starts to move when the brake is released.

To start off without depressing the foot brake, accelerate immediately after engaging a gear.

If neither the accelerator nor the brake pedal are depressed, no gear is engaged and **A** or **R** flashes for a brief time in the display.

Stopping the vehicle

In **A**, first gear is engaged and the clutch is released when the vehicle is stopped. In **R**, reverse gear remains engaged.

Engine braking

Automatic mode

When driving downhill, the manual transmission automated does not shift into higher gears until a fairly high engine speed has been reached. It shifts down in good time when braking.

Manual mode

To utilise the engine braking effect, select a lower gear in good time when driving downhill.

Rocking the vehicle

Rocking the vehicle is only permissible if the vehicle is stuck in sand, mud or snow. Move the selector lever between **R** and **A** in a repeat pattern. Do not race the engine and avoid sudden acceleration.

Parking

Apply the parking brake. The most recently engaged gear (see transmission display) remains engaged. With **N**, no gear is engaged.

When the ignition is switched off the transmission no longer responds to movement of the selector lever.

Manual mode

If a higher gear is selected when the engine speed is too low, or a lower gear when the speed is too high, the shift is not executed. This prevents the engine from running at too low or too high an engine speed.

If engine speed is too low, the transmission automatically shifts to a lower gear.

If engine speed is too high, the transmission only switches to a higher gear via kickdown.

When **+** or **-** is selected in automatic mode, the transmission switches to manual mode and shifts accordingly.

Electronic driving programmes

- Following a cold start, the operating temperature programme increases engine speed to quickly bring the catalytic converter to the required temperature.

- The adaptive programme tailors gearshifting to the driving conditions, e.g. greater load or gradients.
- When Sport mode is engaged, shift times are reduced and the transmission shifts at higher engine speeds (unless cruise control is on). Sport mode ⇨ 141.

Winter programme ❄

Activate the Winter programme if you have problems starting off on a slippery road surface.

Activation

Press the ❄ button. The transmission switches to automatic mode. The vehicle starts off in 2nd gear. Sport mode is deactivated.

Deactivation

The Winter programme is switched off by:

- pressing the ❄ button again
- turning off the ignition,
- switching to manual mode (when switched back to automatic mode, the Winter programme is again active)
- when clutch temperature is too high

Kickdown

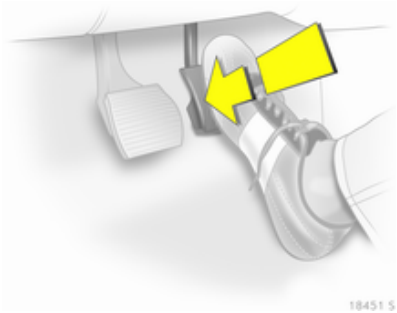

If the accelerator pedal is pressed past the pressure point, the transmission shifts to a lower gear depending on engine speed.

Fault

To prevent damage to the manual transmission automated, the clutch is engaged automatically at high clutch temperatures.

illuminates in the event of a fault. Continued driving is possible. Manual mode cannot be used for shifting.

If **F** appears in the transmission display, continued driving is not possible.

Have the cause of the fault remedied by a workshop.

Interruption of power supply

The clutch is not disengaged if there is an interruption of the power supply when a gear is engaged. The vehicle cannot move.

If the battery is discharged, start the vehicle using jump leads ⇨ 186.

If the cause of the fault is not a discharged battery, seek the assistance of a workshop.

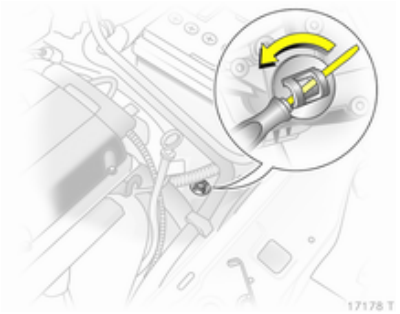

If the vehicle must be moved out of the flow of traffic, disengage the clutch as follows:

1. Apply parking brake and switch off ignition.
2. Open the bonnet ⇨ 155.
3. Clean the transmission around the cap so that no dirt can get into the opening when the cap is removed.
4. Rotate cap to slacken and remove by lifting upwards.
5. Using a flat-head screwdriver, turn the adjusting screw under the cap clockwise until clear resistance can be felt. The clutch has now been disengaged.
6. Refit cleaned cap. The cap must be in full contact with the housing.

Caution

Do not turn beyond the resistance since this could damage the transmission.

Caution

Towing the vehicle and starting the engine is not permitted when the clutch has been disengaged in this way, although the vehicle can be moved a short distance.

Seek the immediate assistance of a workshop.

Brakes

The brake system comprises two independent brake circuits.

If a brake circuit fails, the vehicle can still be braked using the other brake circuit. However, braking effect is achieved only when you depress the brake pedal firmly. You need to use considerably more force for this. The braking distance is extended. Seek the assistance of a workshop before continuing your journey.

When the engine is not running, the support of the brake servo unit disappears once the brake pedal has been depressed once or twice. Braking effect is not reduced, but braking requires significantly greater force. It is especially important to bear this in mind when being towed.

Control indicator ⓘ ⇨ 90.

Antilock brake system

Antilock brake system (ABS) prevents the wheels from locking.

ABS starts to regulate brake pressure as soon as a wheel shows a tendency to lock. The vehicle remains steerable, even during hard braking.

ABS control is made apparent though a pulse in the brake pedal and the noise of the regulation process.

For optimum braking, keep the brake pedal fully depressed throughout the braking process, despite the fact that the pedal is pulsating. Do not reduce the pressure on the pedal.

After starting off the system performs a self-test which may be audible.

Control indicator (ABS) ⇨ 90.

Adaptive brake lamp

During full braking, all three brake lamps flash for the duration of ABS control.

Fault

⚠ Warning

If there is a fault in the ABS, the wheels may be liable to lock due to braking that is heavier than normal. The advantages of ABS are no longer available. During hard braking, the vehicle can no longer be steered and may swerve.

Have the cause of the fault remedied by a workshop.

Parking brake

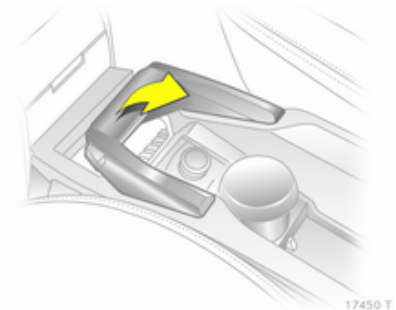

Always apply parking brake firmly without operating the release button, and apply as firmly as possible on a downhill or uphill slope.

To release the parking brake, pull the lever up slightly, press the release button and fully lower the lever.

To reduce the operating forces of the parking brake, depress the foot brake at the same time.

Control indicator (!) ⇨ 90.

Brake assist

If the brake pedal is depressed quickly and forcefully, maximum brake force is automatically applied (full braking).

Maintain steady pressure on the brake pedal for as long as full braking is required. Maximum brake force is automatically reduced when the brake pedal is released.

Hill start assist

The system helps prevent unintended movement when driving away on inclines.

When releasing the foot brake after stopping on an incline, the brakes remain on for a further 2 seconds. The brakes release automatically as soon as the vehicle begins to accelerate.

Ride control systems

Electronic stability program

Electronic stability program (ESP®Plus) improves driving stability when necessary, regardless of the type of road surface or tyre grip. It also prevents the drive wheels from spinning.

As soon as the vehicle starts to swerve (understeer/oversteer), engine output is reduced and the wheels are braked individually. This considerably improves the driving stability of the vehicle on slippery road surfaces.

ESP®Plus is operational as soon as control indicator extinguishes.

When ESP®Plus comes into action flashes.

⚠ Warning

Do not let this special safety feature tempt you into taking risks when driving.

Adapt speed to the road conditions.

Control indicator ⇨ 91.

Deactivation

ESP®Plus can be deactivated when Sport mode is engaged for high-performance driving:

Hold the **SPORT** button depressed for about 4 seconds. Control indicator illuminates. **ESPoff** also appears in the service display.

⚠ Warning

Do not deactivate ESP®Plus if a run-flat tyre has lost pressure.

ESP®Plus is reactivated by pressing the **SPORT** button. **ESPon** appears in the service display. ESP®Plus is also reactivated the next time the ignition is switched on.

Sport mode ⇨ 141.

Interactive driving system

Interactive driving system (IDSPlus) combines the electronic stability program (ESP®Plus) with the antilock brake system (ABS) and continuous damping control (CDC) to improve driving dynamics and vehicle safety.

Sport mode

Suspension and steering become more direct and provide better contact with the road surface. The engine reacts more quickly to accelerator pedal movements.

Automatic gear changing is also more responsive.

Control indicator **IDSPlus** ⇨ 92.

Activation

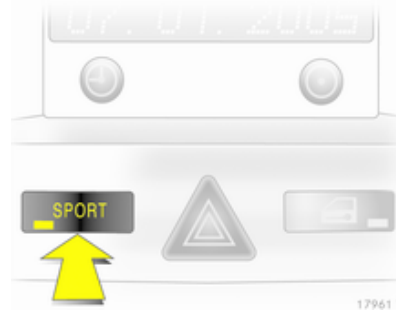

Press **SPORT** button.

Control indicator ⇨ 90.

Winter programme activation not possible.

Deactivation

Briefly press the **SPORT** button. Sport mode is deactivated the next time the ignition is switched on or if the Winter programme is activated.

Continuous damping control

Continuous damping control (CDC) changes suspension with damping adaptation of each shock absorber to the current driving situation and road conditions.

When Sport mode is engaged, the damping control is adapted to a sportier driving style.

Control indicator **IDS+** ⇨ 92.

Automatic level control

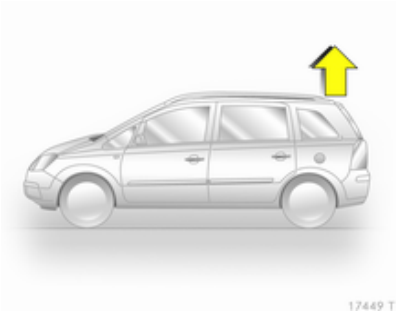

The rear level of the vehicle is automatically adjusted to the load conditions while driving. Suspension and ground clearance are increased, which improves driving conditions.

The automatic level control is activated after the vehicle has been driven for some distance, depending on the vehicle loading and the road conditions.

Do not use full payload in the event of a fault. Have the cause of the fault remedied by a workshop.

Cruise control

The cruise control can store and maintain speeds of approx. 30 to 200 km/h. Deviations from the stored speeds may occur when driving uphill or downhill.

For safety reasons the cruise control cannot be activated until the foot brake has been operated once.

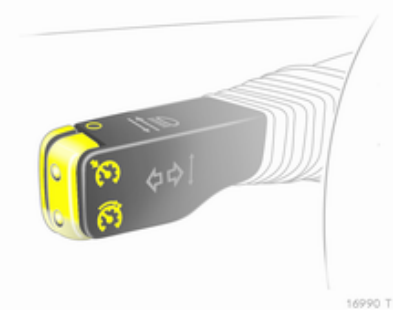

Do not use the cruise control if it is not advisable to maintain a constant speed.

With automatic transmission or manual transmission automated, only activate cruise control in automatic mode.

Control indicator ⌀ ⇨ 94.

Activation

Briefly press the ⌀ button: the current speed is stored and maintained.

Vehicle speed can be increased by depressing the accelerator pedal. When the accelerator pedal is released, the previously stored speed is resumed.

The speed is saved until the ignition is switched off.

To resume the saved speed, briefly press the ⌀ button at a speed above 30 km/h.

Increase speed

With cruise control active, hold down button ⌀ or briefly press it repeatedly: speed is increased continuously or in small increments.

When button ⌀ is released the current speed is stored and maintained.

Reduce speed

With cruise control active, hold down button ⌀ or briefly press it repeatedly: speed is reduced continuously or in small increments.

When button ⌀ is released the current speed is stored and maintained.

Deactivation

Briefly press the O button: cruise control is deactivated.

Automatic deactivation:

- Vehicle speed below approx. 30 km/h
- The brake pedal is depressed
- The clutch pedal is depressed
- Selector lever in **N**.

Object detection systems

Parking assist

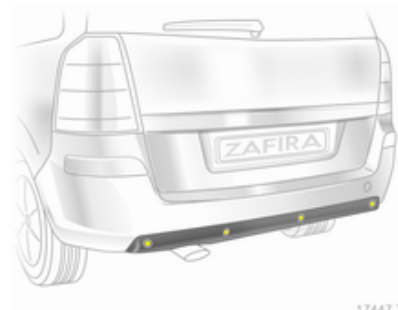

The parking assist makes parking easier by measuring the distance between the vehicle and obstacles. It is the driver, however, who bears full responsibility for parking.

The system consists of four ultrasonic parking sensors in each of the front and rear bumpers.

Control indicator P⁾⁾▲ ⇨ 90.

Note
Attached parts in the detection area cause system malfunction.

Activation

When reverse gear is engaged, the system switches itself on automatically.

The system can also be activated at low speed by pressing the P⁾⁾▲ button.

An obstacle is indicated by buzzers. The interval between the buzzers becomes shorter as the vehicle gets closer to the obstacle. When the distance is less than 30 cm, the buzzer is continuous.

⚠ Warning

Under certain circumstances, various reflective surfaces on objects or clothing as well as external noise sources may cause the system to fail to detect obstacles.

Deactivation

Deactivate the system by pressing the P⁾⁾▲ button.

The system automatically switches itself off when the vehicle is driven above a certain speed.

Towing equipment

The system automatically detects factory-fitted towing equipment.

The rear parking sensors are deactivated when towing.

Fuel

Fuel for petrol engines

Only use unleaded fuel that complies with European standard EN 228 or E DIN 51626-1 or equivalent.

Your engine is capable to run with E10 fuel that fulfills these standards. E10 fuel contains up to 10 % bioethanol.

Use fuel with the recommended octane rating ⇨ 202. Use of fuel with too low an octane rating can reduce engine power and torque and slightly increases fuel consumption.

Caution

Do not use fuel or fuel additives that contain metallic compounds such as manganese-based additives. This may cause engine damage.

Caution

Use of fuel that does not comply to EN 228 or E DIN 51626-1 or equivalent can lead to deposits or engine damage and may affect your warranty.

Caution

Use of fuel with too low an octane rating could lead to uncontrolled combustion and engine damage.

Fuel for diesel engines

Only use diesel fuel that complies with EN 590.

In countries outside the European Union use Euro-Diesel fuel with a sulfur concentration below 50 ppm.

Caution

Use of fuel that does not comply to EN 590 or similar can lead to engine powerloss, increased wear or engine damage and may affect your warranty.

Do not use marine diesel oils, heating oils, Aquazole and similar diesel-water emulsions. Diesel fuels must not be diluted with fuels for petrol engines.

Fuel for natural gas operation

Use natural gas with a methane content of approx. 78 - 99 %. L-gas (low) has approx. 78 - 87 % and H-gas (high) has approx. 87 - 99 %. Biogas with the same methane content can also be used if it has been chemically prepared and desulphurised.

Only use natural gas or biogas that complies with DIN 51624.

Liquid gas or LPG must not be used.

Refuelling

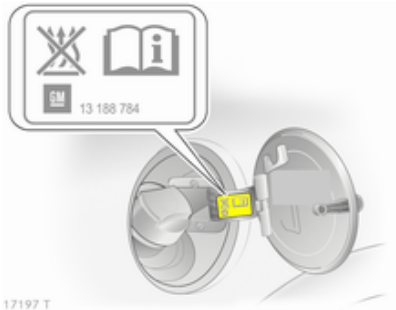

⚠ Danger

Before refuelling, switch off engine and any external heaters with combustion chambers (identified by sticker on fuel filler flap). Switch off any mobile phones.

Follow the operating and safety instructions of the filling station when refuelling.

⚠ Danger

Fuel is flammable and explosive. No smoking. No naked flames or sparks.

If you can smell fuel in your vehicle, have the cause of this remedied immediately by an authorized dealer.

Caution

In case of misfuelling, do not switch on ignition.

Fuel filler flap is located at right rear side of vehicle.

The fuel filler flap can only be opened if the vehicle is unlocked. Pull flap at the recess and open.

To open, turn the cap slowly to the left.

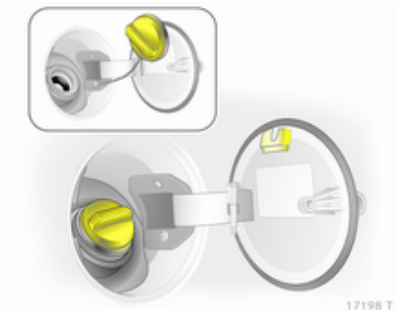

The fuel filler cap can be retained in the bracket on the fuel filler flap.

For refuelling, fully insert the pump nozzle and switch it on.

After automatic cut-off, it can be topped up with max. two doses of fuel.

Caution

Wipe off any overflowing fuel immediately.

To close, turn the fuel filler cap to the right until it clicks.

Close the flap and let engage.

Natural gas refuelling

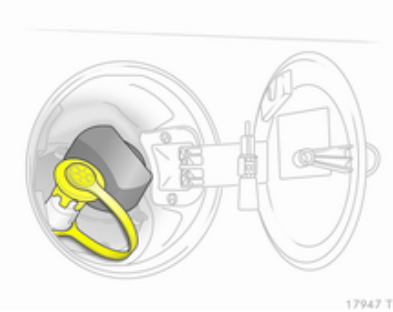

When filling with natural gas, remove the protective cap from the filler neck.

⚠Warning

Refuel only with a maximum output pressure of 250 bar. Use only temperature compensated filling stations.

The refuelling procedure must be completed, i.e. the filler neck must be vented. Refit the protective cap.

The capacity of the natural gas tank depends on outside temperature, filling pressure and type of refuelling system.

Terms for "natural gas vehicles" abroad:

German	Erdgasfahrzeuge
English	NGVs = Natural Gas Vehicles
French	Véhicules au gaz naturel – or – Véhicules GNV
Italian	Metano auto

Terms for "natural gas" abroad:

German	Erdgas
English	CNG = Compressed Natural Gas
French	GNV = Gaz Naturel (pour) Véhicules - or - CGN = carburantgaz naturel
Italian	Metano (per auto)

Fuel filler cap

Only use genuine fuel filler caps. Diesel-engined vehicles have special fuel filler caps.

Fuel consumption - CO_2-Emissions

Petrol, diesel

The fuel consumption is within a range of 4.5 to 13.4 l/100 km.

The CO_2 emission is within a range of 138 to 230 g/km.

Natural gas

The gas consumption is within a range of 3.9 to 7.1 kg/100 km.

The CO_2 emission is within a range of 138 to 139 g/km.

General information

For the values specific for your vehicle, refer to the EEC Certificate of Conformity provided with your vehicle or other national registration documents.

The determination of fuel consumption is regulated by directive R (EC) No. 715/2007 (in the newest version respectively).

The specification of CO_2 emission is also a constituent of the directive.

The figures given must not be taken as a guarantee for the actual fuel consumption of a particular vehicle. Furthermore, fuel consumption is dependent on personal driving style as well as road and traffic conditions.

All values are based on the EU base model with standard equipment.

The calculation of fuel consumption takes into account the vehicle's kerb weight, ascertained in accordance with the regulations. Optional equipment may result in slightly higher fuel consumption and CO_2 emission levels and a lower maximum speed.

Towing

General information

Only use towing equipment that has been approved for your vehicle. Entrust retrofitting of towing equipment to a workshop. It may be necessary to make changes that affect the cooling system, heat shields or other equipment.

Fitting of towing equipment could cover the opening of the towing eye. If this is the case use the coupling ball bar for towing. Always keep the coupling ball bar in the vehicle.

Installation dimensions of factory-fitted towing equipment ⇨ 215.

Driving characteristics and towing tips

Before attaching a trailer, lubricate the coupling ball. However, do not do so if a stabiliser, which acts on the coupling ball, is being used to reduce snaking movements.

For trailers with low driving stability and trailers with a permitted gross vehicle weight of more than 1300 kg a speed of 80 km/h must not be exceeded; the use of a stabiliser is recommended.

If the trailer starts snaking, drive more slowly, do not attempt to correct the steering and brake sharply if necessary.

When driving downhill, drive in the same gear as if driving uphill and drive at a similar speed.

Adjust tyre pressure to the value specified for full load ⇨ 211.

Trailer towing

Trailer loads

The permissible trailer loads are vehicle and engine-dependent maximum values which must not be exceeded. The actual trailer load is the difference between the actual gross weight of the trailer and the actual coupling socket load with the trailer coupled.

The permissible trailer loads are specified in the vehicle documents. In general, they are valid for gradients up to max. 12 %

The permitted trailer load applies up to the specified incline and up to an altitude of 1000 metres above sea level. Since engine power decreases as altitude increases due to the air becoming thinner, therefore reducing climbing ability, the permissible gross train weight also decreases by 10 % for every 1000 metres of additional altitude. The gross train weight does not have to be reduced when driving on roads with slight inclines (less than 8 %, e. g. motorways).

The permissible gross train weight must not be exceeded. This weight is specified on the identification plate ⇨ 198.

Vertical coupling load

The vertical coupling load is the load exerted by the trailer on the coupling ball. It can be varied by changing the weight distribution when loading the trailer.

The maximum permissible vertical coupling load (75 kg) is specified on the towing equipment identification plate and in the vehicle documents. Always aim for the maximum load, especially in the case of heavy trailers. The vertical coupling load should never fall below 25 kg.

Rear axle load

When the trailer is coupled and the towing vehicle fully loaded, the permissible rear axle load (see identification plate or vehicle documents) may be exceeded by 90 kg and the gross vehicle weight rating by 75 kg. If the permissible rear axle load is exceeded, a maximum speed of 100 km/h applies.

Towing equipment

Caution
When operating without a trailer, remove the coupling ball bar.

Stowage of coupling ball bar

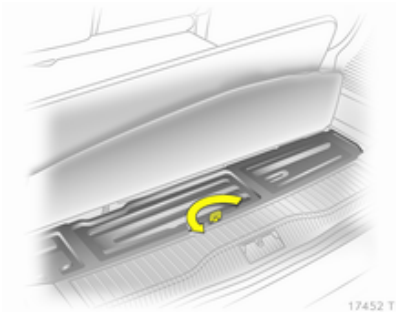

To open the cover, lift the carpeting. Raise, rotate and lift the ring.

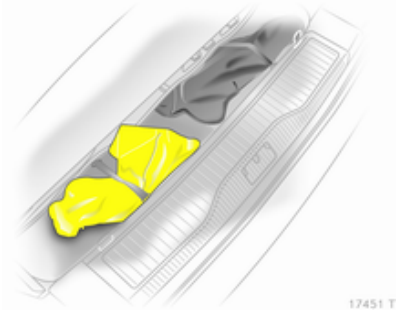

The pouch with the coupling ball bar is held in place with a rubber strap.

When inserting, ensure that the rotary handle of the coupling ball bar is facing upwards.

Fitting the coupling ball bar

From underneath at the recesses, pull the cover in the bumper rearwards at a slight angle.

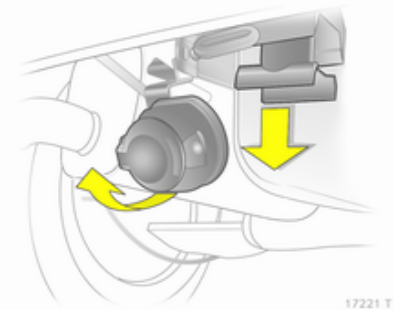

Disengage and fold down the socket. Remove the sealing plug from the opening for the coupling ball bar and stow it.

Checking the tensioning of the coupling ball bar

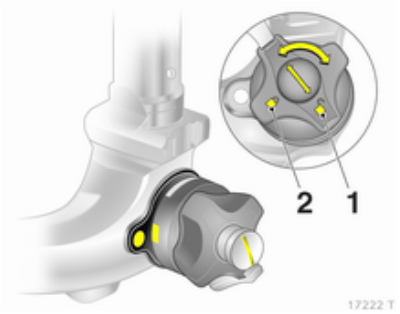

- Red marking on rotary knob must point towards white marking on coupling ball bar.
- The gap between the rotary knob and the coupling ball bar must be approx. 6 millimetres.
- Key must be at position (**1**).

Otherwise, the coupling ball bar must be tensioned before being inserted:

- Unlock coupling ball bar by turning key to position (**1**)

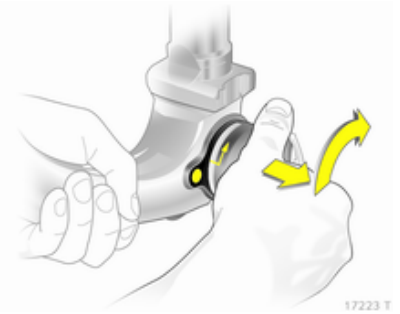

- Pull out rotary knob and turn clockwise as far as it will go.

Inserting the coupling ball bar

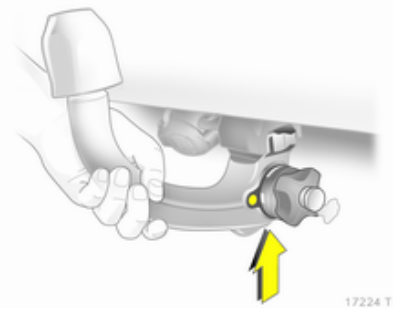

Insert the tensioned coupling ball bar in the opening and push firmly upwards until it audibly engages.

The rotary handle snaps back into its original position resting against the coupling ball bar without a gap.

⚠Warning

Do not touch rotary handle during insertion.

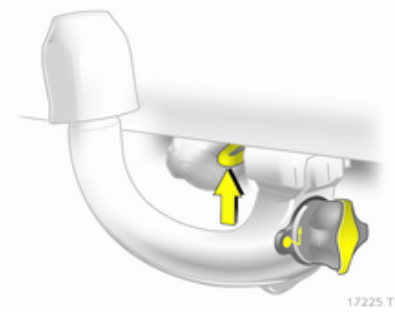

Lock the coupling ball bar by turning the key to position 🔒 (**2**). Remove the key and close the protective flap.

Eye for break-away stopping cable

Attach breakaway stopping cable to eye.

Check that the coupling ball bar is correctly installed

- Green marking on rotary knob must point towards white marking on coupling ball bar.
- There must be no gap between the rotary handle and the coupling ball bar.
- The coupling ball bar must be firmly engaged in the opening.
- The coupling ball bar must be locked and the key removed.

⚠Warning

Towing a trailer is permitted only when a coupling ball bar is fitted correctly. If the coupling ball bar does not engage correctly, seek the assistance of a workshop.

Dismounting the coupling ball bar

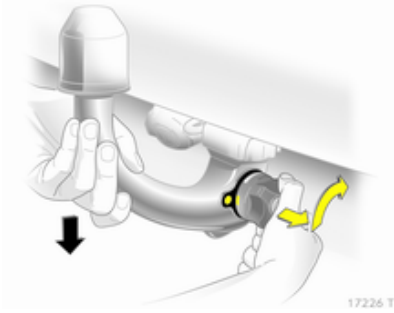

Open the protective flap and turn the key to position 🔓 (**1**) to unlock the coupling ball bar.

Pull out rotary handle and turn clockwise as far as it will go. Pull out coupling ball bar downwards.

Insert sealing plug in opening. Fold away socket.

Insert cover in bumper: Insert guides of cover into bumper, first in the front and then in the rear and engage. Compress cover in a slightly bent position while doing so.

Trailer stability assist

If the system detects snaking movements, engine power is reduced and the vehicle/trailer combination is selectively braked until the snaking ceases.

Trailer stability assistant (TSA) is a function of the Electronic Stability Program (ESP®Plus) ⇨ 140.

Vehicle care

General Information 153
Vehicle checks 154
Bulb replacement 160
Electrical system 167
Vehicle tools 173
Wheels and tyres 174
Jump starting 186
Towing 187
Appearance care 189

General Information

Accessories and vehicle modifications

We recommend using genuine parts and accessories and factory approved parts specific for your vehicle type. We cannot assess or guarantee reliability of other products - even if they have a regulatory or otherwise granted approval.

Do not make any modifications to the electrical system, e.g. changes of electronic control units (chip tuning).

Caution
When transporting the vehicle on a train or on a recovery vehicle, the mud flaps might be damaged.

Vehicle storage

Storage for a long period of time

Following must be done if the vehicle should be stored for several months:

- Wash and wax the vehicle.
- Have the wax in the engine compartment and underbody checked.
- Clean and preserve rubber seals.
- Fill up fuel tank completely.
- Change engine oil.
- Drain washer fluid reservoir.
- Check coolant antifreeze.
- Adjust tyre pressure to the value specified for full load.
- Park vehicle in dry, well ventilated place. Engage first or reverse gear or set selector lever to **P**. Prevent the vehicle from rolling.
- Do not apply parking brake.

- Open bonnet, close all doors and lock the vehicle.
- Disconnect the clamp from the negative terminal of the vehicle battery. Beware that all systems are not functional, e.g. anti-theft alarm system.

Putting back into operation

Following must be done if the vehicle is putting back into operation:

- Connect the clamp to the negative terminal of the vehicle battery. Activate the electronics of the power windows.
- Check tyre pressure.
- Fill up the washer fluid reservoir.
- Check the engine oil level.
- Check the coolant level.
- Fit the number plate if necessary.

End-of-life vehicle recovery

Information on end-of-life vehicle recovery centres and the recycling of end-of-life vehicles is available on our website. Only entrust this work to an authorised recycling centre.

Natural gas vehicles must be recycled by a service centre authorised for natural gas vehicles.

Vehicle checks

Performing work

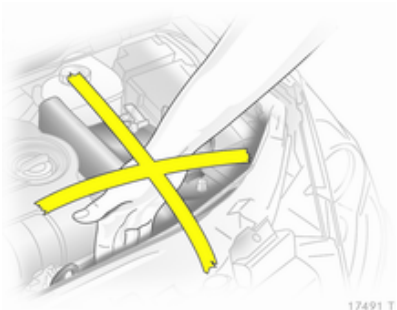

⚠ Warning

Only perform engine compartment checks when the ignition is off.

The cooling fan may start operating even if the ignition is off.

⚠ Danger

The ignition system and Xenon headlights use extremely high voltage. Do not touch.

The caps for topping up the engine oil, the coolant, the washing fluid and the oil dipstick handle are yellow for ease of identification.

Bonnet

Opening

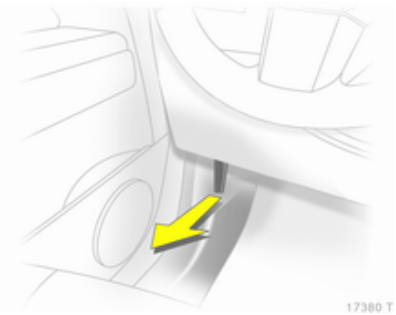

Pull the release lever and return it to its original position.

Lift the safety catch upwards and open the bonnet.

Air intake ⇨ 124.

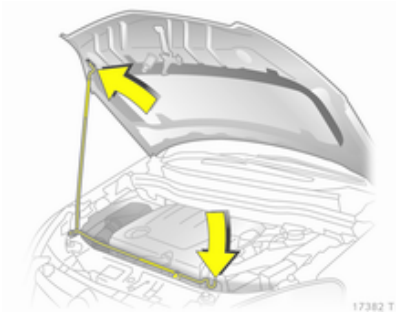

Secure the bonnet support.

Closing

Before closing the bonnet, press the support into the holder.

Lower the bonnet and allow it to drop into the catch. Check that the bonnet is engaged.

Engine oil

Check the engine oil level manually on a regular basis to prevent damage to the engine. Ensure that the correct specification of oil is used. Recommended fluids and lubricants ⇨ 194.

Check with the vehicle on a level surface. The engine must be at operating temperature and switched off for at least 5 minutes.

Pull out the dipstick, wipe it clean, insert it to the stop on the handle, pull out and read the engine oil level.

Insert dipstick to the stop on the handle and make half a turn.

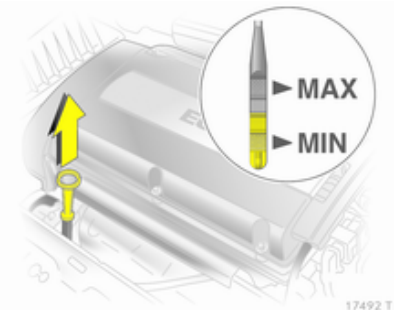

Different dipsticks are used depending on engine variant.

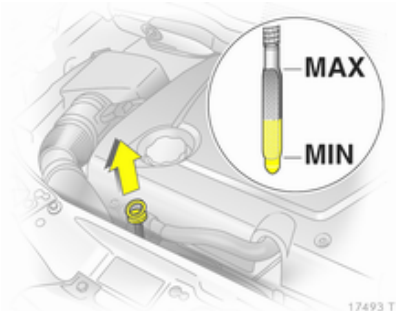

When the engine oil level has dropped to the **MIN** mark, top up engine oil.

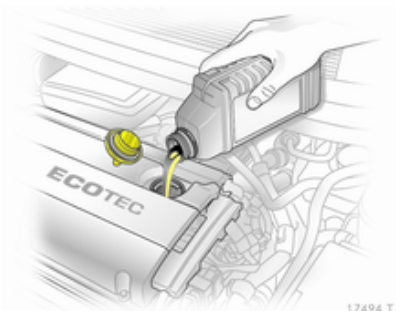

We recommend to use the same engine oil that is filled in.

The engine oil level must not exceed the **MAX** mark on the dipstick.

Caution
Overfilled engine oil must be drained or suctioned out.

Capacities ⇨ 210.

Fit the cap on straight and tighten it.

Engine coolant

The coolant provides freeze protection down to approx. -28 °C.

Caution
Only use approved antifreeze.

Coolant level

Caution
Too low a coolant level can cause engine damage.

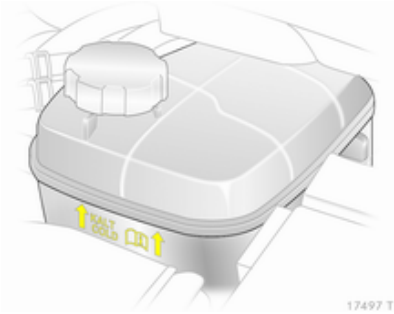

If the cooling system is cold, the coolant level should be just above the **KALT/COLD** mark. Top up if the level is low.

⚠ Warning

Allow the engine to cool before opening the cap. Carefully open the cap, relieving the pressure slowly.

Top up with antifreeze. If no antifreeze is available, use clean tap water or distilled water. Install the cap tightly. Have the antifreeze concentration checked and have the cause of the coolant loss remedied by a workshop.

Washer fluid

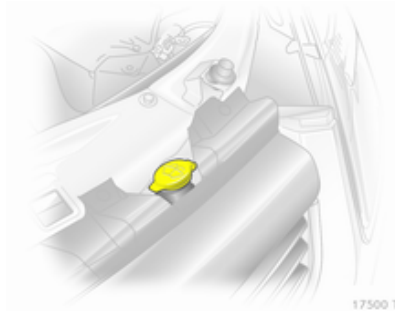

Fill with clean water mixed with a suitable quantity of windscreen washer fluid which contains antifreeze. For the correct mixing ratio refer to the washer fluid container.

Caution

Only washer fluid with a sufficient antifreeze concentration provides protection at low temperatures or a sudden drop in temperature.

Brakes

A squealing noise indicates that the brake lining is at its minimum thickness. Continued driving is possible but have the brake lining replaced as soon as possible.

Once new brake linings are installed, do not brake unnecessarily hard for the first few journeys.

Brake fluid

⚠ Warning

Brake fluid is poisonous and corrosive. Avoid contact with eyes, skin, fabrics and painted surfaces.

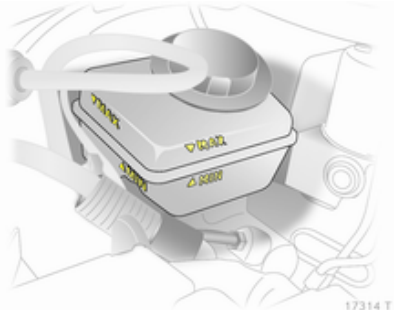

The brake fluid level must be between the **MIN** and the **MAX** marks.

When topping up, ensure maximum cleanliness as contamination of the brake fluid can lead to brake system malfunctions. Have the cause of the loss of brake fluid remedied by a workshop.

Only use high-performance brake fluid approved for the vehicle, Brake and clutch fluid ⇨ 157.

Battery

The vehicle battery is maintenance-free provided that the driving profile allows sufficient charging of the battery. Short distance driving and frequent engine starts can discharge the battery. Avoid the use of unnecessary electrical consumers.

Batteries do not belong in household waste. They must be disposed of at an appropriate recycling collection point.

Laying up the vehicle for more than 4 weeks can lead to battery discharge. Disconnect the clamp from the negative terminal of the vehicle battery.

Ensure the ignition is switched off before connecting or disconnecting the vehicle battery.

Battery discharge protection ⇨ 116.

Warning label

Meaning of symbols:

- No sparks, naked flames or smoking.
- Always shield eyes. Explosive gases can cause blindness or injury.
- Keep the battery out of reach of children.
- The battery contains sulfuric acid which could cause blindness or serious burn injuries.

- See the Owner's Manual for further information.
- Explosive gas may be present in the vicinity of the battery.

Diesel fuel system bleeding

If the tank has been run dry, the diesel fuel system must be bled. Switch on the ignition three times for 15 seconds at a time. Then crank the engine for a maximum of 40 seconds. Repeat this process after no less than 5 seconds. If the engine fails to start, seek the assistance of a workshop.

Wiper blade replacement

Service setting for front windscreen wipers

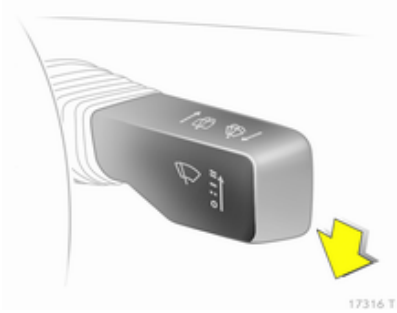

Switch off the ignition but do not remove ignition key or open driver's door.

Within 4 seconds, push the wiper lever down and release as soon as the wipers are vertical.

Wiper blades on the windscreen

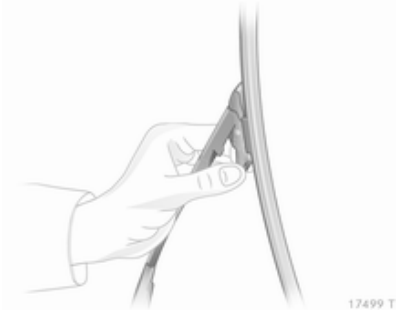

Lift the wiper arm, press the two catches on the arm, disengage the wiper blade and remove.

Wiper blade on the rear window

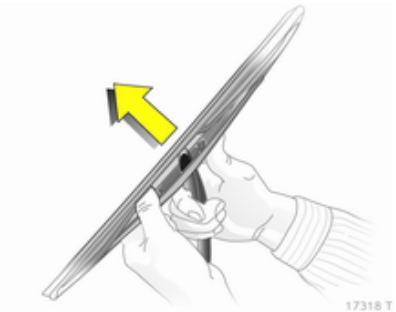

Lift wiper arm. Disengage wiper blade as shown in illustration and remove.

Bulb replacement

Switch off the ignition and switch off the relevant switch or close the doors.

Only hold a new bulb at the base! Do not touch the bulb glass with bare hands.

Use only the same bulb type for replacement.

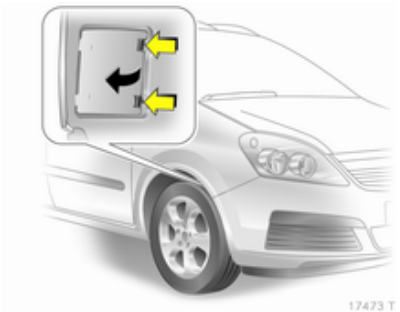

The bulbs of the front outer lights are replaced through openings in the front wheel housing: turn wheels in a way that allows access, release catch and remove cover.

To replace bulbs on the right side of the engine compartment, detach the air hose from the air filter. On the left side, detach the plug to the fuse box.

Halogen headlights

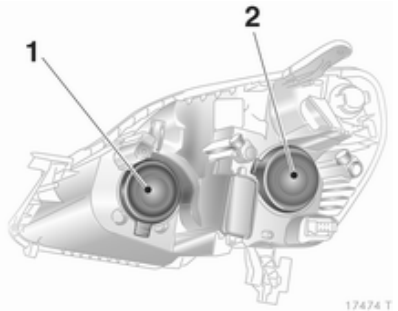

Headlights have separate systems for high beam **1** (inner bulbs) and low beam **2** (outer bulbs).

Low beam

1. Replace bulbs through the opening in the wheel housing.

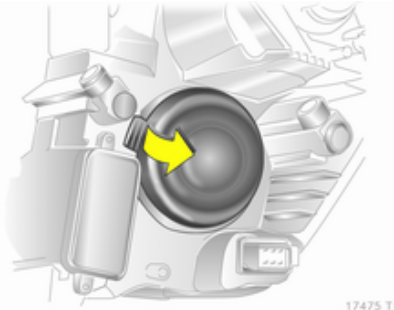

2. Remove protective cover **2**.

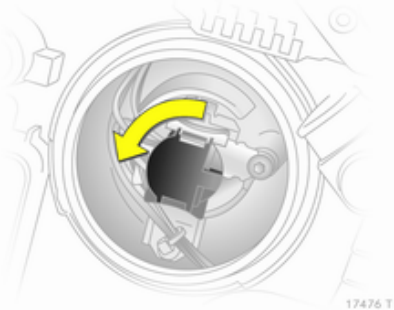

3. Rotate bulb holder anti-clockwise to disengage. Withdraw the bulb holder from the reflector.

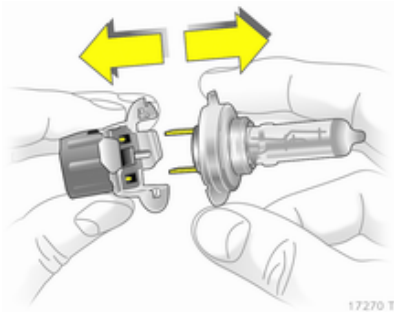

4. Detach bulb from bulb holder and renew the bulb.
5. Insert the bulb holder, engaging the two lugs into the reflector and rotate clockwise to secure.
6. Rotate bulb carrier to right as far as it will go.
7. Install protective cover.
8. Close the opening in the wheel housing with the cover.

High beam

1. Access to the bulbs is through the engine compartment.

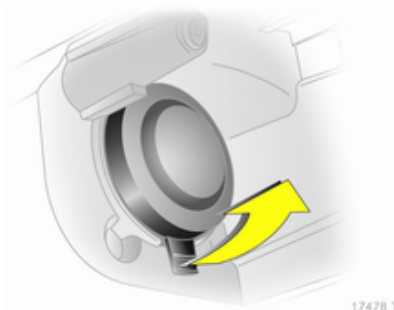

2. Remove protective cover **1**.
3. Detach wiring plug from bulb.

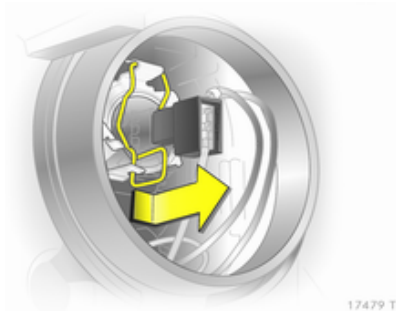

4. Disengage spring clip from retainer by pressing forward and then swing downwards.
5. Withdraw bulb from reflector housing.
6. When installing the new bulb, insert lugs in the reflector recesses and engage the spring clip.
7. Install the wiring plug onto bulb.
8. Install protective cover.

Side lights

1. Access to the bulbs is through the engine compartment.

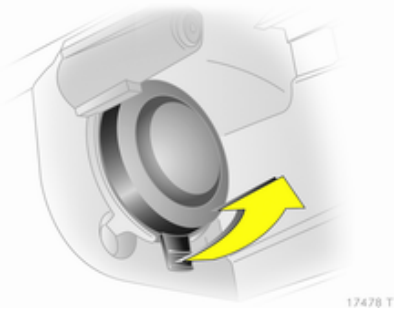

2. Remove protective cover **1**.

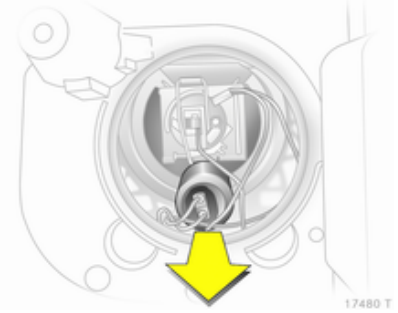

3. Withdraw parking light bulb holder from reflector.

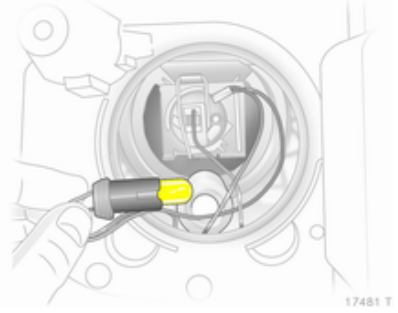

4. Remove bulb from socket and renew bulb.
5. Insert holder in reflector. Install the headlamp protective cover.

Front turn signal

1. Replace bulbs through the opening in the wheel housing.

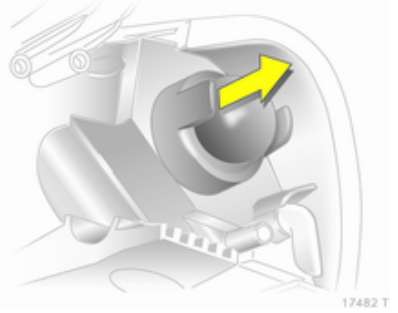

2. Remove protective cover.

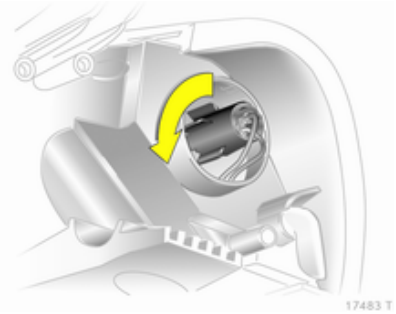

3. Rotate bulb holder anti-clockwise to disengage.
4. Push bulb into socket slightly, rotate anti-clockwise, remove and renew bulb.
5. Insert bulb holder in reflector, rotate clockwise to engage.
6. Install protective cover.
7. Close the opening in the wheel housing with the cover.

Xenon headlights

⚠ Danger

Xenon headlights work under extremely high electrical voltage. Do not touch. Except for the turn signal bulbs, bulbs should be replaced by a workshop.

Front turn signal

1. Access to the bulbs is through the engine compartment.

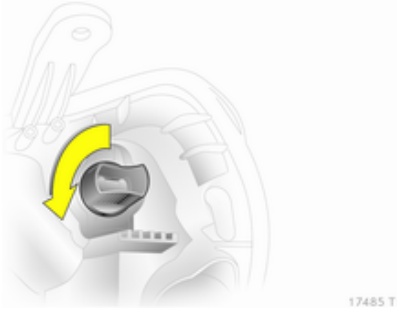

2. Rotate bulb holder anti-clockwise to disengage.

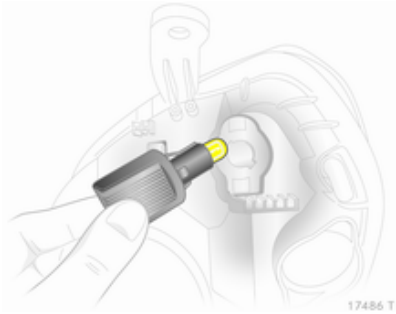

3. Push bulb into socket slightly, rotate anti-clockwise, remove and renew bulb.
4. Insert bulb holder in reflector, rotate clockwise to engage.

Fog lights

Have bulbs replaced by a workshop.

Tail lights

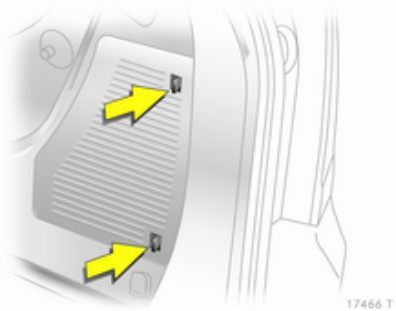

To change the bulbs on the right side, open the side cover: push locking tabs forwards and remove cover.

Remove insert with tyre repair kit.

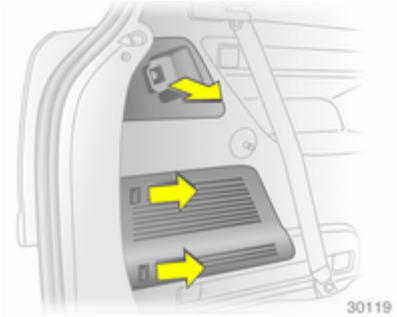

To change the bulbs on the left side, take off the retainer of the load compartment cover and open the side cover: push locking tabs forwards and remove cover.

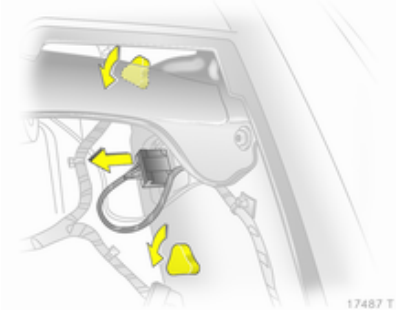

1. Compress wiring plug and pull from bulb holder.
2. Unscrew two plastic securing nuts from the inside by hand.

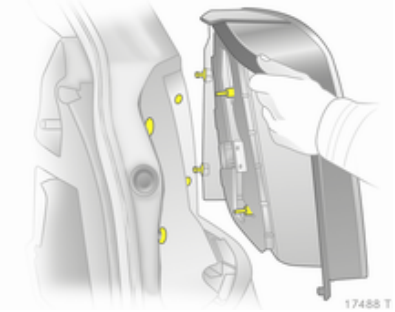

3. Remove tail light assembly.

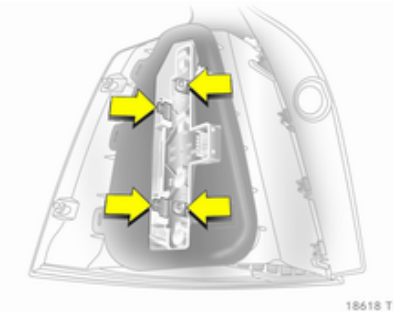

4. Disengage locking tabs and remove bulb holder.

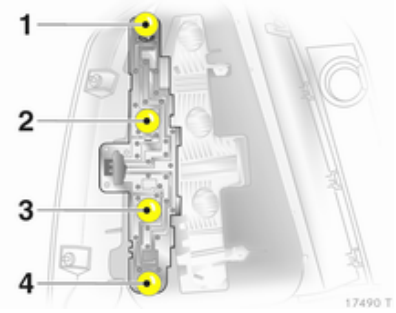

5. Push bulb into socket slightly, rotate anti-clockwise, remove and renew bulb.

   Tail light/brake light (**1**)

   Turn signal light (**2**)

   Rear fog light, may be only on one side (**3**)

   Reverse light (**4**)

6. Engage bulb holder into the tail light assembly. Connect wiring plug. Install tail light assembly in body and tighten securing nuts. On the right side, fit the insert with tyre repair kit. Engage side cover. On the left side engage retainer of the load compartment cover.

7. After bulb replacement, check the tail lights for proper functionality: switch on the ignition, operate the brake, switch on the sidelights.

Side turn signal lights

Have bulbs replaced by a workshop.

Number plate light

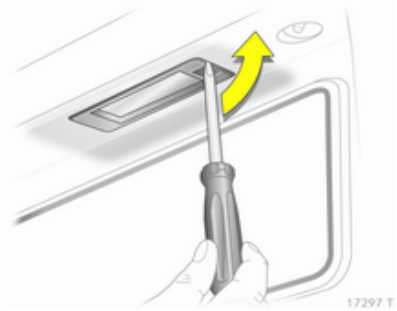

1. Insert screwdriver in bulb housing, press to the side and release spring.

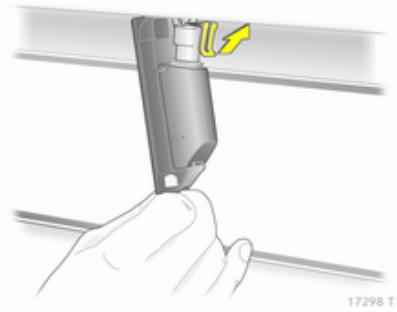

2. Remove bulb housing downwards, taking care not to pull on the cable.
3. Lift flap and disconnect wiring plug from bulb holder.

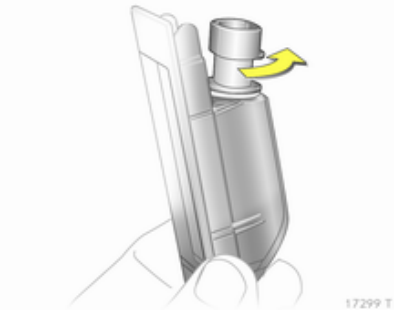

4. Rotate bulb holder anti-clockwise to disengage.
5. Remove bulb from holder and renew bulb.
6. Insert bulb holder in bulb housing and rotate clockwise.
7. Connect wiring plug to bulb holder.
8. Insert and engage bulb housing.

Interior lights

Front courtesy light, reading lights

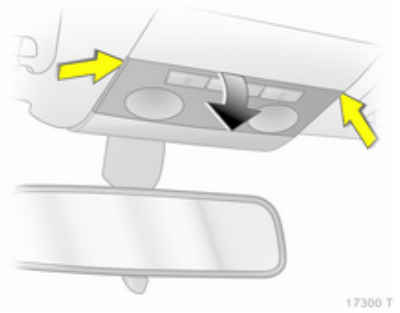

1. Disengage lens, press it downward slightly and remove at a downward angle.
2. Remove bulb and renew.
3. Engage lens.

Rear courtesy light and reading lights

Have bulbs replaced by a workshop.

Glovebox light, foot well light

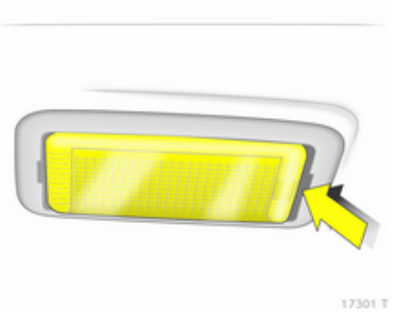

1. Prise the lamp out with a screwdriver.

2. Press bulb slightly towards spring clip and remove.
3. Insert new bulb.
4. Install lamp.

Instrument panel illumination

Have bulbs replaced by a workshop.

Electrical system

Fuses

Data on the replacement fuse must match the data on the defective fuse.

The vehicle has two fuse boxes: one behind a cover on the left side of the load compartment and one in the front left of the engine compartment.

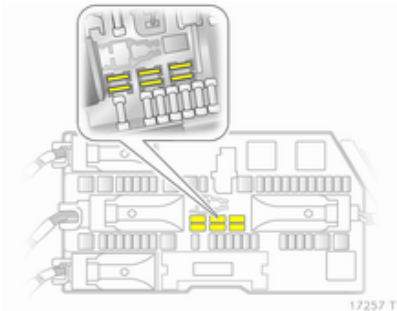

Store spare fuses in the load compartment fuse box version B. Open the cover ⇨ 171.

Before replacing a fuse, turn off the respective switch and the ignition.

A blown fuse can be recognised by its melted wire. Do not replace the fuse until the cause of the fault has been remedied.

Some functions are protected by several fuses.

Fuses may also be inserted without existence of a function.

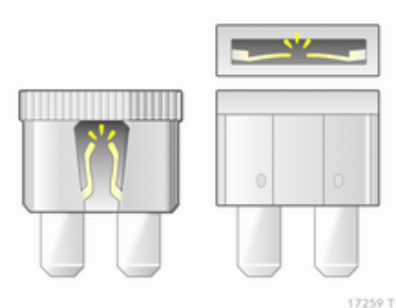

Fuse extractor

A fuse extractor may be located in the fuse box in the load compartment.

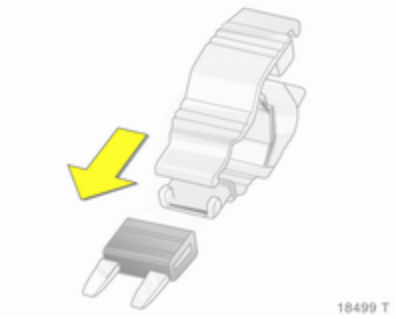

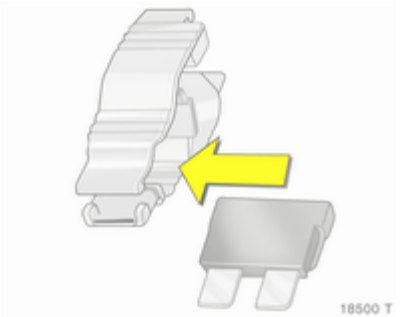

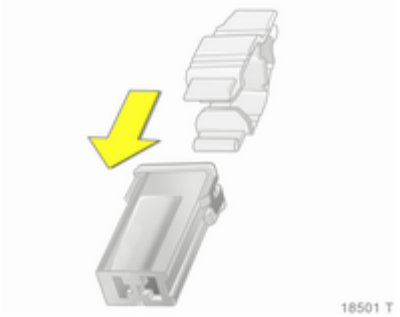

Place the fuse extractor on the various types of fuse from the top or side, and withdraw fuse.

Engine compartment fuse box

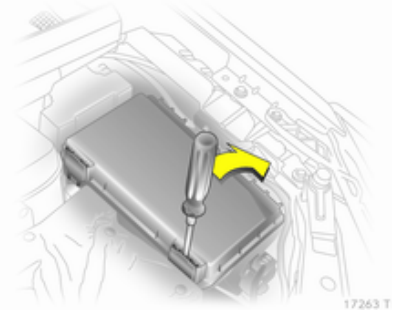

Insert a screwdriver into the opening as far as it will go and tilt it sideways. Open the cover upwards and remove.

When refitting the cover, first attach the cover on the left side and then fold down. Take care that the cover engages audibly.

The fuse box has two different fuse assignments depending on the load compartment fuse box variant, ⇨ 171.

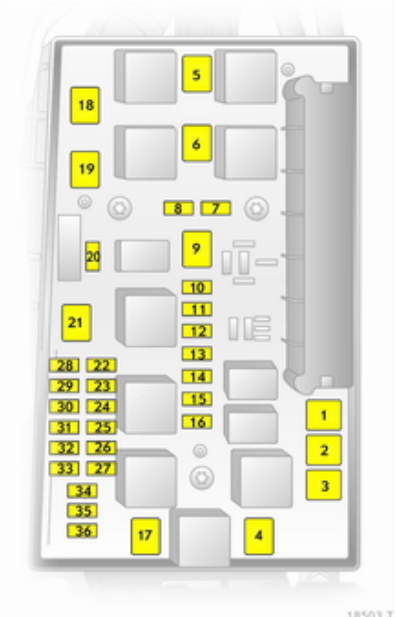

Fuse assignments in conjunction with load compartment fuse box version A

No.	Circuit
1	ABS
2	ABS
3	Interior fan electronic climate control
4	Interior fan heating and air conditioning system
5	Radiator fan
6	Radiator fan
7	Central locking system
8	Windscreen washer, rear window washer
9	Heated rear window, heated exterior mirror
10	Diagnostics plug
11	Instruments
12	Mobile telephone, Infotainment system, display
13	Courtesy light
14	Windscreen wiper
15	Windscreen wiper
16	Horn, ABS, brake light switch, air conditioning system
17	Diesel fuel filter or air conditioning system
18	Starter
19	–
20	Horn
21	Engine electronics
22	Engine electronics
23	Headlight range adjustment
24	Fuel pump
25	–
26	Engine electronics

No.	Circuit
27	Heating, air conditioning system, air quality sensor
28	–
29	Power steering
30	Engine electronics
31	Rear window wiper
32	Brake light switch
33	Headlight range adjustment, light switch, clutch switch, instrument, driver's door module
34	Steering column control unit
35	Infotainment system
36	Cigarette lighter, front power outlet

Fuse assignments in conjunction with load compartment fuse box version B

No.	Circuit
1	ABS
2	ABS
3	Interior fan electronic climate control
4	Interior fan heating and air conditioning system
5	Radiator fan
6	Radiator fan
7	Windscreen washer system
8	Horn
9	Headlight washer system
10	Emergency unlocking of central locking system
11	–
12	–
13	Fog light
14	Windscreen wiper
15	Windscreen wiper
16	Control module electronics, Open&Start system, ABS, brake light switch
17	Diesel fuel filter heating
18	Starter
19	Transmission electronics
20	Air conditioning system
21	Engine electronics
22	Engine electronics
23	Adaptive forward lighting, head-light range adjustment
24	Fuel pump
25	Transmission electronics
26	Engine electronics
27	Power steering

No.	Circuit
28	Transmission electronics
29	Transmission electronics
30	Engine electronics
31	Adaptive forward fighting, head-light range adjustment
32	Brake system, air conditioning system, clutch switch
33	Adaptive forward lighting, head-light range adjustment, light switch
34	Steering column control unit
35	Infotainment system
36	Mobile telephone, Infotainment system, display

Load compartment fuse box

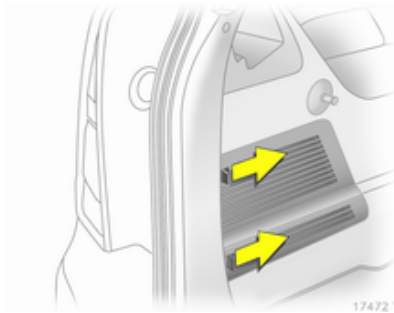

The fuse box is behind a cover. Press the locking tabs forward and remove the cover.

Do not store any objects behind the cover.

Depending on the equipment, there are two different fuse boxes.

Fuse box version A

To replace a fuse, remove the relevant protective cap.

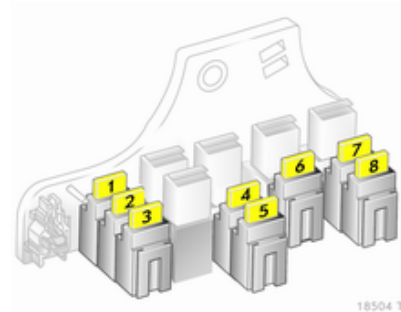

No.	Circuit
1	Fog light
2	Rear power outlet
3	Load compartment power outlet
4	Reversing lights
5	Rear power windows
6	Air conditioning system
7	Front power windows
8	Heated exterior mirrors

Fuse box version B

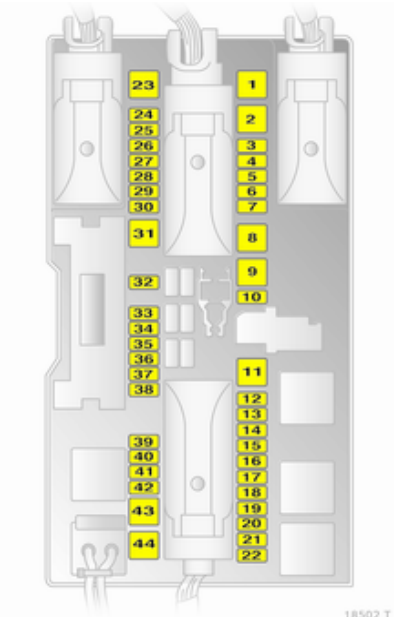

No.	Circuit
1	Front power windows
2	-
3	Instruments
4	Heating, air conditioning system, electronic climate control
5	Airbags
6	–
7	–
8	–
9	–
10	–
11	Heated rear window
12	Rear window wiper
13	Parking assist
14	Heating, air conditioning system
15	–

No.	Circuit
16	Seat occupancy recognition, Open&Start system
17	Rain sensor, air quality sensor, tyre pressure monitoring system, interior mirror
18	Instruments, switches
19	–
20	CDC
21	Heated exterior mirrors
22	–
23	Rear power windows
24	Diagnostics plug
25	–
26	Electrical foldable exterior mirrors
27	Ultrasonic sensor, anti-theft alarm system
28	–

No.	Circuit
29	Cigarette lighter, front power outlet
30	Rear power outlet
31	–
32	–
33	Open&Start system
34	–
35	Rear power outlet
36	Socket for towing equipment
37	–
38	Central locking system, terminal 30
39	Left seat heating
40	Right seat heating
41	–
42	–

No.	Circuit
43	–
44	–

Vehicle tools

Tools

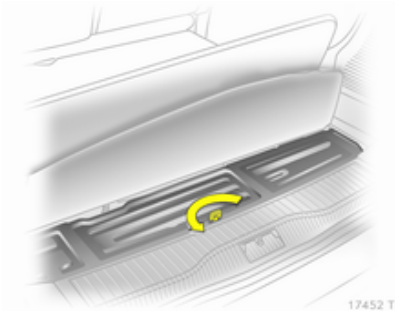

To open the cover, lift the carpeting. Raise, rotate and lift the ring.

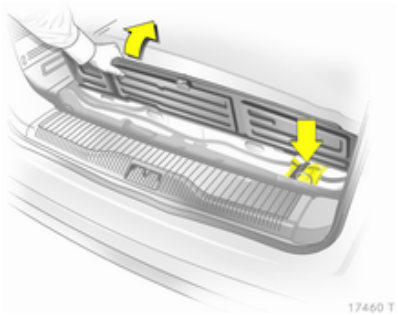

The jack and the vehicle tools are in a pouch, secured to the stowage compartment in the floor of the load compartment with a rubber strap.

To close the lid, insert the lugs on its front rim into the recesses and lock into place.

Wheels and tyres

Tyre condition, wheel condition

Drive over edges slowly and at right angles if possible. Driving over sharp edges can cause tyre and wheel damage. Do not trap tyres on the kerb when parking.

Regularly check the wheels for damage. Seek the assistance of a workshop in the event of damage or unusual wear.

Tyres

Tyres of size 225/45 R 17 are only permitted if the vehicle is equipped with electronic stability program.

Winter tyres

Winter tyres improve driving safety at temperatures below 7 °C and should therefore be fitted on all wheels.

Tyres of size 195/65 R 15, 195/60 R 16, 205/55 R 16 and 225/45 R 17 can be used as winter tyres.

Tyres of size 205/50 R 17 must only be used as winter tyres.

Tyres of size 225/40 R 18[1)], 225/40 ZR 18 and 235/35 R 19 must not be used as winter tyres.

Winter tyres may only be used on the Zafira OPC on special alloy wheels approved by Opel.

Run-flat winter tyres may only be used on factory approved alloy wheels.

In accordance with country-specific regulations, affix the speed sticker in the driver's field of view.

Run-flat tyres

Run-flat tyres have reinforced, self-supporting sidewalls, which ensure that the tyres always have a certain amount of driveability, even when there is no pressure.

[1)] Zafira OPC: Permitted as winter tyres without tyre chains.

Run-flat tyres are only permitted on vehicles with electronic stability program and tyre pressure monitoring system or deflation detection system.

Caution
Check tyre pressures regularly even if run-flat tyres are fitted.

Depending on tyre manufacturer, run-flat tyres can be identified from a marking on the tyre wall. E.g.

ROF = RunonFlat for Goodyear or

SSR = Self Supporting Runflat Tyre for Continental.

Use of run-flat tyres is only permitted in combination with factory approved alloy wheels.

Do not use a tyre repair kit.

The ECO tyre pressure must not be used.

Run-flat tyres must not be combined with standard tyres.

If converting to standard tyres, note that the vehicle is not equipped with a spare wheel or tyre repair kit.

Driving with a damaged tyre

A loss in tyre pressure is indicated by the tyre pressure monitoring system or the deflation detection system.

If a tyre has no pressure, continued driving is possible

- at a speed of max. 80 km/h
- up to a distance of 80 km

⚠Warning
The vehicle will be more difficult to steer and handle. Braking distance will be longer. Adapt driving style and speed to the changed conditions.

Tyre designations

E.g. **195/65 R 15 91 H**

195 = Tyre width, mm
65 = Cross-section ratio (tyre height to tyre width), %
R = Belt type: Radial
RF = Type: RunFlat
15 = Wheel diameter, inches
91 = Load index e.g. 91 is equivalent to 618 kg
H = Speed code letter

Speed code letter:

Q = up to 160 km/h
S = up to 180 km/h
T = up to 190 km/h
H = up to 210 km/h
V = up to 240 km/h
W = up to 270 km/h

Tyre pressure

Check the pressure of cold tyres at least every 14 days and before any long journey. Do not forget the spare wheel. This also applies to vehicles with tyre pressure monitoring.

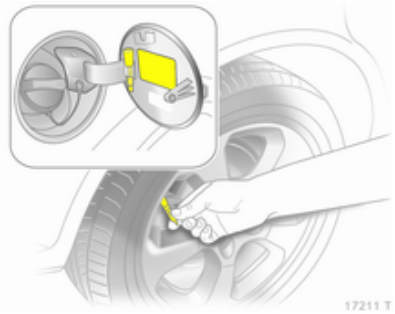

Remove the valve cap key from the fuel filler flap and use it to unscrew the valve cap.

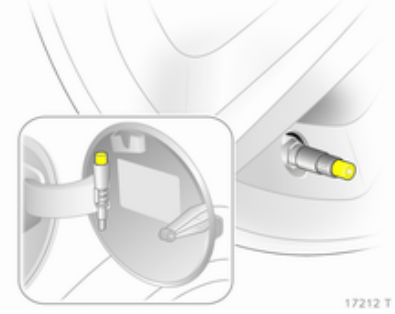

On vehicles with tyre pressure monitoring system, screw the adapter to the valve.

Tyre pressure ⇨ 211 and on the label on the inside of the fuel filler flap.

The tyre pressure data refer to cold tyres. It applies to summer and winter tyres.

Always inflate the spare wheel to the pressure specified for full load.

The ECO tyre pressure serves to achieve the smallest amount of fuel consumption possible. It must not be used with run-flat tyres.

Incorrect tyre pressures will impair safety, vehicle handling, comfort and fuel economy and will increase tyre wear.

⚠ Warning

If the pressure is too low, this can result in considerable tyre warm-up and internal damage, leading to tread separation and even to tyre blow-out at high speeds.

Tyre pressure monitoring system

The tyre pressure monitoring system continually checks the pressure of all four wheels when vehicle speed exceeds a certain limit.

All wheels must be equipped with pressure sensors and the tyres must have the prescribed pressure. Otherwise, the tyre pressure will be monitored by the deflation detection system ⇨ 177.

The current tyre pressures can be shown in the Info-Display ⇨ 108.

Vehicle messages, tyre pressure ⇨ 103.

Control indicator (!) ⇨ 91.

If a complete set of wheels without sensors is mounted (e.g. four winter tyres), no error message will be displayed. The tyre pressure monitoring system is not operational. Retrofitting of sensors is possible.

The use of commercially available liquid tyre repair kits can impair the function of the system. Factory approved repair kits can be used.

External high-power radio equipment could disrupt the tyre pressure monitoring system.

System initialisation

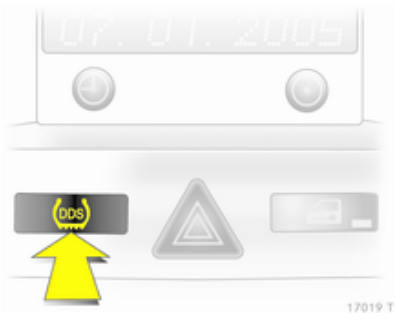

After a wheel change, the system must be initialised: inflate the tyres to the prescribed pressure, switch on the ignition, press and hold the **DDS** button for approx. 4 seconds, control indicator (!) flashes three times.

Tyre deflation detection system

The tyre deflation detection system continually checks the rotation speed of all four tyres.

If a tyre loses pressure the control indicator (!) illuminates red. Stop immediately and check tyre pressure.

Control indicator (!) ⇨ 91.

System initialisation

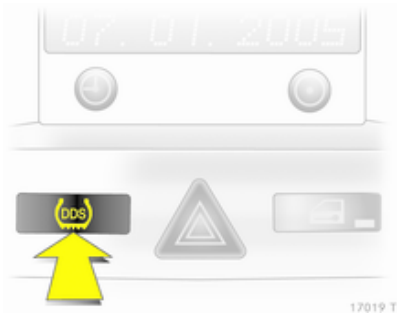

After tyre pressure correction or wheel change, the system must be initialised: Switch on the ignition, press and hold the **DDS** button for approx. 4 seconds, control indicator (!) flashes three times.

Tread depth

Check tread depth at regular intervals.

Tyres should be replaced for safety reasons at a tread depth of 2-3 mm (4 mm for winter tyres).

The legally permissible minimum tread depth (1.6 mm) has been reached when the tread has worn down as far as one of the tread wear

indicators (TWI). Their position is indicated by markings on the sidewall.

If there is more wear at the front than the rear, swap round front wheels and rear wheels periodically.

Tyres age, even if they are not used. We recommend tyre replacement every 6 years.

Changing tyre and wheel size

If tyres of a different size than those fitted at the factory are used, it may be necessary to reprogram the speedometer and make other vehicle modifications.

After converting to a different tyre size, have the label with tyre pressures replaced.

⚠ Warning

Use of unsuitable tyres or wheels may lead to accidents and will invalidate the vehicle type approval.

Wheel covers

Wheel covers and tyres that are factory approved for the respective vehicle and comply with all of the relevant wheel and tyre combination requirements must be used.

If the wheel covers and tyres used are not factory approved, the tyres must not have a rim protection ridge.

Wheel covers must not impair brake cooling.

Remove the wheel covers if tyre chains are to be installed.

⚠ Warning

Use of unsuitable tyres or wheel covers could lead to sudden pressure loss and thereby accidents.

Tyre chains

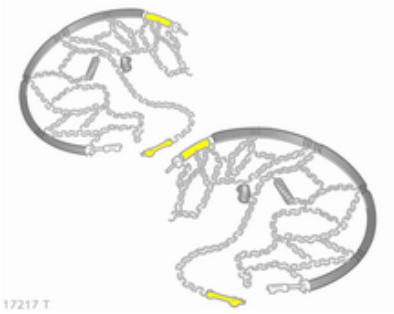

Tyre chains are only permitted on the front wheels.

Always use fine mesh chains that add no more than 10 mm to the tyre tread and the inboard sides (including chain lock).

⚠ Warning

Damage may lead to tyre blowout.

Tyre chains are permitted on tyres of size 195/65 R 15, 195/60 R 16, 205/55 R16, 205/50 R 17 and 225/45 R17.

Tyre chains are not permitted on tyres of size 225/40 R 18, 225/40 ZR 18 and 235/35 R 19.

The use of tyre chains is not permitted on the temporary spare wheel.

Tyre repair kit

Minor damage to the tyre tread can be repaired with the tyre repair kit.

Do not remove foreign bodies from the tyres.

Tyre damage exceeding 4 mm or that is near the rim cannot be repaired with the tyre repair kit.

⚠ Warning

Do not drive faster than 80 km/h.

Do not use for a lengthy period.

Steering and handling may be affected.

If you have a flat tyre:

Apply parking brake and engage first gear, reverse gear or **P**.

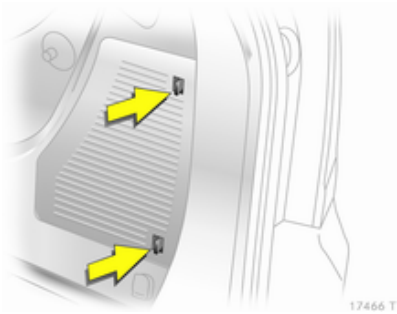

The tyre repair kit is in the stowage compartment in the load compartment.

Push the locking tabs forward and remove the cover.

1. Take the sealant bottle and bracket with air hose from the insert.

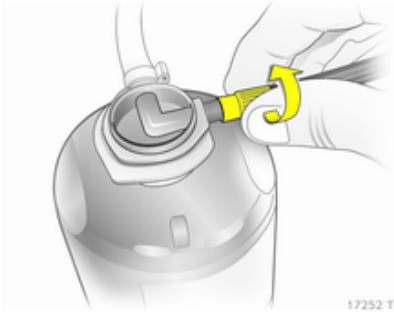

2. Detach air hose from bracket and screw onto sealant bottle connection.

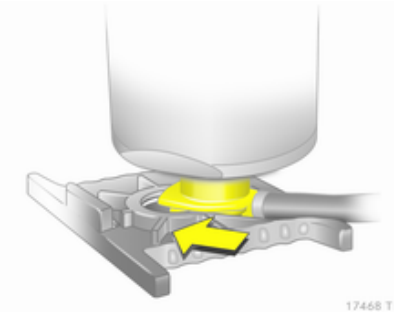

3. Position the sealant bottle on the bracket. Make sure that the bottle does not fall.

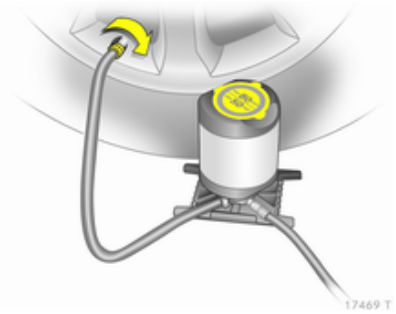

4. Unscrew valve cap from defective tyre.
5. Screw tyre inflation hose to valve.

6. Screw air hose onto compressor connection.
7. Open cover of electrical connection from the left and pull out the plug.

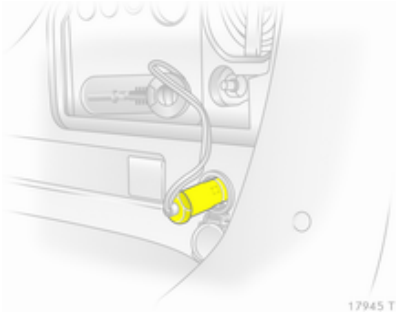

8. Open the rear power outlet and insert plug of tyre repair kit.

   To avoid discharging the battery, we recommend running the engine.

9. Switch on the compressor by pressing the on/off switch. The tyre is filled with sealant.
10. The compressor pressure gauge briefly indicates up to 6 bar whilst the sealant bottle is emptying (approx. 30 seconds). Then the pressure starts to drop.
11. All of the sealant is pumped into the tyre. Then the tyre is inflated.
12. The prescribed tyre pressure should be obtained within 10 minutes. Tyre pressure ⇨ 211. When the correct pressure is obtained, switch off the compressor by pressing the on/off switch again.

    If the prescribed tyre pressure is not obtained within 10 minutes, remove the tyre repair kit. Move the vehicle one tyre rotation. Reattach the tyre repair kit and continue the filling procedure for 10 minutes. If the prescribed tyre pressure is still not obtained, the tyre is too badly damaged. Seek the assistance of a workshop.

    Release excess tyre pressure using the ━ button.

    Do not run the compressor longer than 10 minutes.
13. Disconnect plug from power outlet, place in plug compartment and remove tyre repair kit. Push catch on bracket to remove sealant bottle from bracket. Screw tyre inflation hose to the free connection of sealant bottle. This prevents sealant from escaping. Stow tyre repair kit in load compartment.
14. Remove any excess sealant using a cloth.
15. Take the label indicating maximum permitted speed from the sealant bottle and affix in the driver's field of view.
16. Continue driving immediately so that sealant is evenly distributed in the tyre. After driving approx. 10 km (but no more than 10 minutes), stop and check tyre pressure. Screw compressor air hose directly onto tyre valve and compressor when doing this.

    If tyre pressure is more than 1.3 bar, set it to the correct value. Repeat the procedure until there is no more loss of pressure.

    If the tyre pressure has fallen below 1.3 bar, the vehicle must not be used. Seek the assistance of a workshop.
17. Stow away tyre repair kit in load compartment.

Note

The driving characteristics of the repaired tyre is severely affected, therefore have this tyre replaced.

If unusual noise is heard or the compressor becomes hot, turn compressor off for at least 30 minutes.

The built-in safety valve opens at a pressure of 7 bar.

Note the expiry date of the kit. After this date its sealing capability is no longer guaranteed. Pay attention to storage information on sealant bottle.

Replace the used sealant bottle. Dispose of the bottle as prescribed by applicable laws.

The compressor and sealant can be used from approx. -30 °C.

The adapters supplied can be used to pump up other items e.g. footballs, air mattresses, inflatable dinghies etc. They are located on the underside of the compressor. To remove, screw on compressor air hose and withdraw adapter.

Wheel changing

Some vehicles are equipped with a tyre repair kit instead of a spare wheel ⇨ 179.

Make the following preparations and observe the following information:

- Park the vehicle on a level, firm and non-skid surface. The front wheels must be in the straight-ahead position.
- Apply the parking brake and engage first gear, reverse gear or **P**.
- Remove the spare wheel ⇨ 184.
- Never change more than one wheel at once.
- Use the jack only to change wheels in case of puncture, not for seasonal winter or summer tyre change.
- If the ground on which the vehicle is standing is soft, a solid board (max. 1 cm thick) should be placed under the jack.
- No people or animals may be in the vehicle when it is jacked-up.
- Never crawl under a jacked-up vehicle.
- Do not start the vehicle when it is raised on the jack.
- Before screwing in the wheel bolts, clean them and lightly coat the taper of each wheel bolt with commercially available grease.

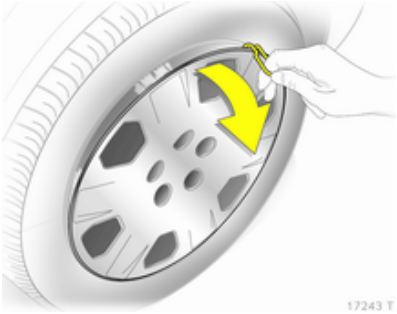

1. Pull off the wheel cover with the hook. Vehicle tools ⇨ 173.

   For wheel covers with visible wheel bolts: The cover can remain on the wheel. Do not remove the retaining rings on the wheel bolts.

   Alloy wheels: Disengage wheel bolt caps with a screwdriver and remove. To protect the wheel, place a soft cloth between the screwdriver and the alloy wheel.

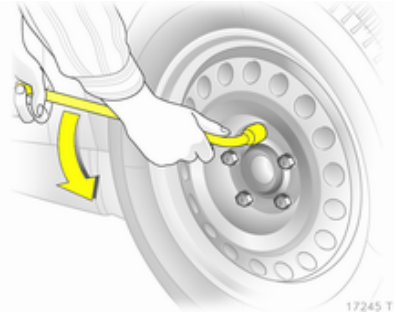

2. Install the wheel wrench ensuring that it locates securely and slacken each bolt by half a turn.

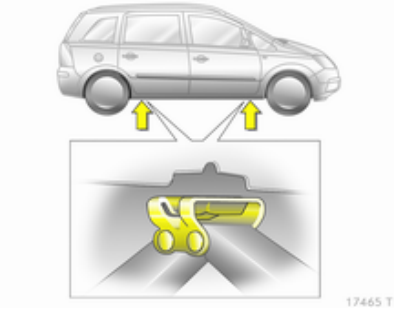

3. Ensure the jack is positioned correctly with the vehicle jacking points.

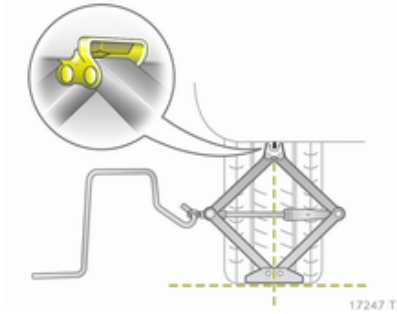

4. Set the jack to the necessary height. Position it directly below the jacking point in a manner that prevents it from slipping.

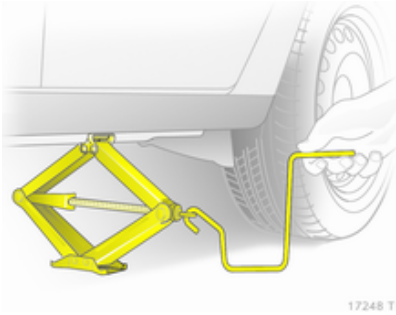

Attach jack handle and with the jack correctly aligned rotate handle until wheel is clear of the ground.

5. Unscrew the wheel bolts.
6. Change the wheel.
7. Screw in the wheel bolts.
8. Lower vehicle.
9. Install the wheel wrench ensuring that it locates securely and tighten each bolt in a crosswise sequence. Tightening torque is 110 Nm.
10. Align the valve hole in the wheel cover with the tyre valve before installing.

Install wheel bolt caps.

11. Stow the replaced wheel ⇨ 179 and the vehicle tools ⇨ 173.
12. Check the tyre pressure of the installed tyre and also the wheel bolt torque as soon as possible.

Have the defective tyre renewed or repaired.

Spare wheel

The spare wheel can be classified as a temporary spare wheel depending on the size compared to the other mounted wheels and country regulations.

The spare wheel has a steel rim.

Use of a spare wheel that is smaller than the other wheels or together with winter tyres could affect driveability. Have the defective tyre replaced as soon as possible.

The spare wheel is kept beneath the vehicle.

1. Open the stowage in the load compartment ⇨ 173.
2. Fully release the hexagon bolt in the stowage compartment using the wheel wrench.
3. Lift the spare wheel holder.
4. Unhook the catch and lower the spare wheel.

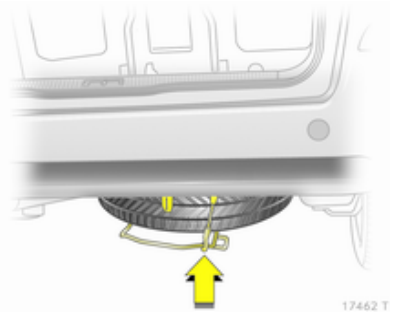

5. Detach the safety cable.
6. Lower holder all the way and remove spare wheel.
7. Change the wheel.
8. Place replaced wheel in spare wheel holder with outside of wheel facing upwards. Wheels only up to 16 inches can be placed.

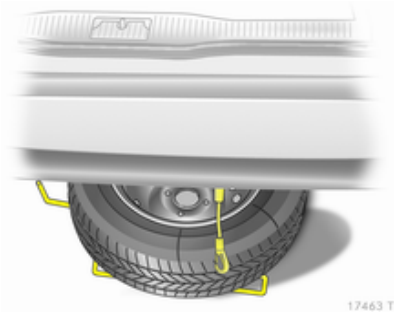

9. Lift the spare wheel holder, insert the safety cable.
10. Lift the spare wheel holder and engage in the catch. The open side of the catch must point in the direction of travel.

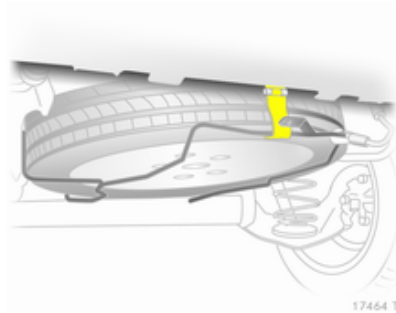

11. Turn the hexagon bolt clockwise in the stowage compartment using the wheel wrench.
12. Close and lock stowage compartment cover.

Temporary spare wheel

Use of the temporary spare wheel could affect driveability. Have the defective tyre renewed or repaired as soon as possible.

Only mount one temporary spare wheel. Do not drive faster than 80 km/h. Take curves slowly. Do not use for a long period of time.

The use of the temporary spare wheel on the rear axle is not permitted while towing another vehicle. Therefore mount the temporary spare wheel on the front axle and a full-size tyre on the rear axle.

Tyre chains ⇨ 178.

Directional tyres

Fit directional tyres such that they roll in the direction of travel. The rolling direction is indicated by a symbol (e.g. an arrow) on the sidewall.

The following applies to tyres fitted opposing the rolling direction:

- Driveability may be affected. Have the defective tyre renewed or repaired as soon as possible.
- Drive particularly carefully on wet and snow-covered road surfaces.

Jump starting

Do not start with quick charger.

A vehicle with a discharged battery can be started using jump leads and the battery of another vehicle.

⚠Warning

Be extremely careful when starting with jump leads. Any deviation from the following instructions can lead to injuries or damage caused by battery explosion or damage to the electrical systems of both vehicles.

⚠Warning

Avoid contact of the battery with eyes, skin, fabrics and painted surfaces. The fluid contains sulphuric acid which can cause injuries and damage in the event of direct contact.

- Never expose the battery to naked flames or sparks.
- A discharged battery can already freeze at temperatures of 0 °C. Defrost the frozen battery before connecting jump leads.
- Wear eye protection and protective clothing when handling a battery.
- Use a booster battery with the same voltage (12 Volts). Its capacity (Ah) must not be much less than that of the discharged battery.
- Use jump leads with insulated terminals and a cross section of at least 16 mm^2 (25 mm^2 for diesel engines).
- Do not disconnect the discharged battery from the vehicle.
- Switch off all unnecessary electrical consumers.
- Do not lean over the battery during jump starting.
- Do not allow the terminals of one lead to touch those of the other lead.
- The vehicles must not come into contact with each other during the jump starting process.
- Apply the parking brake, transmission in neutral, automatic transmission in **P**.

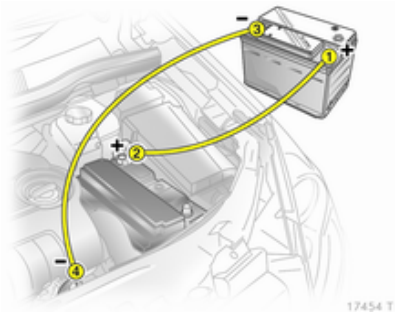

Lead connection order:

1. Connect the red lead to the positive terminal of the booster battery.
2. Connect the other end of the red lead to the positive terminal of the discharged battery.

3. Connect the black lead to the negative terminal of the booster battery.
4. Connect the other end of the black lead to a vehicle grounding point, such as the engine block or an engine mounting bolt. Connect as far away from the discharged battery as possible, however at least 60 cm.

Route the leads so that they cannot catch on rotating parts in the engine compartment.

To start the engine:

1. Start the engine of the vehicle providing the jump.
2. After 5 minutes, start the other engine. Start attempts should be made for no longer than 15 seconds at an interval of 1 minute.
3. Allow both engines to idle for approx. 3 minutes with the leads connected.
4. Switch on electrical consumers (e.g. headlights, heated rear window) of the vehicle receiving the jump start.
5. Reverse above sequence exactly when removing leads.

Towing

Towing the vehicle

Version with cover strip: Disengage strip at bottom, slide to side and remove.

Version with cover cap: Disengage cap at bottom and remove downwards.

The towing eye is stowed with the vehicle tools ⇨ 173.

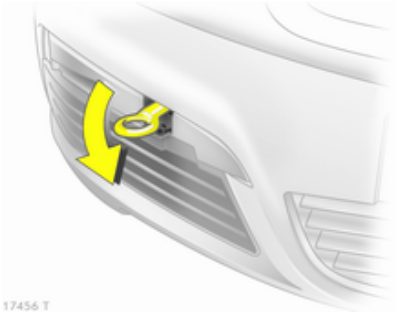

Screw in the towing eye as far as it will go until it stops in a horizontal position.

Attach a tow rope – or better still a tow rod – to the towing eye.

The towing eye must only be used for towing and not recovering the vehicle.

Switch on ignition to release steering wheel lock and to permit operation of brake lamps, horn and windscreen wiper.

Open&Start system ⇨ 29.

Transmission in neutral.

Switch on the hazard warning flashers on both vehicles.

Caution
Drive slowly. Do not drive jerkily. Excessive tractive force can damage the vehicle.

When the engine is not running, considerably more force is needed to brake and steer.

To prevent the entry of exhaust gases from the towing vehicle, switch on the air recirculation and close the windows.

Vehicles with automatic transmission must be towed facing forwards, not faster than 80 km/h nor further than 100 km. In all other cases and when the transmission is defective, the front axle must be raised off the ground.

Seek the assistance of a workshop.

Manual transmission automated ⇨ 135.

After towing, unscrew the towing eye and refit the cover.

Towing another vehicle

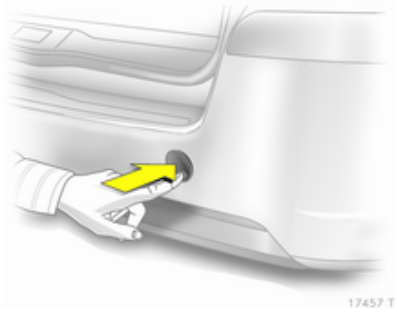

Disengage cap at bottom and remove downwards.

The towing eye is stowed with the vehicle tools ⇨ 173.

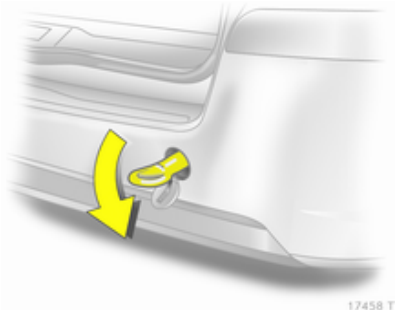

Screw in the towing eye as far as it will go until it stops in a horizontal position.

The lashing eye at the rear underneath the vehicle must never be used as a towing eye.

Attach a tow rope – or better still a tow rod – to the towing eye.

The towing eye must only be used for towing and not recovering a vehicle.

Caution
Drive slowly. Do not drive jerkily. Excessive tractive force can damage the vehicle.

After towing, unscrew the towing eye and refit the cover.

Appearance care

Exterior care

Locks

The locks are lubricated at the factory using a high quality lock cylinder grease. Use de-icing agent only when absolutely necessary, as this has a degreasing effect and impairs lock function. After using de-icing agent, have the locks regreased by a workshop.

Washing

The paintwork of your vehicle is exposed to environmental influences. Wash and wax your vehicle regularly. When using automatic car washes, select a programme that includes waxing.

Bird droppings, dead insects, resin, pollen and the like should be cleaned off immediately, as they contain aggressive constituents which can cause paint damage.

If using a car wash, comply with the car wash manufacturer's instructions. The windscreen wipers and rear window wiper must be switched off. Remove antenna and external accessories such as roof racks etc.

If you wash your vehicle by hand, make sure that the insides of the wheel housings are also thoroughly rinsed out.

Clean edges and folds on opened doors and the bonnet as well as the areas they cover.

Caution
Always use a cleaning agent with a pH value of 4 to 9. Do not use cleaning agents on hot surfaces.

Have the door hinges of all doors greased by a workshop.

Do not clean the engine compartment with a steam-jet or high-pressure jet cleaner.

Thoroughly rinse and leather-off the vehicle. Rinse leather frequently. Use separate leathers for painted and glass surfaces: remnants of wax on the windows will impair vision.

Do not use hard objects to remove spots of tar. Use tar removal spray on painted surfaces.

Exterior lights

Headlight and other light covers are made of plastic. Do not use any abrasive or caustic agents, do not use an ice scraper, and do not clean them dry.

Polishing and waxing

Wax the vehicle regularly (at the latest when water no longer beads). Otherwise, the paintwork will dry out.

Polishing is necessary only if the paint has become dull or if solid deposits have become attached to it.

Paintwork polish with silicone forms a protective film, making waxing unnecessary.

Plastic body parts must not be treated with wax or polishing agents.

Windows and windscreen wiper blades

Use a soft lint-free cloth or chamois leather together with window cleaner and insect remover.

When cleaning the rear window, make sure the heating element inside is not damaged.

For mechanical removal of ice, use a sharp-edged ice scraper. Press the scraper firmly against the glass so that no dirt can get under it and scratch the glass.

Clean smearing wiper blades with a soft cloth and window cleaner.

Moonroof

Never clean with solvents or abrasive agents, fuels, aggressive media (e.g. paint cleaner, acetone-containing solutions etc.), acidic or highly alkaline media or abrasive pads. Do not apply wax or polishing agents to the middle part of the moonroof.

Wheels and tyres

Do not use high-pressure jet cleaners.

Clean rims with a pH-neutral wheel cleaner.

Rims are painted and can be treated with the same agents as the body.

Paintwork damage

Rectify minor paintwork damage with a touch-up pen before rust forms. Have more extensive damage or rust areas repaired by a workshop.

Underbody

Some areas of the vehicle underbody have a PVC undercoating while other critical areas have a durable protective wax coating.

After the underbody is washed, check the underbody and have it waxed if necessary.

Bitumen/rubber materials could damage the PVC coating. Have underbody work carried out by a workshop.

Before and after winter, wash the underbody and have the protective wax coating checked.

Engine compartment

Areas of the engine compartment that are painted in the same colour as the vehicle must be looked after like any other painted surface.

It is advisable to wash the engine compartment before and after winter and preserve it with wax. Protect the alternator and brake fluid reservoir with plastic sheets before washing the engine.

When washing the engine with a steam-jet cleaner, do not direct the steam jet towards components of the antilock brake system, air conditioning system or the belt drive and its components.

After an engine wash, have all engine room components preserved thoroughly by a workshop using protective wax.

Do not use high-pressure jet cleaners.

Natural gas system

Do not direct the steam jet or high-pressure jet towards natural gas system components. It is particularly important to protect the natural gas tank and the pressure valves on the vehicle underbody and the bulkhead in the engine compartment.

These components must not be treated using chemical cleaners or preservatives.

Have components of the natural gas system cleaned by a workshop authorised to carry out maintenance of natural gas vehicles.

Towing equipment

Do not clean the coupling ball bar with a steam-jet or high-pressure jet cleaner.

Interior care

Interior and upholstery

Only clean the vehicle interior, including the instrument panel fascia and panelling, with a dry cloth or interior cleaner.

Clean the leather upholstery with clear water and a soft cloth. In case of heavy soiling, use leather care.

The instrument panel should only be cleaned using a soft damp cloth.

Clean fabric upholstery with a vacuum cleaner and brush. Remove stains with an upholstery cleaner.

Clothing fabrics may not be colourfast. This could cause visible discolourations, especially on light-coloured upholstery. Removable stains and discolourations should be cleaned as soon as possible.

Clean seat belts with lukewarm water or interior cleaner.

Caution
Close Velcro fasteners as open Velcro fasteners on clothing could damage seat upholstery.

Plastic and rubber parts

Plastic and rubber parts can be cleaned with the same cleaner as used to clean the body. Use interior cleaner if necessary. Do not use any other agent. Avoid solvents and petrol in particular. Do not use high-pressure jet cleaners.

Service and maintenance

General information 193
Recommended fluids, lubricants and parts 194

General information

Service information

In order to ensure economical and safe vehicle operation and to maintain the value of your vehicle, it is of vital importance that all maintenance work is carried out at the proper intervals as specified.

The detailed, up-to-date service schedule for your vehicle is available at the workshop.

European service intervals

Maintenance of your vehicle is required every 30000 km or 1 year, whichever occurs first.

The European schedule is valid for the following countries:

Andorra, Austria, Belgium, Bosnia-Herzegovina, Bulgaria, Croatia, Cyprus, Czech Republic, Denmark, Estonia, Finland, France, Germany, Greece, Greenland, Hungary, Iceland, Ireland, Israel, Italy, Latvia, Lithuania, Luxembourg, Macedonia, Malta, Montenegro, Netherlands, Norway, Poland, Portugal, Romania, Slovakia, Slovenia, Spain, Sweden, Switzerland, United Kingdom.

International service intervals

Maintenance of your vehicle is required every 15000 km or 1 year, whichever occurs first.

The international service intervals are valid for the countries which are not listed at the european service intervals.

Confirmations

Confirmation of service is recorded in the Service and Warranty Booklet. The date and mileage is completed with the stamp and signature of the servicing workshop.

Make sure that the Service and Warranty Booklet is completed correctly as continuous proof of service is essential if any warranty or goodwill claims are to be met, and is also a benefit when selling the vehicle.

Fixed service interval

When service is due, **InSP** appears in the service display for approx. 10 seconds when the ignition is switched on. Have the next service performed by a workshop within one week or 500 km (whichever occurs first).

Flexible service interval

The service interval is based on several parameters depending on usage and is calculated using these parameters.

If the remaining distance is less than 1500 km, **InSP** is displayed with a remaining distance of 1000 km when the ignition is switched on and off. If less than 1000 km remain, **InSP** is displayed for several seconds. Have the next service performed by a workshop within one week or 500 km (whichever occurs first).

Display of remaining distance:

1. Switch off ignition.
2. Briefly press the trip odometer reset button. The odometer reading is shown.
3. Press and hold the reset button for about 2 seconds. **InSP** and the remaining distance are displayed.

Recommended fluids, lubricants and parts

Recommended fluids and lubricants

Only use products that meet the recommended specifications. Damage resulting from the use of products not in line with these specifiations will not be covered by the warranty.

⚠ Warning

Operating materials are hazardous and could be poisonous. Handle with care. Pay attention to information given on the containers.

Engine oil

Engine oil is identified by its quality and its viscosity. Quality is more important than viscosity when selecting which engine oil to use. The oil quality ensures e.g. engine cleanliness, wear protection and oil

aging control, whereas viscosity grade gives information on the oil's thickness over a temperature range.

Dexos is the newest engine oil quality that provides optimum protection for gasoline and diesel engines. If it is unavailable, engine oils of other listed qualities have to be used. Recommendations for gasoline engines are also valid for Compressed Natural Gas (CNG), Liquified Petroleum Gas (LPG) and Ethanol (E85) fueled engines.

Select the appropriate engine oil based on its quality and on the minimum ambient temperature ⇨ 199.

Topping up engine oil

Engine oils of different manufacturers and brands can be mixed as long as they comply with the required engine oil quality and viscosity.

Use of engine oil with only ACEA A1/B1 or only A5/B5 quality is prohibited, since it can cause long-term engine damage under certain operating conditions.

Select the appropriate engine oil based on its quality and on the minimum ambient temperature ⇨ 199.

Additional engine oil additives

The use of additional engine oil additives could cause damage and invalidate the warranty.

Engine oil viscosity grades

The SAE viscosity grade gives information of the thickness of the oil.

Multigrade oil is indicated by two figures, e.g. SAE 5W-30. The first figure, followed by a W, indicates the low temperature viscosity and the second figure the high temperature viscosity.

Select the appropriate viscosity grade depending on the minimum ambient temperature ⇨ 199.

All of the recommended viscosity grades are suitable for high ambient temperatures.

Coolant and antifreeze

Use only silicate-free long life coolant (LLC) antifreeze.

The system is factory filled with coolant designed for excellent corrosion protection and frost protection down to approx. -28 °C. This concentration should be maintained all year round. The use of additional coolant additives that intend to give additional corrosion protection or seal against minor leaks can cause function problems. Liability for consequences resulting from the use of additional coolant additives will be rejected.

Brake and clutch fluid

Only use high-performance brake fluid approved for the vehicle, consult your workshop.

Over time, brake fluid absorbs moisture which will reduce braking effectiveness. The brake fluid should therefore be replaced at the specified interval.

Brake fluid should be stored in a sealed container to avoid water absorption.

Ensure brake fluid does not become contaminated.

Technical data

Vehicle identification 197
Vehicle data 199

Vehicle identification

Vehicle Identification Number

The Vehicle Identification Number is stamped on the identification plate and on the floor pan, under the floor covering, visible under a cover.

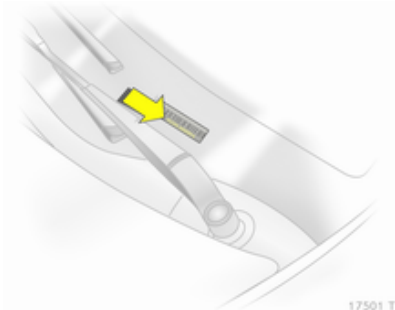

The Vehicle Identification Number may be embossed on the instrument panel visible through the windscreen.

Identification plate

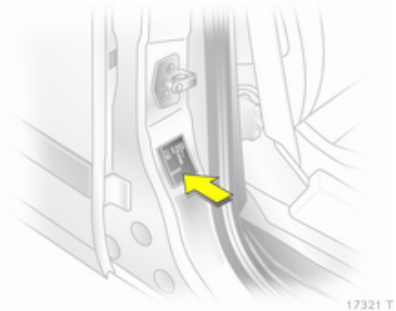

The identification plate is located on the front right door frame.

Information on identification plate:

1 = Manufacturer
2 = Type approval number
3 = Vehicle Identification Number
4 = Permissible gross vehicle weight rating in kg
5 = Permissible gross train weight in kg
6 = Maximum permissible front axle load in kg
7 = Maximum permissible rear axle load in kg
8 = Vehicle-specific or country-specific data

The combined total of front and rear axle loads must not exceed the permissible gross vehicle weight. For example, if the front axle is bearing its maximum permissible load, the rear axle can only bear a load that is equal to the gross vehicle weight minus the front axle load.

The technical data is determined in accordance with European Community standards. We reserve the right to make modifications.

Specifications in the vehicle documents always have priority over those given in this manual.

Vehicle data
Recommended fluids and lubricants

European service schedule

Required engine oil quality

	All European countries (except Belarus, Moldova, Russia, Serbia, Turkey)		Only Israel	
Engine oil quality	Petrol engines (including CNG, LPG, E85)	Diesel engines	Petrol engines (including CNG, LPG, E85)	Diesel engines
dexos 1	–	–	✓	–
dexos 2	✓	✓	–	✓

In case dexos quality is unavailable you may use max. 1 litre engine oil quality ACEA C3 once between each oil change.

Engine oil viscosity grades

	All European countries and Israel (except Belarus, Moldova, Russia, Serbia, Turkey)
Ambient temperature	Petrol and diesel engines
down to -25 °C	SAE 5W-30 or SAE 5W-40
below -25 °C	SAE 0W-30 or SAE 0W-40

International service schedule

Required engine oil quality

	All countries outside Europe except Israel		Only Belarus, Moldova, Russia, Serbia, Turkey	
Engine oil quality	Petrol engines (including CNG, LPG, E85)	Diesel engines	Petrol engines (including CNG, LPG, E85)	Diesel engines
dexos 1	✓	–	–	–
dexos 2	–	✓	✓	✓

In case dexos quality is unavailable you may use the oil qualities listed below:

	All countries outside Europe except Israel		Only Belarus, Moldova, Russia, Serbia, Turkey	
Engine oil quality	Petrol engines (including CNG, LPG, E85)	Diesel engines	Petrol engines (including CNG, LPG, E85)	Diesel engines
GM-LL-A-025	✓	–	✓	–
GM-LL-B-025	–	✓	–	✓

	All countries outside Europe except Israel		Only Belarus, Moldova, Russia, Serbia, Turkey	
Engine oil quality	Petrol engines (including CNG, LPG, E85)	Diesel engines	Petrol engines (including CNG, LPG, E85)	Diesel engines
ACEA A3/B3	✓	–	✓	–
ACEA A3/B4	✓	✓	✓	✓
ACEA C3	✓	✓	✓	✓
API SM	✓	–	✓	–
API SN resource conserving	✓	–	✓	–

Engine oil viscosity grades

	All countries outside Europe (except Israel), including Belarus, Moldova, Russia, Serbia, Turkey
Ambient temperature	Petrol and diesel engines
down to -25 °C	SAE 5W-30 or SAE 5W-40
below -25 °C	SAE 0W-30 or SAE 0W-40
down to -20 °C	SAE 10W-30[1)] or SAE 10W-40[1)]

[1)] Permitted, but usage of SAE 5W-30 or SAE 5W-40 with dexos quality is recommended.

Engine data

Sales designation	1.6	1.6	1.6 CNG	1.6 CNG
Engine identifier code	Z 16 XER, A 16 XER	Z 16 XE1	Z 16 XNT, A 16 XNT	Z 16 YNG
Number of cylinders	4	4	4	4
Piston displacement [cm^3]	1598	1598	1598	1598
Engine power [kW]	85	77	110	69
at rpm	6000	6000	5000	6200
Torque [Nm]	155	150	210	133
at rpm	4000	3900	2300 - 5000	4200
Fuel type	Petrol	Petrol	Natural gas/petrol	Natural gas/petrol
Octane rating RON				
recommended	**95**	**95**	**95**	**95**
possible	98	98	98	98
possible	91	91	–	–
Oil consumption [l/1000 km]	0.6	0.6	0.6	0.6

Sales designation	1.8	2.0 Turbo	2.0 Turbo	2.2
Engine identifier code	Z 18 XER, A 18 XER	Z 20 LER	Z 20 LEH	Z 22 YH
Number of cylinders	4	4	4	4
Piston displacement [cm^3]	1796	1998	1998	2198
Engine power [kW]	103	147	177	110
at rpm	6300	5400	5600	5600
Torque [Nm]	175	262	320	215
at rpm	3800	4200	2400-5000	4000
Fuel type	Petrol	Petrol	Petrol	Petrol
Octane rating RON				
recommended	**95**	**95**	**98**	**95**
possible	98	98	95	98
possible	91	91	91[2)]	–
Oil consumption [l/1000 km]	0.6	0.6	0.6	0.6

[2)] Possible only if high engine load, full load or driving in mountainous terrain with a caravan/trailer or high payload is avoided.

Sales designation	1.7	1.7	1.7	1.9 CDTI	1.9 CDTI	1.9 CDTI
Engine identifier code	A 17 DTJ	A 17 DTR	Z 17 DTJ	Z 19 DTL	Z 19 DT	Z 19 DTH
Number of cylinders	4	4	4	4	4	4
Piston displacement [cm^3]	1686	1686	1686	1910	1910	1910
Engine power [kW]	81	92	81	74	88	110
at rpm	3800	4000	3800	3500	3500	4000
Torque [Nm]	260	280	260	260	280	320
at rpm	2300	2300	2300	1700-2500	2000-2750	2000-2750
Fuel type	Diesel	Diesel	Diesel	Diesel	Diesel	Diesel
Oil consumption [l/1000 km]	0.6	0.6	0.6	0.6	0.6	0.6

Performance

Engine	Z16XER, A16XER	Z16XE1	Z16XNT, A16XNT	Z16YNG
Maximum speed[3] [km/h]				
Manual transmission	185	177	200	165
Manual transmission automated	–	–	–	–
Automatic transmission	–	–	–	–

Engine	Z18XER, A18XER	Z20LER	Z20LEH	Z22YH
Maximum speed [km/h]				
Manual transmission	197	225	231	200
Manual transmission automated	197	–	–	–
Automatic transmission	–	–	–	190

[3] The maximum speed indicated is achievable at kerb weight (without driver) plus 200 kg payload. Optional equipment could reduce the specified maximum speed of the vehicle.

Engine	A17DTJ	A17DTR	Z17DTJ	Z19DTL	Z19DT	Z19DTH
Maximum speed [km/h]						
Manual transmission	179	189	180	174	186	202 / 204[4)]
Manual transmission automated	–	–	–	–	–	–
Automatic transmission	–	–	–	–	182	198

[4)] Version with reduced exhaust emission.

Vehicle weight

Kerb weight, basic model

Zafira	Engine	Manual transmission	Manual transmission automated	Automatic transmission
without/with air conditioning [kg]	Z16XER, A16XER, Z16XE1	1505/1520	–/–	–/–
	Z16XNT, A16XNT	–/1735	–/–	–/–
	Z16YNG	1665/1680	–/–	–/–
	Z18XER, A18XER	1503/1518	1503/1518	–/–
	Z20LER	–/1610	–/–	–/–
	Z20LEH	–/1665	–/–	–/–
	Z22YH	1570/1585	–/–	1595/1610
	A17DTJ, A17DTR	1600/1615	–/–	–/–
	Z17DTJ	1600/1615	–/–	–/–
	Z19DTL, Z19DT	1613/1628	–/–	–/–
	Z19DT[5)]	–/–	–/–	1613/–
	Z19DTH	1613/1628	–/–	–/–
	Z19DTH	–/–	–/–	1613/–

[5)] Country-specific weight-reduced version

Additional weight

Engine	Z16XER, A16XER	Z16XE1	Z16XNT, A16XNT	Z16YNG	Z18XER, A18XER	Z20LER	Z20LEH
Edition/Enjoy [kg]	10	10	10	10	10	5	–
Cosmo [kg]	23	23	23	23	23	16	–
Sport [kg]	20	20	–	–	20	13	–

Engine	Z22YH	A17DTJ	A17DTR	Z17DTJ	Z19DTL	Z19DT	Z19DTH
Edition/Enjoy [kg]	5	5	5	5	5	5	5
Cosmo [kg]	16	16	16	16	16	16	16
Sport [kg]	13	13	13	13	13	13	13

Heavy accessories

Accessories	Moon roof	Towing equipment	Headlight washer system	Adaptive forward lighting
Weight [kg]	35	17	3	4

Vehicle dimensions

	Zafira	Zafira OPC
Length [mm]	4467	4503
Width without exterior mirrors [mm]	1801	1801
Width with two exterior mirrors [mm]	2025	2025
Height (without antenna) [mm]	1635	1635
Height with panorama roof (without antenna) [mm]	1670	1670
Length of load compartment floor [mm]	1088	1088
Load compartment width [mm]	1071	1071
Height of load compartment opening [mm]	895	895
Wheelbase [mm]	2703	2703
Turning circle diameter [m]	11.50	11.85

Capacities

Engine oil

Engine	Z16XE1 Z16XER A16XER Z18XER A18XER	Z16XNT A16XNT	Z16YNG	Z20LER	Z20LEH Z22YH	A17DTJ A17DTR	Z17DTJ	Z 19 DTL, Z19DT Z19DTH
including Filter [l]	4.5	4.5	3.5	4.25	5.0	5.4	5.4	4.3
between MIN and MAX [l]	1.0	1.0	1.0	1.0	1.0	1.0	1.0	1.0

Fuel tank

Petrol/diesel, nominal capacity [l]	56
Natural gas, nominal capacity [kg] or [l]	21 or 122
Petrol, nominal capacity [l]	14

Tyre pressures

Engine	Tyres	Comfort with up to 3 people		ECO with up to 3 people		With full load	
		front	rear	front	rear	front	rear
		[kPa/bar] (psi)	[kPa/bar] (psi)	[kPa/bar] (psi)	[kPa/bar] (psi)	[kPa/bar] (psi)	[kPa/bar] (psi)
Z16XER, A16XER Z16XE1	195/65 R 15, 205/55 R 16, 225/45 R 17	200/2.0 (29)	200/2.0 (29)	250/2.5 (36)	250/2.5 (36)	210/2.1 (30)	260/2.6 (38)
Z18XER A18XER	195/65 R 15, 205/55 R 16, 225/45 R 17	200/2.0 (29)	200/2.0 (29)	250/2.5 (36)	250/2.5 (36)	210/2.1 (30)	260/2.6 (38)
	225/40 R 18	220/2.2 (32)	220/2.2 (32)	–	–	230/2.3 (33)	280/2.8 (41)
Z16XNT A16XNT Z16YNG	205/55 R 16, 225/45 R 17[6)]	230/2.3 (33)	270/2.7 (39)	–	–	240/2.4 (35)	310/3.1 (45)
	205/55 R 16	210/2.1 (30)	250/2.5 (36)	260/2.6 (38)	260/2.6 (38)	230/2.3 (33)	310/3.1 (45)

6) Only for Z16XNT, A16XNT.

Engine	Tyres	Comfort with up to 3 people		ECO with up to 3 people		With full load	
		front	rear	front	rear	front	rear
		[kPa/bar] (psi)	[kPa/bar] (psi)	[kPa/bar] (psi)	[kPa/bar] (psi)	[kPa/bar] (psi)	[kPa/bar] (psi)
Z22YH	205/55 R 16, 225/45 R 17	220/2.2 (32)	200/2.0 (29)	260/2.6 (38)	260/2.6 (38)	240/2.4 (35)	290/2.9 (42)
	225/40 R 18	240/2.4 (35)	220/2.2 (32)	–	–	250/2.5 (36)	300/3.0 (43)
Z20LER	205/55 R 16, 225/45 R 17	250/2.5 (36)	230/2.3 (33)	–	–	260/2.6 (38)	310/3.1 (45)
	225/40 R 18	260/2.6 (38)	240/2.4 (35)	–	–	280/2.8 (41)	320/3.2 (46)
Z20LEH	205/50 R 17[7], 225/45 R 17 [8], 225/40 ZR 18, 235/35 ZR 19	250/2.5 (36)	230/2.3 (33)	–	–	270/2.7 (39)	320/3.2 (46)
	225/40 R 18[9]	260/2.6 (38)	240/2.4 (35)	–	–	280/2.8 (41)	320/3.2 (46)

[7] Only permitted as winter tyres.
[8] For a correct speed display reprogramme the speedometer.
[9] For Russia only.

Engine	Tyres	Comfort with up to 3 people		ECO with up to 3 people		With full load	
		front	rear	front	rear	front	rear
		[kPa/bar] (psi)	[kPa/bar] (psi)	[kPa/bar] (psi)	[kPa/bar] (psi)	[kPa/bar] (psi)	[kPa/bar] (psi)
A17DTJ, A17DTR	195/60 R 16	260/2.6 (38)	240/2.4 (35)	–	–	280/2.8 (41)	320/3.2 (46)
	205/55 R 16, 225/45 R 17	240/2.4 (35)	220/2.2 (32)	–	–	260/2.6 (38)	310/3.1 (45)
	225/40 R 18	250/2.5 (36)	230/2.3 (33)	–	–	270/2.7 (39)	310/3.1 (45)
Z17DTJ	195/60 R 16	260/2.6 (38)	240/2.4 (35)	300/3.0 (43)	300/3.0 (43)	280/2.8 (41)	320/3.2 (46)

Engine	Tyres	Comfort with up to 3 people		ECO with up to 3 people		With full load	
		front	rear	front	rear	front	rear
		[kPa/bar] (psi)	[kPa/bar] (psi)	[kPa/bar] (psi)	[kPa/bar] (psi)	[kPa/bar] (psi)	[kPa/bar] (psi)
Z19DTL, Z19DT, Z19DTH	195/60 R16	260/2.6 (38)	240/2.4 (35)	–	–	280/2.8 (41)	320/3.2 (46)
	205/55 R 16, 225/45 R 17	240/2.4 (35)	220/2.2 (32)	–	–	260/2.6 (38)	310/3.1 (45)
	205/55 R 16[10], 225/45 R 17	250/2.5 (36)	230/2.3 (33)	–	–	260/2.6 (38)	310/3.1 (45)
	225/40 R 18[11]	250/2.5 (36)	230/2.3 (33)	–	–	270/2.7 (39)	310/3.1 (45)
all	Temporary spare wheel	420/4.2 (61)	420/4.2 (61)	–	–	420/4.2 (61)	420/4.2 (61)

[10] Z19DTH with automatic transmission and moon roof.
[11] Not for Z19DTL.

Towing hitch installation dimensions

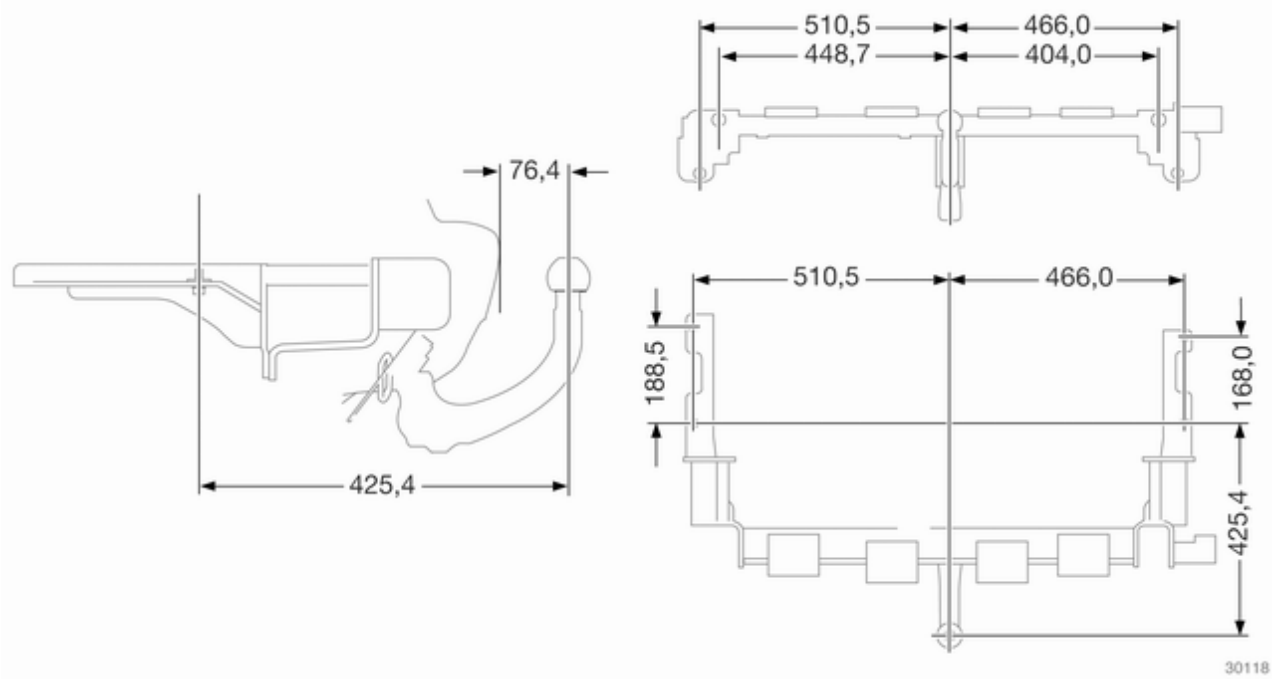

Customer information

Vehicle data recording and privacy 216

Vehicle data recording and privacy

Event data recorders

Data storage modules in the vehicle

A large number of electronic components of your vehicle contain data storage modules temporarily or permanently storing technical data about the condition of the vehicle, events and errors. In general, this technical information documents the condition of parts, modules, systems or the environment:

- Operating conditions of system components (e.g. filling levels)
- Status messages of the vehicle and its single components (e.g. number of wheel revolutions / rotational speed, deceleration, lateral acceleration)
- Dysfunctions and defects in important system components
- Vehicle reactions in particular driving situations (e.g. inflation of an airbag, activation of the stability regulation system)
- Environmental conditions (e.g. temperature)

These data are exclusively technical and help identifying and correcting errors as well as optimizing vehicle functions.

Motion profiles indicating travelled routes cannot be created with these data.

If services are used (e.g. repair works, service processes, warranty cases, quality assurance), employees of the service network (manufacturer included) are able to read out this technical information from the event and error data storage modules applying special diagnostic devices. If required, you will receive further information at these workshops. After an error has been corrected, the data are deleted from the error storage module or they are constantly overwritten.

When using the vehicle, situations may occur in which these technical data related to other information (accident report, damages on the vehicle, witness statements etc.) may be associated with a specific person - possibly, with the assistance of an expert.

Additional functions contractually agreed upon with the client (e.g. vehicle location in emergency cases) allow the transmission of particular vehicle data from the vehicle.

Radio Frequency Identification (RFID)

RFID technology is used in some vehicles for functions such as tyre pressure monitoring and ignition system security. It is also used in connection with conveniences such as radio remote controls for door locking/unlocking and starting, and in-vehicle transmitters for garage door openers. RFID technology in Opel vehicles does not use or record personal information or link with any other Opel system containing personal information.

Index

A

Accessories and vehicle modifications 153
Active head restraints..... 45
Active head restraints on front seats 23
Adaptive Forward Lighting .. 25, 93, 111
Adjustable air vents 123
Airbag and belt tensioners 88
Airbag system 58
Air conditioning regular operation 124
Air conditioning system 118
Air intake 124
Air vents..... 123
Antilock brake system 139
Antilock brake system (ABS) 90
Anti-theft alarm system 36, 103
Anti-theft locking system 36
Appearance care..... 189
Apply footbrake 93
Armrest 49
Ashtrays 82
Automatic anti-dazzle 40
Automatic climate control system 119
Automatic level control 142
Automatic light control 109
Automatic transmission 129
Auxiliary heater..... 123

B

Battery 158
Battery discharge protection 116
Battery voltage 102
Board-Info-Display 95
Bonnet 155
Brake and clutch fluid..... 194
Brake and clutch system 90
Brake assist 140
Brake fluid 157
Brake light switch 102
Brakes 139, 157
Breakdown..... 187
Bulb replacement 160

C

Capacities 210
Cargo management system 71
Car Pass 27
Catalytic converter 129
Central locking system 32
Centre console lighting 115
Changing tyre and wheel size ... 178
Charging system 89
Check control 23
Child locks 35

Child restraint installation locations 63
Child restraints..... 61
Child restraints with transponders 65
Child restraint systems 61
Cigarette lighter 82
Climate control 15
Climate control systems..... 117
Clock 80
Continuous damping control 142
Control indicators..... 85
Control of the vehicle 125
Controls..... 77
Convex shape 38
Coolant and antifreeze..... 194
Cruise control 94, 142
Cupholders 67
Curtain airbag system 60
Curve lighting..... 111

D

Danger, Warnings and Cautions . . . 4
Daytime running lights 111
Deflation detection system and tyre pressure monitoring system..... 91
Diesel fuel system bleeding 159
Diesel particle filter 26, 128
Door open 94
Doors..... 35
Drain diesel fuel filter 102
Driving characteristics and towing tips 148
Driving hints..... 125

E

Easytronic..... 135
Electric adjustment 38
Electrical system..... 167
Electronic climate control system 120
Electronic driving programmes 132, 136
Electronic Stability Program 91, 140
End-of-life vehicle recovery 154
Engine compartment fuse box ... 168
Engine coolant 156
Engine coolant temperature 91
Engine cooling level 102
Engine data 202
Engine exhaust 128
Engine oil 155, 194, 199
Engine oil pressure 92
Entry lighting 115
Event data recorders..... 216
Exit lighting 115
Exterior care 189
Exterior light 93
Exterior lighting 13, 109
Exterior mirrors..... 38

F

Fault 133, 137
First aid..... 74
First aid kit 74
Fixed air vents 124
FlexOrganizer 24
Fog light 94
Fog lights 163
Folding 39
Folding tray 74
Front airbag system 58
Front fog lights 112
Front seats..... 46
Fuel..... 145
Fuel consumption - CO_2-Emissions 147
Fuel for diesel engines 145
Fuel for natural gas operation . . . 145
Fuel for petrol engines 145
Fuel gauge 84
Fuel selector 85
Fuses 167

G

Gauges..... 83
General information 148

Glovebox 67
Graphic-Info-Display, Colour-Info-Display 97

H
Halogen headlights 160
Hand brake..... 139, 140
Hazard warning flashers 112
Headlight flash 110
Headlight range adjustment 110
Headlights..... 109
Headlights when driving abroad 110
Head restraint adjustment 8
Head restraints 44
Heated 39
Heated rear window 43
Heating 49
Heating and ventilation system . 117
High beam 93, 110
Hill start assist 140
Horn 14, 78

I
Identification plate 198
Ignition switch positions 126
Immobiliser 38
Indicators..... 83
Information displays..... 94
Instrument cluster 83
Instrument panel illumination 167
Instrument panel illumination control 114
Instrument panel overview 10
Interactive driving system..... 141
Interactive driving system, continuous damping control, sport mode..... 92
Interior care 191
Interior lighting..... 114
Interior lights 114, 166
Interior mirrors..... 40
Interruption of power supply 133, 138
Introduction 3
Isofix child restraint systems 65

J
Jump starting 186

K
Key, memorised settings..... 29
Keys 27
Keys, locks..... 27

L
Lashing eyes 70
Lighting 103
Lighting features..... 115
Light switch 109
Load compartment 35, 69
Load compartment cover 69
Load compartment fuse box 171
Loading information 75
Load rails and hooks 70
Low engine oil level 92
Low fuel 92

M
Malfunction indicator light 89
Manual anti-dazzle 40
Manual mode 131, 136
Manual transmission 134
Manual transmission automated 135
Manual windows 41
Memorised settings..... 29
Mirror adjustment 9
Misted light covers 113
Moonroof 43

N
Natural gas operation 25
New vehicle running-in 125
Number plate light 165

O
Object detection systems..... 143
Odometer 83
Oil, engine..... 194, 199
Open&Start system 29, 93

Outside temperature 80
Overrun cut-off 127

P
Parking 18, 127
Parking assist 143
Parking brake 140
Parking lights 113
Performance 205
Performing work 154
Pollen filter 124
Power outlets 81
Power windows 41
Preheating and diesel particle filter 91
Puncture..... 182

Q
Quickheat..... 123

R
Radio Frequency Identification (RFID)..... 217
Radio remote control 28
Reading lights 115
Rear floor storage cover 70
Rear fog light 94
Rear fog lights 113
Rear seats..... 50
Rear window wiper/washer 79
Recommended fluids and lubricants 194, 199
Refuelling 146
Reversing lights 113
Ride control systems..... 140
Roof..... 43
Roof panelling 68
Roof rack 74
Run-flat tyres 174

S
Safety net 72
Seat adjustment 7, 46
Seat belt 8
Seat belt reminder 88
Seat belts 54
Seat folding 49
Seat occupancy recognition . . 61, 88
Seat position 46
Seats in second row 20
Seats in third row 21
Second row seats 50
Selector lever 130, 135
Service 124, 193
Service display 85
Service information 193
Service vehicle soon 89
Side airbag system 59
Sidelights..... 109
Side turn signal lights 165
Spare wheel 184
Speedometer 83
Sport mode 24, 90, 141
Starting and operating..... 125
Starting off 17
Starting the engine 126, 135
Steering wheel adjustment 9, 77
Steering wheel controls 77
Stop watch 108
Storage..... 67
Storage compartments..... 67
Sunglasses storage 68
Sunvisor lights 115
Sun visors 43
Symbols 4

T
Tachometer 84
Tail lights 164
Third row seats 52
Three-point seat belt 55
Tools 173
Top-tether child restraint systems 65
Towing..... 148, 187
Towing another vehicle 188
Towing equipment 149
Towing hitch installation dimensions 215
Towing the vehicle 187

Trailer coupling..... 148
Trailer stability assist 152
Trailer towing 148
Transmission 16
Transmission display 129, 135
Tread depth 177
Trip computer 23
Trip computer in Board-Info-Display 104
Trip computer in Graphic-Info-Display or Colour-Info-Display 105
Triple-Info-Display 94
Trip odometer 83
Turn and lane-change signals ... 112
Turn signal 88
Tyre chains 178
Tyre deflation detection system. 24, 177
Tyre designations 175
Tyre pressure 103, 175
Tyre pressure monitoring system 25, 176
Tyre pressures 108, 211
Tyre repair kit 179
Tyres 174

U

Ultrasonic parking assist 90
Underseat storage 68
Upholstery..... 191
Using this manual 3

V

Vehicle checks..... 154
Vehicle data..... 199
Vehicle data recording and privacy..... 216
Vehicle dimensions 209
Vehicle Identification Number 197
Vehicle jack..... 173
Vehicle messages 101
Vehicle security..... 36
Vehicle specific data 3
Vehicle storage..... 153
Vehicle tools..... 173
Vehicle unlocking 6
Vehicle weight 207
Ventilation..... 117

W

Warning chimes 101
Warning lights..... 83
Warning triangle 74
Washer and wiper systems 14
Washer fluid 157
Washer fluid level 103
Wheel changing 182
Wheel covers 178
Wheels and tyres 174
Windows..... 40
Windscreen..... 40
Windscreen wiper/washer 78
Winter mode 90
Winter tyres 174
Wiper blade replacement 159

X

Xenon headlights 163

Copyright by ADAM OPEL AG, Rüsselsheim, Germany.

The information contained in this publication is effective as of the date indicated below. Adam Opel AG reserves the right to make changes to the technical specifications, features and design of the vehicles relative to the information in this publication as well as changes to the publication itself.

Edition: July 2012, ADAM OPEL AG, Rüsselsheim.

Printed on chlorine-free bleached paper.

KTA-2623/13-en

07/2012