HOOD

ON-VEHICLE INSPECTION

1. INSPECT HOOD SUB-ASSEMBLY

(a) Check that the clearance measurements of areas A to C are within each standard range.

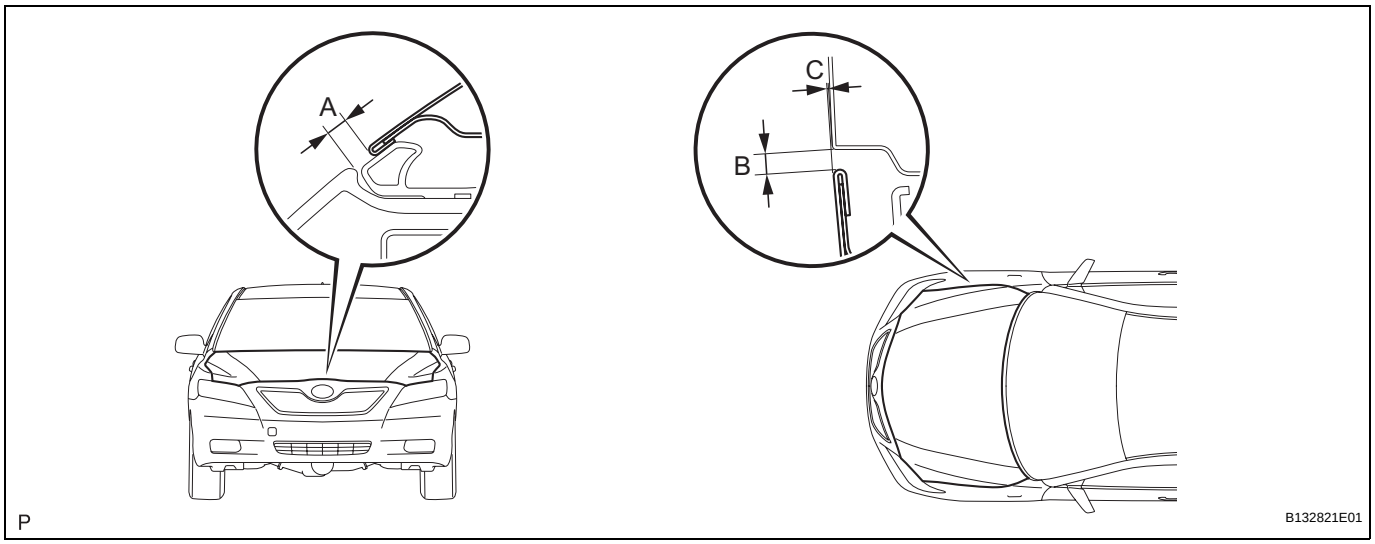

Standard clearance

Area	Measurement
A	2.3 to 5.3 mm (0.091 to 0.209 in.)
B	2.0 to 5.0 mm (0.079 to 0.197 in.)
C	-1.4 to 1.6 mm (-0.055 to 0.063 in.)

ADJUSTMENT

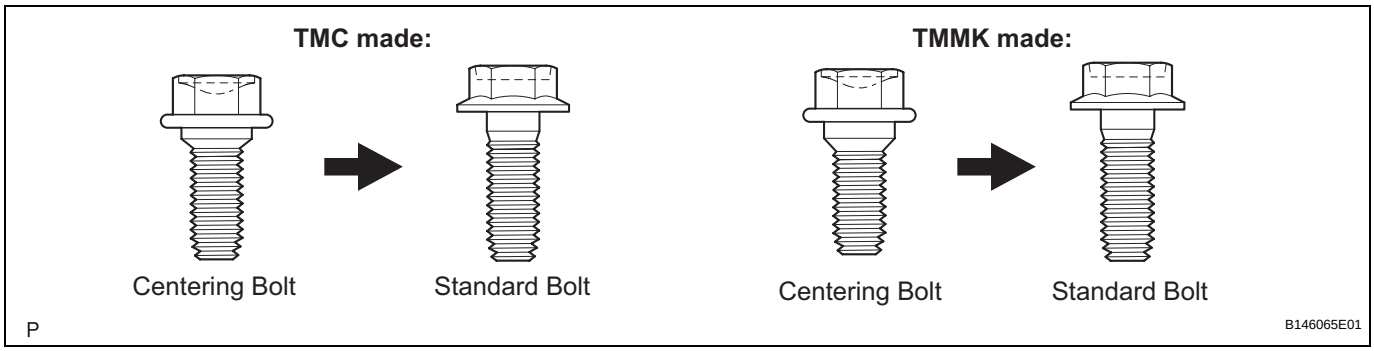

ED

HINT:
- Centering bolts are used to mount the hood hinge and hood lock. The hood and hood lock cannot be adjusted with the centering bolts on. Substitute the centering bolts with standard bolts (with washers) when making adjustments.
- A bolt without a torque specification is shown in the standard bolt chart (See page SS-2).

1. REMOVE COOL AIR INTAKE DUCT SEAL (for 2GR-FE) (See page ET-4)

2. REMOVE FRONT BUMPER ASSEMBLY (w/o Fog Light) (See page ET-5)

3. REMOVE FRONT BUMPER ASSEMBLY (w/ Fog Light) (See page ET-6)

4. ADJUST HOOD SUB-ASSEMBLY

(a) Horizontally and vertically adjust the hood.
(1) Loosen the hood's 4 hinge bolts.
(2) Move the hood and adjust the clearance between the hood and front fender.
(3) Tighten the hood's 4 hinge bolts after the adjustment.
Torque: 13 N*m (133 kgf*cm, 10 ft.*lbf)

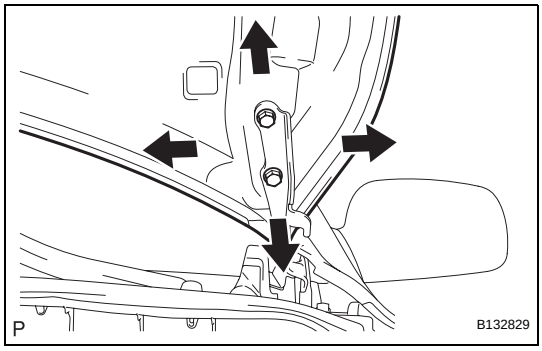

(b) Adjust the height of the hood front end using the cushion rubber.
(1) Adjust the cushion rubber so that the height of the hood and fender are aligned.
HINT:
Raise or lower the hood's front end by turning the cushion rubber.

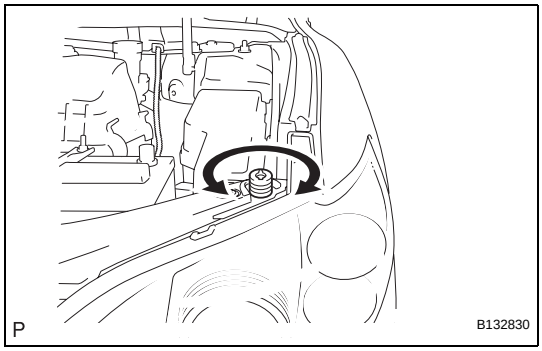

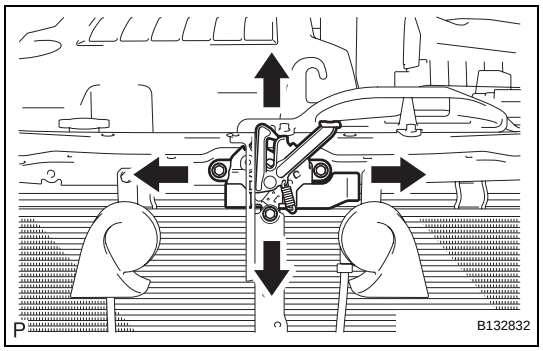

(c) Adjust the hood lock.
   (1) Loosen the 3 bolts.
   (2) Tighten the bolts after the adjustment.
   Torque: 7.5 N*m (77 kgf*cm, 66 in.*lbf)
   (3) Adjust the hood lock position so that the striker can enter it smoothly.

5. **INSTALL FRONT BUMPER ASSEMBLY (w/o Fog Light) (See page ET-13)**
6. **INSTALL FRONT BUMPER ASSEMBLY (w/ Fog Light) (See page ET-14)**
7. **INSTALL COOL AIR INTAKE DUCT SEAL (for 2GR-FE) (See page ET-14)**
8. **VEHICLE PREPARATION FOR FOG LIGHT AIM (w/ Fog Light) (See page LI-79)**
9. **PREPARATION FOR FOG LIGHT AIMING (w/ Fog Light) (See page LI-80)**
10. **FOG LIGHT AIMING INSPECTION (w/ Fog Light) (See page LI-81)**
11. **FOG LIGHT AIMING ADJUSTMENT (w/ Fog Light) (See page LI-82)**

HOOD SUPPORT ROD

COMPONENTS

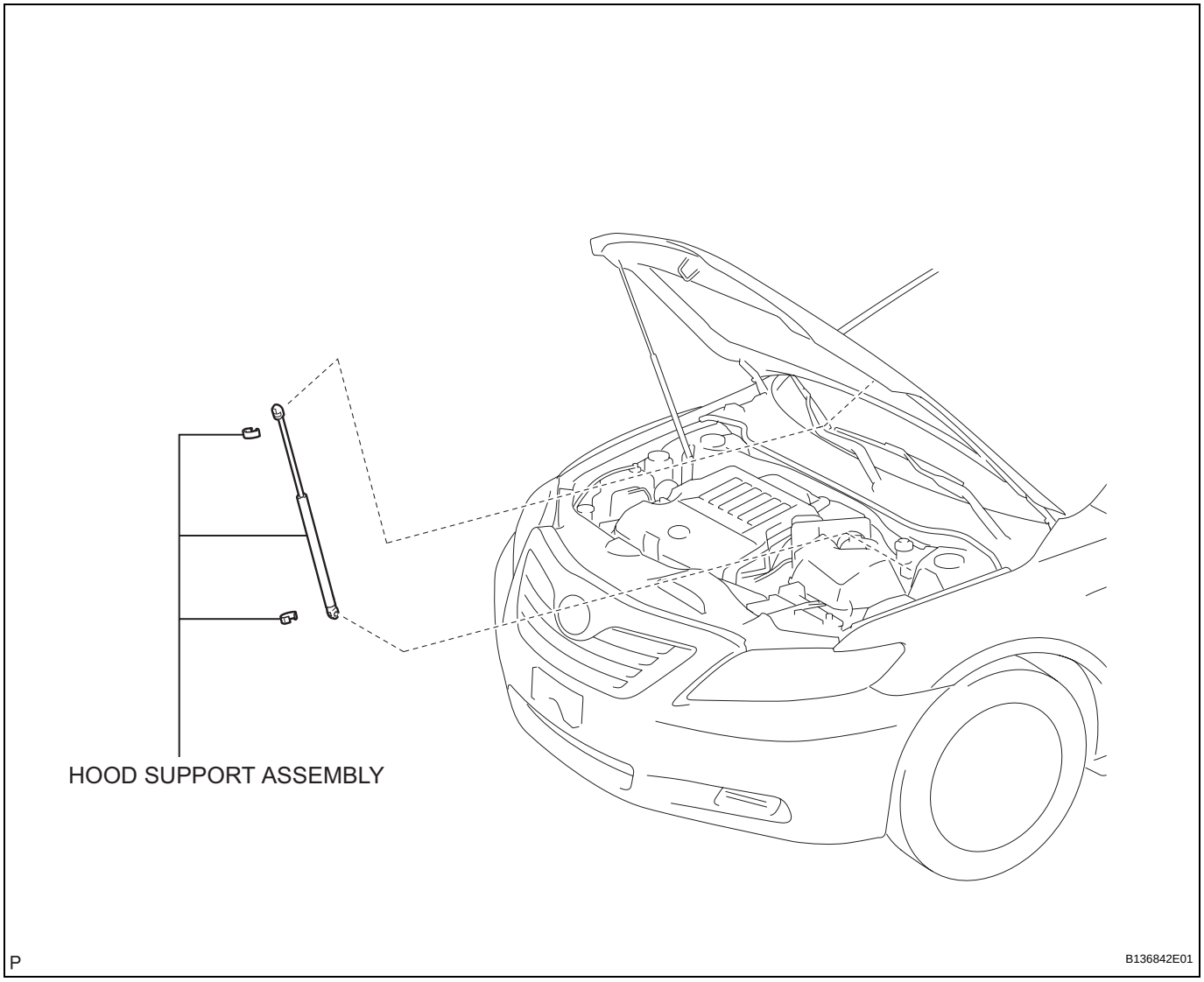

ED

REMOVAL

NOTICE:

- **Avoid touching the stroke portions of the rod as much as possible to prevent foreign matter from attaching to it. Be sure to hold the cylinders while servicing.**
- **Do not wear cotton gloves or other similar materials when handling the rod. Fibers may attach to the rod and result in gas leaks.**
- **Do not apply any load to the cylinders in the horizontal direction in order to prevent the rod from being deformed.**

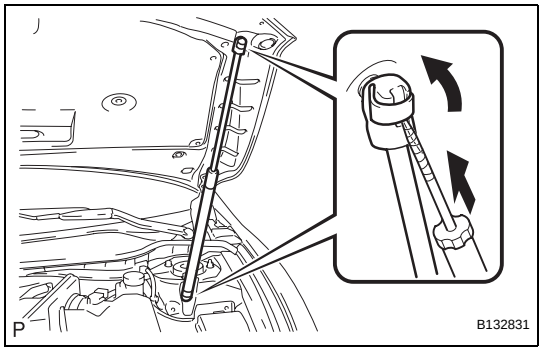

1. REMOVE HOOD SUPPORT ASSEMBLY

(a) Using a screwdriver, remove the hood support assembly while releasing the 2 clips.

NOTICE:

Remove the hood support assembly while supporting the hood with hand.

INSTALLATION

NOTICE:

- **Avoid touching the stroke portions of the rod as much as possible to prevent foreign matter from attaching to it. Be sure to hold the cylinders while servicing.**
- **Do not wear cotton gloves or other similar materials when handling the rod. Fibers may attach to the rod and result in gas leaks.**
- **Do not apply any load to the cylinders in the horizontal direction in order to prevent the rod from being deformed.**

1. INSTALL HOOD SUPPORT ASSEMBLY

(a) Install the hood support assembly.

NOTICE:

- **Install the hood support assembly while supporting the hood with hand.**
- **Check that the hood support assembly is engaged in the ball joint and it cannot be pulled out.**

DISPOSAL

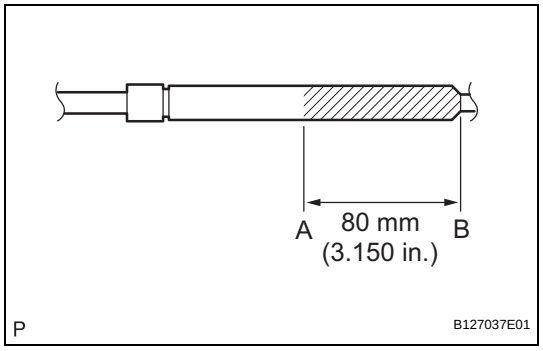

1. DISPOSE OF HOOD SUPPORT ASSEMBLY

(a) Horizontally fix the hood support in a vise with the piston-rod pulled out.

(b) Wear safety glasses. Gradually cut a part between A and B shown in the illustration using a metal saw and gradually release the gas.

NOTICE:

Although the gas inside the hood support is colorless, odorless and harmless, there is a possibility that metal debris could scatter. Therefore, cover it with a piece of cloth or other material.

HOOD LOCK CONTROL CABLE ASSEMBLY

COMPONENTS

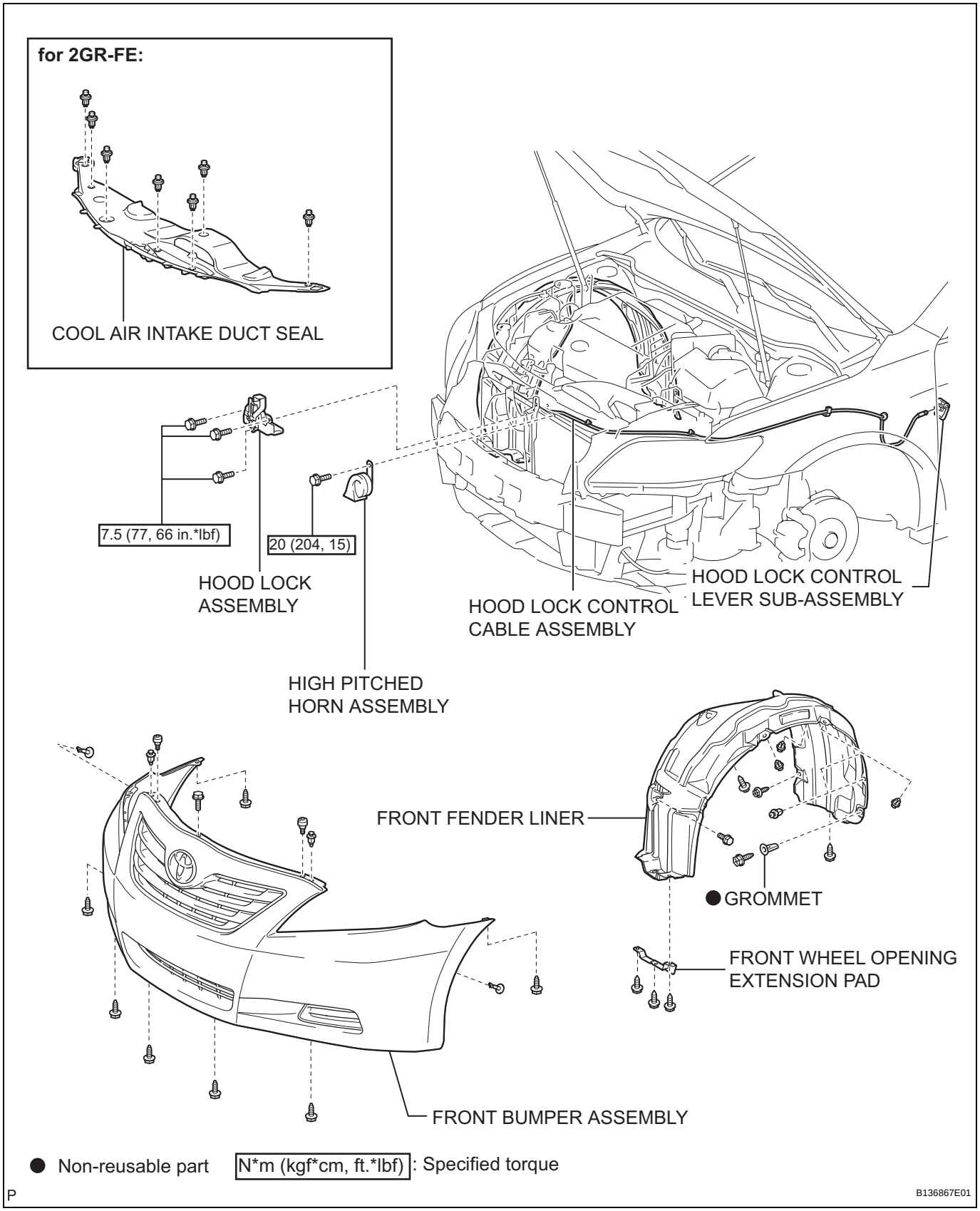

ED

ED

REMOVAL

1. REMOVE FRONT WHEEL

2. REMOVE FRONT WHEEL OPENING EXTENSION PAD

(a) Remove the 3 screws and the front wheel opening extension pad.

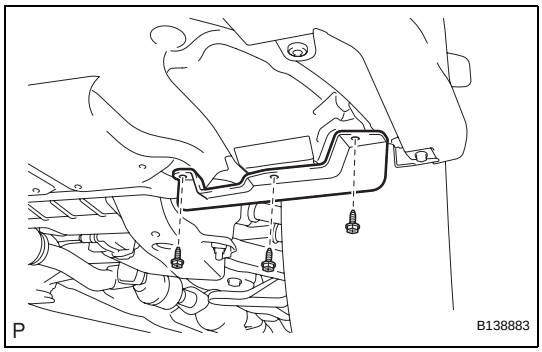

3. REMOVE COOL AIR INTAKE DUCT SEAL (for 2GR-FE) (See page ET-4)

4. REMOVE FRONT BUMPER ASSEMBLY (w/o Fog Light) (See page ET-5)

5. REMOVE FRONT BUMPER ASSEMBLY (w/ Fog Light) (See page ET-6)

6. REMOVE FRONT FENDER LINER

(a) Remove the 5 clips and bolt.

(b) Remove the 4 screws, grommet and the front fender liner.

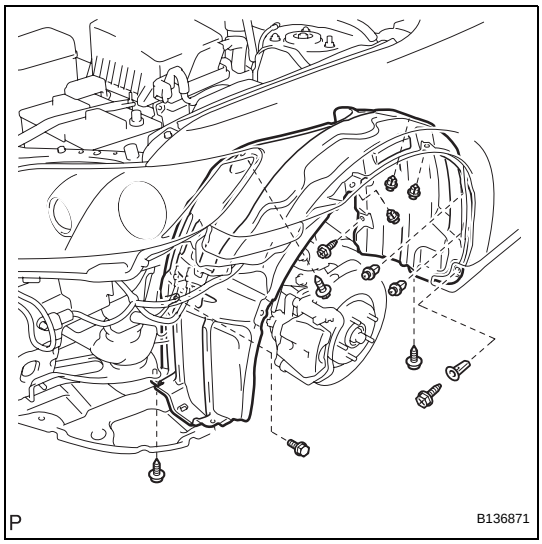

7. REMOVE HIGH PITCHED HORN ASSEMBLY (See page HO-7)

8. REMOVE HOOD LOCK ASSEMBLY (w/o Engine Hood Courtesy Switch)

(a) Remove the 3 bolts.

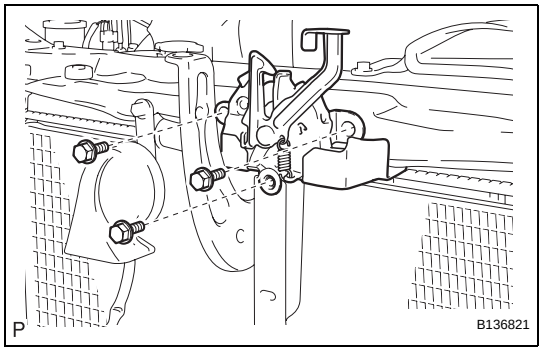

(b) Disconnect the hood lock control cable.

(c) Remove the hood lock assembly.

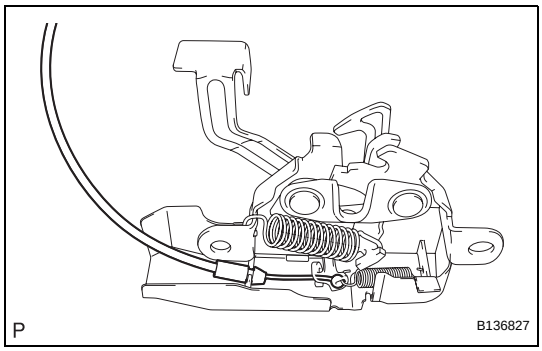

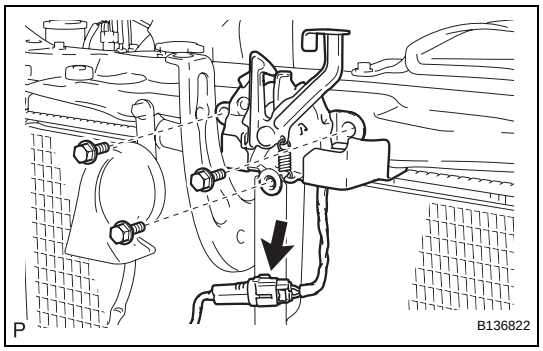

9. REMOVE HOOD LOCK ASSEMBLY (w/ Engine Hood Courtesy Switch)

(a) Disconnect the connector.

(b) Remove the 3 bolts.

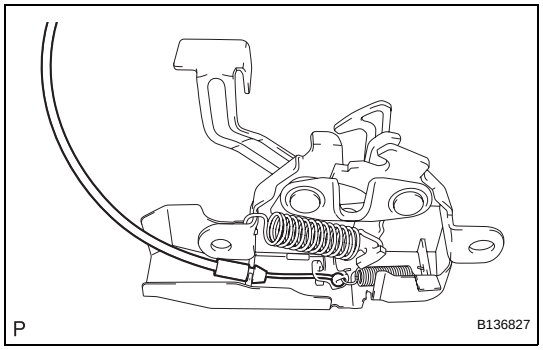

(c) Disconnect the hood lock control cable.

(d) Remove the hood lock assembly.

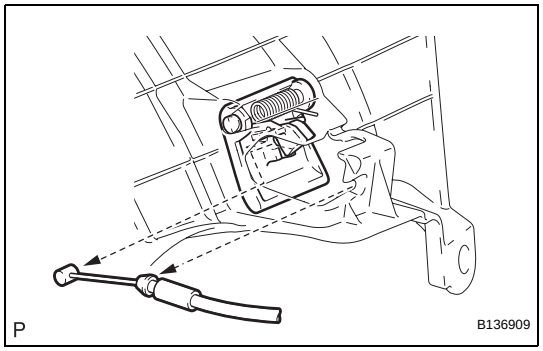

10. REMOVE HOOD LOCK CONTROL LEVER SUB-ASSEMBLY

(a) Disconnect the hood lock control cable and remove the hood lock control lever.

11. REMOVE HOOD LOCK CONTROL CABLE ASSEMBLY

(a) Using a screwdriver, disconnect the clamps shown in the illustration.

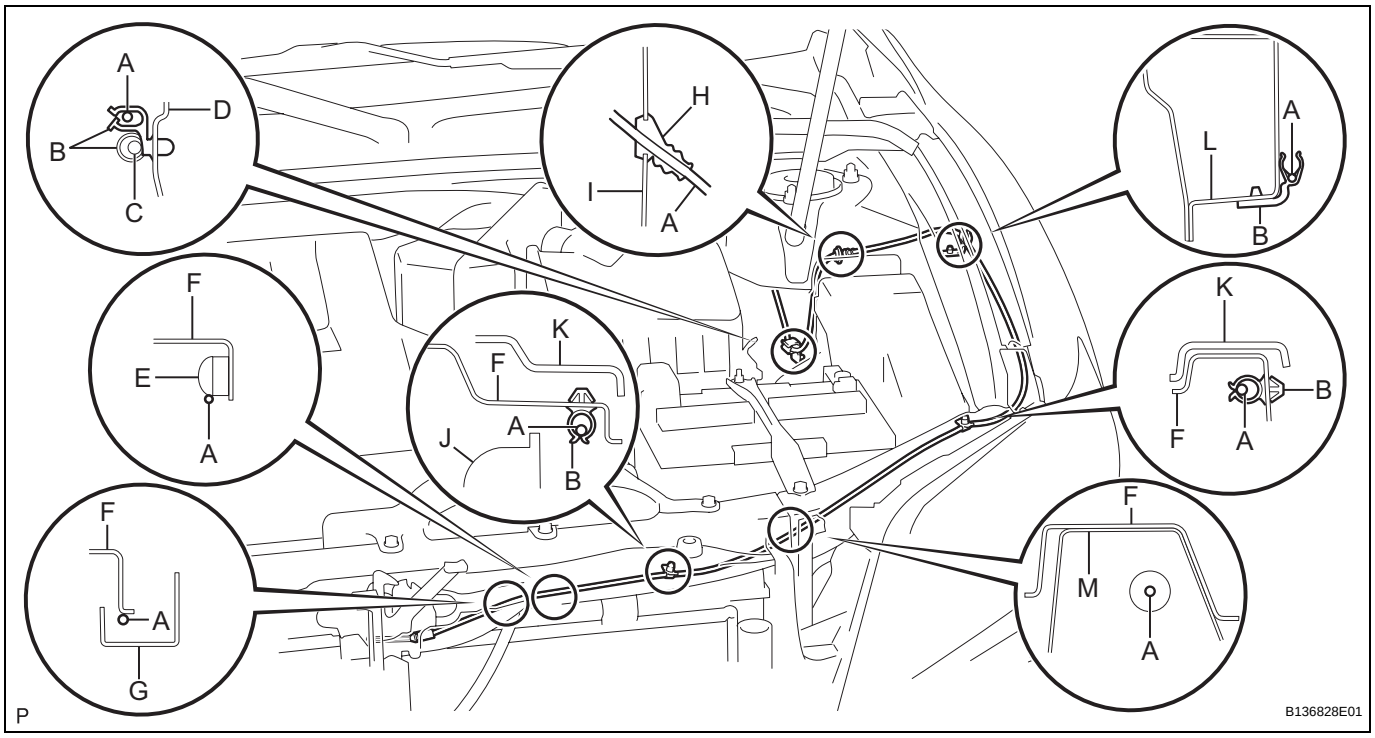

Area	Part Name	Area	Part Name
A	Hood lock control cable	H	Grommet
B	Clamp	I	Side member outer
C	Wire harness	J	Radiator
D	Pillar	K	Radiator support cover
E	Nut	L	Front fender apron
F	Radiator support upper	M	Brace
G	Hood lock protector	-	-

HINT:
Tape the screwdriver tip before use.

(b) Pull the cable from the engine compartment and remove it.

INSTALLATION

1. INSTALL HOOD LOCK CONTROL CABLE ASSEMBLY

(a) Pass the hood lock control cable assembly into the engine compartment.

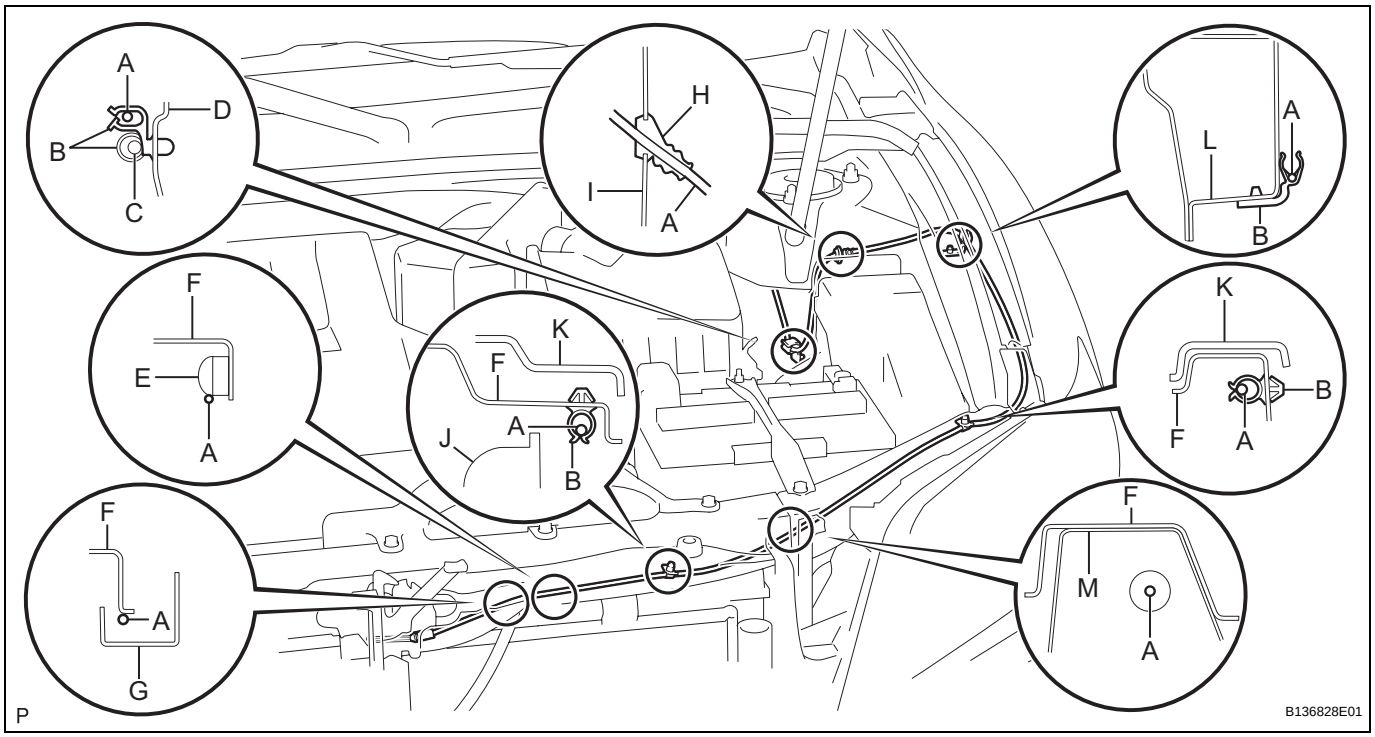

Area	Part Name	Area	Part Name
A	Hood lock control cable	H	Grommet
B	Clamp	I	Side member outer
C	Wire harness	J	Radiator
D	Pillar	K	Radiator support cover
E	Nut	L	Front fender apron
F	Radiator support upper	M	Brace
G	Hood lock protector	-	-

(b) Pass the cable front side through the upper radiator support.

(c) Connect the clamps as shown in the illustration.

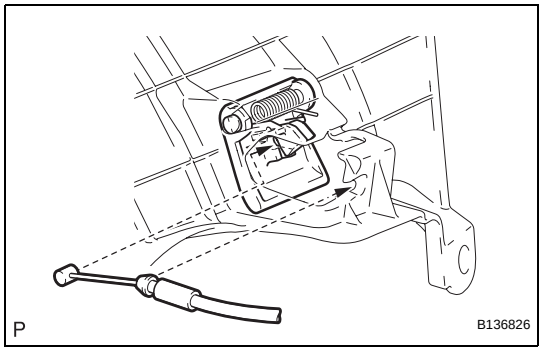

2. INSTALL HOOD LOCK CONTROL LEVER SUB-ASSEMBLY

(a) Install the hood lock control lever and connect the hood lock control cable.

ED

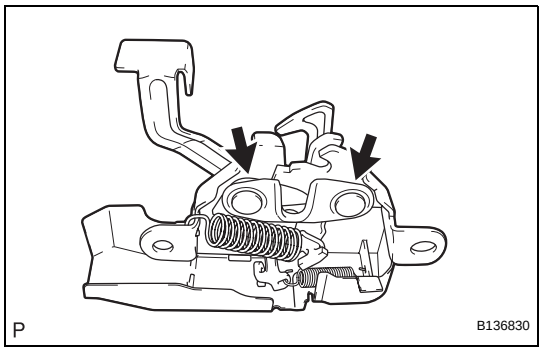

3. INSTALL HOOD LOCK ASSEMBLY (w/o Engine Hood Courtesy Switch)

(a) Apply MP grease to the sliding areas of the lock.

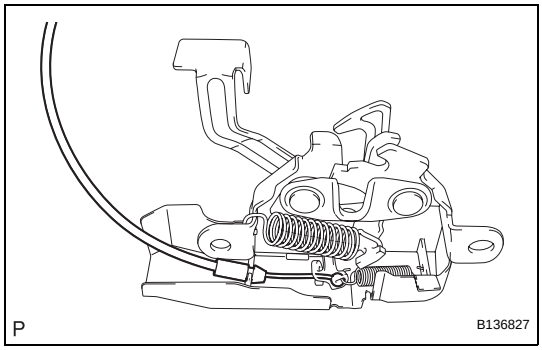

(b) Connect the hood lock control cable.

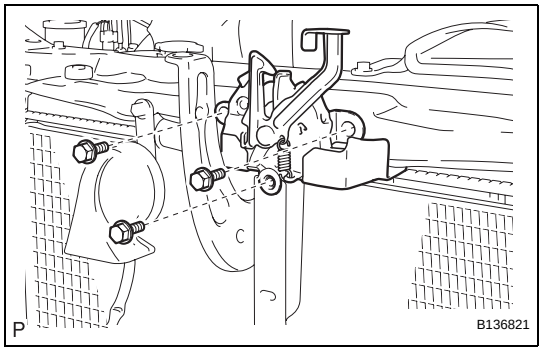

(c) Install the hood lock assembly with the 3 bolts.
Torque: 7.5 N*m (77 kgf*cm, 66 in.*lbf)

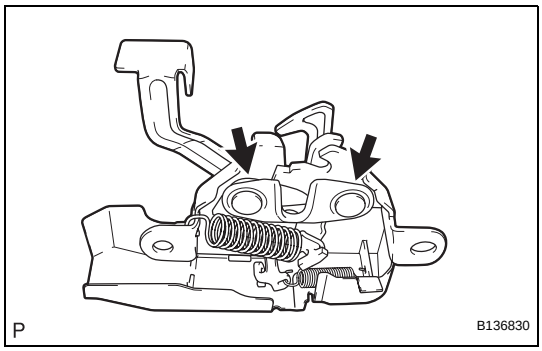

4. INSTALL HOOD LOCK ASSEMBLY (w/ Engine Hood Courtesy Switch)

(a) Apply MP grease to the sliding areas of the lock.

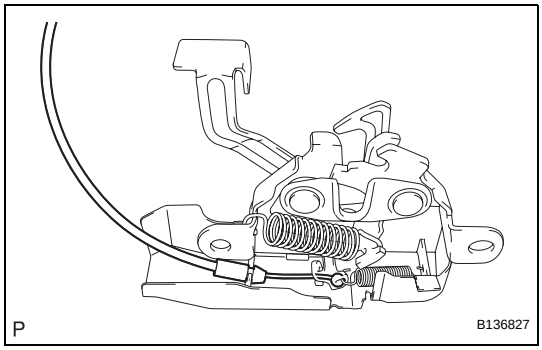

(b) Connect the hood lock control cable.

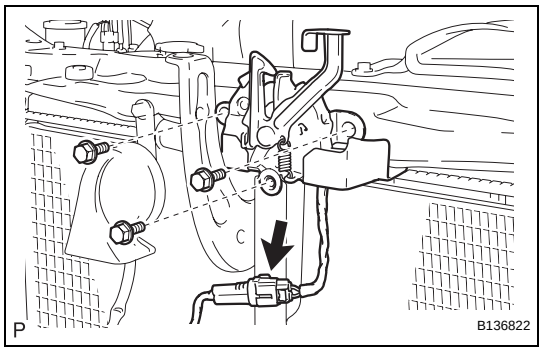

(c) Install the hood lock assembly with the 3 bolts.
Torque: 7.5 N*m (77 kgf*cm, 66 in.*lbf)
(d) Connect the connector.

5. INSTALL HIGH PITCHED HORN ASSEMBLY (See page HO-7)

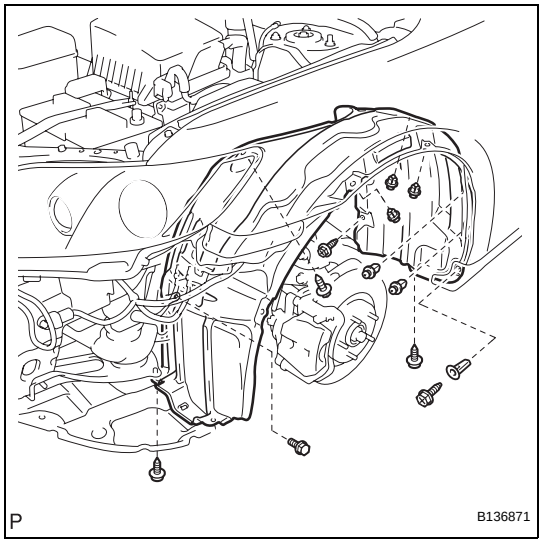

6. INSTALL FRONT FENDER LINER
(a) Install the front fender liner with the grommet and 4 screws.
(b) Install the bolt and 5 clips.

7. INSPECT HOOD SUB-ASSEMBLY (See page ED-1)

8. ADJUST HOOD SUB-ASSEMBLY (See page ED-2)

9. INSTALL FRONT BUMPER ASSEMBLY (w/o Fog Light) (See page ET-13)

10. INSTALL FRONT BUMPER ASSEMBLY (w/ Fog Light) (See page ET-14)

11. INSTALL COOL AIR INTAKE DUCT SEAL (for 2GR-FE) (See page ET-14)

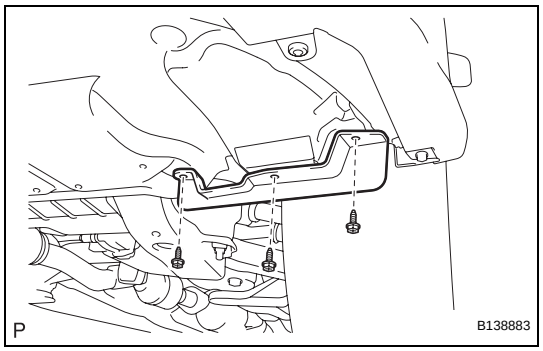

12. INSTALL FRONT WHEEL OPENING EXTENSION PAD
(a) Install the front wheel opening extension pad with the 3 screws.

13. INSTALL FRONT WHEEL (See page SP-22)

14. VEHICLE PREPARATION FOR FOG LIGHT AIM (w/ Fog Light) (See page LI-79)

15. PREPARATION FOR FOG LIGHT AIMING (w/ Fog Light) (See page LI-80)

16. FOG LIGHT AIMING INSPECTION (w/ Fog Light) (See page LI-81)

17. FOG LIGHT AIMING ADJUSTMENT (w/ Fog Light) (See page LI-82)

FRONT DOOR

COMPONENTS

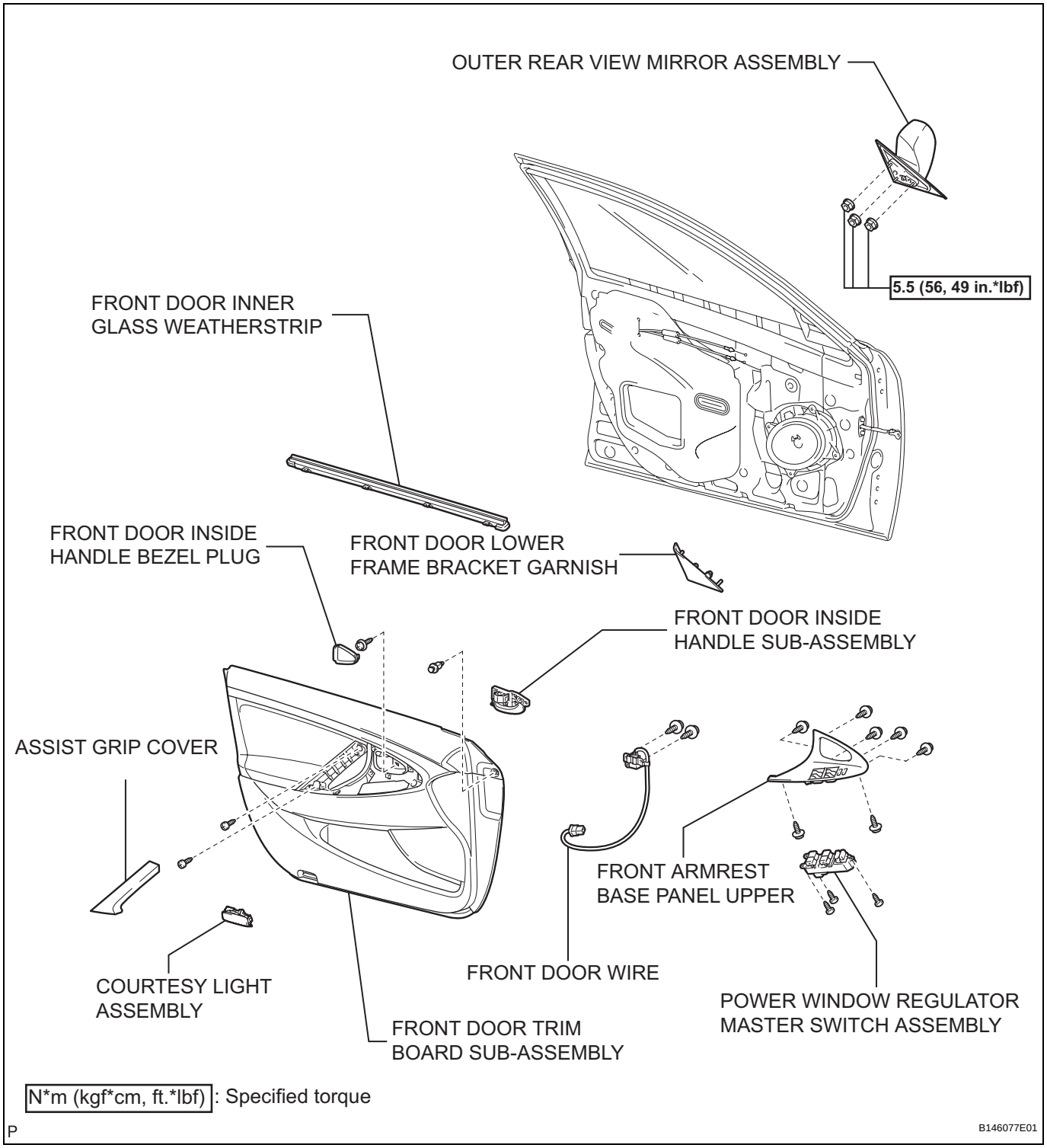

ED

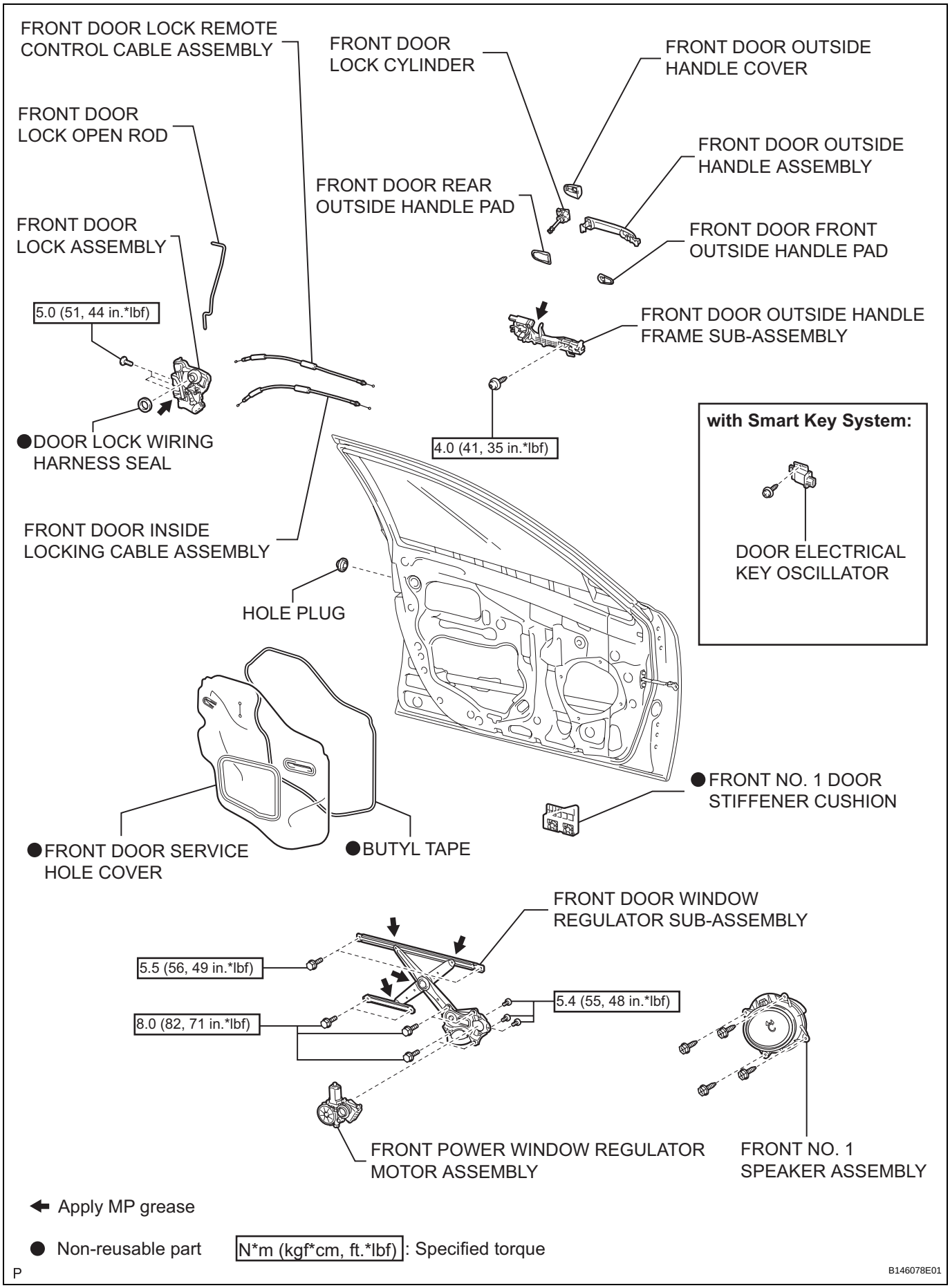
FRONT DOOR LOCK REMOTE CONTROL CABLE ASSEMBLY
FRONT DOOR LOCK CYLINDER
FRONT DOOR OUTSIDE HANDLE COVER
FRONT DOOR LOCK OPEN ROD
FRONT DOOR OUTSIDE HANDLE ASSEMBLY
FRONT DOOR REAR OUTSIDE HANDLE PAD
FRONT DOOR LOCK ASSEMBLY
FRONT DOOR FRONT OUTSIDE HANDLE PAD
5.0 (51, 44 in.*lbf)
FRONT DOOR OUTSIDE HANDLE FRAME SUB-ASSEMBLY
●DOOR LOCK WIRING HARNESS SEAL
4.0 (41, 35 in.*lbf)
with Smart Key System:
DOOR ELECTRICAL KEY OSCILLATOR
FRONT DOOR INSIDE LOCKING CABLE ASSEMBLY
HOLE PLUG
●FRONT NO. 1 DOOR STIFFENER CUSHION
●FRONT DOOR SERVICE HOLE COVER
●BUTYL TAPE
FRONT DOOR WINDOW REGULATOR SUB-ASSEMBLY
5.5 (56, 49 in.*lbf)
5.4 (55, 48 in.*lbf)
8.0 (82, 71 in.*lbf)
FRONT POWER WINDOW REGULATOR MOTOR ASSEMBLY
FRONT NO. 1 SPEAKER ASSEMBLY
Apply MP grease
● Non-reusable part
N*m (kgf*cm, ft.*lbf): Specified torque
P
B146078E01

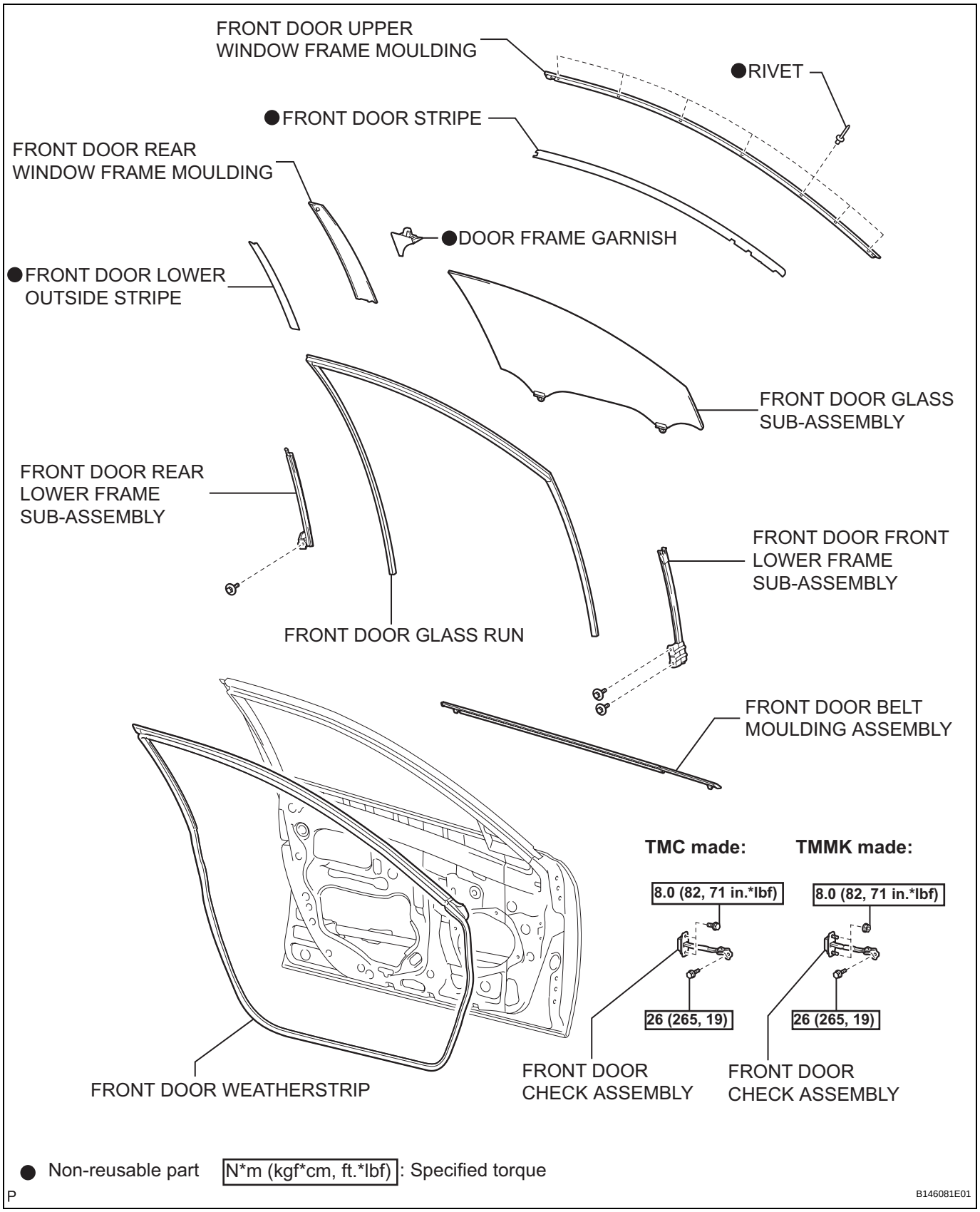

● Non-reusable part N*m (kgf*cm, ft.*lbf): Specified torque

P B146081E01

ED

ED

ON-VEHICLE INSPECTION

1. INSPECT FRONT DOOR PANEL SUB-ASSEMBLY

(a) Check that the clearance measurements of areas A to L are within each standard range.

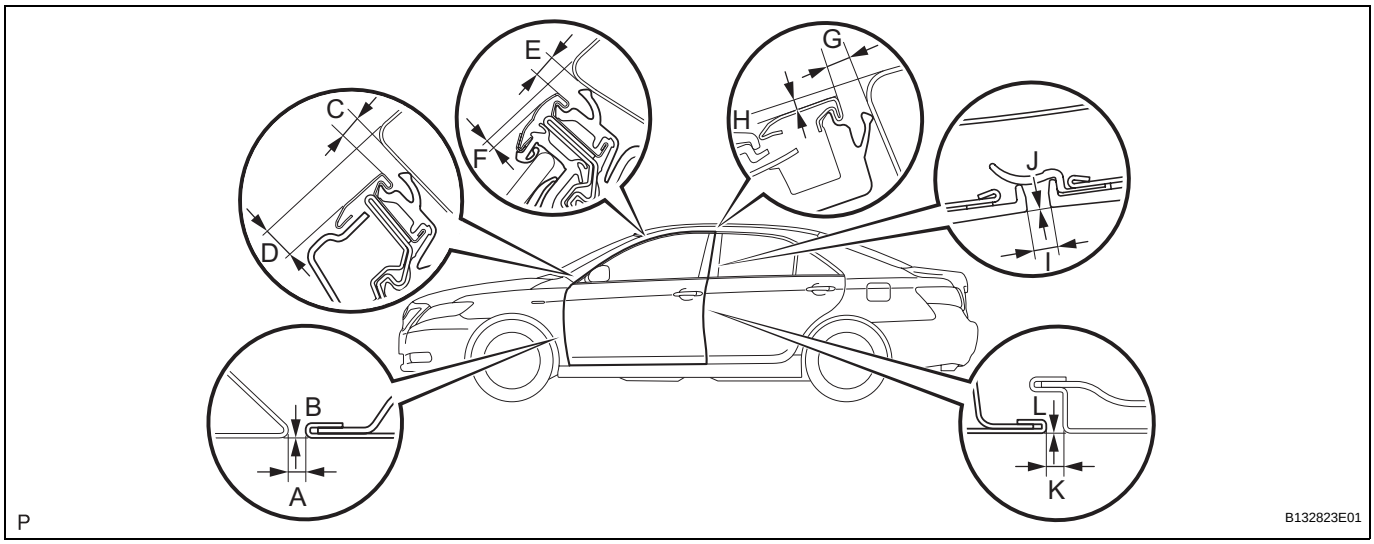

Standard clearance

Area	Measurement	Area	Measurement
A	2.7 to 5.7 mm (0.106 to 0.224 in.)	G	3.3 to 6.3 mm (0.130 to 0.248 in.)
B	-1.5 to 1.5 mm (-0.059 to 0.059 in.)	H	-0.3 to 2.7 mm (-0.012 to 0.106 in.)
C	3.3 to 6.3 mm (0.130 to 0.248 in.)	I	2.3 to 6.3 mm (0.091 to 0.248 in.)
D	6.4 to 9.4 mm (0.252 to 0.370 in.)	J	-2.0 to 2.0 mm (-0.079 to 0.079 in.)
E	3.3 to 6.3 mm (0.130 to 0.248 in.)	K	2.7 to 5.7 mm (0.106 to 0.224 in.)
F	0.9 to 3.9 mm (0.035 to 0.154 in.)	L	-1.5 to 1.5 mm (-0.059 to 0.059 in.)

DISASSEMBLY

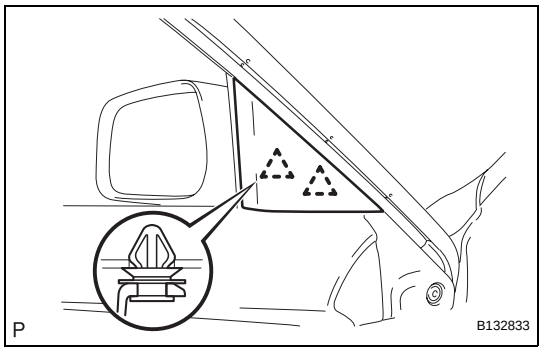

1. REMOVE FRONT DOOR LOWER FRAME BRACKET GARNISH

(a) Disengage the 2 clips and remove the front door lower frame bracket garnish.

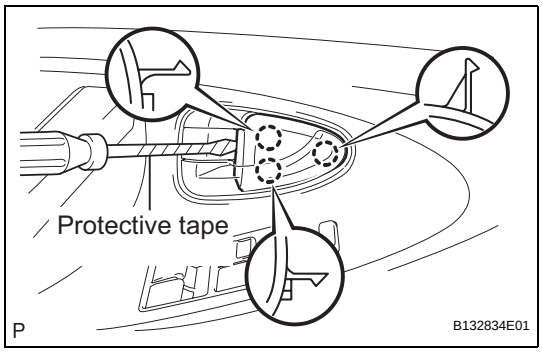

2. REMOVE FRONT DOOR INSIDE HANDLE BEZEL PLUG

(a) Using a screwdriver wrapped with protective tape, disengage the 3 claws, and remove the front door inside handle bezel plug.

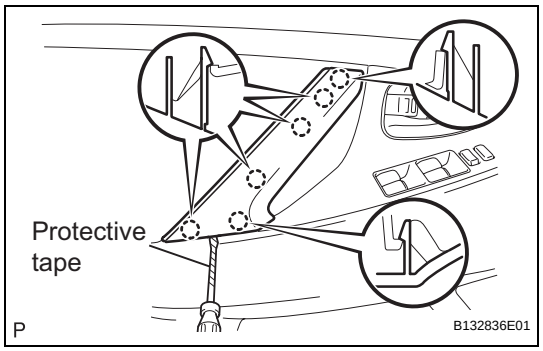

3. REMOVE ASSIST GRIP COVER

(a) Using a screwdriver wrapped with protective tape, disengage the 6 claws and remove the assist grip cover.

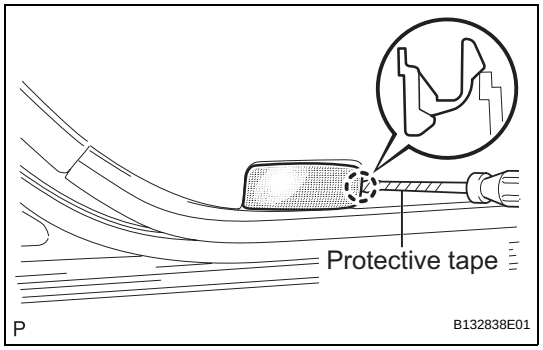

4. REMOVE COURTESY LIGHT ASSEMBLY

(a) Using a screwdriver wrapped with protective tape, disengage the claw and remove the courtesy light assembly.

(b) Disconnect the connector.

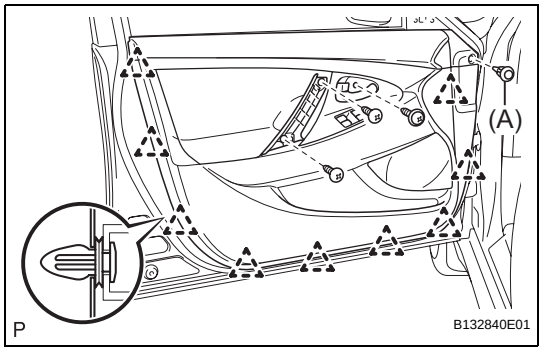

5. REMOVE FRONT DOOR TRIM BOARD SUB-ASSEMBLY

(a) Remove the 3 screws and clip (A).

(b) Using the clip remover, disengage the 9 clips.

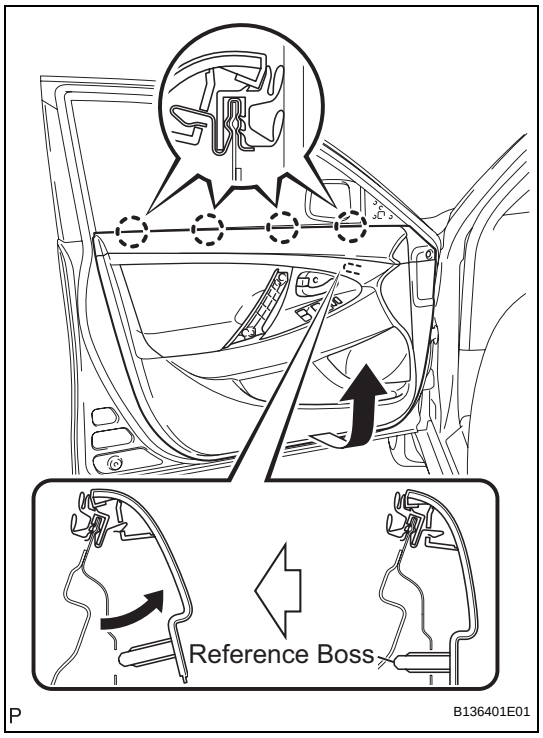

(c) Pull out the front door trim board in the direction indicated by the arrow.

(d) Remove the reference bosses from the front door panel.

(e) Raise the front door trim board to disengage the 4 claws and remove the front door trim board together with the front door inner glass weatherstrip.

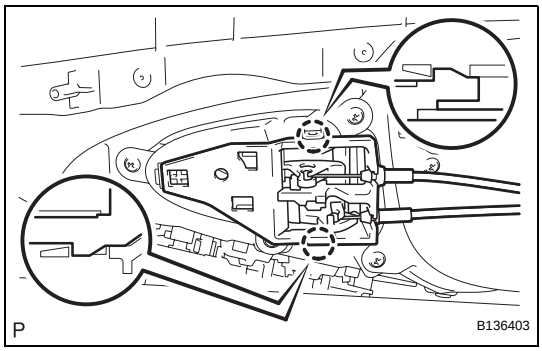

(f) Disengage the 2 claws and disconnect the front door inside handle sub-assembly.

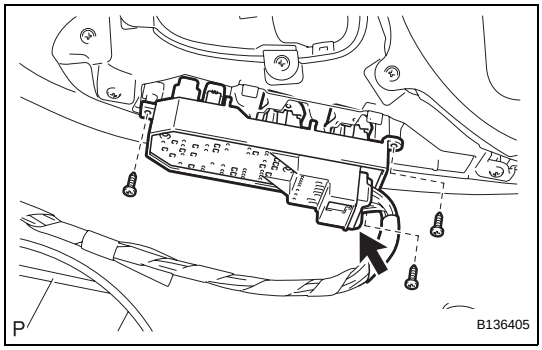

6. REMOVE POWER WINDOW REGULATOR MASTER SWITCH ASSEMBLY

(a) Disconnect the connector.

(b) Remove the 3 screws and the power window regulator master switch assembly.

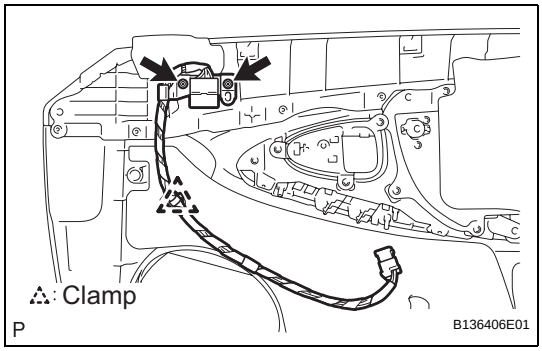

7. REMOVE FRONT DOOR WIRE (for Driver Side)

(a) Disengage the clamp and remove the 2 screws and front door wire.

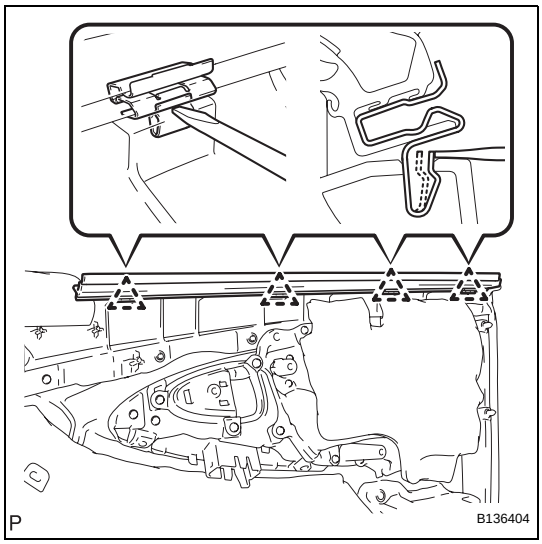

8. REMOVE FRONT DOOR INNER GLASS WEATHERSTRIP

(a) Using a screwdriver, disengage the 4 clips as shown in the illustration and remove the front door inner glass weatherstrip from the front door trim board.

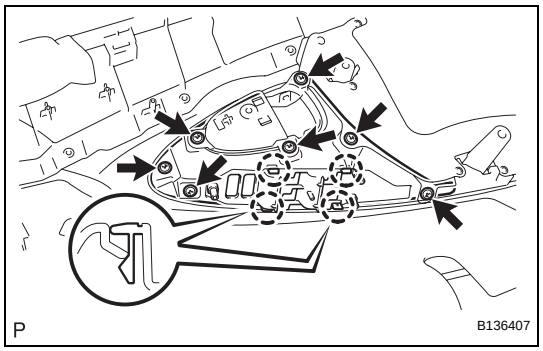

9. REMOVE FRONT ARMREST BASE PANEL UPPER

(a) Remove the 7 screws.

(b) Disengage the 4 claws and remove the front armrest base panel upper.

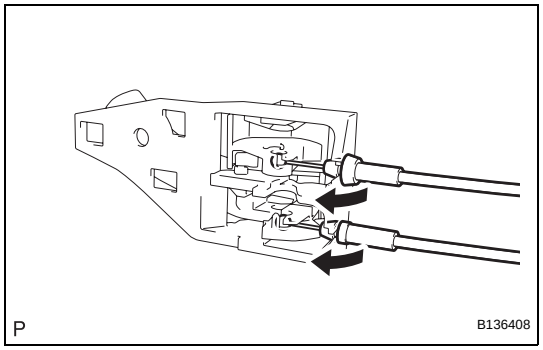

10. REMOVE FRONT DOOR INSIDE HANDLE SUB-ASSEMBLY

(a) Disconnect the front door lock remote control cable and front door inside locking cable and remove the front door inside handle sub-assembly.

11. REMOVE FRONT NO. 1 SPEAKER ASSEMBLY (See page AV-155)

12. REMOVE OUTER REAR VIEW MIRROR ASSEMBLY (See page MI-15)

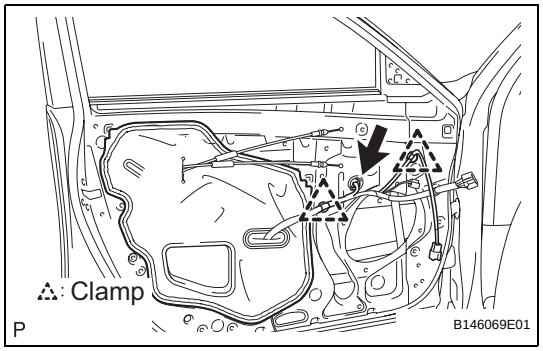

13. REMOVE FRONT DOOR SERVICE HOLE COVER

(a) Disconnect the connector and each clamp, and remove the front door service hole cover.
HINT:
Remove the remaining butyl tape on the door side.

14. REMOVE FRONT DOOR GLASS SUB-ASSEMBLY

(a) Connect the front power window regulator motor assembly connector.

(b) Connect the power window regulator master switch assembly and move the front door glass sub-assembly so that the door glass bolts can be seen.

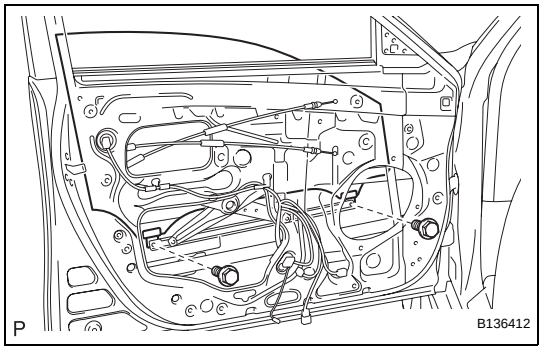

(c) Remove the 2 bolts.
NOTICE:
After the bolts are removed, the door glass may fall and become deformed.

ED

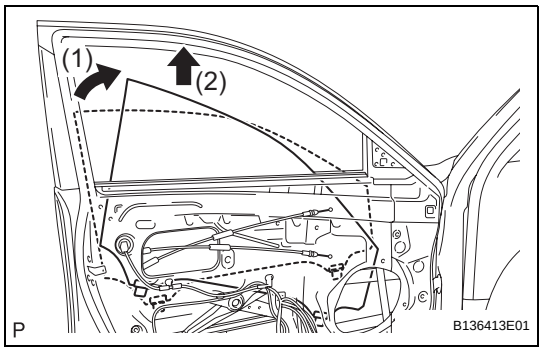

(d) Remove the front door glass sub-assembly as shown in the illustration.
NOTICE:
Do not damage the door glass.

(e) Disconnect the power window regulator master switch assembly and front power window regulator motor assembly connector.

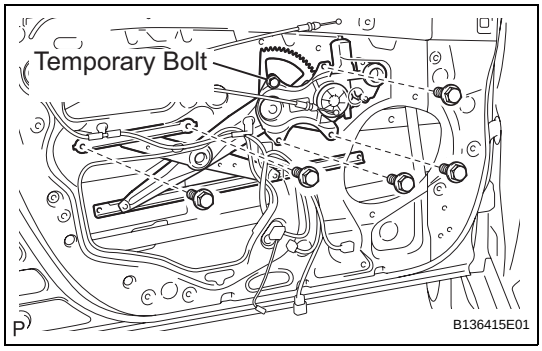

15. REMOVE FRONT DOOR WINDOW REGULATOR SUB-ASSEMBLY

(a) Loosen the temporary bolt.
NOTICE:
If the temporary bolt is removed, the front door window regulator may fall and become deformed.

(b) Remove the 5 bolts.

(c) Remove the front door window regulator sub-assembly and the power window regulator motor assembly front as a unit.

(d) Remove the temporary bolt from the front door window regulator sub-assembly.

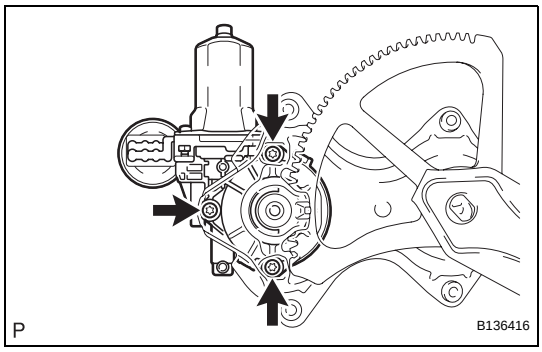

16. REMOVE FRONT POWER WINDOW REGULATOR MOTOR ASSEMBLY

(a) Using a "torx" driver (T25), remove the 3 screws and the front power window regulator motor assembly.

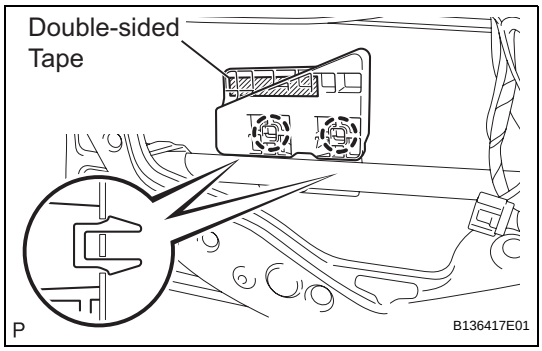

17. REMOVE FRONT NO. 1 DOOR STIFFENER CUSHION

(a) Disengage the 2 claws.

(b) Remove the double-sided tape and the front No. 1 door stiffener cushion.

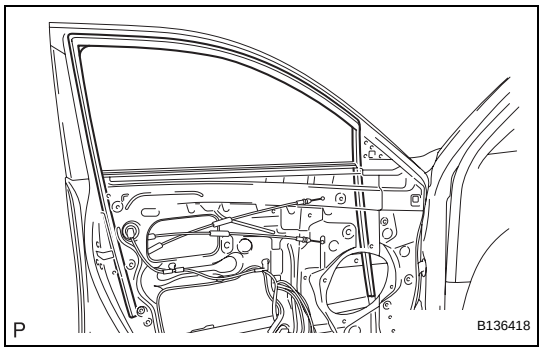

18. REMOVE FRONT DOOR GLASS RUN

(a) Remove the front door glass run.

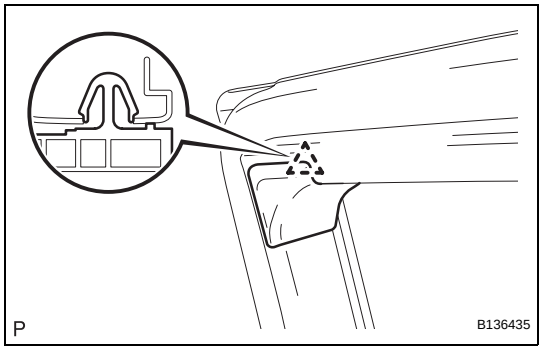

19. REMOVE DOOR FRAME GARNISH

(a) Disengage the clip and remove the door frame garnish.

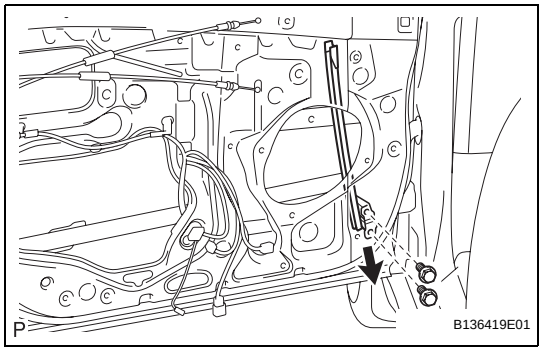

20. REMOVE FRONT DOOR FRONT LOWER FRAME SUB-ASSEMBLY

(a) Remove the 2 bolts and the front door front lower frame sub-assembly as shown in the illustration.

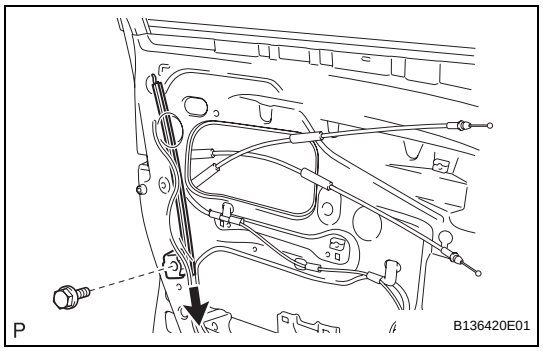

21. REMOVE FRONT DOOR REAR LOWER FRAME SUB-ASSEMBLY

(a) Remove the bolt and the front door rear lower frame sub-assembly as shown in the illustration.

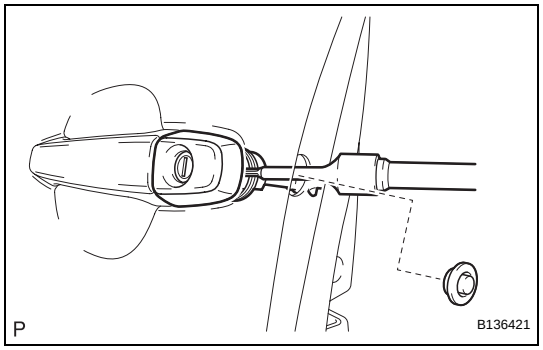

22. REMOVE FRONT DOOR OUTSIDE HANDLE COVER

(a) Remove the hole plug.

(b) Using a "torx" socket wrench (T30), loosen the screw and remove the front door outside handle cover and the door lock key cylinder as a unit.

HINT:

The screw cannot be removed because it is integrated into the front door outside handle frame sub-assembly.

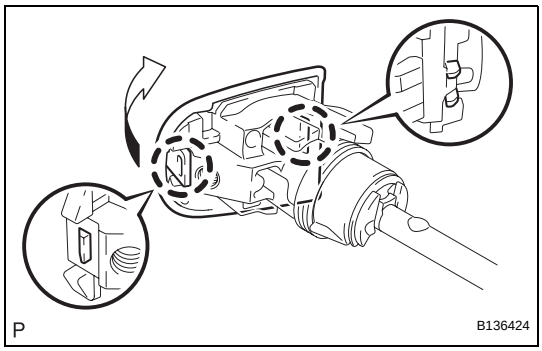

(c) Using a screwdriver, disengage the 2 claws and remove the front door outside handle cover.

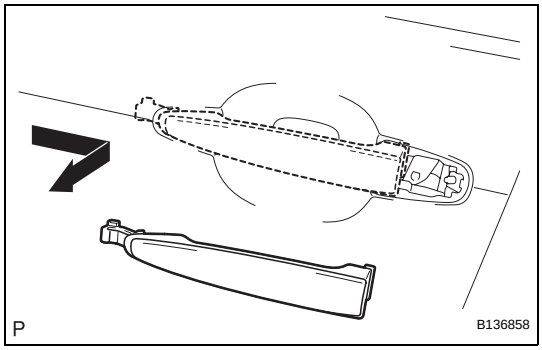

23. REMOVE FRONT DOOR OUTSIDE HANDLE ASSEMBLY (w/o Smart Key System)

(a) Remove the front door outside handle assembly as shown in the illustration.

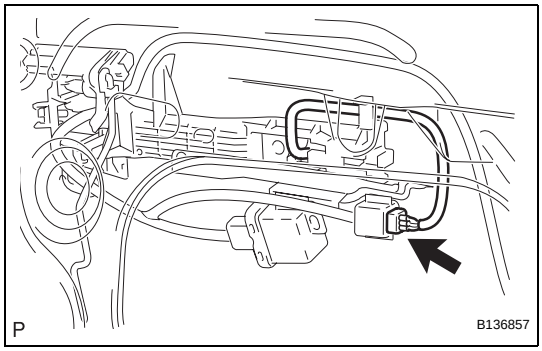

24. REMOVE FRONT DOOR OUTSIDE HANDLE ASSEMBLY (w/ Smart Key System)

(a) Disconnect the connector.

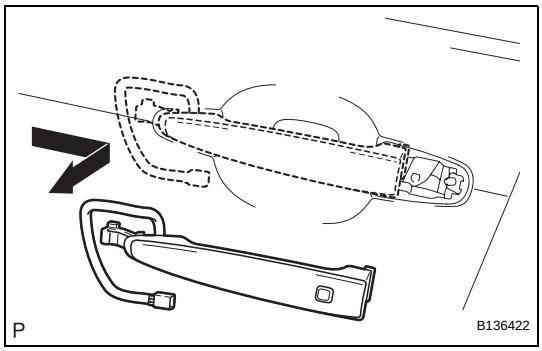

(b) Remove the front door outside handle assembly as shown in the illustration.

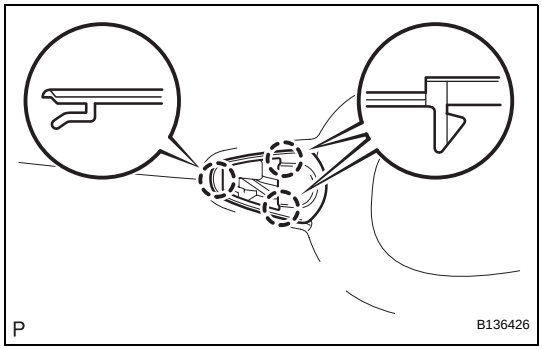

25. REMOVE FRONT DOOR FRONT OUTSIDE HANDLE PAD

(a) Disengage the 3 claws and remove the front door front outside handle pad.

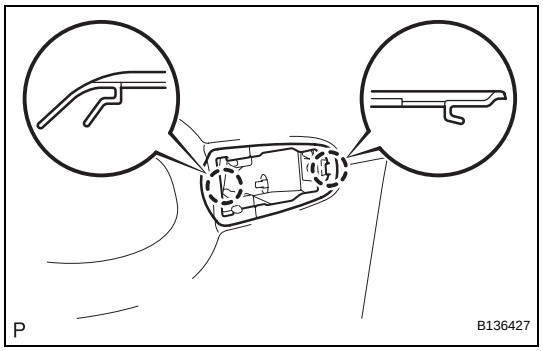

26. REMOVE FRONT DOOR REAR OUTSIDE HANDLE PAD

(a) Disengage the 2 claws and remove the front door rear outside handle pad.

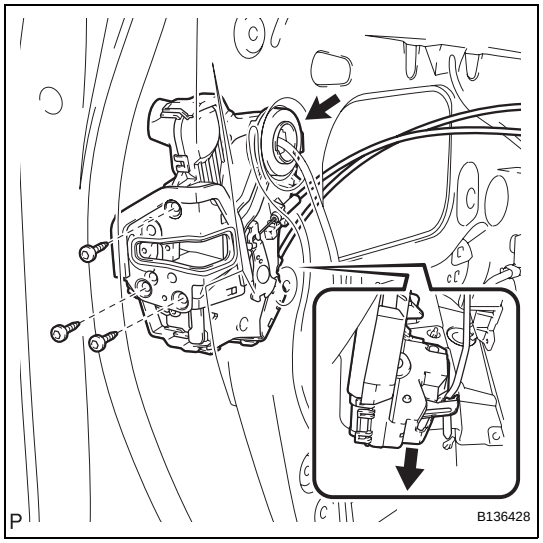

27. REMOVE FRONT DOOR LOCK ASSEMBLY

(a) Disconnect the connector.
(b) Using a "torx" socket wrench (T30), remove the 3 screws.
(c) Slide the front door lock assembly downward, pull out the front door lock open rod from the outside handle frame, and remove the front door lock assembly and cables as a unit.
(d) Remove the front door lock open rod from the front door lock assembly.
(e) Remove the door lock wiring harness sealing from the front door lock assembly.

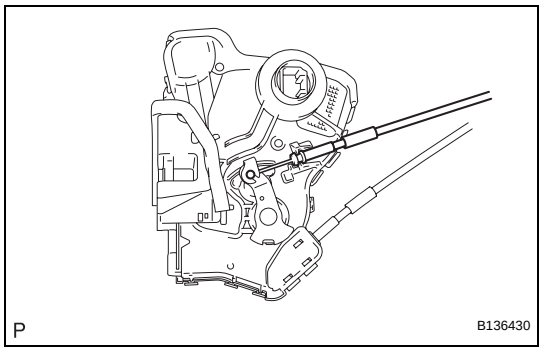

28. REMOVE FRONT DOOR LOCK REMOTE CONTROL CABLE ASSEMBLY

(a) Remove the front door lock remote control cable assembly.

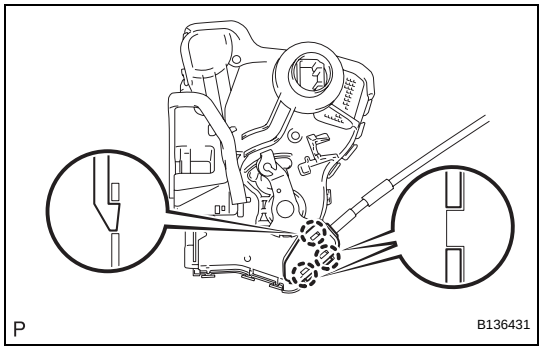

29. REMOVE FRONT DOOR INSIDE LOCKING CABLE ASSEMBLY

(a) Using a screwdriver, disengage the 3 claws.
HINT:
Tape the screwdriver tip before use.

ED

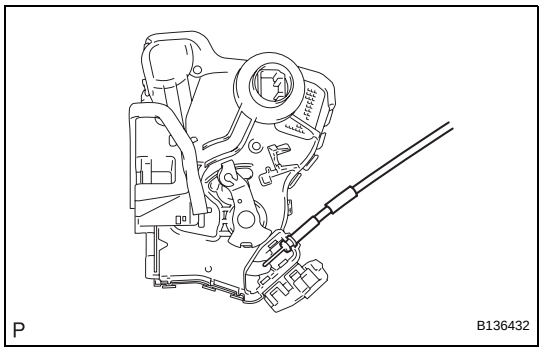

(b) Remove the front door inside locking cable assembly.

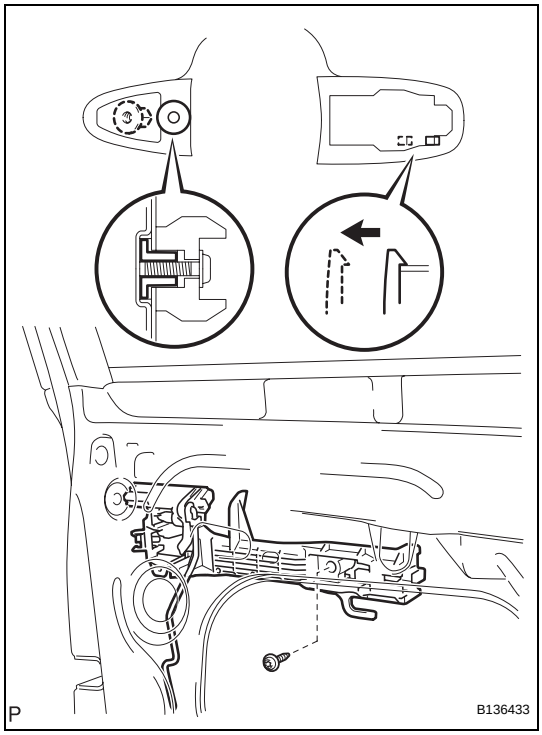

30. REMOVE FRONT DOOR OUTSIDE HANDLE FRAME SUB-ASSEMBLY (w/o Smart Key System)

(a) Using a "torx" socket wrench (T30), remove the screw.

(b) Disengage the claws and remove the front door outside handle frame sub-assembly.

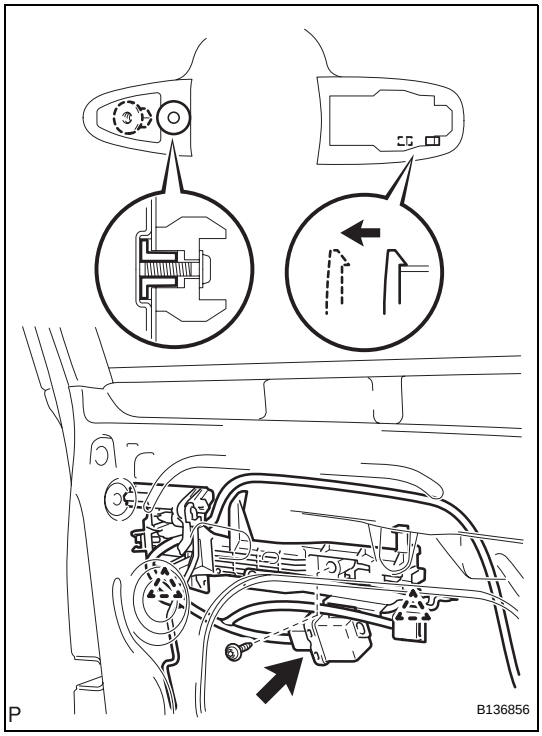

31. REMOVE FRONT DOOR OUTSIDE HANDLE FRAME SUB-ASSEMBLY (w/ Smart Key System)

(a) Using a "torx" socket wrench (T30), remove the screw.

(b) Disconnect the connector.

(c) Disengage the 2 clamps.

(d) Disengage the claws and remove the front door outside handle frame sub-assembly.

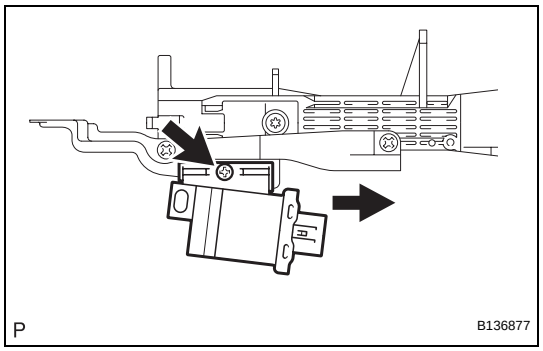

32. REMOVE DOOR ELECTRICAL KEY OSCILLATOR (w/ Smart Key System)

(a) Remove the screw and door electrical key oscillator.

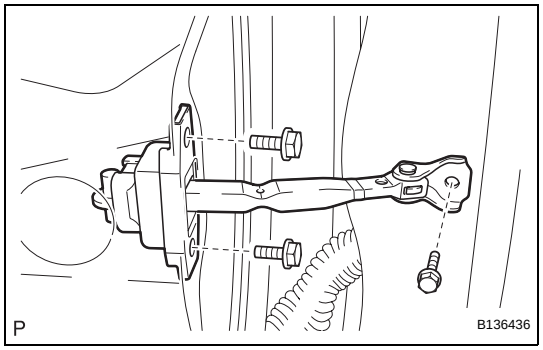

33. REMOVE FRONT DOOR CHECK ASSEMBLY (for TMC Made)

(a) Remove the 3 bolts and the front door check assembly.

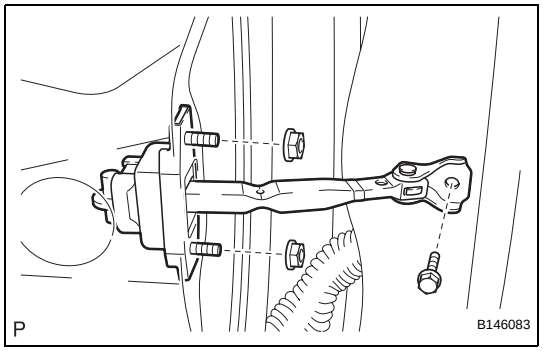

34. REMOVE FRONT DOOR CHECK ASSEMBLY (for TMMK Made)

(a) Remove the bolt, 2 nuts, and the front door check assembly.

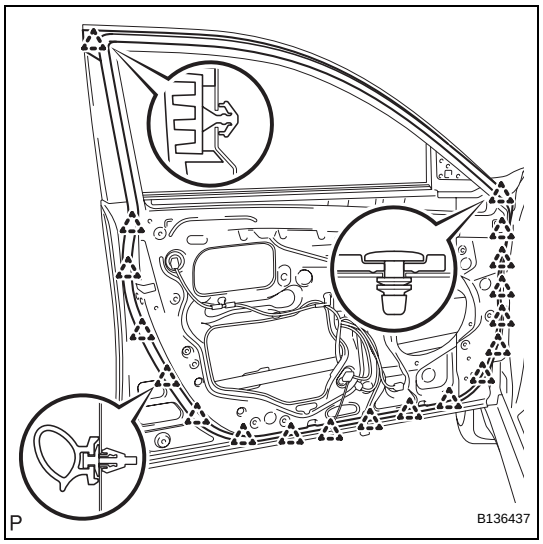

35. REMOVE FRONT DOOR WEATHERSTRIP

(a) Using the clip remover, disengage the 19 clips and remove the front door weatherstrip.

36. REMOVE FRONT DOOR BELT MOULDING ASSEMBLY (See page ET-34)

37. REMOVE FRONT DOOR REAR WINDOW FRAME MOULDING (See page ET-48)

38. REMOVE FRONT DOOR UPPER WINDOW FRAME MOULDING (See page ET-49)

39. REMOVE FRONT DOOR STRIPE (See page ET-67)

40. REMOVE FRONT DOOR LOWER OUTSIDE STRIPE (See page ET-67)

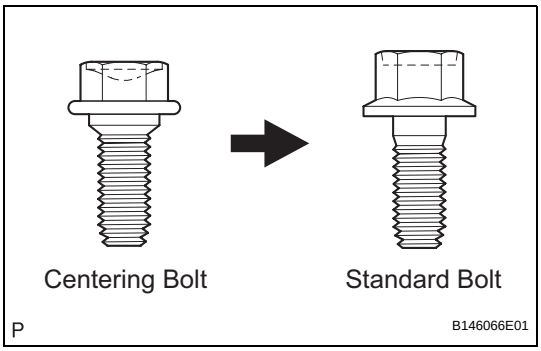

ADJUSTMENT

HINT:

- Before adjusting the door position for vehicles equipped with side airbags and curtain shield airbags, be sure to disconnect the battery. After adjustment, inspect the SRS warning light, the side airbag system, and the curtain shield airbag system for normal operation. Then initialize both airbag systems.
- Use the same procedures for the RH side and LH side.
- The procedures listed below are for the LH side.
- Centering bolts are used to mount the door hinge to the vehicle body and door. The door cannot be adjusted with the centering bolts on. Substitute the centering bolts with standard bolts (with washers) when making adjustment.
- A bolt without a torque specification is shown in the standard bolt chart (See page SS-2).

1. DISCONNECT CABLE FROM NEGATIVE BATTERY TERMINAL

CAUTION:

Wait for 90 seconds after disconnecting the cable to prevent airbag deployment (See page IR-22).

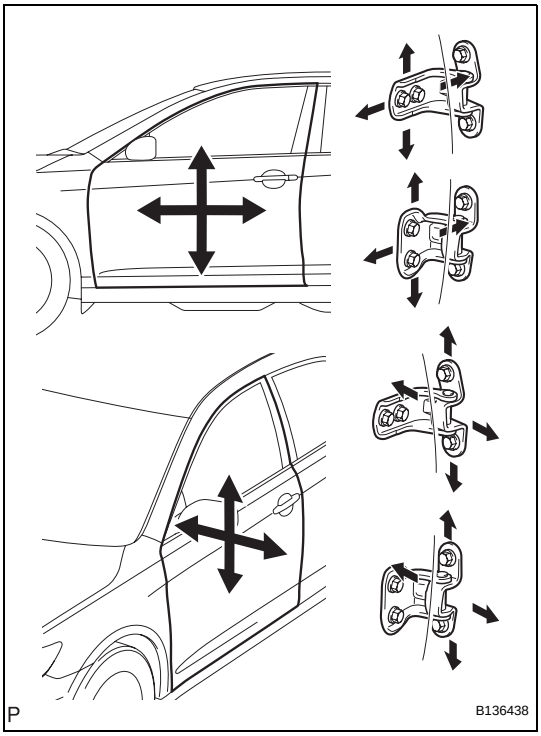

2. ADJUST FRONT DOOR

(a) Using SST, loosen the body's hinge bolts and adjust the door position.
SST 09812-00010

(b) Tighten the body's hinge bolts after the adjustment.
Torque: 26 N*m (265 kgf*cm, 19 ft.*lbf)

(c) Loosen the door's hinge bolts and adjust the door position.

(d) Tighten the door's hinge bolts after the adjustment.
Torque: 26 N*m (265 kgf*cm, 19 ft.*lbf)

ED

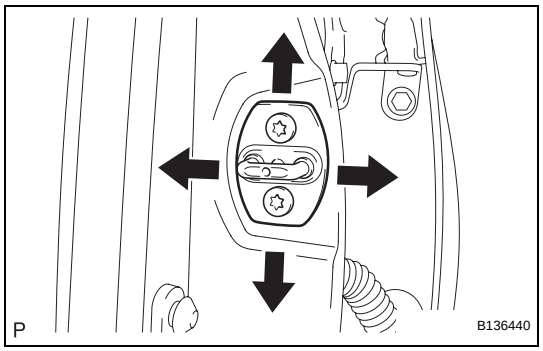

(e) Using a "torx" socket wrench (T40), adjust the striker position by slightly loosening the striker mounting screws and hitting the striker with a plastic hammer.

(f) Using a "torx" socket wrench (T40), tighten the striker mounting screws after the adjustment.
Torque: 23 N*m (235 kgf*cm, 17 ft.*lbf)

3. CONNECT CABLE TO NEGATIVE BATTERY TERMINAL

4. INSPECT SRS WARNING LIGHT
(See page IR-58)

ED

REASSEMBLY

1. **REPAIR INSTRUCTION (See page ET-68)**
2. **INSTALL FRONT DOOR LOWER OUTSIDE STRIPE (See page ET-71)**
3. **INSTALL FRONT DOOR STRIPE (See page ET-71)**
4. **INSTALL FRONT DOOR UPPER WINDOW FRAME MOULDING (See page ET-49)**
5. **INSTALL FRONT DOOR REAR WINDOW FRAME MOULDING (See page ET-50)**
6. **INSTALL FRONT DOOR BELT MOULDING ASSEMBLY (See page ET-34)**
7. **INSTALL FRONT DOOR WEATHERSTRIP**
   (a) Engage the 19 clips to install a new front door weatherstrip.

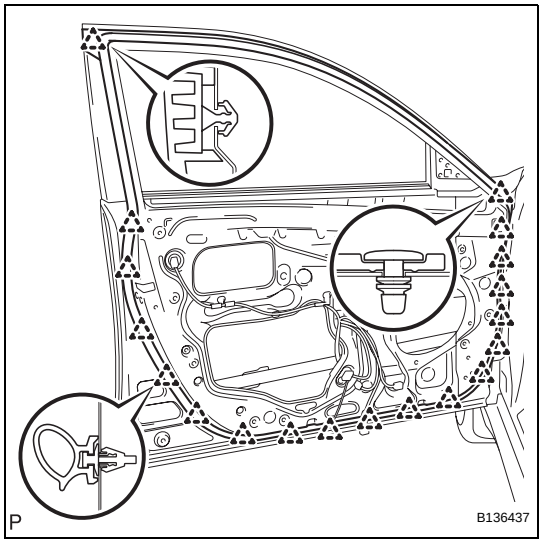

8. **INSTALL FRONT DOOR CHECK ASSEMBLY (for TMC Made)**
   (a) Install the front door check assembly with the 3 bolts.
   Torque: Bolt (A)
   26 N*m (265 kgf*cm, 19 ft.*lbf)
   Torque: Bolt (B)
   8.0 N*m (82 kgf*cm, 71 in.*lbf)

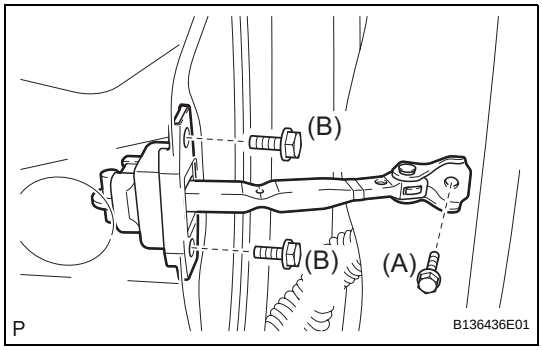

9. **INSTALL FRONT DOOR CHECK ASSEMBLY (for TMMK Made)**
   (a) Install the front door check assembly with the bolt and 2 nuts.
   Torque: Bolt
   26 N*m (265 kgf*cm, 19 ft.*lbf)
   Torque: Nut
   8.0 N*m (82 kgf*cm, 71 in.*lbf)

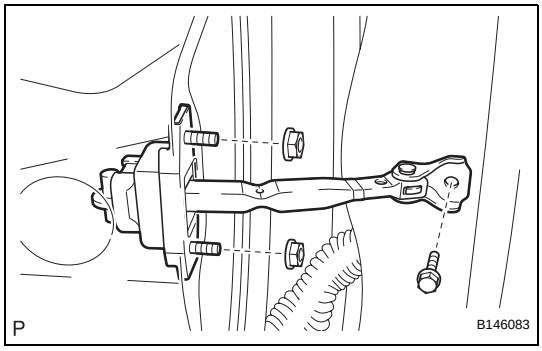

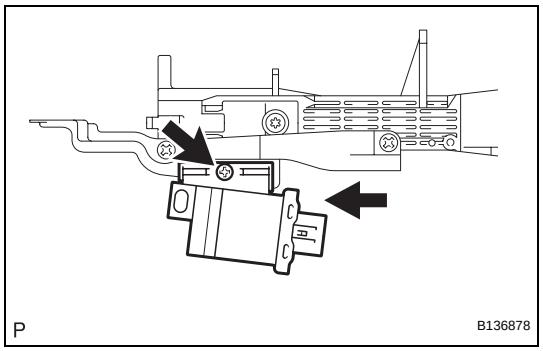

10. INSTALL DOOR ELECTRICAL KEY OSCILLATOR (w/ Smart Key System)

(a) Install the door electrical key oscillator with the screw.

11. INSTALL FRONT DOOR OUTSIDE HANDLE FRAME SUB-ASSEMBLY (w/o Smart Key System)

(a) Apply MP grease to the sliding parts on the front door outside handle frame sub-assembly.

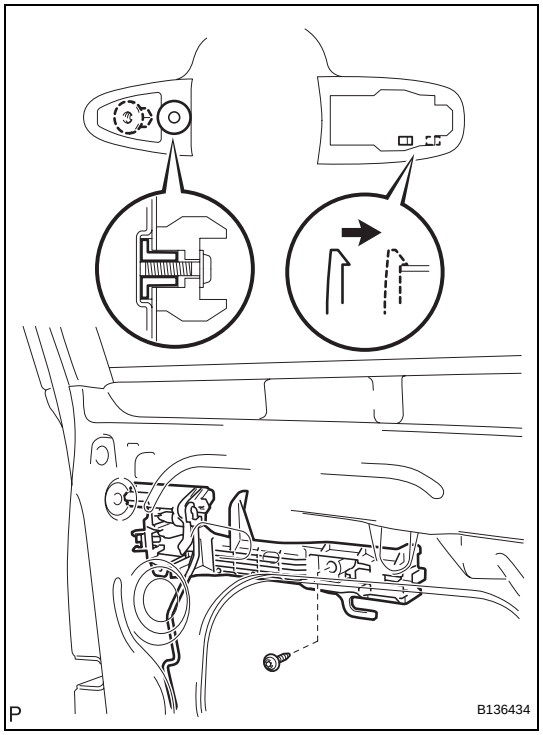

(b) Install the front door outside handle frame sub-assembly with the claw.

(c) Using a "torx" socket wrench (T30), install the front door outside handle frame sub-assembly with the screw.
Torque: 4.0 N*m (41 kgf*cm, 35 in.*lbf)

12. INSTALL FRONT DOOR OUTSIDE HANDLE FRAME SUB-ASSEMBLY (w/ Smart Key System)

(a) Apply MP grease to the sliding parts on the front door outside handle frame sub-assembly.

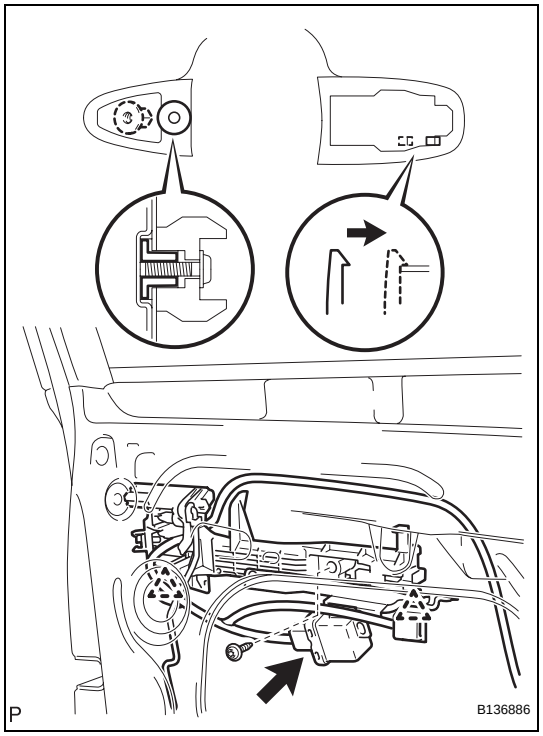

(b) Install the front door outside handle frame sub-assembly with the claw.

(c) Using a "torx" socket wrench (T30), install the front door outside handle frame sub-assembly with the screw.
Torque: 4.0 N*m (41 kgf*cm, 35 in.*lbf)

(d) Engage the 2 clamps.

(e) Connect the connector.

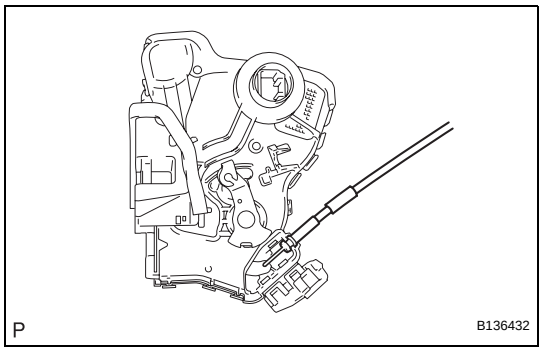

13. INSTALL FRONT DOOR INSIDE LOCKING CABLE ASSEMBLY

(a) Install the front door inside locking cable assembly.

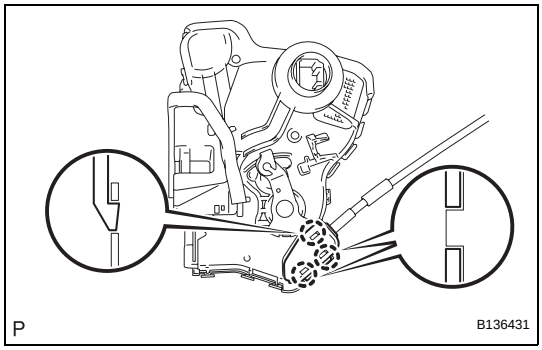

(b) Engage the 3 claws.

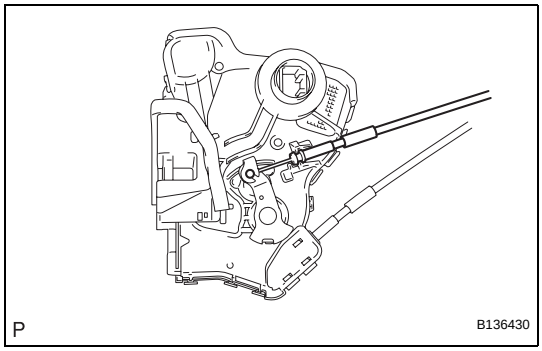

14. INSTALL FRONT DOOR LOCK REMOTE CONTROL CABLE ASSEMBLY

(a) Install the front door lock remote control cable assembly.

15. INSTALL FRONT DOOR LOCK ASSEMBLY

NOTICE:

- **When reusing the removed front door lock assembly, replace the door lock wire harness sealing on the connector with a new one.**
- **Do not allow grease or dust to adhere on the door lock wiring harness sealing surface of the connector.**
- **Reusing the door lock wiring harness sealing and/or using damaged door lock wiring harness sealing may cause water intrusion to the connection. This may result in a malfunction in the front door lock assembly.**

(a) Apply MP grease to the sliding parts on the front door lock assembly.

(b) Install a new door lock wiring harness sealing to front door lock assembly.

ED

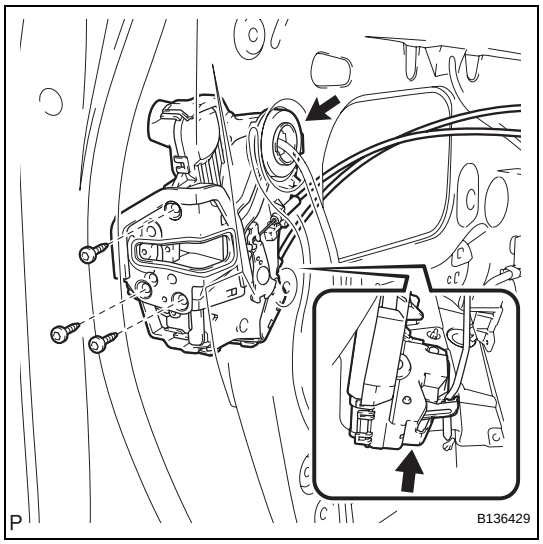

(c) Insert the front door lock open rod to the front door lock assembly, and set it to the front door outside handle frame.
(d) Make sure that the front door lock open rod is securely connected to the front door lock assembly.
(e) Using a "torx" socket wrench (T30), install the front door lock assembly with the 3 screws.
Torque: 5.0 N*m (51 kgf*cm, 44 in.*lbf)
(f) Connect the connector.

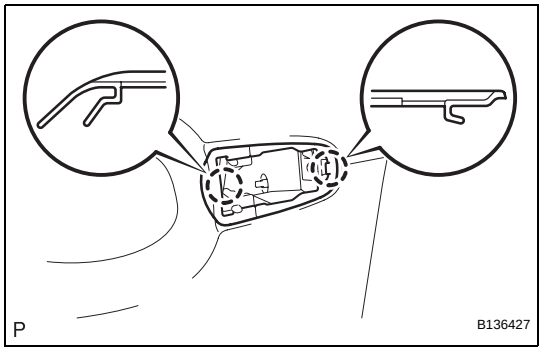

16. INSTALL FRONT DOOR REAR OUTSIDE HANDLE PAD
(a) Attach the 2 claws to install the front door rear outside handle pad.

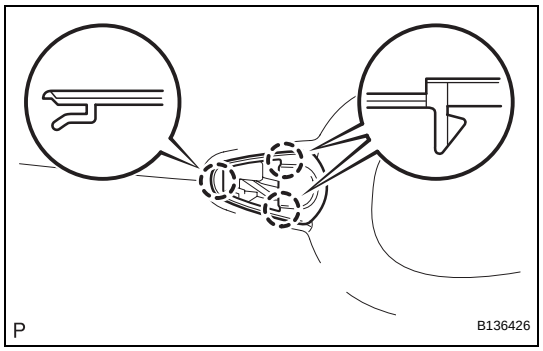

17. INSTALL FRONT DOOR FRONT OUTSIDE HANDLE PAD
(a) Attach the 3 claws to install the front door front outside handle pad.

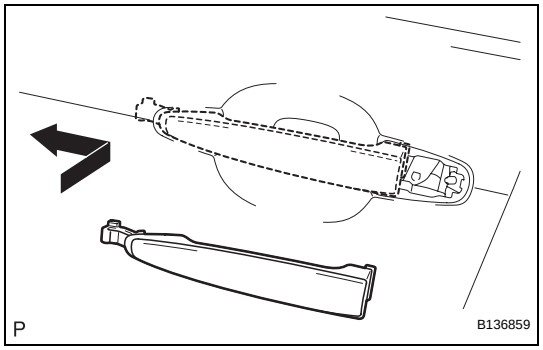

18. INSTALL FRONT DOOR OUTSIDE HANDLE ASSEMBLY (w/o Smart Key System)
(a) Insert the front end of the front door outside handle assembly into the front door outside handle frame.
(b) Insert the rear end of the front door outside handle assembly into the front door outside handle frame. Next slide the front door outside handle assembly to the front of the vehicle to install it.

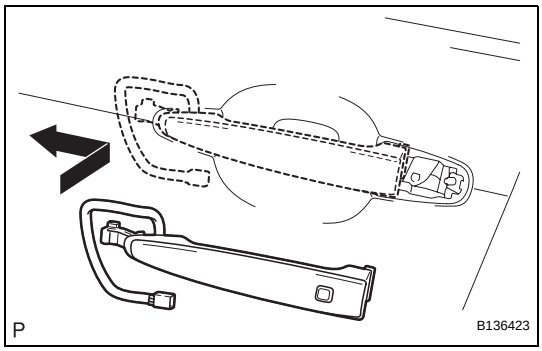

19. INSTALL FRONT DOOR OUTSIDE HANDLE ASSEMBLY (w/ Smart Key System)

(a) Insert the front end of the front door outside handle assembly into the front door outside handle frame.

(b) Insert the rear end of the front door outside handle assembly into the front door outside handle frame. Next slide the front door outside handle assembly to the front of the vehicle to install it.

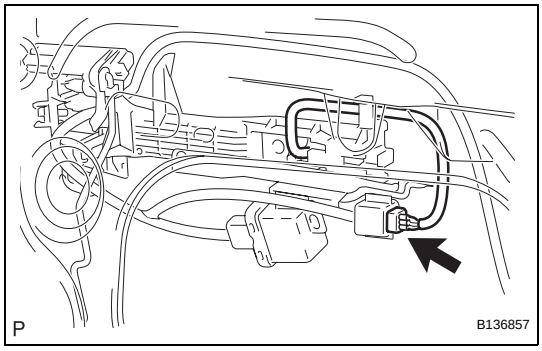

(c) Connect the connector.

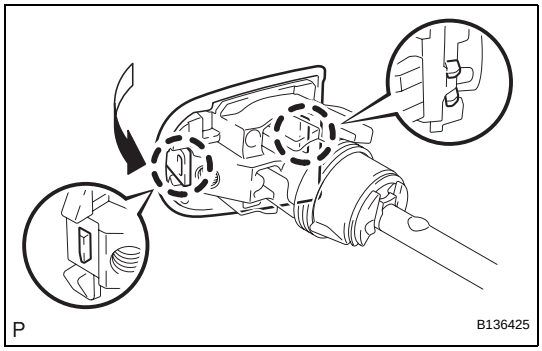

20. INSTALL FRONT DOOR OUTSIDE HANDLE COVER

(a) Engage the 2 claws of the front door outside handle cover to the front door lock cylinder to install the cover.

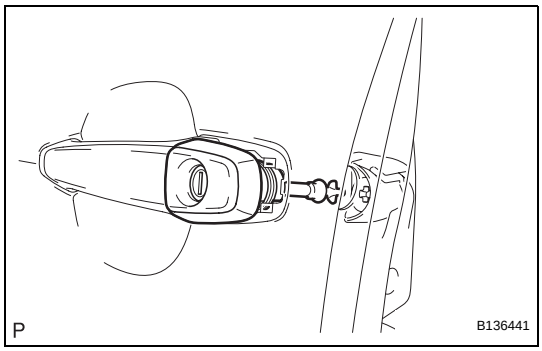

(b) Install the front door lock cylinder.
HINT:
Make sure that the front door lock cylinder rod is inserted into the front door lock assembly.

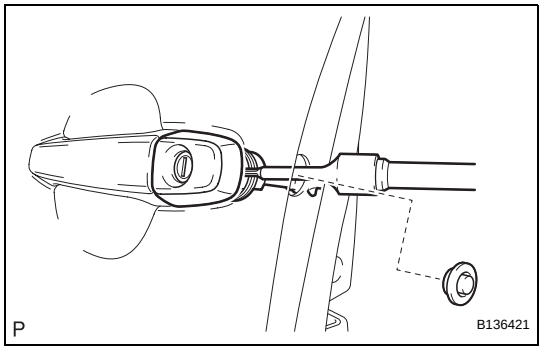

(c) Using a "torx" socket wrench (T30), install the front door lock cylinder with the screw.
Torque: 4.0 N*m (41 kgf*cm, 35 in.*lbf)

(d) Install the hole plug.

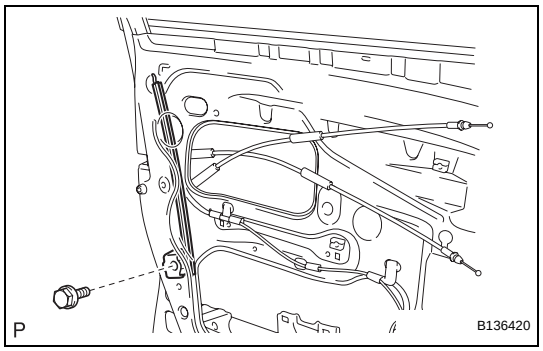

21. INSTALL FRONT DOOR REAR LOWER FRAME SUB-ASSEMBLY

(a) Install the front door rear lower frame sub-assembly with the bolt.

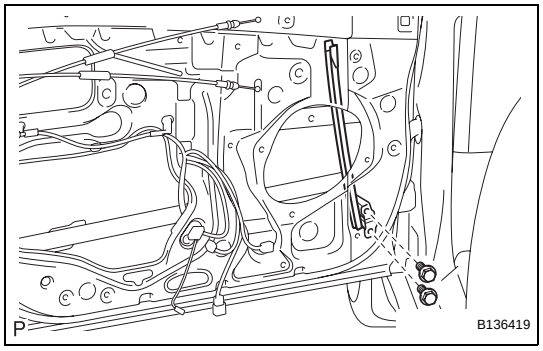

22. INSTALL FRONT DOOR FRONT LOWER FRAME SUB-ASSEMBLY

(a) Install the front door front lower frame sub-assembly with the 2 bolts.

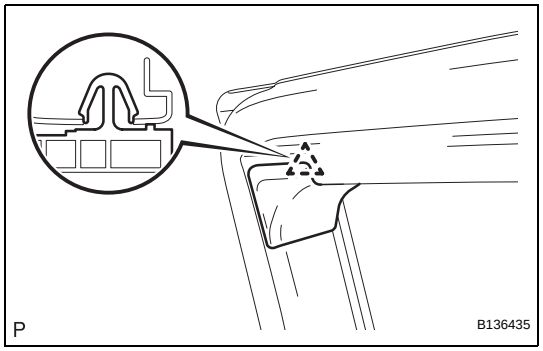

23. INSTALL DOOR FRAME GARNISH

(a) Engage the clip and install a new door frame garnish.

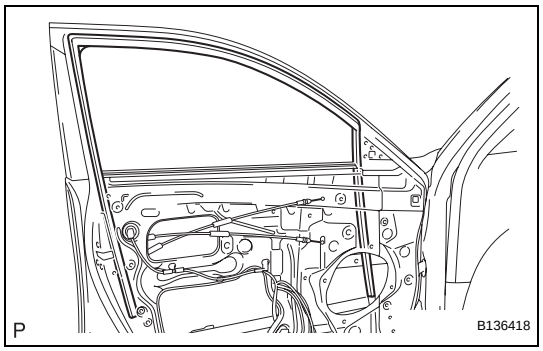

24. INSTALL FRONT DOOR GLASS RUN

(a) Install the front door glass run.

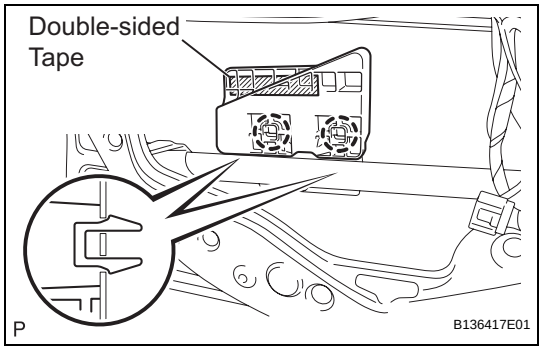

25. INSTALL FRONT NO. 1 DOOR STIFFENER CUSHION

(a) Engage the 2 claws and install a new front No. 1 door stiffener cushion with the double-sided tape.

26. INSTALL FRONT POWER WINDOW REGULATOR MOTOR ASSEMBLY

NOTICE:

The regulator arm must be below the intermediate position when installing the power window regulator motor.

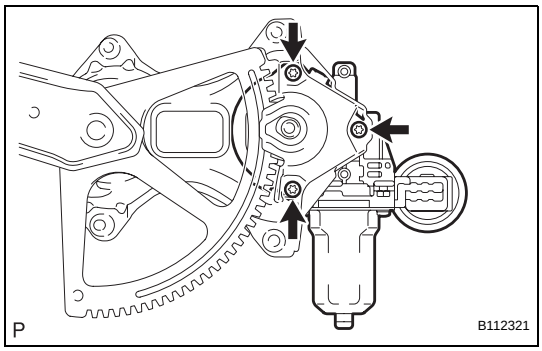

(a) Using a "torx" driver (T25), install the front power window regulator motor sub-assembly with the 3 screws.
Torque: 5.4 N*m (55 kgf*cm, 48 in.*lbf)
HINT:
A new front window regulator adopts a self-tapping method. The installation position of the regulator will be threaded when the self-tapping screw is inserted.

27. INSTALL FRONT DOOR WINDOW REGULATOR SUB-ASSEMBLY

(a) Apply MP grease to the sliding parts on the front door window regulator sub-assembly.

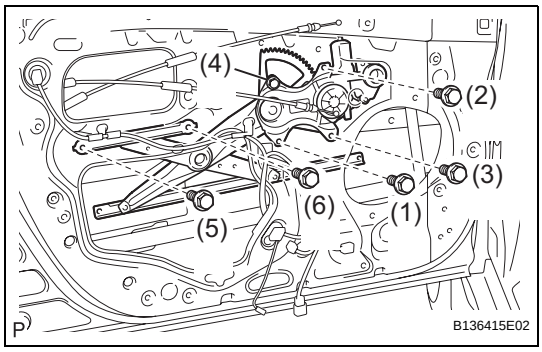

(b) Install the temporary bolt to the front door window regulator sub-assembly.
(c) Temporarily install the window regulator.
(d) Tighten the 6 bolts in the order shown in the illustration to install the front window regulator.
Torque: 8.0 N*m (82 kgf*cm, 71 in.*lbf)

28. INSTALL FRONT DOOR GLASS SUB-ASSEMBLY

(a) Insert the front door glass sub-assembly into the front door panel along the front door glass run as indicated by the arrows in the illustration.

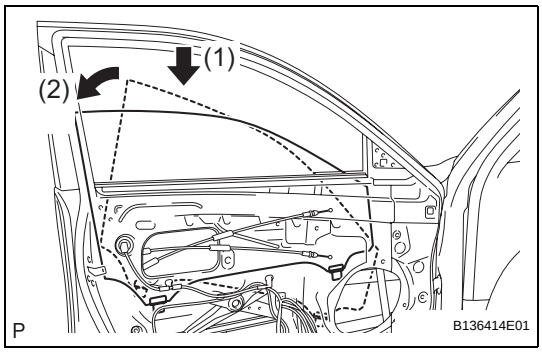

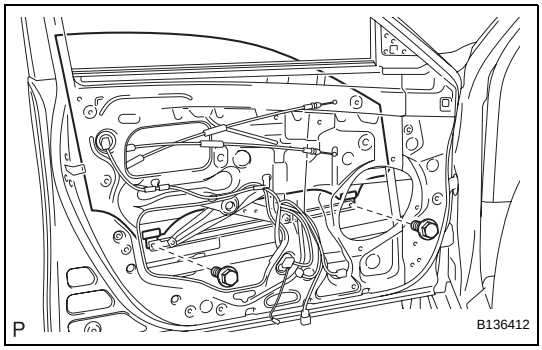

(b) Install the front door glass sub-assembly with the 2 bolts.
Torque: 5.5 N*m (56 kgf*cm, 49 in.*lbf)

29. INSTALL FRONT DOOR SERVICE HOLE COVER

(a) Apply butyl tape to the front door panel.
(b) Pass the front door lock remote control cable and rear door inside locking cable through a new front door service hole cover.

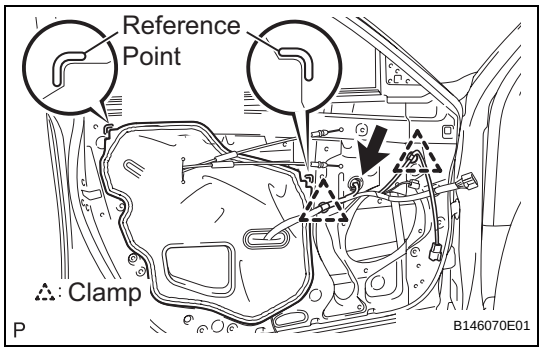

(c) Install a new service hole cover.
NOTICE:
Securely install the front door service hole cover avoiding wrinkles and air bubbles.
(d) Connect each connector and each clamp.

30. INSTALL OUTER REAR VIEW MIRROR ASSEMBLY (See page MI-17)

31. INSTALL FRONT NO. 1 SPEAKER ASSEMBLY (See page AV-157)

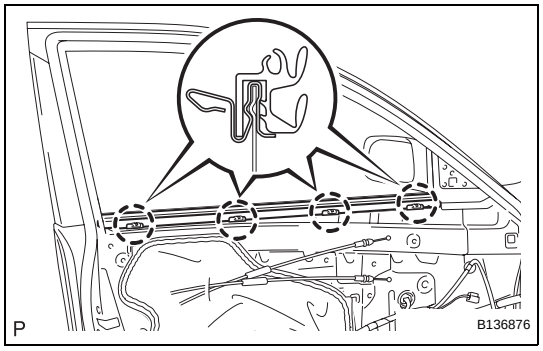

32. INSTALL FRONT DOOR INNER GLASS WEATHERSTRIP
(a) Engage the 4 claws and install the front door inner glass weatherstrip.

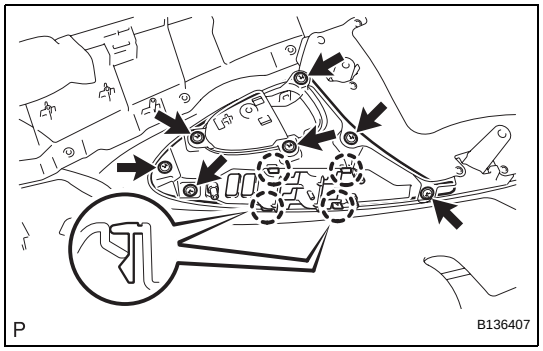

33. INSTALL FRONT ARMREST BASE PANEL UPPER
(a) Engage the 4 claws and install the front armrest base panel upper.
(b) Install the 7 screws.

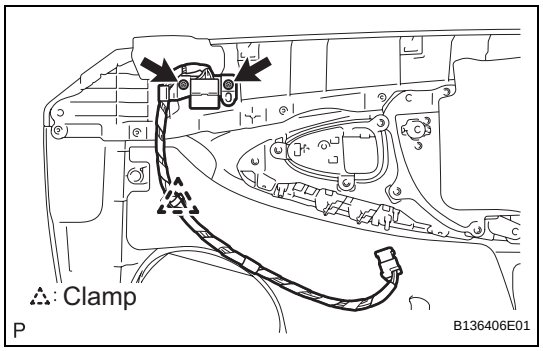

34. INSTALL FRONT DOOR WIRE (for Driver Side)
(a) Install the front door wire with the 2 screws.
(b) Engage the clamp.

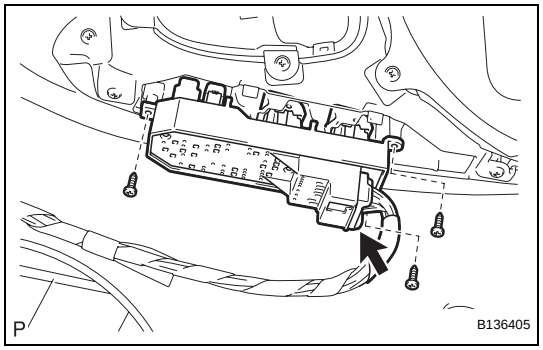

35. INSTALL POWER WINDOW REGULATOR MASTER SWITCH ASSEMBLY
(a) Connect the connector.
(b) Install the power window regulator master switch assembly with the 3 screws.

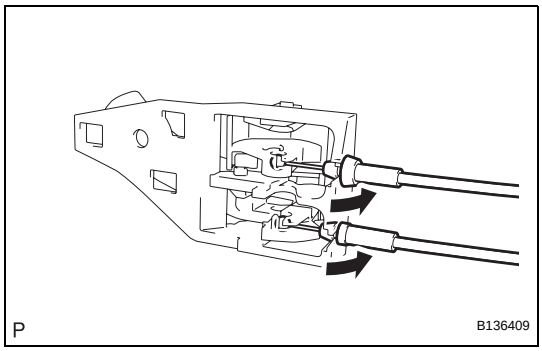

36. INSTALL FRONT DOOR INSIDE HANDLE SUB-ASSEMBLY

(a) Connect the front door lock remote control cable and front door inside locking cable to the front door inside handle sub-assembly.

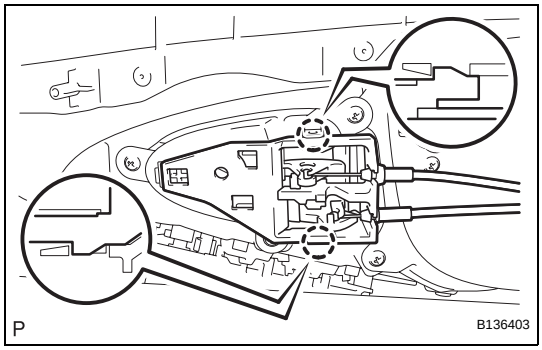

(b) Engage the 2 claws and install the front door inside handle sub-assembly.

37. INSTALL FRONT DOOR TRIM BOARD SUB-ASSEMBLY

(a) Connect each connector.

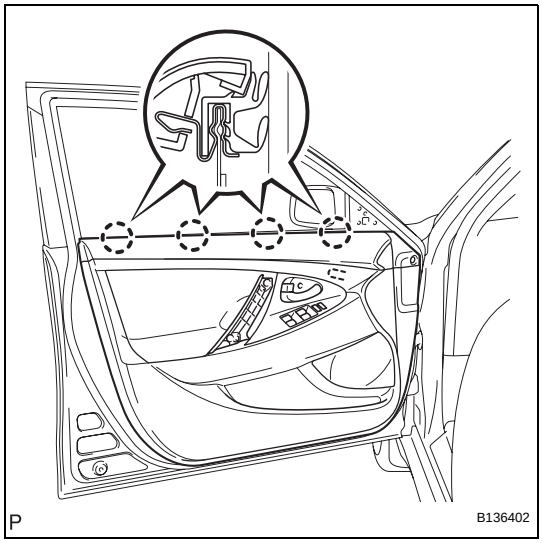

(b) Engage the front door trim board with the 4 clips of the front door inner glass weatherstrip.

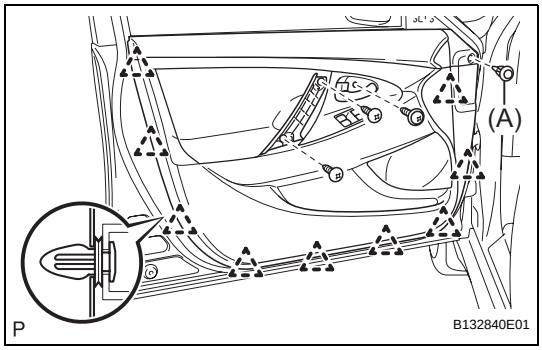

(c) Engage the 9 clips and install the front door trim board to the front door panel.

(d) Install the 3 screws and clip (A).

38. INSTALL COURTESY LIGHT ASSEMBLY

(a) Connect the connector.

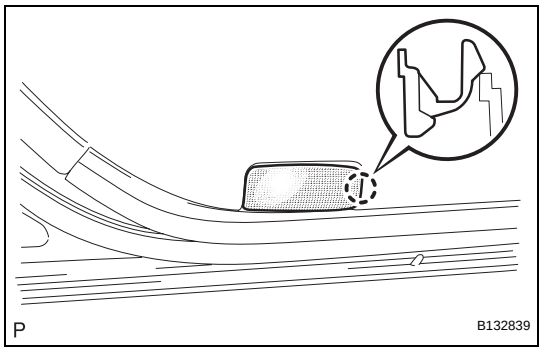

(b) Engage the claw and install the courtesy light assembly.

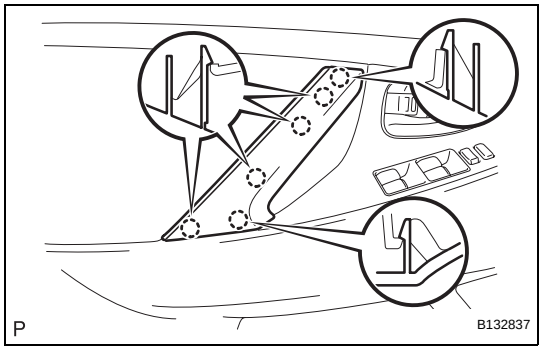

39. INSTALL ASSIST GRIP COVER

(a) Engage the 6 claws and install the assist grip cover.

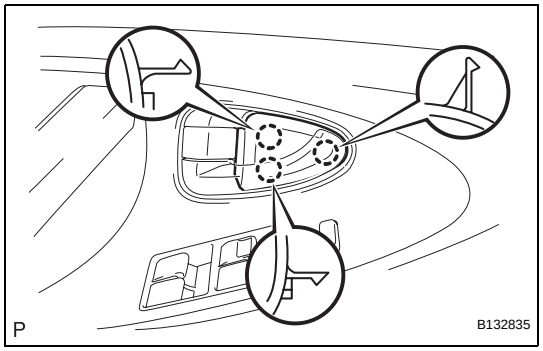

40. INSTALL FRONT DOOR INSIDE HANDLE BEZEL PLUG

(a) Engage the 3 claws and install the front door inside handle bezel plug.

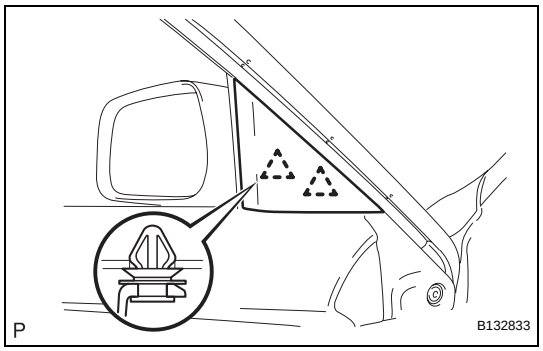

41. INSTALL FRONT DOOR LOWER FRAME BRACKET GARNISH

(a) Engage the 2 clips and install the front door lower frame bracket garnish.

42. INITIALIZE POWER WINDOW CONTROL SYSTEM

(See page WS-8)

REAR DOOR

COMPONENTS

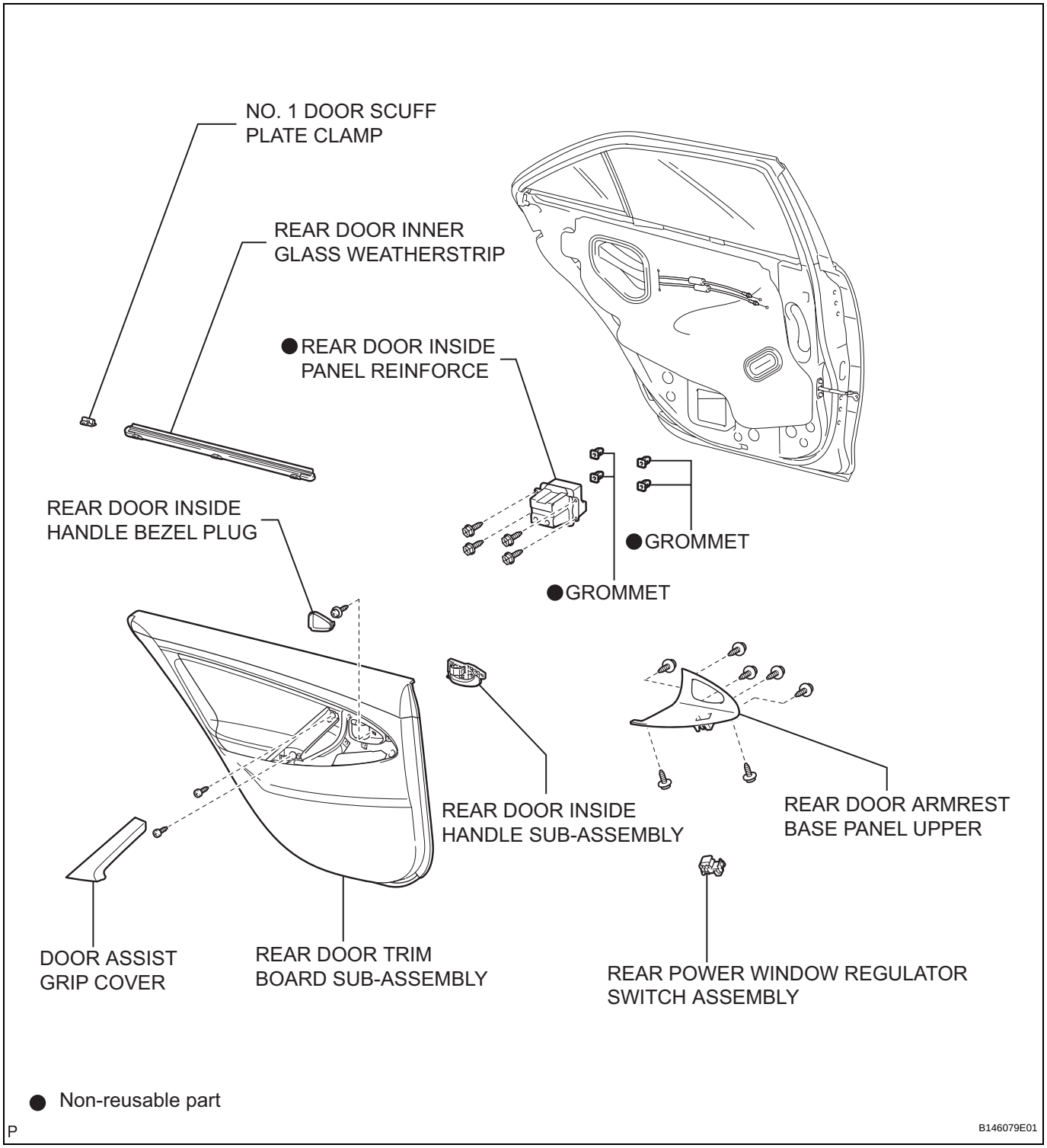

ED

ED

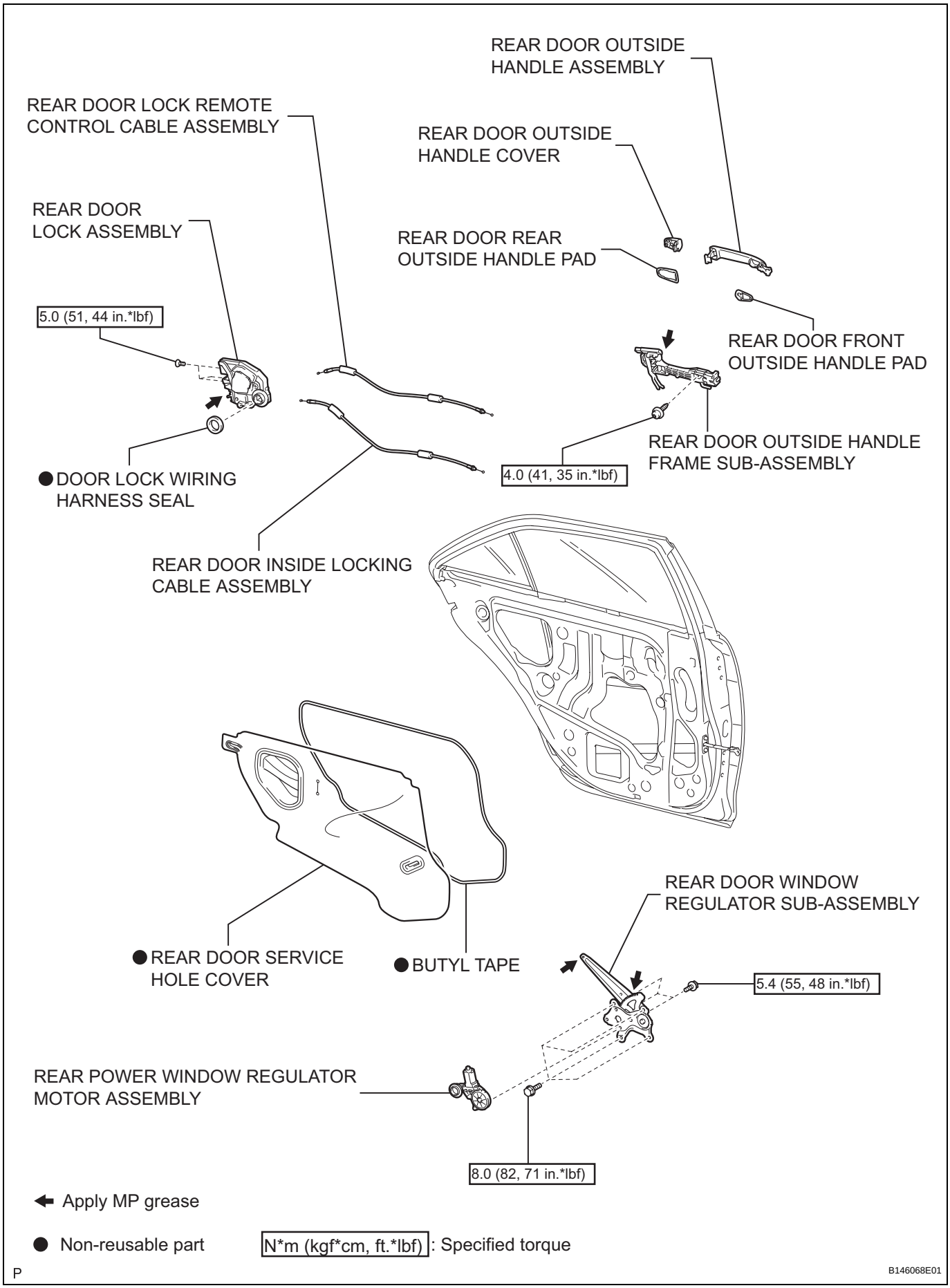
REAR DOOR OUTSIDE HANDLE ASSEMBLY
REAR DOOR LOCK REMOTE CONTROL CABLE ASSEMBLY
REAR DOOR OUTSIDE HANDLE COVER
REAR DOOR LOCK ASSEMBLY
REAR DOOR REAR OUTSIDE HANDLE PAD
5.0 (51, 44 in.*lbf)
REAR DOOR FRONT OUTSIDE HANDLE PAD
REAR DOOR OUTSIDE HANDLE FRAME SUB-ASSEMBLY
4.0 (41, 35 in.*lbf)
● DOOR LOCK WIRING HARNESS SEAL
REAR DOOR INSIDE LOCKING CABLE ASSEMBLY
REAR DOOR WINDOW REGULATOR SUB-ASSEMBLY
● REAR DOOR SERVICE HOLE COVER
● BUTYL TAPE
5.4 (55, 48 in.*lbf)
REAR POWER WINDOW REGULATOR MOTOR ASSEMBLY
8.0 (82, 71 in.*lbf)
Apply MP grease
● Non-reusable part
N*m (kgf*cm, ft.*lbf): Specified torque
P
B146068E01

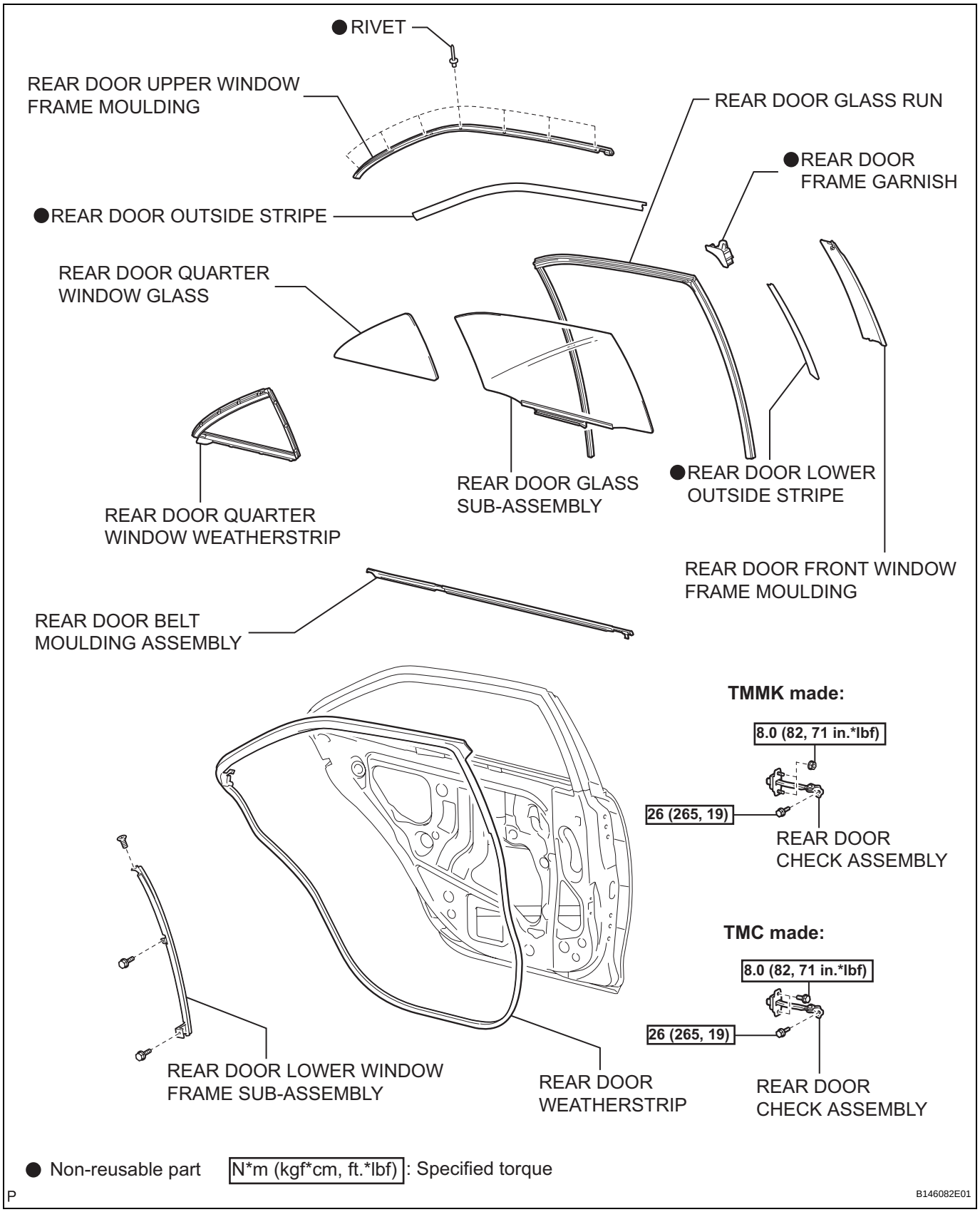

● Non-reusable part N*m (kgf*cm, ft.*lbf): Specified torque

P B146082E01

ED

ON-VEHICLE INSPECTION

1. INSPECT REAR DOOR PANEL SUB-ASSEMBLY

(a) Check that the clearance measurements of areas A to L are within each standard range.

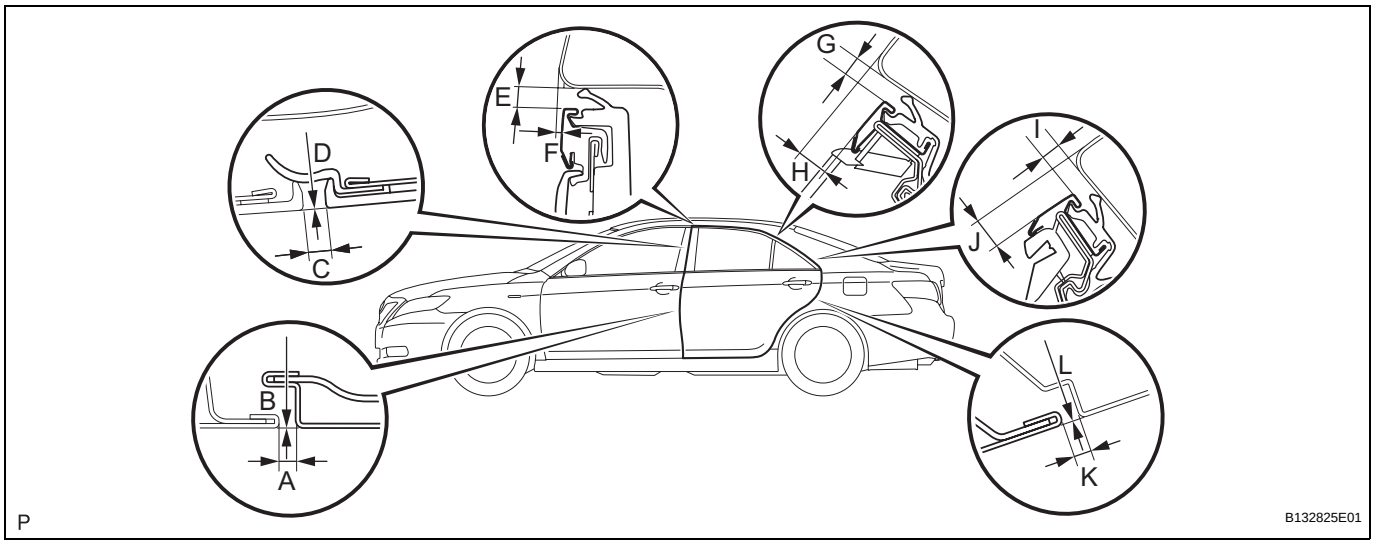

Standard clearance

Area	Measurement	Area	Measurement
A	2.7 to 5.7 mm (0.106 to 0.224 in.)	G	3.3 to 6.3 mm (0.130 to 0.248 in.)
B	-1.5 to 1.5 mm (-0.059 to 0.059 in.)	H	0 to 3.0 mm (0 to 0.118 in.)
C	2.3 to 6.3 mm (0.091 to 0.248 in.)	I	3.3 to 6.3 mm (0.130 to 0.248 in.)
D	-2.0 to 2.0 mm (-0.079 to 0.079 in.)	J	5.7 to 8.7 mm (0.224 to 0.343 in.)
E	3.3 to 6.3 mm (0.130 to 0.248 in.)	K	2.7 to 5.7 mm (0.106 to 0.224 in.)
F	-0.3 to 2.7 mm (0.012 to 0.106 in.)	L	-1.5 to 1.5 mm (-0.059 to 0.059 in.)

DISASSEMBLY

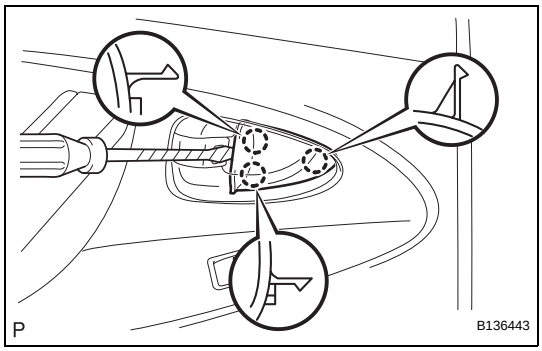

1. REMOVE REAR DOOR INSIDE HANDLE BEZEL PLUG

(a) Using a screwdriver wrapped with protective tape, disengage the 3 claws and remove the rear door inside handle bezel plug.

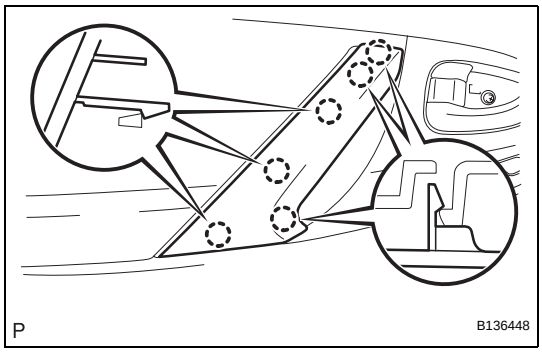

2. REMOVE DOOR ASSIST GRIP COVER

(a) Using a screwdriver wrapped with protective tape, disengage the 6 claws and remove the door assist grip cover.

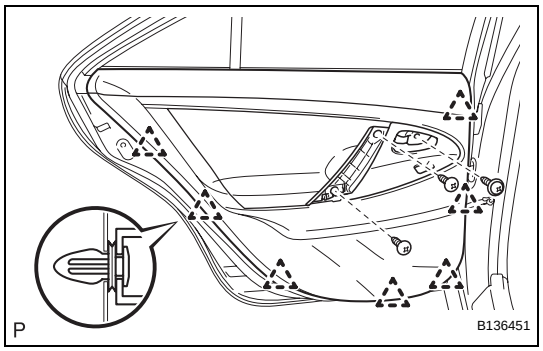

3. REMOVE REAR DOOR TRIM BOARD SUB-ASSEMBLY

(a) Remove the 3 screws.

(b) Using the clip remover, disengage the 7 clips.

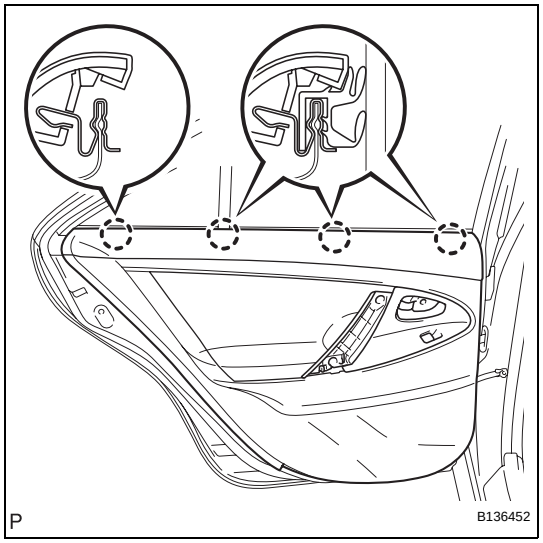

(c) Raise the rear door trim board to disengage the 4 claws and remove the rear door trim board together with the rear door inner glass weatherstrip.

(d) Disconnect the connector.

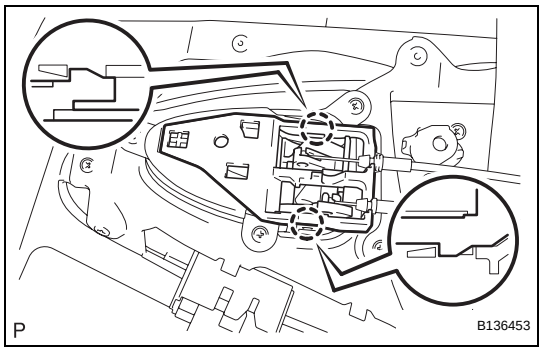

(e) Disengage the 2 claws and disconnect the rear door inside handle sub-assembly.

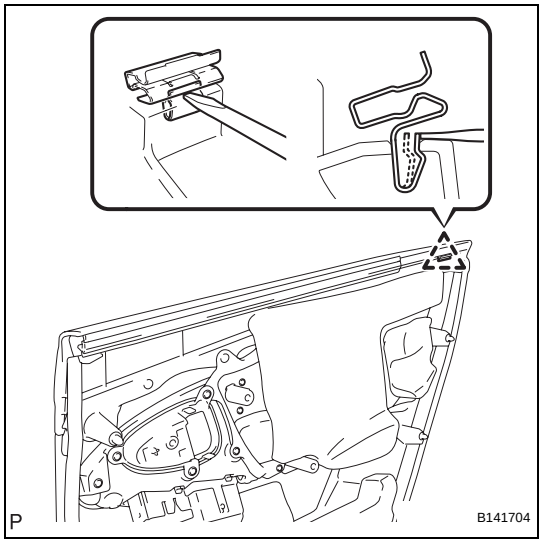

(f) Disengage the clip as shown in the illustration and remove the No. 1 door scuff plate clamp from the rear door trim board.

4. REMOVE REAR POWER WINDOW REGULATOR SWITCH ASSEMBLY

(a) Disconnect the connector.

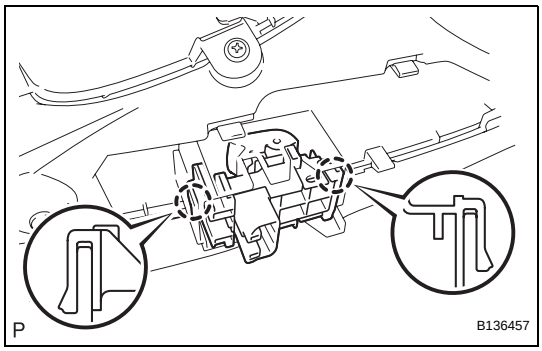

(b) Using a screwdriver wrapped with protective tape, disengage the 2 claws and remove the rear power window regulator switch assembly.

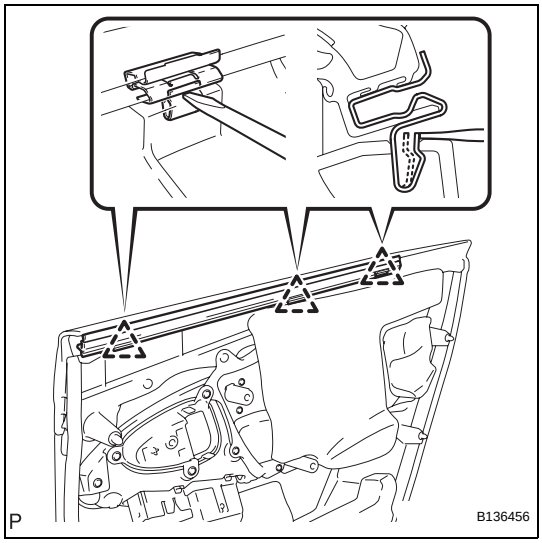

5. REMOVE REAR DOOR INNER GLASS WEATHERSTRIP

(a) Disengage the 3 clips as shown in the illustration and remove the rear door inner glass weatherstrip from the rear door trim board.

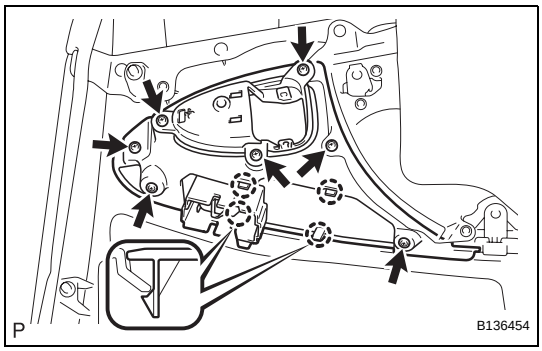

6. REMOVE REAR DOOR ARMREST BASE PANEL UPPER

(a) Remove the 7 screws.

(b) Disengage the 4 claws and remove the rear door armrest base panel upper.

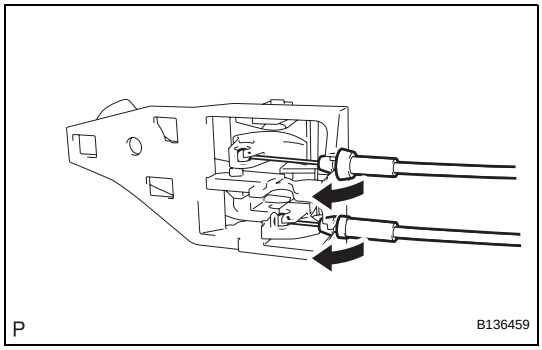

7. REMOVE REAR DOOR INSIDE HANDLE SUB-ASSEMBLY

(a) Disconnect the cables and remove the rear door inside handle sub-assembly.

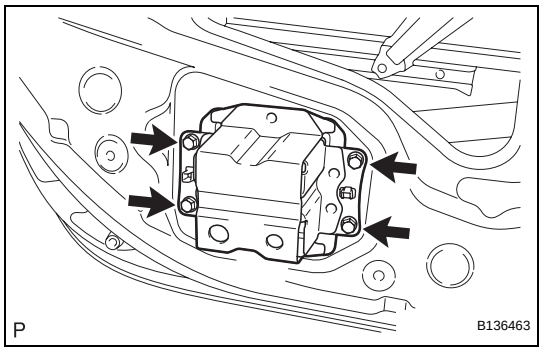

8. REMOVE REAR DOOR INSIDE PANEL REINFORCE

(a) Remove the 4 screws and the rear door inside panel reinforce.

(b) Remove the 4 grommets.

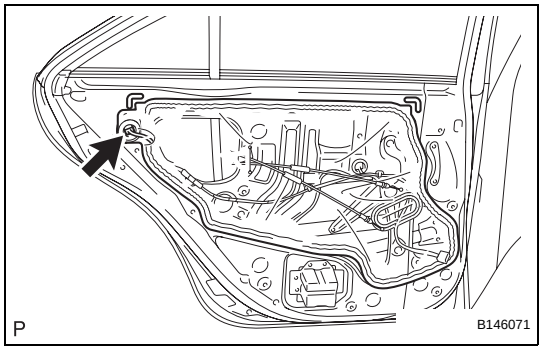

9. REMOVE REAR DOOR SERVICE HOLE COVER

(a) Disconnect the connector.

(b) Remove the rear door service hole cover.
HINT:
Remove the remaining tape on the door side.

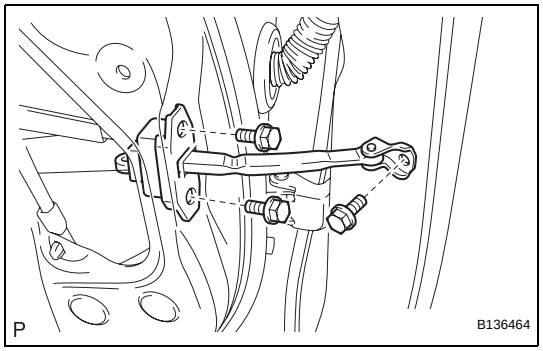

10. REMOVE REAR DOOR CHECK ASSEMBLY (for TMC Made)

(a) Remove the 3 bolts and the rear door check assembly.

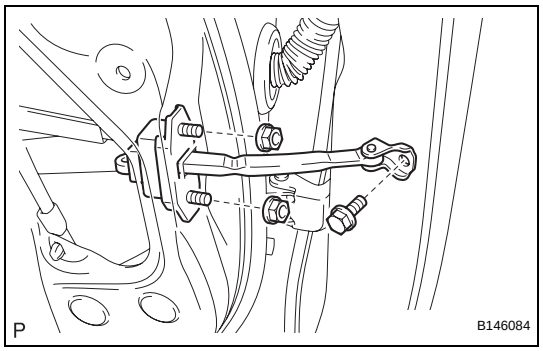

11. REMOVE REAR DOOR CHECK ASSEMBLY (for TMMK Made)

(a) Remove the bolt, 2 nuts, and the rear door check assembly.

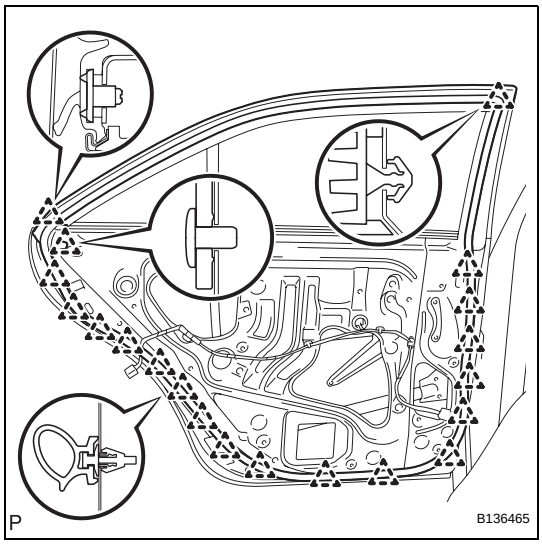

12. REMOVE REAR DOOR WEATHERSTRIP

(a) Using the clip remover, disengage the 20 clips and remove the rear door weatherstrip.

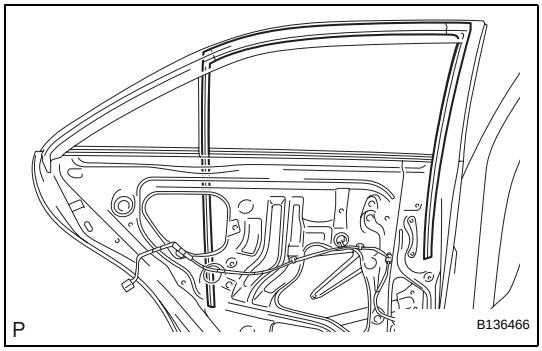

13. REMOVE REAR DOOR GLASS RUN

(a) Remove the rear door glass run.

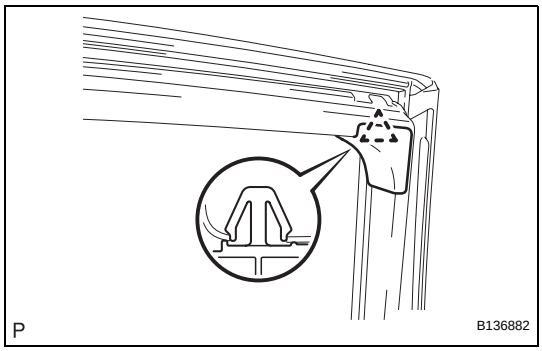

14. REMOVE REAR DOOR FRAME GARNISH

(a) Disengage the clip and remove the rear door frame garnish.

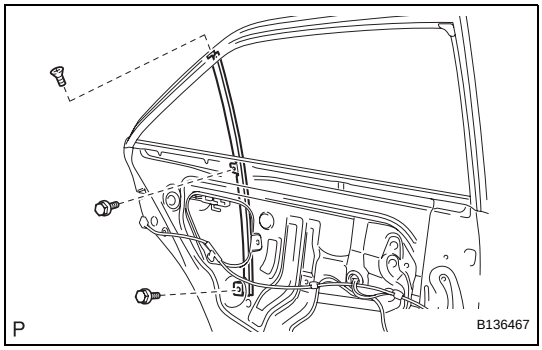

15. REMOVE REAR DOOR LOWER WINDOW FRAME SUB-ASSEMBLY

(a) Remove the 2 bolts, the screw, and the rear door lower window frame sub-assembly.

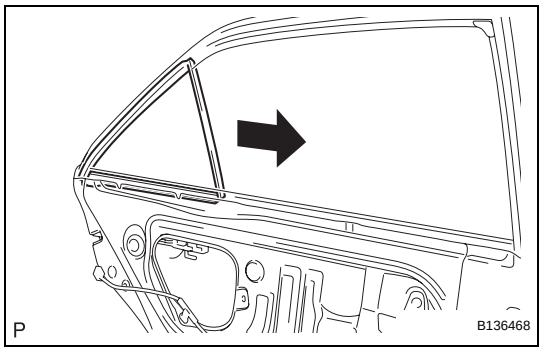

16. REMOVE REAR DOOR QUARTER WINDOW GLASS

(a) Remove the rear door quarter window glass and the rear door quarter window weatherstrip as a unit as shown in the illustration.

(b) Remove the rear door quarter window glass from the rear door quarter window weatherstrip.

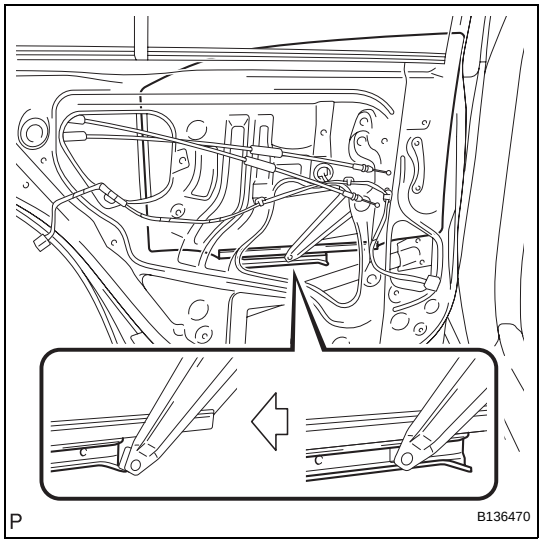

17. REMOVE REAR DOOR GLASS SUB-ASSEMBLY

(a) Remove the rear door glass sub-assembly from the rear door window regulator sub-assembly as shown in the illustration.

NOTICE:

Do not damage the door glass.

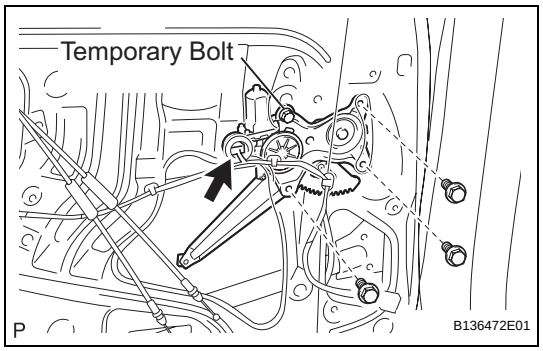

18. REMOVE REAR DOOR WINDOW REGULATOR SUB-ASSEMBLY

(a) Disconnect the connector.

(b) Loosen the temporary bolt.

NOTICE:

If the temporary bolt is removed, the rear door window regulator may fall and become deformed.

(c) Remove the 3 bolts.

(d) Remove the rear door window regulator sub-assembly and the power window regulator motor assembly rear as a unit.

(e) Remove the temporary bolt from the rear door window regulator.

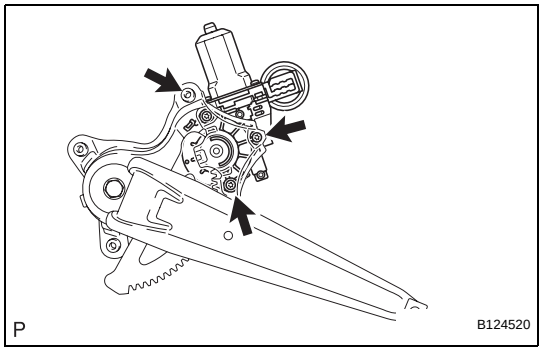

19. REMOVE REAR POWER WINDOW REGULATOR MOTOR ASSEMBLY

(a) Using a "torx" driver (T25), remove the 3 screws and the rear power window regulator motor assembly.

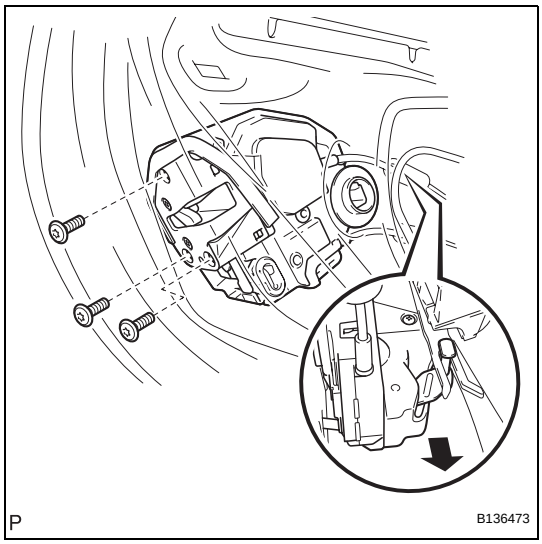

20. REMOVE REAR DOOR LOCK ASSEMBLY

(a) Using a "torx" socket wrench (T30), remove the 3 screws.

(b) Move the rear door lock assembly downward and pull the release plate out of the rear door outside handle frame.

(c) Remove the door lock wiring harness sealing from the rear door lock assembly.

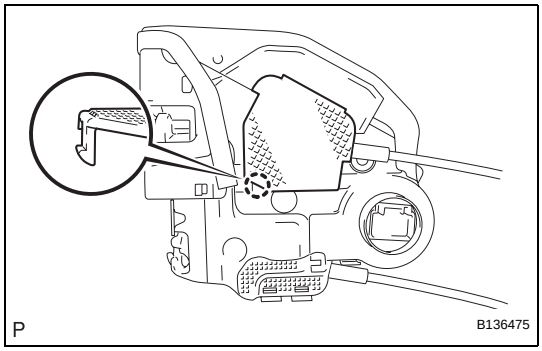

21. REMOVE REAR DOOR LOCK REMOTE CONTROL CABLE ASSEMBLY

(a) Using a screwdriver, disengage the claw.
HINT:
Tape the screwdriver tip before use.

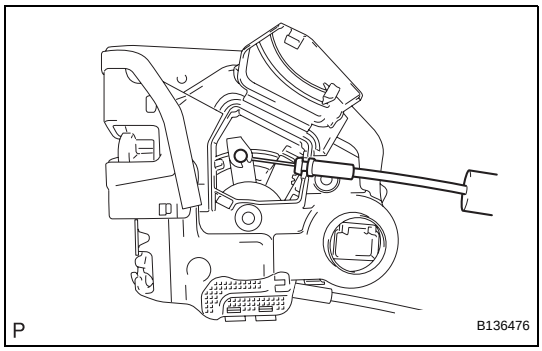

(b) Remove the rear door lock remote control cable assembly.

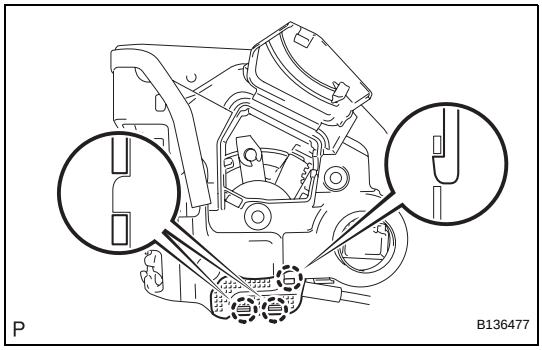

22. REMOVE REAR DOOR INSIDE LOCKING CABLE ASSEMBLY

(a) Using a screwdriver, disengage the 3 claws.
HINT:
Tape the screwdriver tip before use.

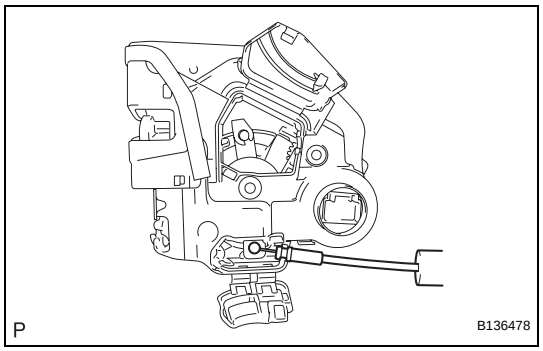

(b) Remove the rear door inside locking cable assembly.

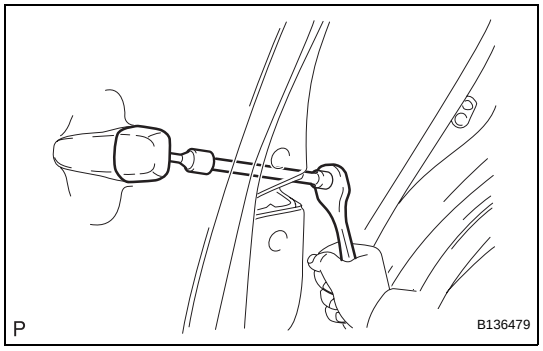

23. REMOVE REAR DOOR OUTSIDE HANDLE COVER

(a) Using a "torx" socket wrench (T30), loosen the screw.
HINT:
The screw cannot be removed because it is integrated into the rear door outside handle frame sub-assembly.

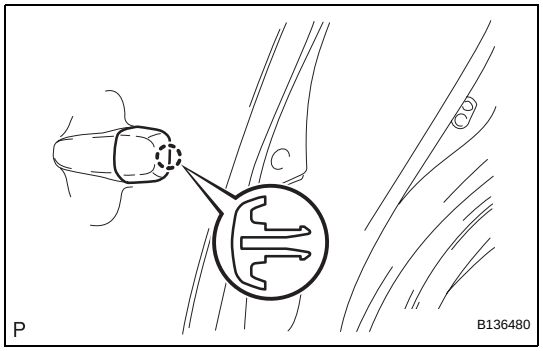

(b) Disengage the 2 claws and remove the rear door outside handle cover.

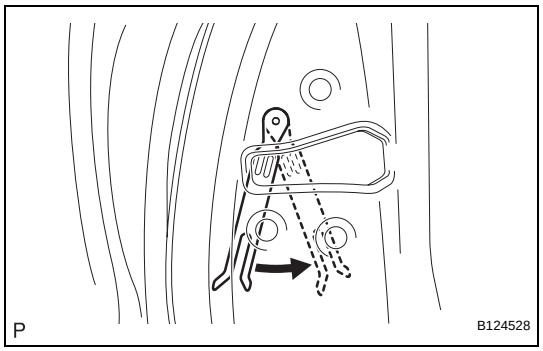

24. REMOVE REAR DOOR OUTSIDE HANDLE ASSEMBLY

(a) Pull and hold the release plate of the outside handle frame as shown in the illustration.
NOTICE:
The release plate may interfere with the outside handle and may be damaged when removing the handle, unless the release plate of the outside handle frame is pulled and held.

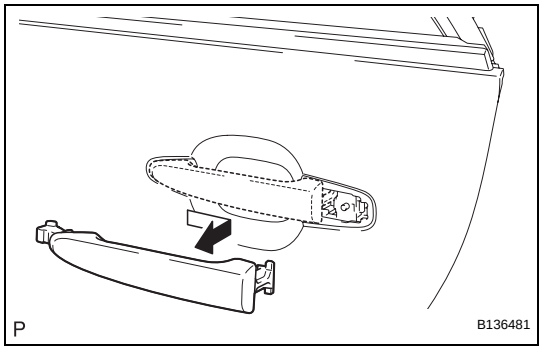

(b) Remove the rear door outside handle assembly as shown in the illustration.

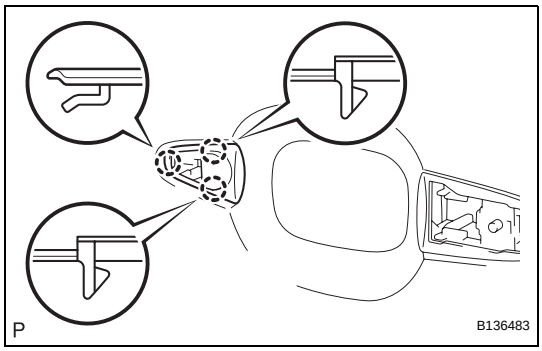

25. REMOVE REAR DOOR FRONT OUTSIDE HANDLE PAD

(a) Disengage the 3 claws and remove the rear door front outside handle pad.

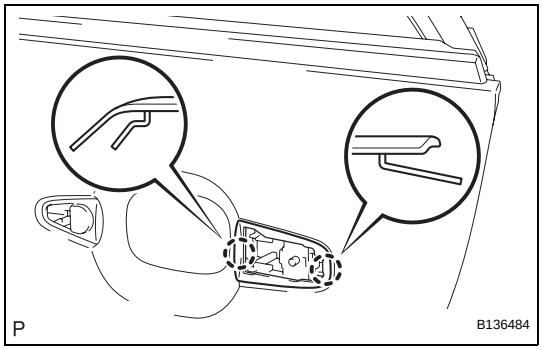

26. REMOVE REAR DOOR REAR OUTSIDE HANDLE PAD

(a) Disengage the 2 claws and remove the rear door rear outside handle pad.

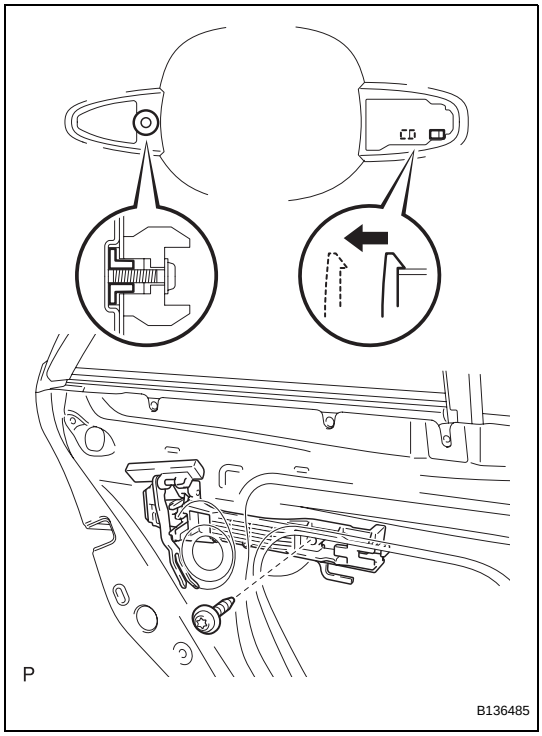

27. REMOVE REAR DOOR OUTSIDE HANDLE FRAME SUB-ASSEMBLY

(a) Using a "torx" socket wrench (T30), remove the screw.

(b) Disengage the claws and remove the rear door outside handle frame sub-assembly.

28. REMOVE REAR DOOR BELT MOULDING ASSEMBLY (See page ET-37)

29. REMOVE REAR DOOR FRONT WINDOW FRAME MOULDING (See page ET-55)

30. REMOVE REAR DOOR UPPER WINDOW FRAME MOULDING (See page ET-56)

31. REMOVE REAR DOOR OUTSIDE STRIPE (See page ET-76)

32. REMOVE REAR DOOR LOWER OUTSIDE STRIPE (See page ET-76)

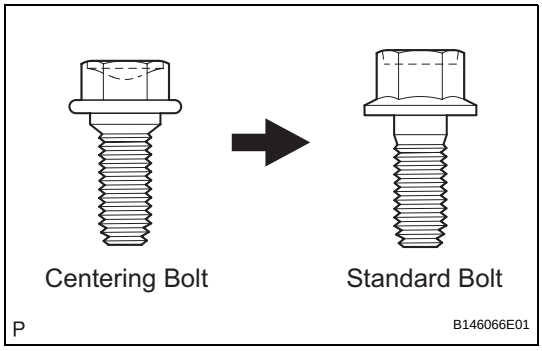

ADJUSTMENT

HINT:

- Before adjusting the door position for vehicles equipped with side airbags and curtain shield airbags, be sure to disconnect the battery. After adjustment, inspect the SRS warning light, the side airbag system, and the curtain shield airbag system for normal operation. Then initialize both airbag systems.
- Use the same procedures for the RH side and LH side.
- The procedures listed below are for the LH side.

- Centering bolts are used to mount the door hinge to the vehicle body and door. The door cannot be adjusted with the centering bolts on. Substitute the centering bolts with standard bolts (with washers) when making adjustments.
- A bolt without a torque specification is shown in the standard bolt chart (See page SS-2).

1. DISCONNECT CABLE FROM NEGATIVE BATTERY TERMINAL

CAUTION:
Wait for 90 seconds after disconnecting the cable to prevent airbag deployment (See page RS-363).

2. ADJUST REAR DOOR

(a) Loosen the body's hinge bolts and adjust the door position.
SST 09812-00010

(b) Tighten the body's hinge bolts after the adjustment.
Torque: 26 N*m (265 kgf*cm, 19 ft.*lbf)

(c) Loosen the door's hinge bolts and adjust the door position.

(d) Tighten the door's hinge bolts after the adjustment.
Torque: 26 N*m (265 kgf*cm, 19 ft.*lbf)

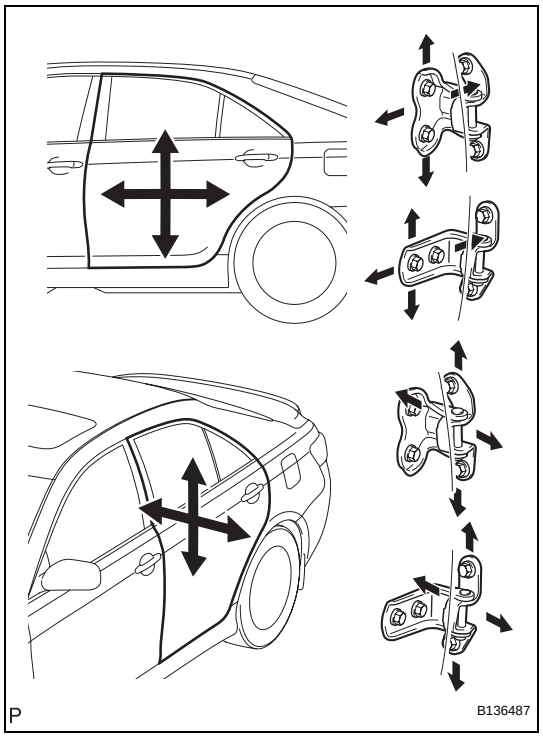

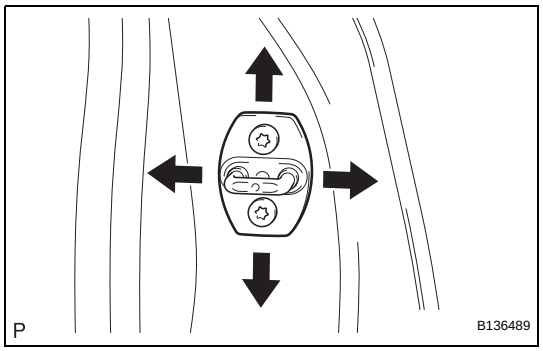

(e) Using a "torx" socket wrench (T40), adjust the striker position by slightly loosening the striker mounting screws and hitting the striker with a plastic hammer.

(f) Using a "torx" socket wrench (T40), tighten the striker mounting screws after the adjustment.
Torque: 23 N*m (235 kgf*cm, 17 ft.*lbf)

3. CONNECT CABLE TO NEGATIVE BATTERY TERMINAL

4. INSPECT SRS WARNING LIGHT
(See page ED-25)

ED

ED

REASSEMBLY

1. **REPAIR INSTRUCTION (See page ET-77)**
2. **INSTALL REAR DOOR LOWER OUTSIDE STRIPE (See page ET-80)**
3. **INSTALL REAR DOOR OUTSIDE STRIPE (See page ET-80)**
4. **INSTALL REAR DOOR UPPER WINDOW FRAME MOULDING (See page ET-56)**
5. **INSTALL REAR DOOR FRONT WINDOW FRAME MOULDING (See page ET-57)**
6. **INSTALL REAR DOOR BELT MOULDING ASSEMBLY (See page ET-37)**
7. **INSTALL REAR DOOR OUTSIDE HANDLE FRAME SUB-ASSEMBLY**
   (a) Apply MP grease to the sliding parts on the rear door outside handle frame sub-assembly.
   (b) Using a "torx" socket wrench (T30), install the rear door outside handle frame sub-assembly with the screw.

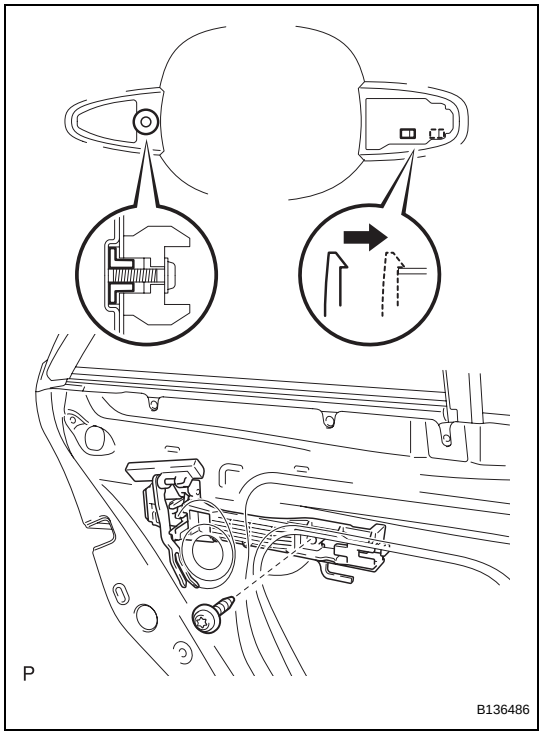

8. **INSTALL REAR DOOR REAR OUTSIDE HANDLE PAD**
   (a) Attach the 2 claws to install the rear door rear outside handle pad.

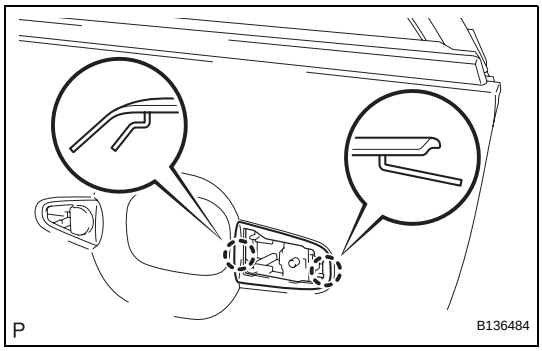

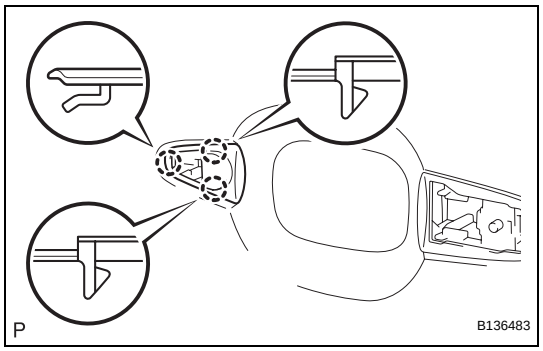

9. INSTALL REAR DOOR FRONT OUTSIDE HANDLE PAD

(a) Attach the 3 claws to install the rear door front outside handle pad.

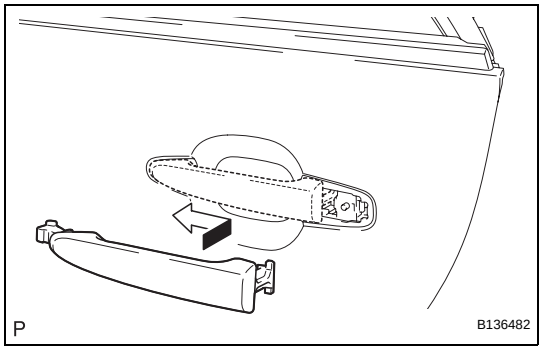

10. INSTALL REAR DOOR OUTSIDE HANDLE ASSEMBLY

(a) Insert the front end of the rear door outside handle assembly into the rear door outside handle frame.
NOTICE:
If the bellcrank lever is not pulled and held when installing the outside handle, the bellcrank lever will interfere with the outside handle and it will damage the release plate.

(b) Insert the rear end of the rear door outside handle assembly into the rear door outside handle frame. Next slide the rear door outside handle assembly to the front of the vehicle to install it.

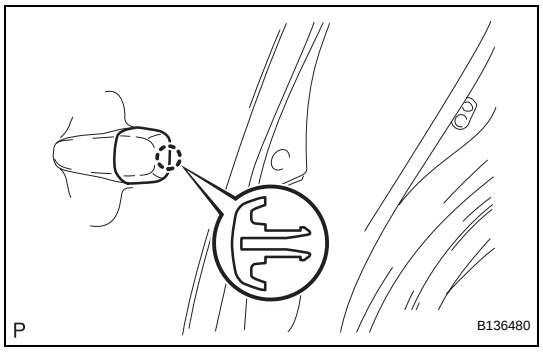

11. INSTALL REAR DOOR OUTSIDE HANDLE COVER

(a) Install the rear door outside handle cover with the claw.

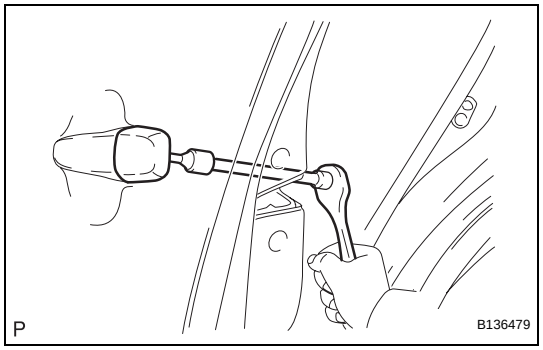

(b) Using a "torx" socket wrench (T30), install the rear door outside handle cover with the screw.

ED

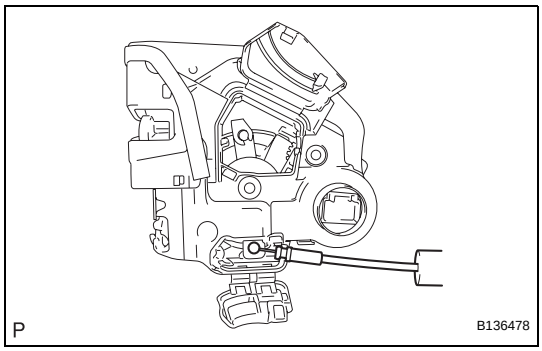

12. INSTALL REAR DOOR INSIDE LOCKING CABLE ASSEMBLY

(a) Install the rear door inside locking cable assembly.

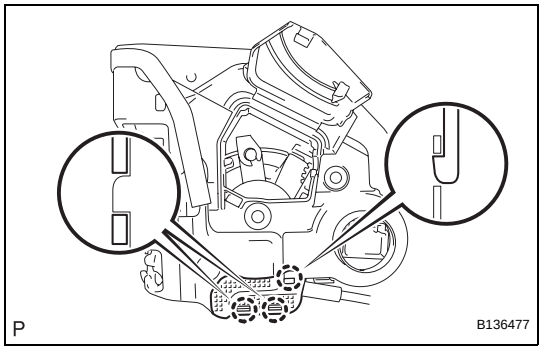

(b) Engage the 3 claws.

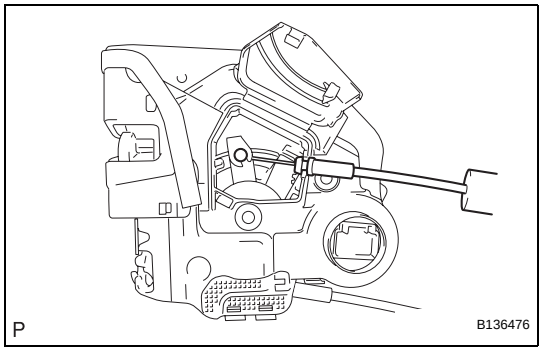

13. INSTALL REAR DOOR LOCK REMOTE CONTROL CABLE ASSEMBLY

(a) Install the rear door lock remote control cable assembly.

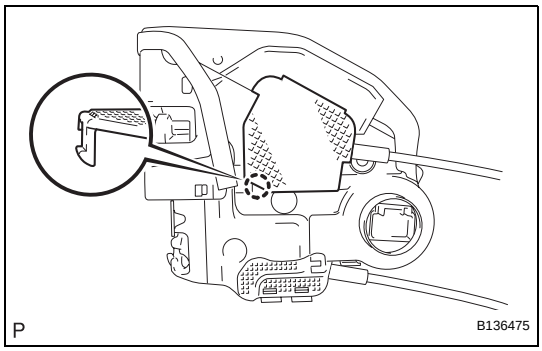

(b) Engage the claw.

14. INSTALL REAR DOOR LOCK ASSEMBLY

NOTICE:

- **When reusing the removed rear door lock assembly, replace the door lock wire harness sealing on the connector with a new one.**
- **Do not allow grease or dust to adhere on the door lock wiring harness sealing surface of the connector.**
- **Reusing the door lock wiring harness sealing and/or using damaged door lock wiring harness sealing may cause water intrusion to the connection. This may result in a malfunction in the rear door lock assembly.**

(a) Apply MP grease to the sliding parts on the rear door lock assembly.

(b) Install a new door lock wiring harness sealing to the rear door lock assembly.

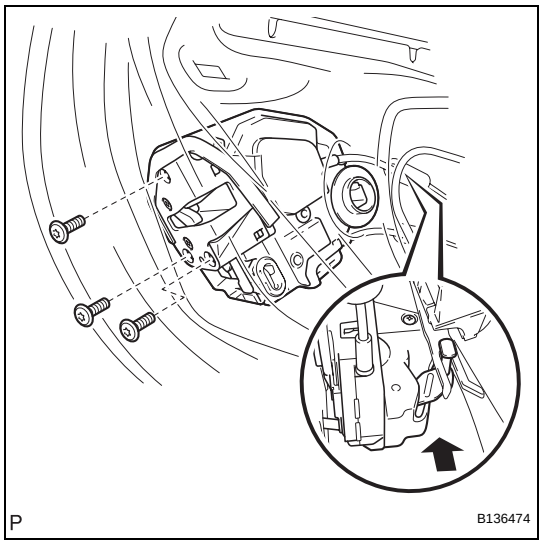

(c) Insert the rear door lock assembly to the rear door outside handle release plate, and set it to the rear door panel.
(d) Make sure that the rear door outside handle frame release plate is securely connected to the rear door lock assembly.
(e) Using a "torx" socket wrench (T30), install the rear door lock assembly with the 3 screws.
Torque: 5.0 N*m (51 kgf*cm, 44 in.*lbf)
(f) Connect the connector.

15. INSTALL REAR POWER WINDOW REGULATOR MOTOR ASSEMBLY
NOTICE:
The regulator arm must be below the intermediate position when installing the power window regulator motor.

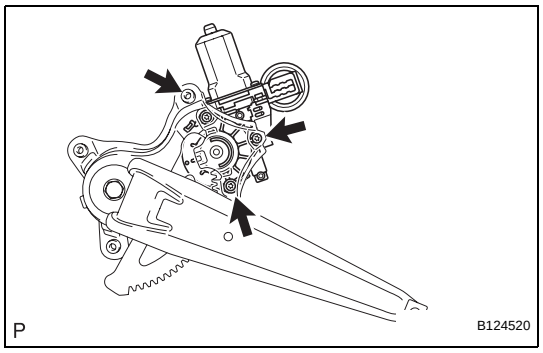

(a) Using a "torx" driver (T25), install the power window regulator motor assembly with the 3 screws.
Torque: 5.4 N*m (55 kgf*cm, 48 in.*lbf)
HINT:
The new rear window regulator adopts a self-tapping method. The installation position of the regulator will be threaded when the self-tapping screw is inserted.

16. INSTALL REAR DOOR WINDOW REGULATOR SUB-ASSEMBLY
(a) Apply MP grease to the sliding parts on the rear door window regulator sub-assembly.

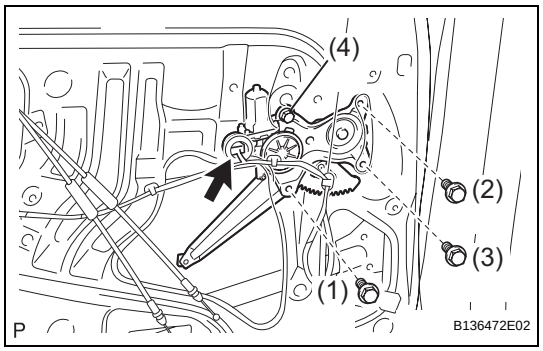

(b) Install the temporary bolt to the rear door window regulator sub-assembly.
(c) Temporarily install the window regulator.
(d) Tighten the 4 bolts in the order shown in the illustration to install the rear door window regulator.
Torque: 8.0 N*m (82 kgf*cm, 71 in.*lbf)
(e) Connect the connector.

17. INSTALL REAR DOOR FRAME GARNISH
(a) Engage the clip and install a new rear door frame garnish.

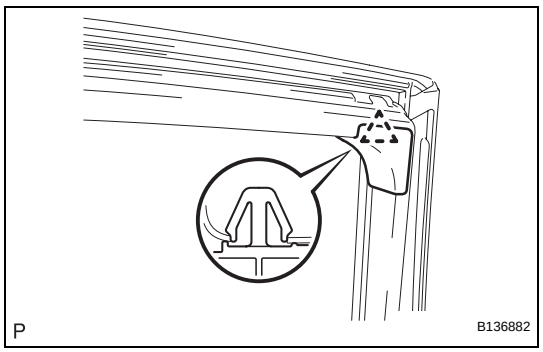

ED

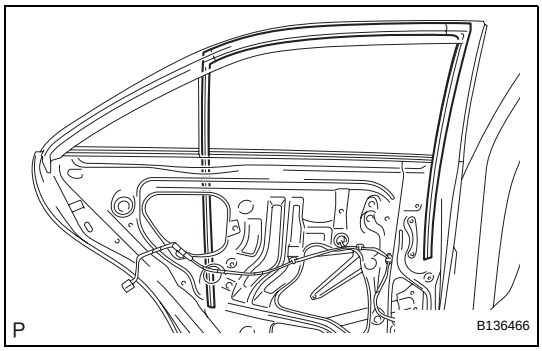

18. INSTALL REAR DOOR GLASS RUN

(a) Install the rear door glass run.

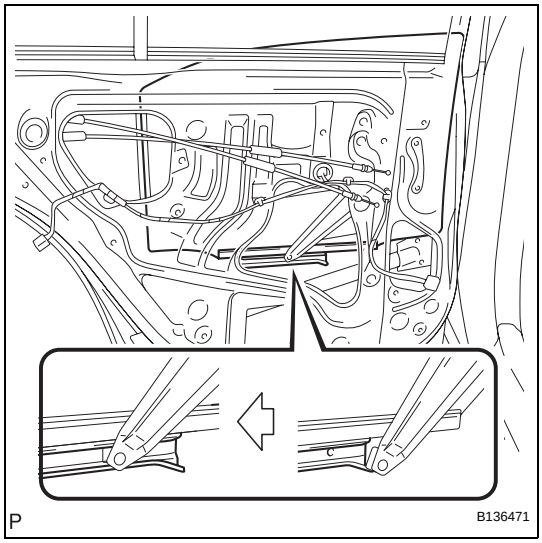

19. INSTALL REAR DOOR GLASS SUB-ASSEMBLY

(a) Slide the rear door glass sub-assembly to install it as shown in the illustration.

20. INSTALL REAR DOOR QUARTER WINDOW GLASS

(a) Install the rear door quarter window glass to the rear door quarter weatherstrip.

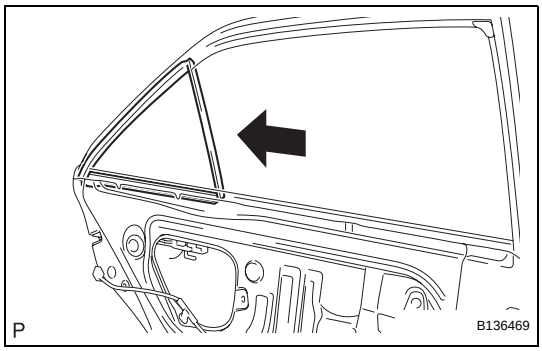

(b) Install the rear door quarter window glass together with the rear door quarter window glass weatherstrip in the direction indicated by the arrow in the illustration.

21. INSTALL REAR DOOR LOWER WINDOW FRAME SUB-ASSEMBLY

(a) Insert the rear door lower window frame sub-assembly from up above.

(b) Install the rear door glass run to the rear door lower window frame sub-assembly.

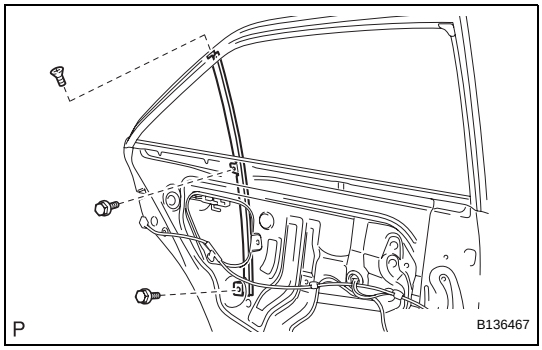

(c) Install the rear door lower window frame sub-assembly with the 2 bolts and screw.

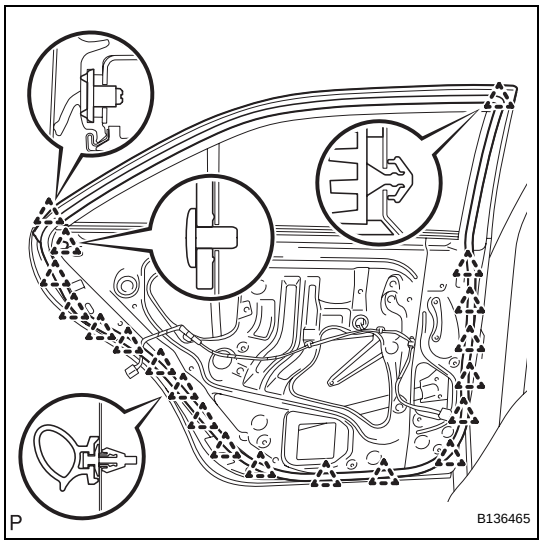

22. INSTALL REAR DOOR WEATHERSTRIP

(a) Engage the 20 clips and install the rear door weatherstrip.

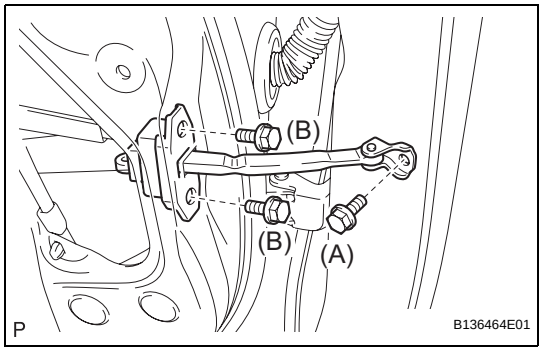

23. INSTALL REAR DOOR CHECK ASSEMBLY (for TMC Made)

(a) Install the rear door check assembly with the 3 bolts.
Torque: Bolt (A)
26 N*m (265 kgf*cm, 19 ft.*lbf)
Torque: Bolt (B)
8.0 N*m (82 kgf*cm, 71 in.*lbf)

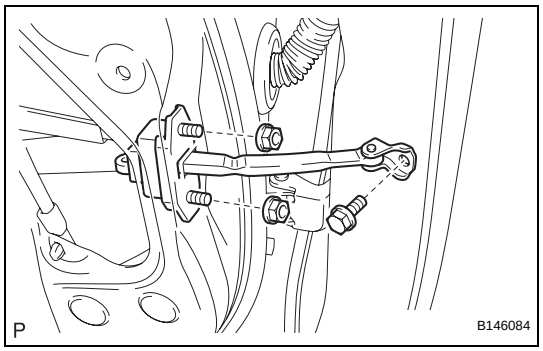

24. INSTALL REAR DOOR CHECK ASSEMBLY (for TMMK Made)

(a) Install the rear door check assembly with the bolt and 2 nuts.
Torque: Bolt
26 N*m (265 kgf*cm, 19 ft.*lbf)
Torque: Nut
8.0 N*m (82 kgf*cm, 71 in.*lbf)

25. INSTALL REAR DOOR SERVICE HOLE COVER

(a) Apply butyl tape to the rear door panel.

(b) Pass the rear door lock remote control cable, rear door inside locking cable and each connector through a new rear door service hole cover.

(c) Install a new rear door service hole cover.
NOTICE:
Securely install the rear door service hole cover avoiding wrinkles and air bubbles.

(d) Connect the connector and clamp.

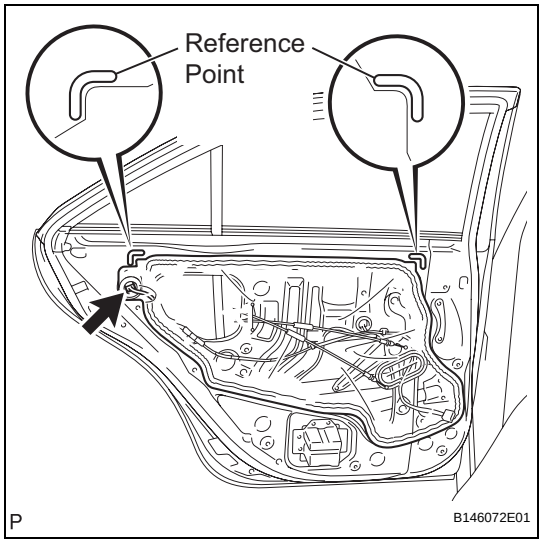

26. INSTALL REAR DOOR INSIDE PANEL REINFORCE

(a) Install 4 new grommets.

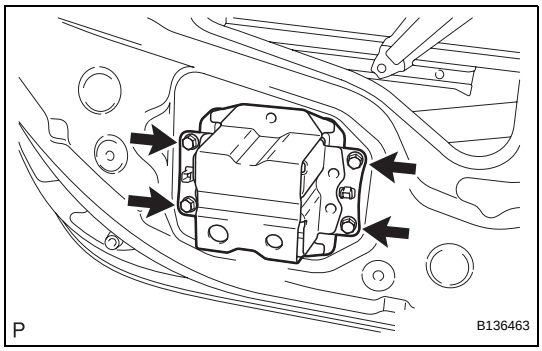

(b) Install a new rear door inside panel reinforce with the 4 screws.

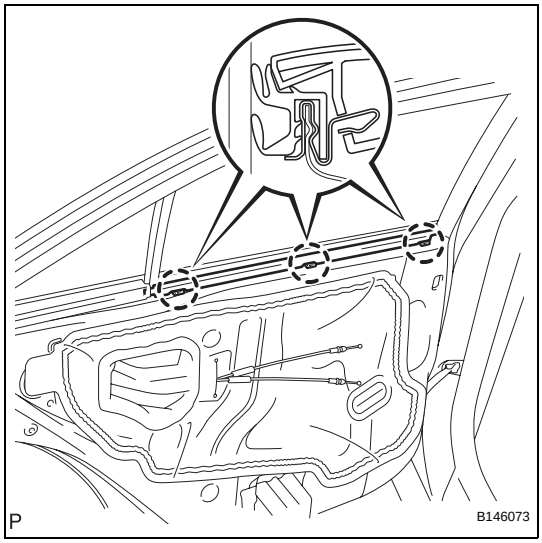

27. INSTALL REAR DOOR INNER GLASS WEATHERSTRIP

(a) Engage the 3 claws to install the rear door inner glass weatherstrip.

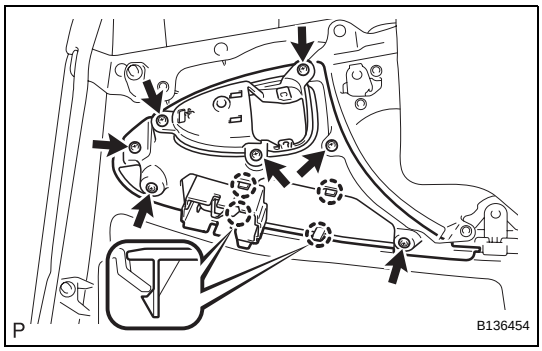

28. INSTALL REAR DOOR ARMREST BASE PANEL UPPER

(a) Engage the 4 claws.

(b) Install the rear door armrest base panel upper with the 7 screws.

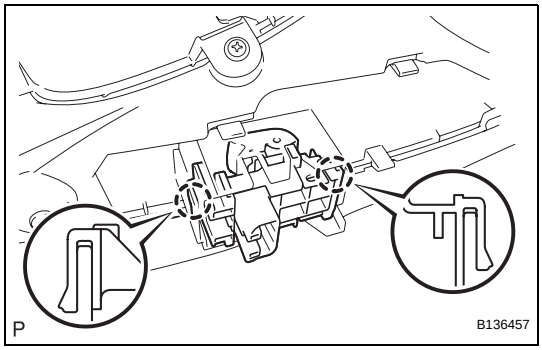

29. INSTALL REAR POWER WINDOW REGULATOR SWITCH ASSEMBLY

(a) Engage the 2 claws and install the rear power window regulator switch assembly.

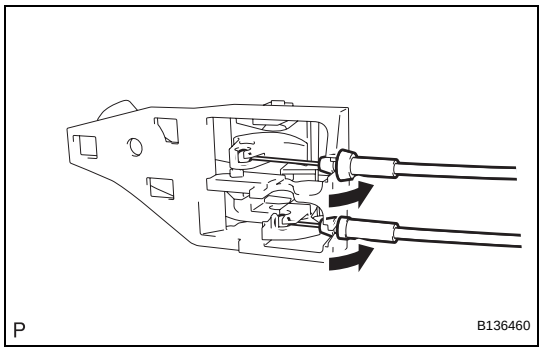

30. INSTALL REAR DOOR INSIDE HANDLE SUB-ASSEMBLY

(a) Connect the rear door lock remote control cable and rear door inside locking cable to the rear inside handle.

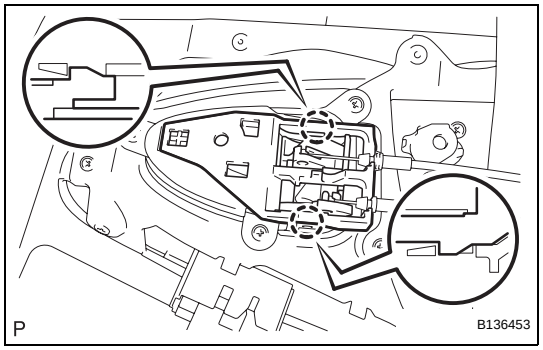

(b) Engage the 2 claws and install the rear door inside handle sub-assembly.

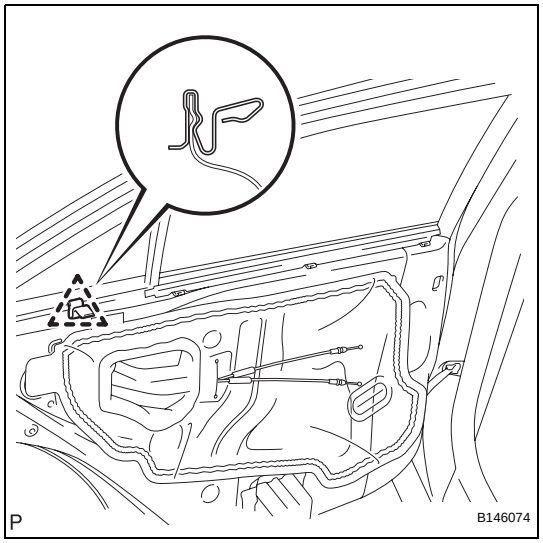

31. INSTALL REAR DOOR TRIM BOARD SUB-ASSEMBLY

(a) Engage the claw to install the No. 1 door scuff plate clamp.

(b) Connect each connector.

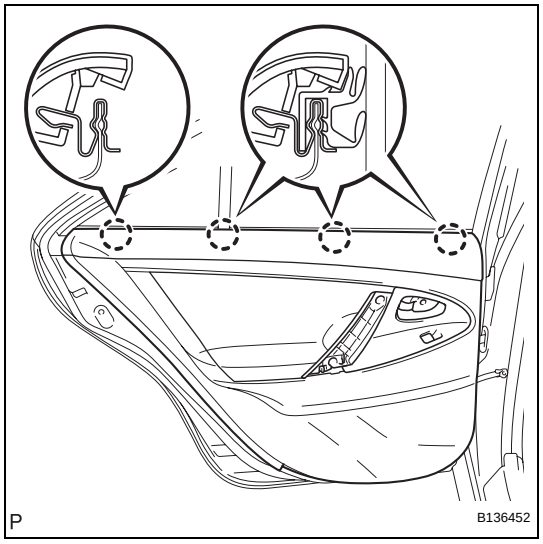

(c) Engage the rear door trim board with the 4 clips of the rear door inner glass weatherstrip.

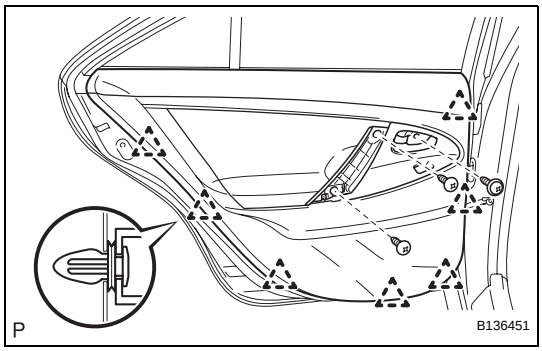

(d) Engage the 7 clips to install the rear door trim board to the rear door panel.
(e) Install the 3 screws.

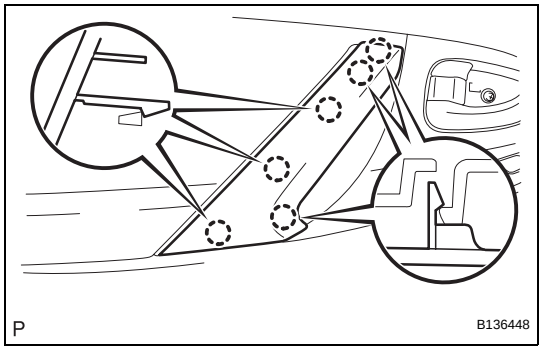

32. INSTALL DOOR ASSIST GRIP COVER
(a) Engage the 6 claws and install the door assist grip cover.

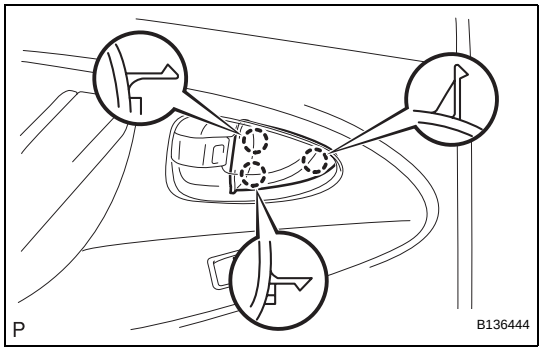

33. INSTALL REAR DOOR INSIDE HANDLE BEZEL PLUG
(a) Engage the 3 claws to install the rear door inside handle bezel plug.

34. INITIALIZATION POWER WINDOW CONTROL SYSTEM
(See page WS-8)

LUGGAGE COMPARTMENT DOOR

COMPONENTS

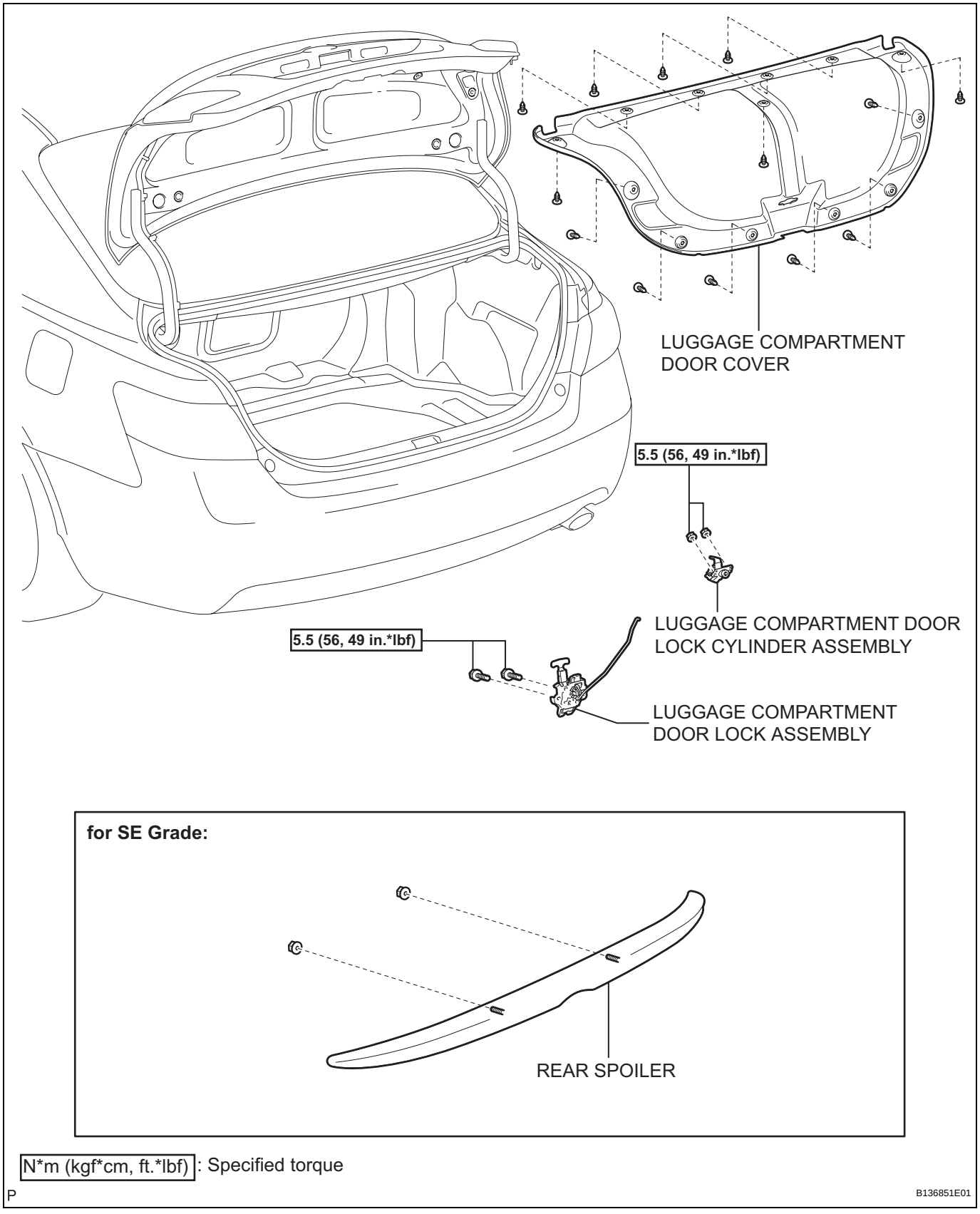

ED

ED

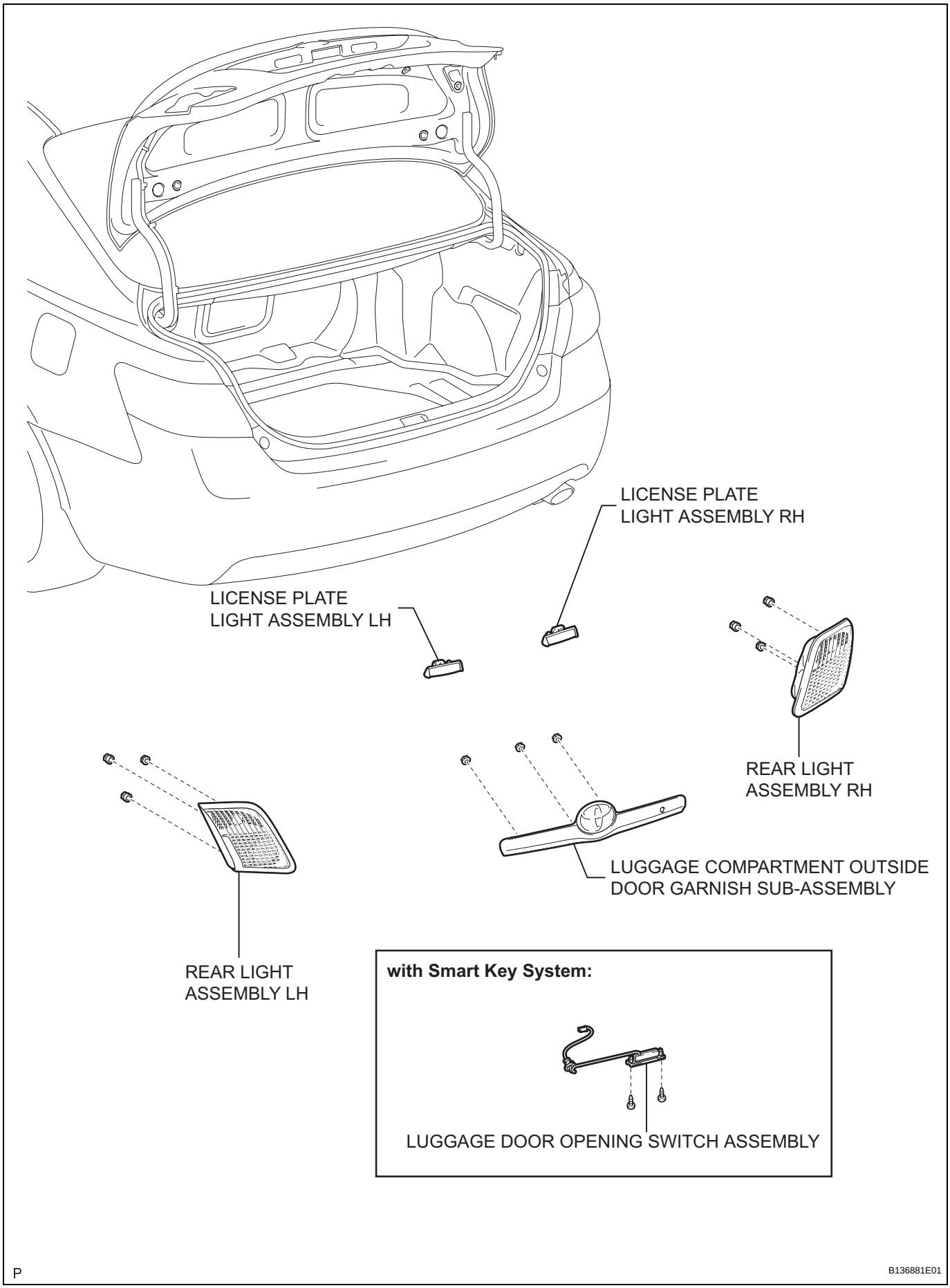
LICENSE PLATE
LIGHT ASSEMBLY RH
LICENSE PLATE
LIGHT ASSEMBLY LH
REAR LIGHT
ASSEMBLY RH
LUGGAGE COMPARTMENT OUTSIDE
DOOR GARNISH SUB-ASSEMBLY
REAR LIGHT
ASSEMBLY LH
with Smart Key System:
LUGGAGE DOOR OPENING SWITCH ASSEMBLY
P
B136881E01

ON-VEHICLE INSPECTION

1. INSPECT LUGGAGE COMPARTMENT DOOR PANEL SUB-ASSEMBLY

(a) Check that the clearance measurements of areas A to F are within each standard range.

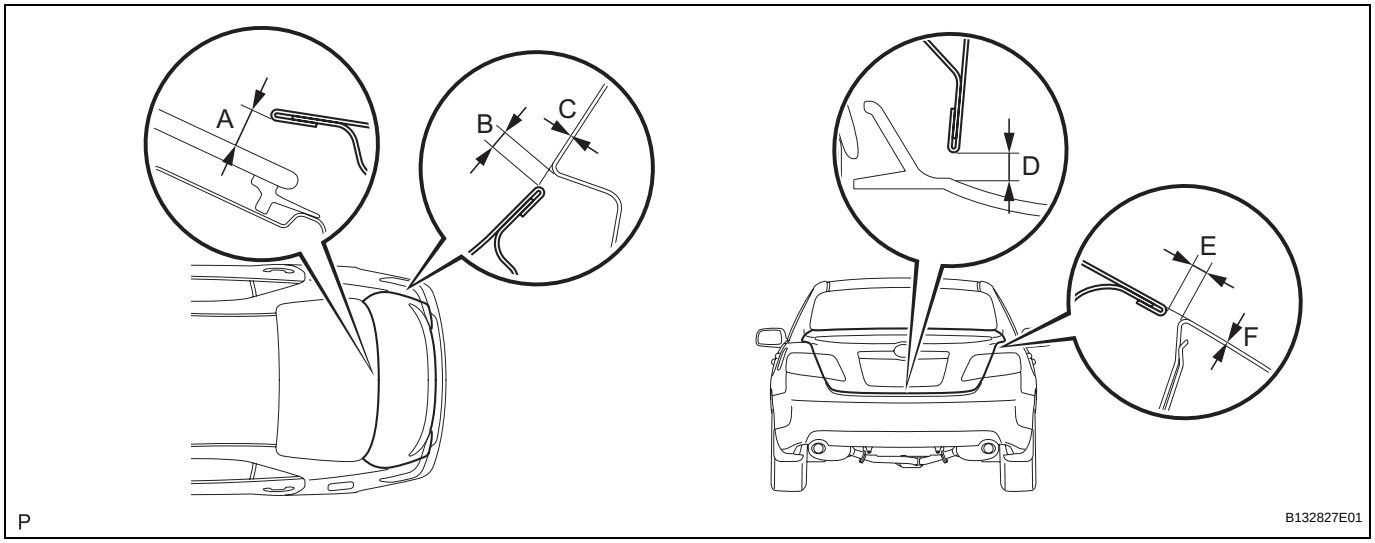

Standard clearance

Area	Measurement	Area	Measurement
A	7.6 mm (0.299 in.)	D	3.8 to 7.8 mm (0.146 to 0.307 in.)
B	2.0 to 5.0 mm (0.079 to 0.197 in.)	E	2.0 to 5.0 mm (0.079 to 0.197 in.)
C	-1.5 to 1.5 mm (-0.059 to 0.059 in.)	F	-1.5 to 1.5 mm (-0.059 to 0.059 in.)

ED

DISASSEMBLY

1. **REMOVE LUGGAGE COMPARTMENT DOOR COVER (See page ET-61)**
2. **REMOVE LUGGAGE COMPARTMENT DOOR LOCK ASSEMBLY (See page ED-63)**
3. **REMOVE LUGGAGE COMPARTMENT DOOR LOCK CYLINDER ASSEMBLY**
   (a) Disconnect the cable and connector.

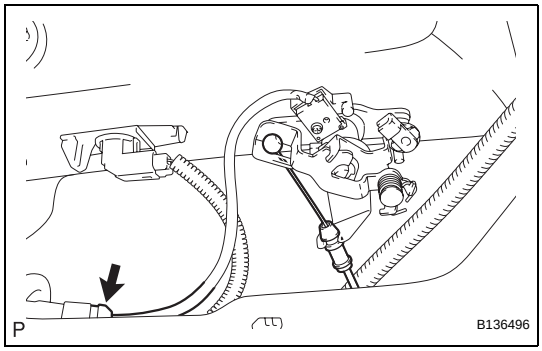

   (b) Remove the 2 nuts and the luggage compartment door lock cylinder assembly.

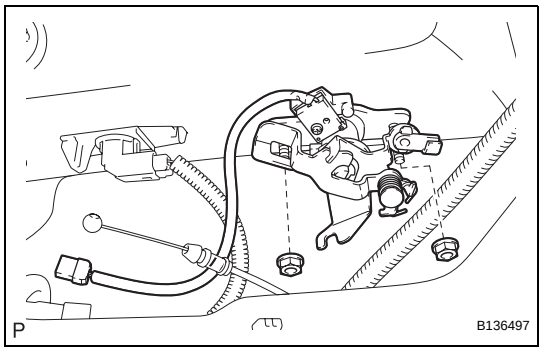

4. **REMOVE REAR SPOILER (for SE Grade) (See page ET-30)**
5. **REMOVE LUGGAGE DOOR OPENING SWITCH ASSEMBLY (w/ Smart Key System) (See page DL-246)**
6. **REMOVE LUGGAGE COMPARTMENT OUTSIDE DOOR GARNISH SUB-ASSEMBLY (See page ET-61)**
7. **REMOVE REAR LIGHT ASSEMBLY LH (See page LI-87)**
8. **REMOVE REAR LIGHT ASSEMBLY RH**
9. **REMOVE LICENSE PLATE LIGHT ASSEMBLY LH (See page LI-94)**
10. **REMOVE LICENSE PLATE LIGHT ASSEMBLY RH**

ADJUSTMENT

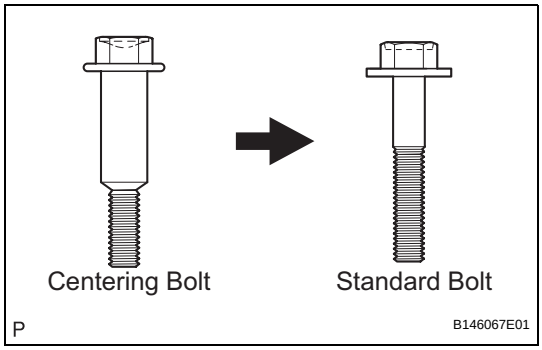

HINT:
- Centering bolts are used to mount the door hinge to the door. The door cannot be adjusted with the centering bolts on. Substitute the centering bolts with standard bolts (with washers) when making adjustments.
- A bolt without a torque specification is shown in the standard bolt chart (See page SS-2).

1. **REMOVE LUGGAGE COMPARTMENT DOOR COVER (See page ET-61)**
2. **REMOVE LUGGAGE COMPARTMENT FLOOR MAT**
3. **REMOVE SPARE WHEEL COVER CLAMP**
4. **REMOVE SPARE WHEEL COVER ASSEMBLY**
5. **REMOVE LUGGAGE COMPARTMENT SIDE TRAY ASSEMBLY (See page ED-66)**

6. **REMOVE NO. 1 LUGGAGE COMPARTMENT TRIM HOOK (See page ED-66)**

7. **REMOVE REAR FLOOR FINISH PLATE (See page ED-66)**

8. **ADJUST LUGGAGE COMPARTMENT DOOR**
   (a) Horizontally and vertically adjust the door by loosening the door side hinge bolts.
   Torque: 7.5 N*m (77 kgf*cm, 66 in.*lbf)

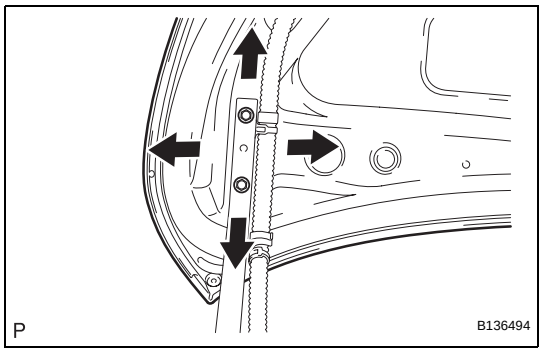

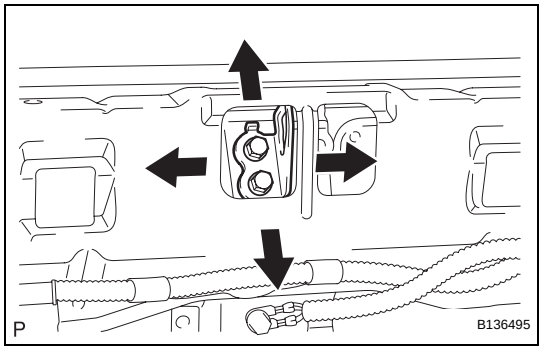

   (b) Adjust the striker position by slightly loosening the striker mounting screws and hitting the striker with a plastic hammer.
   (c) Tighten the striker mounting screws after the adjustment.
   Torque: 5.5 N*m (56 kgf*cm, 49 in.*lbf)

9. **INSTALL REAR FLOOR FINISH PLATE (See page ED-72)**

10. **INSTALL NO. 1 LUGGAGE COMPARTMENT TRIM HOOK (See page ED-72)**

11. **INSTALL LUGGAGE COMPARTMENT SIDE TRAY ASSEMBLY (See page ED-72)**

12. **INSTALL SPARE WHEEL COVER ASSEMBLY**

13. **INSTALL SPARE WHEEL COVER CLAMP**

14. **INSTALL LUGGAGE COMPARTMENT FLOOR MAT**

15. **INSTALL LUGGAGE COMPARTMENT DOOR COVER (See page ET-64)**

ED

REASSEMBLY

1. **INSTALL LICENSE PLATE LIGHT ASSEMBLY LH (See page LI-95)**
2. **INSTALL LICENSE PLATE LIGHT ASSEMBLY RH**
3. **INSTALL REAR LIGHT ASSEMBLY LH (See page LI-91)**
4. **INSTALL REAR LIGHT ASSEMBLY RH**
5. **INSTALL LUGGAGE COMPARTMENT OUTSIDE DOOR GARNISH SUB-ASSEMBLY (See page ET-63)**
6. **INSTALL LUGGAGE DOOR OPENING SWITCH ASSEMBLY (w/ Smart Key System) (See page DL-246)**
7. **INSTALL REAR SPOILER (for SE Grade) (See page ET-31)**
8. **INSTALL LUGGAGE COMPARTMENT DOOR LOCK CYLINDER ASSEMBLY**
   (a) Install the luggage compartment door lock cylinder with the 2 nuts.
   Torque: 5.5 N*m (56 kgf*cm, 49 in.*lbf)

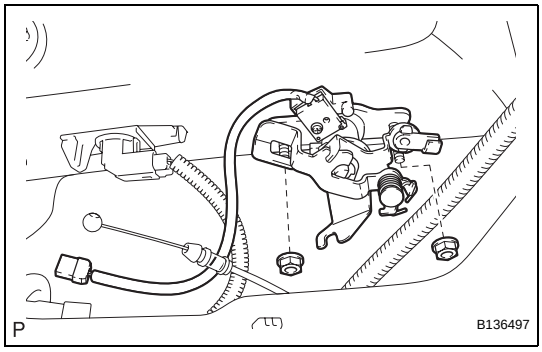

   (b) Connect the cable and connector.

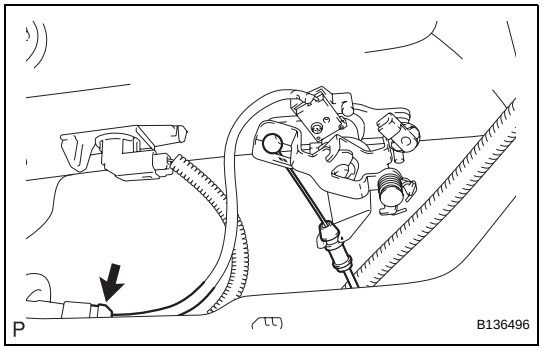

9. **INSTALL LUGGAGE COMPARTMENT DOOR LOCK ASSEMBLY (See page ED-64)**
10. **INSTALL LUGGAGE COMPARTMENT DOOR COVER (See page ET-64)**

LUGGAGE COMPARTMENT DOOR LOCK

COMPONENTS

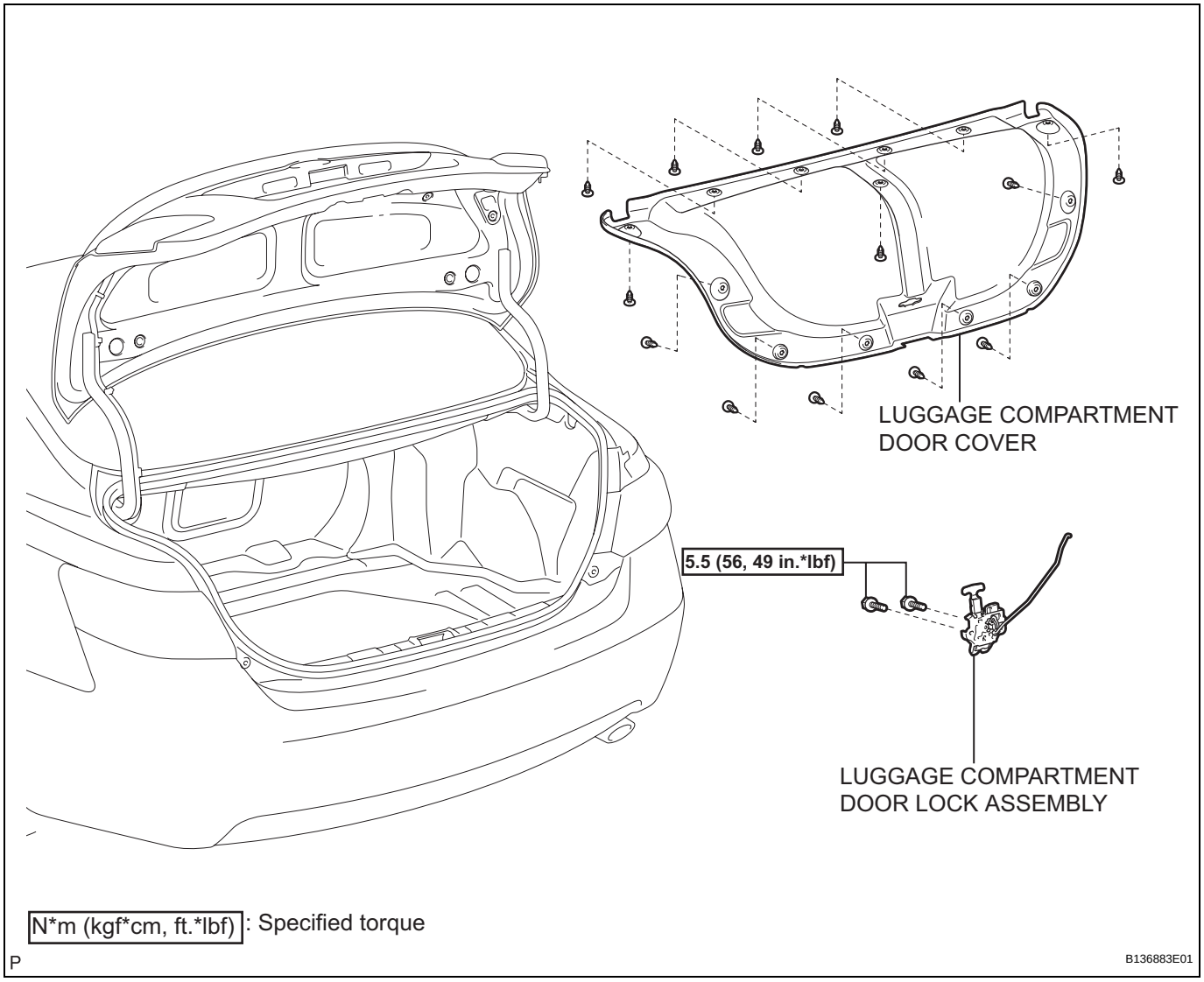

ED

ED

REMOVAL

1. **REMOVE LUGGAGE COMPARTMENT DOOR COVER (See page ET-61)**

2. **REMOVE LUGGAGE COMPARTMENT DOOR LOCK ASSEMBLY**
   (a) Disconnect the rod.

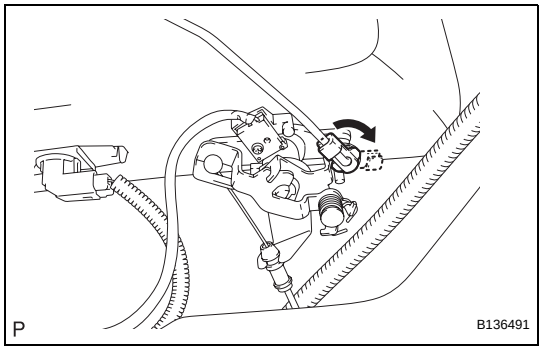

   (b) Disconnect the connector.
   (c) Remove the 2 bolts and luggage compartment door lock assembly.

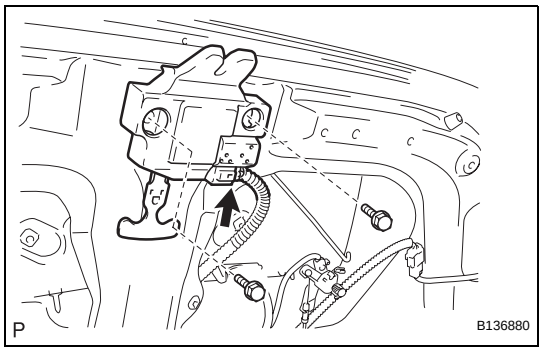

INSTALLATION

1. **INSTALL LUGGAGE COMPARTMENT DOOR LOCK ASSEMBLY**
   (a) Install the luggage compartment door lock assembly with the 2 bolts.
   Torque: 5.5 N*m (56 kgf*cm, 49 in.*lbf)
   (b) Connect the connector.

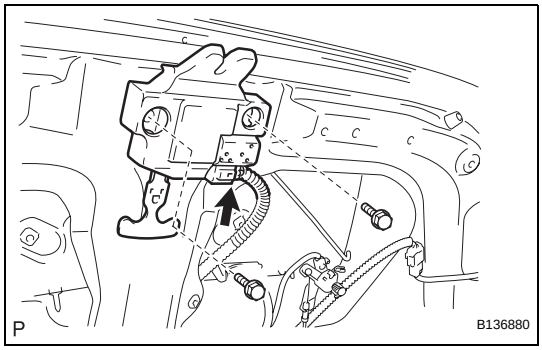

   (c) Connect the rod.

2. **INSTALL LUGGAGE COMPARTMENT DOOR COVER (See page ET-64)**

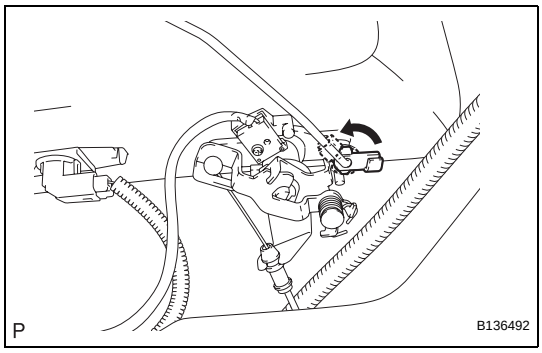

LUGGAGE DOOR HINGE TORSION BAR

COMPONENTS

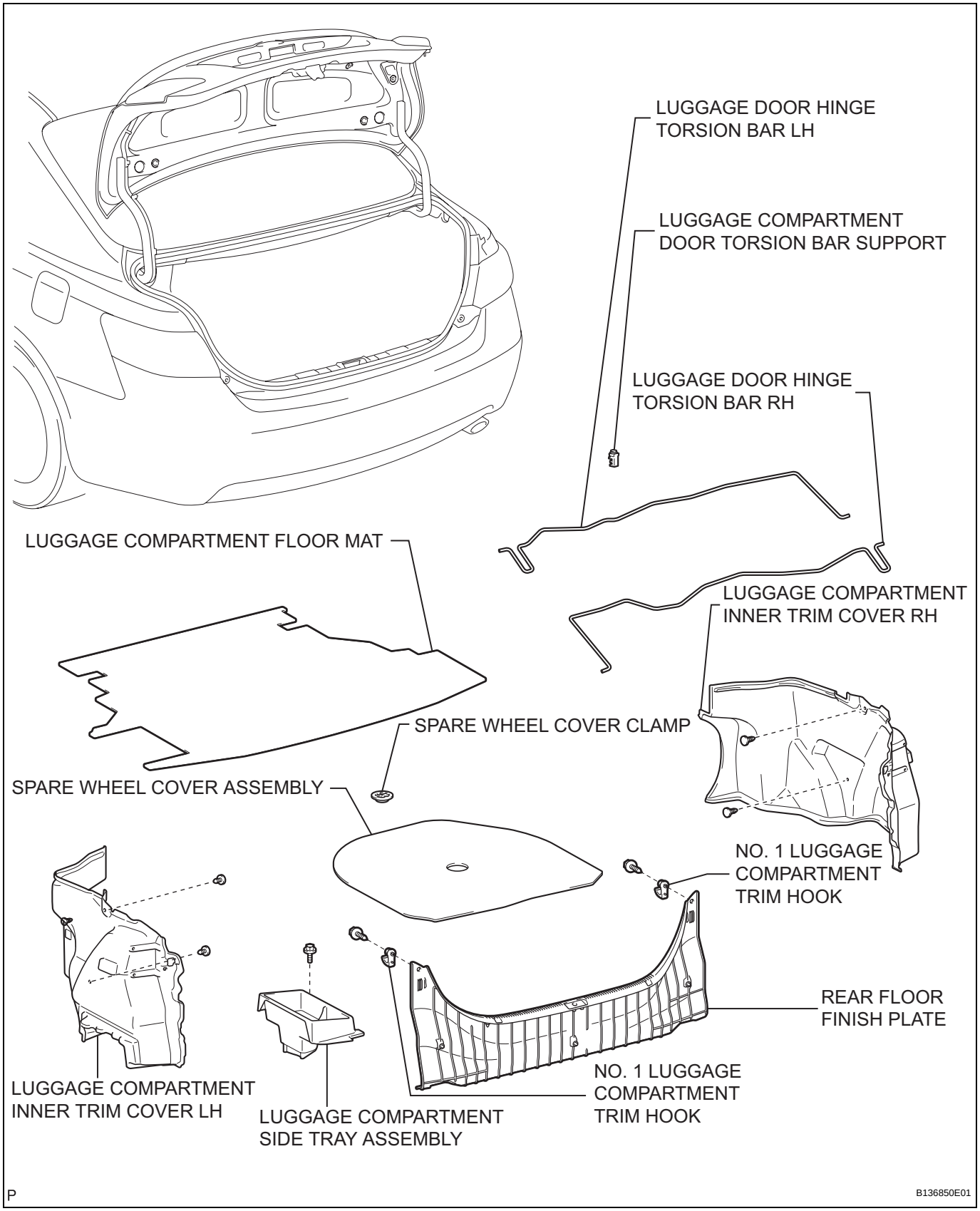

ED

REMOVAL

1. REMOVE LUGGAGE COMPARTMENT FLOOR MAT

2. REMOVE SPARE WHEEL COVER CLAMP

3. REMOVE SPARE WHEEL COVER ASSEMBLY

4. REMOVE LUGGAGE COMPARTMENT SIDE TRAY ASSEMBLY

(a) Remove the bolt.

(b) Disengage the clip and remove the luggage compartment side tray assembly.

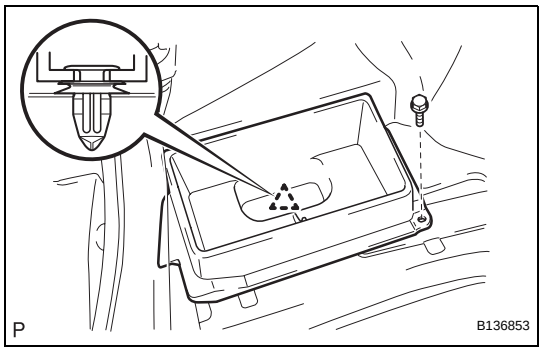

5. REMOVE NO. 1 LUGGAGE COMPARTMENT TRIM HOOK

(a) Remove the 2 screws and the 2 No. 1 luggage compartment trim hooks.

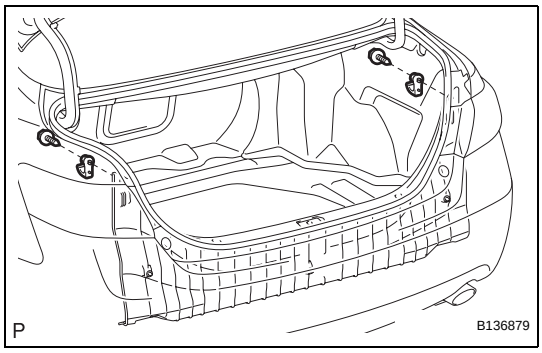

6. REMOVE REAR FLOOR FINISH PLATE

(a) Disengage the 7 clips and remove the rear floor finish plate.

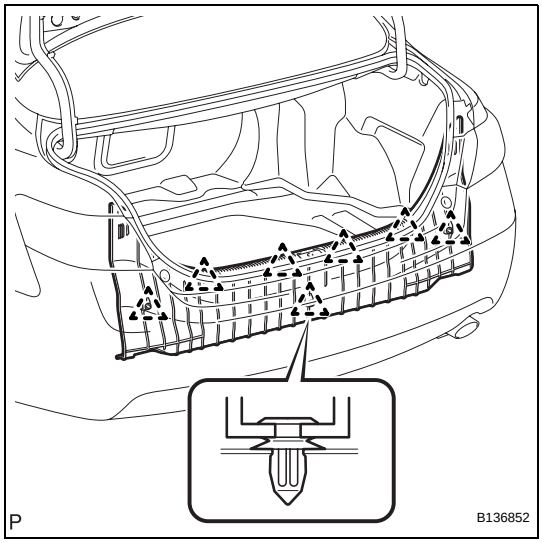

7. REMOVE LUGGAGE COMPARTMENT INNER TRIM COVER LH

(a) Remove the 2 clips and the luggage compartment inner trim cover LH.

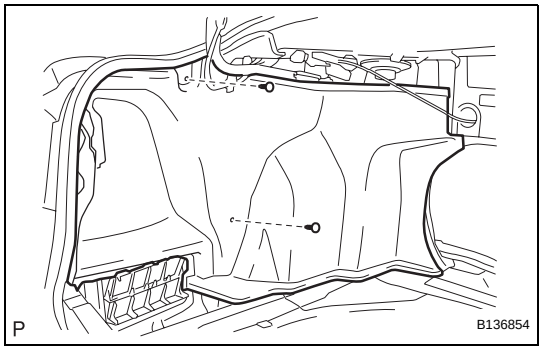

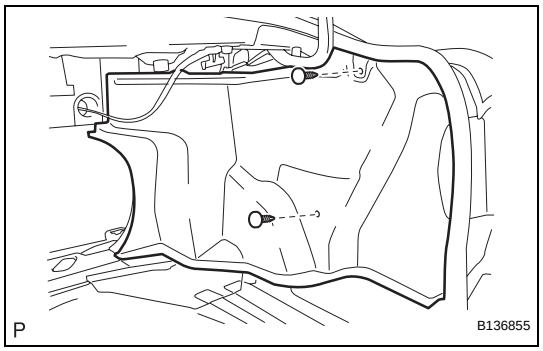

8. REMOVE LUGGAGE COMPARTMENT INNER TRIM COVER RH

(a) Remove the 2 clips and the luggage compartment inner trim cover RH.

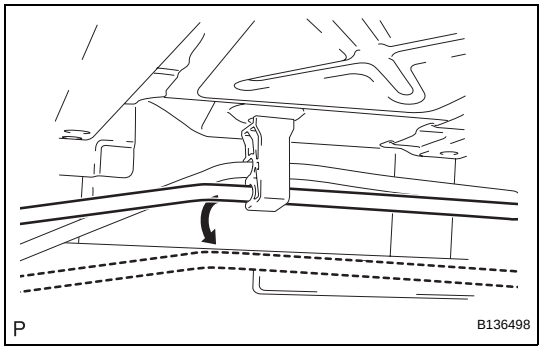

9. REMOVE LUGGAGE DOOR HINGE TORSION BAR RH

(a) Disconnect the luggage door hinge torsion bar RH from the luggage compartment door torsion bar support as shown in the illustration.

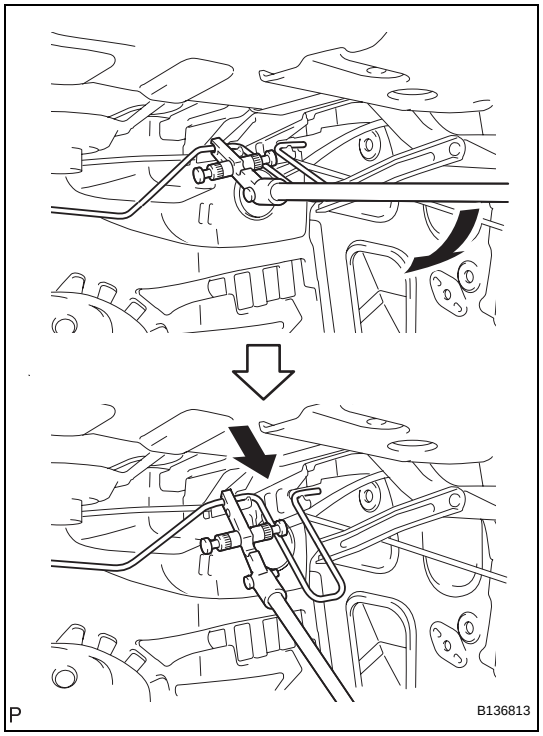

(b) Using SST, disconnect the luggage door hinge torsion bar RH from the luggage door hinge and body RH side as shown in the illustration.
SST 09804-24010

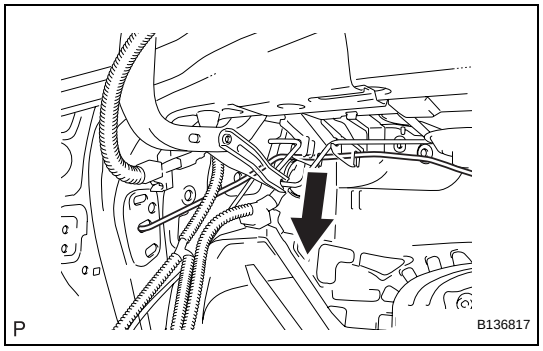

(c) Remove the luggage door hinge torsion bar RH from the body LH side as shown in the illustration.

ED

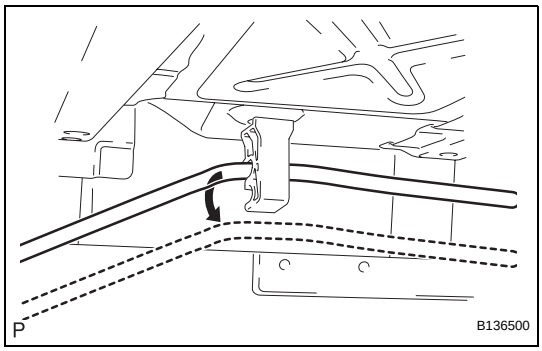

10. REMOVE LUGGAGE DOOR HINGE TORSION BAR LH

(a) Disconnect the luggage door hinge torsion bar LH from the luggage compartment door torsion bar support as shown in the illustration.

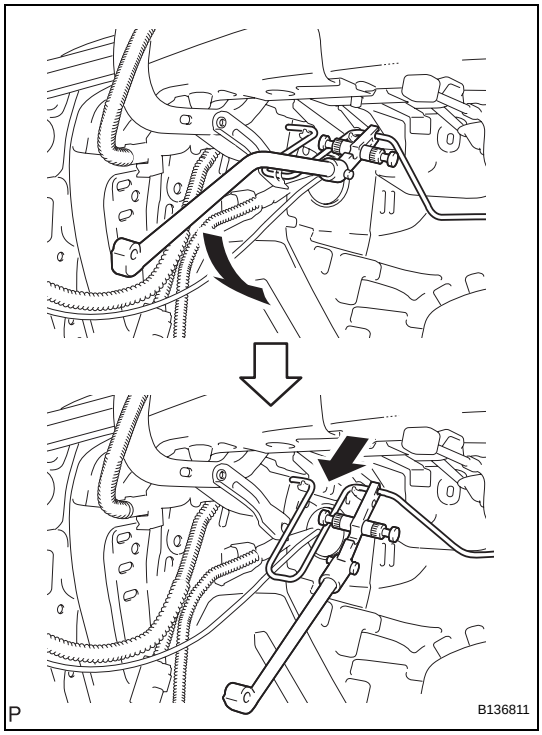

(b) Using SST, disconnect the luggage door hinge torsion bar LH from the luggage door hinge and body LH side as shown in the illustration.
SST 09804-24010

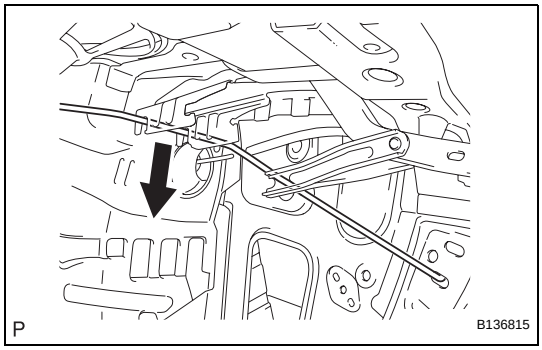

(c) Remove the luggage door hinge torsion bar LH from the body RH side as shown in the illustration.

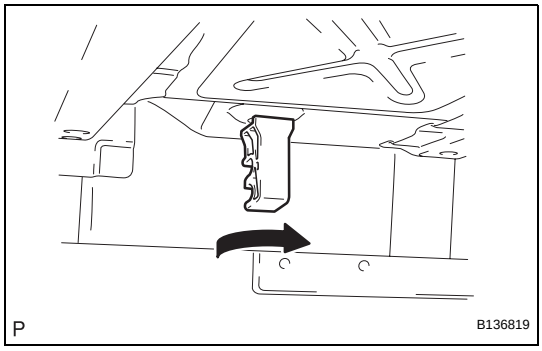

11. REMOVE LUGGAGE COMPARTMENT DOOR TORSION BAR SUPPORT

(a) Remove the luggage compartment door torsion bar support as shown in the illustration.

INSTALLATION

HINT:
- The installation should be performed in the order of LH to RH.
- After installing the torsion bar, use your hand to open and close the luggage door. Make sure the luggage door can open and close smoothly.

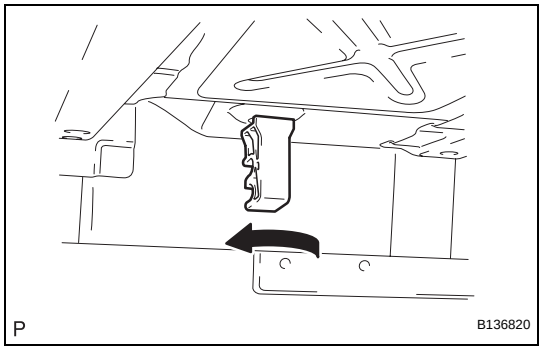

1. INSTALL LUGGAGE COMPARTMENT DOOR TORSION BAR SUPPORT

(a) Install the luggage compartment door torsion bar support as shown in the illustration.

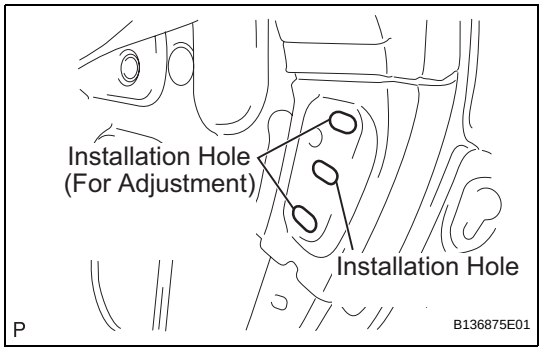

2. INSTALL LUGGAGE DOOR HINGE TORSION BAR LH

(a) Set the tip of the luggage door hinge torsion bar LH in the installation hole placed in the center part. Holes placed in the upper and lower parts are used for adjustment.

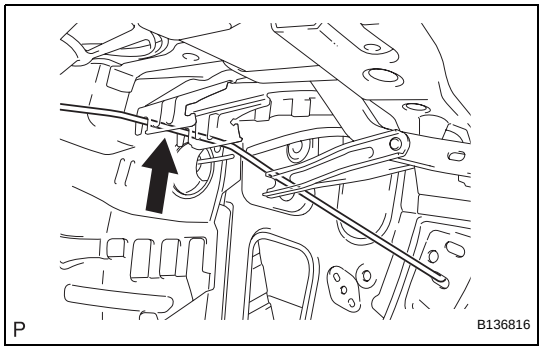

(b) Connect the luggage door hinge torsion bar LH to the body RH side as shown in the illustration.

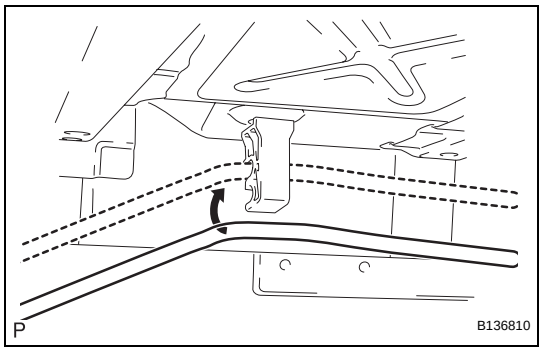

(c) Connect the luggage door hinge torsion bar LH to the luggage compartment door torsion bar support as shown in the illustration.

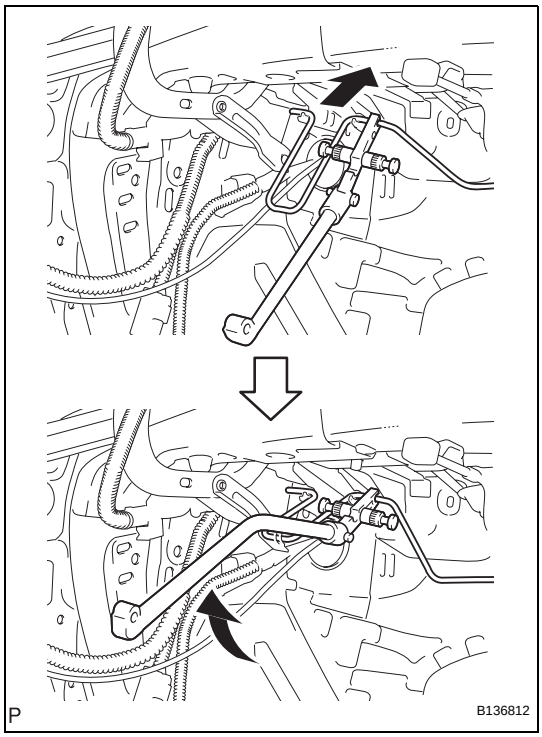

(d) Using SST, install the luggage door hinge torsion bar LH to the luggage door hinge and body LH side as shown in the illustration.
SST 09804-24010

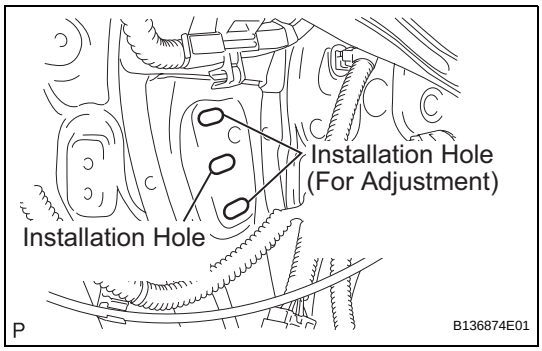

3. INSTALL LUGGAGE DOOR HINGE TORSION BAR RH

(a) Set the tip of the luggage door hinge torsion bar RH in the installation hole placed in the center part. Holes placed in the upper and lower parts are used for adjustment.

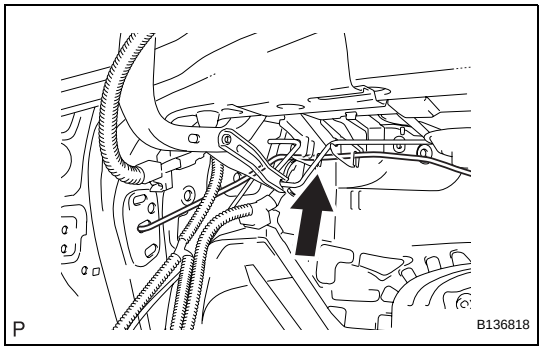

(b) Connect the luggage door hinge torsion bar RH to the body LH side as shown in the illustration.

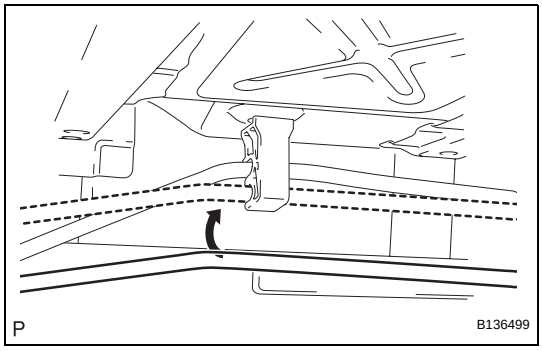

(c) Connect the luggage door hinge torsion bar RH to the luggage compartment door torsion bar support as shown in the illustration.

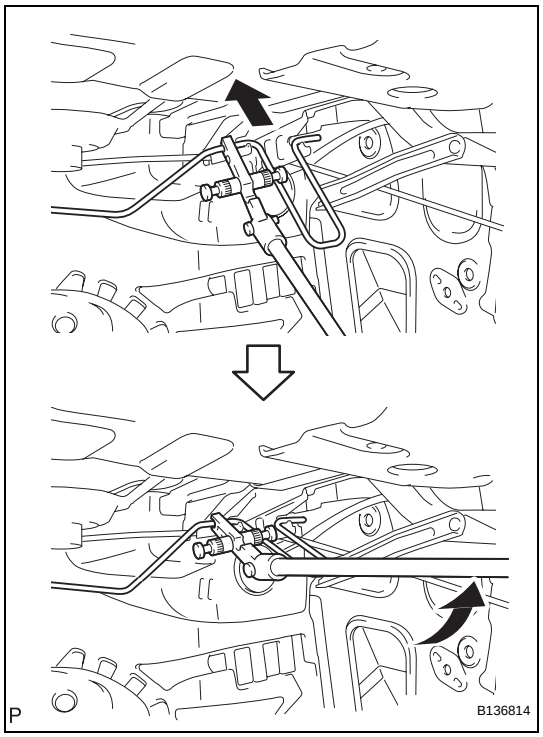

(d) Using SST, install the luggage door hinge torsion bar RH to the luggage door hinge and body LH side as shown in the illustration.
SST 09804-24010

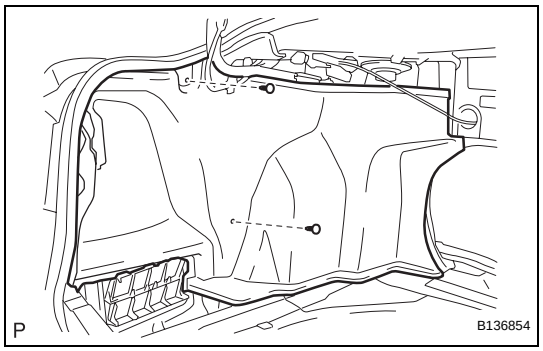

4. INSTALL LUGGAGE COMPARTMENT INNER TRIM COVER LH

(a) Install the luggage compartment inner trim cover LH with the 2 clips.

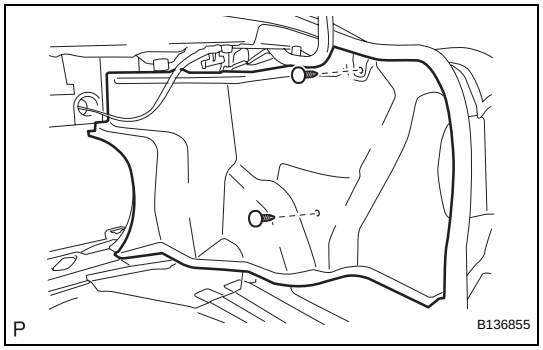

5. INSTALL LUGGAGE COMPARTMENT INNER TRIM COVER RH

(a) Install the luggage compartment inner trim cover RH with the 2 clips.

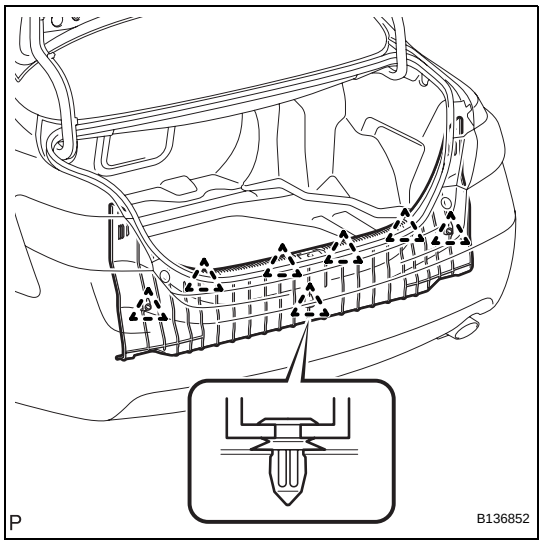

6. INSTALL REAR FLOOR FINISH PLATE

(a) Engage the 7 clips and install the rear floor finish plate.

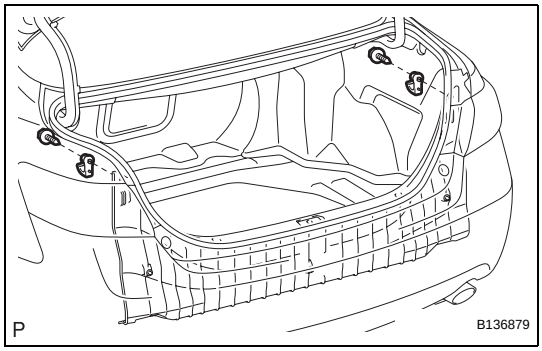

7. INSTALL NO. 1 LUGGAGE COMPARTMENT TRIM HOOK

(a) Install the 2 No. 1 luggage compartment trim hooks with the 2 screws.

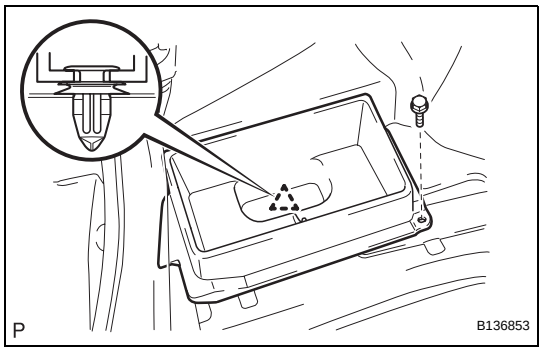

8. INSTALL LUGGAGE COMPARTMENT SIDE TRAY ASSEMBLY

(a) Engage the clip and install the luggage compartment side tray assembly.

(b) Install the bolt.

9. INSTALL SPARE WHEEL COVER ASSEMBLY

10. INSTALL SPARE WHEEL COVER CLAMP

11. INSTALL LUGGAGE COMPARTMENT FLOOR MAT