G-Class

Operator's Manual

Mercedes-Benz

Symbols

Registered trademarks:

- BabySmart™ is a registered trademark of Siemens Automotive Corporation.
- Bluetooth® is a registered trademark of Bluetooth SIG Inc.
- ESP® is a registered trademark of Daimler AG.
- HomeLink® is a registered trademark of Prince, a Johnson Controls Company.
- SIRIUS and associated brands are registered trademarks of SIRIUS XM Radio Inc.

In this Operator's Manual, you will find the following symbols:

⚠ **WARNING**

Warning notes draw your attention to hazards that endanger your health or life, or the health or life of others.

! These warning notes draw your attention to hazards that could cause damage to your vehicle.

ⓘ This symbol indicates useful instructions or further information that could be helpful to you.

▶	This symbol designates an instruction you must follow.
▶	Several consecutive symbols indicate an instruction with several steps.
▷ Page	This symbol tells you where you can find further information on a topic.
▷▷	This symbol indicates a warning or an instruction that is continued on the next page.
`Display`	This font indicates a display message in the multifunction display/COMAND display.

Welcome to the world of Mercedes-Benz

Before you drive off, please familiarize yourself with your vehicle and read this manual, especially the safety and warning notices. This will help you to obtain the maximum pleasure from your vehicle and avoid endangering yourself and others.

The equipment or model designation of your vehicle may differ according to:

- model
- order
- country variant
- availability

Mercedes-Benz is constantly updating its vehicles to the state of the art.

Mercedes-Benz therefore reserves the right to introduce changes in the following areas:

- design
- equipment
- technical features

Therefore, you cannot base any claims on the illustrations or text content in this Operator's Manual.

The following are integral components of the vehicle:

- Operator's Manual
- Brief Instructions[1]
- Maintenance Booklet
- Equipment-dependent supplements

Keep these documents in the vehicle at all times. When you sell the vehicle, always pass the documents on to the new owner.

The technical documentation team at Daimler AG wishes you safe and pleasant motoring.

Mercedes-Benz USA, LLC

Mercedes-Benz Canada, Inc.

A Daimler Company

[1] Canada only.

4635842872

Index 4

Introduction 17

At a glance 23

Safety 31

Opening/closing 59

Seats, steering wheel and mirrors 73

Lights and windshield wipers 87

Climate control 103

Driving and parking 113

On-board computer and displays 151

Stowing and features 187

Maintenance and care 209

Breakdown assistance 223

Wheels and tires 241

Technical data 269

1, 2, 3 ...

115 V socket 197
12 V socket 196
4ETS (Electronic Traction System)
Function/notes 56
4MATIC (permanent four-wheel drive) 141

A

ABS (Anti-lock Braking System)
Display message 166
Function/notes 54
Warning lamp 181
Active service system
see Service interval display
Additives
Engine oil 275
Adjusting the seat 76
Air bags
Front air bag (driver, front passenger) 35
Important safety notes 34
PASSENGER AIR BAG OFF-indicator lamp 37
Safety guidelines 33
Window curtain air bag 37
Air-conditioning system
see Climate control
Air pressure
see Tire pressure
Air vents 111
Important safety notes 110
Rear 111
Setting 110
Setting the center air vents 111
Setting the side air vents 111
Alarm system
see ATA
Anti-lock Braking System
see ABS
Anti-Theft Alarm system
see ATA
Approach/departure angle 138
Ashtray 195
ATA (Anti-Theft Alarm system)
Activating/deactivating 57
Function 57
Switching off the alarm 57
Authorized Mercedes-Benz Center
see Qualified specialist workshop
AUTO lights
Display message 168
Automatic car wash 217
Automatic transmission
Driving tips 121
Emergency running mode 124
Important safety notes 119
Kickdown 121
Malfunction 124
Pulling away 116
Releasing the parking lock manually 124
Selector lever 120
Automatic transmission emergency mode 124

B

Backup lamp
Display message 170
BAS (Brake Assist System) 54
Battery
Charging 231
Checking (SmartKey) 62
Display message 172
Important safety guidelines (SmartKey) 62
Important safety notes 230
Jump-starting 233
Replacing (SmartKey) 62
Belt
see Seat belts
Brake fluid
Display message 166
Notes 275
Brake fluid level 215
Brake lamps (display message) 168
Brakes
ABS 54
BAS 54
Brake fluid (notes) 275
Display messages 166

High-performance brake system 132
Important safety notes 130
Maintenance 131
Parking brake 128
Warning lamp 180
Brush guard 203
Bulbs
Backup lamp 99
Brake lamp 98
Cornering light function 96
Fog lamps 96
Overview 95
Rear fog lamp 99
Tail lamp 98
Turn signal lamp 96

C

CAC
(Customer Assistance Center) 21
California
Important notice for retail customers and lessees 18
Capacities
see Technical data
Care
Carpets 222
Car wash 217
Chrome parts 220
Display 220
Gear or selector lever 221
Headlamps 220
Matte finish 219
Notes 216
Paint 218
Plastic trim 221
Power washer 218
Rear view camera 220
Roof lining 222
Seat belt 222
Seat covers 221
Sensors 220
Steering wheel 221
Tail pipes 220
Trim strips 221
Washing by hand 217
Wheels 218
Windows 219
Wiper blades 219
Wooden trim 221
Cargo compartment cover 192
Cargo compartment enlargement ... 190
Cargo tie down rings 192
CD player/CD changer
Operating (on-board computer) 157
Center console
Overview 28
Central locking
Automatic locking (on-board computer) 161
SmartKey 60
Changing bulbs
Headlamps 94
Changing gears 121
Checklist
After driving off-road 136
Before driving off-road 136
Child-proof locks
Rear doors 52
Children
In the vehicle 47
Restraint systems 47
Child seat
Automatic recognition 37
Automatic recognition/air bag deactivation, self-test 39
LATCH-type (ISOFIX) child seat anchors 50
Special seat belt retractor 49
Top Tether 51
Troubleshooting 40
Chrome parts (cleaning instructions) 220
Cigarette lighter 195
Climate control
Activating/deactivating 106
Controlling automatically 107
Cooling with air dehumidification . . 106
Defrosting the windows 108
Defrosting the windshield 108
Dual-zone automatic climate control 105
Important safety notes 104
Indicator lamp 107

Problems with "cooling with air dehumidification" 107
Problem with the rear window defroster 109
Refrigerant 275
Setting the air distribution 107
Setting the airflow 108
Setting the air vents 110
Setting the temperature 107
Switching air-recirculation mode on/off 110
Switching the rear window defroster on/off 109
Switching the residual heat function on/off 110
Windshield defroster 108
Cockpit
Overview 24
Consumption statistics (on-board computer) 162
Convenience closing feature 69
Convenience opening feature 69
Coolant (engine)
Checking the level 213
Display message 170
Notes 276
Temperature gauge 152
Cooling
see Climate control
Cornering lamps 92
Correct use 21
Cruise control
Cruise control lever 140
Display message 174
Function/notes 139
Cup holders 193
Customer Assistance Center (CAC) 21
Customer Relations Department 21

D

Daytime running lamps
Switching on/off (on-board computer) 160
Defrosting the windshield 108
Delayed switch-off
Exterior lighting (on-board computer) 160
Interior lighting (on-board computer) 161
Differential locks 148
Digital speedometer 156
Display (cleaning instructions) 220
Display messages
Calling up (on-board computer) 165
Driving systems 174
General notes 165
Hiding (on-board computer) 165
Safety systems 166
Service interval display 215
Distance recorder 156
Door control panel
Overview 30
Doors
Automatic locking 66
Automatic locking (on-board computer) 161
Display message 177
Emergency locking 66
Emergency unlocking 66
Important safety notes 65
Opening (from inside) 65
Drinking and driving 129
Drinks holder
see Cup holder
Driving abroad 88
Driving in mountainous terrain
Approach/departure angle 138
Driving downhill 139
Gradient-climbing capability (maximum) 139
Driving on flooded roads 133
Driving safety systems
4ETS (Electronic Traction System) ... 56
ABS (Anti-lock Braking System) 54
BAS (Brake Assist System) 54
Electronic brake force distribution ... 57
ESP® (Electronic Stability Program) 55
Important safety information 53
Overview 53

Driving systems
Cruise control 139
Rear view camera 144
Driving tips
Automatic transmission 121
Brakes 132
Downhill gradient 130
Driving on flooded roads 133
Driving on sand 137
Driving on wet roads 132
Driving over obstacles 137
General 129
Gravel roads 137
Hydroplaning 132
Icy road surfaces 134
Off-road driving 135
Off-road fording 133
Tire ruts 137
Wet road surface 131
DVD audio (on-board computer) 157
DVD video (on-board computer) 157

E

EASY-ENTRY feature 83
Activating/deactivating (on-board computer) 161
EASY-EXIT feature 83
EBD (electronic brake force distribution)
Function/notes 57
Electrical fuses
see Fuses
Electronic Stability Program
see ESP®
Electronic Traction Support
see 4ETS
Emergency call
see mbrace
Emergency release
Fuel filler flap 126
Vehicle 66
Emergency Tensioning Devices
Function 47
Safety guidelines 33
Emissions control
Service and warranty information 17
Engine
Check Engine warning lamp 184
Display message 170
Irregular running 118
Starting problems 118
Starting the engine with the SmartKey 116
Switching off 128
Engine electronics
Problem (malfunction) 118
Engine number 272
Engine oil
Adding 213
Additives 275
Checking the oil level 211
Display message 172
Notes about oil grades 275
Viscosity 275
ESP® (Electronic Stability Program)
Activating/deactivating 56
Display message 166
Important safety information 55
Exhaust check 130
Exhaust tail pipe (cleaning instructions) 220
Exterior lighting
Delayed switch-off (on-board computer) 160
Exterior mirrors
Adjusting 84
Dipping (automatic) 84
Out of position (troubleshooting) 84
Storing settings (memory function) 85
Storing the parking position 85

F

First-aid kit 224
Flat tire
Changing a wheel/mounting the spare wheel 227
Preparing the vehicle 226
Raising the vehicle 227
Floormat 207
Front fog lamp (display message) ... 169

Fuel
Additives 274
Important safety notes 273
Premium-grade unleaded gasoline . 273
Refueling 124
Specifications 274
Troubleshooting 127
Fuel/water separator
Service 216
Fuel consumption
Notes 129
Fuel filler cap (display message) 174
Fuel filler flap
Emergency release 126
Opening/closing 125
Fuel filter
Display message 174
Fuel level
Calling up the range (on-board computer) 163
Fuse allocation chart 238
Fuse box
Battery case 239
Dashboard 238
Front-passenger footwell 238
Transmission tunnel 239
Fuse extractor 238
Fuses
Dashboard fuse box 238
Fuse allocation chart 238
Fuse box in the front-passenger footwell 238
Fuse box in the transmission tunnel 239
In the battery case 239
Notes 237

G

Garage door opener
Clearing the memory 207
Notes 204
Opening/closing the garage door .. 207
Programming the remote control ... 205
Gear or selector lever (cleaning guidelines) 221
Genuine Mercedes-Benz parts 270
Genuine wood trim and trim strips (cleaning instructions) 221
Glove box 189
Gradient-climbing capability (maximum) 139
GTW (Gross Trailer Weight) (definition) 263

H

Handbrake
see Parking brake
Hazard warning lamps 91
Headlamp delayed switch-off
see Exterior lighting delayed switch-off
Headlamps
Adding fluid to cleaning system 214
Cleaning 220
Cleaning system (function) 91
Fogging up 92
Protective grille 98
Headlamps (automatic) 89
Head restraints
Adjusting (angle) 77
Adjusting (rear) 78
Installing/removing (rear) 78
Luxury 79
Resetting (front) 78
see NECK-PRO head restraints
Heating
see Climate control
Heating, windshield
see Windshield heating
High beam flasher 91
High-beam headlamps (display message) 169
High-mounted brake lamp
Display message 168
Hill start assist 117
Hood
Closing 211
Display message 177
Opening 210
Hydroplaning 132

I

Immobilizer 57
Instrument cluster
Overview 25
Selecting the language (on-board computer) 159
Instrument cluster lighting 159
Interior lighting
Adjusting 92
Automatic control 93
Cargo compartment lamp 93
Delayed switch-off (on-board computer) 161
Manual control 93
Reading lamp 93
Rear interior lighting 94

J

Jack
Storage location 224
Using 227
Jump-starting 233

K

Key positions
SmartKey 115
Kickdown 121

L

Lamps
Display message 168
LATCH-type (ISOFIX) child seat anchors 50
License plate lamp (display message) 169
Lights
Activating/deactivating the interior lighting delayed switch-off (on-board computer) 161
Cornering light function 92
Daytime running lamps 89
Display message 168
Driving abroad 88
Fog lamps 90
Hazard warning lamps 91
High-beam headlamps 91
Light switch 88
Low-beam headlamps 89
Rear fog lamp 90
Turn signals 91
Limited Warranty 21
Load anchorage 192
Loading guidelines 188
Locking
Automatic 66
Emergency locking 66
From inside the vehicle (central locking button) 65
Low-beam headlamps
Automatic headlamps 89
Display message 168
Driving abroad 88
Switching on/off 89
Symmetrical 88
Lubricant additives
see Additives
Lumbar support
4-way lumbar support 79
Luxury head restraints 79

M

M+S tires 244
Malfunction messages
see Display messages
Malfunctions
see Display messages
Malfunctions relevant to safety
Reporting 21
Matte finish (cleaning instructions) 219
mbrace
Call priority 202
Display message 167
Downloading destinations (COMAND) 202
Emergency call 199
Important safety notes 198
Locating a stolen vehicle 203
MB info call button 201
Roadside Assistance button 200
Self-test 198

System 198
Vehicle remote unlocking 202
Mechanical key
Function/notes 61
Loss 64
Memory card
Operating (on-board computer) 157
see separate operating instructions
Memory function 85
Menu (on-board computer)
Audio 156
DVD 157
Message memory 165
Navigation 158
Overview of menus 155
Resetting to factory settings 158
Settings 158
Standard display 156
Telephone 163
Trip computer 162
Messages
see Display messages
Mirrors
Sun visor 194
Mobile phone
Menu (on-board computer) 163
MP3
Operating (on-board computer) 157
see separate operating instructions
Multicontour seat 79
Multifunction display 154
Multifunction steering wheel
Operating the on-board computer . 153
Overview 27

N

Navigation
On-board computer 158
see separate operating instructions
NECK-PRO head restraints
Operation 40
Resetting after being triggered 41
Notes on breaking-in a new vehicle 114

O

Occupant safety
Children in the vehicle 47
System overview 32
Octane number (fuel) 274
Odometer 156
Off-road
4MATIC 141
Differential locks 148
Off-road ABS 54
Off-road driving
Checklist 136
Driving on sand 137
Important safety notes 134
Off-road fording 133
Oil
see Engine oil
On-board computer
Audio menu 156
Convenience submenu 161
Display messages 165
Factory settings 158
Important safety notes 152
Message memory menu 165
Navigation menu 158
Operation 153
Overview of menus 155
Settings menu 158
Standard display menu 156
Status bar 159
Telephone menu 163
Trip computer menu 162
Vehicle submenu 161
Video DVD operation 157
On-board computer language 159
On-board diagnostics interface 20
Operating safety
Important safety notes 19
On-board diagnostics interface 20
Operating system
see On-board computer
Outside temperature
Calling up (on-board computer) 156
Display 153
Overhead control panel
Overview 29

Override feature
Rear side windows 52

P

Paint code number 271
Paintwork (cleaning instructions) ... 218
Panic alarm 52
Parcel net 190
Parking 127
Parking aid
Exterior mirror on the front-passenger side 85
Rear view camera 144
Parking brake
Applying 128
Display message 166
Parking lamp (display message) 169
Parking lock
Releasing manually 124
Parking position
Exterior mirror on the front-passenger side 85
Pedals 129
Permanent four-wheel drive
see 4MATIC
Permissible gross vehicle weight rating 252
Plastic trim (cleaning instructions) . 221
Power washers 218
Product information 17
Programming
SmartKey 61
Pulling away
Automatic transmission 116

Q

Qualified specialist workshop 20

R

Radio
Changing stations (on-board computer) 156
see separate operating instructions
Range (on-board computer) 163
Rear bench seat
Folding forward 191
Rear compartment
Setting the air vents 111
Rear door
Display message 177
Important safety notes 67
Opening/closing 67
Rear fog lamp (display message) 169
Rear lamps
see Tail lamps
Rear seat bench
Folding into an upright position 191
Rear view camera
Function/notes 144
Rear view camera (cleaning instructions) 220
Rear-view mirror
Adjusting 84
Dipping (automatic) 84
Rear window defroster
Problem (malfunction) 109
Switching on/off 109
Rear window wiper 100
Refueling 124
Remote control
Programming (garage door opener) 205
Reporting
Malfunctions relevant to safety 21
Reserve fuel
Display message 174
Warning lamp 184
Residual heat
Switching on/off 110
Restraint system
see SRS (Supplemental Restraint System)
Roadside Assistance (breakdown) 18
Roof carrier 193
Roof lining and carpets (cleaning guidelines) 222
Route
see Route guidance (on-board computer)
Route guidance (on-board computer) 158

S

Safety
Children in the vehicle 47
Child restraint systems 47
Overview of occupant safety systems 32
Safety systems
see Driving safety systems
Seat backrest
Folding back 191
Folding forwards 191
Seat belts
Adjusting the height 45
Belt force limiters 47
Cleaning 222
Correct usage 42
Emergency Tensioning Devices 47
Fastening 43, 44
Fastening, front 44
Fastening in the rear, center 44
Important safety guidelines 41
Releasing 46
Safety guidelines 33
Special seat belt retractor 49
Warning lamp 178
Warning lamp (function) 46
Seat heating
Indicator lamp (malfunction) 81
Seats
Adjusting the 4-way lumbar support 79
Adjusting the head restraint 77
Cleaning the cover 221
Correct driver's seat position 74
Important safety notes 75
Multicontour seat 79
Storing settings (memory function) 85
Switching seat heating on/off 80
Switching seat ventilation on/off 81
Seat ventilation
Indicator lamp (malfunction) 81
Sensors (cleaning instructions) 220
Service indicator
see Service interval display
Service interval display 215
Displaying a service message (on-board computer) 216
Service products
Brake fluid 275
Capacities 273
Coolant (engine) 276
Engine oil 275
Fuel 273
Important safety notes 272
Notes 272
Refrigerant (air-conditioning system) 275
Washer fluid 277
Settings
Calling up a stored setting 86
Factory (on-board computer) 158
On-board computer 158
Setting the unit (on-board computer)
Speedometer 159
Shift ranges 121
Side marker lamp (display message) 169
Side windows
Convenience closing feature 69
Convenience opening feature 69
Important safety information 68
Opening/closing 68
Troubleshooting 69
Ski rack 193
Sliding sunroof
Important safety notes 70
Opening/closing 70
Operating manually 71
SmartKey
Changing the battery 62
Changing the programming 61
Checking the battery 62
Convenience closing feature 69
Convenience opening feature 69
Important safety notes 60
Loss 64
Malfunction 64
Starting the engine 116
Snow chains 245

Sockets
Front-passenger footwell 196
Luggage compartment 196
Rear compartment 196
SOS
see mbrace
Spare fuses 238
Spare wheel
Mounting 226
Notes/data 268
Spare wheel bracket at the rear 225
Stainless-steel spare hub cap 225
Specialist workshop 20
Speedometer
Additional speedometer (on-board computer) 156
Setting the unit (on-board computer) 159
SPEEDTRONIC
Display message 174
SRS (Supplemental Restraint System)
Display message 167
Introduction 32
Warning lamp 183
Warning lamp (function) 32
Standard display (on-board computer) 156
Starting the engine
Important safety notes 115
Station
see Radio
Status line (on-board computer)
Selecting the display 159
Steering wheel
Adjusting 82
Buttons (on-board computer) 153
Cleaning 221
Important safety notes 81
Steering wheel heating 82
Storing settings (memory function) 85
Steering wheel heating
Indicator lamp (malfunction) 83
Stowage compartments
Armrest (under) 189
Cup holders 193
Glove box 189
Important safety information 189
Stowage pockets 190
Submenu (on-board computer)
Convenience 161
Vehicle 161
Summer opening
see Convenience opening feature
Summer tires 244
Sun visor 194
Supplemental Restraint System
see SRS (Supplemental Restraint System)
Surround lighting
Switching on/off (on-board computer) 160
SUV
(Sport Utility Vehicle) 19
Switching air-recirculation mode on/off 110
Switching off the alarm (ATA) 57

T

Tachometer 152
Tail lamps
see Lights
Tail lamps (Display message) 170
Technical data
G 500 277
G 55 AMG 277
Tires 266
Wheels 266
TELEAID
Call priority 202
Display message 167
Downloading destinations (COMAND) 202
Emergency call 199
Important safety notes 198
Locating a stolen vehicle 203
MB info call button 201
Roadside Assistance button 200
Self-test 198
System 198
Vehicle remote unlocking 202
Telephone
Menu (on-board computer) 163

Telephone compartment 189
Temperature
Coolant 152
Displaying the outside temperature 156
Outside temperature 153
Setting (climate control) 107
Theft deterrent systems
ATA (Anti-Theft Alarm system) 57
Immobilizer 57
Theft-deterrent systems
Tow-away alarm 58
Tilt/sliding sunroof
see Sliding sunroof
Tire pressure
Calling up (on-board computer) 249
Checking 248
Checking manually 249
Display message 175
Maximum 248
Notes 246
Tire pressure monitoring system
Function/notes 249
Restarting 251
Warning lamp 185
Tires
Aspect ratio (definition) 264
Average weight of the vehicle occupants (definition) 262
Bar (definition) 262
Characteristics 262
Checking 243
Definition of terms 262
Direction of rotation 265
Distribution of the vehicle occupants (definition) 265
DOT, Tire Identification Number (TIN) 261
DOT (Department of Transportation) (definition) 262
GAWR (Gross Axle Weight Rating) (definition) 263
GTW (Gross Trailer Weight) (definition) 263
GVW (Gross Vehicle Weight) (definition) 263
GVWR (Gross Vehicle Weight Rating) (definition) 263
Increased vehicle weight due to optional equipment (definition) 263
Kilopascal (kPa) (definition) 263
Labeling (overview) 258
Load bearing index (definition) 264
Load index 261
Load index (definition) 263
Maximum loaded vehicle weight (definition) 263
Maximum load on a tire (definition) 264
Maximum permissible tire pressure (definition) 264
Maximum tire load 256
Maximum tire load (definition) 264
Optional equipment weight (definition) 264
PSI (pounds per square inch) (definition) 264
Replacing 265
Service life 244
Sidewall (definition) 264
Speed rating (definition) 263
Storing 266
Structure and characteristics (definition) 262
Technical data 266
Temperature 258
TIN (Tire Identification Number) (definition) 264
Tire bead (definition) 264
Tire pressure (definition) 264
Tire pressures (recommended) 245, 262
Tire size designation, load-bearing capacity, speed rating 259
Tire tread 243
Tire tread (definition) 264
Total load limit (definition) 265
Traction 257
Traction (definition) 264
Tread wear 257
TWR (permissible trailer drawbar noseweight) (definition) 265
Uniform Tire Quality Grading Standards 257
Uniform Tire Quality Grading Standards (definition) 262

Unladen weight (definition) 263
Wear indicator (definition) 265
Wheel rim (definition) 263
see Flat tire
Top Tether 51
Tow-away alarm 58
Towing
Important safety guidelines 235
In the event of malfunctions 237
Towing eye
Front 235
Rear 235
Trailer loads and drawbar noseweights 256
Transfer case
Display message 178
Shift ranges 145
Transmission position display 120
Transmission positions 120
Transporting the vehicle 236
Traveling uphill
Brow of hill 139
Trip computer (on-board computer) 162
Trip odometer
Calling up 156
Turn signal
Display message 168
Turn signals 91
TWR (Tongue Weight Rating) (definition) 265
Type identification plate
see Vehicle identification plate

U

Ultrasonic backing up aid
Function/notes 142
Malfunction 144
Range of the sensors 142
Warning display 143
Unlocking
Emergency unlocking 66
From inside the vehicle (central unlocking button) 65

V

Vanity mirror
Sun visor 194
Vehicle
Data acquisition 22
Emergency unlocking 66
Equipment 17
Individual settings (on-board computer) 158
Loading 252
Lowering 229
Maintenance 18
Parking for a long period 128
Raising 227
Reporting problems 21
Towing away 235
Tow-starting 235
Transporting 236
Vehicle dimensions
Technical data 277
Vehicle identification number
see VIN
Vehicle identification plate 271
Vehicle tool kit 224
Vehicle weights
Technical data 277
Ventilation
Setting the air distribution 107
Setting the airflow 108
Video (DVD) 157
VIN 271

W

Warning and indicator lamps
ABS 181
Brakes 180
Check Engine 184
ESP® 182
ESP® OFF 182
Fuel tank 184
Overview 26
PASSENGER AIRBAG OFF 37
Reserve fuel 184
Seat belt 178

SRS 183
Tire pressure monitor 185
Warranty 270
Washer fluid
Display message 177
Wheel bolt tightening torque 229
Wheels
Changing a wheel 227
Checking 243
Cleaning 218
Important safety notes 242
Interchanging/changing 265
Mounting a wheel 229
Removing a wheel 229
Storing 266
Technical data 266
Tightening torque 229
Window curtain air bag
Operation 37
Windows
see Side windows
Windows (cleaning instructions) 219
Windshield heating 108
Windshield washer system 214
Windshield wipers
Important safety notes 99
Replacing the wiper blades 100
Switching on/off 100
Troubleshooting 101
Winter
Driving in winter 134
Winter operation 244
Winter tires
M+S tires 244
Wiper blades
Cleaning 219

Product information

Mercedes-Benz recommends that you use genuine Mercedes-Benz parts, conversion parts and accessories that have been approved for your vehicle.

Mercedes-Benz tests genuine parts as well as conversion parts and accessories that have been specifically approved for your vehicle for their reliability, safety and suitability. Despite ongoing market research, Mercedes-Benz is unable to assess other parts. Therefore, Mercedes-Benz accepts no responsibility for the use of such parts in Mercedes-Benz vehicles, even if they have been independently or officially approved. The use of non-approved parts could affect your vehicle's operating safety. Mercedes-Benz therefore recommends that you use genuine Mercedes-Benz parts, conversion parts and accessories that have been approved for your vehicle. Genuine Mercedes-Benz parts, approved conversion parts and accessories are available from any authorized Mercedes-Benz Center. Here, you will receive advice about permissible technical modifications, and the parts will be professionally installed.

Operator's Manual

Notes on the Operator's Manual

Before you first drive off, read this Operator's Manual carefully and familiarize yourself with your vehicle.

For your own safety and a longer vehicle life, follow the instructions and warning notices in this manual. Disregarding them may lead to damage to the vehicle or personal injury. Vehicle damage resulting from the disregard of the instructions is not covered by the Mercedes-Benz Limited Warranty.

Vehicle equipment

This Operator's Manual describes all models and all standard and optional equipment of your vehicle available at the time of publication of the Operator's Manual.

Country-specific differences are possible. Please note that your vehicle may not be equipped with all features described. This also applies to safety-related systems and functions. The equipment in your vehicle may therefore differ from that shown in the descriptions and illustrations. All the systems found in your vehicle are listed in the original purchase agreement of your vehicle. Should you have any questions concerning equipment and operation, please consult an authorized Mercedes-Benz Center.

The Operator's Manual and the Maintenance Booklet are important documents and should be kept in the vehicle.

Service and vehicle operation

Service and literature

Your vehicle is covered under the terms of the warranties printed in the Service and Warranty Information booklet. Your authorized Mercedes-Benz Center will exchange or repair any defective parts originally installed in the vehicle in accordance with the terms of the following warranties:

- New Vehicle Limited Warranty
- Emission Systems Warranty
- Emission Performance Warranty
- California, Connecticut, Maine, Massachusetts, New York, Pennsylvania, Rhode Island and Vermont warranty on the emission control system
- State warranty enforcement laws (lemon laws)

Information for customers in California

In California, you have the right to exchange a vehicle or receive a refund of the purchase or leasing price if Mercedes-Benz USA, LLC and/or an authorized workshop or maintenance facility cannot, after several authorized repairs, rectify considerable damage to or malfunctions of the vehicle that are covered by the contractual warranty. Customers who purchase or lease a vehicle may have their vehicles repaired within 18 months from delivery or up until an odometer reading of 29,000 km (i.e. 18,000 miles), whichever comes first, if:

(1) the serious defect or damage can result in deadly or serious injury to the vehicle occupants while driving AND this defect has already been repaired at least twice AND Mercedes-Benz, LLC has been informed in writing of the necessity of a repair.

(2) the defect or damage, though less serious than (1) above, has already been repaired at least four times AND Mercedes-Benz has been informed in writing of the necessity of a repair.

(3) the vehicle cannot be used for longer than 30 calendar days because of repair work resulting from this or other serious defects or damage.

Please send your written notice to:

Mercedes-Benz USA, LLC

Customer Assistance Center

One Mercedes Drive

Montvale, NJ 07645-0350

Maintenance

The Service and Warranty Booklet describes all the necessary maintenance work which should be done at regular intervals.

Always have the Service and Warranty Booklet with you when you bring the vehicle to an authorized Mercedes-Benz Center. The service advisor will record every service for you in the Service and Warranty Booklet.

Roadside Assistance

The Mercedes-Benz Roadside Assistance Program offers technical help in the case of a breakdown. Your calls to the toll-free Roadside Assistance Hotline are answered by our agents 24 hours a day, 365 days a year.

1-800-FOR-MERCedes(1-800-367-6372) (USA)

1-800-387-0100 (Canada)

You can find further information in the Mercedes-Benz Roadside Assistance Program brochure (USA) or the "Roadside Assistance" section in the Service and Warranty booklet (Canada). You will find both in the vehicle document wallet.

In accordance with standard program guidelines, Roadside Assistance is prepared to provide vehicle service up until a reasonable distance from the next paved roadway. We will make every effort to assist in a breakdown situation. However, the accessibility of your vehicle will be determined by our authorized Mercedes-Benz Service technician or the tow service provider on a case-by-case basis.

Additional charges may be applicable for a breakdown location determined not to be a reasonably accessible roadside location as determined by our authorized technician and tow service provider.

Change of address or change of ownership

In the event of a change of address, please send us the "Change of Address Notice" found in the Service and Warranty Information Booklet, or simply call the Mercedes-Benz Customer Assistance Center (USA) at the hotline number 1-800-FOR-MERCedes (1-800-367-6372) or Customer Service (Canada) at

1-800-387-0100. This will assist us in contacting you in a timely manner should the need arise.

If you sell your Mercedes, please leave the entire literature in the vehicle so that it is available to the next owner.

If you bought this vehicle used, be sure to send in the "Notice of Purchase of Used Truck" found in the Service and Warranty Information Booklet, or call the Mercedes-Benz Customer Assistance Center (USA) at 1-800-FOR-MERCedes(1-800-367-6372) or Customer Service (Canada) at 1-800-387-0100.

Vehicle operation outside the USA and Canada

If you plan to operate your vehicle in foreign countries, please be aware that:

- service facilities or replacement parts may not be readily available.
- unleaded fuel for vehicles with a catalytic converter may not be available. Leaded fuel may cause damage to the catalytic converter.
- the fuel may have a considerably lower octane rating. Unsuitable fuel can cause engine damage.

Some Mercedes-Benz models are available for delivery in Europe through our European Delivery Program. For details, consult an authorized Mercedes-Benz Center or write to one of the following addresses.

In the USA:

Mercedes-Benz USA, LLC

European Delivery Department

One Mercedes Drive

Montvale, NJ 07645-0350

In Canada:

Mercedes-Benz Canada, Inc.

European Delivery Department

98 Vanderhoof Avenue

Toronto, Ontario M4G 4C9

Sport Utility Vehicle

⚠ **WARNING**

This Sport Utility Vehicle is designed for both on-road and off-road use. It can go places and perform tasks for which conventional 2-wheel drive passenger cars are not intended. This vehicle will handle and maneuver differently from conventional passenger cars in driving conditions which may occur on streets, highways and off-road use.

This vehicle has a higher ground clearance and a higher center of gravity than many passenger cars. As with other vehicles of this type, if you make sharp turns at excessive speeds or abrupt maneuvers, the vehicle may roll over or may go out of control and crash. Utility vehicles have a significantly higher rollover rate than other types of vehicles. Failure to operate this vehicle safely may result in an accident, rollover of the vehicle, and severe or fatal injury.

Before you start to drive this vehicle, read the Operator's Manual. Take time to become familiar with the driving characteristics of this vehicle. Be sure you are familiar with all vehicle controls. Learn how your vehicle handles on different road surfaces. Do not attempt sharp turns at excessive speeds or abrupt maneuvers or other unsafe driving actions that can cause loss of vehicle control. When driving off-road or working the vehicle hard, do not overload it. And, always wear your seat belts at all times. In a rollover crash, an unbelted person is significantly more likely to die than a person wearing a seat belt.

Operating safety

Safety notes

⚠ **WARNING**

Work improperly carried out on electronic components and associated software could cause them to cease functioning. Because the vehicle's electronic components are interconnected, any modifications made may

▷▷

produce an undesired effect on other systems. Electronic malfunctions could seriously impair the operating safety of your vehicle.

Contact an authorized Mercedes-Benz Center for repairs or modifications to electronic components.

Other improper work or modifications on the vehicle could also have a negative impact on the operating safety of the vehicle.

Some safety systems only function when the engine is running. You should therefore never turn off the engine while driving.

⚠ **WARNING**

Heavy blows against the vehicle underbody or tires/wheels may cause serious damage and impair the operating safety of your vehicle. Such blows can be caused, for example, by running over an obstacle, road debris or a pothole.

If you feel a sudden significant vibration or ride disturbance, or you suspect that damage to your vehicle has occurred:

- turn on your hazard warning flashers.
- slow down carefully.
- drive with caution to an area which is a safe distance from the road.

Inspect the vehicle underbody and tires/wheels for possible damage. If the vehicle appears unsafe, have it towed to the nearest authorized Mercedes-Benz Center or other qualified maintenance or repair facility for further inspection or repairs.

On-board diagnostics interface

⚠ **WARNING**

If you connect equipment to the on-board diagnostics interface, it can affect the operation of the vehicle systems. This can impair the operating safety of your vehicle while driving. There is a risk of accident.

Do not connect any equipment to the on-board diagnostics interface.

⚠ **WARNING**

Loose equipment or equipment cables which are connected to the on-board diagnostics interface can obstruct the area around the pedals. The equipment or the cables could get between the pedals in the event of sudden braking or acceleration. You may then no longer be able to brake, operate the clutch or accelerate as intended. There is a risk of accident.

Do not attach any equipment or cables in the driver footwell.

Connecting equipment to the on-board diagnostics interface can lead to emissions monitoring information being reset. This may lead to the vehicle failing to meet the requirements at the next special emissions test or main inspection.

If the engine is switched off and equipment which is connected to the on-board diagnostics interface is used, the starter battery may discharge.

The on-board diagnostics interface is only intended for the connection of diagnostic equipment at a qualified specialist workshop.

Qualified specialist workshop

An authorized Mercedes-Benz Center is a qualified specialist workshop. It has the necessary specialist knowledge, tools and qualifications to correctly carry out the work required on your vehicle. This is especially the case for work relevant to safety.

Observe the notes in the Maintenance Booklet.

Always have the following work carried out at an authorized Mercedes-Benz Center:

- work relevant to safety
- service and maintenance work
- repair work

- alterations, installation work and modifications
- work on electronic components

Proper use

Observe the following information when using your vehicle:

- the safety notes in this manual
- the "Technical data" section in this manual
- traffic rules and regulations
- laws and safety standards pertaining to motor vehicles

⚠ **WARNING**

There are various warning stickers affixed to your vehicle. Their purpose is to alert you and others to various dangers. Therefore, do not remove any warning stickers unless the sticker clearly states that you may do so.

If you remove any warning stickers, you or others could fail to recognize certain dangers and be injured.

Problems with your vehicle

If you should experience a problem with your vehicle, particularly one that you believe may affect its safe operation, we urge you to contact an authorized Mercedes-Benz Center immediately to have the problem diagnosed and rectified. If the problem is not resolved to your satisfaction, please discuss the problem again with a Mercedes-Benz Center or contact us at one of the following addresses.

In the USA:

Customer Assistance Center
Mercedes-Benz USA, LLC
One Mercedes Drive
Montvale, NJ 07645-0350

In Canada:

Customer Relations Department
Mercedes-Benz Canada, Inc.
98 Vanderhoof Avenue
Toronto, Ontario M4G 4C9

Reporting malfunctions relevant to safety

Only for the USA:

The following text is reproduced as required of all manufacturers according to Title 49, Code of U.S. Federal Regulations, Part 575 pursuant to the National Traffic and Motor Vehicle Safety Act of 1966.

Reporting safety defects:

If you believe that your vehicle has a defect which could cause a crash or could cause injury or death, you should immediately inform the National Highway Traffic Safety Administration (NHTSA) in addition to notifying Mercedes-Benz USA, LLC.

If NHTSA receives similar complaints, it may open an investigation, and if it finds that a safety defect exists in a group of vehicles, it may order a recall and remedy campaign. However, NHTSA cannot become involved in individual problems between you, your dealer, or Mercedes-Benz USA, LLC.

To contact NHTSA, you may call the Vehicle Safety Hotline toll-free at 1-888-327-4236(TTY: 1-800-424-9153); go to **http://www.safercar.gov**; or write to: Administrator, NHTSA Headquarters, 1200 New Jersey Avenue, SE, West Building, Washington, DC 20590.

You can find more information on vehicle safety under:

http://www.safercar.gov

Limited Warranty

! Follow the instructions in this manual about the proper operation of your vehicle as well as about possible vehicle damage. Damage to your vehicle that arises from culpable contraventions against these instructions is not covered by Daimler AG's Mercedes-Benz Limited Warranty.

Data stored in the vehicle

Information about electronic data acquisition in the vehicle

(Including California Code Supplement § 9951)

Your vehicle records electronic data. If your vehicle is equipped with mbrace[2] data is transmitted in the event of an accident.

This information serves, for example, to test vehicle systems after an accident and to continually improve vehicle safety.
Daimler AG can access these data and submit them:

- for safety investigations or vehicle diagnoses
- with the agreement of the vehicle owner
- on the instruction of prosecuting authorities
- for use in arbitration of disputes that involve Daimler AG, its subsidiaries or its sales and service organizations
- on the basis of other legislation.

Please observe the mbrace[2] order agreement regarding further details on data that this system records and transmits.

2 The system is called TELEAID in Canada.

Cockpit 24
Instrument cluster 25
Multifunction steering wheel 27
Center console 28
Overhead control panel 29
Door control panel 30

Cockpit

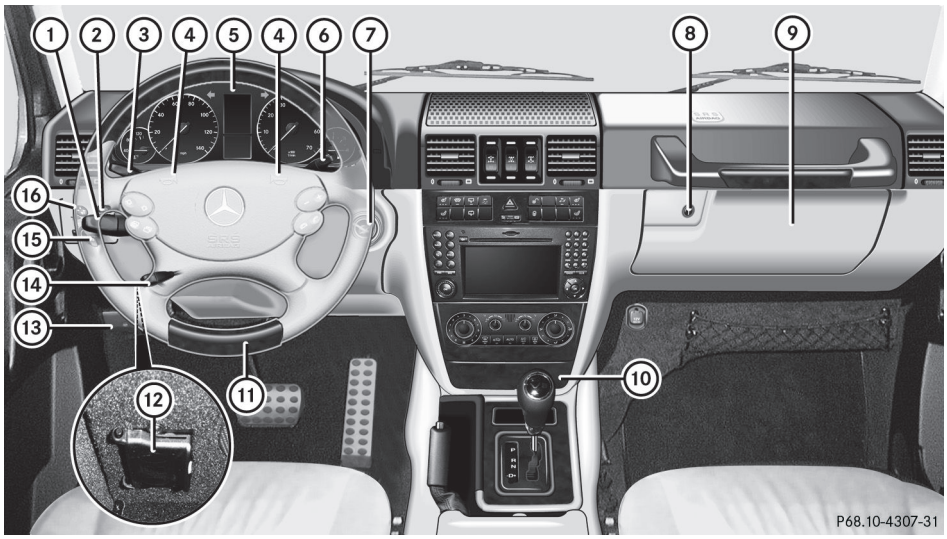

	Function	Page
①	Combination switch	91
②	Cleans the headlamps	91
③	Cruise control lever	139
④	Horn	
⑤	Instrument cluster	25
⑥	Voice Control System lever; see the separate operating instructions	
⑦	Ignition lock	115
⑧	Glove box lock	189

	Function	Page
⑨	Glove box	189
⑩	Center console	28
⑪	Multifunction steering wheel	27
⑫	Diagnostics socket	20
⑬	Opens the hood	210
⑭	Adjusts the steering wheel Steering wheel heating	81
⑮	Light switch	88
⑯	Adjusts the exterior mirrors	84

Instrument cluster

Overview

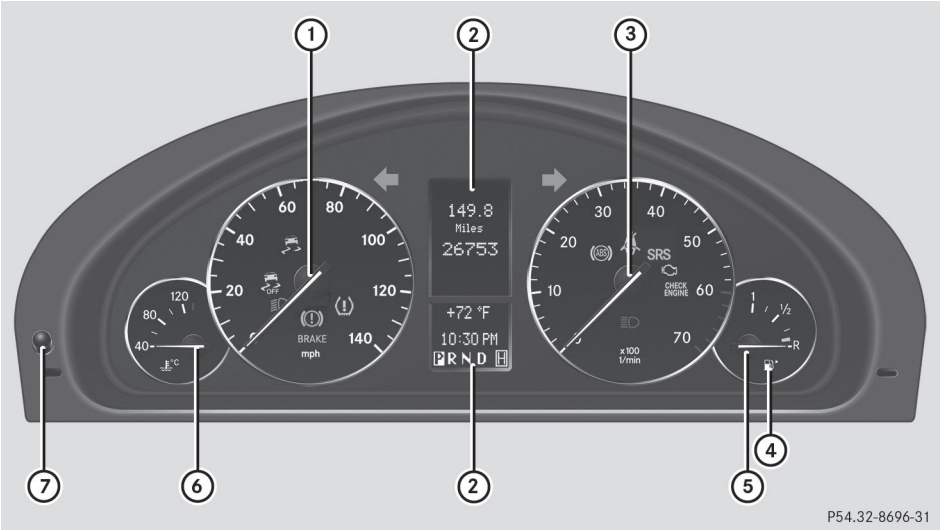

	Function	Page
①	Speedometer	
②	Multifunction display	154
③	Tachometer	152
④	Fuel filler flap location indicator: the fuel filler cap is to the rear on the right	124

	Function	Page
⑤	Fuel gauge	
⑥	Coolant temperature gauge	152
⑦	Reset button	156

Warning and indicator lamps

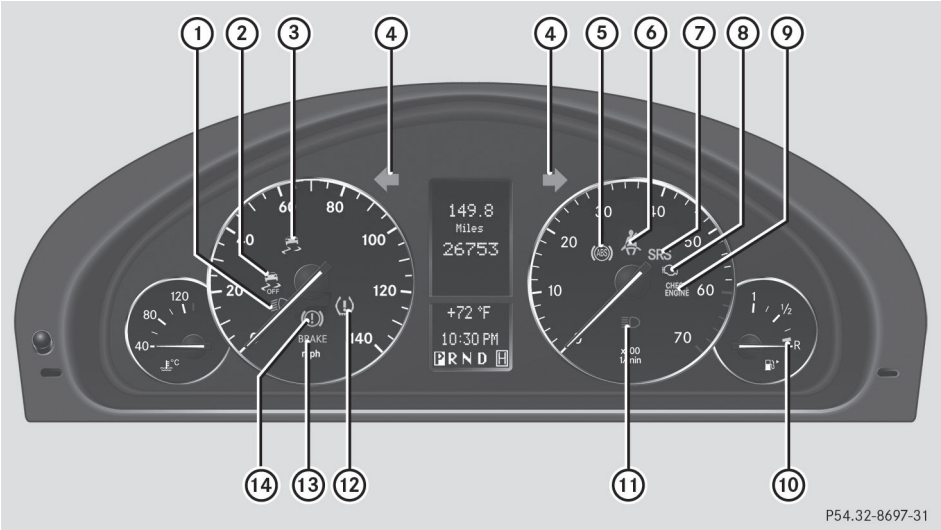

	Function	Page
①	Low-beam headlamps	89
②	ESP® OFF	182
③	ESP®	182
④	Turn signal	91
⑤	ABS	181
⑥	Seat belt	178
⑦	SRS	183
⑧	Check Engine (Canada only)	184

	Function	Page
⑨	Check Engine (USA only)	184
⑩	Reserve fuel	184
⑪	High-beam headlamps	91
⑫	Tire pressure monitor	185
⑬	Brakes (USA only)	180
⑭	Brakes (Canada only)	180

Multifunction steering wheel

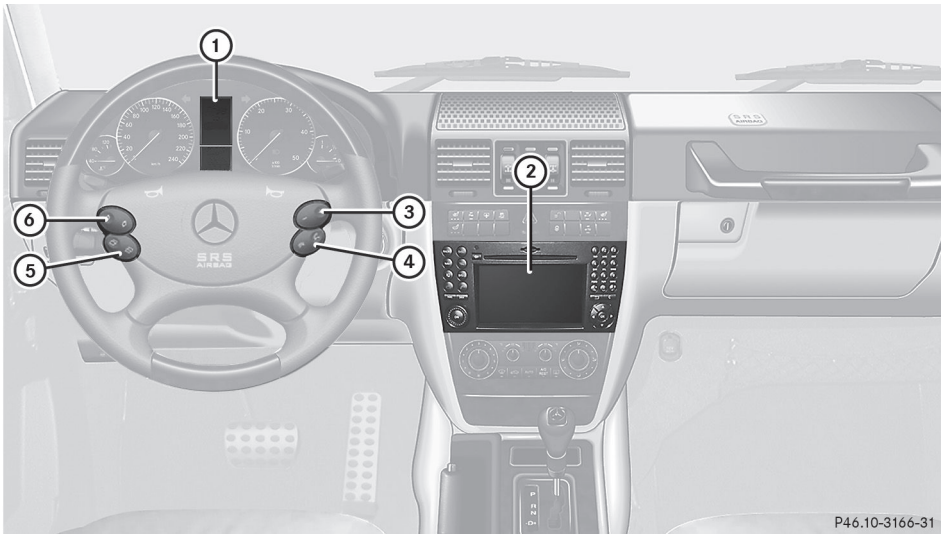

	Function	Page
①	Multifunction display	154
②	COMAND; see the separate operating instructions	
③	[+] [−] Selects submenus in the Settings menu Changes values Adjusts the volume	158

	Function	Page
④	Makes/accepts or rejects/ends a call	163
⑤	Selects a menu: scrolls back and forth	155
⑥	Scrolls back and forth within a menu	155

Center console

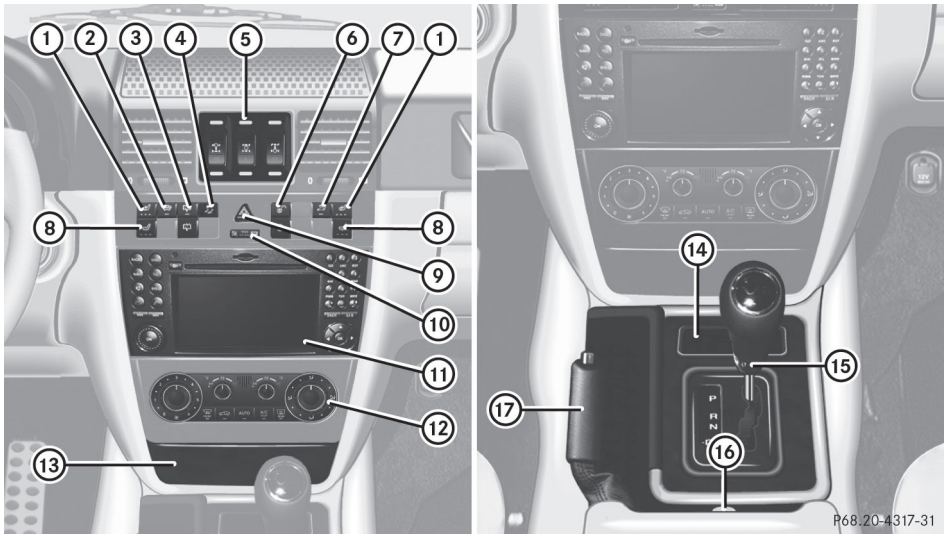

	Function	Page
①	Seat heating	80
②	Windshield heating	108
③	Rear window wiper	100
④	ESP® OFF	55
⑤	Engages the differential locks	148
⑥	Locks/unlocks centrally	65
⑦	Anti-theft alarm system (ATA) Tow-away alarm	58 58
⑧	Seat ventilation	81
⑨	Hazard warning lamps	91
⑩	PASSENGER AIR BAG OFF indicator lamp	37

	Function	Page
⑪	COMAND; see separate operating instructions	
⑫	Dual-zone automatic climate control	105
⑬	Ashtray Cigarette lighter	195 195
⑭	Stowage tray	
⑮	Automatic transmission selector lever	120
⑯	Transfer case switch	145
⑰	Parking brake	128

Overhead control panel

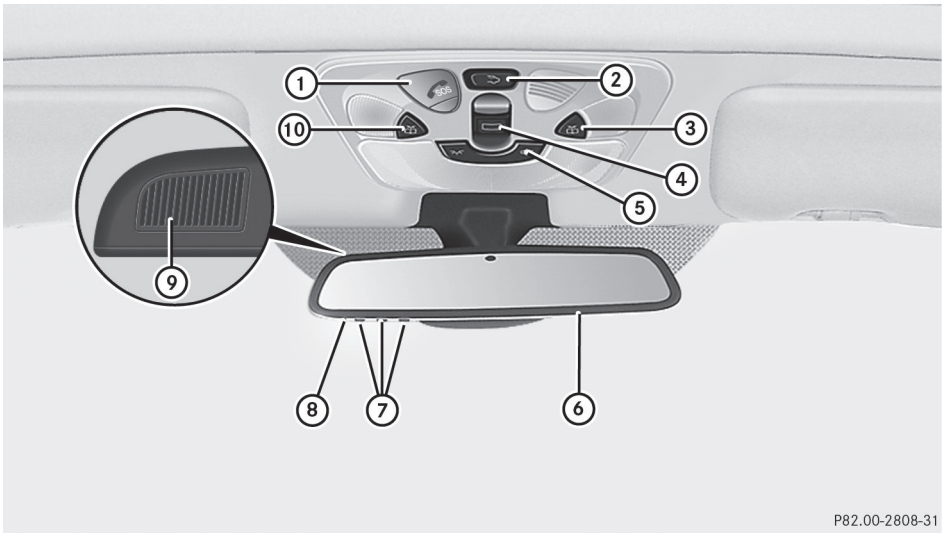

	Function	Page
①	SOS button (mbrace system: the emergency call system is called TELEAID in Canada.)	199
②	Switches the cargo compartment lamp/rear interior lighting on/off	93
③	Switches the right-hand reading lamp on/off	93
④	Opens/closes the sliding sunroof	70
⑤	Switch (controls the interior lighting)	92
⑥	Rear-view mirror	84

	Function	Page
⑦	Transmitter buttons for the garage door opener	204
⑧	Indicator lamp for the garage door opener	204
⑨	Microphone for mbrace (the emergency call system is called TELEAID in Canada), telephone and Voice Control System (see the separate operating instructions)	
⑩	Switches the left-hand reading lamp on/off	93

Door control panel

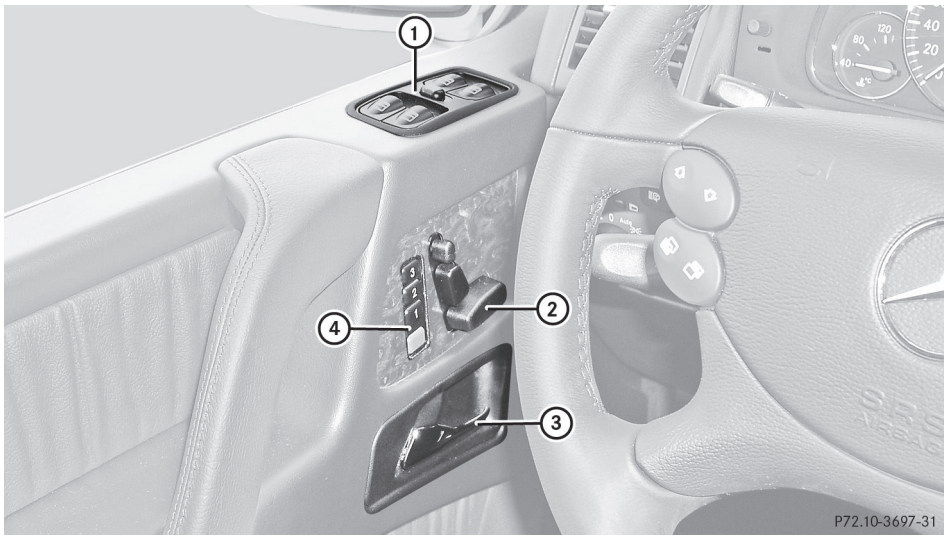

	Function	Page
①	Opens/closes the side windows	68
	Activates/deactivates the override feature for the side windows in the rear compartment	52
②	Adjusts the seat electrically	76
③	Opens the door	65
④	Stores settings for the seat, exterior mirrors and steering wheel	85

Useful information 32
Occupant safety 32
Children in the vehicle 47
Panic alarm 52
Driving safety systems 53
Theft deterrent locking systems 57

Useful information

ℹ This Operator's Manual describes all models and all standard and optional equipment of your vehicle available at the time of publication of the Operator's Manual. Country-specific differences are possible. Please note that your vehicle may not be equipped with all features described. This also applies to safety-related systems and functions.

ℹ Please read the information on qualified specialist workshops (▷ page 20).

Occupant safety

Overview of occupant safety

In this section you will learn the most important facts about the restraint system components of the vehicle.

The restraint system consists of:

- seat belts
- child restraint systems
- LATCH-type (ISOFIX) child seat securing system

Additional protection is provided by:

- SRS (Supplemental Restraint System)
- NECK-PRO head restraints
- air bag system components with:
  - PASS AIR BAG OFF indicator lamp
  - front-passenger seat with BabySmart™ automatic child recognition

The different air bag systems work independently of each other. The protective functions of the system work in conjunction with each other. Not all air bags are deployed in an accident.

⚠ **WARNING**

Modifications to or work improperly conducted on restraint system components or their wiring, as well as tampering with interconnected electronic systems, can lead to the restraint systems no longer functioning as intended.

Air bags or Emergency Tensioning Devices (ETDs), for example, could deploy inadvertently or fail to deploy in accidents although the deceleration threshold for air bag deployment is exceeded. Therefore, never modify the restraint systems. Do not tamper with electronic components or their software.

ℹ See "Children in the vehicle" (▷ page 47) for further information on infants and children traveling in the vehicle as well as on child restraint systems.

SRS (Supplemental Restraint System)

Introduction

SRS reduces the risk of occupants coming into contact with the vehicle's interior in the event of an accident. It can also reduce the effect of the forces to which occupants are subjected during an accident.

SRS consists of:

- the SRS SRS warning lamp
- air bags
- air bag control unit (with crash sensors)
- Emergency Tensioning Devices
- seat belt force limiters

SRS warning lamp

SRS functions are checked regularly when you switch on the ignition and when the engine is running. Therefore, malfunctions can be detected in good time.

The SRS SRS warning lamp in the instrument cluster lights up when the ignition is switched on. It goes out no later than a few seconds after the engine is started.

⚠ **WARNING**

The SRS self-check has detected a malfunction if the SRS indicator lamp:

- does not light up at all
- does not go out after approximately four seconds after the engine is started
- lights up after the engine is started or while the vehicle is in motion

For your safety, Mercedes-Benz strongly recommends that you have the system checked as soon as possible at a qualified specialist workshop. SRS may otherwise fail to activate when it is needed in the event of an accident, which could lead to serious or fatal injuries. SRS might also be activated unexpectedly and unnecessarily, which could also result in injury.

In addition, work carried out improperly on SRS may render SRS inoperative or cause unintended air bag deployment. Work on the SRS system should only be carried out by qualified specialist personnel. Consult a qualified specialist workshop.

If it is necessary to modify an air bag system to accommodate a person with disabilities, contact an authorized Mercedes-Benz Center for details. USA only: for further information, contact our Customer Assistance Center at 1-800-FOR-MERCedes (1-800-367-6372).

Safety guidelines for seat belts, Emergency Tensioning Devices (ETDs) and air bags

⚠ **WARNING**

- Damaged seat belts or seat belts that have been subjected to stress in an accident must be replaced. Their anchoring points must also be checked. Only use seat belts installed or supplied by an authorized Mercedes-Benz Center.
- Air bags and pyrotechnic Emergency Tensioning Devices (ETDs) contain perchlorate material, which may require special handling and regard for the environment. Check your national disposal guidelines. California residents, see **www.dtsc.ca.gov/HazardousWaste/Perchlorate/index.cfm**.
- Air bags and ETDs are designed to function on a one-time-only basis. An air bag or ETD that has deployed must be replaced.
- Do not pass seat belts over sharp edges. They could tear.
- Do not make any modification that could change the effectiveness of the seat belts.
- Do not bleach or dye seat belts as this may severely weaken them. In a crash they may not be able to provide adequate protection.
- No modifications of any kind may be made to any components or wiring of the SRS.
- Do not change or remove any component or part of the SRS.
- Do not install additional trim material, seat covers, badges, etc. over the steering wheel hub, front-passenger front air bag cover, outer sides of the seat backrests, door trim panels, or door frame trims.
- Do not install additional electrical/electronic equipment on or near SRS components and wiring.
- Keep area between air bags and occupants free of objects (e.g. packages, purses, umbrellas, etc.).
- Do not hang items such as coat hangers from the coat hooks or handles over the door. These items may be thrown around in the vehicle and cause head and other injuries when the window curtain air bag is deployed.
- Air bag system components will be hot after an air bag has inflated. Do not touch them.
- Never place your feet on the instrument panel, dashboard, or on the seat. Always keep both feet on the floor in front of the seat.
- Improper repair work on the SRS creates a risk of rendering the SRS inoperative or causing unintended air bag deployment. Work on the SRS must therefore only be

▷▷

performed by qualified technicians. Contact an authorized Mercedes-Benz Center.

- For your protection and the protection of others, when scrapping the air bag unit or ETD, our safety instructions must be followed. These instructions are available from any authorized Mercedes-Benz Center.
- Given the considerable deployment speed, required inflation volume, and the material of the air bags, there is the possibility of abrasions or other, potentially more serious injuries resulting from air bag deployment.

If you sell your vehicle, Mercedes-Benz strongly recommends that you inform the subsequent owner that the vehicle is equipped with SRS. Also, refer them to the applicable section in the Operator's Manual.

Air bags

Important safety notes

⚠ **WARNING**

Air bags are designed to reduce the potential of injury and fatality in certain

- frontal impacts (front air bags)
- side impacts (window curtain air bags)

However, no system available today can completely eliminate injuries and fatalities.

Deployment of the air bags temporarily releases a small amount of dust from the air bags. This dust, however, is neither harmful to your health, nor does it indicate a fire in the vehicle. The dust might cause some temporary breathing difficulty for people with asthma or other breathing trouble. To avoid this, you may wish to get out of the vehicle as soon as it is safe to do so. If you have any breathing difficulty but cannot get out of the vehicle after the air bag inflates, then get fresh air by opening a window or door.

⚠ **WARNING**

To reduce the risk of injury when the front air bags inflate, it is very important for the driver and front passenger to always be in a properly seated position and to wear their respective seat belt.

For maximum protection in the event of a collision always be in normal seated position with your back against the seat backrest. Fasten your seat belt and make sure it is properly positioned on your body.

Since the air bag inflates with considerable speed and force, a proper seating position and correct positioning of the hands on the steering wheel will help to keep you at a safe distance from the air bag. Occupants who are not wearing their seat belt, are not seated properly or are too close to the air bag can be seriously injured or killed by an air bag as it inflates with great force instantaneously:

- Sit with the seat belt properly fastened in a position that is as upright as possible with your back against the seat backrest.
- Move the driver's seat as far back as possible, still permitting proper operation of vehicle controls. The distance from the center of the driver's chest to the center of the air bag cover on the steering wheel must be at least 10 inches (25 cm) or more. You should be able to accomplish this by adjusting the seat and steering wheel. If you have any difficulties, please contact an authorized Mercedes-Benz Center.
- Do not lean your head or chest close to the steering wheel or dashboard.
- Keep hands on the outside of the steering wheel rim. Placing hands and arms inside the rim can increase the risk and potential severity of hand/arm injury when the driver front air bag inflates.
- Adjust the front passenger seat as far as possible rearward from the dashboard when the seat is occupied.
- Occupants, especially children, should never place their bodies or lean their heads

in the area of the door where the window curtain air bag inflates. This could result in serious injuries or death should the window curtain air bag be deployed. Always sit as upright as possible, wear the seat belt properly and use an appropriately sized infant restraint, toddler restraint, or booster seat recommended for the size and weight of the child.

- Children 12 years old and under must never ride in the front seat, except in a Mercedes-Benz authorized BabySmart™ compatible child seat, which operates with the BabySmart™ air bag deactivation system installed in the vehicle to deactivate the front passenger front air bag when it is installed properly. Otherwise they will be struck by the air bag when it inflates in a crash. If this happens, serious or fatal injury will result.

Failure to follow these instructions can result in severe injuries to you or other occupants.

If you sell your vehicle, it is important that you make the buyer aware of this safety information. Be sure to give the buyer this Operator's Manual.

⚠ **WARNING**

Accident research shows that the safest place for children in an automobile is in a rear seat. Should you choose to place a child 12 years old or under in the front passenger seat of your vehicle, you must properly use a BabySmart™ child restraint which will turn off the front passenger front air bag.

To help avoid the possibility of injury, please follow these guidelines:

(1) Always sit as upright as possible, wear the seat belt properly, and for children 12 years old and under, use an appropriately sized infant restraint, toddler restraint, or booster seat recommended for the size and weight of the child.

(2) Always wear seat belts properly.

The air bags are only deployed if the air bag control unit detects the need for deployment. Only in the event of such a situation will they provide their supplemental protection.

The driver and passenger should always wear their seat belts. Otherwise, it is not possible for the air bags to provide their supplemental protection.

In the event of other types of impacts and impacts below air bag deployment thresholds, the air bags will not deploy. The driver and passengers will then be protected to the extent possible by a properly fastened seat belt. A properly fastened seat belt is also needed to provide the best possible protection in a rollover.

Air bags provide additional protection; they are not, however, a substitute for seat belts. All vehicle occupants must fasten their seat belts regardless of whether your vehicle is equipped with air bags or not.

It is important for your safety and that of your passenger to have deployed air bags replaced and to have any malfunctioning air bags repaired. This will help to make sure the air bags continue to perform their protective function for the vehicle occupants in the event of a crash.

Front air bags

⚠ **WARNING**

Observe "Important safety notes" (▷ page 34).

The front air bags increase protection for the driver's and the front-passenger's head, neck and chest.

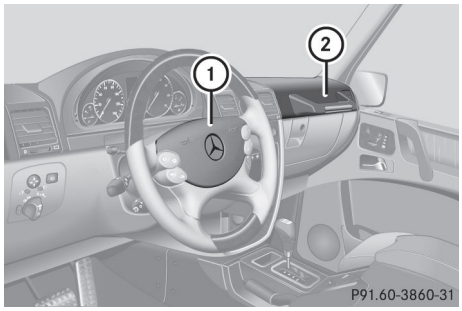

Driver's air bag ① deploys in front of the steering wheel; front-passenger front air bag ② deploys in front of and above the glove box.

They are deployed:

- in the event of certain frontal impacts
- if the system determines that air bag deployment can offer additional protection to that provided by the seat belt
- depending on whether the seat belt is being used
- independently of other air bags in the vehicle

If the vehicle overturns, the front air bags are generally not deployed unless the system detects high vehicle deceleration in a longitudinal direction.

Your vehicle has an adaptive, two-stage driver's air bag. In the event of a collision, the air bag control unit evaluates the vehicle deceleration. When the first deployment threshold is reached, the front air bag is filled with enough propellant gas to reduce the risk of injuries. The front air bag is fully deployed if a second deployment threshold is exceeded within a few milliseconds.

The front air bags will not deploy in impacts with vehicle deceleration or acceleration rates which do not exceed the system's preset deployment thresholds for vehicle deceleration or acceleration. You will then be protected by the fastened seat belt.

The front-passenger front air bag will only deploy if:

- the front-passenger seat is occupied.
- the PASS AIR BAG OFF indicator lamp in the center console is not lit (▷ page 37).
- the impact exceeds a preset deployment threshold.

The front-passenger air bag is automatically activated and deactivated. Both driver and passenger should always check whether the front-passenger air bag is activated or deactivated.

The deployment of the driver's air bag does not mean that the front-passenger air bag will also deploy. If the system recognizes that the front-passenger seat is empty, the front-passenger air bag does not deploy even if the impact fulfills the criteria and the driver's air bag has deployed.

If the front-passenger seat is recognized as occupied, the PASS AIR BAG OFF indicator lamp lights up for approximately six seconds if

- you turn the SmartKey to position **1** or **2** in the ignition lock.
- the engine is running and then you switch it off.

This indicates the operational readiness of the front-passenger air bag.

Note that objects placed on the front-passenger seat may cause the system to recognize the seat as occupied. This can result in the deployment of the front-passenger air bag if the impact fulfills the specified criteria. If the PASS AIR BAG OFF indicator lamp is lit up, the front-passenger air bag is deactivated and will not deploy should the situation arise. If indicator lamp PASS AIR BAG OFF is not lit up, the front-passenger air bag is activated and will deploy should the situation arise.

⚠ **WARNING**

Your vehicle is equipped with air bag technology which disables the front-

passenger air bag if the system recognizes that the front-passenger seat is empty .

If the front-passenger seat is occupied by an adult or young person and the indicator lamp is lit up, the front-passenger air bag is disabled. If the front-passenger seat is recognized as empty, the air bag control unit will not deploy the front-passenger air bag in the event of a collision.

Ask your passenger to sit correctly on the front-passenger seat in an upright position until the indicator lamp goes out. If the indicator lamp does not go out, please consult an authorized Mercedes-Benz Center.

Window curtain air bags

WARNING

Observe "Important safety notes" (▷ page 34).

The window curtain air bags enhance the level of protection for the head (but not chest or arms) of the vehicle occupants on the side of the vehicle on which the impact occurs.

The window curtain air bags are integrated into the side of the roof frame and deploy in the area extending from the front door (A-pillar) to the rear door (C-pillar).

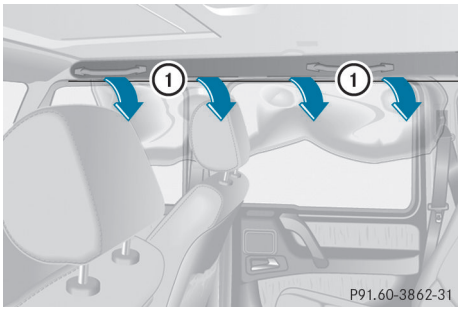

Window curtain air bags ① are deployed:

- on the side on which an impact occurs
- at the start of an accident with a high rate of lateral vehicle deceleration or acceleration, e.g. in a side impact
- regardless of whether the front-passenger seat is occupied
- independently of seat belt use
- if the vehicle overturns and the system determines that window curtain air bag deployment can offer additional protection to that provided by the seat belt
- independently of the front air bags

Window curtain air bags ① will not deploy in impacts with deceleration rates which do not exceed the system's preset deployment thresholds for vehicle deceleration or acceleration. You will then be protected by the fastened seat belt.

BabySmart™ air bag deactivation system

How the air bag deactivation system works

Your vehicle is equipped with a BabySmart™ system.

WARNING

According to accident statistics, children are safer when properly restrained in the rear seating positions than in the front seating position. Thus, we strongly recommend that children be placed in the rear seats whenever possible. Regardless of seating position, children 12 years old and under must be seated and properly secured in an appropriate infant restraint, toddler restraint, or booster seat recommended for the size and weight of the child.

The infant or child restraint must be properly secured with the vehicle's seat belt, the seat belt and top tether strap, or lower anchors and top tether strap, fully in accordance with the child seat manufacturer's instructions.

Occupants, especially children, should always sit as upright as possible, wear the seat belt properly and use an appropriately sized infant restraint, toddler restraint, or booster seat

▷▷

recommended for the size and weight of the child.

Children can be killed or seriously injured by an inflating air bag. Note the following important information when circumstances require you to place a child in the front passenger seat:

- Children 12 years old and under must never ride in the front seat, except in a Mercedes-Benz authorized BabySmart™ compatible child seat, which operates with the BabySmart™ system installed in the vehicle to deactivate the front passenger front air bag when it is installed properly. Otherwise they will be struck by the air bag when it inflates in a crash. If this happens, serious or fatal injury will result.
- A child in a rear-facing child restraint on the front passenger seat will be seriously injured or even killed if the front passenger front air bag inflates in a collision which could occur under some circumstances, even with the air bag technology installed in your vehicle. The only means to completely eliminate this risk is to never place a child in a rear-facing child restraint in the front seat. We therefore strongly recommend that you always place a child in a rear-facing child restraint in a backseat.
- If you must install a BabySmart™ compatible rear-facing child restraint on the front passenger seat because circumstances require you to do so, make sure the [ ] [PASS AIR BAG OFF] indicator lamp is illuminated, indicating that the front passenger front air bag is deactivated. Should the [ ] [PASS AIR BAG OFF] indicator lamp not illuminate or go out while the restraint is installed, please check installation. Periodically check the [ ] [PASS AIR BAG OFF] indicator lamp while driving to make sure the [ ] [PASS AIR BAG OFF] indicator lamp is illuminated. If the [ ] [PASS AIR BAG OFF] indicator lamp goes out or remains out, do not transport a child on the front passenger seat until the system has been repaired.

  A child in a rear-facing child restraint on the front passenger seat will be seriously injured or even killed if the front passenger front air bag inflates.
- If you have to place a child in a forward-facing child restraint on the front passenger seat, move the seat as far back as possible, use the proper child restraint recommended for the age, size and weight of the child, and secure child restraint with the vehicle's seat belt according to the child seat manufacturer's instructions.

⚠ WARNING

When using a BabySmart™ compatible child seat on the front passenger seat, the front passenger front air bag will not deploy only if the [ ] [PASS AIR BAG OFF] indicator lamp remains illuminated.

Please be sure to check the [ ] [PASS AIR BAG OFF] indicator lamp every time you use a BabySmart™ compatible child seat on the front passenger seat. Should the [ ] [PASS AIR BAG OFF] indicator lamp go out while the restraint is installed, please check installation. If the [ ] [PASS AIR BAG OFF] indicator lamp remains out, do not use the BabySmart™ restraint to transport a child on the front passenger seat until the system has been repaired.

⚠ WARNING

The BabySmart™ air bag disabling system ONLY works with specially adapted child restraint systems. It does not work with child restraint systems that are not compatible with BabySmart™.

Never place anything between the seat cushion and the child restraint system (e.g. a cushion), as this reduces the effectiveness of the BabySmart™ air bag deactivation system. The underside of the child restraint system must lie against the seat cushion of the front-passenger seat. In the event of an accident, an incorrectly installed child restraint system could injure the child instead of offering protection.

Observe the manufacturer's instructions when installing special child restraint systems.

Special child restraint systems which are compatible with BabySmart™ are necessary for deactivating the front-passenger air bag. When the special BabySmart™-compatible child restraint system is installed correctly and is recognized by the sensor system in the front-passenger seat, the front-passenger air bag is deactivated. In this case, PASS AIR BAG OFF indicator lamp ① lights up. If you have any questions regarding the special BabySmart™-compatible child restraint systems, consult an authorized Mercedes-Benz Center.

If the SmartKey has been removed from the ignition lock or is in position **0**, PASS AIR BAG OFF indicator lamp ① does not light up.

The system does not deactivate:

- the window curtain air bag
- the Emergency Tensioning Devices

System self-test

The PASS AIR BAG OFF indicator lamp lights up when the SmartKey is turned to position **1** or **2** in the ignition lock.

The PASS AIR BAG OFF indicator lamp goes out after approximately six seconds.

If the PASS AIR BAG OFF indicator lamp does not light up or is always lit, then the system is malfunctioning. Have the BabySmart™ system checked at an authorized Mercedes-Benz Center before transporting a child on the front-passenger seat.

For further information, see "Problems with air bag deactivation system" (▷ page 40).

⚠ **WARNING**

Do not leave any switched on notebooks, mobile phones, electronic tags (e.g. a ski pass) or similar electronic devices on the front-passenger seat. Signals emitted from such devices can interfere with the BabySmart™ air bag deactivation system. Such interference can lead to the PASS AIR BAG OFF indicator lamp not lighting up during the self-test.

If the SRS SRS warning lamp and the PASS AIR BAG OFF indicator lamp light up simultaneously in the instrument cluster, the system is malfunctioning. The front-passenger air bag could deploy without cause, or may fail to deploy in the event of an accident.

Have the system checked as soon as possible at an authorized Mercedes-Benz Center.

Problems with the air bag deactivation system

Problem	Possible causes/consequences and ▶ Solutions
The [ ] [PASS AIR BAG OFF] indicator lamp is on continuously.	A special BabySmart™-compatible child restraint system is mounted on the front-passenger seat. The front-passenger air bag is therefore disabled.
	There is no BabySmart™-compatible child restraint system mounted on the front-passenger seat. The BabySmart™ system is malfunctioning. ▶ Have the BabySmart™ system checked as soon as possible at an authorized Mercedes-Benz Center.

⚠ **WARNING**

If the [ ] [PASS AIR BAG OFF] indicator lamp illuminates and remains illuminated when the weight of a typical adult or someone larger than a small individual has been detected on the passenger seat, do not allow any occupant to use the passenger seat until the system has been repaired.

Problem	Possible causes/consequences and ▶ Solutions
The [ ] [PASS AIR BAG OFF] indicator lamp does not light up and/or stay on when a BabySmart™-compatible child restraint system is installed on the front-passenger seat.	The BabySmart™ system is malfunctioning. ▶ Make sure there is nothing between the seat cushion and the child restraint system. ▶ Check that the child restraint system is installed correctly. ▶ If the [ ] [PASS AIR BAG OFF] indicator lamp does not light up, have the BabySmart™ system checked as soon as possible at an authorized Mercedes-Benz Center. Do not transport a child on the front-passenger seat until the air bag deactivation system has been repaired.

NECK-PRO head restraints

Important safety notes

The NECK-PRO head restraints increase protection to the driver's and the front passenger's head and neck. The NECK-PRO head restraints on the driver's and front-passenger seats are moved forwards and upwards in the event of a rear-end collision of a certain severity. This provides better head support.

⚠ **WARNING**

Do not secure any objects (e.g. coat hangers) on the NECK-PRO head restraints. Otherwise, the NECK-PRO head restraints may not function properly, or in the event of a rear-end collision may not be able offer the level of protection they are designed to provide.

⚠ **WARNING**

Head restraint covers prevent the NECK-PRO head restraints from triggering correctly. Consequently, the NECK-PRO head restraints cannot provide the intended level of protection. Do not use head restraint covers.

If the NECK-PRO head restraints have been triggered in an accident, reset the NECK-PRO head restraints on the driver's and front-passenger seat (▷ page 41). Otherwise, the additional protection will not be available in the event of another rear-end collision. You can recognize if NECK-PRO head restraints have been triggered by the fact that they have moved forwards and can no longer be adjusted.

⚠ **WARNING**

For your protection, drive only with properly positioned head restraints.

Adjust the head restraint so that it is as close to the head as possible and the center of the head restraint supports the back of the head at eye level. This will reduce the potential for injury to the head and neck in the event of an accident or similar situation.

Resetting triggered NECK-PRO head restraints

⚠ **WARNING**

For safety reasons, have the NECK-PRO head restraints checked at a qualified specialist workshop after a rear-end collision.

⚠ **WARNING**

When pushing back the NECK-PRO head restraint cushion, make sure your fingers do not become caught between the head restraint cushion and the cover. Failure to observe this could result in injuries.

ℹ Resetting the NECK-PRO head restraints requires a lot of strength. If you have difficulty resetting the NECK-PRO head restraints, have this work carried out at a qualified specialist workshop.

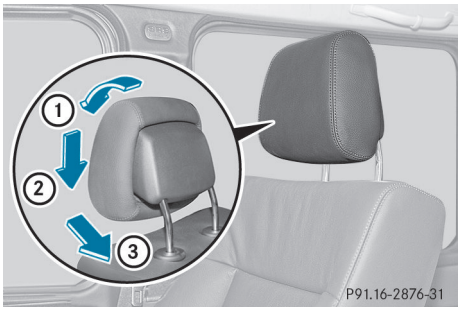

- ▶ Tilt the top of the NECK-PRO head restraint cushion forwards in the direction of arrow ①.
- ▶ Push the NECK-PRO head restraint cushion down in the direction of arrow ② as far as it will go.
- ▶ Firmly push the NECK-PRO head restraint cushion back in the direction of arrow ③ until the cushion engages.
- ▶ Repeat this procedure for the second NECK-PRO head restraint.

Seat belts

Important safety notes

⚠ **WARNING**

Always fasten your seat belt before driving off. Always make sure all of your passengers are properly restrained. You and your passengers should always wear seat belts.

Failure to wear and properly fasten and position your seat belt greatly increases your risk of injuries and their likely severity in an accident.

If you are ever in an accident, your injuries can be considerably more severe without your seat belt properly buckled. Without your seat belt buckled, you are much more likely to hit the interior of the vehicle or be ejected from it. You can be seriously injured or killed.

In the same crash, the possibility of injury or death is lessened if you are properly wearing your seat belt. The air bags can only protect

▷▷

as intended if the occupants are properly wearing their seat belts.

⚠ **WARNING**

Never ride in a moving vehicle with the seat backrest in an excessively reclined position as this can be dangerous. You could slide under the seat belt in a collision. If you slide under it, the seat belt would apply force at the abdomen or neck. That could cause serious or even fatal injuries. The seat backrest and seat belt provide the best restraint when the wearer is in a position that is as upright as possible and the seat belt is properly positioned on the body.

⚠ **WARNING**

Never let more people ride in the vehicle than there are seat belts available. Make sure everyone riding in the vehicle is correctly restrained with a separate seat belt. Never use a seat belt for more than one person at a time.

⚠ **WARNING**

Always have damaged seat belts or seat belts that have been subjected to a load in an accident replaced and the anchorages checked.

Only use seat belts that have been approved by Mercedes-Benz.

Never tamper with seat belts. This can result in the unintended deployment of the Emergency Tensioning Devices or the failure to deploy when necessary.

Do not bleach or dye seat belts, as this may severely weaken them. In the event of a collision, they may be unable to provide adequate protection.

Have all work carried out only by qualified technicians. Consult a qualified specialist workshop.

The use of seat belts and infant and child restraint systems is required by law in all 50 states, the District of Columbia, the U.S. territories and all Canadian provinces.

Even where this is not the case, all vehicle occupants should have their seat belts fastened when the vehicle is in motion.

ℹ See “Children in the vehicle” for more information about traveling with infants and children and about infant and child restraint systems (▷ page 47).

Proper use of the seat belts

⚠ **WARNING**

CORRECT USE OF SEAT BELTS

- Seat belts only work properly if they are fastened correctly. Never wear seat belts in any other way than as described in this section, as that could result in serious injuries in the event of an accident.
- All occupants should wear their seat belt at all times, because seat belts help reduce the likelihood of and potential severity of injuries in accidents, even if the vehicle overturns. The restraint system installed is equipped with SRS (driver's air bag, front-passenger air bag, window curtain air bags), belt tensioners and belt force limiters.

  The system is designed to enhance the protection offered to occupants who are wearing their seat belts correctly, in certain frontal impacts (front air bags and belt tensioners) and side impacts (window curtain air bags and belt tensioners) which exceed preset deployment thresholds.
- Never route the shoulder section of the seat belt under your arm, across your neck or anywhere other than across your shoulder. In the event of a frontal impact, your body would be moved too far forward. This would increase the risk of head and neck injuries. The seat belt would then apply excessive force to the ribs or abdomen which could cause severe internal injuries to organs such as the liver or spleen.

Adjust the seat belt so that the upper part of the belt is as close as possible to the center of the shoulder. It should not touch the neck. Never route the belt under the shoulder. The height of the belt outlet can be altered to ensure correct usage.

- The lap belt should be routed as low as possible across the hips, not across the abdomen. If the lap belt is routed across the abdomen, it could cause serious injuries in the event of an impact.
- Never route the seat belt over rigid or fragile objects in or on your clothing, such as eyeglasses, pens, keys etc, as this could cause injuries.
- Always ensure that the seat belt is routed correctly. This is particularly important if you are wearing loose clothing.
- Only one person should use each seat belt at any one time. Never use a seat belt to restrain more than one person or route the belt around additional objects.
- Never wear seat belts when they are twisted. Otherwise, in the event of an impact, the full width of the seat belt is unavailable to distribute the force of the impact. The twisted seat belt routed across your body could cause injuries.
- Pregnant women should also wear a three-point seat belt. The lap belt must always pass across your lap as low down as possible, i.e. across your hips; not across your abdomen.
- The seat backrest should be set as close to vertical as possible.
- Check the seat belt during the journey in order to make sure that it is correctly positioned.
- Never rest your feet on the dashboard or the seat. Always keep both feet on the floor in front of the seat.
- When using a seat belt to secure an infant restraint system, child restraint system or a child on a booster seat, always follow the child seat manufacturer's instructions.

⚠ **WARNING**

Do not pass seat belts over sharp edges. They could tear.

Do not allow the seat belt to get caught in the door or in the seat adjustment mechanism. This could damage the seat belt.

Never attempt to make modifications to seat belts. This could impair the effectiveness of the seat belts.

Fastening seat belts

Important safety notes

⚠ **WARNING**

According to accident statistics, children are safer when properly restrained on the rear seats than on the front-passenger seat. Thus, we strongly recommend that children be placed in the rear seat whenever possible. Regardless of seating position, children 12 years old and under must be seated and properly secured in an appropriately sized child restraint system or booster seat recommended for the size and weight of the child. For additional information, see the "Children in the vehicle" section.

A child's risk of serious or fatal injuries is significantly increased if the child restraints are not properly secured in the vehicle and/or the child is not properly secured in the child restraint.

⚠ **WARNING**

Children 12 years old and under must never ride in the front seat, except in a Mercedes-Benz authorized BabySmart™ compatible child seat, which operates with the BabySmart™ system installed in the vehicle to deactivate the front passenger front air bag when it is installed properly. Otherwise they will be struck by the air bag when it inflates in a crash. If this happens, serious or fatal injury will result.

Three-point seat belt, front

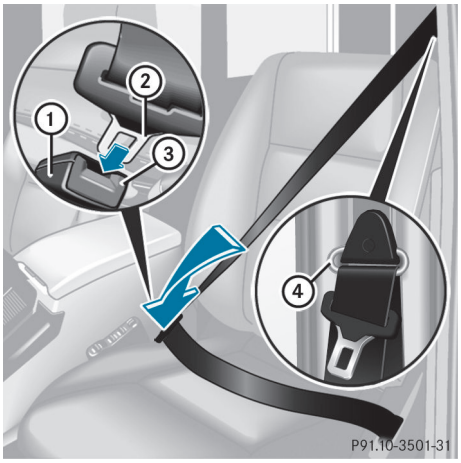

- ▶ Adjust the seat and move the backrest to an almost vertical position (▷ page 74).
- ▶ Pull the seat belt smoothly through belt sash guide ④.
- ▶ Without twisting it, guide the shoulder section of the seat belt across the middle of your shoulder and the lap section across your hips.
- ▶ Engage belt tongue ② in buckle ①.
- ▶ If necessary, adjust the seat belt to the appropriate height (▷ page 45).
- ▶ If necessary, pull upwards on the shoulder section of the seat belt to tighten the belt across your body.

For more information about releasing the seat belt with release button ③, see "Releasing seat belts" (▷ page 46).

Three-point seat belt in the rear, center

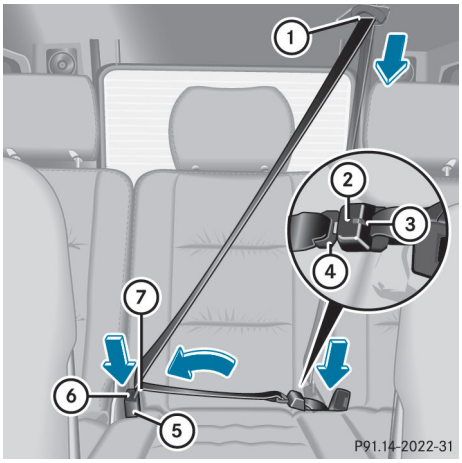

① Bracket for seat belt tongues
② Belt buckle for fixed belt tongue
③ Release button for fixed belt tongue
④ Fixed belt tongue
⑤ Belt buckle for moveable belt tongue
⑥ Release button for moveable belt tongue
⑦ Moveable belt tongue

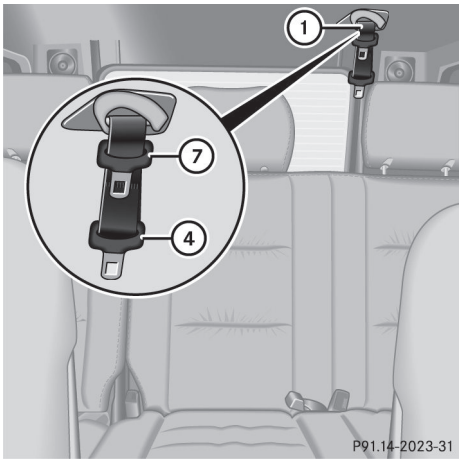

- ▶ Pull both seat belt tongues ④ and ⑦ from bracket ①.

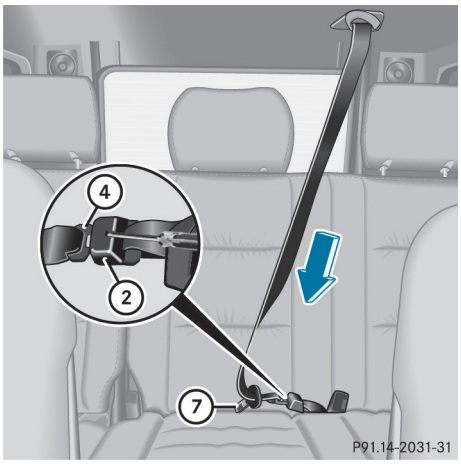

- Pull the seat belt smoothly from the inertia reel.
- Engage fixed seat belt tongue ④ in buckle ②.

- Pull movable seat belt tongue ⑦ and route the seat belt across your body. Without twisting it, guide the shoulder section of the seat belt across the middle of your shoulder and the lap section across your hips.
- Engage movable seat belt tongue ⑦ in buckle ⑤.
- If necessary, pull upwards on the shoulder section of the seat belt to tighten the belt across your body.

For more information about releasing the seat belt with release buttons ⑥ and ③, see "Releasing seat belts" (▷ page 46).

Special seat belt retractor

All seat belts in the vehicle with the exception of the driver's are equipped with a special seat belt retractor, to which a child restraint system can be secured. For further information on special seat belt retractors, see (▷ page 49).

Belt height adjustment

You can adjust the belt height on the driver's and front-passenger seat, as well as on the outer rear seats.

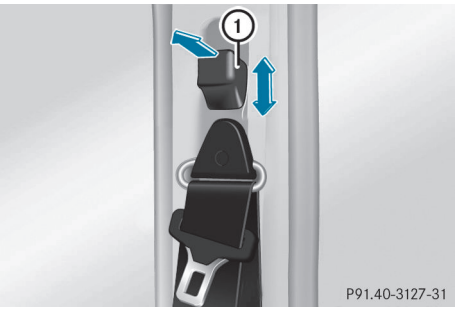

Adjust the height so that the upper part of the seat belt is routed across the center of your shoulder.

- **To raise:** slide the belt sash guide upwards. The belt sash guide engages in various positions.
- **To lower:** pull belt sash guide release ① forwards and hold it.
- Slide the belt sash guide downwards.
- Release belt sash guide release ① and make sure that the belt sash guide has engaged.

Releasing seat belts

Notes

! Make sure that the seat belt is fully rolled up. Otherwise, the seat belt or belt tongue will be trapped in the door or in the seat mechanism. This could damage the door, the door trim panel and the seat belt. Damaged seat belts can no longer fulfill their protective function and must be replaced. Consult an authorized Mercedes-Benz Center.

Three-point seat belt, front

▶ Press release button ③ and guide belt tongue ② back towards belt sash guide ④ (▷ page 44).

Three-point seat belt in the rear, center

▶ Press release button ⑥ on seat belt buckle ⑤(▷ page 44).

▶ Open belt buckle ② with a screwdriver or similar item (▷ page 44).

▶ Let the seat belt roll up to the stop.

▶ Guide both seat belt tongues ④ and ⑦ into bracket ①, one on top of the other. (▷ page 44).

⚠ **WARNING**

To help prevent the possibility of injury, always store the rear center seat belt latch plates in the attachment when the rear center seat belt is not in use.

Belt warning for the driver and front passenger

The [ ] seat belt warning lamp in the instrument cluster is a reminder for all occupants to fasten their seat belts. Regardless of whether the driver and front-passenger seat belts have already been fastened, the [ ] seat belt warning lamp will always illuminate for six seconds each time the engine is started. It then goes out if the driver and the front passenger have fastened their seat belts.

If the driver or front-passenger seat belt is not fastened when the engine is started, an additional warning tone will sound. This warning tone ceases after a maximum of six seconds or when the driver and front passenger have fastened their seat belts.

If after six seconds, the driver or front passenger have not fastened their seat belts and the doors are closed:

- the [ ] seat belt warning lamp remains illuminated as long as either the driver's or front-passenger seat belt is not fastened.
- the [ ] seat belt warning lamp lights up if the vehicle speed exceeds 15 mph (25 km/h). Additionally, a warning tone will sound with increasing intensity for a maximum of 60 seconds or until the driver's or front-passenger seat belt are fastened.

If the driver or front passenger unfasten their seat belt while the vehicle is in motion, the [ ] seat belt warning lamp lights up and a warning tone sounds again.

The warning tone ceases even if the driver or front passenger have still not fastened their seat belt after 60 seconds. The [ ] seat belt warning lamp stops flashing but remains illuminated.

After the vehicle comes to a standstill, the warning tone is reactivated and the [ ] seat belt warning lamp flashes again if the vehicle speed again exceeds 15 mph (25 km/h) .

The [ ] seat belt warning lamp only goes out if:

- both the driver and the front passenger have fastened their seat belts.

or

- the vehicle is stationary and a door is open.

ℹ For more information on the [ ] seat belt warning lamp, see "Indicator and warning lamps in the instrument cluster, seat belt" (▷ page 178).

Emergency Tensioning Devices, belt force limiters

The front seat belts and the outer seat belts in the rear are equipped with ETDs and seat belt force limiters.

The ETDs tighten the seat belts in an accident, pulling them close against the body.

The ETDs do not correct incorrect seat positions or incorrectly fastened seat belts.

The ETDs do not pull vehicle occupants back towards the backrest.

Seat belt force limiters, when triggered, help to reduce the peak force exerted by the seat belt on the vehicle occupant.

The front belt force limiters are synchronized with the front air bags, which take on a part of the deceleration force. Thus, the force exerted on the occupant is distributed over a greater area.

The ETDs can only be activated when:

- the SmartKey is in position **1** or **2** in the ignition lock.
- the restraint systems are operational; see "SRS warning lamp" (▷ page 32).
- the belt tongue is engaged in the buckle on each of the lap-shoulder belts in the front.
- the front-passenger seat is occupied and the belt tongue is engaged in the buckle on the front-passenger side

The ETDs are triggered depending on the type and severity of an accident:

- in the event of a head-on or rear-end collision if the vehicle decelerates or accelerates rapidly in a longitudinal direction during the initial stages of the impact
- in certain situations if the vehicle overturns and the system determines that it can provide additional protection

If the Emergency Tensioning Devices (ETDs) are triggered, you will hear a bang, and a small amount of smoke may also be released. Only in rare cases will the bang affect your hearing. The smoke that is released generally does not constitute a health hazard. The SRS SRS warning lamp lights up.

⚠ **WARNING**

Pyrotechnic ETDs that were activated must be replaced.

For your safety, when disposing of the pyrotechnic ETDs always follow our safety instructions. These are available at any authorized Mercedes-Benz Center.

! If the front-passenger seat is not occupied, do not engage the seat belt tongue in the buckle on the front-passenger seat. Otherwise, the Emergency Tensioning Device could be triggered in the event of an accident.

Children in the vehicle

Child restraint systems

Important safety notes

We recommend that all infants and children be properly restrained in an infant or child restraint system at all times while the vehicle is in motion.

Always use a child restraint system that is compatible with BabySmart™ on the front-passenger seat.

The use of seat belts and infant and child restraint systems is required by law in all 50 states, the District of Columbia, the U.S. territories and all Canadian provinces.

Infants and children must always be seated in an appropriate infant or child restraint system recommended for the size and weight of the child. The infant or child restraint system must be properly secured in accordance with the manufacturer's instructions. All infant or child restraint systems must comply with U.S. Federal Motor Vehicle Safety Standards 213 and 225 and Canadian Motor Vehicle Safety Standards 213 and 210.2.

An information label on the child restraint system indicates whether it meets these

standards. This information is also provided in the installation instructions supplied with the child restraint system.

Always read and follow the manufacturer's instructions when using an infant or child restraint system or booster seat.

Observe all warning signs in the vehicle interior and on the infant or child restraint.

⚠ WARNING

According to accident statistics, children are safer when properly restrained in the rear seating positions than in the front seating position. Thus, we strongly recommend that children be placed in the rear seats whenever possible. Regardless of seating position, children 12 years old and under must be seated and properly secured in an appropriate infant restraint, toddler restraint, or booster seat recommended for the size and weight of the child.

The infant or child restraint must be properly secured with the vehicle's seat belt, the seat belt and top tether strap, or lower anchors and top tether strap, fully in accordance with the child seat manufacturer's instructions.

Occupants, especially children, should always sit as upright as possible, wear the seat belt properly and use an appropriately sized infant restraint, toddler restraint, or booster seat recommended for the size and weight of the child.

Children can be killed or seriously injured by an inflating air bag. Note the following important information when circumstances require you to place a child in the front passenger seat:

- Children 12 years old and under must never ride in the front seat, except in a Mercedes-Benz authorized BabySmart™ compatible child seat, which operates with the BabySmart™ system installed in the vehicle to deactivate the front passenger front air bag when it is installed properly. Otherwise they will be struck by the air bag when it inflates in a crash. If this happens, serious or fatal injury will result.
- A child in a rear-facing child restraint on the front passenger seat will be seriously injured or even killed if the front passenger front air bag inflates in a collision which could occur under some circumstances, even with the air bag technology installed in your vehicle. The only means to completely eliminate this risk is to never place a child in a rear-facing child restraint in the front seat. We therefore strongly recommend that you always place a child in a rear-facing child restraint in a backseat.
- If you must install a rear-facing child restraint on the front passenger seat because circumstances require you to do so, make sure the [ ] [PASS. AIR BAG OFF] indicator lamp is illuminated, indicating that the front passenger front air bag is deactivated. Should the [ ] [PASS. AIR BAG OFF] indicator lamp not illuminate or go out while the restraint is installed, please check installation. Periodically check the [ ] [PASS. AIR BAG OFF] indicator lamp while driving to make sure the [ ] [PASS. AIR BAG OFF] indicator lamp is illuminated. If the [ ] [PASS. AIR BAG OFF] indicator lamp goes out or remains out, do not transport a child on the front passenger seat until the system has been repaired.

  A child in a rear-facing child restraint on the front passenger seat will be seriously injured or even killed if the front passenger front air bag inflates.
- If you have to place a child in a forward-facing child restraint on the front passenger seat, move the seat as far back as possible, use the proper child restraint recommended for the age, size and weight of the child, and secure child restraint with the vehicle's seat belt according to the child seat manufacturer's instructions.

⚠ WARNING

Infants and small children should never share a seat belt with another occupant. During an

accident, they could be crushed between the occupant and seat belt.

A child's risk of serious or fatal injuries is significantly increased if the child restraints are not properly secured in the vehicle and/or the child is not properly secured in the child restraint.

Children too big for a toddler restraint must ride in seats using regular seat belts. Position the shoulder belt across the chest and shoulder, not face or neck. A booster seat may be necessary to achieve proper seat belt positioning for children over 41 lb (18 kg) until they reach a height where a lap/shoulder belt fits properly without a booster.

When the child restraint is not in use, remove it from the vehicle or secure it with the seat belt to prevent the child restraint from becoming a projectile in the event of an accident.

If an infant or child is traveling in the vehicle:

▶ Secure the infant or child with an appropriate infant or child restraint recommended for the child's age and weight.

▶ Make sure that the infant or child is properly secured at all times while the vehicle is in motion.

⚠ **WARNING**

When leaving the vehicle, always remove the SmartKey from the ignition lock. Always take the SmartKey with you and lock the vehicle. Do not leave children unattended in the vehicle, even if they are secured in a child restraint system, or with access to an unlocked vehicle. A child's unsupervised access to a vehicle could result in an accident and/or serious personal injury. The children could:

- injure themselves on parts of the vehicle
- be seriously or fatally injured through excessive exposure to extreme heat or cold
- injure themselves or cause an accident with vehicle equipment that can be operated even if the SmartKey is removed from the ignition lock or removed from the vehicle, such as seat adjustment, steering wheel adjustment, or the memory function

If children open a door, they could injure other persons or get out of the vehicle and injure themselves or be injured by following traffic.

Do not expose the child restraint system to direct sunlight. The child restraint system's metal parts, for example, could become very hot, and the child could be burned on these parts.

⚠ **WARNING**

Do not carry heavy or hard objects in the passenger compartment or trunk unless they are firmly secured in place.

Unsecured or improperly positioned cargo increases a child's risk of injury in the event of

- strong braking maneuvers
- sudden changes of direction
- an accident

Special seat belt retractor

⚠ **WARNING**

Observe "Important safety notes" (▷ page 47).

All seat belts except the driver's seat belt are equipped with a special seat belt retractor. When activated, the special seat belt retractor ensures that the seat belt will not slacken once the child restraint system has been secured.

Installing a child restraint system:

▶ Always comply with the manufacturer's installation instructions.

▶ Pull the seat belt smoothly from the seat belt retractor.

▶ Engage the seat belt tongue in the belt buckle.

Activating the special seat belt retractor:

- ▶ Pull the seat belt out fully and let the seat belt retractor retract it again.
  While the seat belt is retracting, you should hear a ratcheting sound. The special seat belt retractor is activated.
- ▶ Push down on the child restraint system to take up any slack.

Removing a child restraint system/deactivating the special seat belt retractor:

- ▶ Always comply with the manufacturer's installation instructions.
- ▶ Press the release button on the seat belt buckle.
- ▶ Guide the seat belt tongue into the belt outlet.
  The special seat belt retractor is deactivated.

⚠ **WARNING**

Never release the seat belt buckle while the vehicle is in motion, since the special seat belt retractor will be deactivated.

LATCH-type (ISOFIX) child seat anchors in the rear

⚠ **WARNING**

Observe "Important safety notes" (▷ page 47).

⚠ **WARNING**

Children that are too large for a child restraint must travel in seats using normal seat belts. Position shoulder belt across the chest and shoulder, not face or neck.

In order to attain the correct seating position for children weighing over 41 lb (18 kg), it may be necessary to use a booster seat until they reach a height where a normal lap/shoulder seat belt lies properly across their bodies without the need for a booster seat.

Install the child restraint system according to the manufacturer's instructions.

The child restraint system must be installed firmly on both brackets.

An incorrectly installed child restraint system can come loose in the event of an accident, causing the child to be severely or fatally injured.

Child restraint systems/child restraint retaining brackets that are damaged or have suffered damage due to an impact must be replaced.

ISOFIX is a standardized securing system for specially designed child restraint systems on the rear seats. Securing rings for two LATCH-type (ISOFIX) child restraint systems are installed on the left and right of the rear seats.

Secure non-LATCH-type (ISOFIX) child restraint systems using the vehicle's seat belt system. Always install child restraint systems according to the manufacturer's instructions.

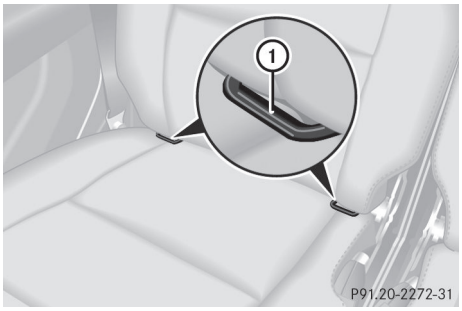

① Securing rings

- ▶ Install the LATCH-type (ISOFIX) child restraint system. Comply with the manufacturer's instructions when installing the LATCH-type (ISOFIX) child restraint system.
- ▶ When a LATCH-type (ISOFIX) child restraint system is installed, make sure that the center seat belt in the rear compartment is fully functional and can move freely.

Top Tether

⚠ **WARNING**

Observe "Important safety notes" (▷ page 47).

⚠ **WARNING**

Always lock the rear seat backrests in their upright position when the rear seats are occupied by passengers. Lock the rear seat backrests in their upright position before installing the Top Tether straps or when the cargo compartment is not in use. Make sure that rear seat backrests are secured properly by pushing and pulling on the seat backrests. If the seat backrest is not locked properly, the seat backrest could fold forward. The child restraint system is no longer supported properly or held in position and can no longer fulfill its function. This could cause serious or even fatal injuries.

Top Tether provides an additional connection between a child restraint system, secured with a LATCH-type (ISOFIX) child seat anchor, and the rear seat. This helps reduce the risk of injury even further.

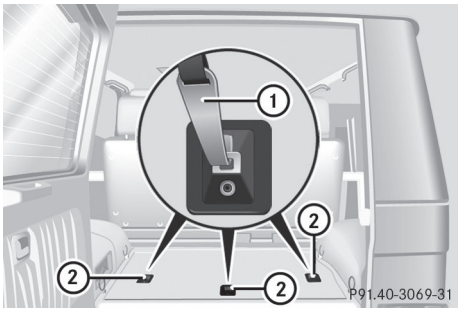

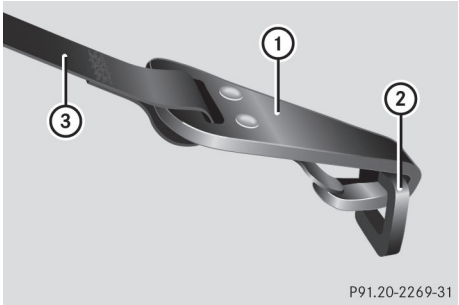

- ▶ Remove the cargo compartment cover (▷ page 192).
- ▶ Move the head restraint upwards.
- ▶ Install the LATCH-type (ISOFIX) child restraint system with Top Tether. Comply with the manufacturer's installation instructions when doing so.
- ▶ Route Top Tether belt ③ under the head restraint between the two head restraint bars.
- ▶ Attach Top Tether hook ① to Top Tether anchorage ② on the trunk floor.
- ▶ Make sure that Top Tether belt ③ is not twisted.
- ▶ Tension Top Tether belt ③. Comply with the manufacturer's installation instructions when doing so.
- ▶ Move the head restraint back down again slightly if necessary (▷ page 77). Make sure that you do not interfere with the correct routing of Top Tether belt ③.

⚠ **WARNING**

Only use the described top tether anchorage rings for the respective child seat. Other lashing eyelets could tear in case of an accident. Make sure the top tether straps are not crossed or twisted and the hook is attached and closed properly.

Child-proof locks

Child-proof locks for the rear doors

⚠ **WARNING**

Observe "Important safety notes" (▷ page 47).

⚠ **WARNING**

Children could open a rear door from inside the vehicle. This could result in serious injuries or an accident. Therefore, when children ride in the rear always secure the rear doors with the child-proof locks.

You secure each door individually with the child-proof locks on the rear doors. A door secured with a child-proof lock cannot be opened from inside the vehicle. When the vehicle is unlocked, the door can be opened from the outside.

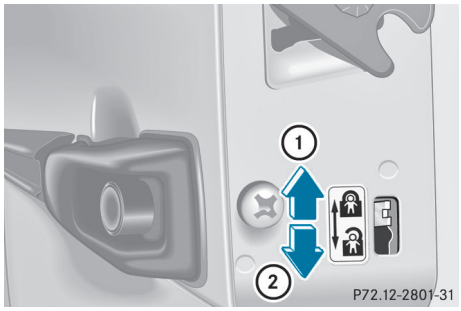

- **To activate:** press the child-proof lock lever down in the direction of arrow ②.
- Make sure that the child-proof locks are working properly.
- **To deactivate:** press the child-proof lock lever up in the direction of arrow ①.

Override feature for the rear side windows

⚠ **WARNING**

Observe "Important safety notes" (▷ page 47).

⚠ **WARNING**

When children ride on the vehicle's rear seats, activate the override switch. Otherwise, the children could be injured, e.g. by trapping themselves in the rear side window.

- **To deactivate:** slide override switch ① to the right.
  The ● symbol becomes visible. Operation is only possible using the switches in the driver's door.
- **To release:** slide override switch ① to the left.
  The ● symbol is covered. Operation using the switches in the rear compartment is possible again.

Panic alarm

▶ **To activate:** press PANIC button ① for at least one second.
An alarm sounds and the indicator lamp flashes.

▶ **To deactivate:** press PANIC button ① again.

or

▶ Insert the SmartKey into the ignition lock.

ℹ USA only:

This device complies with Part 15 of the FCC Rules. Operation is subject to the following two conditions:

1. This device may not cause harmful interference, and

2. this device must accept any interference received, including interference that may cause undesired operation.

Any unauthorized modification to this device could void the user's authority to operate the equipment.

ℹ Canada only:

This device complies with RSS-210 regulations of Industry Canada. Operation is subject to the following two conditions:

1. This device may not cause interference, and

2. this device must withstand any interference received, including interference that may cause undesired operation of the device.

Any unauthorized modification to this device could void the user's authority to operate the equipment.

Driving safety systems

Driving safety systems overview

In this section, you will find information about the following driving safety systems:

- ABS (**A**nti-lock **B**raking **S**ystem)
- BAS (**B**rake **A**ssist **S**ystem)
- ESP® (**E**lectronic **S**tability **P**rogram)
- EBD (**e**lectronic **b**rake force **d**istribution)

Important safety notes

⚠ **WARNING**

The following factors increase the risk of accidents:

- Excessive speed, especially in turns
- Wet and slippery road surfaces
- Following another vehicle too closely

The driving safety systems described in this section cannot reduce these risks or prevent the natural laws of physics from acting on the vehicle. They cannot increase braking or steering efficiency beyond that afforded by the condition of the vehicle brakes and tires or the traction afforded.

Only a safe, attentive, and skillful driver can prevent accidents.

The capabilities of a vehicle equipped with the driving safety systems described in this section must never be exploited in a reckless or dangerous manner which could jeopardize the user's safety or the safety of others.

Always adjust your driving style to the prevailing road and weather conditions and keep a safe distance to other road users and objects on the street.

If a driving system malfunctions, other driving safety systems may also switch off. Observe indicator and warning lamps that may come on as well as messages in the multifunction display that may appear.

⚠ **WARNING**

The ABS, the BAS, and the ESP® switch off when the differential locks are switched on.

When the ABS, the BAS, and the ESP® are switched off

- wheels may lock during hard braking
- steering capabilities are reduced

▷▷

- braking distance is increased
- vehicle stability in standard driving maneuvers is increased

Make sure the differential locks are switched on at all times except when driving off-road for example. Switch on the differential locks immediately when returning from off-road driving.

ℹ Please note that the driving safety systems described only work as effectively as possible if there is adequate contact between the tires and the road surface. Pay particular attention to the information regarding tires, recommended minimum tire tread depths, etc. in the "Wheels and tires" section (▷ page 242).

In wintry driving conditions, always use winter tires (M+S tires) and if necessary, snow chains. Only in this way will the driving safety systems described in this section work as effectively as possible.

ABS (Anti-lock Braking System)

Important safety notes

⚠ **WARNING**

Observe "Important safety notes" (▷ page 53).

ABS regulates brake pressure in such a way that the wheels do not lock when you brake. This allows you to continue steering the vehicle when braking.

ABS operates above a speed of about 5 mph(8 km/h) regardless of road-surface conditions, provided the differential locks are not active. ABS works on slippery surfaces, even when you only brake gently.

⚠ **WARNING**

If the ABS malfunctions, other driving systems such as the BAS or the ESP® are also switched off. Observe indicator and warning lamps that may come on as well as messages in the multifunction display that may appear.

If the ABS malfunctions, the wheels may lock during hard braking, reducing the steering capability and extending the braking distance.

The (ABS) warning lamp in the instrument cluster lights up when the ignition is switched on. It goes out when the engine is running.

Braking

If ABS intervenes when braking, you will feel a pulsing in the brake pedal.

▶ **If ABS intervenes:** continue to depress the brake pedal with force until the braking situation is over.

▶ **To make a full brake application:** depress the brake pedal with full force.

The pulsating brake pedal can be an indication of hazardous road conditions and functions as a reminder to take extra care while driving.

⚠ **WARNING**

Do not pump the brake pedal. Use firm, steady brake pedal pressure instead. Pumping the brake pedal defeats the purpose of the ABS and significantly reduces braking effectiveness.

Off-road ABS

If the LOW shift range (▷ page 145) is selected on the transfer case, an ABS system specifically suited to off-road terrain is activated.

At speeds below 37 mph(60 km/h), the front wheels lock periodically when braking. The digging-in effect achieved in the process reduces the stopping distance on off-road terrain. This limits steering capability.

BAS (Brake Assist System)

ℹ Observe the "Important safety notes" section (▷ page 53).

BAS operates in emergency braking situations. If you depress the brake pedal quickly, BAS automatically boosts the braking force, thus shortening the stopping distance.

▶ Keep the brake pedal firmly depressed until the emergency braking situation is over. ABS prevents the wheels from locking.

The brakes will function as usual once you release the brake pedal. BAS is deactivated.

⚠ **WARNING**

If the BAS malfunctions, the brake system still functions, but without the additional brake boost available that the BAS would normally provide in an emergency braking maneuver. Therefore, the braking distance may increase.

ESP® (Electronic Stability Program)

Important safety notes

⚠ **WARNING**

Observe "Important safety notes" (▷ page 53).

ESP® monitors driving stability and traction. Traction is the power transmission between the tires and the road surface.

If ESP® detects that the vehicle is deviating from the direction desired by the driver, one or more wheels are braked to stabilize the vehicle. If necessary, the engine output is also modified to keep the vehicle on the desired course within physical limits. ESP® assists the driver when pulling away on wet or slippery roads. ESP® can also stabilize the vehicle during braking.

If ESP® intervenes, the warning lamp flashes in the instrument cluster.

⚠ **WARNING**

Under no circumstances should you deactivate ESP® when the ESP® warning lamp in the instrument cluster flashes. Proceed as follows:

- when driving off, apply as little throttle as possible.
- while driving, ease up on the accelerator pedal.
- adapt your speed to suit the prevailing road and weather conditions.

Failure to observe these guidelines could cause the vehicle to skid. ESP® cannot prevent accidents resulting from excessive speed.

! Switch the ignition off when:

- the parking brake is being tested using a dynamometer
- the vehicle is being towed with the front or rear axle raised

Application of the brakes by ESP® may otherwise destroy the brake system.

! Only operate the vehicle for a maximum of ten seconds on a brake test dynamometer. Switch off the ignition.

Application of the brakes by ESP® may otherwise destroy the brake system.

! Function or performance tests may only be performed on a 2-axle dynamometer. If you wish to operate the vehicle on such a dynamometer, please consult an authorized Mercedes-Benz Center beforehand. You could otherwise damage the drive train or the brake system.

ⓘ Only use wheels with the recommended tire sizes. Only then will ESP® function properly.

ⓘ If differential locks are switched on, ABS, BAS and ESP® switch themselves off automatically.

4ETS (Electronic Traction System)

WARNING

Observe "Important safety notes" (▷ page 53).

Traction control is part of ESP®.

Traction control brakes the drive wheels individually if they spin. This enables you to pull away and accelerate on slippery surfaces, for example if the road surface is slippery on one side. In addition, more drive torque is transferred to the wheel or wheels with traction.

Traction control remains active if you deactivate ESP®.

Traction control is no longer active at speeds above approximately 37 mph (60 km/h).

Deactivating/activating ESP®

WARNING

The ESP® should not be switched off during normal driving other than in the circumstances described below. Disabling the system will reduce vehicle stability in driving maneuvers.

ESP® is activated automatically when the engine is started.

It may be best to deactivate ESP® in the following situations:

- when using snow chains
- in deep snow
- on sand or gravel

WARNING

Switch on ESP® immediately if one of the previously stated conditions is no longer met. Otherwise, ESP® cannot stabilize the vehicle if it begins to lurch or when a wheel spins.

If you deactivate ESP®:

- ESP® no longer improves driving stability.
- the engine's torque is no longer limited and the drive wheels can spin. The spinning of the wheels results in a cutting action, which provides better grip.
- traction control is still activated.
- ESP® still provides support when you brake.
- and drive over 37 mph (60 km/h), ESP® intervenes when the grip limit of a wheel is reached, even if it is deactivated.

If ESP® is deactivated and one or more wheels start to spin, the warning lamp in the instrument cluster flashes. In such situations, ESP® will not stabilize the vehicle.

If you have deactivated ESP®, it is automatically reactivated if you exceed a speed of 37 mph (60 km/h) or a certain lateral acceleration.

▶ **To deactivate:** press button ① until the warning lamp lights up in the instrument cluster.

WARNING

When the ESP® OFF warning lamp is lit, ESP® is deactivated.

If the ESP® warning lamp and the ESP® OFF warning lamp remain lit, ESP® is not available due to a malfunction.

When ESP® is deactivated or not operational, vehicle stability in standard driving maneuvers is reduced.

Adapt your speed and driving to the prevailing road conditions and to the non-operating status of the ESP®.

! Avoid spinning the driven wheels for an extended period with ESP® deactivated. You could otherwise damage the drivetrain.

▶ **To activate:** press button ① until the OFF warning lamp goes out in the instrument cluster.

EBD (electronic brake force distribution)

ℹ Observe the "Important safety notes" section (▷ page 53).

EBD monitors and controls the brake pressure on the rear wheels to improve driving stability while braking.

⚠ **WARNING**

If the EBD malfunctions, the brake system will still function with full brake boost. However, the rear wheels could lock up during emergency braking situations, for example. You could lose control of the vehicle and cause an accident.

Adapt your driving style to the changed driving characteristics.

Theft deterrent locking systems

Immobilizer

The immobilizer prevents your vehicle from being started without the correct key.

When leaving the vehicle, always take the SmartKey with you and lock the vehicle. The engine can be started by anyone with a valid SmartKey that is left inside the vehicle.

▶ **To activate:** remove the SmartKey from the ignition lock.

▶ **To deactivate:** switch on the ignition.

ℹ The immobilizer is always deactivated when you start the engine.

In the event that the engine cannot be started when the starter battery is fully charged, the immobilizer may be faulty.

Contact an authorized Mercedes-Benz Center or call 1-800-FOR-MERCedes (in USA) or 1-800-387-0100 (in Canada).

ATA (Anti-Theft Alarm system)

A visual and audible alarm is triggered if the alarm system is armed and you open:

- a door
- a door using the mechanical key
- the rear door
- the hood

The alarm is also triggered if:

- the position of the vehicle is changed.
- a window is smashed.

The alarm is not switched off, even if you close the open door that has triggered it, for example.

ℹ If the alarm stays on for more than 30 seconds, the emergency call system mbrace (USA only) or TELEAID (Canada only) initiates a call to the Customer Assistance Center automatically. The emergency call system initiates the call provided that:

- you have subscribed to the mbrace/TELEAID service.
- the mbrace/TELEAID service has been activated properly.
- the required mobile phone, power supply and GPS are available.

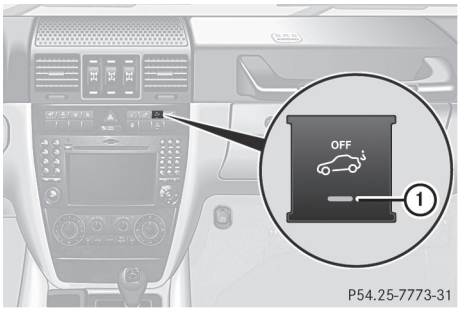

P54.25-7773-31

▶ **To arm:** lock the vehicle with the SmartKey.
Indicator lamp ① flashes. The alarm system is armed after approximately 15 seconds.

▶ **To deactivate:** unlock the vehicle with the SmartKey.

ℹ If you then do not open a side door or the rear door, the alarm system switches itself back on again after approximately 40 seconds.

▶ **To stop the alarm:** insert the SmartKey into the ignition lock.
The alarm is switched off.

or

▶ Press the [🔓] or [🔒] button on the SmartKey.
The alarm is switched off.

Tow-away alarm

An audible and visual alarm is triggered if your vehicle's angle of inclination is altered while the tow-away alarm is armed. This occurs if the vehicle is jacked up on one side, for example.

▶ **To arm:** lock the vehicle with the SmartKey.
The tow-away alarm is armed after approximately 30 seconds.

▶ **To deactivate:** unlock the vehicle with the SmartKey.
The tow-away alarm is deactivated automatically.

To prevent a false alarm, deactivate the tow-away alarm manually if your vehicle:

- is being transported
- is being loaded onto a ferry or car transporter, for example
- is parked on a movable surface, e.g. in a split-level garage

Deactivating:

▶ Remove the SmartKey from the ignition lock.

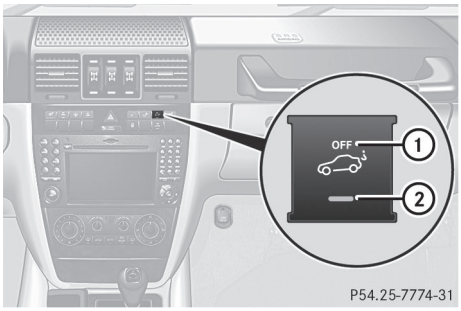

▶ Press button ①.
Indicator lamp ② lights up briefly.

▶ Lock the vehicle with the SmartKey.
The tow-away alarm remains deactivated until the vehicle is unlocked and locked again.

Useful information 60
SmartKey 60
Doors 65
Cargo compartment 67
Side windows 68
Sliding sunroof 70

Useful information

ℹ This Operator's Manual describes all models and all standard and optional equipment of your vehicle available at the time of publication of the Operator's Manual. Country-specific differences are possible. Please note that your vehicle may not be equipped with all features described. This also applies to safety-related systems and functions.

ℹ Please read the information on qualified specialist workshops (▷ page 20).

SmartKey

Important safety notes

⚠ **WARNING**

When leaving the vehicle, always remove the SmartKey from the ignition lock. Always take the SmartKey with you and lock the vehicle. Do not leave children unsupervised in the vehicle, even if they are secured in a child restraint system, and do not give them access to an unlocked vehicle. A child's unsupervised access to a vehicle could result in an accident and/or serious personal injury. They could:

- injure themselves on vehicle parts
- be seriously or fatally injured by extreme heat or cold
- injure themselves or have an accident with vehicle equipment that may still be in operation even after the SmartKey has been removed from the ignition, such as the seat adjustment, steering wheel adjustment or memory function.

If children open a door, they could cause severe or even fatal injury to other persons; if they get out of the vehicle, they could injure themselves when doing so or be seriously or even fatally injured by any passing traffic.

Do not expose the child restraint system to direct sunlight. The child restraint system's metal parts, for example, could become very hot, and a child could be burned on these parts.

⚠ **WARNING**

Do not carry heavy or hard objects in the passenger compartment or cargo compartment unless they are firmly secured in place.

Unsecured or improperly positioned cargo increases a child's risk of injury in the event of

- strong braking maneuvers
- sudden changes of direction
- an accident

General notes

If you cannot lock or unlock the vehicle with the SmartKey, either the battery in the SmartKey is discharged, the SmartKey is faulty or the starter battery is discharged.

▶ Check the battery in the SmartKey and replace it if necessary (▷ page 62).

▶ Unlock the driver's door using the mechanical key (▷ page 66).

▶ Lock the vehicle using the mechanical key (▷ page 66).

▶ Have the starter battery and battery contacts checked at an authorized Mercedes-Benz Center.

If the SmartKey is faulty, contact Roadside Assistance or an authorized Mercedes-Benz Center.

SmartKey functions

General notes

ℹ USA only:

This device complies with Part 15 of the FCC Rules. Operation is subject to the following two conditions:

1. This device may not cause harmful interference, and

2. This device must accept any interference received, including interference that may cause undesired operation.

Any unauthorized modification to this device could void the user's authority to operate the equipment.

ℹ Canada only:

This device complies with RSS-210 of Industry Canada. Operation is subject to the following two conditions:

1. This device may not cause interference, and

2. this device must accept any interference received, including interference that may cause undesired operation of the device.

Any unauthorized modification to this device could void the user's authority to operate the equipment.

Locking and unlocking centrally

The SmartKey centrally locks/unlocks:

- the doors
- the rear door
- the fuel filler flap

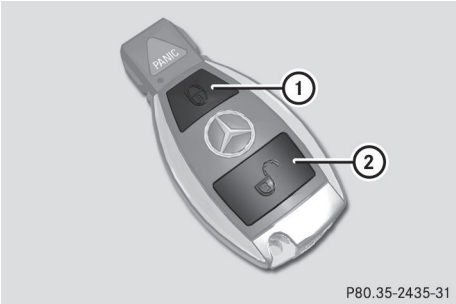

① 🔒 To lock the vehicle

② 🔓 To unlock the vehicle

When unlocking, the turn signals flash once. When locking, they flash three times.

▶ **To unlock centrally:** press the 🔓 button.

If you do not open a door or the tailgate within approximately 40 seconds of unlocking the vehicle:

- the vehicle is locked again.
- the theft deterrent locking system is armed again.

▶ **To lock centrally:** press the 🔒 button.

Changing the settings of the locking system

You can change the setting of the locking system in such a way that only the driver's door and the fuel filler flap are unlocked. This is useful if you frequently travel on your own.

▶ **To change the setting:** press and hold down the 🔓 and 🔒 buttons simultaneously for approximately six seconds until battery check lamp flashes twice.

The SmartKey now functions as follows:

▶ **To unlock the driver's door and fuel filler flap:** press the 🔓 button once.

▶ **To unlock centrally:** press the 🔓 button twice.

▶ **To lock centrally:** press the 🔒 button.

Restoring the factory settings

▶ Press the 🔓 and 🔒 buttons simultaneously for approximately six seconds until the battery check lamp flashes twice.

Mechanical key

General notes

If the vehicle can no longer be unlocked with the SmartKey, use the mechanical key.

If you use the mechanical key to unlock and open the driver's door or the trunk lid, the

anti-theft alarm system will be triggered (▷ page 57).

▶ **To end the alarm:** insert the key into the ignition lock.

Removing the mechanical key

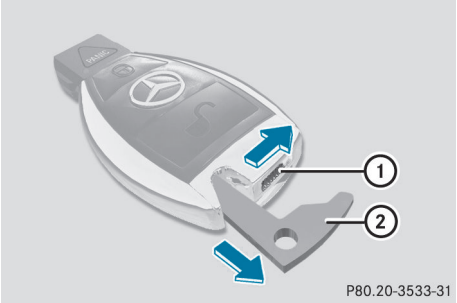

▶ Push release catch ① in the direction of the arrow and at the same time, remove mechanical key ② from the SmartKey.

SmartKey battery

Important safety notes

Have the batteries changed at a qualified specialist workshop.

⚠ **WARNING**

Batteries contain toxic substances.

Swallowing batteries can lead to serious health issues or death.

Keep batteries out of the reach of children. Seek medical attention immediately if a battery is swallowed.

⚠ **WARNING**

The SmartKey batteries contain perchlorate material, which may require special handling and regard for the environment. Observe government disposal guidelines. California residents, see **www.dtsc.ca.gov/HazardousWaste/Perchlorate/index.cfm**.

Checking the battery

▶ Press the [🔒] or [🔓] button.
The SmartKey battery is working properly if battery check lamp ① lights up briefly.

If battery check lamp ① does not light up briefly during the test, the SmartKey battery is discharged.

▶ Replace the SmartKey battery (▷ page 62).

ℹ You can obtain a SmartKey battery at any authorized Mercedes-Benz Center.

ℹ If the SmartKey battery is checked within the signal range of the vehicle, pressing the [🔒] or [🔓] button closes or opens the vehicle.

Changing the battery

You require a CR 2025 3 V cell battery.

▶ Take the mechanical key out of the SmartKey (▷ page 61).

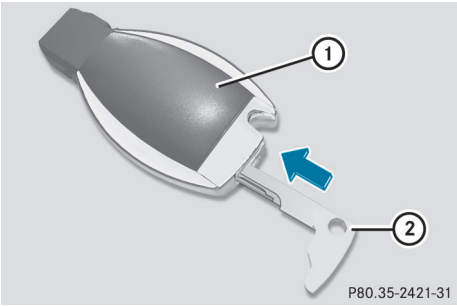

▶ Press mechanical key ② into the opening in the SmartKey in the direction of the

arrow until battery tray cover ① opens. Do not hold the cover closed while doing so.

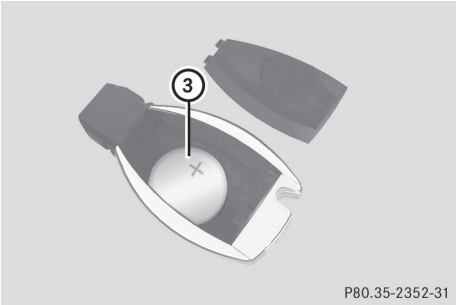

- ▶ Remove the cover of the battery tray.
- ▶ Repeatedly tap the SmartKey against your palm until battery ③ falls out.
- ▶ Insert the new battery with the positive terminal facing upwards. Use a lint-free cloth to do so.
- ▶ Insert the front tabs of the battery tray's cover first, and then press to close it.
- ▶ Check the function of all SmartKey buttons on the vehicle.

Problems with the SmartKey	
Problem	**Possible causes/consequences and ▶ Solutions**
You cannot lock or unlock the vehicle using the SmartKey.	The SmartKey battery is discharged or nearly discharged. ▶ Point the tip of the SmartKey at the driver's door handle from a distance of approximately 1.5 ft (50 cm) and try to unlock or lock the vehicle again. If this does not work: ▶ Check the SmartKey battery and replace it if necessary (▷ page 62). ▶ Lock or unlock the vehicle using the mechanical key (▷ page 66).
	The SmartKey is faulty. ▶ Lock or unlock the vehicle using the mechanical key (▷ page 66). ▶ Have the SmartKey checked at a qualified specialist workshop.
You have lost a SmartKey.	▶ Have the SmartKey canceled at an authorized Mercedes-Benz Center. ▶ Report the loss immediately to the vehicle insurers. ▶ If necessary, have the locks changed as well.
You have lost the mechanical key.	▶ Report the loss immediately to the vehicle insurers. ▶ If necessary, have the locks changed as well.
The SmartKey cannot be turned in the ignition lock.	The SmartKey has been in position **0** for a considerable time. ▶ Remove the SmartKey and reinsert it into the ignition lock. ▶ Check the battery and charge it if necessary (▷ page 231). ▶ Start the engine.
	The on-board voltage is too low. ▶ Switch off non-essential consumers, e.g. seat heating or interior lighting, and try to turn the SmartKey again. If this does not work: ▶ Check the battery and charge it if necessary (▷ page 231). or ▶ Jump-start the vehicle (▷ page 233). or ▶ Consult a qualified specialist workshop.

Doors

Important safety notes

⚠ **WARNING**

When leaving the vehicle, always remove the SmartKey from the ignition lock. Always take the SmartKey with you and lock the vehicle. Do not leave children unsupervised in the vehicle, even if they are secured in a child restraint system, and do not give them access to an unlocked vehicle. A child's unsupervised access to a vehicle could result in an accident and/or serious personal injury. They could:

- injure themselves on vehicle parts
- be seriously or fatally injured by extreme heat or cold
- injure themselves or have an accident with vehicle equipment that may still be in operation even after the SmartKey has been removed from the ignition, such as the seat adjustment, steering wheel adjustment or memory function.

If children open a door, they could cause severe or even fatal injury to other persons; if they get out of the vehicle, they could injure themselves when doing so or be seriously or even fatally injured by any passing traffic.

Do not expose the child restraint system to direct sunlight. The child restraint system's metal parts, for example, could become very hot, and a child could be burned on these parts.

⚠ **WARNING**

Do not carry heavy or hard objects in the passenger compartment or cargo compartment unless they are firmly secured in place.

Unsecured or improperly positioned cargo increases a child's risk of injury in the event of

- strong braking maneuvers
- sudden changes of direction
- an accident

Unlocking and opening doors from inside

You can open a door anytime from inside the vehicle even if it has been locked, unless the child-proof locks (▷ page 52) have been activated.

If the vehicle has previously been locked with the SmartKey, opening a door from the inside will trigger the anti-theft alarm system. Switch off the alarm (▷ page 57).

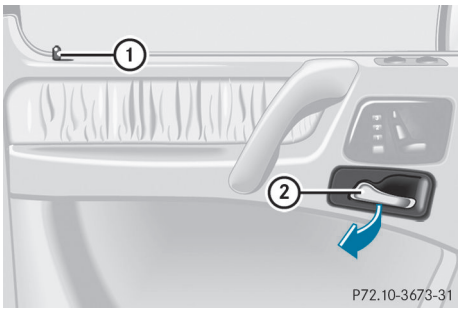

▶ **Front doors:** pull door handle ②.
If the door is locked, locking knob ① pops up. The door is unlocked and can be opened.

▶ **Rear doors:** pull locking knob ① upwards. The door is unlocked.

▶ Pull door handle ②.

Centrally locking and unlocking the vehicle from the inside

You can centrally lock or unlock the vehicle from the inside. This feature may be useful if, for example, you wish to unlock the front-passenger door from the inside or lock the vehicle before you pull away.

The central locking button does not lock or unlock the fuel filler flap.

ⓘ You cannot unlock the vehicle centrally from the inside if the vehicle has been locked from the outside using the SmartKey.

ℹ It is only possible to lock the vehicle centrally if all doors are closed.

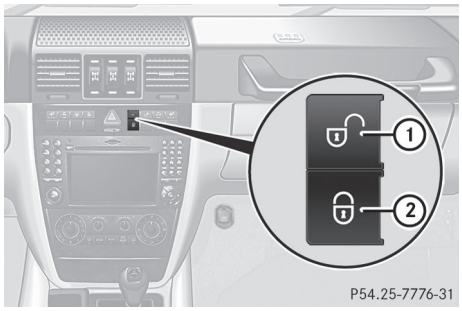

▶ **To unlock:** press button ①.

▶ **To lock:** press button ②.

You can open a front door from inside the vehicle even if it has been locked. Only open the door when the traffic situation permits.

If the vehicle has been locked with the central locking button:

- and the SmartKey is restored to the factory settings, the entire vehicle is unlocked if a front door is opened from inside the vehicle.
- and the SmartKey is set to an individual setting, only the front door that is opened from inside the vehicle is unlocked.

If the vehicle has been locked centrally with the SmartKey, it does not unlock if you use the central locking button.

Automatic locking feature

The vehicle locks automatically when the ignition is switched on and the wheels of the vehicle are moving at a speed of more than 9 mph (15 km/h). There is therefore a risk of being locked out when the vehicle is being pushed, towed or tested on a dynamometer.

You can switch the automatic locking function on and off using the on-board computer (▷ page 161).

Unlocking the driver's door (mechanical key)

If the vehicle can no longer be unlocked centrally with the SmartKey:

▶ Take the mechanical key out of the SmartKey (▷ page 61).

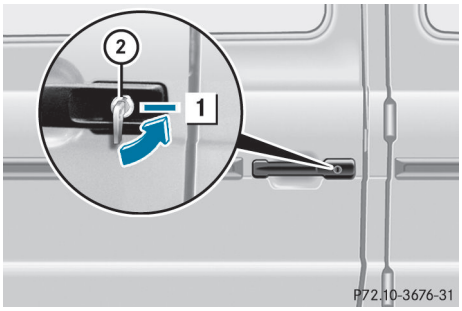

▶ Insert the mechanical key into the lock of the driver's door as far as it will go.

▶ Turn mechanical key ② counter-clockwise to position 1.
The door is unlocked.

▶ Turn mechanical key ② back and remove it.

Locking the vehicle

If the vehicle can no longer be locked centrally with the SmartKey:

▶ Close the front-passenger door, the rear doors and the tailgate.

▶ Press the locking button (▷ page 65).

▶ Make sure that the locking knobs on the doors are still visible. Press down the locking knobs by hand, if necessary.

▶ Close the driver's door from the outside.

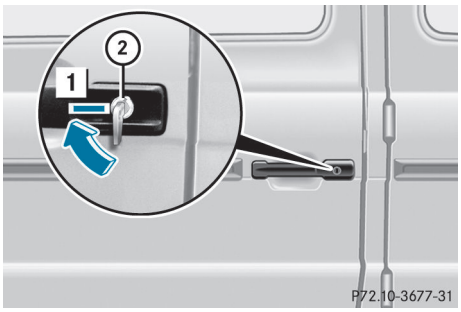

▶ Take mechanical key ② out of the SmartKey (▷ page 61).
▶ Insert mechanical key ② into the lock of the driver's door as far as it will go.
▶ Turn mechanical key ② clockwise as far as it will go to position 1.
▶ Turn the mechanical key back and remove it.
▶ Make sure that the doors and the tailgate are locked.

ℹ If you lock the vehicle as described above, the fuel filler flap is not locked. The anti-theft alarm system is not armed.

Cargo compartment

Important safety notes

Do not leave the SmartKey in the cargo compartment. Otherwise, you could lock yourself out.

⚠ **WARNING**

When leaving the vehicle, always remove the SmartKey from the ignition lock. Always take the SmartKey with you and lock the vehicle. Do not leave children unsupervised in the vehicle, even if they are secured in a child restraint system, and do not give them access to an unlocked vehicle. A child's unsupervised access to a vehicle could result in an accident and/or serious personal injury. They could:

- injure themselves on vehicle parts
- be seriously or fatally injured by extreme heat or cold
- injure themselves or have an accident with vehicle equipment that may still be in operation even after the SmartKey has been removed from the ignition, such as the seat adjustment, steering wheel adjustment or memory function.

If children open a door, they could cause severe or even fatal injury to other persons; if they get out of the vehicle, they could injure themselves when doing so or be seriously or even fatally injured by any passing traffic.

Do not expose the child restraint system to direct sunlight. The child restraint system's metal parts, for example, could become very hot, and a child could be burned on these parts.

⚠ **WARNING**

Do not carry heavy or hard objects in the passenger compartment or cargo compartment unless they are firmly secured in place.

Unsecured or improperly positioned cargo increases a child's risk of injury in the event of

- strong braking maneuvers
- sudden changes of direction
- an accident

⚠ **WARNING**

The tailgate swings open to one side. Always make sure there is sufficient clearance for the tailgate.

Make sure the tailgate is closed when the engine is running and while driving. Among other dangers, deadly carbon monoxide (CO) gases may enter vehicle interior resulting in unconsciousness and death.

! The tailgate swings out to the side when opened. Therefore, make sure that there is sufficient clearance.

Opening

You can only open the rear door after unlocking it first.

▶ Press the button on the SmartKey.

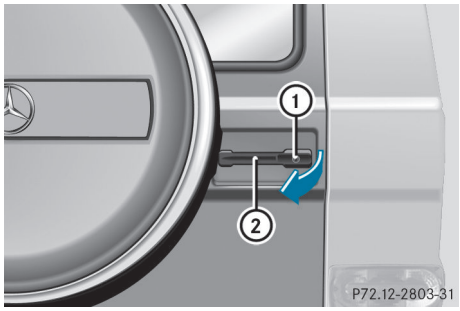

▶ Press release button ① and pull door handle ②.

▶ Open the rear door.

Closing

⚠ **WARNING**

To prevent possible personal injury, always keep hands and fingers away from the cargo compartment opening when closing the tailgate. Be especially careful when small children are around.

Side windows

Important safety notes

⚠ **WARNING**

When closing the door windows, make sure there is no danger of anyone being harmed by the closing procedure.

Activate the override switch when children are riding in the back seats of the vehicle. The children may otherwise injure themselves, e.g. by becoming trapped in the window opening.

The closing of the door windows can be immediately halted by releasing the switch or by releasing button on the SmartKey.

⚠ **WARNING**

Do not keep any part of your body up against the window pane when opening a window. The downward motion of the pane may pull that part of your body down between the window pane and the door frame and trap it there. If there is a risk of entrapment, release the switch and pull it to close the window.

Opening and closing the side windows

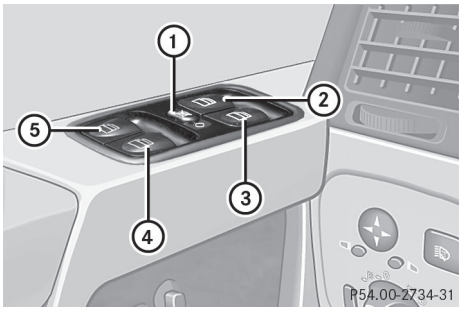

① Override feature for rear door windows
② Front left
③ Front right
④ Rear right
⑤ Rear left

The switches for all side windows are located on the driver's door. There is also a switch on each door for the corresponding side window.

ℹ The side windows cannot be operated from the rear when the override feature for the side windows is activated.

▶ Turn the SmartKey to position **1** or **2** in the ignition lock.

▶ **To open:** press the corresponding switch.

▶ **To close:** pull the corresponding switch.

ℹ If you press the switch beyond the point of resistance while opening, an automatic opening/closing process is started. You can stop automatic operation by operating the switch again.

Convenience opening feature

You can ventilate the vehicle before you start driving. To do this, you can use the SmartKey to simultaneously:

- unlock the vehicle
- open the side windows
- open the sliding sunroof

ℹ The convenience opening feature can only be operated using the SmartKey. The SmartKey must be close to the driver's door handle.

▶ Point the tip of the SmartKey at the driver's door handle.

▶ Press and hold the button until the side windows and the sliding sunroof are in the desired position.

Convenience closing

When you lock the vehicle, you can simultaneously:

- close the side windows
- close the sliding sunroof

⚠ **WARNING**

When closing the windows and the tilt/sliding sunroof, make sure there is no danger of anyone being harmed by the closing procedure.

If potential danger exists, proceed as follows:

- Release button to stop the closing procedure. To open, press and hold button . To continue the closing procedure after making sure that there is no danger of anyone being harmed by the closing procedure, press and hold button .

ℹ The SmartKey must be close to the driver's door handle.

▶ Point the tip of the SmartKey at the driver's door handle.

▶ Press and hold the button until the side windows and the sliding sunroof are fully closed.

▶ Make sure that all the side windows and the sliding sunroof are closed.

▶ **To interrupt convenience closing:** release the button.

Problems with the side windows

Problem: a side window cannot be closed because objects are trapped between the side window and the door frame.

▶ Remove the objects.

▶ Close the side window.

Problem: a side window cannot be closed because objects in the guide rail are preventing the window from being raised.

▶ Remove the objects.

▶ Close the side window.

Sliding sunroof

Important safety notes

⚠ **WARNING**

Children could injure themselves if they operate the sliding sunroof.

Do not leave children unsupervised in the vehicle. Always take the SmartKey with you when leaving the vehicle, even if you are only leaving it for a short time.

⚠ **WARNING**

When closing the sliding sunroof, make sure that there is no danger of anyone being harmed by the closing procedure.

The opening procedure of the sliding sunroof can be immediately halted by releasing the sunroof switch or, if the sunroof switch was moved past the resistance point and released, by moving the sunroof switch in any direction.

The closing procedure of the sliding sunroof can be immediately halted by releasing the sliding sunroof switch. The closing procedure of the sliding sunroof can be immediately reversed by moving the sliding sunroof switch toward ① or ④.

If you are not wearing a seat belt, or are not wearing it correctly, there is a risk that you could be thrown through the opening in the event of the vehicle overturning. An opening of this kind poses a risk of injury even to passengers who are wearing their seat belts correctly, as parts of the body could protrude from the vehicle interior.

! Only open the sliding sunroof if it is free of snow and ice. Otherwise, malfunctions may occur.

Do not allow anything to protrude from the sliding sunroof. Otherwise, the seals could be damaged.

! If the sliding sunroof still cannot be opened or closed as a result of a malfunction, contact a qualified specialist workshop.

! The weather can change abruptly. It could start to rain or snow. Make sure that the sliding sunroof is closed when you leave the vehicle. The vehicle electronics can be damaged if water enters the vehicle interior.

ⓘ Resonance noises can occur in addition to the usual airflow noises when the sliding sunroof is open. They are caused by minor pressure fluctuations in the vehicle interior. Change the position of the sliding sunroof or open a side window slightly to reduce or eliminate these noises.

Opening and closing the sliding sunroof

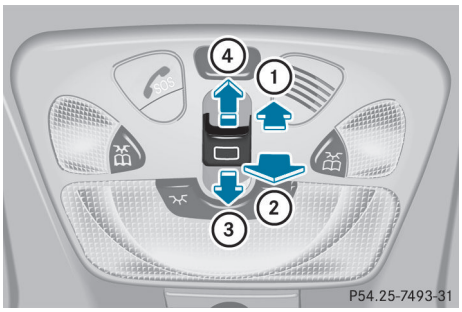

Overhead control panel

① To raise

② To lower

③ To close

④ To open

▶ Turn the SmartKey to position **1** or **2** in the ignition lock.

▶ Press or pull the ▭ switch in the corresponding direction.

ⓘ If you press the ▭ switch beyond the point of resistance while opening, an automatic opening process is started. You can stop automatic operation by operating the switch again.

Operating the sliding sunroof manually

The actuator is located in the cargo compartment, on the left-hand side behind the rear wall trim.

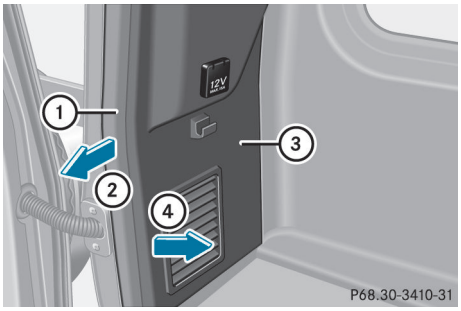

- Open the rear door.
- Pull off edge protection ① from the door pillar in the direction of arrow ②.
- Pull off rear wall trim ③ in the direction of arrow ④ until the electrical connections can be reached.
- Disconnect the electrical connections.
- Remove rear wall trim ③ completely.

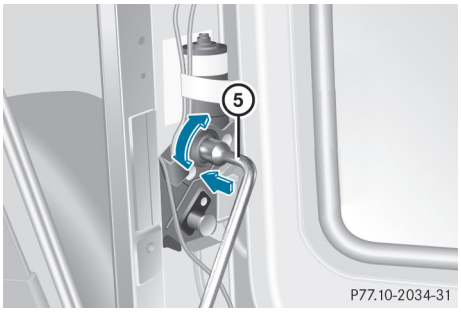

- Take lug wrench ⑤ out of the vehicle tool kit (▷ page 224).
- Place lug wrench ⑤ onto the hexagonal nut of the actuator.
- **To open:** turn lug wrench ⑤ counter-clockwise.
- **To close:** turn lug wrench ⑤ clockwise.

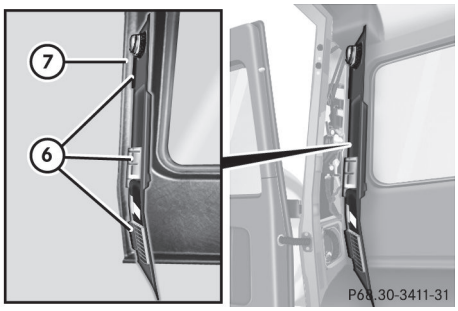

- Reconnect the electrical connections.
- Re-install rear wall trim ③.
  When doing so, hook lugs ⑥ of rear wall trim ③ into vehicle side wall ⑦.
- Re-install edge protection ①.
- Close the rear door.

Useful information 74
Correct driver's seat position 74
Seats 75
Steering wheel 81
Mirrors 84
Memory functions 85

Useful information

ℹ This Operator's Manual describes all models and all standard and optional equipment of your vehicle available at the time of publication of the Operator's Manual. Country-specific differences are possible. Please note that your vehicle may not be equipped with all features described. This also applies to safety-related systems and functions.

ℹ Please read the information on qualified specialist workshops (▷ page 20).

Correct driver's seat position

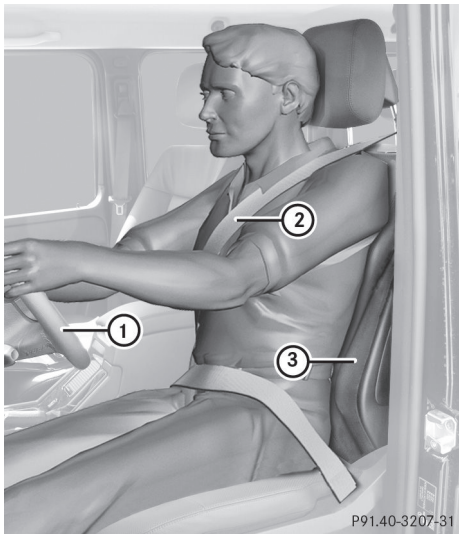

Observe the safety guidelines on (▷ page 75).

▶ Check whether you have adjusted seat ③ properly.

Electrical seat adjustment (▷ page 76).

When adjusting the seat, make sure:

- you are as far away from the driver's air bag as possible.
- you are sitting in a normal upright position.
- you can fasten the seat belt properly.
- you have moved the backrest to an almost vertical position.
- you have set the seat cushion angle so that your thighs are gently supported.
- you can depress the pedals properly.

▶ Check whether the head restraint is adjusted properly (▷ page 77).

When doing so, make sure that you have adjusted the head restraint so that the back of your head is supported at eye level by the center of the head restraint.

Observe the safety guidelines on (▷ page 75).

▶ Check whether steering wheel ① is adjusted properly.

Adjusting the steering wheel electrically (▷ page 82).

When adjusting the steering wheel, make sure:

- you can hold the steering wheel with your arms slightly bent.
- you can move your legs freely.
- you can see all the displays in the instrument cluster clearly.

Observe the safety guidelines on (▷ page 41).

▶ Check whether you have fastened seat belt ② properly (▷ page 43).

The seat belt should:

- fit snugly across your body
- be routed across the middle of your shoulder
- be routed in your pelvic area across the hip joints

▶ Before starting off, adjust the rear-view mirror and the exterior mirrors (▷ page 84) in such a way that you have a good view of road and traffic conditions.

▶ **Vehicles with a memory function:** save the seat, steering wheel and exterior mirror settings (▷ page 85).

Seats

Important safety notes

⚠ **WARNING**

In order to avoid possible loss of vehicle control, all seat, head restraint, steering wheel and rear view mirror adjustments, as well as fastening of seat belts, must be done before setting the vehicle in motion.

⚠ **WARNING**

Do not adjust the driver's seat while driving. Adjusting the seat while driving could cause the driver to lose control of the vehicle.

Never travel in a moving vehicle with the seat backrest in an excessively reclined position as this can be dangerous. You could slide under the seat belt in a collision. If you slide under it, the seat belt would apply force at the abdomen or neck. This could cause serious or fatal injuries. The seat backrest and seat belts provide the best restraint when the wearer is in a position that is as upright as possible and seat belts are properly positioned on the body.

⚠ **WARNING**

Your seat belt must be adjusted so that you can correctly fasten your seat belt.

Observe the following points:

- adjust the seat backrest until your arms are slightly angled when holding the steering wheel.
- adjust the seat to a comfortable seating position that still allows you to reach the accelerator/brake pedal safely. The position should be as far back as possible with the driver still able to operate the controls properly.
- adjust the head restraint so that it is as close to the head as possible and the center of the head restraint supports the back of the head at eye level.
- never place hands under the seat or near any moving parts while a seat is being adjusted.

Failure to do so could result in an accident and/or serious personal injury.

⚠ **WARNING**

The electrically adjustable seats can be operated at any time. Therefore, do not leave children unattended in the vehicle, or with access to an unlocked vehicle. A child's unsupervised access to a vehicle could result in an accident and/or serious personal injury.

⚠ **WARNING**

According to accident statistics, children are safer when properly restrained on the rear seats than on the front-passenger seat. Thus, we strongly recommend that children be placed in the rear seat whenever possible. Regardless of seating position, children 12 years old and under must be seated and properly secured in an appropriately sized child restraint system or booster seat recommended for the size and weight of the child. For additional information, see the "Children in the vehicle" section.

A child's risk of serious or fatal injuries is significantly increased if the child restraints are not properly secured in the vehicle and/or the child is not properly secured in the child restraint.

⚠ **WARNING**

For your protection, drive only with properly positioned head restraints.

Adjust the head restraint so that it is as close to the head as possible and the center of the head restraint supports the back of the head at eye level. This will reduce the potential for injury to the head and neck in the event of an accident or similar situation.

▷▷

Do not drive the vehicle without the seat head restraints. Head restraints are intended to help reduce injuries during an accident.

! To avoid damage to the seats and the seat heating, observe the following information:

- do not spill any liquids on the seats. If liquid is spilled on the seats, dry them as soon as possible.
- if the seat covers are damp or wet, do not switch on the seat heating. The seat heating should also not to be used to dry the seats.
- clean the seat covers as recommended; see the "Interior care" section.
- do not transport heavy loads on the seats. Do not place sharp objects on the seat cushions, e.g. knives, nails or tools. The seats should only be occupied by passengers, if possible.
- when the seat heating is in operation, do not cover the seats with insulating materials, e.g. blankets, coats, bags, seat covers, child seats or booster seats.

! Make sure that there are no objects in the footwell or behind the seats when resetting the seats. There is a risk that the seats and/or the objects could be damaged.

! When the rear bench seat is folded forwards, the front seats cannot be moved to their rearmost position. You could otherwise damage the seats and the rear bench seat.

! Make sure that the sun visor is folded up before adjusting the backrest and head restraint height. The head restraint and sun visor could otherwise collide when the head restraint is fully extended.

i If the front door is open, the seats can be adjusted for up 30 minutes after the ignition has been switched off.

i The head restraints in the front and rear seats can be removed (▷ page 78).

Please contact an authorized Mercedes-Benz Center for more information.

i You can find further information about enlarging the cargo compartment (folding the rear bench seat forwards) on (▷ page 190).

Adjusting the seats electrically

General notes

The buttons are located on the door control panel.

① Head restraint height
② Backrest angle
③ Seat fore-and-aft adjustment
④ Seat cushion angle
⑤ Seat height

▶ Turn the SmartKey to position **1** or **2** in the ignition lock.

Seat fore-and-aft adjustment

! Before moving the front passenger seat forward, make sure that the cup holder on the center console is folded down and that the cup holder on the armrest has been removed. Otherwise, the front passenger seat or the cup holders may be damaged.

▶ Slide the button forwards or back in the direction of arrow ③.

Backrest angle

▶ Slide the button forwards or back in the direction of arrow ②.

Seat height

▶ Slide the button up or down in the direction of arrow ⑤.

Seat cushion angle

Adjust the seat cushion angle so that your thighs are lightly supported.

▶ Slide the button up or down in the direction of arrow ④.

Head restraint height

▶ Slide the button up or down in the direction of arrow ①.

ℹ For further information on head restraints, see (▷ page 77).

ℹ You can store the seat settings using the memory function (▷ page 85).

Adjusting the head restraints

Important safety notes

⚠ **WARNING**

For safety reasons, always drive with the rear head restraints in the upright position when the rear seats are occupied.

Keep the area around head restraints clear of articles (e.g. clothing) to not obstruct the folding operation of the head restraints.

⚠ **WARNING**

For your protection, drive only with properly positioned head restraints.

Adjust the head restraint so that it is as close to the head as possible and the center of the head restraint supports the back of the head at eye level. This will reduce the potential for injury to the head and neck in the event of an accident or similar situation.

Do not drive the vehicle without the seat head restraints. Head restraints are intended to help reduce injuries during an accident.

Adjusting the front seat head restraint height

The button is located on the door control panel.

▶ Slide head restraint adjustment button ① up or down in the direction of the arrow.

Adjusting the front seat head restraint angle

⚠ **WARNING**

Vehicles with Rear Seat Entertainment System: When adjusting the head restraint, make sure your fingers do not become caught between the head restraint cushion and the monitor. Failing to do so may lead to injury.

▶ Push or pull the lower edge of the head restraint in the direction of the arrow.

Resetting the front seat head restraints

It is necessary to reset the front seat head restraints after the voltage supply has been interrupted, e.g. if the battery has been completely discharged or disconnected.

▶ Make sure that the cup holder on the center console is folded down (▷ page 193).

▶ Move the seat as far forward as possible and the head restraint in as far as possible.

Rear seat head restraints

Important safety notes

⚠ **WARNING**

For safety reasons, always drive with the rear head restraints in the upright position when the rear seats are occupied.

Keep the area around head restraints clear of articles (e.g. clothing) to not obstruct the folding operation of the head restraints.

⚠ **WARNING**

For your protection, drive only with properly positioned head restraints.

Adjust the head restraint in such a way that it is as close to the head as possible and the center of the head restraint supports the back of the head at eye level. This will reduce the potential for injury to the head and neck in the event of an accident or similar situation.

With a rear seat occupied, make sure to move the respective head restraint up from the lowest non-use position and have the occupant adjust the head restraint properly.

Do not drive the vehicle without the seat head restraints installed when the rear seats are occupied. Head restraints are intended to help reduce injuries during an accident.

⚠ **WARNING**

Make sure the rear seat head restraints engage when placing them upright manually. Otherwise their protective function cannot be ensured.

The back of the head will not be supported in the event of a collision. That could cause serious or even fatal injuries. Rear seat occupants can be seriously injured or killed.

Adjusting the rear seat head restraint height

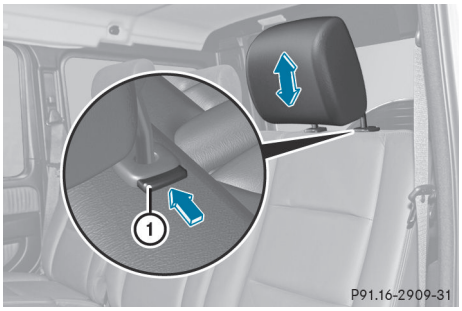

▶ If the head restraint is fully lowered, it is necessary to press release catch ①.

▶ **To raise:** pull the head restraint up to the desired position.

▶ **To lower:** press release catch ① and push the head restraint down until it is in the desired position.

Adjusting the rear seat head restraint angle

The angle of the rear head restraints is adjusted in the same way as for the front head restraints (▷ page 77).

Installing/removing the rear seat head restraints

▶ **To remove:** pull the head restraint up to the stop.

▶ Press release catch ① and pull the head restraint out of the guides.

▶ **To re-install:** place the head restraint in the guides of the backrest.

ℹ The notches on the guide rod must be on the left-hand side when viewed in the direction of travel.

▶ Push the head restraint down until you hear it engage in position.

Adjusting the luxury head restraints

⚠ **WARNING**

When folding back the head restraint side bolsters, do not put your hands between the side bolster and the cushion holder. There is a danger of becoming trapped.

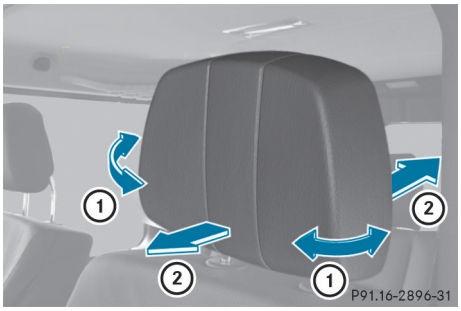

▶ **To adjust the side bolsters of the head restraint:** push or pull right and/or left-hand side bolster ① into the desired position.

▶ **To adjust the angle of the head restraint:** push or pull the head restraint in the direction of arrow ②.

Adjusting the multicontour seat

You can adjust the contour of the front seats individually so as to provide optimum support for your back and sides.

▶ Make sure that the SmartKey is in position **1** in the ignition lock.

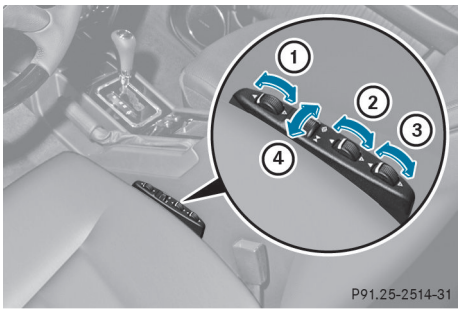

① To adjust the thigh cushion

② To adjust the backrest contour in the lumbar region

③ To adjust the backrest contour in the upper back region

④ To adjust the side bolsters of the seat backrest

Adjusting the four-way lumbar support

You can adjust the contour of the front seat backrests individually to provide optimum support for your back.

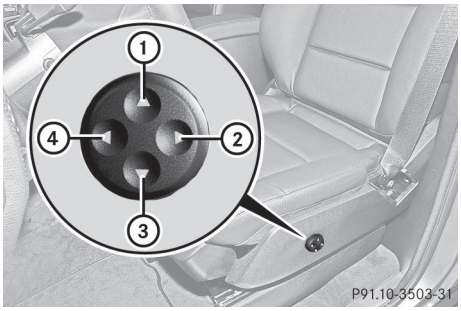

① To raise the backrest contour

② To soften the backrest contour

③ To lower the backrest contour

④ To harden the backrest contour

Switching the seat heating on/off

General notes

The red indicator lamps in the button indicate the heating level you have selected.

ℹ If the battery voltage is too low, the seat heating may switch off.

One or more of the indicator lamps in the seat heating button are flashing.

▶ Make sure that the SmartKey is in position **2** in the ignition lock.

Front-seat heating

ℹ The system automatically switches down from level **3** to level **2** after approximately five minutes.

The system automatically switches down from level **2** to level **1** after approximately ten minutes.

The system automatically switches off approximately 20 minutes after it is set to level **1**.

▶ **To switch on:** press button ① repeatedly until the desired heating level is set.

▶ **To switch off:** press button ① repeatedly until all the indicator lamps go out.

Rear-seat heating

① Level **1** (normal heating)

② Level **2** (rapid heating)

ℹ The system automatically switches down from level **2** (rapid heating) to level **1** (normal heating) after approximately five minutes.

The system automatically switches off approximately 30 minutes after it is set to level **1**.

▶ **To select level 1:** press the upper section of button ①.
An indicator lamp lights up.

▶ **To deactivate level 1:** press the upper section of button ①.
The indicator lamp goes out.

▶ **To select level 2:** press the lower section of button ②.
Both indicator lamps light up.

▶ **To deactivate level 2:** press the lower section of button ②.
Both indicator lamps go out.

Problems with the seat heating

If one or all of the indicator lamps in the seat heating button are flashing, the seat heating has switched off automatically. The vehicle's electrical system voltage is too low because too many electrical consumers are switched on.

▶ Switch off electrical consumers which you do not need, such as the rear window defroster or interior lighting.
Once the battery is sufficiently charged, the seat heating will switch back on automatically.

Switching the seat ventilation on/off

Switching on/off

Seat ventilation is only available for the front seats.

The three blue indicator lamps in the buttons indicate the ventilation level you have selected.

ℹ If the battery voltage is too low, the seat ventilation may switch off.

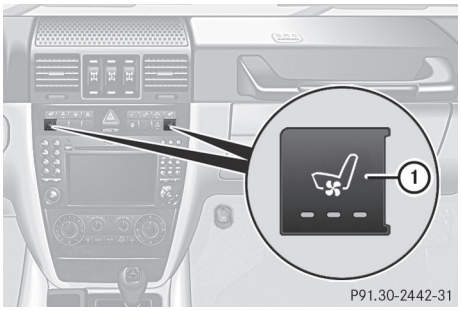

▶ Make sure that the SmartKey is in position **2** in the ignition lock.

▶ **To switch on:** press button ① repeatedly until the desired ventilation level is set.

ℹ If you open the side windows and the sliding sunroof using the SmartKey (▷ page 69), the driver's seat ventilation automatically switches to the highest level.

▶ **To switch off:** press button ① repeatedly until all the indicator lamps go out.

Problems with the seat ventilation

If one or all of the indicator lamps in the seat ventilation button are flashing, the seat ventilation has switched off automatically. The vehicle's electrical system voltage is too low because too many electrical consumers are switched on.

▶ Switch off electrical consumers that you do not need, such as the rear window defroster or interior lighting.
Once the battery is sufficiently charged, the seat ventilation will switch back on automatically.

Steering wheel

Important safety notes

You can adjust the steering wheel electrically.

⚠ **WARNING**

Do not adjust the steering wheel while driving. Adjusting the steering wheel while driving could cause the driver to lose control of the vehicle.

The electrical steering wheel adjustment feature can be operated at any time. Therefore, do not leave children unattended in the vehicle, or with access to an unlocked vehicle. A child's unsupervised access to a vehicle could result in an accident and/or serious personal injury.

When you adjust the steering wheel, make sure that:

- the steering wheel can be reached with your arms slightly bent.
- you can move your legs freely.
- you can see all the displays in the instrument cluster clearly.

Adjusting the steering wheel

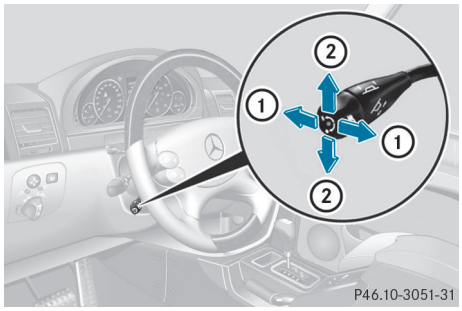

① To adjust the steering wheel position (fore-and-aft adjustment)

② To adjust the steering wheel height

▶ Make sure that the SmartKey is in position **1** or **2** in the ignition lock.

ℹ If the driver's door is open, the steering wheel can be adjusted for up to 30 minutes after the ignition has been switched off.

▶ Press the lever in the direction of arrow ① or ② until the steering wheel is in the desired position.

You can find more information under:

- EASY-ENTRY/EXIT feature (▷ page 83)
- Storing settings (▷ page 85)

Steering wheel heating

Switching on/off

The steering-wheel heating heats the leather areas of the steering wheel.

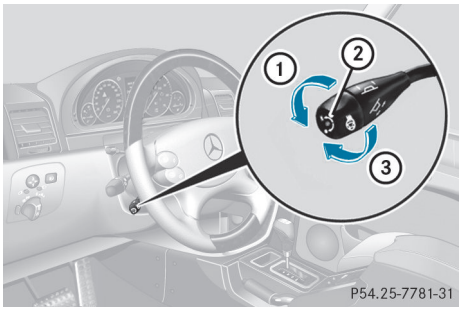

① To switch on the steering-wheel heating

② Indicator lamp

③ To switch off the steering-wheel heating

▶ **To switch on/off:** make sure that the SmartKey is in position **1** or **2** in the ignition lock.

▶ Turn the lever in the direction of arrow ① or ③.
Indicator lamp ② lights up or goes out.

ℹ The steering wheel heating does not switch off automatically.

ℹ The steering wheel heating may switch off temporarily if:

- the temperature of the vehicle interior is above 86 °F (30 °C).
- the temperature of the steering wheel is above 95 °F (35 °C).

Indicator lamp ② remains on.

ℹ The steering wheel heating is deactivated if you remove the SmartKey from the ignition lock.

Problems with the steering wheel heating

If steering wheel heating indicator lamp ② is flashing, the steering wheel heating has switched off automatically. The vehicle's electrical system voltage is too low because too many electrical consumers are switched on.

▶ Switch off electrical consumers which you do not need, such as the rear window defroster or interior lighting.
Once the battery is sufficiently charged, the steering wheel heating will switch back on automatically.

Steering wheel EASY-ENTRY/EXIT feature

General notes

The EASY-ENTRY/EXIT feature makes getting in and out of your vehicle easier.

You can activate and deactivate the EASY-ENTRY/EXIT feature in the on-board computer (▷ page 161).

Important safety notes

⚠ **WARNING**

You must make sure no one can become trapped or injured by the moving steering wheel when the EASY-ENTRY/EXIT feature is activated.

To stop steering maneuver do one of the following:

- press the steering column adjustment switch.
- press one of the memory function position buttons.
- press the memory button.

Do not leave children unattended in the vehicle, or with access to an unlocked vehicle. Children could open the driver's door and unintentionally activate the EASY-ENTRY/EXIT feature. This could result in an accident and/or serious personal injury.

⚠ **WARNING**

Let the system complete the adjustment procedure before setting the vehicle in motion. All steering wheel adjustment must be completed before setting the vehicle in motion. Driving off with the steering wheel still adjusting could cause the driver to lose control of the vehicle.

! Do not activate the EASY-ENTRY/EXIT feature, if the seat backrest is reclined too far backwards. This can damage the front or rear seats. You must first move the backrest to a vertical position.

Position of the steering wheel when the EASY-ENTRY/EXIT feature is active

The steering wheel moves upwards and towards the dashboard if:

- you remove the SmartKey from the ignition lock or
- you open the driver's door with the SmartKey in position **0** or **1** in the ignition lock.

ℹ The steering wheel only moves upwards and towards the dashboard if it has not already reached the upper end stop.

Position of the steering wheel for driving

The steering wheel is moved to the last selected position when:

- the driver's door is closed.
- you insert the SmartKey into the ignition lock

The last position of the steering wheel is stored when you switch off the ignition or when you store the setting with the memory function (▷ page 85).

Mirrors

Rear-view mirror

▶ Adjust the rear-view mirror by hand so you have a good overview of the traffic conditions.

Exterior mirrors

Important safety notes

⚠ **WARNING**

Exercise care when using the passenger-side exterior rear view mirror. The mirror surface is convex (outwardly curved surface for a wider field of view). Objects in mirror are closer than they appear. Check your interior rear view mirror and glance over your shoulder before changing lanes.

At low outside temperatures, the exterior mirrors are heated automatically.

Adjusting the exterior mirrors

The switches are located on the dashboard on the left-hand side.

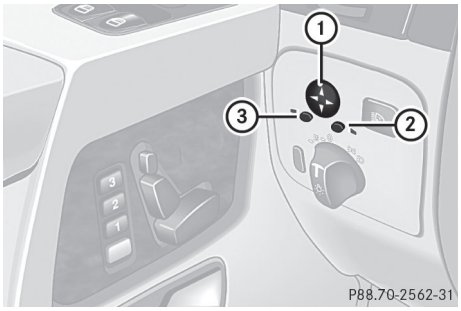

▶ Make sure that the SmartKey is in position **1** or **2** in the ignition lock.

▶ Press button ② for the right-hand exterior mirror or button ③ for the left-hand exterior mirror.

▶ Press adjustment button ① up, down, to the right or to the left until the exterior mirror is set to a position that provides you with a good overview of traffic conditions.

You will find further information in the "Storing settings" section (▷ page 85).

Exterior mirror out of position

If an exterior mirror has been pushed out of position, proceed as follows:

▶ Move the exterior mirror into the correct position manually.
The mirror housing is engaged again and you can adjust the exterior mirrors as usual (▷ page 84).

Automatic anti-glare mirrors

⚠ **WARNING**

The auto-dimming function does not react if incoming light is not aimed directly at sensors in the interior rear view mirror.

The interior rear view mirror and the exterior rear view mirror on the driver's side do not react, for example, when transporting cargo which covers the rear window.

Light hitting the mirror(s) at certain angles (incident light) could blind you. As a result, you may not be able to observe traffic conditions and could cause an accident.

The rear-view mirror and the exterior mirror on the driver's side automatically go into anti-glare mode if the ignition is switched on and incident light from headlamps strikes the sensor in the rear-view mirror.

The mirrors do not go into anti-glare mode if reverse gear is engaged or the interior lighting is switched on.

Parking position for the exterior mirror on the front-passenger side

General notes

To make it easier to park, you can store the front-passenger side exterior mirror position in such a way that you can see the rear wheel on that side as soon as you engage reverse gear **R**.

Using the memory buttons on the driver's side, you can store three parking positions per key.

Setting and storing the parking position

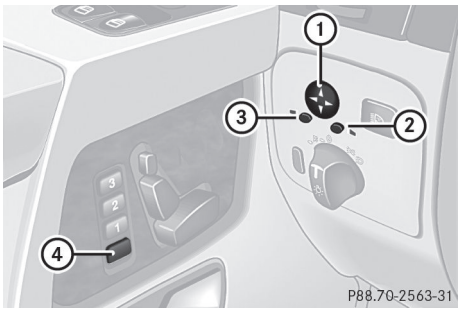

① Adjustment button
② Right-hand exterior mirror
③ Left-hand exterior mirror
④ Memory button

▶ Make sure that the vehicle is stationary and that the SmartKey is in position **1 or 2** in the ignition lock.

▶ Press button ② for the exterior mirror on the front-passenger side.

▶ Engage reverse gear **R**.
The exterior mirror on the front-passenger side moves to the preset parking position.

▶ Use adjustment button ① to adjust the exterior mirror to a position which allows you to see the rear wheel and the curb.

▶ Press memory button ④ and adjustment button ① within three seconds.
The parking position is stored if the exterior mirror does not move.

ⓘ If the mirror moves out of position, repeat the steps.

ⓘ If you shift the transmission to another position, the exterior mirror on the front-passenger side returns to the driving position.

Calling up a stored parking position setting

▶ With the SmartKey in position **2** in the ignition lock and the exterior mirror on the front-passenger side activated, engage reverse gear.
The exterior mirror on the front-passenger side moves to the stored parking position.

The exterior mirror on the front-passenger side moves back to its original position:

- as soon as you exceed a speed of 10 km/h
- about ten seconds after you have disengaged reverse gear **R**
- if you press button ③ for the exterior mirror on the driver's side

Memory functions

Storing settings

With the memory function, you can store up to three different settings, e.g. for three different people.

The following settings are stored as a single memory preset:

- position of the seat, backrest and head restraint
- driver's side: steering wheel position
- driver's side: position of the exterior mirrors on the driver's and front-passenger sides

⚠ **WARNING**
Do not activate the memory function while driving. Activating the memory function while driving could cause the driver to lose control of the vehicle.

The buttons are located on the door control panel.

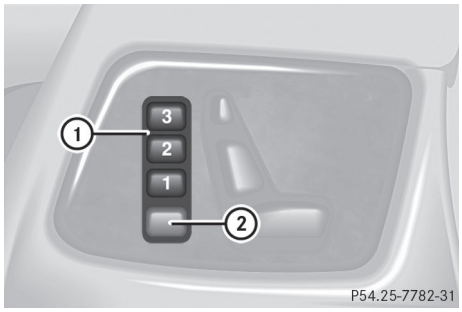

- Make sure that the SmartKey is in position **2** or that the respective door is open.
- Adjust the seat (▷ page 76) and head restraint (▷ page 77).
- On the driver's side, adjust the steering wheel (▷ page 82) and the exterior mirrors (▷ page 84).
- Press memory button ②.
- Press one of memory buttons ① **1**, **2** or **3** within three seconds.
  The settings are stored in the selected storage position.

Calling up a stored setting

- Press and hold the relevant memory button **1**, **2** or **3**, until the seat, head restraints, steering wheel and mirrors are in the stored position.

ⓘ The setting procedure is interrupted as soon as you release the memory button.

! If you want to move the seat from the fully reclined position to a stored seat position, first raise the backrest using the seat switch. The seat could otherwise be damaged.

Useful information 88
Exterior lighting 88
Interior lighting 92
Replacing bulbs 94
Windshield wipers 99

Useful information

ℹ This Operator's Manual describes all models and all standard and optional equipment of your vehicle available at the time of publication of the Operator's Manual. Country-specific differences are possible. Please note that your vehicle may not be equipped with all features described. This also applies to safety-related systems and functions.

ℹ Please read the information on qualified specialist workshops (▷ page 20).

Exterior lighting

Important safety notes

For reasons of safety, Mercedes-Benz recommends that you drive with the lights switched on even during the daytime. In some countries, operation of the headlamps varies due to legal requirements and self-imposed obligations. In these countries, the daytime running lamps are automatically switched on when the engine is started.

Information about driving abroad

To convert to symmetrical low beam when driving abroad: switch the headlamps to symmetrical low beam in countries in which traffic drives on the opposite side of the road from the country where the vehicle is registered. This prevents glare to oncoming traffic. Symmetrical lights do not illuminate as large an area of the edge of the road.

Have the headlamps converted at a qualified specialist workshop as close to the border as possible before driving in these countries.

To convert to asymmetrical low beam after returning: have the headlamps converted back to asymmetrical low beam at a qualified specialist workshop as soon as possible after crossing the border and returning to the original country.

Light switch

Operation

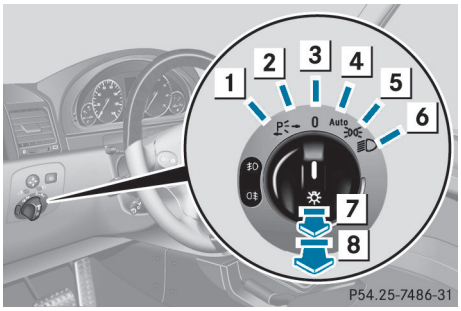

1 ←P Left-hand standing lamps
2 P→ Right-hand standing lamps
3 0 Lights off/daytime running lamps
4 AUTO Automatic headlamp mode/daytime running lamps
5 Parking lamps, side marker lamps, license plate and instrument cluster lighting
6 Low-beam/high-beam headlamps
7 Front fog lamps
8 Rear fog lamp

The turn signals, high-beam headlamps and the high-beam flasher are operated using the combination switch (▷ page 91).

! Switch off the standing lamps, parking lamps and low-beam headlamps when you leave the vehicle. This prevents the battery from discharging.

The exterior lighting (except the parking lamps) switches off automatically if you:

- remove the SmartKey from the ignition lock
- open the driver's door with the SmartKey in position **0**

If you hear a warning tone when you leave the vehicle, the lights may still be switched on. The `Switch off lights` message appears in the multifunction display.

▶ Turn the light switch to 0 or AUTO.

▶ If you see the `Switch off lights or remove key` message in the multifunction

display, remove the SmartKey from the ignition lock.

or

▶ Turn the light switch to 0 or AUTO.

Low-beam headlamps

▶ **To switch on:** turn the SmartKey to position **2** in the ignition lock or start the engine.

▶ Turn the light switch to ≣D.
The ≣D indicator lamp in the instrument cluster lights up.

▶ **To switch off:** turn the light switch to 0.

Daytime running lamps

Daytime running lamps in Canada

The "daytime running lamps" function is required by law in Canada. It cannot therefore be deactivated.

▶ Turn the light switch to 0 or AUTO.
When the engine is running: depending on the ambient light, the low-beam headlamps or the parking lamps are switched on.
When the low-beam headlamps are switched on, the ≣D indicator lamp in the instrument cluster lights up.

If the light switch is set to 0 or AUTO, you cannot activate the high-beam headlamps. However, the high-beam flasher can always be used. Turn the light switch to ≣D when driving at night. You can switch on the high-beam headlamps in this position.

When the engine is running and the vehicle is stationary: if you move the selector lever from a driving position to **N** or **P**, the low-beam headlamps go out after three minutes.

When the engine is running: if you turn the light switch to ≣DC, you turn on the parking lamps and low-beam headlamps.

When the engine is running: if you turn the light switch to ≣D, the manual settings take precedence over the daytime running lamps.

Daytime running lamps in the USA

In the USA, the daytime running lamps are deactivated upon delivery from the factory.

▶ **To switch on:** activate the daytime running lamps function in the on-board computer (▷ page 160).

▶ Turn the light switch to 0 or AUTO.
When the engine is on: the low-beam headlamps are switched on. The ≣D indicator lamp in the instrument cluster lights up.

If the light switch is set to 0 or AUTO, you cannot switch on the high-beam headlamps in bright conditions. Turn the light switch to ≣D. You can switch on the high-beam headlamps in this position.

If the light switch is set to 0, AUTO or ≣D, you can switch on the high-beam headlamps in less bright conditions.

However, the high-beam flasher can always be used.

Turn the light switch to ≣D when driving at night.

When the engine is running: if you turn the light switch to ≣DC or ≣D, the manual settings take precedence over the daytime running lamps.

Automatic headlamp mode

⚠ **WARNING**

If the exterior lamp switch is set to AUTO, the headlamps will not automatically come on under foggy conditions.

To minimize risk to you and to others, activate headlamps by turning exterior lamp switch to ≣D when traffic and/or ambient lighting conditions require you to do so.

In low ambient lighting conditions, only switch from position AUTO to ≣D with the vehicle at a standstill in a safe location. Switching from AUTO to ≣D will briefly switch off the headlamps. Doing so while driving in low ambient lighting conditions may result in an accident.

▷▷

The automatic headlamp feature is only an aid to the driver. The driver is responsible for the operation of the vehicle's lights at all times.

The parking lamps, low-beam headlamps and license plate lamp are switched on or off automatically, depending on the brightness of the ambient light.

▶ **To switch on:** turn the light switch to AUTO.
SmartKey in position **1** in the ignition lock: the parking lamps are switched on or off automatically depending on the brightness of the ambient light.
When the engine is running: depending on the ambient light, the parking lamps, the low-beam headlamps and the license plate lamp are switched on or off automatically.
When the low-beam headlamps are switched on, the indicator lamp in the instrument cluster lights up.

Canada only: if the light switch is in position 0 or AUTO, you cannot switch on the high-beam headlamps. However, the high-beam flasher can always be used. Turn the light switch to when driving at night. You can switch on the high-beam headlamps in this position.

Front fog lamps and rear fog lamp

Front fog lamps

⚠ **WARNING**
If you suspect that driving conditions will be foggy, turn the light switch to before you start your journey. Your vehicle may otherwise not be visible and you could endanger yourself and others.

⚠ **WARNING**
In low ambient lighting or foggy conditions, only switch from position AUTO to with the vehicle at a standstill in a safe location.
Switching from AUTO to will briefly switch off the headlamps. Doing so while driving in low ambient lighting conditions may result in an accident.

▶ **To switch on:** turn the SmartKey to position **2** in the ignition lock or start the engine.
▶ Turn the light switch to or . If the light switch is set to AUTO, you cannot switch on the fog lamps.
▶ Pull the light switch out to the first detent.
The green indicator lamp on the light switch lights up.
▶ **To switch off:** press the light switch in as far as it will go.
The green indicator lamp on the light switch goes out.

Rear fog lamp

▶ **To switch on:** turn the SmartKey to position **2** in the ignition lock or start the engine.
▶ Turn the light switch to or . If the light switch is set to AUTO, you cannot switch on the rear fog lamp.
▶ Pull the light switch out to the second detent.
The yellow indicator lamp on the light switch lights up.
▶ **To switch off:** press the light switch in as far as it will go.
The yellow indicator lamp on the light switch goes out.

Combination switch

Turn signals

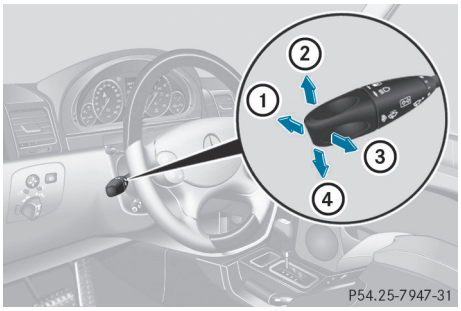

- **To indicate briefly:** press the combination switch briefly to the pressure point in the direction of arrow ② or ④.

  The corresponding turn signal flashes three times.
- **To indicate:** press the combination switch beyond the pressure point in the direction of arrow ② or ④.

  The corresponding ⇨ or ⇦ indicator lamp in the instrument cluster flashes.

High-beam headlamps

- **To switch on:** turn the SmartKey to position **2** in the ignition lock or start the engine.
- Turn the light switch to ≡D or AUTO.
- Press the combination switch beyond the pressure point in the direction of arrow ①.

  In the AUTO position, the high-beam headlamps are only switched on when it is dark.
- **To deactivate:** move the combination switch back to its normal position.

  The ≡D indicator lamp in the instrument cluster goes out.

High-beam flasher

- **To switch on:** turn the SmartKey in the ignition lock to position **1** or **2** or start the engine.
- Pull the combination switch briefly in the direction of arrow ③.

  The ≡D indicator lamp in the instrument cluster lights up briefly.

Hazard warning lamps

The hazard warning lamps switch on automatically if an air bag or the Emergency Tensioning Devices are triggered and the SmartKey is in position **1** in the ignition lock.

- **To switch on:** press button ①.

  All turn signals flash. If you now switch on a turn signal using the combination switch, only the turn signal lamp on the corresponding side of the vehicle will flash.
- **To switch off:** press button ①.

ℹ The hazard warning lamps still operate if the ignition is switched off.

Headlamp cleaning system

The headlamps are cleaned automatically if the "Wipe with washer fluid" function is operated fifteen times while the lights are on and the engine is running (▷ page 100). When you switch off the ignition, the automatic headlamp cleaning system is reset and counting is resumed from 0.

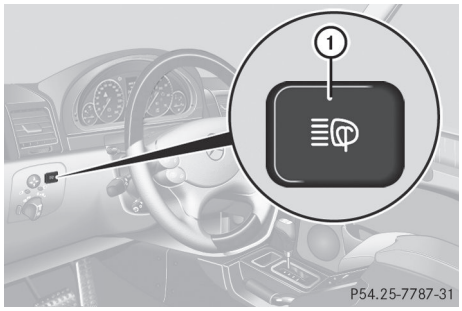

- **To switch on manually:** turn the SmartKey to position **2** in the ignition lock or start the engine.
- Briefly press button ① of the headlamp cleaning system.
  The headlamps are cleaned with a high-pressure water jet.

Cornering light function

The cornering light function improves the illumination of the road over a wide angle in the direction you are turning, enabling better visibility in tight bends, for example. It can only be activated if the low-beam headlamps are switched on and the fog lamp is switched off.

Active: if you are driving at speeds below 25 mph(40 km/h) and switch on the turn signals and turn the steering wheel.

Not active: if you are driving at speeds above 25 mph(40 km/h) or switch off the turn signal and turn the steering wheel to the straight-ahead position.

The cornering lamp may remain lit for a short time.

Headlamps and indicator lamps fogged up on the inside

The headlamps and the indicator lamps in the exterior mirrors may fog up on the inside if there is high atmospheric humidity.

- Drive with the headlamps switched on. The level of moisture diminishes, depending on the length of the journey and the weather conditions (humidity and temperature).

If the level of moisture does not diminish:

- Have the headlamps checked at a qualified specialist workshop.

Interior lighting

Overview of interior lighting

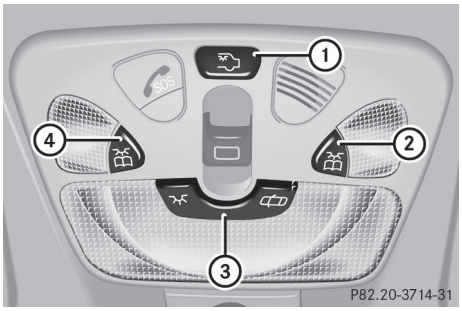

Front overhead control panel

① To switch the cargo compartment lamp/rear interior lighting on/off

② Switches the right-hand reading lamp on/off

③ Rocker switch (to control the interior lighting)

④ Switches the left-hand reading lamp on/off

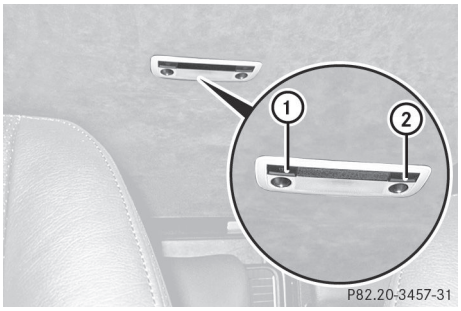

Rear-compartment overhead control panel

① Switches the right-hand reading lamp on/off

② Switches the left-hand reading lamp on/off

Interior lighting control

Important notes

In order to prevent the vehicle's battery from discharging, the interior lighting functions are automatically deactivated after some time unless the SmartKey is in position **2** in the ignition lock.

Automatic interior lighting control

▶ **To switch on:** set rocker switch ③ to the center position.

The interior lighting switches on automatically when it is dark if you:

- unlock the vehicle
- open a door
- remove the SmartKey from the ignition lock

The interior light is activated for a short while when the SmartKey is removed from the ignition lock. You can activate this delayed switch-off using the on-board computer (▷ page 161).

When a front door is opened, the front interior lighting comes on. When a rear door is opened, the rear interior lighting comes on. In addition, the courtesy lights come on.

ℹ If a door remains open and the SmartKey is not in the ignition lock, the interior lighting switches off after a short while.

▶ **To switch off:** press the symbol on rocker switch ③.

The interior lighting remains switched off even when it is dark if you:

- unlock the vehicle
- open a door
- remove the SmartKey from the ignition lock

Manual control

Front interior lighting

! If the interior lighting has been switched on manually, it will not be switched off automatically.

This can cause the starter battery to discharge.

Make sure that the interior lighting does not remain switched on too long after the engine has been switched off.

▶ **To switch on:** press the symbol on rocker switch ③.

▶ **To switch off:** set rocker switch ③ to the center position.

Reading lamps

▶ **To switch on/off:** press the button.

Cargo compartment lamp

⚠ **WARNING**

To prevent possible personal injury, always keep hands and fingers away from the cargo compartment opening when closing the tailgate. Be especially careful when small children are around.

⚠ **WARNING**

Make sure the tailgate is closed when the engine is running and while driving. Among other dangers, deadly carbon monoxide (CO) gases may enter vehicle interior resulting in unconsciousness and death.

! Switch off the cargo compartment lamp if you wish to leave the rear door open for a longer period. The battery may otherwise discharge.

▶ **To switch on/off:** press the button.

ⓘ If you open the rear door, the cargo compartment lamp comes on. Then, you cannot switch it off using the button.

Switch off the cargo compartment lamp if you wish to leave the rear door open for a longer period. This prevents the battery from discharging.

▶ Open the rear door.

▶ **To switch off with the rear door open:** press lock ① down in the direction of the arrow until it engages.
The cargo compartment lamp is switched off.

! Do not close the rear door while lock ① is engaged at the bottom. Otherwise, you could damage lock ①.

▶ **To switch on with the rear door open:** press lock cylinder ②.
The cargo compartment lamp resumes its normal function.

Rear interior lighting

▶ **To switch on/off:** press the button.

ⓘ The rear interior lighting switches on when you open a rear door. Then, you cannot switch it off using the button.

Switch off the rear interior lighting if you wish to leave the rear doors open for a longer period. This prevents the battery from discharging.

Replacing bulbs

Important safety notes

Xenon bulbs

⚠ **DANGER**

Xenon bulbs carry a high voltage. You could get an electric shock and be seriously or even fatally injured if you touch the electric contacts on Xenon bulbs. Therefore, never remove the cover from Xenon bulbs.

Do not change the Xenon bulbs yourself, but have them replaced at a qualified workshop.

Bulbs and lamps are an important aspect of vehicle safety. You must therefore make sure that these function correctly at all times. Have the headlamp setting checked regularly.

Other bulbs

⚠ **WARNING**

Bulbs and lamps can become very hot. For this reason, allow them to cool down before changing them. Otherwise, you could burn yourself when you touch them.

Keep bulbs out of the reach of children. Otherwise, they could, for example, damage the bulbs and injure themselves.

Never use a bulb which has been dropped. Such a bulb may explode and injure you.

Halogen bulbs are pressurized and could explode when you change them, especially if they are very hot. You should therefore wear eye protection and gloves when you are changing them.

There are bulbs other than the Xenon bulbs that you cannot replace. Replace only the bulbs listed (▷ page 95). Have the bulbs that

you cannot replace yourself changed at a qualified specialist workshop.

If you require assistance changing bulbs, consult a qualified specialist workshop.

Do not touch the glass tube of new bulbs with your bare hands. Even minor contamination can burn into the glass surface and reduce the service life of the bulbs. Always use a lint-free cloth or only touch the base of the bulb when installing.

Only use bulbs of the correct type.

If the new bulb still does not light up, consult a qualified specialist workshop.

Bulbs and lamps are an important aspect of vehicle safety. You must therefore make sure that these function correctly at all times. Have the headlamp setting checked regularly.

Before changing bulbs

Have the following bulbs changed at a qualified specialist workshop.

- additional turn signals in the exterior mirrors
- high-mounted brake lamp
- high-beam/low-beam headlamps (Xenon bulbs)
- parking lamp/standing lamp
- license plate lamp

ℹ Individual segments of the license plate lamp LEDs may fail without a display message appearing in the multifunction display. Check the license plate lamp regularly. Consult a qualified specialist workshop if necessary.

You can replace the following bulbs:

- fog lamp/cornering light with fog lamp function
- turn signal lamp (front)
- brake/tail lamp
- turn signal lamp (rear)
- tail lamp/standing lamp
- backup lamp
- rear fog lamp
- side marker lamp

Overview: changing bulbs/bulb types

Front bulbs

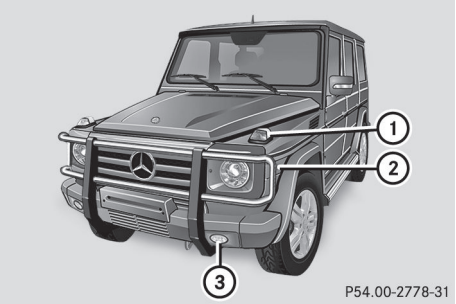

① Turn signal lamp: 1156 NA
② Side marker lamp: T 4 W
③ Cornering light function with fog lamp function: H11 55 W

Rear bulbs

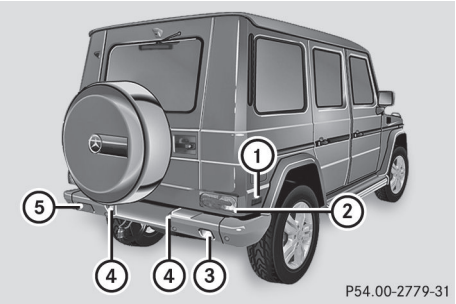

① Side marker lamp: T 4 W
② Tail lamps:
Turn signal lamp: PY 21 W
Brake lamp/tail lamp: P 21/5 W
Tail lamp/standing lamp: W 5 W
③ Backup lamp: P 21 W
④ License plate lamp: LEDs[3]
⑤ Rear fog lamp: P 21 W

[3] Have these bulbs changed at a qualified specialist workshop only.

Changing the front bulbs

Front fog lamps/cornering lamps with fog lamp function

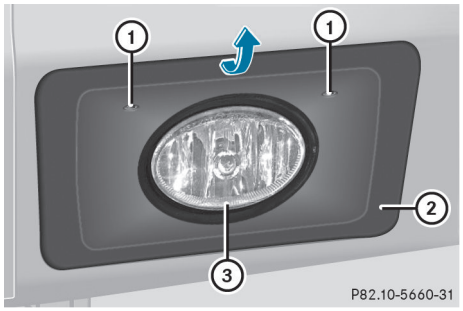

▶ Switch off the lights.

▶ Remove screws ①.

▶ Remove cover ②.

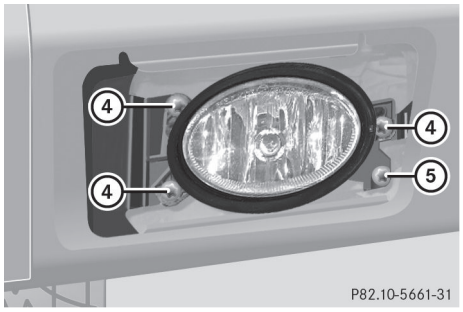

▶ Remove screws ④.

ℹ Only remove screws ④. Do not turn adjustment screw ⑤. If adjustment screw ⑤ is turned, the front fog lamp adjustment must be checked at a qualified specialist workshop.

▶ Remove headlamp ③.

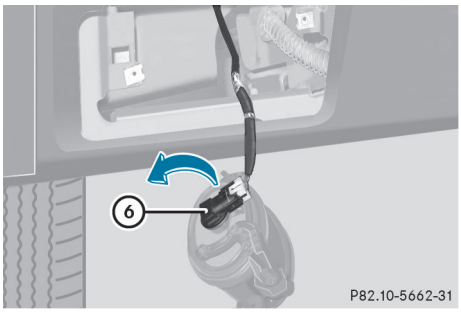

▶ Hold headlamp ③.

▶ Lightly press bulb holder ⑥, turn it counterclockwise to the stop and pull it out.

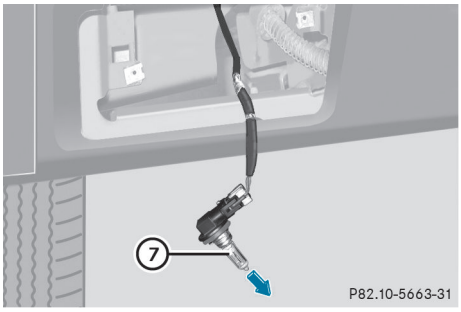

▶ Take bulb ⑦ out of bulb holder ⑥.

▶ Insert the new bulb into bulb holder ⑥.

▶ Insert bulb holder ⑥ into headlamp ③ and turn it clockwise to the stop.

▶ Insert headlamp ③.

▶ Replace and tighten screws ④.

▶ Position cover ②.

▶ Replace and tighten screws ①.

Turn signals

▶ Switch off the lights.

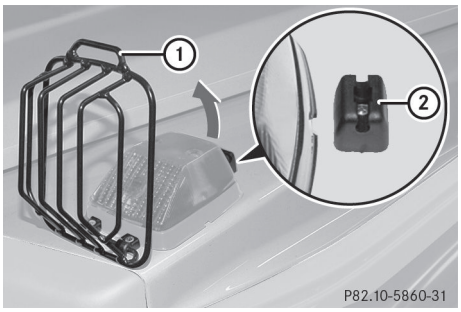

G 55 AMG: turn signal with protection grille

▶ **G 55 AMG:** pull protection grille ① out of bracket ② in the direction of the arrow.

▶ Fold up protection grille ①.

! Make sure that the protection grille does not strike against painted surfaces.

You could otherwise damage the paintwork.

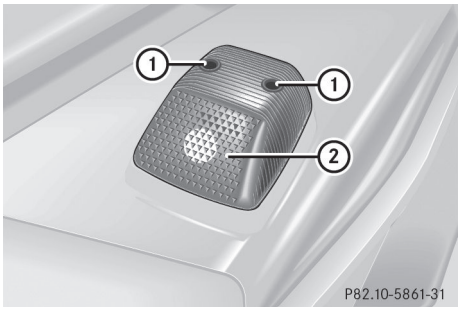

▶ Remove screws ①.

▶ Remove lens ②.

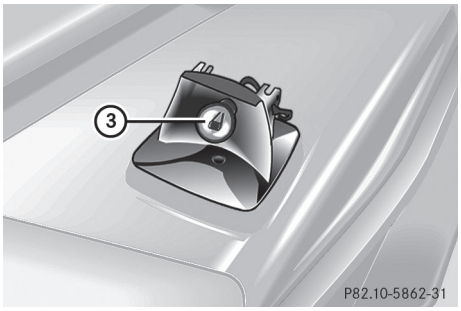

▶ Turn bulb ③ counterclockwise, applying slight pressure, and remove it from the bulb holder.

▶ Insert the new bulb into the bulb holder and turn it clockwise until it engages.

▶ Install lens ②.

▶ Replace and tighten screws ①.

! Do not fasten the screws too tightly. You could otherwise damage the lens.

▶ **G 55 AMG:** fold down protection grille ① and engage it in bracket ②.

Side marker lamps

The bulbs of the front and rear side marker lamps are changed in the same way.

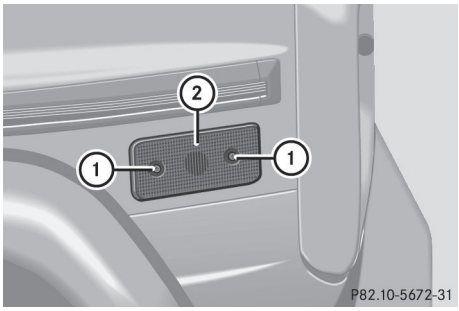

Front side marker lamp (example)

▶ Switch off the lights.

▶ Remove screws ①.

▶ Remove housing ②.

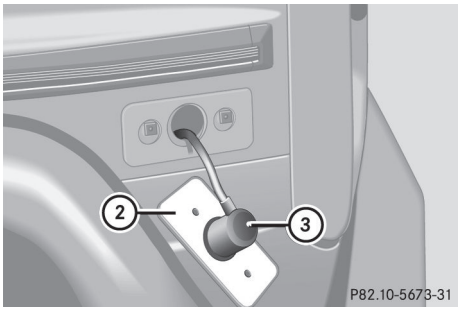

- Remove dust cover ③.
- Push the catch to the side and pull the bulb holder with the bulb out of housing ②.

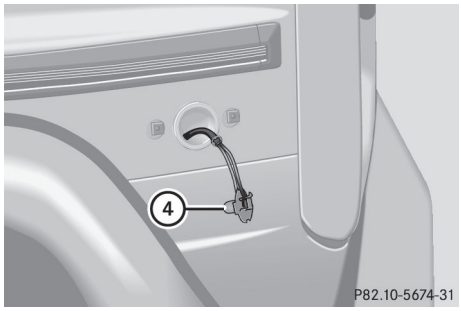

- Lightly press bulb ④, turn it counter-clockwise and pull it out.
- Insert the new bulb and, applying slight pressure, turn it clockwise until it engages.
- Insert the bulb holder into housing ②.
- Attach dust cover ③.
- Insert housing ②.
- Replace and tighten screws ①.

! Do not fasten the screws too tightly. You could otherwise damage the lens.

Changing the rear bulbs

Only G 55 AMG: headlamp protection grille

You must remove the protective grille before you can change the bulbs in the tail lamps.

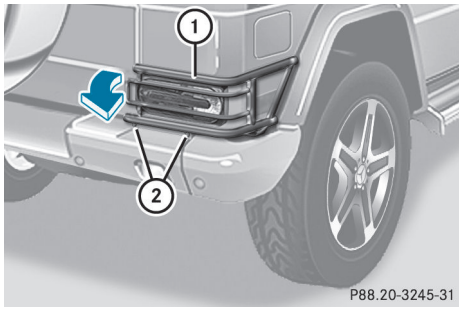

G 55 AMG: protective grille

- Unscrew screws ②.
- Swing protective grille ① to the right.

! Make sure that the protective grille does not hit any painted surfaces.

You could otherwise damage the paintwork.

- After changing the bulbs, swing protective grille ① to the left.
- Tighten screws ②.

Tail lamp

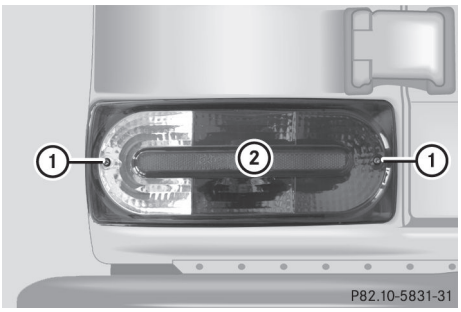

- Switch off the lights.
- Remove screws ①.
- Remove lens ②.

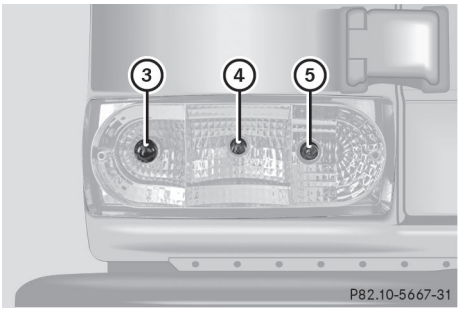

③ Turn signals
④ Brake/tail lamp
⑤ Tail lamp/standing lamp

- Turn the bulb counterclockwise, applying slight pressure, and remove it from bulb holder.
- Insert the new bulb into the bulb holder and turn it clockwise until it engages.

! When installing the lens, make sure that the seal is positioned correctly.

- Install lens ②.
- Replace and tighten screws ①.

! Do not fasten the screws too tightly. You could otherwise damage the lens.

- **G 55 AMG:** secure the protective grille (▷ page 98).

Backup lamp/rear fog lamp

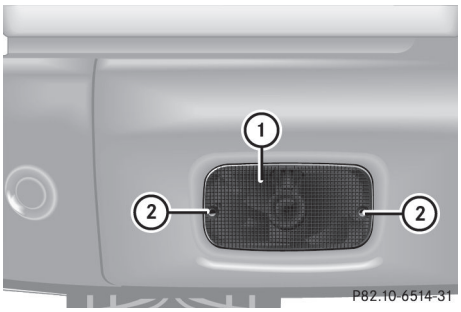

Example: rear fog lamp

- Switch off the lights.
- Remove screws ②.
- Remove lens ①.

- Turn bulb ③ counterclockwise, applying slight pressure, and remove it from the bulb holder.
- Insert the new bulb into the bulb holder and turn it clockwise until it engages.
- Install lens ①.
- Replace and tighten screws ②.

! Do not fasten the screws too tightly. You could otherwise damage the lens.

Windshield wipers

Important safety notes

⚠ **WARNING**

The windshield will not longer be wiped properly if the wiper blades are worn. This could prevent you from observing the traffic conditions, thereby causing an accident. Replace the wiper blades twice a year, ideally in spring and fall.

! Do not operate the windshield wipers when the windshield is dry, as this could damage the wiper blades. Moreover, dust that has collected on the windshield/rear window can scratch the glass if wiping takes place when the windshield/rear window is dry.

If it is necessary to switch on the windshield wipers in dry weather conditions, always use washer fluid when operating the windshield wipers.

! If the windshield wipers leave smears on the windshield/rear window after the vehicle has been washed in an automatic car wash, this may be due to wax or other residue. Clean the windshield/rear window with washer fluid after an automatic car wash.

Switching the windshield wipers on/off

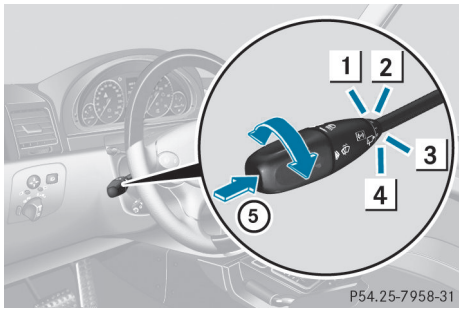

Combination switch

1 Continuous wipe, fast

2 Continuous wipe, slow

3 Intermittent wipe/rain sensor

4 0 Windshield wipers off

5 Single wipe/ To wipe the windshield using washer fluid

▶ Turn the SmartKey to position **1** or **2** in the ignition lock.

▶ Turn the combination switch to the corresponding position.

! Intermittent wiping with rain sensor: due to optical influences and the windshield becoming dirty in dry weather conditions, the windshield wipers may be activated inadvertently. This could then damage the windshield wiper blades or scratch the windshield.

For this reason, you should always switch off the windshield wipers in dry weather.

In the position, the appropriate wiping frequency is set automatically according to the intensity of the rain.

Intermittent wiping is interrupted if you stop and open a front door. This protects people getting into and out of the vehicle from being sprayed with water.

Intermittent wiping continues when all doors are closed and:

- you shift the automatic transmission to drive position **D** or reverse gear **R**

or

- you change the wipe setting on the combination switch.

Switching the rear window wiper on/off

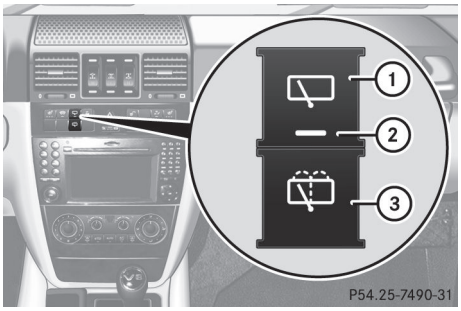

The rear window wiper comes on automatically if you shift the selector lever to **R** while the windshield wipers are on.

▶ Turn the SmartKey to position **1** or **2** in the ignition lock.

▶ **To switch on intermittent wiping:** push button ①.
Indicator lamp ② lights up.

▶ **To switch off intermittent wiping:** push button ① again.
Indicator lamp ② goes out.

▶ **To wipe with washer fluid:** push button ③ and hold it there until the rear window is clean.
The rear window is wiped for a further five seconds after the button is released.

Replacing the wiper blades

Important safety notes

⚠ **WARNING**

For safety reasons, switch off the wipers and remove the SmartKey from the starter switch before replacing a wiper blade. Otherwise, the wiper motor could suddenly turn on and cause injury.

! To avoid damaging the wiper blades, make sure that you touch only the wiper arm of the wiper.

! Never open the hood if a windshield wiper arm has been folded away from the windshield.

Never fold a windshield wiper arm without a wiper blade back onto the windshield/ rear window.

Hold the windshield wiper arm firmly when you change the wiper blade. If you release the windshield wiper arm without a wiper blade and it falls onto the windshield, the windshield may be damaged by the force of the impact.

Mercedes-Benz recommends that you have the wiper blades changed at a qualified specialist workshop.

Removing the wiper blade

▶ Remove the SmartKey from the ignition lock.

▶ Fold the windshield wiper arm away from the windshield until it engages.

▶ Position the wiper blade at right angles.

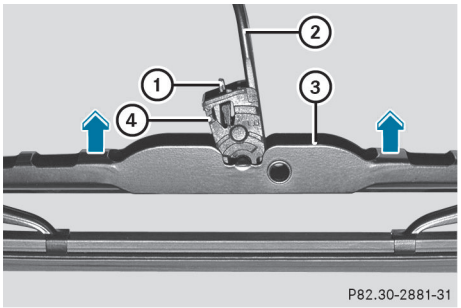

▶ Press locking spring ①.

▶ Slide wiper blade ③ with hinge piece ④ from windshield wiper arm ②.

Installing the wiper blade

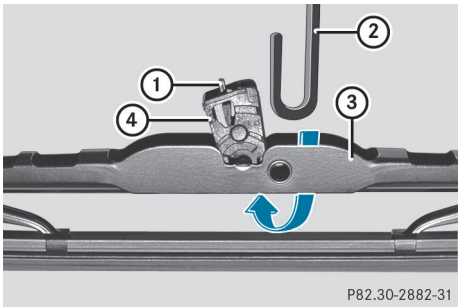

① Locking spring

② Windshield wiper arm

③ Wiper blade

④ Hinge piece

▶ Slide new wiper blade ③ with the recess onto windshield wiper arm ②.

▶ Engage locking spring ① into the end of the wiper arm.

▶ Make sure that wiper blade ③ is seated correctly.

▶ Fold windshield wiper arm ② back onto the windshield.

Problems with the windshield wipers

The windshield wipers are obstructed

Leaves or snow, for example, may be obstructing the windshield wiper movement. The wiper motor has been deactivated.

▶ For safety reasons, you should remove the SmartKey from the ignition lock.

▶ Remove the cause of the obstruction.

▶ Switch the windshield wipers back on.

The windshield wipers are inoperative

The windshield wiper drive is malfunctioning.

▶ Select another wiper speed on the combination switch.

▶ Have the windshield wipers checked at a qualified specialist workshop.

Useful information 104
Overview of climate control systems 104
Operating the climate control system 105
Setting the air vents 110

Useful information

ℹ This Operator's Manual describes all models and all standard and optional equipment of your vehicle available at the time of publication of the Operator's Manual. Country-specific differences are possible. Please note that your vehicle may not be equipped with all features described. This also applies to safety-related systems and functions.

ℹ Please read the information on qualified specialist workshops (▷ page 20).

Overview of climate control systems

Important safety notes

⚠ **WARNING**

Severe conditions (e.g. strong air pollution) may require replacement of the filter before its scheduled replacement interval. A clogged filter will reduce the air volume to the interior and the windows could fog up, impairing visibility and endangering you and others. Have a blocked filter replaced at a Mercedes-Benz Center as soon as possible.

⚠ **WARNING**

Follow the recommended settings for heating and cooling given on the following pages. Otherwise, the windows could fog up, impairing visibility and endangering you and others.

Automatic climate control controls the temperature and the humidity in the vehicle interior and filters undesirable substances from the air.

The automatic climate control is only operational when the engine is running[4]. Optimum operation is only achieved if you drive with the side windows and sliding sunroof closed.

ℹ Ventilate the vehicle for a brief period during warm weather, e.g. using the convenience opening feature (▷ page 69). This will speed up the cooling process and the desired vehicle interior temperature will be reached more quickly.

ℹ The integrated filter can filter out most particles of dust, and completely filters out pollen. A clogged filter reduces the amount of air supplied to the vehicle interior. For this reason, you should always observe the interval for replacing the filter, which is specified in the Maintenance Booklet. As it depends on environmental conditions, e.g. heavy air pollution, the interval may be shorter than stated in the Maintenance Booklet.

4 The residual heat function can only be switched on/off if the ignition is switched off.

Control panel for dual-zone automatic climate control

① To increase/reduce the airflow (▷ page 108)
To switch climate control on/off (▷ page 106)
② To set the temperature, left (▷ page 107)
③ To set the temperature, right (▷ page 107)
④ To set the air distribution (▷ page 107)
⑤ REAR To switch the rear window defroster on/off (USA only) (▷ page 109)
⑤ To switch the rear window defroster on/off (Canada only) (▷ page 109)
⑥ To activate/deactivate cooling with air dehumidification (▷ page 106)
To activate/deactivate the residual heat function (▷ page 110)
⑦ To set climate control to automatic (▷ page 107)
⑧ To activate/deactivate air-recirculation mode (▷ page 110)
⑨ FRONT To defrost the windshield (USA only) (▷ page 108)
⑨ To defrost the windshield (Canada only) (▷ page 108)

Operating the climate control system

Notes on using dual-zone automatic climate control

The following contains notes and recommendations on optimum use of dual-zone automatic climate control.

- Activate climate control using the AUTO and A/C REST buttons. The indicator lamps above the AUTO and A/C REST buttons light up.
- Set the temperature to 72 °F (22 °C).
- Only use the "defrosting" function briefly until the windshield is clear again.
- Only use "air-recirculation" mode briefly, e.g. if there are unpleasant outside odors or when in a tunnel. The windows could

otherwise fog up as, in air-recirculation mode, no fresh air is drawn into the vehicle.

- Use the residual heat function if you want to heat or ventilate the vehicle interior when the ignition is switched off. The "residual heat" function can only be activated or deactivated with the ignition switched off.
- At very low temperatures, the rear window defroster is only switched on once the vehicle interior has warmed up.

Activating/deactivating climate control

Important information

⚠ **WARNING**

When the climate control system is deactivated, the outside air supply and circulation are also deactivated. Only choose this setting for a short time. Otherwise the windows could fog up, impairing visibility and endangering you and others.

ℹ Switch on climate control primarily using the AUTO button (▷ page 107).

Activating/deactivating

▶ Turn the SmartKey to position **2** in the ignition lock.

▶ **To switch on:** turn control ① clockwise to the desired position (except position **0**) (▷ page 105).

▶ The previously selected settings come into effect again.

▶ **To switch off:** turn control ① counter-clockwise to position **0**(▷ page 105).

Activating/deactivating the cooling with air dehumidification function

Important information

The cooling with air dehumidification function is only available when the engine is running.

The air inside the vehicle is cooled and dehumidified according to the temperature selected.

⚠ **WARNING**

If you switch off the cooling function, the vehicle will not be cooled when weather conditions are warm. The windows can fog up more quickly. Window fogging may impair visibility and endanger you and others.

Condensation may drip from the underside of the vehicle when it is in cooling mode. This is normal and not a sign that there is a malfunction.

ℹ The cooling with air dehumidification function uses refrigerant R134a. This coolant does not contain chlorofluorocarbons, and therefore does not damage the ozone layer.

Activating/deactivating

! If the cooling with air dehumidification does not switch on, it is possible that the climate control system has lost coolant.

Have the cooling with air dehumidification checked at a qualified specialist workshop.

▶ **To activate:** press the A/C REST button. The indicator lamp in the A/C REST button lights up.

▶ **To switch off:** press the A/C REST button. The indicator lamp in the A/C REST button goes out. The cooling with air dehumidification function has a delayed switch-off feature.

Problems with the cooling with air dehumidification function

If the indicator lamp in the A/C REST button does not go out or flashes when switched on, the cooling with air dehumidification function is switched off due to a malfunction. You can no longer switch on the cooling with air dehumidification function.

▶ Consult a qualified specialist workshop.

Setting climate control to automatic

⚠ **WARNING**

If you switch off the cooling function, the vehicle will not be cooled when weather conditions are warm. The windows can fog up more quickly. Window fogging may impair visibility and endanger you and others.

In automatic mode, the set temperature is maintained automatically at a constant level. The system automatically regulates the temperature of the dispensed air, the airflow and the air distribution.

Automatic mode will achieve optimal operation if cooling with air dehumidification is also activated. If desired, cooling with air dehumidification can be deactivated.

▶ Turn the SmartKey to position **2** in the ignition lock.

▶ Set the desired temperature.

▶ **To switch on:** press the AUTO button. The indicator lamp in the AUTO button lights up. Automatic air distribution and airflow are activated.

▶ **To switch off:** press the AUTO button. The indicator lamp in the AUTO button goes out. Automatic air distribution and airflow are deactivated.

Setting the temperature

Different temperatures can be set for the driver's and front-passenger sides.

▶ Turn the SmartKey to position **2** in the ignition lock.

▶ **To increase/reduce:** turn controls ② and ③ clockwise or counterclockwise (▷ page 105).

Only change the temperature setting in small increments. Start at 72 °F (22 °C).

ⓘ If you turn the temperature control on one side of the vehicle fully clockwise or counterclockwise, you will increase or reduce the temperature on the other side of the vehicle at the same time.

Setting the air distribution

You can set the air distribution for the entire vehicle.

The symbols for the air distribution have the following meanings:

Symbol	Meaning
	Directs the airflow through the defroster vents to the windshield and side windows
	Directs the airflow to the entire vehicle interior
	Directs the airflow through the footwell and side air vents
	Directs the airflow through the center and side air vents

▶ Turn the SmartKey to position **2** in the ignition lock.

▶ Press the AUTO button. The indicator lamp in the AUTO button goes out.

▶ Turn control ④(▷ page 105) to the corresponding symbol. The control can also be turned to the area between two symbols.

Setting the airflow

▶ Turn the SmartKey to position **2** in the ignition lock.

▶ Press the AUTO button.
The indicator lamp in the AUTO button goes out.

▶ **To increase/reduce:** turn control ① clockwise or counterclockwise (▷ page 105).

ℹ The airflow from the rear-compartment vents and the center vents is the same.

Defrosting the windshield

You can use this function to defrost the windshield or to defrost the inside of the windshield and the side windows.

ℹ You should only select the defrosting function until the windshield is clear again.

ℹ When you switch on the "defrosting" function using the FRONT [5] or [6] button, you cannot adjust any of the other settings.

▶ Turn the SmartKey to position **2** in the ignition lock.

▶ **To switch on:** press the FRONT [5] or [6] button.
The indicator lamp in the FRONT [5] or [6] button comes on.
The climate control system switches to the following functions:

- cooling with air dehumidification on
- high airflow
- high temperature
- air distribution to the windshield and front side windows
- air-recirculation mode off

ℹ If necessary, also activate the windshield defroster (▷ page 108).

▶ **To deactivate:** press the FRONT [5] or [6] button.
The indicator lamp in the FRONT [5] or [6] button goes off. The previously selected settings come into effect again.

or

▶ Press the AUTO button.
The indicator lamp in the AUTO button lights up. The indicator lamp in the [6] button goes out. Airflow and air distribution are set to automatic mode.

Defrosting the windows

Windows fogged up on the inside

▶ Activate the defrosting function.

▶ If necessary, activate the windshield heating (▷ page 108).

ℹ You should only select this setting until the windshield is clear again.

Windows fogged up on the outside

▶ Activate the windshield wipers.

▶ Close the center air vents.

When automatic air distribution is switched off:

▶ Turn the air distribution thumbwheel to the [ ] or [ ] symbol.

ℹ You should only select this setting until the windshield is clear again.

▶ If necessary, activate the windshield heating (▷ page 108).

Switching the windshield defroster on/off

⚠ **WARNING**
Any accumulation of snow and ice should be removed from the windshield before driving.

5 USA only.
6 Canada only.

Otherwise, your vision may be impaired, which could endanger you or others.

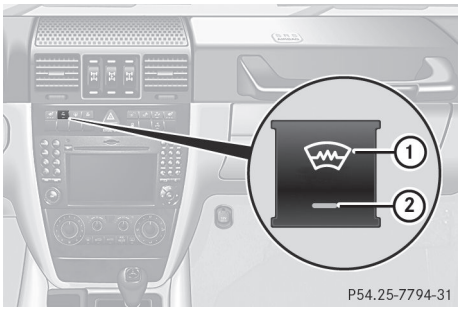

ℹ At outside temperatures over 50 °F (10 °C) the windshield defroster cannot be switched on. Indicator lamp ② lights up briefly when you attempt to activate it and then goes out again.

ℹ The windshield defroster has a high current draw. You should therefore switch it off as soon as the windshield is clear. The windshield defroster switches off automatically after ten minutes.

ℹ If you switch on the windshield defroster four times in a row, it switches off automatically after five minutes.

ℹ If too many electrical consumers are switched on simultaneously and the battery voltage is too low, indicator lamp ② flashes in windshield defroster switch ①. After about 30 seconds the windshield defroster switches off.

▶ Turn the SmartKey to position **2** in the ignition lock.

▶ Press button ① on the windshield defroster.
Indicator lamp ② lights up or goes out.

Switching the rear window defroster on/off

Activating/deactivating

⚠ **WARNING**
Any accumulation of snow and ice should be removed from the rear window before driving. Visibility could otherwise be impaired, endangering you and others.

The rear window defroster has a high current draw. You should therefore switch it off as soon as the window is clear. as it only switches off automatically after several minutes.

If the battery voltage is too low, the rear window defroster may switch off.

▶ Turn the SmartKey to position **2** in the ignition lock.

▶ To switch on, press the [REAR][7] or [ ][8] button.
The indicator lamp in the [REAR][7] or [ ][8] button goes off.

Problems with the rear window defroster

If the indicator lamp in the [REAR][7] or [ ][8] rear window defroster button flashes, the on-board voltage is too low. The rear window defroster has deactivated prematurely or cannot be activated.

▶ Switch off any consumers that are not required, e.g. reading lamps or interior lighting.
When the battery is sufficiently charged, the rear window defroster is activated again automatically.

7 USA only.
8 Canada only.

Activating/deactivating air-recirculation mode

You can deactivate the flow of fresh air if unpleasant odors are entering the vehicle from outside. The air already inside the vehicle will then be recirculated.

⚠ **WARNING**

Fogged windows impair visibility, endangering you and others. If the windows begin to fog on the inside, switching off the air recirculation mode immediately should clear interior window fogging. If interior window fogging persists, make sure the air conditioning is activated, or press button [OFF] or [FRONT].

▶ Turn the SmartKey to position **2** in the ignition lock.

▶ **To switch on:** press the [ ] button. The indicator lamp in the [ ] button lights up.

ℹ Air-recirculation mode is activated automatically at high outside temperatures. When air-recirculation mode is activated automatically, the indicator lamp in the [ ] button is not lit.

Outside air is added after about 30 minutes.

▶ **To switch off:** press the [ ] button. The indicator lamp in the [ ] button goes out.

ℹ Air-recirculation mode switches off automatically:

- after approximately five minutes if outside temperatures are less than about 41 °F (5 °C)
- after approximately five minutes if cooling with air dehumidification is deactivated
- after approximately 30 minutes if outside temperatures are over about 41 °F (5 °C)

Activating/deactivating the residual heat function

It is possible to make use of the residual heat of the engine to continue heating the stationary vehicle for up to 30 minutes after the engine has been switched off. The heating time depends on the coolant temperature and on the interior temperature that has been set.

ℹ The blower will run at a low speed regardless of the airflow setting.

ℹ If you activate the residual heat function at high temperatures, only the ventilation will be activated.

▶ Turn the SmartKey to position **0** in the ignition lock or remove it.

▶ **To activate:** press the [A/C REST] button. The indicator lamp in the [A/C REST] button lights up.

▶ **To switch off:** press the [A/C REST] button. The indicator lamp in the [A/C REST] button goes out.

ℹ Residual heat is deactivated automatically:

- after about 30 minutes
- when the ignition is switched on
- if the battery voltage drops
- if the coolant temperature is too low

Setting the air vents

Important safety notes

⚠ **WARNING**

When operating the climate control, the air that enters the passenger compartment through the air vents can be very hot or very cold (depending on the set temperature). This could cause burns or frostbite to unprotected skin in the immediate area of the air vents.

Always keep sufficient distance between unprotected parts of the body and the air vents. If necessary, use the air distribution

adjustment to direct the air to air vents in the vehicle interior that are not in the immediate area of unprotected skin.

In order to ensure the direct flow of fresh air through the air vents into the vehicle interior, please observe the following notes:

- keep the air intake grille on the hood free of blockages, such as ice, snow or leaves
- never cover the air vents or air intake grille in the vehicle interior.

ℹ For virtually draft-free ventilation, adjust the sliders of the air vents to the center position.

Setting the center air vents

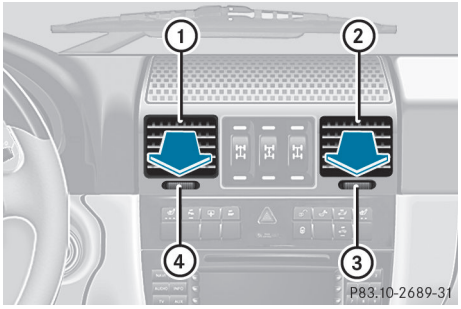

Center air vents

① Center air vent, left

② Center air vent, right

③ Center vent thumbwheel, right

④ Center vent thumbwheel, left

▶ **To open/close:** turn thumbwheels ③ and ④ to the right or left.

Setting the side air vents

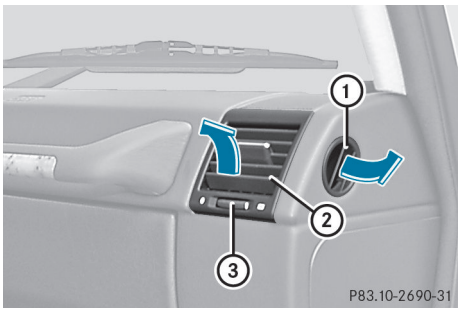

Side air vents

① Side air vent

② Swiveling side air vent

③ Control for side air vent

▶ **To open/close:** turn thumbwheel ③ to the left or right.

Setting the rear-compartment air vents

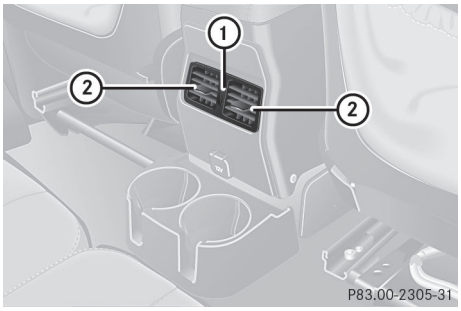

▶ **To open/close:** turn thumbwheel ① up or down.

▶ **To set the air direction:** move slider ② for the corresponding rear-compartment air vent to the left, right, up or down.

Useful information 114
Breaking-in notes 114
Driving 114
Automatic transmission 119
Refueling 124
Parking 127
Driving tips 129
Driving systems 139
Off-road driving systems 145

Useful information

ℹ This Operator's Manual describes all models and all standard and optional equipment of your vehicle available at the time of publication of the Operator's Manual. Country-specific differences are possible. Please note that your vehicle may not be equipped with all features described. This also applies to safety-related systems and functions.

ℹ Please read the information on qualified specialist workshops (▷ page 20).

Breaking-in notes

The first 1000 miles (1500 km)

The more you look after the engine when it is new, the more satisfied you will be with its performance in the future.

- Drive at varying vehicle speeds and engine speeds for the first 1000 miles (1500 km) for this reason.
- Avoid overstraining the vehicle during this period, e.g. driving at full throttle.
- Change gear in good time, at the latest when the tachometer needle is $^{2}/_{3}$ of the way to the red area in the tachometer display.
- Do not manually shift to a lower gear to brake the vehicle.
- If possible, do not depress the accelerator pedal past the point of resistance (kickdown).
- Only select shift ranges **3**, **2** or **1** when driving slowly, e.g. in mountainous terrain.

After 1000 miles (1500 km), you can increase the engine speed gradually and bring the vehicle up to full speed.

Additional breaking-in notes for AMG vehicles:

- do not drive faster than 85 mph (140 km/h) in the first 1000 miles (1500 km).
- only allow the engine to reach a maximum engine speed of 4500 rpm briefly.
- change gear in good time.
- avoid off-road use before the differential oil change at 2000 miles (3000 km).

ℹ You should also observe these breaking-in notes if the engine or parts of the drive train on your vehicle have been replaced.

ℹ Always observe the respective speed restrictions.

Driving

Important safety notes

⚠ **WARNING**

Make sure absolutely no objects are obstructing the pedals' range of movement. Keep the driver's footwell clear of all obstacles. If there are any floormats or carpets in the footwell, make sure the pedals still have sufficient clearance.

During sudden driving or braking maneuvers the objects could get caught between the pedals. You could then no longer brake or accelerate. This could lead to accidents and injury.

⚠ **WARNING**

On slippery road surfaces, never downshift in order to obtain braking action. This could result in drive wheel slip and reduced vehicle control. Your vehicle's ABS will not prevent this type of loss of control.

⚠ **WARNING**

It is dangerous to shift the automatic transmission out of parking position **P** or neutral position **N** if the engine speed is higher than idle speed. If your foot is not firmly

on the brake pedal, the vehicle could accelerate quickly forward or in reverse. You could lose control of the vehicle and hit someone or something. Only shift into gear when the engine is idling normally and when your right foot is firmly on the brake pedal.

! Warm up the engine quickly. Do not use the engine's full performance until it has reached operating temperature.

Only shift the automatic transmission to the desired drive position when the vehicle is stationary.

Where possible, avoid spinning the drive wheels when pulling away on slippery roads. You could otherwise damage the drive train.

! Avoid high engine speeds when the engine is cold. The engine's service life could otherwise be significantly shortened. Do not use the engine's full performance until it has reached operating temperature.

SmartKey positions

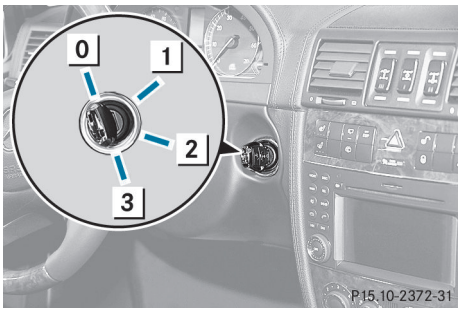

0 To remove the SmartKey

1 Power supply for some consumers, such as the windshield wipers

2 Ignition (power supply for all consumers) and drive position

3 To start the engine

ⓘ You can only remove the SmartKey if:

- the SmartKey is in position **0** in the ignition lock.
- the automatic transmission selector lever is in **P**.

As soon as the ignition is switched on, all the indicator lamps in the instrument cluster light up. If an indicator lamp does not go out after the engine is started or if it lights up while the vehicle is in motion, see (▷ page 180).

If the SmartKey is in position **0** in the ignition lock for an extended period of time, it can no longer be turned in the ignition lock. The steering is then locked. To unlock, remove the SmartKey and reinsert it into the ignition lock.

The steering is locked when you remove the SmartKey from the ignition lock.

▶ Remove the SmartKey when the engine is switched off.
The starter battery could otherwise be discharged.

If you cannot turn the SmartKey in the ignition lock, the starter battery may not be charged sufficiently.

▶ Check the starter battery and charge if necessary (▷ page 231).

or

▶ Jump-start the vehicle (▷ page 233).

Starting the engine

Important safety notes

⚠ **WARNING**

Inhalation of exhaust gas is hazardous to your health. All exhaust gas contains carbon monoxide (CO), and inhaling it can cause unconsciousness and possible death.

Do not run the engine in confined areas (such as a garage) which are not properly ventilated. If you think that exhaust gas fumes are entering the vehicle while driving, have the cause determined and corrected immediately. If you must drive under these

▷▷

conditions, drive only with at least one window fully open at all times.

! Do not depress the accelerator pedal when starting the engine.

Starting procedure

▶ Shift the automatic transmission to position **P**.
The transmission position display in the multifunction display shows **P**.

ⓘ Further information about the automatic transmission (▷ page 119).

ⓘ If you depress the brake when starting the engine, pedal travel is unusually long and there is less pedal resistance.

▶ Make sure that the parking brake is applied.

▶ Turn the SmartKey to position **3** in the ignition lock (▷ page 115) and release it as soon as the engine is running.

ⓘ You can start the engine without preglow if the engine is warm.

ⓘ You can also use the touch-start function. To do this, turn the SmartKey to position **3** (▷ page 115) and release it immediately. The engine then starts automatically.

Pulling away

Automatic transmission

⚠ **WARNING**

It is dangerous to shift the automatic transmission out of parking position **P** or neutral position **N** if the engine speed is higher than idle speed. If your foot is not firmly on the brake pedal, the vehicle could accelerate quickly forward or in reverse. You could lose control of the vehicle and hit someone or something. Only shift into gear when the engine is idling normally and when your right foot is firmly on the brake pedal.

! Only shift the automatic transmission to reverse gear **R** or park position **P** when the vehicle is stationary. Otherwise, the automatic transmission could be damaged.

ⓘ It is only possible to shift the automatic transmission from position **P** to a different position if you depress the brake pedal. Only then is the selector lever lock released.

▶ Depress the brake pedal and keep it depressed.

▶ Shift the automatic transmission to position **D** or **R**.

ⓘ Before driving off, wait until the gear change is fully completed.

▶ Release the parking brake (▷ page 128).

▶ Release the brake pedal.

▶ Carefully depress the accelerator pedal.

! Do not depress the accelerator pedal while depressing the brake pedal. This impairs engine performance and results in premature wear on the brake system and drivetrain.

! If a warning tone sounds and the `Release Park. Brake` message appears in the multifunction display, the parking brake is still applied. Release the parking brake.

ⓘ The vehicle locks centrally once you have pulled away. The locking knobs in the doors drop down.

You can open the doors from the inside at any time.

You can also deactivate the automatic locking feature (▷ page 161).

ⓘ Upshifts take place at higher engine speeds after a cold start. This helps the catalytic converter to reach its operating temperature more quickly.

Hill start assist

Hill start assist helps you when pulling away forwards or in reverse on an uphill gradient. It holds the vehicle for a short time after you have removed your foot from the brake pedal. This gives you enough time to move your foot from the brake pedal to the accelerator pedal and depress it before the vehicle begins to roll.

⚠ **WARNING**

Never leave the vehicle when it is held by hill start assist. After approximately one second, hill start assist will no longer brake your vehicle and it could roll away.

▶ Take your foot off the brake pedal.

ℹ Once you have taken your foot off the brake pedal, the vehicle is held for around one second.

▶ Pull away.

Hill start assist will not function if:

- you are pulling away on a level road or a downhill gradient.
- the transmission is in position **N**.
- the parking brake is applied.
- ESP® is malfunctioning.

Problems with the engine	
Problem	**Possible causes/consequences and ▶ Solutions**
The engine does not start. The starter motor can be heard.	• There is a malfunction in the engine electronics. • There is a malfunction in the fuel supply. ▶ Turn the SmartKey back to position **0** in the ignition lock before attempting to start the engine again. ▶ Try to start the engine again (▷ page 115). Avoid excessively long and frequent attempts to start the engine as these will drain the battery. If the engine does not start after several attempts: ▶ Consult a qualified specialist workshop.
The engine does not start. The starter motor can be heard. The yellow reserve fuel warning lamp is on. The fuel gauge needle is pointing to the reserve range and does not drop any further.	The fuel tank is empty. ▶ Refuel the vehicle.
The engine does not start. You cannot hear the starter motor.	The on-board voltage is too low because the battery is too weak or discharged. ▶ Jump-start the vehicle (▷ page 233). If the engine does not start despite attempts to jump-start it: ▶ Consult a qualified specialist workshop.
	The starter motor was exposed to a thermal load that was too high. ▶ Allow the starter motor to cool down for approximately two minutes. ▶ Try to start the engine again. If the engine still does not start: ▶ Consult a qualified specialist workshop.

Problem	Possible causes/consequences and ▶ Solutions
The engine is not running smoothly and is misfiring.	There is a malfunction in the engine electronics or a mechanical component of the engine management system. ▶ Only depress the accelerator pedal slightly. ▶ Have the cause rectified immediately at a qualified specialist workshop. Otherwise, non-combusted fuel may get into the catalytic converter and damage it.
The coolant temperature gauge shows a value above 248 °F(120 °C). Additionally, a display message may appear in the multifunction display and a warning tone may sound.	The coolant level is too low. The coolant is too hot and the engine is no longer being cooled sufficiently. ▶ Stop as soon as possible and allow the engine and the coolant to cool down. ▶ Check the coolant level (▷ page 213). Observe the warning notes as you do so and add coolant if necessary.

Automatic transmission

Important safety notes

⚠ **WARNING**

It is dangerous to shift the automatic transmission out of parking position **P** or neutral position **N** if the engine speed is higher than idle speed. If your foot is not firmly on the brake pedal, the vehicle could accelerate quickly forward or in reverse. You could lose control of the vehicle and hit someone or something. Only shift into gear when the engine is idling normally and when your right foot is firmly on the brake pedal.

⚠ **WARNING**

On slippery road surfaces, never downshift in order to obtain braking action. This could result in drive wheel slip and reduced vehicle control. Your vehicle's ABS will not prevent this type of loss of control.

⚠ **WARNING**

Keep in mind that turning off the engine alone only will shift the automatic transmission into neutral position **N** automatically.

Always shift the automatic transmission into park position **P** before turning off the engine.

Otherwise the vehicle could roll away which could result in an accident and/or serious personal injury.

ℹ Bear in mind that the power transmission between the engine and the transmission is interrupted when the engine is switched off. Therefore, to prevent the vehicle from rolling away, shift the automatic transmission to position **P** and apply the parking brake when the engine is switched off and the vehicle is stationary.

Selector lever

Overview of transmission positions

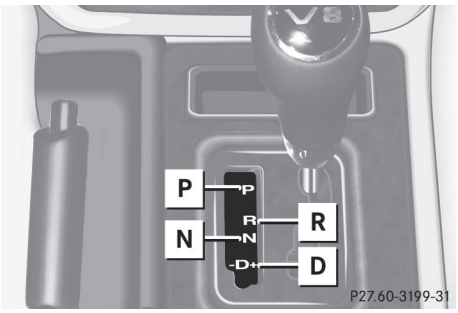

Selector lever

P Park position with selector lever lock

R Reverse gear

N Neutral

D Drive

Transmission position display

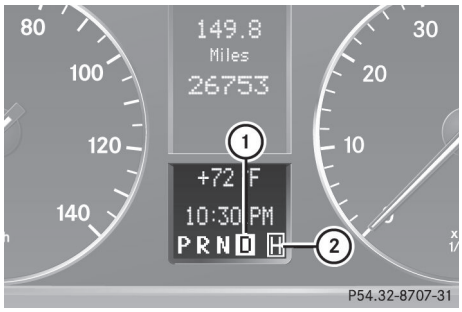

① Transmission position/shift range

② Transfer case position

Current shift range ① and current transfer case position ② are shown in the instrument cluster display.

! If the transmission position display in the multifunction display is not working, you should pull away carefully to check whether the desired transmission position is engaged. Select transmission position **D**. Do not restrict the shift range.

The current position of the selector lever is shown by the indicators next to the selector lever.

The indicators light up when the SmartKey is inserted into the ignition lock. The indicators go out when the SmartKey is removed from the ignition lock.

When the selector lever is in position **D**, you can influence the gearshifts made by the automatic transmission by:

- restricting the shift range
- changing gear yourself

Transmission positions

P	**Park position** Do not shift the transmission into position **P**(▷ page 127) unless the vehicle is stationary. The parking lock should not be used as a brake when parking. In addition to engaging the parking lock, you must always apply the parking brake to secure the vehicle. ℹ The SmartKey can only be removed if the transmission is in position **P**. When there is no SmartKey in the ignition lock, the selector lever is locked in position **P**. If the vehicle electronics are malfunctioning, the selector lever may be locked in position **P**. To release a locked selector lever, see "Manual override of parking lock" (▷ page 124). Have the vehicle electronics checked immediately at a qualified specialist workshop.
R	**Reverse gear** Only shift the transmission to **R** when the vehicle is stationary.

N	**Neutral** No power is transmitted from the engine to the drive wheels. Releasing the brakes will allow you to move the vehicle freely, e.g. to push it or tow it. Do not shift the transmission to **N** while driving. Otherwise, the automatic transmission could be damaged. If ESP® is deactivated or faulty: only shift the transmission to position **N** if the vehicle is in danger of skidding, e.g. on icy roads. If you want to engage the transfer case, shift briefly into **N** (▷ page 145). ! Rolling in neutral **N** can damage the drive train.
D	**Drive** The automatic transmission changes gear automatically. All forward gears are available.

Changing gear

The automatic transmission shifts to the individual gears automatically when it is in transmission position **D**. This automatic gearshifting behavior is determined by:

- a shift range restriction, if selected
- the position of the transfer case (**HIGH** or **LOW**)
- the position of the accelerator pedal
- the road speed

Driving tips

Accelerator pedal position

Your style of driving influences how the automatic transmission shifts gear:

- little throttle: early upshifts
- more throttle: late upshifts

Kickdown

Use kickdown for maximum acceleration.

▶ Depress the accelerator pedal beyond the pressure point.
The transmission shifts to a lower gear depending on the engine speed.

▶ Ease off the accelerator pedal once the desired speed is reached.
The automatic transmission shifts back up.

Working on the vehicle

⚠ **WARNING**

When working on the vehicle, engage the parking brake and shift the automatic transmission into park position **P**. Otherwise the vehicle could roll away which could result in an accident and/or serious personal injury.

Shift ranges

Introduction

When the automatic transmission is in position **D**, it is possible to restrict or derestrict the shift range (▷ page 121).

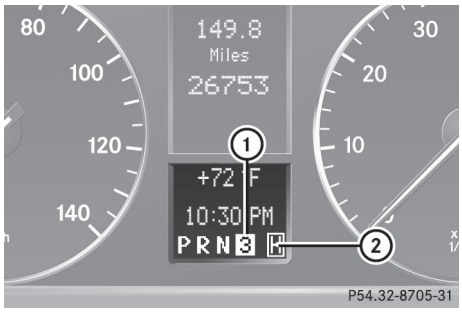

① Shift range selected

② Current transfer case position

Selected shift range ① and current transfer case position ② are shown in the cluster multifunction display. The automatic transmission shifts only as far as the selected gear.

! When the transfer case is in the off-road driving position **LOW** range, the automatic transmission does not shift up, even when the engine has reached the overrevving limit. There is then a risk of engine damage. Make sure that you do not exceed the maximum permissible engine speed.

Driving situations	
3	You can use the engine's braking effect.
2	To use the braking effect of the engine on downhill gradients and for driving: • on steep mountain roads • in mountainous terrain • in arduous conditions
1	To use the braking effect of the engine on extremely steep downhill gradients and on long downhill stretches

Restricting the shift range

▶ Press the selector lever to the left towards **D–**.
The automatic transmission shifts down to the next gear, depending on the gear currently selected. This also restricts the shift range.

ℹ If the engine exceeds the maximum engine speed when shifting down, the automatic transmission protects against engine damage by not shifting down.

ℹ If the maximum engine speed for the shift range is reached and you continue to accelerate, the automatic transmission shifts up in order to prevent the engine from overrevving, even if the shift range is restricted.

Derestricting the shift range

▶ Briefly press the selector lever to the right towards **D+**.
The automatic transmission shifts up to the next gear, depending on the shift range selected. This also derestricts the shift range.

Clearing the shift range restriction

▶ Press and hold the selector lever towards **D+** until **D** is shown once more in the multifunction display.
The automatic transmission shifts from the current shift range directly to **D**.

Selecting the ideal shift range

▶ Press the selector lever to the left towards **D–** and hold it in position.
The automatic transmission shifts to the gear which allows optimum acceleration and deceleration. To do this, the automatic transmission shifts down one or more gears.

ℹ The automatic transmission cannot shift down beyond second gear. To shift into first

gear, the selector lever must be moved towards **D–** again.

Problems with the automatic transmission

Problem	Possible causes/consequences and ▶ Solutions
The acceleration ability is deteriorating. The transmission no longer changes gear.	The transmission is in emergency mode. It is only possible to shift into **second** gear and reverse gear. ▶ Stop the vehicle. ▶ Shift the transmission to position **P**. ▶ Turn the SmartKey to position **0** in the ignition lock. ▶ Wait at least ten seconds before restarting the engine. ▶ Shift the transmission to position **D** or **R**. If **D** is selected, the transmission shifts into **second** gear; if **R** is selected, the transmission shifts into reverse gear. ▶ Have the transmission checked at a qualified specialist workshop immediately.
You hear a warning tone.	You have: • switched off the engine • opened the driver's door • not moved the selector lever to position **P** ▶ Move the selector lever to **P**.

Releasing the parking lock manually

In the event of a malfunction, it is possible to release the selector lever lock manually to move it out of position **P**, e.g. if you wish to have the vehicle towed.

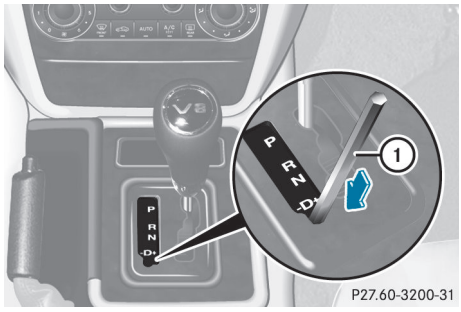

P27.60-3200-31

▶ Apply the parking brake.

▶ Insert a suitable implement ① into the opening protected by the flap.

▶ Press implement ① downwards and simultaneously move the selector lever out of position **P**.

▶ Remove implement ①.
The selector lever can now be moved freely until it is returned to position **P**.

ℹ The protective flap only closes completely if you briefly press to selector lever towards **D-**.

Refueling

Important safety notes

⚠ **WARNING**

Gasoline is highly flammable and poisonous. It burns violently and can cause serious personal injury.

Never allow sparks, flames or smoking materials near gasoline.

Turn off the engine before refueling.

Whenever you are around gasoline, avoid inhaling fumes and any skin or clothing contact.

Direct skin contact with fuels and the inhalation of fuel vapors are damaging to your health.

⚠ **WARNING**

Overfilling of the fuel tank may create pressure in the system which could cause a gas discharge. This could cause the gasoline to spray back out when removing the fuel pump nozzle, which could cause personal injury.

! Do not use diesel to refuel vehicles with a gasoline engine. Even small amounts of the wrong fuel result in damage to the fuel system and engine.

! Do not switch on the ignition if you accidentally refuel with the wrong fuel. Otherwise, the fuel will enter the fuel lines. Notify a qualified specialist workshop and have the fuel tank and fuel lines drained completely.

Gasoline

Fuel grade

! You should only refuel with unleaded premium-grade gasoline as this avoids damaging the catalytic converter.

If engine running problems are apparent, have the cause checked immediately and repaired. Excess unburned fuel can otherwise enter the catalytic converter, leading to overheating and possibly causing a fire.

ⓘ Only refuel with premium-grade unleaded gasoline with a specified minimum octane number of 91 (average value of 96 RON/ 86 MON).

You will usually find information about the fuel grade on the pump. If you cannot find the label on the gasoline pump, ask the gas station staff.

You can find more information under "Fuel" (▷ page 273), by contacting an authorized Mercedes-Benz Service Center or by visiting **http://bevo.mercedes-benz.com**.

! Use a filter when refueling from a fuel can. Otherwise, the fuel lines and/or injection system could be blocked by particles from the fuel can.

Refueling

Fuel filler flap

When you open or close the vehicle with the SmartKey, the fuel filler flap is automatically unlocked or locked.

The position of the fuel filler cap ⛽ is displayed in the instrument cluster. The arrow next to the filling pump indicates the side of the vehicle. The fuel filler flap is located to the rear on the right.

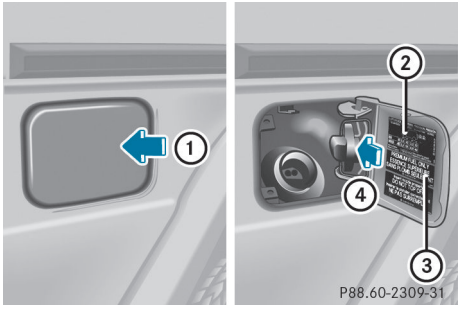

Example: G 550 fuel filler cap

① To open the fuel filler flap

② Tire pressure table

③ Fuel type

④ To insert the fuel filler cap

Opening

▶ Switch off the engine.

ⓘ When the engine is running and the fuel filler flap is open, the yellow reserve fuel warning lamp and the [check engine] (USA only) or [engine] (Canada only) Check Engine warning lamp may light up.

For further information on warning and indicator lamps in the instrument cluster, see (▷ page 184).

▶ Remove the SmartKey from the ignition lock.

▶ Press the fuel filler flap in the direction of arrow ①.
The fuel filler flap opens slightly.

▶ Open the fuel filler flap.

▶ Turn the fuel filler cap counterclockwise and remove it.

▶ Insert the fuel filler cap into the holder bracket on the inside of filler flap ④.

▶ Completely insert the fuel pump nozzle into the filler neck and refuel.

▶ Only fill the tank until the pump nozzle switches off.

! Overfilling the fuel tank could damage the fuel system.

Closing

▶ Replace the fuel filler cap and turn it clockwise. The fuel filler cap audibly engages.

▶ Close the fuel filler flap.

ⓘ Close the fuel filler flap before locking the vehicle. A locking pin otherwise prevents the fuel filler flap from closing after the vehicle has been locked.

Fuel filler flap emergency release

⚠ **WARNING**

Avoid contact with the vehicle walls as they may contain sharp edges. Otherwise, you could injure yourself while releasing the fuel filler flap.

The emergency release is located in the cargo compartment, on the right-hand side when viewed in the direction of travel, behind the rear panel trim.

▶ Open the rear door.

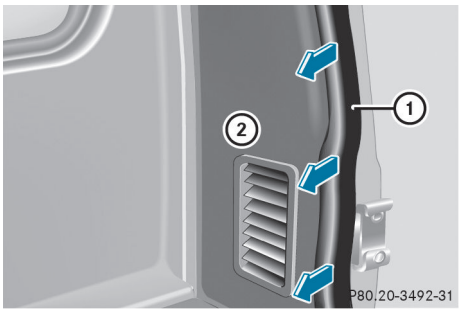

▶ Disconnect edge guard ① on the door pillar.

▶ Remove rear panel trim ②.

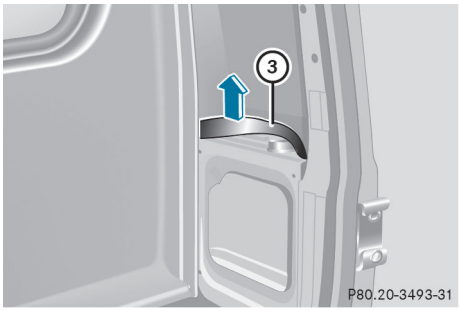

▶ Pull emergency release ③ in the direction of the arrow.
The fuel filler flap is unlocked.

▶ Open the fuel filler flap.

Problems with the fuel and fuel tank

Problem	Possible causes/consequences and ▶ Solutions
Fuel is leaking from the vehicle.	⚠ **Risk of explosion or fire** The fuel line or the fuel tank is defective. ▶ Turn the SmartKey to position **0** (▷ page 115) in the ignition lock immediately and remove it. ▶ Do not restart the engine under any circumstances. ▶ Consult a qualified specialist workshop.
The fuel filler flap cannot be opened.	The fuel filler flap is not unlocked. or The SmartKey batteries are discharged. ▶ Unlock the vehicle (▷ page 60). or ▶ Unlock the vehicle using the mechanical key (▷ page 61). ▶ Open the rear door. ▶ Manually unlock the fuel filler flap using the emergency release (▷ page 126).
	The fuel filler flap is unlocked, but the opening mechanism is jammed. ▶ Manually unlock the fuel filler flap using the emergency release (▷ page 126). ▶ Consult a qualified specialist workshop.

Parking

Important safety notes

⚠ **WARNING**

Do not park this vehicle in areas where combustible materials can come into contact with the hot exhaust system. Do not park the vehicle on dry grassland or harvested grain fields. Combustible materials, such as grass, hay or leaves could be ignited by the hot exhaust system and cause a vehicle fire.

Unintended vehicle movement can cause serious personal injury or damage to the vehicle or the vehicle drivetrain. To reduce such risks, always do the following before turning off the engine and leaving the vehicle:

- keep your right foot on the brake pedal.
- engage the parking brake.
- shift the automatic transmission into park position **P**.
- slowly release the brake pedal.
- when parked on an incline, always turn the front wheels towards the road curb.

▷▷

- turn the SmartKey in the ignition lock to position **0** and remove the SmartKey from the ignition lock.
- take the SmartKey with you and lock the vehicle when leaving.

Switching off the engine

⚠ **WARNING**

Do not turn off the engine before the vehicle has come to a complete stop. With the engine not running, there is no power assistance for the brake and steering systems. In this case, it is important to keep in mind that a considerably higher degree of effort is necessary to brake and steer the vehicle.

⚠ **WARNING**

Keep in mind that turning off the engine alone only will shift the automatic transmission into neutral position **N** automatically.

Always shift the automatic transmission into park position **P** before turning off the engine.

Otherwise the vehicle could roll away which could result in an accident and/or serious personal injury.

▶ Shift the transmission to position **P**.

▶ Turn the SmartKey to position **0** in the ignition lock and remove it.
The immobilizer is activated.

▶ Apply the parking brake firmly.

ℹ The SmartKey can only be removed if the automatic transmission is in position **P**.

Parking brake

⚠ **WARNING**

Engaging the parking brake while the vehicle is in motion can cause the rear wheels to lock up. You could lose control of the vehicle and cause an accident. In addition, the vehicle's brake lights do not light up when the parking brake is engaged.

⚠ **WARNING**

When leaving the vehicle, always remove the SmartKey from the starter switch, take it with you, and lock the vehicle. Do not leave children unattended in the vehicle, or with access to an unlocked vehicle. Children could release the parking brake and/or shift the automatic transmission out of park position **P**, either of which could result in an accident and/or serious personal injury.

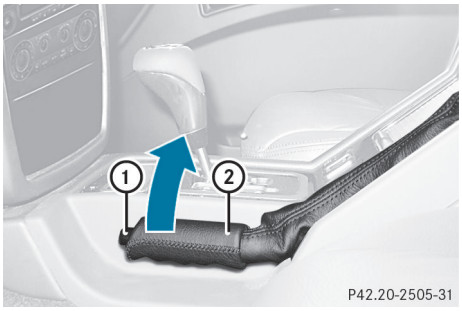

▶ **To apply:** pull parking brake ② up firmly.
When the engine is running, the BRAKE (USA only) or (!) (Canada only) indicator lamp lights up in the instrument cluster.

▶ **To release:** depress the brake pedal and keep it depressed.
The selector lever lock is released.

▶ Pull parking brake ② up firmly.

▶ Press release button ① on parking brake ② and move the parking brake down to the stop.
When the ignition is switched on or the engine is running, the BRAKE (USA only) or (!) (Canada only) indicator lamp goes out in the instrument cluster.

Parking the vehicle for a long period

If you leave the vehicle parked for longer than four weeks, the battery may be damaged by exhaustive discharge.

▶ Connect a trickle charger.

ℹ You can obtain information about trickle chargers from a qualified specialist workshop.

If you leave the vehicle parked for longer than six weeks, the vehicle may suffer damage as a result of lack of use.

▶ Visit a qualified specialist workshop and seek advice.

Driving tips

General driving tips

Important safety notes

⚠ **WARNING**

Always remember that you must concentrate primarily on driving the vehicle. The driver's concentration must always be directed primarily at road traffic. For your own safety and that of others, we recommend that you stop the vehicle at a safe place and in accordance with the traffic conditions before making or accepting a phone call.

Comply with all legal requirements if you use the telephone while driving. Use the hands-free system and only use the telephone when road, weather and traffic conditions permit. In some jurisdictions, it is forbidden for drivers to use mobile phones while driving.

Only operate COMAND (Cockpit Management and Data System) in compliance with all legal requirements and when the road, weather and traffic conditions permit. You may otherwise not be able to observe the traffic conditions, endangering yourself and others.

Remember that your vehicle covers a distance of 44 feet (approximately 14 m) a second when it is traveling at only 30 mph (approximately 50 km/h).

Drive sensibly – save fuel

Observe the following tips to save fuel:

▶ The tires should always be inflated to the recommended tire pressure.

▶ Remove unnecessary loads.

▶ Remove roof carriers when they are not needed.

▶ Warm up the engine at low engine speeds.

▶ Avoid frequent acceleration or braking.

▶ Have all maintenance work performed at the service intervals specified in the Maintenance Booklet or indicated by the service interval indicator.

Fuel consumption also increases when driving in cold weather, in stop-and-go traffic and in mountainous terrain.

Drinking and driving

⚠ **WARNING**

Drinking and driving and/or taking drugs and driving are very dangerous combinations. Even a small amount of alcohol or drugs can affect your reflexes, perceptions and judgment.

The possibility of a serious or even fatal accident are greatly increased when you drink or take drugs and drive.

Do not drink or take drugs and drive or allow anyone to drive who has been drinking or taking drugs.

Pedals

⚠ **WARNING**

Make sure absolutely no objects are obstructing the pedals' range of movement. Keep the driver's footwell clear of all obstacles. If there are any floormats or carpets in the footwell, make sure that the pedals still have sufficient clearance.

During sudden driving or braking maneuvers, the objects could get caught between the pedals. You could then no longer brake or

▷▷

accelerate. This could lead to accidents and injury.

Rolling with the engine switched off

⚠ **WARNING**

There is no power assistance for the steering and the brake when the engine is not running.

Steering and braking requires significantly more effort and you could lose control of the vehicle and cause an accident as a result.

Do not turn off the engine while the vehicle is in motion.

Exhaust check

⚠ **WARNING**

Inhalation of exhaust gas is hazardous to your health. All exhaust gas contains carbon monoxide (CO), and inhaling it can cause unconsciousness and possible death.

Do not run the engine in confined areas (such as a garage) which are not properly ventilated. If you think that exhaust gas fumes are entering the vehicle while driving, have the cause determined and corrected immediately. If you must drive under these conditions, drive only with at least one window fully open at all times.

Certain engine systems are designed to keep the level of poisonous components in exhaust fumes within legal limits.

These systems only work at peak efficiency when they are maintained exactly in accordance with the manufacturer's specifications. For this reason, all work on the engine must be carried out only by qualified and authorized Mercedes-Benz technicians.

The engine settings must not be changed in any circumstances. Furthermore, all specific service work must be carried out at regular intervals and in accordance with the Mercedes-Benz service requirements. Details can be found in the Maintenance Booklet.

Brakes

Important safety notes

⚠ **WARNING**

On slippery road surfaces, never downshift in order to obtain braking action. This could result in drive wheel slip and reduced vehicle control. Your vehicle's ABS will not prevent this type of control loss.

Do not engage the transfer case in position **LOW** when driving on ice or packed snow. At speeds below 18 mph (30 km/h) vehicle steering is adversely affected by the Off-road ABS.

Downhill gradients

! On long and steep gradients, you must reduce the load on the brakes by shifting early to a lower gear. This allows you to take advantage of the engine braking effect and helps avoid overheating and excessive wear of the brakes.

When you take advantage of the engine braking effect, a drive wheel may not turn for some time, e.g. on a slippery road surface. This could cause damage to the drive train. This type of damage is not covered by the Mercedes-Benz warranty.

Heavy and light loads

⚠ **WARNING**

Depressing the brake pedal constantly results in excessive and premature wear to the brake pads.

It may also cause the brakes to overheat, seriously impairing their effectiveness. It may then not be possible to stop the vehicle in sufficient time to avoid an accident.

If the brakes have been subjected to a heavy load, do not stop the vehicle immediately, but drive on for a short while. This allows the airflow to cool the brakes more quickly.

Wet roads

⚠ **WARNING**

After driving in heavy rain for some time without applying the brakes or through water deep enough to wet brake components, the first braking action may be somewhat reduced. You have to depress the brake pedal more firmly. Maintain a safe distance from vehicles in front.

After driving on a wet road or having the vehicle washed, brake firmly while paying attention to the traffic conditions. This will warm up the brake discs, thereby drying them more quickly and protecting them against corrosion.

⚠ **WARNING**

Make sure that you do not endanger other road users when you apply the brakes.

Limited braking performance on salt-treated roads

⚠ **WARNING**

The layer of salt on the brake discs and the brake pads/linings may cause a delay in the braking effect, resulting in a significantly longer braking distance, which could lead to an accident.

To avoid this danger, you should:

- occasionally brake carefully, without putting other road users at risk, when you are driving on salted roads. This helps to remove any salt that may have started to build up on the brake discs and the brake pads/linings.
- maintain a greater distance to the vehicle ahead and drive with particular care.
- carefully apply the brakes at the end of a trip and immediately after commencing a new trip, so that salt residues are removed from the brake discs.

Servicing the brakes

⚠ **WARNING**

If brake pads or brake fluid other than those recommended are used, the braking properties of the vehicle can be degraded to an extent that safe braking is substantially impaired. This could result in an accident.

⚠ **WARNING**

Make sure that you do not endanger other road users when you apply the brakes.

! If the brake warning lamp lights up in the instrument cluster and you hear a warning tone even though the parking brake has been released, the brake fluid level may be too low. Observe additional warning messages in the multifunction display.

The brake fluid level may be too low due to brake pad wear or leaking brake lines.

Have the brake system checked immediately. Have this work carried out at an authorized Mercedes-Benz Center.

! A function or performance test should only be carried out on a 2-axle dynamometer. If you are planning to have the vehicle tested on such a dynamometer, contact an authorized Mercedes-Benz Center to obtain further information first. Otherwise, you could damage the drive train or the brake system.

! As the ESP® system operates automatically, the engine and the ignition must be switched off (the SmartKey must be in position **0** or **1** in the ignition lock) if the parking brake is tested on a brake dynamometer (for a maximum of ten seconds).

Braking applications triggered automatically by ESP® may otherwise seriously damage the brake system.

All checks and maintenance work on the brake system must be carried out at a qualified specialist workshop.

Have brake pads installed and brake fluid replaced at a qualified specialist workshop.

If your brake system is subject only to moderate loads, you should test the functionality of your brakes at regular intervals by pressing firmly on the brake pedal at high speeds. This improves the grip of the brake pads.

You can find a description of Brake Assist (BAS) on (▷ page 54).

High-performance brake system for AMG vehicles

The high-performance brake system is installed only on the G 55 AMG.

⚠ **WARNING**

New vehicle brake pads and discs, and replacement brake pads and discs may take several hundred miles of driving until they provide optimum braking efficiency. Until that time, you may need to use increased brake pedal pressure while braking. Please be aware of this and adjust your driving and braking accordingly during this break-in period.

Excessive high-demand braking will cause correspondingly high brake wear. Please be attentive to the brake warning lamp in the instrument cluster and brake condition messages in the multifunction display. Especially for high performance driving, it is important to maintain and have the brake system checked regularly.

The high-performance brake system is designed for heavy loads. This may lead to noise when braking. This will depend on:

- speed
- braking force
- environmental conditions, such as temperature and humidity

The wear of individual components of the brake system, such as the brake pads/linings or brake discs, depends on the individual driving style and operating conditions.

For this reason, it is impossible to state a mileage that will be valid under all circumstances. An aggressive driving style will lead to high wear. You can obtain further information about this from your authorized Mercedes-Benz Center.

Parking brake

⚠ **WARNING**

While performing this procedure please assure that the vehicle is stopped before applying the parking brake. Otherwise the rear wheels could lock up. You could lose control of the vehicle and cause an accident. In addition, the vehicle's brake lights do not light up when the parking brake is engaged. Make sure not to endanger any other road users when you engage the parking brake.

If you drive on wet roads or dirt-covered surfaces, road salt and/or dirt could get into the parking brake.

In order to prevent corrosion and a reduction in the braking power of the parking brake, observe the following:

- pull the parking brake upwards with the release button depressed from time to time before beginning the journey (▷ page 128).
- Drive a distance of approximately 110 yds (100 m) with a maximum speed of 12 mph (20 km/h).

Driving on wet roads

Hydroplaning

If water has accumulated to a certain depth on the road surface, there is a danger of hydroplaning occurring, even if:

- you drive at low speeds.
- the tires have adequate tread depth.

For this reason, in the event of heavy rain or in conditions in which hydroplaning can occur, you must drive in the following manner:

- lower your speed.
- avoid ruts.
- brake carefully.

Driving on flooded roads

! Do not drive through flooded areas. Check the depth of any water before driving through it. Drive slowly through standing water. Otherwise, water may enter the vehicle interior or the engine compartment. This can damage the electronic components in the engine or the automatic transmission. Water can also be drawn in by the engine's air suction nozzles and this can cause engine damage.

If you have to drive on stretches of road on which water has collected, please bear in mind that:

- the maximum permissible still water depth is 50 cm.
- you should drive no faster than at walking pace.

Off-road fording

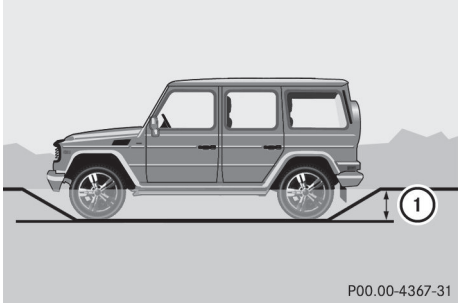

① Fording depth, 20 in (50 cm)

The fording depth must not exceed 20 in (50 cm) when the vehicle is loaded and ready to drive.

! The water depth must not exceed 20 in (50 cm). Note that the possible fording depth is less in flowing water.

i You may only drive through freshwater.

- Observe the safety notes (▷ page 134) and the general notes (▷ page 135) on off-road driving.
- Establish how deep the water is and the characteristics of the body of water before fording.
- Switch off the auxiliary heating and the air-conditioning system.
- Shift the transfer case to **LOW** (▷ page 145).
- Engage the differential locks, if necessary (▷ page 148).
- Restrict the shift range to **1** or **2** (▷ page 121).
- Avoid high engine speeds.
- Enter and exit the water at a flat place and at a steady walking pace.

! Under no circumstances should you accelerate before entering the water. The bow wave could cause water to enter and damage the engine and other assemblies.

- Drive slowly and at an even speed through the water.
- Do not stop and do not switch off the engine.

! Do not open any of the vehicle's doors while fording. Otherwise, water could get into the vehicle interior and damage the vehicle's electronics and interior equipment.

- Water offers a high degree of resistance, and the ground is slippery and in some cases unstable. Therefore, it is difficult and dangerous to pull away in the water.
- Ensure that a bow wave does not form as you drive.
- Clean any mud from the tire tread after fording.
- Apply the brakes to dry them after fording.

Winter driving

General notes

⚠ **WARNING**

If the vehicle becomes trapped in snow, ensure that snow is kept away from the exhaust pipe and from around the vehicle as long as the engine is running. Otherwise, poisonous carbon monoxide (CO) may enter the vehicle, resulting in loss of consciousness and even death.

To assure sufficient fresh air ventilation, open a window slightly on the side of the vehicle not facing the wind.

Have your vehicle winterproofed at a qualified specialist workshop at the onset of winter.

Observe the notes in the "Winter operation" section (▷ page 244).

Driving with summer tires

Observe the notes in the "Winter operation" section (▷ page 244).

Slippery road surfaces

⚠ **WARNING**

The outside temperature indicator is not designed to serve as an ice-warning device and is therefore unsuitable for that purpose.

Indicated temperatures just above the freezing point do not guarantee that the road surface is free of ice. The road may still be icy, especially in wooded areas or on bridges.

⚠ **WARNING**

On slippery road surfaces, never downshift in order to obtain braking action. This could result in drive wheel slip and reduced vehicle control. Your vehicle's ABS will not prevent this type of control loss.

Do not engage the transfer case in position **LOW** when driving on ice or packed snow. At speeds below 18 mph (30 km/h) vehicle steering is adversely affected by the Off-road ABS.

Drive particularly carefully on slippery road surfaces. Avoid sudden acceleration, steering and braking maneuvers. Do not use cruise control.

If the vehicle threatens to skid or cannot be stopped when moving at low speed:

- ▶ Shift the transmission to position **N**.
- ▶ Try to bring the vehicle under control using corrective steering.

ℹ For more information on driving with snow chains, see (▷ page 245).

⚠ **WARNING**

Make sure that you do not endanger other road users when you apply the brakes.

Off-road driving

Important safety notes

⚠ **WARNING**

Grains of sand, particles of dirt and other abrasive materials can enter the brake system. This can lead to excessive wear and unpredictable braking efficiency.

After the brakes have been exposed to dirty conditions, have them checked and cleaned at a qualified specialist workshop. Otherwise, there is a risk that braking power may be insufficient in the event of an emergency, or that the braking effect may be unpredictable.

⚠ **WARNING**

Do not load items on the basic carrier bars. It may cause instability during some maneuvers which could result in an accident.

Drive slowly in unknown terrain. This will make it easier to recognize unexpected obstacles and avoid damage to the vehicle.

To help avoid the vehicle rolling over, never turn it around on steep inclines. If the vehicle

cannot complete the attempted climb, back it down in reverse gear.

Do not drive along the side of a slope. The vehicle might otherwise rollover. If in doing so the vehicle begins to show a tendency to roll, immediately steer into a line of gravity (straight up or downhill).

Never let the vehicle roll backwards in idle. You may lose control of the vehicle if you use only the service brake. For information on driving downhill, see "Driving downhill".

⚠ **WARNING**

Do not reduce the tire inflation pressure before driving through sand. However, if you do so, remember to correct the tire inflation pressure before continuing your trip. Driving with reduced tire inflation pressure increases the risk of losing control of the vehicle and rolling over.

General notes

Read this section carefully before driving your vehicle off-road. Practice by driving over more gentle off-road terrain first.

Familiarize yourself with the characteristics of your vehicle and the gear shift operation before driving through difficult terrain.

The following driving systems are specially adapted to off-road driving:

- 4ETS (▷ page 56)
- transfer case (▷ page 145)
- differential locks (▷ page 148)

Observe the following notes:

- stop your vehicle and, if necessary, shift the transfer case to **LOW** (▷ page 145) before driving off-road.
- engage the differential locks, if necessary (▷ page 148).

ℹ ABS, 4ETS, ESP® and BAS are deactivated when the differential locks are activated. This allows the front wheels to lock briefly, so that these can dig into a loose surface. However, please note that locked wheels skid and can no longer steer.

- Check that items of luggage and loads are stowed safely and are well secured (▷ page 192).
- Make sure there is always sufficient ground clearance to prevent damage to the vehicle.
- Always keep the engine running and in gear when driving on a downhill gradient.
- Always keep the engine running and in gear when driving on a slope.
- Drive slowly and evenly, if necessary at a walking pace.
- Ensure that the wheels are in contact with the ground at all times.
- Drive with extreme care on unknown off-road routes where visibility is poor. For safety reasons, get out of the vehicle first and survey the off-road route.
- Check the depth of water before fording rivers and streams.
- When fording, do not stop and do not switch off the engine.
- Look out for obstacles such as rocks, holes, tree stumps and furrows.
- Always keep the doors, rear door, side windows and the sliding sunroof closed while the vehicle is in motion.
- Switch off cruise control.
- Do not stray from marked routes or paths.
- Adapt your speed to the terrain. The rougher, steeper or more ruts on the terrain, the slower your speed should be.
- Drive slowly and at an even speed through the water. Ensure that a bow wave does not form as you drive.
- On sand, drive quickly to overcome the rolling resistance. Otherwise, the vehicle could dig itself into the sand.
- Do not jump with the vehicle as this will interrupt the vehicle's propulsion.

- Avoid high engine speeds. Drive at appropriate engine speeds (maximum 3000 rpm).
- Do not shift the automatic transmission to transmission position **N**.
- Always check the vehicle for damage after off-road driving.

ℹ Information about retrofitting special all-terrain tires is available from any authorized Mercedes-Benz Center.

Environmental note

Protection of the environment is of primary importance. Treat nature with respect. Observe all prohibiting signs.

Checklist before driving off-road

▶ **Engine oil level:** check the engine oil level and add oil if necessary.
Only then does the engine receive enough oil when the vehicle is standing on a steep incline.

! If the engine oil warning lamp lights up while the vehicle is in motion, stop the vehicle in a safe place as soon as possible. Check the engine oil level. The engine oil warning lamp warning must not be ignored. Continuing the journey while the symbol is displayed could lead to engine damage.

▶ **Wheel-changing tool kit:** check that the jack is working and make sure you have the lug wrench, a robust tow cable and a folding spade in the vehicle.

▶ **Wheels and tires:** check the tire tread depth and tire pressure.

▶ Check for damage and remove any foreign objects, e.g. small stones, from the wheels/tires.

▶ Replace any missing valve caps.

▶ Replace dented or damaged wheels.

▶ Carry a sound spare wheel.

Checklist after driving off-road

⚠ **WARNING**

If you notice sudden significant vibrations or unusual handling performance or if you suspect that damage has occurred to the vehicle, you should activate the hazard warning lamps, gently reduce speed and carefully head for an area that is located at a safe distance from the road.

Check the tires and the underside of the vehicle for damage. If the vehicle seems unsafe, have the vehicle towed away to the nearest Mercedes-Benz Center or tire dealer to be repaired.

Driving over rough terrain places greater demands on your vehicle than driving on normal roads. After driving off-road, check the vehicle. This allows you to detect damage promptly and reduce the risk of an accident to yourself and other road users.

▶ Shift the transfer case to **HIGH** (▷ page 145).

▶ Disengage the differential locks (▷ page 148).

▶ Clean the headlamps and rear lights and check for damage.

▶ Clean the front and rear license plates.

▶ Clean the wheels and tires with a water jet and remove any foreign objects.

▶ Clean the wheels, tires, wheel arches and the vehicle underside with a water jet; check for any foreign objects and damage.

▶ Check whether twigs or other parts of plants have become trapped. These increase the risk of fire and can damage fuel pipes, brake hoses or the rubber bellows of the axle joints and propeller shafts.

▶ After the trip, examine without fail the entire undercarriage, wheels, tires, brakes, bodywork structure, steering, chassis and exhaust system for damage.

▶ After driving for extended periods across sand, mud, gravel, water or in similarly dirty conditions, have the brake discs, wheels, brake pads/linings and axle joints checked and cleaned.

▶ If you notice strong vibrations after off-road driving, check for foreign objects in the wheels and drive train and, if necessary, remove them. Foreign objects can disturb the balance and cause vibrations.

▶ Test the brakes.

Driving on sand

⚠ **WARNING**

Do not reduce the tire inflation pressure before driving through sand. However, if you do so, remember to correct the tire inflation pressure before continuing your trip. Driving with reduced tire inflation pressure increases the risk of losing control of the vehicle and rolling over.

Observe the following rules when driving on sand:

- shift the transfer case to **LOW** (▷ page 145).
- avoid high engine speeds.
- limit the shift range of the automatic transmission according to the off-road conditions.
- drive quickly to overcome the rolling resistance. Otherwise, the vehicle could dig itself into the sand.
- drive in the tracks of other vehicles if possible. Make sure that the ruts are not too deep, that the sand is firm enough and that your vehicle has sufficient ground clearance.

Tire ruts and gravel roads

Observe the following rules when driving along ruts in off-road terrain or on roads with loose gravel:

! Check that the ruts are not too deep and that your vehicle has sufficient clearance. Otherwise, your vehicle could be damaged or bottom out and get stuck.

- shift the transfer case to **LOW** (▷ page 145).
- avoid high engine speeds.
- observe the safety notes (▷ page 134) and the general notes (▷ page 135) on off-road driving.
- restrict the shift range of the automatic transmission to **1** (▷ page 121).
- drive slowly.
- where ruts are too deep, drive with the wheels of one side on the center grassy area, if possible.

Driving over obstacles

! Obstacles could damage the floor of the vehicle or components of the chassis. Ask passengers for guidance when driving over large obstacles. The passenger should always keep a safe distance from the vehicle when doing so in order to avoid injury as a result of unexpected vehicle movements. After driving off-road or over obstacles, check the vehicle for possible damage, especially to the underbody and the components of the chassis.

Observe the following rules when driving over tree stumps, large stones and other obstacles:

- observe the safety notes (▷ page 134) and the general notes (▷ page 135) on off-road driving.
- shift the transfer case to **LOW** (▷ page 145).
- avoid high engine speeds.
- select shift range **1** (▷ page 121).
- make sure that you have enough ground clearance before driving across an obstacle.
- drive very slowly.
- try to drive straight over the center of obstacles: front wheel first, then rear wheel.

! Drive with particular care when driving over an obstacle while driving up or down a steep slope.

The vehicle could otherwise tilt and slide sideways or tip over.

Traveling uphill

Approach/departure angle

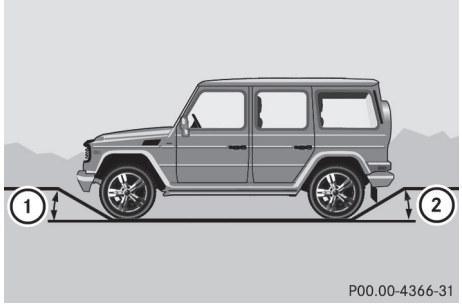

① Approach/departure angle, front

② Approach/departure angle, rear

	①	②
G 550	37°	31°
G 55 AMG	33°	28°

- Observe the safety notes (▷ page 134) and the general notes (▷ page 135) on off-road driving.
- Do not drive at an angle on slopes, inclines or gradients, but instead follow the direct line of fall. The maximum gradient-climbing capability of your vehicle is 80%, which corresponds to an approach/departure angle of 38°. Note that the vehicle's gradient-climbing capability depends on the off-road conditions.
- Before driving on extreme uphill and downhill gradients, shift the transfer case to **LOW** (▷ page 145).
- Engage the differential locks, if necessary (▷ page 148).
- Drive slowly.
- Accelerate gently and make sure that the wheels are gripping.
- Avoid high engine speeds, except when driving on sandy and muddy routes with high driving resistance.
- Avoid high engine speeds – drive at appropriate engine speeds (no more than 3000 rpm).
- Use the braking power of the engine when driving down a slope. Observe the engine speed; do not overrev the engine.

i Further information on the maximum engine speed can be found in the "Tachometer" and "Technical data" sections.

- Select a shift range appropriate to the gradient.
- Before tackling steep downhill gradients, select shift range **1** (▷ page 121).
- Check the brakes after driving off-road for a long time.

⚠ WARNING

Never turn the vehicle around on steep inclines. The vehicle might roll over. If the vehicle cannot complete the attempted climb, back it down in reverse gear.

ℹ Hill start assist will aid you when pulling away on a hill.

For further information, see "Hill start assist" (▷ page 117).

Maximum gradient-climbing capability

On good road surface conditions, the maximum gradient-climbing capability is 80%, which corresponds to an approach/departure angle of 38°. Note that the vehicle's gradient-climbing capability depends on the off-road conditions.

Accelerate carefully and make sure that the wheels do not spin when driving on steep terrain.

ℹ If the load on the front axle is reduced when pulling away on a steep uphill slope, the front wheels have a tendency to spin. 4ETS detects this and brakes the wheels accordingly. The rear wheel torque is increased, making it easier to drive off.

Brow of hill

When driving on an uphill gradient, reduce pressure slightly on the accelerator immediately before reaching the top of the hill (do not shift the transmission to position **N**). Use the vehicle's own impetus to drive over the top of the hill.

This style of driving prevents:

- the vehicle from lifting off the ground on the brow of a hill
- loss of traction
- the vehicle from traveling too quickly down the other side

Driving downhill

- Before tackling steep downhill gradients, select shift range **1** (▷ page 121).

  This way you use the engine's braking effect to reduce the speed. If this is not sufficient, brake gently. When doing so, make sure that the vehicle is facing in the direction of the line of fall.
- Observe the notes on driving in mountainous terrain (▷ page 139).
- Drive slowly.
- Do not drive at an angle down steep inclines. Steer into the line of fall and drive with the front wheels aligned straight. Otherwise, the vehicle could slip sideways, tip and roll over.
- Check that the brakes are working normally after a long downhill stretch.

ℹ The special off-road ABS(▷ page 54) enables accurate, brief and repeated locking of the front wheels, causing them to dig into the loose ground. Note that when the front wheels are fully braked, they slide easily over the surface of the ground, making it difficult to steer.

Driving systems

Cruise control

Important safety notes

Cruise control maintains a constant road speed for you. On long and steep downhill gradients, especially if the vehicle is laden, you must select shift range **1**, **2** or **3** in good time. By doing so, you will make use of the braking effect of the engine, which relieves the load on the brake system and prevents the brakes from overheating and wearing too quickly.

Use cruise control only if road and traffic conditions make it appropriate to maintain a steady speed for a prolonged period. You can set any road speed above 20 mph (30 km/h).

⚠ **WARNING**

The cruise control is a convenience system designed to assist the driver during vehicle operation. The driver is and must always

remain responsible for the vehicle's speed and for safe brake operation.

Only use the cruise control if the road, traffic, and weather conditions make it advisable to travel at a constant speed.

- The use of the cruise control can be dangerous on winding roads or in heavy traffic because conditions do not allow safe driving at a constant speed.
- The use of the cruise control can be dangerous on slippery roads. Rapid changes in tire traction can result in wheel spin and loss of control.
- Deactivate the cruise control when driving in fog.

The "Resume" function should only be operated if the driver is fully aware of the previously set speed and wishes to resume this particular preset speed.

Cruise control lever

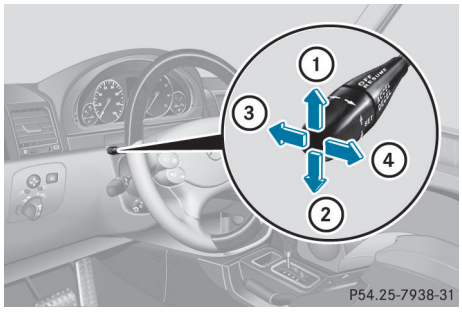

① To store the current speed or a higher speed

② To store the current speed or a lower speed

③ To deactivate cruise control

④ To call up the last speed stored

When you activate cruise control, the stored speed is shown in the multifunction display for five seconds.

Storing and maintaining the current speed

You can store the current speed if you are driving faster than 20 mph (30 km/h).

▶ Accelerate the vehicle to the desired speed.

▶ Briefly press the cruise control lever up ① or down ②.

▶ Remove your foot from the accelerator pedal.
Cruise control is activated. The vehicle automatically maintains the stored speed.

ℹ Cruise control may be unable to maintain the stored speed on uphill and downhill gradients. The stored speed is resumed when the gradient levels out.

Calling up the last speed stored

⚠ **WARNING**

The set speed stored in memory should only be set again if prevailing road conditions and legal speed limits permit. Possible acceleration or deceleration differences arising from returning to the preset speed could cause an accident and/or serious injury to you and others.

▶ Briefly pull the cruise control lever towards you ④.

▶ Remove your foot from the accelerator pedal.
Cruise control is activated and adjusts the vehicle's speed to the last speed stored.

Setting a speed

⚠ **WARNING**

Keep in mind that it may take a brief moment until the vehicle has made the necessary adjustments.

Increase or decrease the set vehicle speed to a value that the prevailing road conditions and legal speed limits permit. Otherwise, sudden and unexpected acceleration or deceleration

of the vehicle could cause an accident and/ or serious injury to you and others.

▶ Press the cruise control lever up ① for a higher speed or down ② for a lower speed.

▶ Keep the cruise control lever pressed until the desired speed is reached.

▶ Release the cruise control lever.
The new speed is stored.

ℹ Cruise control is not deactivated if you depress the accelerator pedal. For example, if you accelerate briefly to overtake, cruise control adjusts the vehicle's speed to the last speed stored after you have finished overtaking.

Making adjustments in 1 mph (Canada: 1 km/h) increments

▶ Briefly press the cruise control lever up ① for a higher speed or down ② for a lower speed.
The last speed stored is increased or reduced.

Deactivating cruise control

There are several ways to deactivate cruise control:

▶ Briefly press the cruise control lever forwards ③.

or

▶ Brake.

Cruise control is automatically deactivated if:

- you apply the parking brake.
- you are driving below 20 mph (30 km/h).
- ESP® intervenes or you deactivate ESP®.
- you shift the transmission to position **N** while driving.

ℹ The last speed stored is cleared when you switch off the engine.

4MATIC (permanent four-wheel drive)

4MATIC ensures that all four wheels are permanently driven. Together with ESP® and 4ETS, it improves the traction of your vehicle whenever a drive wheel spins due to insufficient grip.

⚠ **WARNING**

If a drive wheel is spinning due to insufficient traction:

- While driving off, apply as little throttle as possible.
- While driving, ease up on the accelerator pedal.
- Adapt your speed and driving style to the prevailing road conditions.

Failure to observe these guidelines could cause the vehicle to skid.

4MATIC cannot prevent accidents resulting from excessive speed.

! Never tow the vehicle with one axle raised. This may damage the transfer case. Damage of this sort is not covered by the Mercedes-Benz Limited Warranty. All wheels must remain either on the ground or be fully raised. Observe the instructions for towing the vehicle with all wheels in full contact with the ground.

ℹ In wintry driving conditions, the maximum effect of 4MATIC can only be achieved if you use winter tires (M+S tires), with snow chains if necessary.

! When testing the parking brake, operate the vehicle only briefly (for a maximum of ten seconds) on a brake test dynamometer. When doing this, turn the SmartKey to position **0** or **1** in the ignition. Failure to do this can cause damage to the drive train or the brake system.

! Function or performance tests may only be performed on a 2-axle dynamometer. If you wish to operate the vehicle on such a dynamometer, please consult an authorized Mercedes-Benz Center

beforehand. You could otherwise damage the drive train or the brake system.

Information about driving off-road (▷ page 134).

Ultrasonic backing-up aid

Important safety notes

⚠ **WARNING**

The ultrasonic backing up aid is only designed to assist you and may not detect all obstacles. It is not a substitute for paying attention.

You are always responsible for safety and must continue to pay attention to your immediate surroundings when parking and maneuvering. Otherwise, you could endanger yourself and others.

⚠ **WARNING**

Make sure that no persons or animals are in the maneuvering range. Otherwise, they could be injured.

The ultrasonic backing up aid is an electronic parking aid. It indicates visually and audibly the distance between the rear area of your vehicle and an object.

The ultrasonic backing up aid is activated automatically when you switch on the ignition and engage reverse gear.

The ultrasonic backing up aid monitors the rear area of your vehicle using four sensors in the rear bumper.

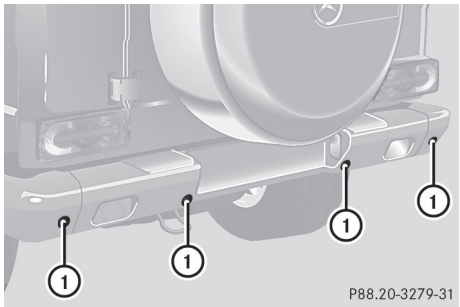

① Sensors in the rear bumper

Range of the sensors

The sensors must be free of dirt, ice and slush; otherwise they may not function correctly. Clean the sensors regularly, taking care not to scratch or damage them (▷ page 220).

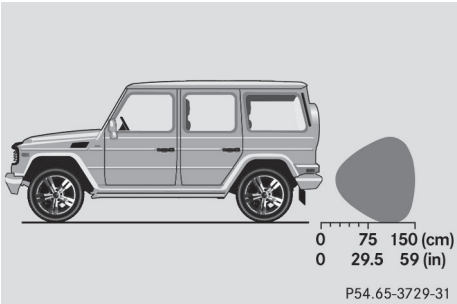

Side view

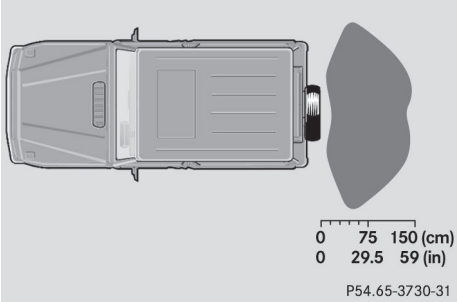

Top view

Sensors

Center	Approx. 59 in (approx. 150 cm)
Corners	Approximately 40 in (approximately 100 cm)

! When parking, pay particular attention to objects above or below the sensors, such as flower pots or trailer towbars. The ultrasonic backing up aid does not detect such objects when they are in the immediate vicinity of the vehicle. You could damage the vehicle or the objects.

Ultrasonic sources such as an automatic car wash, the compressed air-brakes on a

truck or a pneumatic drill could cause the ultrasonic backing up aid to malfunction.

Minimum distance

Center	Approximately 8 in (approximately 20 cm)
Corners	Approximately 8 in (approximately 20 cm)

If there is an obstacle within this range, all warning displays flash and a warning tone sounds. If the distance falls below the minimum, the distance may no longer be shown.

Warning displays

The warning display shows the distance between the sensors and the obstacle.

The warning display is in the rear compartment next to the rear door.

The warning display is divided into four yellow and two red segments ①. The ultrasonic backing up aid is ready for use when you hear a warning tone and segment ② lights up briefly.

One or more segments ① light up as the vehicle approaches an obstacle, depending on the distance from the obstacle.

From the:

- fourth segment you will hear an intermittent warning tone
- fifth segment you will hear a faster intermittent warning tone
- sixth segment you will hear a very fast intermittent warning tone. This indicates that you have now reached the minimum distance.

Problems with the ultrasonic backing-up aid

Problem	Possible causes/consequences and ▶ Solutions
You hear a warning signal when backing up.	The ultrasonic backing up aid sensors are dirty or there is interference. ▶ Clean the ultrasonic backing up aid sensors (▷ page 220). ▶ Switch the ignition back on.
	The problem may be caused by an external source of radio or ultrasound waves. The ultrasonic backing up aid is switched off. ▶ See if the ultrasonic backing up aid functions in a different location.
You hear a warning tone when backing up or you do not hear a warning tone and none of the segments light up.	The ultrasonic backing up aid has malfunctioned and has switched itself off. ▶ Have the ultrasonic backing up aid checked at a qualified specialist workshop as soon as possible.

Rear view camera

Important safety notes

The rear view camera is an optical parking aid. It shows the area behind your vehicle in the COMAND display.

⚠ **WARNING**

Make sure that no persons or animals are in the maneuvering range. Otherwise, they could be injured.

The rear view camera is in the tailgate above the rear window wiper.

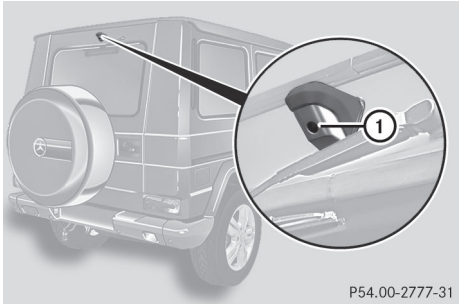

① Rear view camera

View through the camera

The area behind the vehicle is displayed in a mirror-inverted manner, as in the rear-view mirror.

⚠ **WARNING**

The rear view camera is only an aid and may show a distorted view of obstacles, show them incorrectly or not at all. The rear view camera is not a substitute for paying attention. The camera cannot show objects in the following areas:

- very close to the rear bumper
- under the rear bumper
- under the spare wheel
- behind and close to the spare wheel

You are always responsible for safety and must continue to pay attention to your immediate surroundings when parking and maneuvering. This applies to the areas behind, in front of and beside the vehicle. Otherwise, you could endanger yourself and others.

⚠ **WARNING**

Under the following circumstances, the rear view camera will not function, or will function in a limited manner:

- the tailgate is open
- in heavy rain, snow or fog
- at night or in very dark places
- if the camera is exposed to very bright light
- if the area is lit by fluorescent light or LED lighting (the display may flicker)
- if there is a sudden change in temperature, e.g. when driving into a heated garage in winter
- if the camera lens is dirty or obstructed
- if the rear of your vehicle is damaged. In this event, have the camera position and setting checked at a qualified specialist workshop.

Do not use the rear view camera in these types of situation. You could otherwise injure others or damage objects and your vehicle while you are parking.

Activating the rear view camera

▶ Make sure that the SmartKey is in position **2** in the ignition lock.

▶ Make sure that the "rear view camera" function is selected in COMAND (see the separate operating instructions for COMAND).

▶ Engage reverse gear.
The area behind the vehicle is shown in the COMAND display.

Off-road driving systems

Transfer case

General information

The vehicle has permanent all-wheel drive. Power is always transmitted to both axles.

For further information on driving off-road, see (▷ page 134).

Shift ranges

H	**HIGH** Position for all normal on-road driving conditions.
L	**LOW** Low-range position for driving off-road. Also for use on steep uphill or downhill gradients, especially when towing a trailer. ! When the transfer case is in the off-road driving position **LOW** range, the automatic transmission does not shift up, even when the engine has reached the overrevving limit. There is then a risk of engine damage. Make sure that you do not exceed the maximum permissible engine speed. The vehicle travels around half the speed of on-road driving range **HIGH**. The tractive power is correspondingly higher.
N	**Neutral** Neutral position. No power is transmitted to the drive wheels.

Shifting the transfer case

General information

⚠ **WARNING**

If you do not wait for the gear change process to complete, it may not be correctly implemented. The transfer case may then be in neutral and the power transmission between the engine and the drive axles may be disengaged. The vehicle can then move freely, even if a gear is engaged, and may inadvertently start moving, particularly if it is on a slope. There is therefore a risk of an accident.

Always wait for the gear change process from **HIGH** to **LOW** and from **LOW** to **HIGH** to complete. Do not turn off the engine while changing gear and do not shift the automatic transmission to another gear.

Observe the relevant messages in the multifunction display.

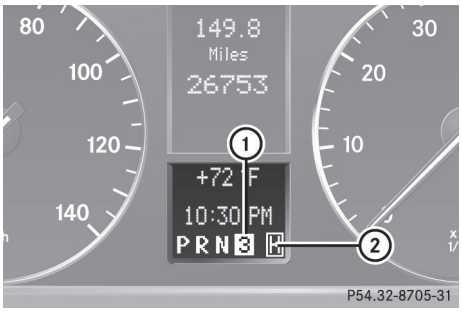

① Current shift range

② Current transfer case position

Current shift range ① and transfer case position ② are shown in the instrument cluster multifunction display.

The switch for the transfer case is on the lower section of the center console.

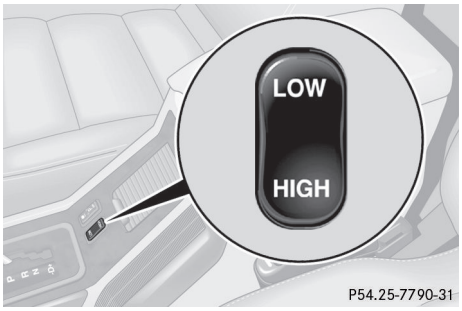

Transfer case switch

From HIGH to LOW

! Only carry out the gear selection if:

- the engine is running.
- the vehicle is rolling.

- the automatic transmission is in selector lever position **N**.
- you are driving no faster than 25 mph (40 km/h).

You could otherwise damage the transfer case.

▶ Push the transfer case switch to **LOW**. When the shift procedure is complete, the L transfer case position appears in the multifunction display.

▶ Shift the transmission to position **D**.

From LOW to HIGH

! Only carry out the gear selection if:

- the engine is running.
- the vehicle is rolling.
- the automatic transmission is in selector lever position **N**.
- you are driving no faster than 43 mph (70 km/h).

You could otherwise damage the transfer case.

▶ Push the transfer case switch to **HIGH**. When the shift procedure is complete, the H transfer case position appears in the multifunction display.

If the gear change is not completed, the following messages could appear in the display:

- TC shift conditions not fulfilled
  You have not met one or more shift conditions.
- TC in neutral
  The transfer case has canceled the gear change process and is in **N**. The N transfer case position appears in the multifunction display.

⚠ **WARNING**
If the transfer case is in **Neutral**, the park position **P** of the automatic transmission will not hold the vehicle. The parking brake must be engaged to hold the vehicle in place.

- TC shift procedure canceled
  The transfer case has not performed the gear change process.

▶ Carry out the gear change process again.
Make sure to meet all conditions for changing gears.

- Transfer case Consult workshop
  There is a malfunction in the transfer case.

▶ Do not shift the transfer case.

▶ Have the vehicle checked as soon as possible at a qualified specialist workshop.

Shifting to neutral

⚠ **WARNING**
If the transfer case is in **Neutral**, the park position **P** of the automatic transmission will not hold the vehicle. The parking brake must be engaged to hold the vehicle in place.

▶ Turn the SmartKey to position **2** in the ignition lock.

▶ Apply the parking brake.

▶ Depress the brake pedal.

▶ Move the selector lever to position **N** (▷ page 120).

▶ Push the transfer case switch to **LOW** for about 30 seconds.
When the shift procedure is complete, the N transfer case position appears in the multifunction display.

ℹ If the transfer case is in **N**, the SmartKey is in the ignition lock and you open the driver's door, the TC in neutral message appears in the multifunction display. If you then release the parking brake, a warning tone will sound.

Differential locks

General information

Differential locks improve the traction of the vehicle.

⚠ **WARNING**

Never drive on firm road surfaces with differential locks engaged. Never drive on narrow bends with front-axle differential locks engaged. With differential locks engaged, the vehicle's ability to steer is severely restricted and the danger of accidents is therefore higher.

Do not engage or disengage differential locks while driving on a bend. The vehicle may otherwise make a jerking movement. You could thus lose control of the vehicle and cause an accident.

If you select a differential lock, ABS, 4ETS, ESP® and BAS will be deactivated.

Your vehicle is equipped with a differential lock for:

- the transfer case: this controls the balance between the front and rear axles.
- the rear axle: this controls the balance between the wheels on the rear axle.
- the front axle: this controls the balance between the wheels on the front axle.

! In order to avoid damage to the transfer case, you must operate the vehicle on a dynamometer (1-axle dynamometer) only if:

- the axle not driven on is jacked up

  or
- the corresponding propeller shaft is disconnected

  and
- the differential lock of the transfer case is engaged.

Otherwise, the transfer case can be damaged.

Information about differentials and differential locks

When the vehicle drives around a corner, the wheels on the outside of the bend must cover a greater distance. Therefore, the wheels turn more rapidly than on the inside. The differential, a transmission in the drivetrain, balances out the different rotational speeds and therefore enables driving through bends.

The disadvantage of a differential is that more power is transferred to the wheels that have the least grip. Example: a wheel on a driven axle stands on snow-covered ground and thus has no traction. This wheel receives the strongest driving power from the differential, as the force progression takes the path of least resistance. The opposite wheel on this axle, however, which stands on firm ground and could therefore allow propulsion, receives no driving power. 4ETS eliminates this disadvantage. It provides good steerability by automatically braking the spinning wheel. As a result, 4ETS directs more driving power to the wheel standing on firm ground, which is therefore able to provide propulsion.

ESP® and 4ETS are traction systems that are ideal for road driving and suitable for light off-road driving. Off-road gear **LOW** likewise improves off-road capabilities.

Moreover, the more difficult conditions in off-road driving require further measures such as locking one or several differentials. Your vehicle is equipped with three differential locks:

- a central differential lock for the transfer case,
- a differential lock for the front axle and
- a differential lock for the rear axle.

Each differential lock can be engaged with the respective switch on the center console. When the central differential lock for the transfer case is locked, the speed of the front wheels is equal to that of the rear wheels. When the differential for the rear axle is locked, both rear wheels turn equally fast,

independent of their respective torques. Keep in mind that by engaging the differential locks, vehicle steerability is severely restricted.

For your own safety, the safety of others and to prevent damage to your vehicle, the differential locks must not be activated on paved roads. Keep in mind that when driving on firm road surfaces, the function of the differentials is necessary and therefore they must never be locked on firm road surfaces. The steerability of the vehicle would otherwise be lost and steering would no longer be possible. For this reason, the differential locks must be engaged exclusively during off-road driving, and only when activating the other driving systems (4ETS, ESP® and **LOW** range off-road gear) is no longer sufficient.

Activating the differential lock

General information

⚠ **WARNING**

Never drive on firm road surfaces with differential locks engaged. Never drive on narrow bends with front-axle differential locks engaged. With differential locks engaged, the vehicle's ability to steer is severely restricted and the danger of accidents is therefore higher.

Do not engage or disengage differential locks while driving on a bend. The vehicle may otherwise make a jerking movement. You could thus lose control of the vehicle and cause an accident.

If you select a differential lock, ABS, 4ETS, ESP® and BAS will be deactivated.

Activate the differential locks:

- off-road
- to deactivate ABS, 4ETS, ESP® and BAS while off-road
- when fording

For further information on driving off-road, see (▷ page 134).

The switches are located on the center console.

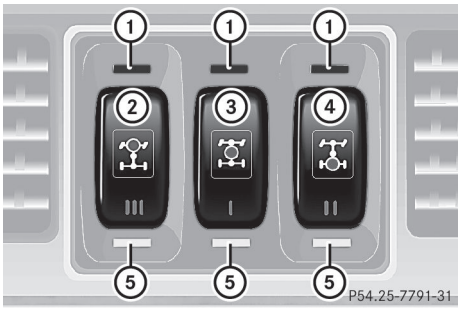

①	Function indicator lamps (red)
②	Differential lock for the front axle
③	Differential lock for the transfer case
④	Differential lock for the rear axle
⑤	Activation indicator lamps (yellow)

! Only activate the differential locks when:

- you are driving at walking pace.
- the driven wheels are not spinning.
- you are not driving on a firm road surface.

ℹ You can only engage the differential locks when the transfer case is in **LOW** range off-road gear (▷ page 145).

ℹ You can activate the differential locks in the following order ③, ④, ②.

Differential lock for the transfer case

▶ **To engage:** switch the transfer case to off-road gear **LOW**(▷ page 145).

▶ Press switch ③.

The yellow activation indicator lamp under switch ③ lights up when the transfer case is in off-road gear **LOW**.

The [OFF] warning lamp in the instrument panel lights up.

The red function indicator lamp above switch ③ lights up when the differential is locked.

In the multifunction display you see the:

ABS not available Differential Locked message.

The [OFF] [ABS] [⚠] warning lamps light up in the instrument cluster.

The differential lock for the transfer case is engaged.

4ETS, ESP®, BAS and ABS are deactivated.

The vehicle's ability to steer is severely restricted. Drive carefully and accelerate gently for optimum traction.

ℹ You can now engage differential lock for the rear axle ④ and differential lock for the front axle ② as desired.

Differential lock for the rear axle

▶ **To engage:** press switch ④.

First, the yellow activation indicator lamp lights up, followed by the red function indicator lamp.

The differential lock for the rear axle is engaged.

Differential lock for the front axle

▶ **To engage:** press switch ②.

First, the yellow activation indicator lamp lights up, followed by the red function indicator lamp.

The differential lock for the front axle is engaged.

Deactivating the differential lock

You can deactivate the differential locks in the reverse order: ②, ④, ③.

▶ **To simultaneously deactivate all differential locks:** press switch ③.

Yellow activation indicator lamps ⑤ go out. Red function indicator lamps ① go out once the differential locks have disengaged.

After approximately three seconds of normal driving, ABS, 4ETS, ESP® and BAS are activated.

The ABS not available Differential Locked message disappears from the multifunction display and the [OFF], [ABS] and [⚠] warning lamps in the instrument cluster go out.

▶ Switch the transfer case to road gear **HIGH**(▷ page 145).

ℹ If red function indicator lamps ① do not go out when you disengage the differential locks, bring the vehicle to a stop, while paying attention to road and traffic conditions, then begin driving again. The load change can disengage the differential locks.

⚠ **WARNING**

Always remember to disengage the differential locks when returning to drive on paved roads, see "A few words about differentials and differential locks".

Useful information 152
Important safety notes 152
Displays and operation 152
Menus and submenus 155
Display messages 165
Warning and indicator lamps in the instrument cluster 178

Useful information

ℹ This Operator's Manual describes all models and all standard and optional equipment of your vehicle available at the time of publication of the Operator's Manual. Country-specific differences are possible. Please note that your vehicle may not be equipped with all features described. This also applies to safety-related systems and functions.

ℹ Please read the information on qualified specialist workshops (▷ page 20).

Important safety notes

You will find an illustration of the instrument cluster in the "At a glance" section (▷ page 25).

⚠ **WARNING**

A driver's attention to the road and traffic conditions must always be his/her primary focus when driving.

For your safety and the safety of others, selecting features through the multifunction steering wheel should only be done by the driver when traffic and road conditions permit it to be done safely.

Bear in mind that at a speed of just 30 mph (approximately 50 km/h), your vehicle is covering a distance of 44 feet (approximately 14 m) every second.

⚠ **WARNING**

No messages will be displayed if either the instrument cluster or the multifunction display is inoperative.

As a result, you will not be able to see information about your driving conditions, such as

- speed
- outside temperature
- warning/indicator lamps
- malfunction/warning messages
- failure of any systems

Driving characteristics may be impaired.

If you must continue to drive, do so with added caution. Contact an authorized Mercedes-Benz Center as soon as possible.

⚠ **WARNING**

Malfunction and warning messages are only displayed for certain systems and are intentionally not very detailed. The malfunction and warning messages are simply a reminder with respect to the operation of certain systems. They do not replace the owner's and/or driver's responsibility to maintain the vehicle's operating safety. Have all required maintenance services and safety checks performed on the vehicle. Bring the vehicle to an authorized Mercedes-Benz Center to address the malfunction and warning messages.

Displays and operation

Tachometer

The red band in the tachometer indicates the engine's overrevving range.

! Do not drive in the overrevving range, as this could damage the engine.

The fuel supply is interrupted to protect the engine when the red band is reached.

Displaying the coolant temperature

⚠ **WARNING**

Driving when your engine is overheated can cause some fluids which may have leaked into the engine compartment to catch fire. You could be seriously burned.

Steam from an overheated engine can cause serious burns which can occur just by opening

the engine hood. Stay away from the engine if you see or hear steam coming from it.

Stop the vehicle in a safe location away from other traffic. Turn off the engine, get out of the vehicle and do not stand near the vehicle until the engine has cooled down.

The coolant temperature gauge is in the instrument cluster on the left-hand side.

Under normal driving conditions, with the correct anti-corrosion and antifreeze additive concentration, the reading may rise to 248 °F(120 °C).

! If the coolant temperature exceeds 248 °F(120 °C) do not continue driving. The engine will otherwise be damaged.

Outside temperature display

The outside temperature display is in the multifunction display (▷ page 154).

⚠ WARNING

The outside temperature indicator is not designed to serve as an ice-warning device and is therefore unsuitable for that purpose.

Indicated temperatures just above the freezing point do not guarantee that the road surface is free of ice. The road may still be icy, especially in wooded areas or on bridges.

Changes in the outside temperature are displayed after a short delay.

Operating the on-board computer

The on-board computer is activated as soon as you turn the SmartKey to position **1** in the ignition lock.

You can control the multifunction display and the settings in the on-board computer using the buttons on the multifunction steering wheel.

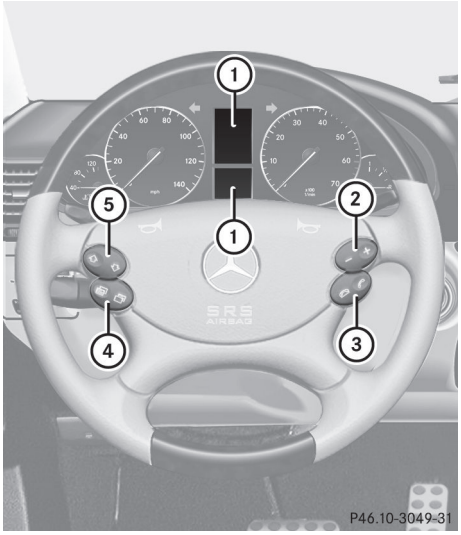

①	Multifunction display
②	[+] [−] Selects submenus in the Settings menu Changes values Adjusts the volume
③	[☎] Rejects or ends a call Exits phone book/redial memory [☎] Makes or accepts a call Switches to the redial memory
④	[⇧] [⇩] Selects a menu: scrolls back and forth

⑤	 **Press briefly:** Scrolls back and forth within a menu In the **Audio** menu: selects a stored station, an audio track or a video scene In the **Telephone** menu: switches to the phone book and selects a name or a telephone number
	 Press and hold: In the **Audio** menu: selects the previous/next station or selects an audio track using rapid scrolling In the **Telephone** menu: starts rapid scrolling through the phone book

Multifunction display

To activate the multifunction display:

- switch on the ignition.
- switch on the lights.
- open the door.
- press the reset button on the instrument cluster.

The multifunction display shows you values and settings as well as possible messages.

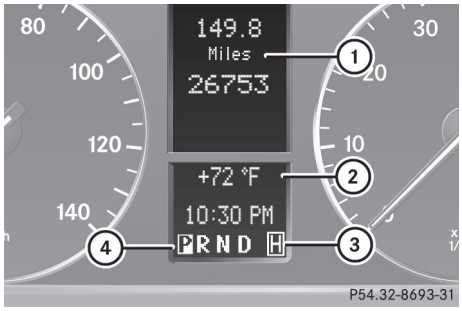

① Display area for menus or submenus

② Status bar with outside temperature or speed (▷ page 159)

③ Transfer case position

④ Selector lever position/shift range

For further information on displaying the transmission position, see (▷ page 120).

Menus and submenus

Overview of menus

The number of menus shown depends on the optional equipment in the vehicle.

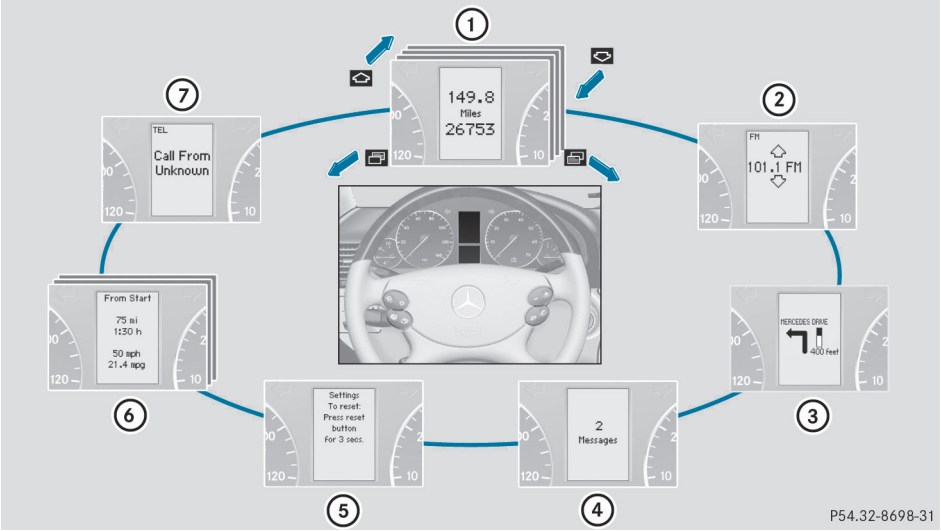

	Function
①	**Standard display** menu (▷ page 156) • tire pressure monitor (▷ page 249) • service interval display (▷ page 215) • G 55 AMG: oil level (▷ page 211)
②	**Audio** menu (▷ page 156)
③	**Navigation** menu (▷ page 158)
④	**Message memory**[9] menu (▷ page 165)
⑤	**Settings** menu (▷ page 158)
⑥	**Trip computer** menu (▷ page 162)
⑦	**Telephone** menu (▷ page 163)

9 The menu is only visible when there is a display message.

Standard display menu

Standard display

▶ Press the [ ] or [ ] button on the steering wheel to select the standard display.

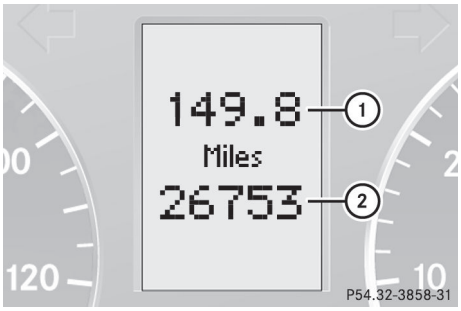

Standard display
① Trip odometer
② Odometer

You can select the following functions in the **Standard display** menu using the [△] or [▽] button:

- tire pressure monitor (▷ page 249)
- digital speedometer or outside temperature (▷ page 156)
- Service display (▷ page 215)
- **G 55 AMG:** oil level (▷ page 211)

▶ **To reset the trip odometer:** press and hold the reset button in the instrument cluster until the trip odometer is reset.

Displaying the digital speedometer or outside temperature

If you have selected the digital speedometer as the status line (▷ page 159), the outside temperature is displayed here[10].

⚠ **WARNING**
The outside temperature indicator is not designed to serve as an ice-warning device and is therefore unsuitable for that purpose.

Indicated temperatures just above the freezing point do not guarantee that the road surface is free of ice. The road may still be icy, especially in wooded areas or on bridges.

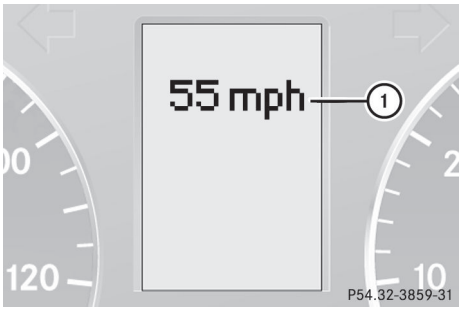

Digital speedometer (example)

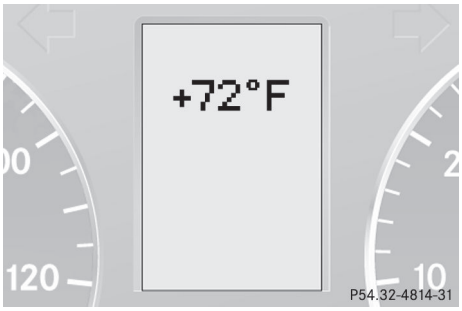

Outside temperature (example)

▶ Press the [ ] or [ ] button on the steering wheel to select the standard display.

▶ Press the [△] or [▽] button on the steering to select digital speedometer ① or the outside temperature.

Audio menu

Selecting a radio station

ℹ SIRIUS XM satellite radio acts like a normal radio.
For more information on satellite radio operation, see the separate operating instructions.

[10] Vehicles for the United Kingdom: the outside temperature is always displayed.

You can only change the waveband and store new stations using COMAND.

▶ Switch on COMAND and select Radio (see the separate operating instructions).

▶ Press the [ ] or [ ] button on the steering wheel to select the **Audio** menu.

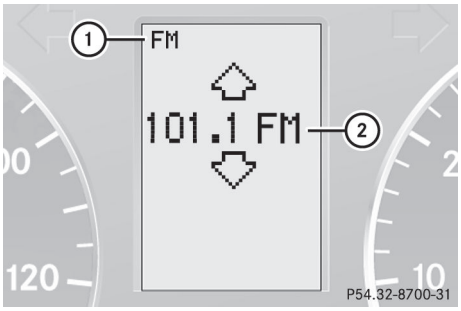

① Waveband

② Current station

▶ **To select a stored station:** briefly press the [△] or [▽] button.

▶ **To select a station from the station list:** press and briefly hold the [△] or [▽] button.

▶ **To select a station using station search**[11]**:** press and briefly hold the [△] or [▽] button.

Operating audio devices or media

▶ Switch on COMAND and select the audio device or medium (see the separate operating instructions).

▶ Press the [ ] or [ ] button on the steering wheel to select the **Audio** menu.

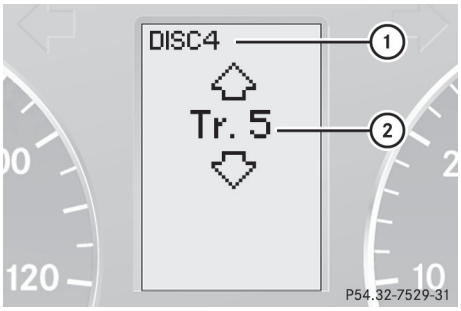

COMAND display (example)

① Current CD (for CD/DVD changer)

② Current track

▶ **To select the next/previous track:** briefly press the [△] or [▽] button.

▶ **To select a track from the track list (rapid scrolling):** press and briefly hold the [△] or [▽] button.

The current track does not appear in audio AUX mode (**Aux**iliary audio mode: external audio source connected).

Video DVD operation

▶ Switch on COMAND and select video DVD (see the separate operating instructions).

▶ Press the [ ] or [ ] button on the steering wheel to select the **Audio** menu.

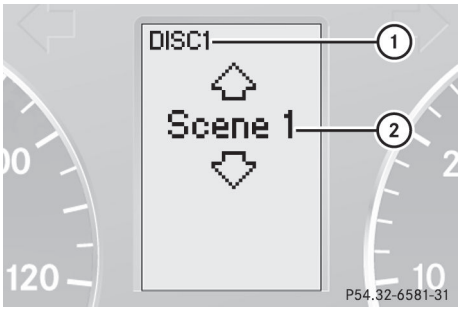

DVD changer display (example)

① Current DVD (for DVD changer)

② Current scene

[11] Only if no station list is received.

▶ Press the ⇧ or ⇩ button to select a scene.

Navigation system menu

Displaying navigation instructions

In the **Navigation** menu: the instructions from the navigation system appear in the multifunction display. For more information, see the separate operating instructions.

▶ Switch on COMAND (see the separate operating instructions).

▶ Press the ⊟ or ⊟ button on the steering wheel to select the **Navigation** menu.

Route guidance inactive

The direction of travel appears in the multifunction display. If the name of the street is part of the navigation system data, this will also be displayed.

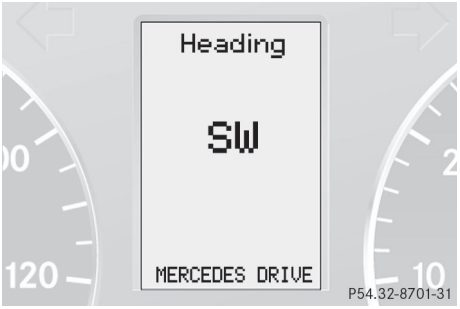

Route guidance active

The multifunction display shows navigation instructions, for example:

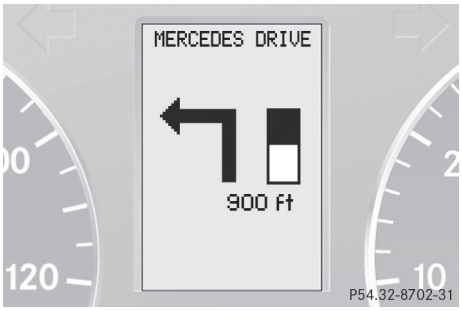

Settings menu

Introduction

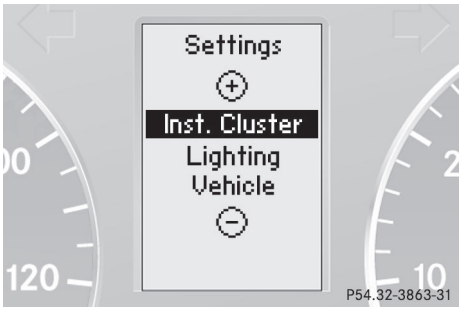

In the Settings menu, you have the following options:

- restoring the factory settings
- changing the instrument cluster settings
- changing the light settings
- changing the vehicle settings
- changing the convenience settings

Resetting to factory settings

For safety reasons, not all functions are reset: the Headlamp mode function in the Lighting submenu is only reset if the vehicle is stationary.

- ▶ Press the [ ] or [ ] button on the steering wheel to select the Settings menu.
- ▶ Press and hold the reset button on the left of the instrument cluster for approximately three seconds.
  A prompt appears in the multifunction display asking you to confirm by pressing the reset button again.
- ▶ Press the reset button again.
  The settings of most functions are restored to the factory settings.

or

- ▶ If you want to retain the settings, do not press the reset button a second time.
  The Settings menu appears again after approximately five seconds.
- ▶ Press the [ ] or [ ] button to select a different menu.

Instrument cluster

Selecting the unit of measurement for distance

The selected unit of measurement for distance applies to:

- the odometer and the trip odometer
- the trip computer
- the digital speedometer

- ▶ Press the [ ] or [ ] button on the steering wheel to select the Settings menu.
- ▶ Press the [ ] button to select submenus.
- ▶ Press the [+] or [–] button to select the Inst. Cluster submenu.
- ▶ Press the [ ] button to select Disp. Unit Speed-/Odom.
- ▶ Press the [+] or [–] button to select Km (kilometers) or Miles as the unit of measurement for distance.
- ▶ Press the [ ], [ ] or [ ] button to select a different display.

Selecting the language

The Language function allows you to select the language for the instrument cluster.

- ▶ Press the [ ] or [ ] button on the steering wheel to select the Settings menu.
- ▶ Press the [ ] button to select submenus.
- ▶ Press the [+] or [–] button to select the Inst. cluster submenu.
- ▶ Press the [ ] button to select Language.
- ▶ Press the [+] or [–] button to select the desired language.
- ▶ Press the [ ], [ ] or [ ] button to select a different display.

Selecting the status line display

- ▶ Press the [ ] or [ ] button on the steering wheel to select the Settings menu.
- ▶ Press the [ ] button to select submenus.
- ▶ Press the [+] or [–] button to select the Inst. cluster submenu.
- ▶ Press the [ ] button to select Status line display.
- ▶ Press the [+] or [–] button to select the status line display: speed (Speed) or outside temperature (Outside temp.).
  The selected display now appears constantly in the lower multifunction display. When you scroll through the **Standard display** menu (▷ page 156), you will see the display you have not selected.
- ▶ Press the [ ], [ ] or [ ] button to select a different display.

Lights

Adjusting the instrument cluster lighting

The instrument cluster lighting automatically adjusts to the ambient light.

- ▶ **To brighten or to dim:** turn reset button (▷ page 25) clockwise or counterclockwise.

Switching the daytime running lamps on/off

This function is not available in Canada.

If you have activated the daytime running lamps function and the light switch is in the 0 or AUTO position, the low-beam headlamps are switched on automatically when the engine is running.

In the dark, the following also light up:

- the low-beam headlamps
- the standing lamps
- the tail lamps
- the license plate lamp
- the side marker lamp

In countries where daytime running lamps are legally required, Constant is the factory setting.

▶ Press the ⊟ or ⊟ button on the steering wheel to select the Settings menu.

▶ Press the △ button to select submenus.

▶ Press the + or − button to select the Lighting submenu.

▶ Press the △ button to select Headlamp mode.

▶ Press the + or − button to set the mode for the headlamps to Manual or Constant (daytime running lamps).

▶ Press the △, ⊟ or ⊟ button to select a different display.

Switching the surround lighting on or off

If you activate the surround lighting function and the light switch is set to AUTO, the following will light up if it is dark and you unlock the vehicle using the SmartKey:

- the standing lamps
- the license plate lamp
- the tail lamps
- the fog lamps
- the side marker lamp

The surround lighting switches off automatically after 40 seconds or when the driver's door is opened.

▶ Press the ⊟ or ⊟ button on the steering wheel to select the Settings menu.

▶ Press the △ button to select submenus.

▶ Press the + or − button to select the Lighting submenu.

▶ Press the △ button to select Surround lighting.

▶ Press the + or − button to switch the Surround lighting on or off.

▶ When leaving the vehicle, turn the light switch to position AUTO.
The surround lighting is activated.

▶ Press the △, ⊟ or ⊟ button to select a different display.

Activating/deactivating the exterior lighting delayed switch-off

If you have activated the delayed switch-off function, the light switch is set to AUTO and you switch off the engine, the following remain lit:

- the standing lamps
- the license plate lamp
- the tail lamps
- the fog lamps
- the side marker lamp

If the engine is switched off and then none of the doors are opened, or if an open door is not closed, the exterior lighting goes out after 60 seconds.

▶ Press the ⊟ or ⊟ button on the steering wheel to select the Settings menu.

▶ Press the △ button to select submenus.

▶ Press the + or − button to select the Lighting submenu.

▶ Press the △ button to select Headl. Delayed Switch Off.

- Press the [+] or [−] button to activate or deactivate the Headl. Delayed Switch Off function.
- Before switching off the engine, turn the light switch to position [AUTO].
  The exterior lighting delayed switch-off is activated.
- Press the [△], [⊟] or [⊟] button to select a different display.

Deactivating the delayed switch-off temporarily:

- Before leaving the vehicle, turn the SmartKey to position **0** in the ignition lock.
- Turn the SmartKey to position **2** in the ignition lock and back to position **0**.
  The delayed switch-off is deactivated.

Delayed switch-off is reactivated the next time you start the engine.

Activating/deactivating the interior lighting delayed switch-off

If the Interior Light. Delay. Sw. Off: function is activated and you pull the SmartKey out of the ignition lock, the interior lighting remains on for around 10 seconds.

- Press the [⊟] or [⊟] button on the steering wheel to select the Settings menu.
- Press the [△] button to select submenus.
- Press the [+] or [−] button to select the Lighting submenu.
- Press the [△] button to select Interior Light. Delay Sw. Off.
- Press the [+] or [−] button to activate or deactivate Interior Light. Delay. Sw. Off.
- Press the [△], [⊟] or [⊟] button to select a different display.

Vehicle

Activating/deactivating the automatic door locking feature

If you select the Automatic Locking function, the vehicle is centrally locked above a speed of around 9 mph (15 km/h).

ℹ For more information on the automatic locking feature, see (▷ page 66).

- Press the [⊟] or [⊟] button on the steering wheel to select the Settings menu.
- Press the [△] button to select submenus.
- Press the [+] or [−] button to select the Vehicle submenu.
- Press the [△] button to select Automatic Door Lock.
- Press the [+] or [−] button to switch the Automatic Door Lock feature on or off.
- Press the [△], [⊟] or [⊟] button to select a different display.

Convenience

Activating/deactivating the EASY-ENTRY/EXIT feature

You can use the Easy-entry Function to activate or deactivate the EASY-ENTRY/EXIT feature (▷ page 83).

⚠ **WARNING**

You must make sure no one can become trapped or injured by the moving steering wheel when the easy-entry/exit feature is activated.

To stop steering wheel movement do one of the following:

- Move steering wheel adjustment stalk.
- Press one of the memory position buttons.
- Press the memory button.

Do not leave children unattended in the vehicle, or with access to an unlocked vehicle. Children could open the driver's door and

▷▷

unintentionally activate the easy-entry/exit feature, which could result in an accident and/or serious personal injury.

- Press the [ ] or [ ] button on the steering wheel to select the Settings menu.
- Press the [ ] button to select submenus.
- Press the [+] or [–] button to select the Convenience submenu.
- Press the [ ] button to select the Easy-entry Function.
- Press the [+] or [–] button to activate or deactivate the Easy-entry Function.
- Press the [ ], [ ] or [ ] button to select a different display.

Trip computer menu

Trip computer "From start" or "From reset"

The values in the From Start submenu are calculated from the start of a journey, whereas the values in the From Reset submenu are calculated from the last time the submenu was reset.

- Press the [ ] or [ ] button to select From Start.

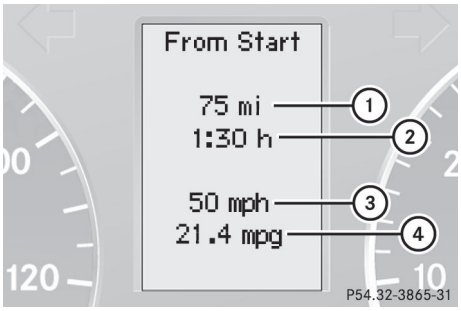

Example: trip computer "From start"

① Distance

② Time

③ Average speed

④ Average fuel consumption

- Press the [ ] button to select From Start or the [ ] button to select From Reset in the submenu.

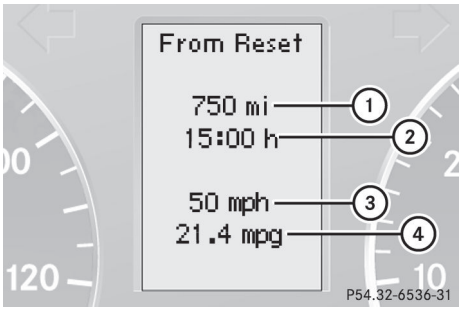

Example: trip computer "From reset"

① Distance

② Time

③ Average speed

④ Average fuel consumption

The trip computer From Start is automatically reset if:

- the ignition has been switched off for more than four hours.
- 999 hours have been exceeded.
- 9,999 miles have been exceeded.

If 9,999 hours or 99,999 kilometers are exceeded, the trip computer From Reset is automatically reset.

Resetting

- Press the [ ] or [ ] button to select From Start.
- Press the [ ] or [ ] button to select the function that you wish to reset.
- Press and hold the reset button on the left of the instrument cluster until the values have reverted to "0".

Calling up the range

▶ Press the ⊟ or ⊟ button to select From Start.

▶ Press the △ or ▽ button to select Range:.
The multifunction display shows the estimated range of the vehicle, based on the current driving style and the fuel level. If there is only a small amount of fuel remaining in the fuel tank, a gas pump ⛽ appears instead of the range.

Telephone menu

Introduction

You can establish a Bluetooth® connection to COMAND (see the separate operating instructions).

⚠ **WARNING**

A driver's attention to the road must always be his/her primary focus when driving. For your safety and the safety of others, we recommend that you pull over to a safe location and stop before placing or taking a telephone call. If you choose to use the telephone while driving, please use the hands-free device and only use the telephone when weather, road and traffic conditions permit.

Some jurisdictions prohibit the driver from using a mobile phone while driving a vehicle.

Bear in mind that at a speed of just 30 mph (approximately 50 km/h), your vehicle is covering a distance of 44 feet (approximately 14 m) every second.

▶ Switch on the mobile phone and COMAND (see the separate operating instructions).

▶ Press the ⊟ or ⊟ button on the steering wheel to select the **Telephone** menu.

You will see one of the following display messages in the multifunction display:

- Ready or the name of the network provider: the mobile phone has found a network and is ready to receive.
- Bluetooth Ready: the mobile phone is not yet connected via Bluetooth® to COMAND.
- No Service: no network is available.

Accepting a call

If someone calls you when you are in the **Telephone** menu, a display message appears in the multifunction display, for example:

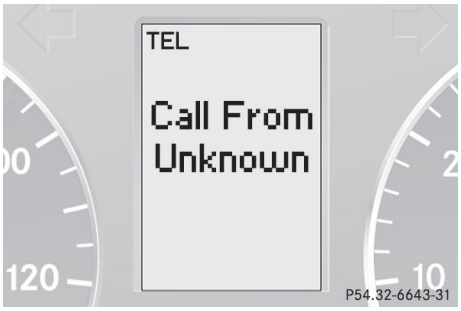

COMAND display (example)

▶ Press the ☎ button on the steering wheel to accept an incoming call.

If you are not in the **Telephone** menu, you can still accept a call.

Rejecting or ending a call

▶ Press the ☎ button on the steering wheel.

If you are not in the **Telephone** menu, you can still accept a call.

Dialing a number from the phone book

You can enter new telephone numbers into the phone book via the mobile phone (see the separate operating instructions). If your mobile phone is operational, you can select and dial a number from the phone book at any time.

- Press the [ ] or [ ] button on the steering wheel to select the **Telephone** menu.
- Press the [ ] or [ ] button to select the desired name.

  To start scrolling rapidly, press and hold the [ ] or [ ] button for longer than one second.
- Press [ ] to start dialing.

  The multifunction display shows the `Connecting call` display message.

  The number dialed is stored in the redial memory.

  If the call is connected, the call duration appears in the multifunction display. If it is stored in the phone book, the name is also displayed. Otherwise, the number dialed is displayed.

or

- If you do not want to make a call, press the [ ] button.

Redialing

The on-board computer stores the last phone numbers which have been dialed.

- Press the [ ] or [ ] button on the steering wheel to select the **Telephone** menu.
- Press the [ ] button to switch to the redial memory.
- Press the [ ] or [ ] button to select the desired name or number.
- Press [ ] to start dialing.

Display messages

General notes

⚠ **WARNING**

All categories of messages contain important information which should be taken note of and, where a malfunction is indicated, addressed as soon as possible at an authorized Mercedes-Benz Center.

Failure to repair the condition noted may cause damage not covered by the Mercedes-Benz Limited Warranty, or result in property damage or personal injury.

Display messages appear in the multifunction display.

Display messages with graphic displays may be shown in simplified form in the Operator's Manual and may differ from the messages shown in the multifunction display.

Please respond in accordance with the display messages and follow the additional notes in this Operator's Manual.

Certain display messages are accompanied by an audible warning tone or a continuous tone.

Hiding display messages

You can hide some display messages with a low priority.

▶ Press the [ ], [ ], [△] or [▽] button on the steering wheel to select another display.

or

▶ Press the reset button on the instrument cluster (▷ page 25).
The display message is cleared.

Display messages with a high priority are shown in red.

You cannot hide display messages of the highest priority. The multifunction display shows these messages continuously until the causes for the messages have been remedied.

Message memory menu

The on-board computer saves certain display messages. You can call up the display messages in the **message memory** menu.

The **message memory** menu is only shown if any display messages have been stored.

▶ Press the [ ] or [ ] button repeatedly, until either the original menu or the **message memory** menu is shown.
If there are display messages, the multifunction display shows 2 Messages, for example.

▶ Press the [△] or [▽] button to scroll through the display messages.

When the ignition is switched off, all display messages are deleted apart from some high-priority display messages. Once the causes of the high-priority display messages have been rectified, the corresponding display messages are also deleted.

Safety systems	
Display messages	**Possible causes/consequences and ▶ Solutions**
ESP Inoperative See Operator's Manual	⚠ **Risk of accident** ESP® (Electronic Stability Program) is not available due to a malfunction. ABS (Anti-lock Brake System), BAS (Brake Assist), EBD (electronic brake force distribution), 4ETS (Electronic Traction System) and the tire pressure monitor have also been deactivated. The brake system continues to function normally, but without the functions listed above. ▶ Drive on carefully. ▶ Visit a qualified specialist workshop immediately.
ABS ABS not available Differential Locked	You have engaged the differential locks. ▶ Disengage the differential locks. Subsequently ABS is reactivated.
ABS Inoperative See Oper. Manual	⚠ **Risk of accident** ABS and ESP® are not available due to a malfunction. BAS, EBD and 4ETS have also been deactivated. The brake system continues to function normally, but without the functions listed above. The wheels could therefore lock if you brake hard, for example. ▶ Drive on carefully. ▶ Visit a qualified specialist workshop immediately.
BRAKE (USA only) (P) (Canada only) Release Parking Brake	You are driving with the parking brake applied. ▶ Release the parking brake.
BRAKE (USA only) (!) (Canada only) Check Brake Fluid Level	⚠ **Risk of accident** There is insufficient brake fluid in the brake fluid reservoir. ▶ Pull over as soon as it is safe to do so. ▶ Do not continue driving under any circumstances. ▶ Engage the parking brake. ▶ Consult a qualified specialist workshop. ▶ Do not add brake fluid. This will not rectify the malfunction.

⚠ **WARNING**

Driving with the message Check Brake Fluid Level displayed can result in an accident. Have your brake system checked immediately.

Do not add brake fluid before checking the brake system. Overfilling the brake fluid reservoir can result in spilling brake fluid on hot engine parts and the brake fluid catching fire. You can be seriously burned.

Display messages	Possible causes/consequences and ▶ Solutions
Brake Wear	The brake pads/linings have reached their wear limit. ▶ Have the brake pads/linings replaced as soon as possible at a qualified specialist workshop.
SOS Tele Aid Inoperative	USA only: one or more main functions of the mbrace system are malfunctioning. Canada only: one or more main functions of the TELEAID system are malfunctioning. ▶ USA only: have the mbrace system checked at a qualified specialist workshop. ▶ Canada only: have the TELEAID system checked at a qualified specialist workshop.
SRS Restraint System Malfunction Service Required	⚠ **Risk of injury** The restraint systems are malfunctioning. ▶ Visit a qualified specialist workshop immediately.

⚠ **WARNING**

In the event a malfunction of the SRS is indicated as outlined above, the SRS may not be operational.

For your safety, we strongly recommend that you contact an authorized Mercedes-Benz Center immediately to have the system checked. Otherwise the SRS may not be activated when needed in an accident, which could result in serious or fatal injury, or it might deploy unexpectedly and unnecessarily which could also result in injury.

Lights	
Display messages	**Possible causes/consequences and ▶ Solutions**
Low-Beam Left or Low-Beam Right	The left or right-hand low-beam headlamp is defective. ▶ Visit a qualified specialist workshop.
AUTO-Light Inoperative	The light sensor is defective. The low-beam headlamps are switched on. ▶ USA only: set the lights to manual operation in the on-board computer (▷ page 160). ▶ Switch the lights on and off using the light switch. ▶ Visit a qualified specialist workshop.
Turn signal rear left Back-up bulb on or Turn signal rear right Back-up bulb on	The rear left-hand or rear right-hand turn signal is defective. Another lamp has taken over its function. ▶ Replace the bulb (▷ page 94).
Turn signal left mirror or Turn signal right mirror	The turn signal in the left-hand or right-hand exterior mirror is defective. These messages will only appear if all of the turn signal's LEDs have failed. ▶ Visit a qualified specialist workshop.
Turn signal front left Back-up bulb on or Turn signal front right Back-up bulb on	The front left-hand or front right-hand turn signal is defective. Another lamp has taken over its function. ▶ Replace the bulb (▷ page 94).
Brake lamp left or Brake lamp right	The left or right-hand brake lamp is defective. ▶ Replace the bulb (▷ page 94).
High-mounted brake lamp	The high-mounted brake lamp is faulty. This message will only appear if all of the brake lamp's LEDs have failed. ▶ Visit a qualified specialist workshop.

Display messages	Possible causes/consequences and ▶ Solutions
High-beam left or High-beam right	The left or right-hand high beam is defective. ▶ Visit a qualified specialist workshop.
License Plate Lamp, Left or License Plate Lamp, Right	There is a short circuit in the LED lamps. The LEDs have been switched off. ▶ Visit a qualified specialist workshop. ℹ Individual segments of the LED lamps may fail without a display message being shown in the multifunction display. Regularly check the license plate lamp. If necessary, visit a qualified specialist workshop.
Switch off lights or remove key	You have left the SmartKey in the ignition lock. ▶ Remove the SmartKey from the ignition lock.
Switch Off Lights	The lights are still switched on when you leave the vehicle. ▶ Turn the light switch to 0 or AUTO (▷ page 88).
Fog lamp left or fog lamp right	The left-hand or right-hand front fog lamp is defective. ▶ Replace the bulb (▷ page 94).
Front Left Side Marker Lamp or Front Right Side Marker Lamp	The left or right front side marker lamp is defective. ▶ Replace the bulb (▷ page 94).
Rear fog lamp Back-up bulb on	The rear fog lamp is defective. Another lamp has taken over its function. ▶ Replace the bulb (▷ page 94).
Standing lamp front left Back-up bulb on or standing lamp front right Back-up bulb on	The front left-hand or front right-hand standing lamp is faulty. Another lamp has taken over its function. ▶ Visit a qualified specialist workshop.

Display messages	Possible causes/consequences and ▶ Solutions
Reversing lamp right	The backup lamp is faulty. ▶ Replace the bulb (▷ page 94).
Tail lamp left Back-up bulb on or Tail lamp right Back-up bulb on	The left or right-hand tail lamp is faulty. Another lamp has taken over its function. ▶ Replace the bulb (▷ page 98).

Engine

Display messages	Possible causes/consequences and ▶ Solutions
	Some electronic systems are unable to send information to the on-board computer. The coolant temperature gauge and the tachometer could be malfunctioning. ▶ Visit a qualified specialist workshop.
Top Up Coolant See Operator's Manual	The coolant level is too low. ▶ Add coolant, following the warning notes when doing so (▷ page 213). ▶ If coolant needs to be added more often than usual, have the engine coolant system checked at a qualified specialist workshop.

⚠ **WARNING**

Do not spill antifreeze on hot engine parts. Antifreeze contains ethylene glycol which may burn if it comes into contact with hot engine parts. You could be seriously burned.

! The coolant level is too low. Avoid making long journeys with too little coolant in the cooling system. The engine will otherwise be damaged.

The display messages and the corresponding symbol that indicate that the coolant level is too low must not be ignored.

Display messages	Possible causes/consequences and ▶ Solutions
Coolant Stop, Turn Engine Off	The coolant is too hot. ▶ Pull over and stop the vehicle safely and switch off the engine, paying attention to road and traffic conditions. ▶ Make sure that the air supply to the radiator is not blocked, e.g. by snow, slush or ice. ▶ Wait until the display message disappears before restarting the engine. Otherwise, there is a risk of engine damage. ▶ Pay attention to the coolant temperature display. ▶ If the temperature increases again, visit a qualified specialist workshop immediately.
	The poly-V-belt may have torn. ▶ Pull over and stop the vehicle safely and switch off the engine, paying attention to road and traffic conditions. ▶ Open the hood. ▶ Check whether the poly-V-belt is torn. **If the poly-V-belt is torn:** ! Do not continue driving. The engine could otherwise overheat. ▶ Consult a qualified specialist workshop. **If the poly-V-belt is not damaged:** ▶ Wait until the display message disappears before restarting the engine. Otherwise, there is a risk of engine damage. ▶ Pay attention to the coolant temperature display. ▶ Visit a qualified specialist workshop.

⚠ **WARNING**

Driving when your engine is overheated can cause some fluids which may have leaked into the engine compartment to catch fire. You could be seriously burned.

Steam from an overheated engine can cause serious burns which can occur just by opening the engine hood. Stay away from the engine if you see or hear steam coming from it.

Stop the vehicle in a safe location away from other traffic. Turn off the engine, get out of the vehicle and do not stand near the vehicle until the engine has cooled down.

! If the coolant temperature exceeds 248 °F(120 °C) do not continue driving. The engine will otherwise be damaged.

Display messages	Possible causes/consequences and ▶ Solutions
	The engine fan is defective. ▶ At coolant temperatures under 248 °F (120 °C), drive to the next qualified specialist workshop. ▶ Avoid subjecting the engine to heavy loads, e.g. driving in mountainous terrain, and stop-and-go traffic.
	The battery is not being charged. Possible causes are: • a defective alternator • a torn poly-V-belt • a malfunction in the electronics ▶ Pull over and stop the vehicle safely and switch off the engine, paying attention to road and traffic conditions. ▶ Open the hood. ▶ Check whether the poly-V-belt is torn. **If the poly-V-belt is torn:** ! Do not continue driving. The engine could otherwise overheat. ▶ Consult a qualified specialist workshop. **If the poly-V-belt is not damaged:** ▶ Visit a qualified specialist workshop.
	The battery voltage is too low. ▶ Switch off electrical consumers that are not required. ▶ Have the battery and alternator checked at a qualified specialist workshop.
	The battery has been charged or the vehicle has been jump-started. ▶ Have the battery and alternator checked at a qualified specialist workshop.
Check oil level at next gas station.	The engine oil level has dropped to a critical level. ▶ Check the oil level (▷ page 211). ▶ If necessary, add engine oil (▷ page 213). ▶ Have the engine checked for leaks if the engine oil needs to be refilled more often than usual.
	You have added too much engine oil. There is a risk of damaging the engine or catalytic converter. ▶ Siphon off excess engine oil until it is at the specified level. Observe the legal requirements.

Display messages	Possible causes/consequences and ▶ Solutions
	There is water in the engine oil. ▶ Have the engine oil examined at a qualified specialist workshop.
	The measuring system is malfunctioning. ▶ Visit a qualified specialist workshop.
Engine Oil Level Service Required	The engine oil level has dropped to a critical level. ▶ Check the oil level (▷ page 211). ▶ If necessary, add engine oil (▷ page 213). ▶ Have the engine checked for leaks if the engine oil needs to be refilled more often than usual.
	You have added too much engine oil. There is a risk of damaging the engine or catalytic converter. ▶ Siphon off excess engine oil until it is at the specified level. Observe the legal requirements.
	There is water in the engine oil. ▶ Have the engine oil checked.
At next gas station add 1.0 qt. engine oil. (USA only)At next gas station add 1.0 liter engine oil.(Canada only)	The engine oil level is too low. ▶ Check the oil level (▷ page 211). ▶ If necessary, add engine oil (▷ page 213). ▶ Have the engine checked for leaks if the engine oil needs to be refilled more often than usual.

Information on approved engine oils can be obtained from any qualified specialist workshop or on the Internet at http://bevo.mercedes-benz.com.

! The oil level is too low. Avoid long journeys with too little engine oil. There is a risk of engine damage.

The display messages and the corresponding symbol that indicate that the oil level is too low must not be ignored.

Display messages	Possible causes/consequences and ▶ Solutions
Engine Oil Level Stop, Turn Engine Off	The engine oil level is too low. There is a risk of engine damage. ▶ Pull over and stop the vehicle safely and switch off the engine, paying attention to road and traffic conditions. ▶ Switch off the engine. ▶ Add engine oil (▷ page 213) and check the oil level (▷ page 211).
Reserve Fuel	The fuel level has fallen below the reserve range. The fuel gauge's needle does not move any further down. The operation of the auxiliary heating can no longer be guaranteed. ▶ Refuel at the nearest gas station.
Gas cap is open.	The fuel system pressure is too low. The fuel filler cap is not closed correctly or the fuel system is leaking. ▶ Check that the fuel filler cap is correctly closed. ▶ **If the fuel filler cap is not correctly closed:** close the fuel filler cap. ▶ **If the fuel filler cap is closed:** visit a qualified specialist workshop.
Clean Fuel Filter	There is water in the fuel filter. The water must be drained off. ▶ Visit a qualified specialist workshop.

Driving systems

Display messages	Possible causes/consequences and ▶ Solutions
AAS Service Required	⚠ **Risk of accident** AAS is not available due to a malfunction. The vehicle may roll back on a gradient as soon as you remove your foot from the accelerator pedal. ▶ Drive on carefully. ▶ Visit a qualified specialist workshop immediately.
Cruise Cont. Inoperative	Cruise control is inoperative. ▶ Visit a qualified specialist workshop.

Tires

⚠ **WARNING**

Do not drive with a flat tire. A flat tire affects the ability to steer or brake the vehicle. You may lose control of the vehicle. Continued driving with a flat tire will cause excessive heat build-up and possibly a fire.

⚠ **WARNING**

Follow recommended tire inflation pressures.

Do not underinflate tires. Underinflated tires wear excessively and/or unevenly, adversely affect handling and fuel economy, and are more likely to fail from being overheated.

Do not overinflate tires. Overinflated tires can adversely affect handling and ride comfort, wear unevenly, increase stopping distance, and result in sudden deflation (blowout) because they are more likely to become punctured or damaged by road debris, potholes etc.

Display messages	Possible causes/consequences and ▶ Solutions
Tire pressure displayed only after driving for a few minutes	The tire pressure monitor is measuring the tire pressure. ▶ Drive on. The tire pressures appear in the multifunction display after you have been driving for a few minutes.
Tire Pres. Check Tires	⚠ **Risk of accident** The tire pressure monitor has detected a significant pressure loss. ▶ Stop the vehicle without making any sudden steering or braking maneuvers. Pay attention to the traffic conditions as you do so. ▶ Check the tires. ▶ Check the tire pressure and correct it if necessary (▷ page 242). ▶ Repair or change the faulty wheel as necessary (▷ page 226). ▶ Then restart the tire pressure monitor when the tire pressure is correct (▷ page 249).
Tire Pres. Monitor Inoperative	The tire pressure monitor is deactivated due to a malfunction. ▶ Visit a qualified specialist workshop.
Tire Pres. Monitor Inoperative No Wheel Sensors	The wheels mounted do not have a suitable tire pressure sensor. The tire pressure monitor is deactivated. ▶ Mount wheels with suitable tire pressure sensors. The tire pressure monitor is activated automatically after driving for a few minutes.

Display messages	Possible causes/consequences and ▶ Solutions
Caution Tire Defect	⚠ **Risk of accident** The tire pressure in one or more tires has dropped suddenly. The wheel position is shown in the multifunction display. ▶ Stop the vehicle without making any sudden steering or braking maneuvers. Pay attention to the traffic conditions as you do so. ▶ If necessary, change a wheel (▷ page 226).
Correct The Tire Pres.	The tire pressure is too low in at least one of the tires, or the tire pressure difference between the wheels is too great. ▶ Check the tire pressures at the next opportunity. If necessary, correct the tire pressure (▷ page 245). ▶ Restart the tire pressure monitor (▷ page 251).
Wheel Sensor Missing	There is no signal from the tire pressure sensor of one or several wheels. The pressure of the affected tire is not displayed in the multifunction display. ▶ Have the faulty tire pressure sensor replaced at a qualified specialist workshop.
Tire Pres. Monitor Currently Unavailable	Due to a source of radio interference, no signals can be received from the wheel sensors. The tire pressure monitor is temporarily malfunctioning. ▶ Drive on. The tire pressure monitor restarts automatically as soon as the problem has been solved.
 Correct The Tire Pres.	The tire pressure is too low in at least one of the tires, or the tire pressure difference between the wheels is too great. ▶ Check the tire pressures at the next opportunity. If necessary, correct the tire pressure (▷ page 248).

Display messages	Possible causes/consequences and ▶ Solutions
Tire Pres. Caution Tire Defect	⚠ **Risk of accident** The tire pressure in one or more tires has dropped suddenly. ▶ Stop the vehicle without making any sudden steering or braking maneuvers. Pay attention to the traffic conditions as you do so. ▶ If necessary, change a wheel (▷ page 226).
Tire Pres. Check Tires	⚠ **Risk of accident** The tire pressure in one or more tires has dropped significantly. ▶ Stop the vehicle without making any sudden steering or braking maneuvers. Pay attention to the traffic conditions as you do so. ▶ If necessary, change a wheel (▷ page 226). ▶ Check the tire pressure. If necessary, correct the tire pressure (▷ page 248).

Vehicle

Display messages	Possible causes/consequences and ▶ Solutions
	The rear door is open. ▶ Close the rear door.
	⚠ **Risk of accident** Vehicles with anti-theft alarm system: The hood is open. A warning tone also sounds. ▶ Pull over and stop the vehicle safely as soon as possible, paying attention to road and traffic conditions. ▶ Apply the parking brake. ▶ Close the hood.
	At least one door is open. ▶ Close all the doors.
Bluetooth Ready	The Bluetooth® connection between your mobile phone and COMAND is not activated. ▶ If desired, activate the Bluetooth® connection between your mobile phone and COMAND (see the separate Operator's Manual).
Top Up Washer Fluid	The washer fluid level in the washer fluid reservoir has dropped below the minimum. ▶ Add washer fluid (▷ page 214).

Display messages	Possible causes/consequences and ▶ Solutions
LOW HIGH TC Shift Procedure Canceled	The gear change process was not carried out. ▶ Repeat the gearshift process.
LOW HIGH TC Shift Conditions Not Fulfilled	One or more conditions to shift the transfer case have not been fulfilled. ▶ Repeat the gearshift process.
LOW HIGH TC In Neutral	The transfer case is in the neutral position. ▶ Shifting the transfer case into **HIGH** or **LOW**.
LOW HIGH Transfer Case Service Required	There is a malfunction in the transfer case. ▶ Do not shift the transfer case. ▶ Have the vehicle checked as soon as possible at a qualified specialist workshop.

⚠ **WARNING**

If the transfer case is in **Neutral**, the park position **P** of the automatic transmission will not hold the vehicle. The parking brake must be engaged to hold the vehicle in place.

Warning and indicator lamps in the instrument cluster

Seat belts

Problem	Possible causes/consequences and ▶ Solutions
After starting the engine, the red seat belt warning lamp lights up for six seconds.	The seat belt warning lamp reminds the driver and front passenger to fasten their seat belts. ▶ Fasten your seat belt (▷ page 41).
After starting the engine, the red seat belt warning lamp lights up. In addition, a warning tone sounds for up to six seconds.	⚠ **Risk of injury** The driver's seat belt is not fastened. ▶ Fasten your seat belt (▷ page 41). The warning tone ceases.

Problem	Possible causes/consequences and ▶ Solutions
The red seat belt warning lamp lights up after the engine starts, as soon as the driver's or the front-passenger door is closed.	⚠ **Risk of injury** The driver or front passenger has not fastened their seat belt. ▶ Fasten your seat belt (▷ page 41). The warning lamp goes out.
	⚠ **Risk of injury** There are objects on the front-passenger seat. ▶ Remove the objects from the front-passenger seat and stow them in a secure place. The warning lamp goes out.
The red seat belt warning lamp flashes and an intermittent audible warning sounds.	⚠ **Risk of injury** The driver or front passenger has not fastened their seat belt. In addition, you are driving faster than 15 mph (25 km/h) or you have briefly driven faster than 15 mph (25 km/h). ▶ Fasten your seat belt (▷ page 41). The warning lamp goes out and the intermittent audible warning ceases.
	⚠ **Risk of injury** There are objects on the front-passenger seat. In addition, you are driving faster than 15 mph (25 km/h) or you have briefly driven faster than 15 mph (25 km/h). ▶ Remove the objects from the front-passenger seat and stow them in a secure place. The warning lamp goes out and the intermittent audible warning ceases.

Safety systems	
Problem	**Possible causes/consequences and ▶ Solutions**
BRAKE (USA only) (!) (Canada only) The red brake system warning lamp comes on while the vehicle is moving. A warning tone also sounds.	You are driving with the parking brake applied. ▶ Release the parking brake. The warning lamp goes out and the warning tone ceases.
BRAKE (USA only) (!) (Canada only) The red brake system warning lamp comes on while the engine is running.	⚠ **Risk of accident** There is not enough brake fluid in the brake fluid reservoir. ▶ Pull over and stop the vehicle safely as soon as possible, paying attention to road and traffic conditions. Do not continue driving under any circumstances. ▶ Engage the parking brake. ▶ Consult a qualified specialist workshop immediately. ▶ Observe the additional display messages in the multifunction display. Do not add brake fluid. This will not rectify the malfunction.

⚠ **WARNING**

Driving with the brake warning lamp illuminated can result in an accident. Have your brake system checked immediately if the brake warning lamp stays on. Do not add brake fluid before checking the brake system.

Overfilling the brake fluid reservoir can result in spilling brake fluid on hot engine parts and the brake fluid catching fire. You can be seriously burned.

Problem	Possible causes/consequences and ▶ Solutions
The yellow ABS warning lamp is lit while the engine is running.	⚠ **Risk of accident** ABS (Anti-lock Brake System) is deactivated due to a malfunction. Therefore, BAS (Brake Assist), ESP® (Electronic Stability Program), EBD (electronic brake force distribution) and 4ETS are also deactivated. The brake system continues to function normally, but without the functions listed above. The wheels could therefore lock if you brake hard, for example. ▶ Observe the additional display messages in the multifunction display. ▶ Drive on carefully. ▶ Visit a qualified specialist workshop. If the ABS control unit is defective, other systems, such as the navigation system or the automatic transmission, may also be unavailable.
The yellow ABS warning lamp is lit while the engine is running.	⚠ **Risk of accident** The on-board voltage is too low. ABS has been deactivated due to undervoltage. ESP®, BAS, EBD and 4ETS are therefore also deactivated, for example. The brake system continues to function normally, but without the functions listed above. The wheels could therefore lock if you brake hard, for example. ▶ Observe the additional display messages in the multifunction display. ▶ Drive on carefully. ▶ Switch off consumers that are not required, e.g. the rear window defroster or interior lighting. ABS will be available again as soon as the vehicle's on-board electrical system voltage increases. If the warning lamp is still on: ▶ Have the battery and alternator checked at a qualified specialist workshop.
The yellow ABS warning lamp is lit while the engine is running.	You have engaged the differential locks. ABS, BAS, EBD, ESP® and 4ETS are deactivated. ▶ Disengage the differential locks. Subsequently, ABS, BAS, EBD, ESP® and 4ETS are reactivated.

Problem	Possible causes/consequences and ▶ Solutions
BRAKE (USA only) (Canada only) The red brake system warning lamp and the yellow ABS warning lamp are on while driving. In addition, a warning tone sounds for about five seconds.	⚠ **Risk of accident** EBD is faulty. The brake system continues to function normally, but without the functions listed above. The wheels could therefore lock if you brake hard, for example. ▶ Drive on carefully. ▶ Visit a qualified specialist workshop.
The yellow ESP® warning lamp flashes while the vehicle is in motion.	⚠ **Risk of accident** ESP® or traction control is intervening because there is a risk of skidding or because at least one wheel has started to spin. ▶ When pulling away, only depress the accelerator pedal as far as necessary. ▶ Ease off the accelerator pedal after pulling away. ▶ Adapt your driving style to suit the road and weather conditions. ▶ Do not deactivate ESP®. For exceptions: (▷ page 55).
OFF The yellow ESP® OFF warning lamp is lit while the engine is running.	⚠ **Risk of accident** ESP® is deactivated. ESP® will not stabilize the vehicle if it starts to skid or if a wheel starts to spin. ▶ Reactivate ESP®. For exceptions: (▷ page 55). ▶ Adapt your driving style to suit the road and weather conditions. If ESP® cannot be activated: ▶ Have ESP® checked at a qualified specialist workshop.

Problem	Possible causes/consequences and ▶ Solutions
ESP OFF The yellow ESP® OFF warning lamp is lit while the engine is running.	You have engaged the differential locks. ABS, ESP®, 4ETS and BAS have been deactivated. ▶ Disengage the differential locks. ESP®, 4ETS and BAS are subsequently reactivated. ▶ Observe the additional display messages in the multifunction display.
SRS The red SRS warning lamp is lit while the engine is running.	⚠ **Risk of injury** The restraint systems are malfunctioning. The air bags or ETDs may either be triggered unintentionally or, in the event of an accident, not be triggered at all. ▶ Drive on carefully. ▶ Visit a qualified specialist workshop immediately.

⚠ **WARNING**

In the event a malfunction of the SRS is indicated as outlined above, the SRS may not be operational.

For your safety, we strongly recommend that you contact an authorized Mercedes-Benz Center immediately to have the system checked. Otherwise the SRS may not be activated when needed in an accident, which could result in serious or fatal injury, or it might deploy unexpectedly and unnecessarily which could also result in injury.

Engine	
Problem	**Possible causes/consequences and ▶ Solutions**
CHECK ENGINE (USA only) (Canada only) The yellow Check Engine warning lamp lights up while the engine is running.	There may be a malfunction, for example: • in the engine management • in the fuel injection system • in the exhaust system • in the ignition system • in the fuel system The emission limit values may be exceeded and the engine may be running in emergency mode. ▶ Have the vehicle checked as soon as possible at a qualified specialist workshop. ℹ In some states/provinces, you are required by law to immediately visit a qualified specialist workshop if the yellow Check Engine warning lamp lights up. If in doubt, check whether such legal regulations apply in the state/province in which you are currently driving.
CHECK ENGINE (USA only) (Canada only) The yellow Check Engine warning lamp lights up while the engine is running.	The fuel system pressure is too low. The fuel filler cap is not closed correctly or the fuel system is leaking. ▶ Check that the fuel filler cap is correctly closed. ▶ **If the fuel filler cap is not correctly closed:** close the fuel filler cap. ▶ **If the fuel filler cap is closed:** visit a qualified specialist workshop.
▲ The yellow reserve fuel warning lamp lights up while the engine is running.	The fuel filler cap is not correctly closed. ▶ Check that the fuel filler cap is correctly closed. ▶ **If the fuel filler cap is not correctly closed:** close the fuel filler cap. ▶ **If the fuel filler cap is closed:** visit a qualified specialist workshop.
▲ The yellow reserve fuel warning lamp lights up while the engine is running.	The fuel level has dropped into the reserve range. ▶ Refuel at the nearest gas station.

Tires	
Problem	**Possible causes/consequences and ▶ Solutions**
(!) USA only: The yellow tire pressure monitor warning lamp (pressure loss/ malfunction) is lit. Canada only: The yellow tire pressure monitor warning lamp (pressure loss) is lit.	⚠ **Risk of accident** The tire pressure monitor has detected a loss of pressure in at least one of the tires. ▶ Stop the vehicle without making any sudden steering or braking maneuvers. Pay attention to the traffic conditions as you do so. ▶ Observe the additional display messages in the multifunction display. ▶ Check the tire pressure. If necessary, correct the tire pressure (▷ page 249). ▶ If necessary, change a wheel (▷ page 265).
(!) USA only: The yellow tire pressure monitor warning lamp (pressure loss/ malfunction) flashes for 60 seconds and then remains lit.	The tire pressure monitor is defective. ▶ Observe the additional display messages in the multifunction display. ▶ Visit a qualified specialist workshop.

⚠ **WARNING**

Each tire, including the spare (if provided), should be checked at least every two weeks when cold and inflated to the pressure recommended by the vehicle manufacturer on the Tire and Loading Information placard on the driver's door B-pillar or, if available, the tire pressure label on the inside of the fuel filler flap. If your vehicle has tires of a different size than the size indicated on the Tire and Loading Information placard or the tire pressure label, you should determine the proper tire pressure for those tires.

As an added safety feature, your vehicle has been equipped with a tire pressure monitoring system (TPMS) that illuminates a low tire pressure telltale when one or more of your tires are significantly underinflated. Accordingly, when the low tire pressure telltale illuminates, you should stop and check your tires as soon as possible, and inflate them to the proper pressure. Driving on a significantly underinflated tire causes the tire to overheat and can lead to tire failure.

Underinflation also reduces fuel efficiency and tire tread life, and may affect the vehicle's handling and stopping ability. Please note that the TPMS is not a substitute for proper tire maintenance, and it is the driver's responsibility to maintain correct tire pressure, even if underinflation has not reached the level to trigger illumination of the TPMS low tire pressure telltale.

USA only:

Your vehicle has also been equipped with a TPMS malfunction indicator to indicate when the system is not operating properly. The TPMS malfunction indicator is combined with the low tire pressure telltale. When the system detects a malfunction, the telltale will flash for approximately 1 minute and then remain continuously illuminated. This sequence will be repeated every time

▷▷

the vehicle is started as long as the malfunction exists. When the malfunction indicator is illuminated, the system may not be able to detect or signal low tire pressure as intended.

TPMS malfunctions may occur for a variety of reasons, including the installation of incompatible replacement or alternate tires or wheels on the vehicle that prevent the TPMS from functioning properly. Always check the TPMS malfunction telltale after replacing one or more tires or wheels on your vehicle to ensure that the replacement or alternate tires and wheels allow the TPMS to continue to function properly.

Useful information 188
Loading guidelines 188
Stowage areas 189
Features 193

Useful information

ℹ This Operator's Manual describes all models and all standard and optional equipment of your vehicle available at the time of publication of the Operator's Manual. Country-specific differences are possible. Please note that your vehicle may not be equipped with all features described. This also applies to safety-related systems and functions.

ℹ Please read the information on qualified specialist workshops (▷ page 20).

Loading guidelines

⚠ **WARNING**

Always fasten items being carried as securely as possible using cargo tie-down rings and fastening materials appropriate for the weight and size of the load.

In an accident, during hard braking or sudden maneuvers, loose items will be thrown around inside the vehicle. This can cause injury to vehicle occupants unless the items are securely fastened in the vehicle.

To help avoid personal injury during a collision or sudden maneuver, exercise care when transporting cargo. Do not pile luggage or cargo higher than the seat backrests.

Never drive a vehicle with the tailgate open. Deadly carbon monoxide (CO) gases may enter vehicle interior resulting in unconsciousness and death.

The handling characteristics of a laden vehicle are dependent on the distribution of the load within the vehicle. You should therefore load your vehicle as shown in the illustrations.

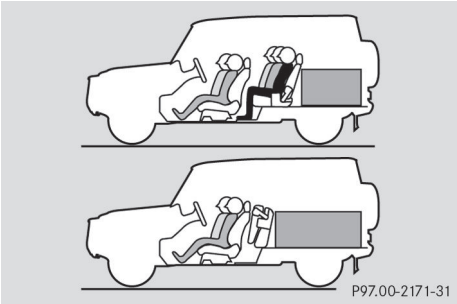

The gross vehicle weight (GVW) is the vehicle weight including fuel, vehicle tool kit, spare wheel, installed accessories, vehicle occupants and luggage/cargo.

The gross load limit and the gross vehicle weight rating (GVWR) for your vehicle must never be exceeded. The gross load limit and the GVWR are specified on the vehicle identification plate on the B-pillar of the driver's door (▷ page 271).

The load must also be distributed so that the weight on each axle never exceeds the gross axle weight rating (GAWR) for the front and rear axles. The specifications for GVWR and GAWR are on the vehicle identification plate on the B-pillar of the driver's door (▷ page 271).

Further information can be found in the "Loading the vehicle" section (▷ page 252).

Observe the following notes when transporting a load:

- position heavy loads as far forwards as possible and as low down in the cargo compartment as possible.

ℹ Transport loads when possible in the cargo compartment. You should only use the cargo compartment enlargement if the load does not fit in the cargo compartment.

- always place the load against the front or rear seat backrests.

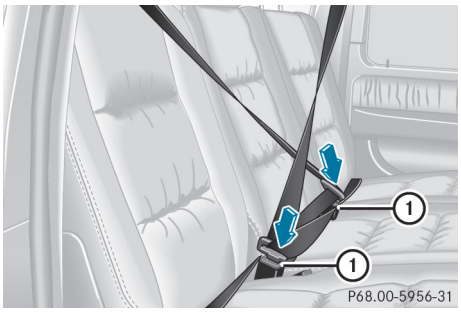

- if the rear bench seat is not occupied, insert the belt tongue on the outer seat belts into the buckle of opposite seat belt ①.
- secure the load with sufficiently strong and wear-resistant tie down. pad sharp edges for protection.

Stowage areas

Stowage compartments

Important safety notes

⚠ **WARNING**

To help avoid personal injury during a collision or sudden maneuver, exercise care when storing objects in the vehicle. Put luggage or cargo in the cargo compartment if possible. Do not pile luggage or cargo higher than the seat backrests.

Keep compartment lids closed. This will help to prevent stored objects from being thrown about and injuring vehicle occupants during

- braking
- vehicle maneuvers
- an accident

Stowage compartments in the front

Glove box

ℹ Depending on the vehicle's equipment, you will find an AUX-IN jack or a Media Interface installed in the glove box. A Media Interface is a universal interface for portable audio equipment, e.g. for an iPod® or USB device (see the separate Audio or COMAND operating instructions).

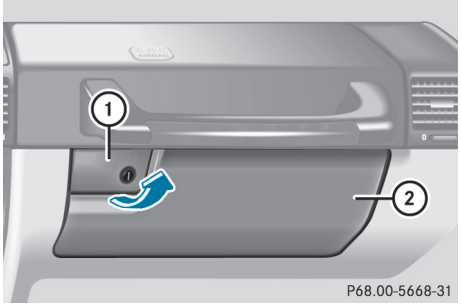

▶ **To open:** pull handle ① and open glove box flap ②.

▶ **To close:** fold glove box flap ② upwards until it engages.

The glove box can only be locked and unlocked using the mechanical key.

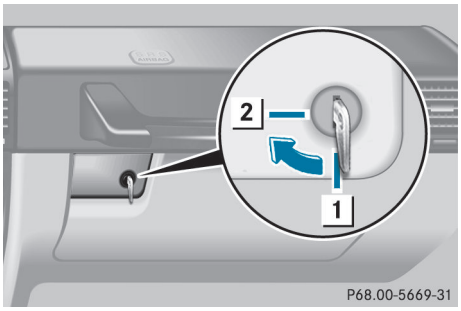

[1] Glove box unlocked

[2] Glove box locked

▶ **To lock:** insert the mechanical key (▷ page 61) into the lock and turn it 90° clockwise to position [2].

▶ **To unlock:** insert the mechanical key (▷ page 61) into the lock and turn it 90° counter-clockwise to position [1].

Stowage compartment/telephone compartment under the armrest/in the center console.

Under the armrest is a shallow stowage tray (telephone compartment), under which is a deeper stowage compartment.

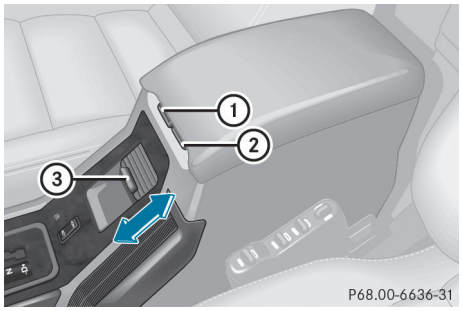

- **To open the stowage tray (telephone compartment):** press button ① and raise the armrest.
- **To open the stowage compartment:** press button ② and raise the armrest. The stowage tray is raised together with the armrest.
- **To open the stowage compartment in the center console:** slide cover ③ back using the handle.

ℹ The [ ](▷ page 200) Roadside Assistance call button and [ ](▷ page 201) MB Info call button are located in the stowage compartment under the armrest.

Stowage compartments in the rear

Stowage pockets

⚠ **WARNING**

Storage bags are intended for storing light-weight items only.

Heavy objects, objects with sharp edges or fragile objects may not be transported in the storage bag. In an accident, during hard braking, or sudden maneuvers, they could be thrown around inside the vehicle and cause injury to vehicle occupants.

Storage bags cannot protect transported goods in the event of an accident.

The stowage pockets are located on the rear side of the front seats.

Parcel nets

⚠ **WARNING**

Parcel nets are intended for storing light-weight items only, such as road maps, mail, etc.

Heavy objects, objects with sharp edges, or fragile objects may not be transported in the parcel nets. In an accident, during hard braking, or sudden maneuvers, they could be thrown around inside the vehicle and cause injury to vehicle occupants.

Parcel nets cannot protect transported goods in the event of an accident.

The parcel nets are located in the front-passenger footwell.

Cargo compartment enlargement

Important safety notes

⚠ **WARNING**

Always lock the seat backrest in its upright position when the rear seat bench is occupied, or the extended cargo volume is not in use.

Check for secure locking by pushing and pulling on the seat backrest.

In an accident, during hard braking or sudden maneuvers, loose items will be thrown around inside the vehicle. This can cause injury to vehicle occupants unless the items are securely fastened in the vehicle.

To help avoid personal injury during a collision or sudden maneuver, exercise care when transporting cargo.

⚠ **WARNING**

Failure to assure that the seat bench and seat backrests are locked into place could result in an increased chance of injury in an accident.

Never place hands under seat or near any moving parts while a seat is being adjusted.

For safety reasons, the rear seat bench must only be adjusted when the vehicle is stationary.

Never drive a vehicle with the tailgate open. Deadly carbon monoxide (CO) gases may enter vehicle interior resulting in unconsciousness and death.

! Ensure that you remove all containers from the cup holder in the rear before folding the seat backrest and the seat cushion of the rear bench seat forwards.

The left-hand and right-hand rear seats can be folded down to increase the cargo compartment capacity. The following changes are possible:

- fold the seat backrests forward
- fold the rear bench seat back fully.

Folding the seat backrest forward

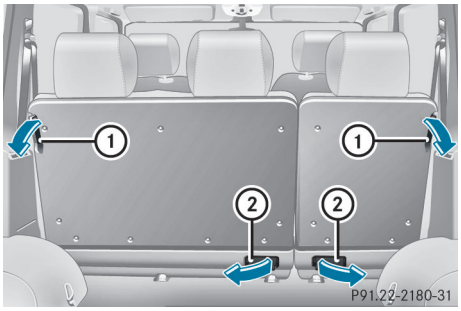

① Seat backrest release lever

② Rear bench seat release lever

ℹ Open the rear doors. This allows you better access to release lever ①.

▶ Remove the center head restraint (▷ page 78).

▶ Pull release lever ①.
The corresponding seat backrest is released.

▶ Fold the seat backrest forward until it engages.

Folding the seat backrest back

▶ Pull release lever ① and fold the seat backrest backwards.

! Make sure that the seat belt does not become trapped when folding the rear seat backrest back. Otherwise, it could be damaged.

▶ Fold the seat backrest back until it engages audibly in the seat catch.

▶ Install the head restraints (▷ page 78).

Folding the rear bench seat forward

▶ Fold the backrest forwards (▷ page 191).

▶ Pull release lever ②.
The corresponding rear bench seat is released.

▶ Fold the rear bench seat forward until it engages.

Folding the rear bench seat into an upright position

▶ Fold back the rear bench seat backrest until it engages audibly in the seat catch.

▶ Fold the backrest backwards (▷ page 191).

▶ Install the head restraints (▷ page 78).

⚠ **WARNING**

Make sure that the rear bench seat and front seat backrest are correctly engaged in position.

If the seat backrests or rear bench seat are not fully engaged and the following occurs:

- sharp braking
- a sudden change of direction
- an accident

the seat backrests or rear bench seat may fold forwards and instead of being restrained by the seats as intended you could be injured by them. Occupants could then also be injured in the event of an accident, e.g. by objects

being thrown forwards from the cargo compartment.

Securing cargo

Important safety notes

⚠ **WARNING**

Distribute the load on the cargo tie down rings evenly.

Otherwise, vehicle occupants could be injured by objects being thrown around if you:

- brake sharply
- change direction suddenly
- are involved in an accident

Please observe the loading guidelines.

Observe the following notes on securing loads:

- secure the load using the cargo tie down rings.
- do not use elastic straps or nets to secure a load, as these are only intended as an anti-slip protection for light loads.
- do not route tie downs across sharp edges or corners.
- pad sharp edges for protection.
- only use tie downs that have been checked in accordance with applicable standards, e.g. lashing nets or lashing straps.
- fill the spaces between the load and the cargo compartment walls and the wheel mountings in a form-locking way. Only use dimensionally stable transportation aids for this, such as chocks, wooden fixings or padding.

Cargo tie down rings in the cargo compartment

There are four cargo tie down rings in the cargo compartment mounted at the sides.

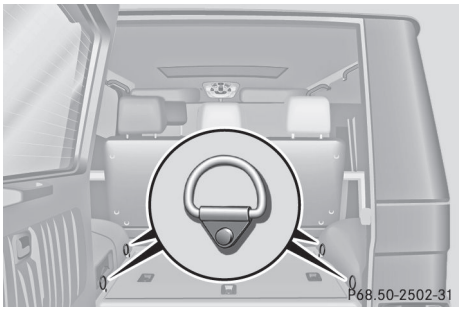

Cargo compartment cover

Important safety notes

! When loading the vehicle, make sure that you do not stack the load in the cargo compartment higher than the lower edge of the side windows. Do not place heavy objects on top of the cargo compartment cover.

The cargo compartment cover is located behind the rear bench seat backrest.

Opening and closing the cargo compartment cover

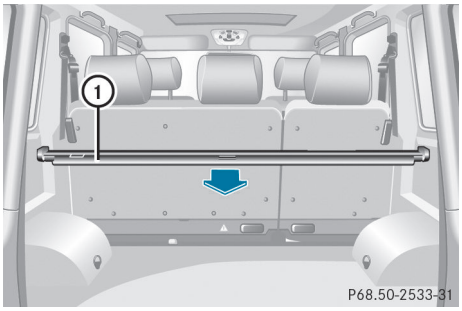

▶ **To open:** pull cargo compartment cover ① back and clip it into the retainers on the left and right of the rear door.

▶ **To close:** unclip cargo compartment cover ① and guide it forwards until it is completely rolled up.

Installing/removing the cargo compartment cover

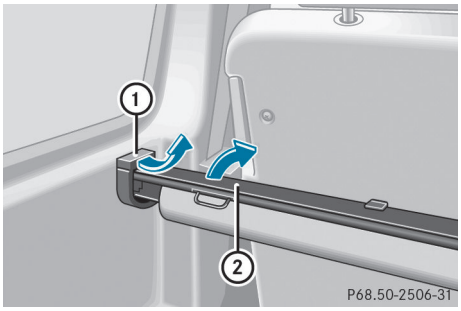

- **To remove:** make sure that cargo compartment cover ② is rolled up.
- Slide catches ① on the left-hand and right-hand sides of cargo compartment cover ② towards the center of the vehicle.
- Swing cargo compartment cover ② up and out.
- **To install:** slide catches ① towards the center of the vehicle.
- Insert cargo compartment cover ② into the recesses in the side trim.
- Press the right and left sides of cargo compartment cover ② downwards until cargo compartment cover ② engages.
- Slide catches ① in the direction of the side trim.

Roof carrier

The roof is not suited for transporting loads. Never use roof rails or other accessories mounted on the roof.

⚠ **WARNING**

Do not load items on the roof. It may cause instability during some maneuvers which could result in an accident.

Features

Cup holders

Important safety notes

⚠ **WARNING**

In order to help prevent spilling liquids on vehicle occupants and/or vehicle equipment, only use containers that fit into the cup holder. Use lids on open containers and do not fill containers to a height where the contents, especially hot liquids, could spill during braking, vehicle maneuvers, or in an accident. Liquids spilled on vehicle occupants may cause serious personal injury. Liquids spilled on vehicle equipment may cause damage not covered by the Mercedes-Benz Limited Warranty.

When not in use, keep the cup holder closed. An open cup holder may cause injury to you or others when contacted during braking, vehicle maneuvers, or in an accident.

Keep in mind that objects placed in the cup holder may come loose during braking, vehicle maneuvers, or in an accident and be thrown around in the vehicle interior. Objects thrown around in the vehicle interior may cause an accident and/or serious personal injury.

Cup holder on the center console

- Fold cup holder ① all the way up.

! Make sure that the cup holder on the center console is folded down before you move the front-passenger seat forwards.

Cup holder on the armrest

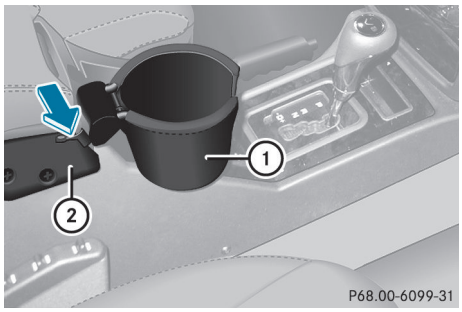

▶ Insert cup holder ① as shown with the arrow into the fixture of carrier bar ②.

If you do not require the cup holder, it can be stored in the glove box or in the stowage compartment in the center console, for example.

Cup holders in the rear compartment

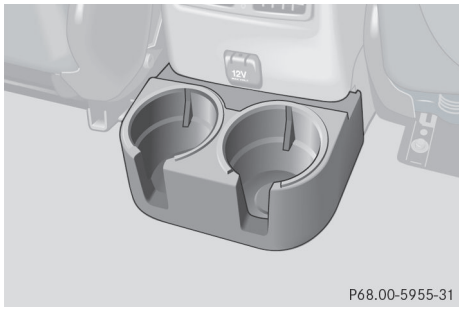

! Ensure that you remove all containers from the cup holder in the rear before folding the seat backrest and the seat cushion of the rear bench seat forwards.

Sun visors

Overview of sun visors

⚠ **WARNING**

Do not use the vanity mirror while driving. Keep the vanity mirrors in the sun visors closed while the vehicle is in motion. Reflected glare can endanger you and others.

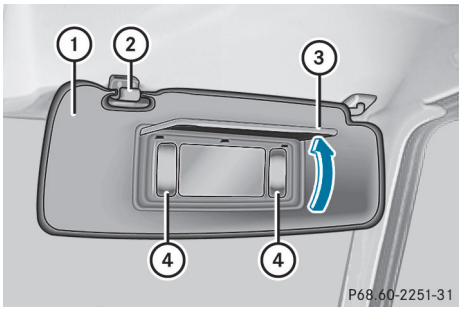

① Sun visor
② Bracket
③ Mirror cover
④ Mirror light

Glare from the side

▶ Fold down sun visor ①.
▶ Pull sun visor ① from bracket ②.
▶ Swing sun visor ① to the side.

Vanity mirror in the sun visor

Mirror lights ④ will only function if the sun visor is clipped into bracket ②.

▶ Fold down sun visor ①.
▶ Fold up mirror cover ③.
Mirror lights ④ are switched on automatically.

Ashtray

Ashtray in the cockpit

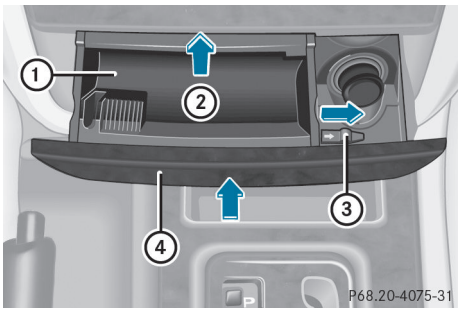

- **To open:** press cover ④ and then release it.
  Ashtray ① folds out.
- **To remove insert:** make sure that the vehicle is secured against rolling away by applying the parking brake.
- Move the selector lever to **N**.
- Move slide knob ③ to the right, so that insert ② is released.
- Pull insert ② upwards and remove it.
- **To re-install the insert:** press insert ② into the holder until it engages.
- **To close:** press cover ④ until it engages.

Ashtray in the rear compartment

An ashtray is located in each of the rear doors.

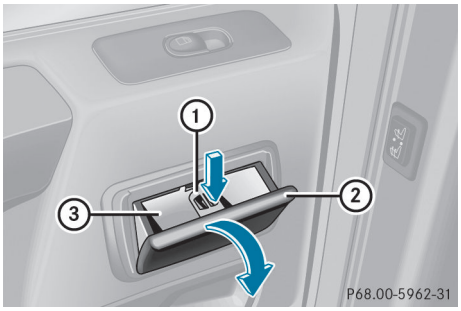

- **To open:** fold cover ② out in the direction of the arrow.
- **To remove the insert:** press retaining lug ① and pull insert ③ upwards and out.
- **To re-install the insert:** replace insert ③ from above.
- **To close:** close cover ② fully.

Cigarette lighter

⚠ **WARNING**

When leaving the vehicle, always remove the SmartKey from the ignition lock. Always take the SmartKey with you and lock the vehicle. Do not leave children unattended in the vehicle, even if they are secured in a child restraint system, or with access to an unlocked vehicle. A child's unsupervised access to a vehicle could result in an accident and/or serious personal injury. The children could:

- injure themselves on parts of the vehicle
- be seriously or fatally injured through excessive exposure to extreme heat or cold
- injure themselves or cause an accident with vehicle equipment that can be operated even if the SmartKey is removed from the ignition lock or removed from the vehicle, such as seat adjustment, steering wheel adjustment, or the memory function

If children open a door, they could injure other persons or get out of the vehicle and injure themselves or be injured by following traffic.

Do not expose the child restraint system to direct sunlight. The child restraint system's metal parts, for example, could become very hot, and the child could be burned on these parts.

⚠ **WARNING**

Never touch the heating element or sides of the lighter; they are extremely hot. Hold the knob only.

▷▷

Make sure any children traveling with you do not injure themselves or start a fire with the hot cigarette lighter.

! The 12 V socket in the cigarette lighter can be used for accessories (up to a maximum of 180 W), as long as they have the standard socket type for cigarette lighters. Note that the socket in the cigarette lighter can be damaged when connecting accessories, for example by frequent insertion and removal or by sockets that do not fit correctly. A damaged socket can cause the cigarette lighter to stop working.

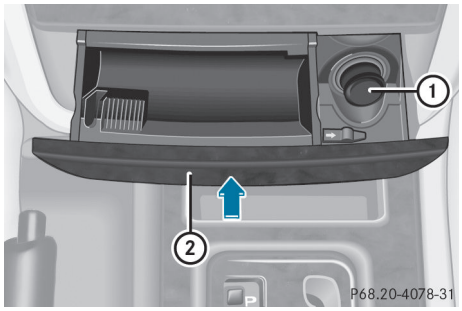

▶ Press cover ② and then release it.
The ashtray and cigarette lighter ① fold out.

▶ Press in cigarette lighter ①.
Cigarette lighter ① will pop out automatically when the heating element is red-hot.

12 V sockets

Points to observe before use

! If you are simultaneously using all three sockets in the vehicle, make sure that you do not exceed the maximum current draw of 45 A. Otherwise, you will overload the fuses.

The sockets can be used for accessories with a maximum power consumption of 180 W (15 A), e.g. lamps or chargers for mobile phones.

If you use the sockets for long periods when the engine is switched off, the battery may discharge.

▶ Turn the SmartKey to position **2** in the ignition lock.

Socket in the front-passenger footwell

▶ Lift up the cover of the socket.

The cigarette lighter socket can be also used (▷ page 195). This is the case even if the SmartKey has been removed from the ignition lock.

Socket in the rear compartment

The socket is located on the center console in the rear compartment.

▶ Lift up the cover of the socket.

Socket in the cargo compartment

The socket is located in the cargo compartment on the left-hand side, when viewed in the direction of travel, next to the rear door.

▶ Lift up the cover of the socket.

115 V socket

⚠ **WARNING**

The 115V AC socket operates at high voltage. Use the 115V AC socket in the vehicle with the same caution and prudence that you exercise when using power outlets at home. Keep any fluids away from the 115V AC socket. Do not clean the socket with fluids or tapered objects. Keep the 115V AC socket cover in the closed position, when not in use. Otherwise, you could suffer an electric shock and be seriously or even fatally injured.

⚠ **WARNING**

Any device that you connect must have a suitable plug and meet U.S. standards. Never pull at a cable to disconnect a plug from a 115 V AC power socket. Never use a damaged connection cable. The 115 V AC power socket must never be connected to another 115 V AC power source. Do not use a converter with an earthed plug for the 115 V AC power socket. This could cause serious injury to you and/or other people.

⚠ **WARNING**

If the 115V AC socket is damaged or torn out of the trim, do not use or touch the 115V AC socket. Using a 115V AC socket that is damaged or torn out of the trim could cause serious personal injury to you and/or others.

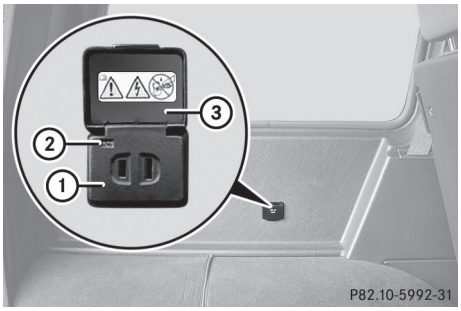

115 V power socket ① provides an alternating voltage of 115 V, so that small electronic devices can be connected. These devices, such as game consoles, chargers and laptops, should not consume more than a maximum of 150 W altogether.

Requirements for operation of these devices:

- the 12 V sockets in the rear compartment and the cargo compartment are operational (▷ page 196).
- the plug of the electronic device is plugged into 115 V power socket ①.
- the on-board power supply is within a permissible voltage range.
- the electronic device's maximum power output does not exceed 150 W.

▶ Open flap ③.

▶ Switch the ignition on.

▶ Insert the plug of the electronic device into 115 V power socket ①.
Indicator lamp ② lights up.

If indicator lamp ② does not light up, please read the chapter on malfunctions.

▶ **To turn off:** disconnect the plug from 115 V power socket ①.
Ensure that you do not pull on the cord.

▶ Close flap ③.

Possible causes of malfunction:

- the on-board power supply is not within a permissible voltage range.
- the temperature of the DC/AC converter is temporarily too high.
- some small electronic devices have a constant nominal power of less than 150 W, but a very high switch-on current. It is possible that these devices will not function properly, as 115 V socket ① is not able to provide a high enough current.

If indicator lamp ② still does not light up, contact a qualified specialist workshop.

mbrace[12]

Important safety notes

! You must have a license agreement to activate the mbrace service. Ensure that your system is activated and ready for use, and press the [•—] MB Info call button to register. If one of these steps is not carried out, it may not be possible to activate the system.

If you have questions about the activation, contact one of the following telephone hotlines:

- **USA:** Response Center at 1-888-990-9007
- **Canada:** Customer Service at 1-888-923-8367

Shortly after successfully registering with the mbrace service, a user ID and password will be sent to you by mail. You can use this password to log in to the mbrace section under "Owners Online" at **http://www.mbusa.com**[13].

The mbrace system is available if:

- it has been activated and is operational. Activation requires an available mobile phone network, a valid SIM card and a subscription to a security service.
- the battery is sufficiently charged.
- the corresponding mobile phone network is available for transmitting data to the Customer Center.

ℹ Determining the location of the vehicle on a map is only possible if there is sufficient GPS reception and the vehicle position can be forwarded to the Customer Center.

The mbrace system

The mbrace system provides three different services:

- automatic and manual emergency call
- Roadside Assistance call
- MB Info call

To adjust the volume during an mbrace call, proceed as follows:

▶ Press the [+] or [−] button on the multifunction steering wheel.

or

▶ Use the COMAND volume controller.

You can find information and a description of all available features under "Owners Online" at **http://www.mbusa.com**[14].

System self-test

After you have switched on the ignition, the system carries out a self-diagnosis.

[12] The system is called TELE AID in Canada.
[13] USA only.
[14] USA only.

⚠ **WARNING**

A malfunction in the system has been detected if one of the following conditions occurs:

- the indicator lamp in the SOS button does not light up during the system self-diagnosis.
- the indicator lamp in the Roadside Assistance button does not light up during the system self-diagnosis.
- the indicator lamp in the information button does not light up during the system self-diagnosis.
- the indicator lamp in the SOS button, Roadside Assistance button or information button continues to be lit red after the system self-diagnosis.
- the `Tele Aid inoperative` or `Tele Aid not activated` message appears on the multifunction display after the system self-diagnosis.

If a malfunction is indicated as outlined above, the system may not operate as expected. In the event of an emergency, assistance must be summoned by other means.

Have the system checked at the nearest authorized Mercedes-Benz Center or contact the following service hotlines:

- **USA:** Response Center at 1-888-990-9007
- **Canada:** Customer Service at 1-888-923-8367

Emergency call

Important safety notes

! You must have a license agreement to activate the mbrace service. Ensure that your system is activated and ready for use, and press the MB Info call button to register. If one of these steps is not carried out, it may not be possible to activate the system.

If you have questions about the activation, contact one of the following telephone hotlines:

- **USA:** Response Center at 1-888-990-9007
- **Canada:** Customer Service at 1-888-923-8367

An emergency call is dialed automatically if an air bag or Emergency Tensioning Device is triggered.

ℹ An automatically dialed mbrace emergency call cannot be canceled.

An emergency call can also be initiated manually.

As soon as the emergency call has been initiated, the indicator lamp in the SOS button flashes. The `Connecting Call` message appears on the multifunction display.

COMAND is muted.

Once a connection has been established, the `Call Connected` message appears on the multifunction display.

All important information on the emergency is provided, for example:

- current location of the vehicle (as determined by the GPS system)
- vehicle model
- vehicle color
- vehicle identification number

A short time after the emergency call is initiated, a voice connection is automatically established between the Response Center and the vehicle occupants. If the vehicle occupants are able to respond, the Response Center will attempt to obtain more detailed information on the emergency.

ℹ If there is no response from the vehicle occupants, an ambulance is immediately sent to the vehicle.

⚠ **WARNING**

If the indicator lamp in the SOS button is flashing continuously and there was no voice connection to the Response Center

▷▷

established, then the mbrace system could not initiate an emergency call (e.g. the relevant cellular phone network is not available).

The message Call Failed appears in the multifunction display for approximately 10 seconds.

Should this occur, assistance must be summoned by other means.

Making an emergency call

- **To initiate an emergency call manually:** press cover ① briefly to open it.
- Press SOS button ② briefly.
  The indicator lamp in SOS button ② flashes until the emergency call is concluded.
- Wait for the voice connection with the Response Center.
- After the emergency call is ended, close cover ①.

⚠ **WARNING**

If you feel at any way in jeopardy when in the vehicle (e.g. smoke or fire in the vehicle, vehicle in a dangerous road location), please do not wait for voice contact after you have pressed the SOS button. Carefully leave the vehicle and move to a safe location. The Response Center will automatically contact local emergency officials with the vehicle's approximate location if they receive an automatic SOS signal and cannot make voice contact with the vehicle occupants.

Roadside Assistance button

- Open the stowage compartment under the armrest (▷ page 189).

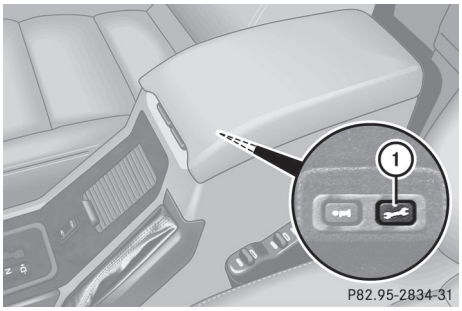

- Press and hold Roadside Assistance button ① for more than two seconds.
  A call to a Mercedes-Benz Roadside Assistance Representative is initiated. The indicator lamp in Roadside Assistance button ① flashes while the call is active.
  The Connecting call message appears on the multifunction display and the COMAND system is muted.

If a connection can be established, the Call Connected message appears on the multifunction display.

If a mobile phone network is available and there is sufficient GPS reception, the mbrace system transmits data to the Response Center, for example:

- current location of the vehicle
- vehicle identification number
- vehicle model
- vehicle color

ℹ The COMAND display shows that an mbrace call is active. You can switch to the navigation menu by pressing the NAVI button on COMAND during the call. Voice output is not available.

A voice connection is established between the Mercedes-Benz Roadside Assistance Representative and the vehicle occupants.

- Describe the type of assistance needed.

The Mercedes-Benz Roadside Assistance Representative either sends a qualified Mercedes-Benz technician or makes arrangements for your vehicle to be transported to the nearest authorized Mercedes-Benz Center. You may be charged for services such as repair work and/or towing. Further details are available in your mbrace manual.

ⓘ If the indicator lamp in Roadside Assistance button ① flashes continuously and no voice connection to the Response Center has been established, then the mbrace system has failed to initiate a Roadside Assistance call (e.g. the corresponding mobile phone network is not available). The `Call Failed` message appears on the multifunction display.

▶ **To end a call:** press the [☎] button on the multifunction steering wheel.

or

▶ Press the corresponding button for ending a phone call on COMAND.

ⓘ Sign and Drive services[15]: services such as jump-starting your vehicle, delivering a few gallons of fuel if you run out and mounting your spare if you have a flat tire are provided free-of-charge.

MB Info call button

▶ Open the stowage compartment under the armrest (▷ page 189).

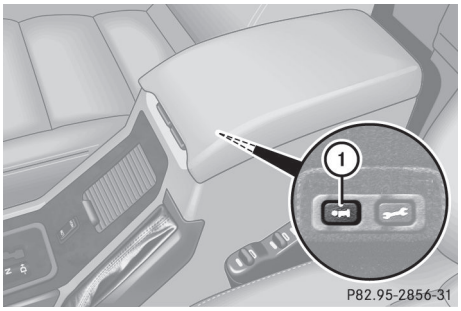

▶ Press and hold MB Info call button ① for more than two seconds.
A call to the Response Center is initiated. The indicator lamp in MB Info call button ① flashes while the connection is being established. The `Connecting call` message appears on the multifunction display and the COMAND system is muted.

If a connection can be established, the `Call Connected` message appears on the multifunction display.

If a mobile phone network is available and there is sufficient GPS reception, the mbrace system transmits data to the Response Center, for example:

- current location of the vehicle
- vehicle identification number
- vehicle model
- vehicle color

ⓘ The COMAND display shows that an mbrace call is active. You can switch to the navigation menu during the call by pressing the NAVI button on COMAND.

A voice connection between the Response Center and the vehicle occupants is established. You can obtain information on how to operate your vehicle's systems, on the location of the nearest authorized Mercedes-Benz Center, and on further products and services offered by Mercedes-Benz USA.

[15] USA only.

Further details on the mbrace system can be found at **http://www.mbusa.com**[16]. Log in under "Owners Online".

ⓘ If the indicator lamp in MB Info call button ① flashes continuously and no voice connection to the Response Center has been established, then the mbrace system has failed to initiate an MB Info call (e.g. because the corresponding mobile phone network is not available). The Call Failed message appears on the multifunction display.

▶ **To end a call:** press the button on the multifunction steering wheel.

or

▶ Press the corresponding button for ending a phone call on COMAND.

Call priority

When service calls are active, e.g. Roadside Assistance or MB Info calls, an emergency call can still be initiated. In this case, an emergency call has the highest priority and takes precedence over all other active calls.

The indicator lamp of the respective button flashes until the call is ended. An emergency call can only be terminated by the Response Center. All other calls can be ended by pressing the button on the multifunction steering wheel or the corresponding button for ending a telephone call on COMAND.

ⓘ When an mbrace call has been initiated, COMAND is muted. The mobile phone is no longer connected to COMAND. However, if you want to use your mobile phone, we recommend that you do this only when the vehicle is stationary and in a safe location.

Downloading destinations in COMAND

ⓘ Information on the components and operating principles of the COMAND system can be found in the separate COMAND operating instructions.

Destination Download gives you access to a database with over ten million points of interest (POIs) which can be downloaded onto the navigation system of your vehicle. If you know the destination, you can download the address or obtain the location of points of interest (POIs) or important destinations in the surrounding area.

You are prompted to confirm route guidance to the address entered.

▶ Select Yes using the ◀ or ▶ button on COMAND.

▶ Press OK on COMAND to confirm.

The system calculates the route and subsequently starts the route guidance with the address entered.

ⓘ If you select No, the address can be stored in the address book.

ⓘ The Destination Download function is available if the corresponding mobile phone network is available and data transfer is possible.

Search & Send

"Search & Send" is a destination entry service. You can find further information on "Search & Send" in the separate COMAND operating instructions.

Vehicle remote opening

If you have unintentionally locked your vehicle (e.g. the SmartKey is inside the vehicle) and a replacement key is not available:

▶ Contact the following service hotlines:

[16] USA only.

- **USA:** Response Center at 1-888-990-9007
- **Canada:** Customer Service at 1-888-923-8367

You will be asked for your password.

▶ Return to your vehicle at the time arranged with the Response Center.

▶ Press and hold the release button on the rear door handle for at least 20 seconds until the indicator lamp in the SOS button (▷ page 199) begins flashing.
The `Connecting Call` message appears on the multifunction display.

Alternatively, the vehicle can also be opened via the Internet in the "Owners Online" section using your ID number and password[17].

ℹ Vehicle remote unlocking is only possible if the corresponding mobile phone network is accessible.

The SOS button flashes and the `Connecting Call` message appears in the multifunction display to confirm that the command for vehicle remote unlocking has been received.

If you press the rear door's locking cylinder for more than 20 seconds before receiving authorization for remote unlocking, you must wait 15 minutes before you can press the rear door's locking cylinder again.

Service for recovering a stolen vehicle

If your vehicle has been stolen:

▶ Contact the police.
The police will issue an incident report. This report has a number.

▶ Forward this number to the Response Center together with your PIN.
The Response Center will then attempt to covertly contact the mbrace system. The Response Center contacts you and the local law enforcement authority if the vehicle is located. However, only the law enforcement is informed of the location of the vehicle.

ℹ If the anti-theft alarm system remains activated for longer than thirty seconds, mbrace is automatically connected to the Response Center.

Brush guard (USA only)

⚠ **WARNING**

The brush guard is designed solely to enhance the appearance of the vehicle and help protect grille and headlamps from minor mishaps, either on or off road.

Since the safety characteristics are limited in the event of an accident, brush guard are not intended to prevent injury or damage in the event of an accident. Also observe state and local regulations on installation and use.

Raise and lower the brush guard in an open space with plenty of room.

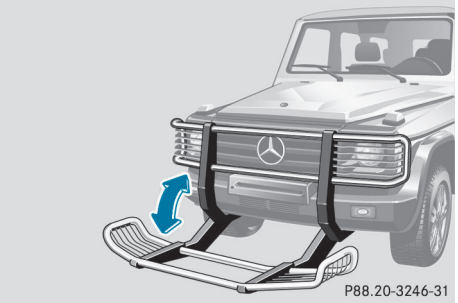

Example: G 55 AMG with brush guard

❗ Only drive when the brush guard is folded up and locked.

Only fold down the brush guard to replace a bulb, for example.

[17] USA only.

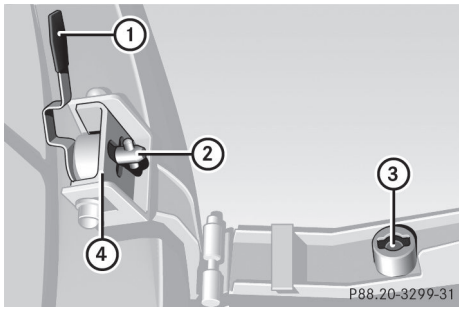

ℹ Keep hold of the brush guard when releasing it. It will otherwise immediately swing downward.

▶ **To swing down:** release both quick-release fasteners ② using wrench ①.

▶ Slowly guide the brush guard downward.

▶ **To swing up and secure:** swing the brush guard up to stop joint ④ and hold it in place.
The pins of quick-release fasteners ② must engage in the openings in lock ③.

▶ Lock quick-release fasteners ② on both sides using wrench ①.

! Make sure that the pins of the quick-release fasteners are securely engaged in the lock on both sides.

Garage door opener

Important safety notes

You can use the HomeLink® garage door opener integrated into the rear-view mirror to operate up to three different gate/garage door opener systems.

ℹ Certain garage door drives are incompatible with the integrated garage door opener. If you have difficulty programming the integrated garage door opener, contact an authorized Mercedes-Benz Center. You can also contact the following service hotlines:

- **USA:** Mercedes-Benz Customer Assistance Center at 1-800-FOR-MERCedes
- **Canada:** Customer Service at 1-800-387-0100

⚠ **WARNING**

Before programming the integrated remote control to a garage door opener or gate operator, make sure people and objects are out of the way of the device to prevent potential harm or damage. When programming a garage door opener, the door moves up or down. When programming a gate operator, the gate opens or closes.

Do not use the integrated remote control with any garage door opener that lacks safety stop and reverse features as required by U.S. federal safety standards (this includes any garage door opener model manufactured before April 1, 1982). A garage door that cannot detect an object - signaling the door to stop and reverse - does not meet current U.S. federal safety standards.

When programming a garage door opener, park vehicle outside the garage.

Do not run the engine while programming the integrated remote control. Inhalation of exhaust gas is hazardous to your health. All exhaust gas contains carbon monoxide (CO), and inhaling it can cause unconsciousness and possible death. All exhaust gas contains carbon monoxide (CO), and inhaling it can cause unconsciousness and possible death.

ℹ USA only:

This device complies with part 15 of the FCC Rules. Operation is subject to the following two conditions:

1. This device may not cause harmful interference, and

2. this device must accept any interference received, including interference that may cause undesired operation.

Any unauthorized modification to this device could void the user's authority to operate the equipment.

ℹ Canada only:

This device complies with RSS-210 of Industry Canada. Operation is subject to the following two conditions:

1. This device may not cause interference, and

2. this device must accept any interference received, including interference that may cause undesired operation of the device.

Any unauthorized modification to this device could void the user's authority to operate the equipment.

Programming the remote control

Programming

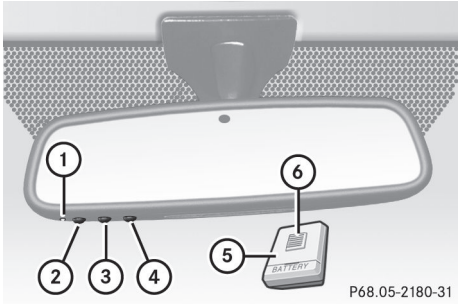

Remote control in the rear-view mirror

Garage door remote control ⑤ is not part of the garage door opener.

ℹ To achieve the best result, insert new batteries in garage door remote control ⑤ of your garage door drive before programming.

▶ Erase the memory of the integrated remote control (▷ page 207) before programming it for the first time.

▶ Turn the SmartKey to position **2** in the ignition lock.

▶ Press and hold one of transmitter buttons ② to ④ on the integrated remote control.
After a short time, indicator lamp ① will start flashing. It flashes about once per second.

ℹ Indicator lamp ① flashes immediately the first time that the transmitter button is programmed. If this transmitter button has already been programmed, indicator lamp ① will only start flashing at a rate of once a second after 20 seconds have elapsed.

▶ Keep the transmitter button depressed.

▶ Point garage door remote control ⑤ with transmitter button ⑥ toward the transmitter buttons on the rear-view mirror at a distance of 2 to 12 inches (5 to 30 cm).

ℹ The distance between garage door remote control ⑤ and the integrated garage door opener depends on the system of the garage door drive. You might require several attempts. You should test every position for at least 20 seconds before trying another position.

▶ Keep transmitter button ⑥ on garage door remote control ⑤ pressed until indicator lamp ① starts to flash rapidly.
The programming has been successful if indicator lamp ① flashes rapidly.

▶ Release transmitter buttons ②, ③ or ④ on the integrated remote control and transmitter button ⑥ on the garage door remote control.

If indicator lamp ① goes out after approximately 20 seconds and has not flashed rapidly:

▶ Release transmitter buttons ②, ③ or ④ on the integrated remote control and transmitter button ⑥ on the garage door remote control.

▶ Repeat the procedure for the other transmitter buttons. When doing so, vary the distance between the garage door's remote control and the transmitter buttons in the rear-view mirror.

ℹ If the garage door system works with a rolling code, you must synchronize the remote control integrated into the rear-view mirror with the garage door system receiver after programming.

You will find further information in the garage door opening system's operating instructions, e.g. the sections on "Synchronizing the transmitter" or "Registering a new transmitter". You can also call the hotline mentioned above.

Notes on programming the remote control

Canadian radio frequency laws require a "break" (or interruption) of the transmission signals a few seconds after broadcasting. Therefore, these signals may not last long enough for the integrated remote control to recognize the signal during programming. Comparable with Canadian law, some U.S. garage door openers also have a built-in "interruption".

If you live in Canada or have difficulties programming the garage door opener (regardless of where you live) when using the programming steps (see above), proceed as follows:

▶ Press transmitter button (②, ③ or ④) and hold it down during the following steps until the setup has been completed successfully.

▶ At the same time, press transmitter button ⑥ of the garage door remote control for two seconds, then release it for two seconds, then press it again for two seconds.

▶ Repeat this sequence on transmitter button ⑥ of the garage door remote control until the frequency signal has been saved.

▶ If the setup procedure is successful, indicator lamp ① flashes once slowly and goes out after a few seconds.

▶ Continue with the other programming steps (see above).

Problems when programming

If you have problems when programming the integrated remote control, please note the following:

- check the transmitter frequency of garage door remote control ⑤ (which can usually be found on the rear of the remote control).

  The integrated remote control is compatible with devices that operate at frequencies between 280 and 390 MHz.
- replace the batteries in garage door remote control ⑤. This increases the likelihood of garage door remote control ⑤ sending a strong and precise signal to the integrated remote control on the rear-view mirror.
- when programming, hold garage door remote control ⑤ at varying distances and angles from the transmitter button which you are programming. Try different angles at a distance between 2 and 12 inches (5 to 30 cm) or the same angle at varying distances.
- if there is another garage door remote control for the same device, perform the programming steps again using that garage door opener. Before performing these steps, make sure that there are new

batteries in the garage door remote control.

- align the antenna cable of the garage door opener unit. This can improve signal reception/transmission.

Opening/closing the garage door

Once programmed, the integrated remote control will assume the function of the garage door system's remote control. Please also read the operating instructions for the garage door system.

▶ Turn the SmartKey to position **2** in the ignition lock.

▶ Press transmitter button ②, ③ or ④ on the integrated remote control in the rear-view mirror that is programmed to operate the garage door.
Garage door system with fixed code: indicator lamp ① lights up continuously.

Garage door system with rolling code: indicator lamp ① flashes briefly and then lights up for approximately two seconds. This is repeated for up to 20 seconds.

ℹ The transmitter will transmit a signal for as long as the transmitter button is being pressed. The transmission will be halted after a maximum of 20 seconds and indicator lamp ① will flash. Press the transmitter button again, if necessary.

Clearing the remote control memory

▶ Turn the SmartKey to position **2** in the ignition lock.

▶ Press and hold transmitter buttons ② and ④ for approximately 20 seconds until indicator lamp ① flashes rapidly.
The memory is cleared.

ℹ You should clear the remote control memory before selling the vehicle.

Floormat on the driver's side

⚠ **WARNING**

Whenever you are using a floormat, make sure there is enough clearance and that the floormat is securely fastened.

The floormat should always be securely fastened using the fastening equipment.

Before driving off, check that the floormat is securely in place and adjust it if necessary. A loose floormat could slip and hinder proper functioning of the pedals.

Do not place several floormats on top of each other as this may impair pedal movement.

Useful information 210
Engine compartment 210
Maintenance 215
Care 216

Useful information

ℹ This Operator's Manual describes all models and all standard and optional equipment of your vehicle available at the time of publication of the Operator's Manual. Country-specific differences are possible. Please note that your vehicle may not be equipped with all features described. This also applies to safety-related systems and functions.

ℹ Please read the information on qualified specialist workshops (▷ page 20).

Engine compartment

Hood

Opening the hood

⚠ **WARNING**

Do not pull the release lever while the vehicle is in motion. Otherwise, the hood could be forced open by passing air flow.

This could cause the hood to come loose and injure you and/or others.

⚠ **WARNING**

Do not open the hood when the engine is overheated. You could be seriously injured. Observe the coolant temperature gauge to determine whether the engine may be overheated. If you see flames or smoke coming from the engine compartment, move away from the vehicle. Wait until the engine has cooled. If necessary, call the fire department.

⚠ **WARNING**

You could be injured when the hood is open – even when the engine is turned off.

Parts of the engine can become very hot. To prevent burns, let the engine cool completely before touching any components on the vehicle. Comply with all relevant safety precautions.

⚠ **WARNING**

To help prevent personal injury, stay clear of moving parts when the hood is open and the engine is running.

The radiator fan may continue to run for approximately 30 seconds or may even restart after the engine has been turned off. Stay clear of fan blades.

⚠ **WARNING**

The engine is equipped with a transistorized ignition system. Because of the high voltage, it is dangerous to touch any components (ignition coils, spark plug sockets, diagnostic socket) of the ignition system:

- with the engine running
- while starting the engine
- when the ignition is switched on and the engine is turned manually

▶ Make sure that the windshield wipers are switched off.

⚠ **WARNING**

The windshield wipers and wiper linkage could be set in motion.

When the hood is open, you or others could be injured by the wiper linkage.

Make sure that the windshield wipers are switched off and that the SmartKey has been pulled out of the ignition lock before opening the hood.

The release lever on the hood is in the footwell on the left-hand side of the vehicle when viewed in the direction of travel.

▶ Pull release lever ① on the hood.
The hood is released.

! Make sure that the windshield wipers are not folded away from the windshield. You could otherwise damage the windshield wipers or the hood.

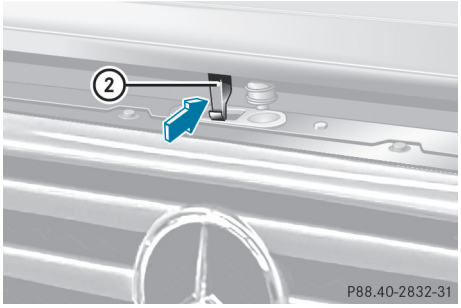

▶ Lift the hood slightly.
▶ Push hood catch handle ② in the direction of the arrow and lift the hood.

Closing the hood

⚠ **WARNING**

When closing the hood, use extreme caution not to catch hands or fingers. Be careful that you do not close the hood on anyone.

Make sure the hood is securely engaged before driving off. Do not continue driving if the hood can no longer engage after an accident, for example. The hood could otherwise come loose while the vehicle is in motion and injure you and/or others.

▶ Lower the hood and let it fall from a height of approximately 8 inches (20 cm).
▶ Check that the hood has engaged properly. If the hood can be raised slightly, it is not properly engaged. Open it again and close it with a little more force.

Engine oil

Notes on the oil level

Depending on the driving style, the vehicle consumes up to 0.9 US qts (0.8 l) of oil over a distance of 600 miles (1,000 km). The oil consumption may be higher than this when the vehicle is new or if you frequently drive at high engine speeds.

Checking the oil level using the oil dipstick

On the G 55 AMG, the oil level can be checked using the on-board computer.

When checking the oil level:

- park the vehicle on a level surface.
- the engine should be switched off for approximately five minutes if the engine is at normal operating temperature.
- the engine should be switched off for at least 30 minutes if the engine is not at operating temperature (i.e. if you only start the engine briefly).

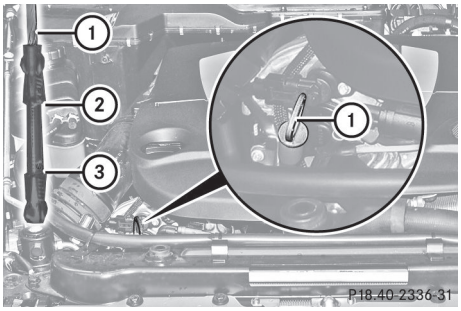

Oil dipstick (example: G 550)

▶ Pull oil dipstick ① out of the dipstick guide tube.

▶ Wipe off oil dipstick ①.

▶ Slowly slide oil dipstick ① into the guide tube to the stop, and take it out again. The oil level is correct if the level is between MIN mark ③ and MAX mark ②.

▶ Add oil if necessary.

Checking the oil level using the on-board computer

On the G 55 AMG, the oil level can be checked using the on-board computer.

When checking the oil level:

- park the vehicle on a level surface.
- the engine should be switched off for approximately five minutes if the engine is at normal operating temperature.

▶ Make sure that the SmartKey is in position **2** in the ignition lock.

▶ Press the [△] or [▽] button on the steering wheel to select the following message:

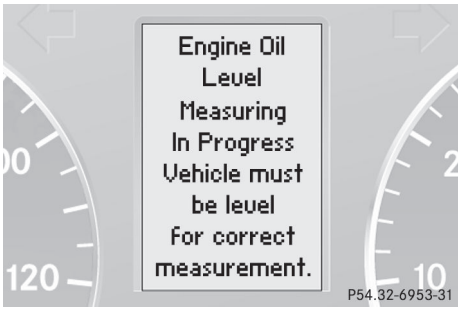

The measurement takes a few seconds. You will see one of the following messages in the multifunction display:

- Engine Oil Level OK
- Add 1.0 qt (Canada: 1.0 liter) to reach maximum oil level.
- Add 1.5 qts (Canada: 1.5 liters) to reach maximum oil level.
- Add 2.0 qts (Canada: 2.0 liters) to reach maximum oil level.

▶ Add oil if necessary.

If the engine is at normal operating temperature and the Engine Oil Reduce Oil Level message appears, the engine oil level is too high.

▶ Have excess oil siphoned off.

! Do not add too much oil. Adding too much oil can result in damage to the engine or the catalytic converter. Have excess oil siphoned off.

If the Switch ignition on to check engine oil level message appears:

▶ Turn the SmartKey to position **2** in the ignition lock.

If the Observe Waiting Time message appears:

▶ If the engine is at normal operating temperature: repeat the measurement after about five minutes.

If the engine is not at normal operating temperature (e.g. if the engine was only started briefly): repeat the measurement after about 30 minutes.

If the Engine Oil Level Not With Engine On message appears:

▶ Switch off the engine.

▶ If the engine is at normal operating temperature: wait about five minutes before carrying out the measurement.

If the engine is not at normal operating temperature, e.g. if the engine was only started briefly: wait about 30 minutes before carrying out the measurement.

ⓘ If you wish to cancel the measurement, press the [▽] or [△] button on the multifunction steering wheel.

Adding engine oil

Environmental note

When adding oil, take care not to spill any. If oil enters the soil or waterways, it is harmful to the environment.

! Use only engine oils and oil filters that have been approved for vehicles equipped with a service system. A list of the engine oils and oil filters tested and approved in accordance with the Mercedes-Benz Specifications for Service Products can be obtained from any authorized Mercedes-Benz Center.

Damage to the engine or exhaust system is caused by the following:

- using engine oils and oil filters which have not been specifically approved for the service system.
- replacing the engine oil or oil filter after the replacement interval required by the service system has elapsed
- using engine oil additives.

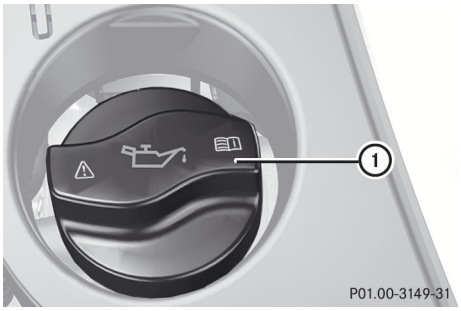

Example: engine oil cap

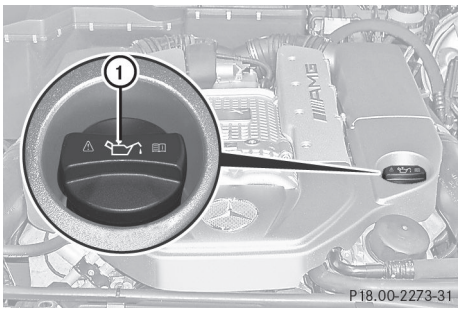

Engine oil cap (G 55 AMG)

▶ Turn cap ① counterclockwise and remove it.

▶ Add the amount of oil required.

Observe the specifications in the on-board computer when doing so or fill carefully to the maximum mark on the oil dipstick.

ⓘ The difference in quantity between the MIN mark and the MAX mark on the dipstick is approximately 2.1 US qts. (2 l).

! Do not add too much oil. If the oil level is above the "max" mark on the dipstick, too much oil has been added. This can lead to damage to the engine or the catalytic converter. Have excess oil siphoned off.

For further information on engine oil, see (▷ page 275).

▶ Replace cap ① on the filler neck and tighten clockwise.
Ensure that the cap locks into place securely.

Checking and adding other service products

Coolant level

Only check the coolant level when the vehicle is on a level surface and the engine has cooled down.

- Turn the SmartKey to position **2**(▷ page 115) in the ignition lock.
- Check the coolant temperature display in the instrument cluster.
  The coolant temperature must be below 158 °F (70 °C).

⚠ **WARNING**

In order to avoid any potentially serious burns:

- use extreme caution when opening the hood if there are any signs of steam or coolant leaking from the cooling system, or if the coolant temperature display indicates that the coolant is overheated.
- do not remove the pressure cap on the coolant reservoir if the coolant temperature is above 158 °F (70 °C). Allow the engine to cool down before removing the cap. The coolant reservoir contains hot fluid and is under pressure.
- using a rag, slowly turn the cap approximately $^{1}/_{2}$ turn to relieve excess pressure. If opened immediately, scalding hot fluid and steam will be blown out under pressure.
- do not spill antifreeze on hot engine parts. Antifreeze contains ethylene glycol which may burn if it comes into contact with hot engine parts.

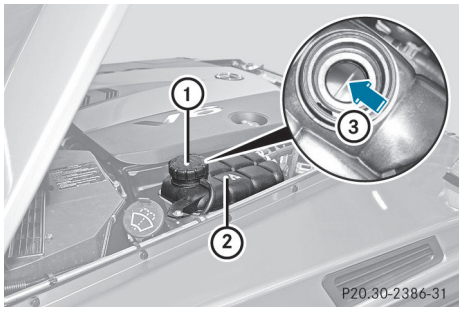

- Slowly turn cap ① half a turn counterclockwise and allow excess pressure to escape.
- Turn cap ① further counterclockwise and remove it.
  If the coolant is at the level of marker bar ③ in the filler neck when cold, there is enough coolant in coolant expansion tank ②.
  If the coolant is approximately 0.6 in (1.5 cm) above marker bar ③ in the filler neck when warm, there is enough coolant in coolant expansion tank ②.
- If necessary, add coolant that has been tested and approved by Mercedes-Benz.
- Replace cap ① and turn it clockwise as far as it will go.

For further information on coolant, see (▷ page 276).

Windshield washer system and headlamp cleaning system

The washer fluid reservoir is used for both the windshield washer system and the headlamp cleaning system.

⚠ **WARNING**

Washer solvent/antifreeze is highly flammable. Do not spill washer solvent/antifreeze on hot engine parts, because it may ignite and burn. You could be seriously burned.

! At temperatures below freezing: always fill the washer fluid reservoir with a mix of water and windshield washer concentrate (e.g. MB WinterFit). There is otherwise a risk of damaging the windshield washer system/headlamp cleaning system.

! Only use washer fluid concentrate which is suitable for plastic lenses. Unsuitable washer fluid concentrate could damage the plastic lenses of the headlamps.

! Do not add distilled or de-ionized water to the washer fluid container. Otherwise, the level sensor may be damaged.

ⓘ Add windshield washer concentrate, e.g. MB SummerFit, to the washer fluid all year round.

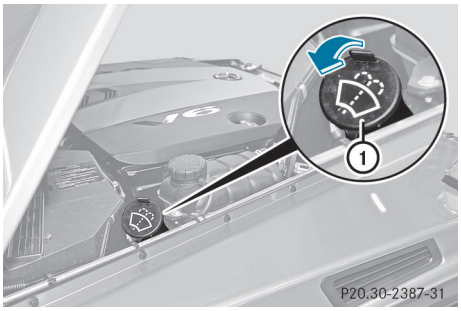

Example: washer fluid reservoir

- ▶ Mix the windshield washer fluid in a container beforehand.
- ▶ **At temperatures above freezing:** fill the washer fluid reservoir with a mix of water and windshield washer concentrate (e.g. MB SummerFit).
- ▶ **At temperatures below freezing:** fill the washer fluid container with a mix of water and MB SummerFit windshield washer concentrate. For information on the mixing ratio, see (▷ page 277) or use the premixed windshield washer solution with antifreeze available in specialist stores.
- ▶ **To open:** pull cap ① upwards by the tab.
- ▶ Add the premixed washer fluid.
- ▶ **To close:** press cap ① onto the filler neck until it engages.

Brake fluid level

! If you notice that the brake fluid level in the brake fluid reservoir has fallen to the MIN mark or less, check the brake system immediately for leaks. Also check the thickness of the brake linings. Visit a qualified specialist workshop immediately.

Do not add brake fluid. This does not correct the error.

Only check the brake fluid level when the vehicle is stationary and on a level surface.

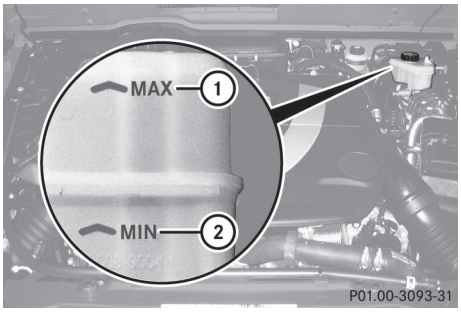

The brake fluid level is correct if it is between MIN marking ② and MAX marking ① on the brake fluid reservoir.

Maintenance

Service interval display

Service messages

Information on the type of service and service intervals (see separate Maintenance Booklet).

You can obtain further information from an authorized Mercedes-Benz Center or at http://www.mbusa.com (USA only).

The service interval message informs you of the next service due date.

If a service due date has been exceeded, you also hear a warning tone.

The multifunction display shows a service message for several seconds, e.g.:

Service A In 99999 Miles

Service A Due Now

Service A Exceeded By 99999 Miles

The symbol and the letter indicate which type of service is due:

Minor service A

Major service B

The service interval display does not take into account any periods of time during which the battery is disconnected.

Maintaining the time-dependent service schedule:

▶ Before disconnecting the battery, note down the service due date displayed.

or:

▶ After reconnecting the battery, subtract the battery disconnection periods from the service date shown on the display.

ⓘ The service interval display should not be confused with the engine oil level display.

Hiding a service message

▶ Press the reset button on the left of the instrument cluster (▷ page 25).

Displaying service messages

Use the buttons on the multifunction steering wheel.

▶ Switch on the ignition.

▶ Press the or button on the steering wheel to select the **standard display** menu (▷ page 156).

▶ With or select the service interval display.
The or service symbol and the service due date are displayed.

Please bear the following in mind

A qualified specialist workshop will reset the service interval display after the necessary service work has been carried out.

Further information, on maintenance for example, can be obtained at an authorized Mercedes-Benz Center or directly from Mercedes-Benz.

! If the service interval display has been reset unintentionally, have the setting corrected at a Mercedes-Benz Center.

Have service work carried out as described in the Maintenance Booklet. This may otherwise lead to increased wear and damage to the major assemblies or the vehicle.

Fuel/water separator

If the fuel/water separator needs servicing, the following message appears in the multifunction display:

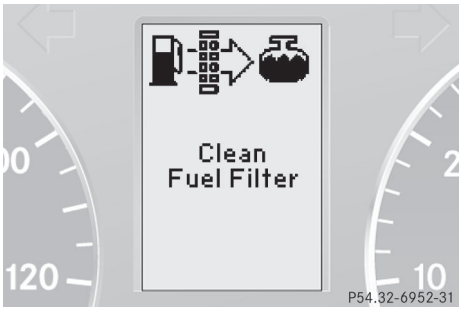

You will also hear a brief warning tone.

▶ Visit a qualified specialist workshop as soon as possible.

! If you continue driving without having the fuel/water separator serviced, this could cause damage to the engine. Any resulting damage is not covered by the warranty.

Environmental note

Dispose of service products in an environmentally responsible manner.

Care

Notes on care

Regular care of your vehicle is a condition for retaining the quality in the long term.

Use care products and cleaning agents recommended and approved by Mercedes-Benz.

WARNING

Many cleaning products can be hazardous. Some are poisonous, others are flammable. Always follow the instructions on the particular container. Always open your

vehicle's doors or windows when cleaning the inside.

Never use fluids or solvents that are not designed for cleaning your vehicle.

Always lock away cleaning products and keep them out of reach of children.

! For cleaning your vehicle, do not use any of the following:

- dry, rough or hard cloths
- abrasive cleaning agents
- solvents
- cleaning agents containing solvents

Do not scrub.

Do not touch the surfaces or protective films with hard objects, e.g. a ring or ice scraper. You could otherwise scratch or damage the surfaces and protective film.

Environmental note

Dispose of empty packaging and cleaning cloths in an environmentally responsible manner.

! Do not park the vehicle for an extended period straight after cleaning it, particularly after having cleaned the wheels with wheel cleaner. Wheel cleaners could cause increased corrosion of the brake discs and brake pads/linings. For this reason, you should drive for a few minutes after cleaning. Braking heats the brake discs and the brake pads/linings, thus drying them. The vehicle can then be parked.

Exterior care

Automatic car wash

WARNING

Braking efficiency is reduced after washing the vehicle. This could cause an accident. For this reason, you must drive particularly carefully after washing the vehicle until the brakes have dried.

You can wash the vehicle in an automatic car wash from the very start.

! Never clean your vehicle in a Touchless Automatic Car Wash as these use special cleaning agents. These cleaning agents can damage the paintwork or plastic parts.

If the vehicle is very dirty, pre-wash it before cleaning it in an automatic car wash.

! Make sure that the automatic car wash is suitable for the size of the vehicle. Fold in the exterior mirrors before the vehicle is washed. The exterior mirrors could otherwise be damaged.

! Make sure that the automatic transmission is in position **N** when washing your vehicle in a tow-through car wash. The vehicle could be damaged if the transmission is in another position.

! Make sure that:

- the side windows and sliding sunroof are closed completely.
- the blower for the ventilation/heating is switched off (airflow control is turned to position **0**/the AUTO and A/C REST buttons are switched off).
- the windshield wiper switch is at position **0**.

The vehicle could otherwise be damaged.

After using an automatic car wash, wipe off wax from the windshield and the wiper blades. This will prevent smears and reduce wiping noises caused by residue on the windshield.

Washing by hand

When using the vehicle in winter, remove all traces of road salt deposits carefully and as soon as possible.

When washing the vehicle underbody, also clean the inside of the wheels.

▶ Do not use hot water and do not wash the vehicle in direct sunlight.

▶ Use a soft sponge to clean.

- ▶ Use a mild cleaning agent, such as a car shampoo approved by Mercedes-Benz.
- ▶ Thoroughly hose down the vehicle with a gentle jet of water.
- ▶ Do not point the water jet directly towards the air inlets.
- ▶ Use plenty of water and rinse out the sponge frequently.
- ▶ Rinse the vehicle with clean water and dry thoroughly with a chamois.
- ▶ Do not let the cleaning agent dry on the paintwork.

Power washers

⚠ **WARNING**

Do not use power washers with circular jet nozzles (concentrated-power jets) to clean your vehicle, especially for cleaning tires. You could otherwise damage the tires and cause an accident.

! Always maintain a distance of at least 11.8 in (30 cm) between the vehicle and the power washer nozzle. Information about the correct distance is available from the equipment manufacturer.

Move the power washer nozzle around when cleaning your vehicle.

Do not aim directly at any of the following:

- tires
- door gaps, roof gaps, joints, etc.
- electrical components
- battery
- connectors
- lights
- seals
- trim
- ventilation slots

Damaged seals or electrical components can lead to leaks or failures.

Cleaning the wheels

! Do not use acidic wheel cleaning products to remove brake dust. This could damage wheel bolts and brake components.

! Do not park the vehicle for an extended period straight after cleaning it, particularly after having cleaned the wheels with wheel cleaner. Wheel cleaners could cause increased corrosion of the brake discs and brake pads/linings. For this reason, you should drive for a few minutes after cleaning. Braking heats the brake discs and the brake pads/linings, thus drying them. The vehicle can then be parked.

Cleaning the paintwork

Scratches, corrosive deposits, areas affected by corrosion and damage caused by inadequate care cannot always be completely repaired. In such cases, visit a qualified specialist workshop.

- ▶ Remove dirt immediately, where possible, while avoiding rubbing too hard.
- ▶ Soak insect remains with insect remover and rinse off the treated areas afterwards.
- ▶ Soak bird droppings with water and rinse off the treated areas afterwards.
- ▶ Remove coolant, brake fluid, tree resin, oils, fuels and greases by rubbing gently with a cloth soaked in petroleum ether or lighter fluid.
- ▶ Use tar remover to remove tar stains.
- ▶ Use silicone remover to remove wax.

! Do not affix:

- stickers
- films
- magnetic plates or similar items

to painted surfaces. You could otherwise damage the paintwork.

If water no longer forms "beads" on the paint surface, use the paint care products recommended and approved by Mercedes-Benz. This is the case approximately every

three to five months, depending on the climate conditions and the care product used.

If dirt has penetrated the paint surface or if the paint has become dull, the paint cleaner recommended and approved by Mercedes-Benz should be used.

Do not use these care products in the sun or on the hood while the hood is hot.

▶ Use a suitable touch-up stick, e.g. MB Touch-Up Stick, to correct smaller areas of paint damage quickly and provisionally.

Matte finish care

If your vehicle has a clear matte finish, observe the following instructions in order to avoid damage to the paintwork due to incorrect care.

These notes also apply to light alloy wheels with a clear matte finish.

! Never polish the vehicle or the light alloy wheels. Polishing causes the finish to shine.

! Never use paint cleaner, buffing or polishing products, or gloss preserver, e.g. wax. These products are only suitable for high-gloss surfaces. Their use on vehicles with matte finish leads to considerable surface damage (shiny, spotted areas).

Always have paintwork repairs carried out at a qualified specialist workshop.

! Do not use wash programs with a hot wax treatment under any circumstances.

ⓘ Use only insect remover and car shampoo from the range of recommended and approved Mercedes-Benz care products.

Cleaning the windows

⚠ **WARNING**

Switch off the windshield wipers and remove the SmartKey from the ignition lock before cleaning the windshield or the wiper blades. The windshield wipers could otherwise move and injure you.

▶ Clean the inside and outside of the windows with a damp cloth and a cleaning agent that is recommended and approved by Mercedes-Benz.

! Do not use dry cloths, abrasive products, solvents or cleaning agents containing solvents to clean the inside of the windows. Do not touch the insides of the windows with hard objects, e.g. an ice scraper or ring. There is otherwise a risk of damaging the windows.

! Clean the water drainage channels of the windshield and the rear window at regular intervals. Deposits such as leaves, petals and pollen may under certain circumstances prevent water from draining away. This can lead to corrosion damage and damage to electronic components.

Cleaning the wiper blades

⚠ **WARNING**

Switch off the windshield wipers and remove the SmartKey from the ignition lock before cleaning the windshield or the wiper blades. The windshield wipers could otherwise move and injure you.

! Do not pull the wiper blade. Otherwise, the wiper blade could be damaged.

! Do not clean wiper blades too often and do not rub them too hard. Otherwise, the graphite coating could be damaged. This could cause wiper noise.

▶ Fold the wiper arms away from the windshield.

▶ Carefully clean the wiper blades with a damp cloth.

▶ Fold the windshield wipers back again before switching on the ignition.

! Hold the wiper arm securely when folding back. The windshield could be damaged if the wiper arm smacks against it suddenly.

Cleaning the headlamps

▶ Clean the headlamp lenses with a damp sponge and a mild cleaning agent, e.g. Mercedes-Benz car shampoo or cleaning cloths.

! Only use cleaning agents or cleaning cloths which are suitable for plastic headlamp lenses. Unsuitable cleaning agents or cleaning cloths could scratch or damage the plastic headlamp lenses.

Cleaning the sensors

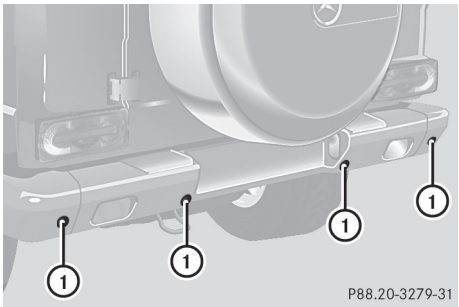

▶ Clean sensors ① of the driving systems with water, car shampoo and a soft cloth.

! When cleaning the sensors with a power washer, maintain a distance between the vehicle and the nozzle of the power washer of at least 11.8 in (30 cm). Information about the correct distance is available from the equipment manufacturer.

Cleaning the rear view camera

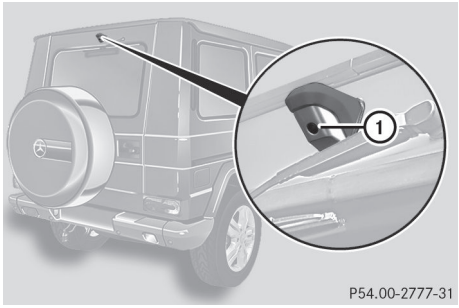

▶ Use clear water and a soft cloth to clean camera lens ①.

! Do not clean the camera lens and the area around the rear view camera with a power washer.

Cleaning chrome parts

Impurities combined with the effects of road grit and corrosive environmental factors may cause flash rust to form on the surface. You can restore the original shine of the chrome parts by cleaning them regularly, especially in winter and after washing.

! Do not clean chrome parts e.g. the exhaust tail pipes (G 55 AMG) or stainless-steel spare hub cap with alkaline-based cleaning agents such as wheel cleaner.

▶ Clean the chrome parts with a chrome care product tested and approved by Mercedes-Benz.

Interior care

Cleaning the display

▶ Before cleaning the display, make sure that it is switched off and has cooled down.

▶ Clean the display surface using a commercially available microfiber cloth and TFT/LCD display cleaner.

▶ Dry the display surface using a dry microfiber cloth.

! For cleaning, do not use any of the following:

- alcohol-based thinner or gasoline
- abrasive cleaning agents
- commercially-available household cleaning agents

These may damage the display surface. Do not put pressure on the display surface when cleaning. This could lead to irreparable damage to the display.

Cleaning the plastic trim

⚠ **WARNING**

When cleaning the steering wheel boss and dashboard, do not use cockpit sprays or cleaning agents containing solvents. Cleaning agents containing solvents cause the surface to become porous, and as a result, plastic parts may break away and be thrown around the interior when an air bag is deployed, which may result in severe injuries.

! Do not affix the following to plastic surfaces:

- stickers
- films
- scented oil bottles or similar items

You can otherwise damage the plastic.

! Do not allow cosmetics, insect repellent or sunscreen to come into contact with the plastic trim. This maintains the high-quality look of the surfaces.

▶ Wipe the plastic trim with a damp, lint-free cloth, e.g. a microfiber cloth.

▶ **Heavy soiling:** use car care and cleaning products recommended and approved by Mercedes-Benz.
The surface may change color temporarily. Wait until the surface is dry again.

Cleaning the steering wheel and gear or selector lever

▶ Thoroughly wipe with a damp cloth or use leather care agents that have been recommended and approved by Mercedes-Benz.

Cleaning wooden trim and trim strips

▶ Wipe the wooden trim and trim strips with a damp, lint-free cloth, e.g. a microfiber cloth.

▶ **Heavy soiling:** use car care and cleaning products recommended and approved by Mercedes-Benz.

! Do not use solvent-based cleaning agents such as tar remover, wheel cleaners, polishes or waxes. There is otherwise a risk of damaging the surface.

! Do not use chrome polish for trim strips. The trim strips have a chrome look but are mostly made of anodized aluminum and can lose their shine if chrome polish is used. Use a damp, lint-free cloth instead when cleaning the trim strips.

If the chrome-plated trim strips are very dirty, you can use a chrome polish. If you are unsure as to whether the trim strips are chrome-plated or not, consult an authorized Mercedes-Benz Center.

Cleaning the seat covers

! Do not use microfiber cloths to clean genuine leather or artificial leather covers, as these are too aggressive and, if used often, may damage the cover.

! Observe the following when cleaning:

- clean genuine leather covers carefully with a damp cloth and then wipe the covers down with a dry cloth. Make sure that the leather does not become soaked. It may otherwise become rough and cracked. Only use leather care agents that have been tested and approved by Mercedes-Benz. You can obtain these from a qualified specialist workshop.
- clean artificial leather covers with a cloth moistened with a solution containing 1% detergent (e.g. dishwashing liquid).
- clean cloth covers with a microfiber cloth moistened with a solution containing 1% detergent (e.g. dishwashing liquid). Rub carefully and always wipe entire seat sections to avoid leaving visible lines. Leave the seat to dry afterwards. Cleaning results depend on the type of dirt and how long it has been there.

ⓘ Note that regular care is essential to ensure that the appearance and comfort of the covers is retained over time.

Cleaning the seat belts

▶ Use clean, lukewarm water and soap solution.

! Do not clean the seat belts using chemical cleaning agents. Do not dry the seat belts by warming them above 176 °F (80 °C) or placing them in direct sunlight.

⚠ **WARNING**

Do not bleach or dye seat belts as this may severely weaken them. In a crash, they may not be able to provide adequate protection.

Cleaning the headliner and carpets

▶ **Headliner:** if it is very dirty, use a soft brush or dry shampoo.

▶ **Carpets:** use the carpet and textile cleaning agents recommended and approved by Mercedes-Benz.

Useful information 224
Where will I find...? 224
Flat tire 226
Battery 230
Jump-starting 233
Towing and tow-starting 235
Fuses 237

Useful information

ℹ This Operator's Manual describes all models and all standard and optional equipment of your vehicle available at the time of publication of the Operator's Manual. Country-specific differences are possible. Please note that your vehicle may not be equipped with all features described. This also applies to safety-related systems and functions.

ℹ Please read the information on qualified specialist workshops (▷ page 20).

Where will I find...?

First-aid kit

ℹ Check the expiration date on the first-aid kit at least once a year. Replace the contents if necessary, and replace missing items.

The first-aid kit is located in the stowage compartment in the front-passenger door.

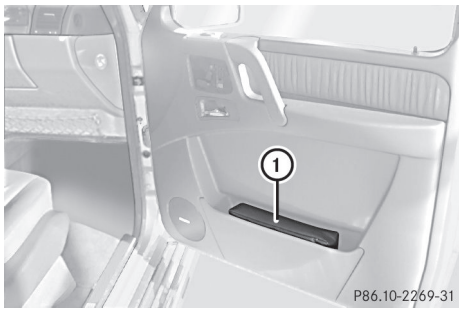

▶ Remove first-aid kit ① from the stowage space.

Vehicle tool kit

General notes

ℹ Vehicles are not equipped with the tools needed to change a wheel when they leave the factory, e.g. a jack or lug wrench. Some tools for changing a wheel are specific to the vehicle. To obtain tools approved for your vehicle, contact a qualified specialist workshop.

The vehicle tool kit contains:

- a vehicle tool kit with:
  - a fuse extractor
  - an Allen key, e.g. to operate the sliding roof manually in an emergency
  - a pump lever for the vehicle jack
  - a screwdriver
  - a lug wrench
- a jack

Vehicle tool kit

The vehicle tool kit is under the cover in the footwell in front of the rear bench seat.

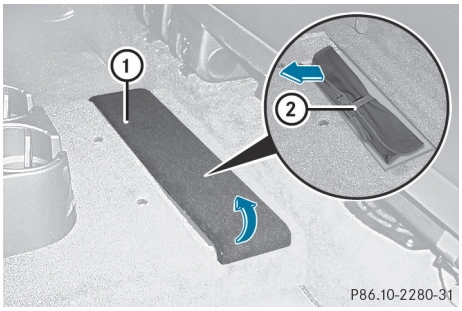

▶ Fold cover ① to the side.

▶ Pull vehicle tool kit ② out by the tab.

Jack

The jack is located under the rear bench seat on the right-hand side when viewed in the direction of travel.

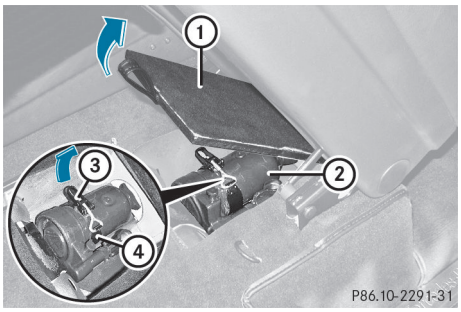

- ▶ Fold the rear bench seat forward (▷ page 191).
- ▶ Open cover ①.
- ▶ Pull bar ③ upwards and detach from tab ④.
- ▶ Take out jack ②.

! Make sure that, while installing the vehicle jack, there are no cables on the holder, in order to avoid them becoming trapped.

! Make sure that, while installing the vehicle jack, there are no cables on the holder, in order to avoid them becoming trapped.

Exterior spare wheel bracket

General notes

⚠ **WARNING**

If the spare tire is more than 6 years old or is not the same model as the regular tires, have the spare tire replaced with a new tire at the nearest Mercedes-Benz Center.

Never operate the vehicle with more than one spare wheel mounted.

⚠ **WARNING**

G 55 AMG:

Rim and tire sizes are different for the spare wheel and the normal wheel. With the spare wheel mounted, handling is impaired.

Do not exceed a maximum speed of 50 mph(80 km/h).

The spare wheel is on the outer side of the rear door.

Removing the cover

Stainless-steel spare hub cap

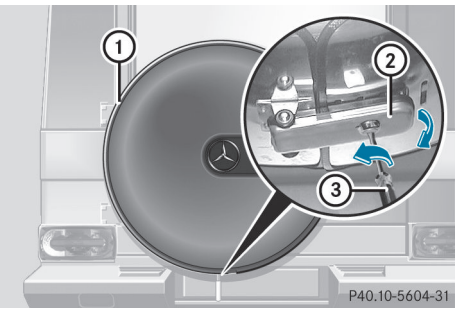

- ▶ Remove the screwdriver from the vehicle tool kit (▷ page 224).
- ▶ Open the lock on cover ring ① with screwdriver ③ or a similar tool.
- ▶ Fold tab ② down.

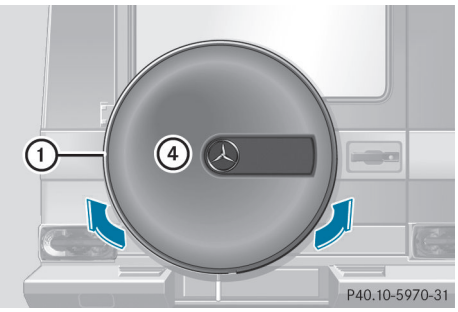

- ▶ Pull cover ring ① apart and remove it.
- ▶ Pull off cover panel ④.

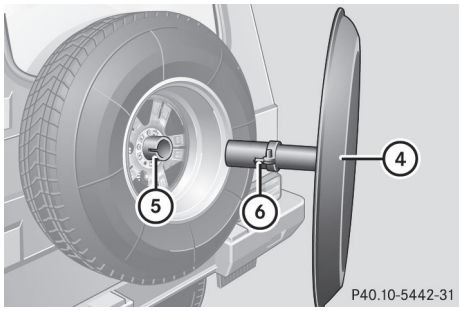

ℹ When refitting cover panel ④, make sure that retainer ⑥ engages in recess ⑤.

Removing the spare wheel

⚠ **WARNING**

Make sure no one is injured when removing the spare wheel.

Grip wheel from the sides.

Keep hands from beneath the wheel.

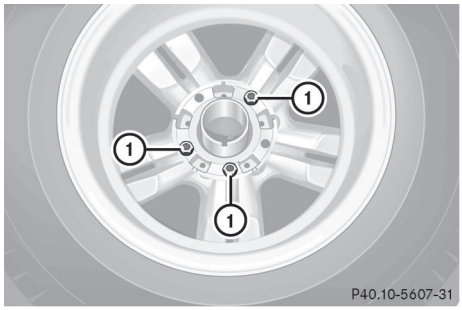

- ▶ Remove wheel nuts ①.
- ▶ Remove the spare wheel.

Mounting the wheel

After changing a wheel:

- ▶ Repair or replace the damaged wheel as soon as possible and secure the spare wheel in place again.
- ▶ Secure the damaged wheel on the spare wheel bracket with wheel nuts ①. When doing so, make sure that the wheel cannot come loose.
- ▶ When refitting cover panel ④, make sure that retainer ⑥ engages in recess ⑤(▷ page 225).
- ▶ Make sure that tab ② is below when refitting cover ring ① (▷ page 225).
- ▶ For safety reasons, regularly check to ensure that the wheel is securely fastened.

Flat tire

Preparing the vehicle

- ▶ Stop the vehicle as far away as possible from traffic on solid, non-slippery and level ground.
- ▶ Switch on the hazard warning lamps.
- ▶ Apply the parking brake.
- ▶ Bring the front wheels into the straight-ahead position.
- ▶ Move the selector lever to **P**.
- ▶ Switch off the engine.
- ▶ Remove the SmartKey from the ignition lock.
- ▶ All occupants must get out of the vehicle. Make sure that they are not endangered as they do so.
- ▶ Make sure that no one is near the danger area while a wheel is being changed. Anyone who is not directly assisting in the wheel change should, for example, stand behind the barrier.
- ▶ Get out of the vehicle. Pay attention to traffic conditions when doing so.
- ▶ Close the driver's door.

Changing a wheel and mounting the spare wheel

Important safety notes

⚠ **WARNING**

If the spare tire is more than 6 years old or is not the same model as the regular tires, have

the spare tire replaced with a new tire at the nearest Mercedes-Benz Center.

Never operate the vehicle with more than one spare wheel mounted.

⚠ **WARNING**

G 55 AMG:

Rim and tire sizes are different for the spare wheel and the normal wheel. With the spare wheel mounted, handling is impaired.

Do not exceed a maximum speed of 50 mph(80 km/h).

Preparing the vehicle

▶ Prepare the vehicle as described (▷ page 226).

⚠ **WARNING**

You must remove the spare wheel from the spare wheel carrier before lifting the vehicle. Otherwise the vehicle could fall off the jack and injure you or others.

▶ Remove the vehicle tool kit and the jack (▷ page 224).

▶ Remove the spare wheel from the spare wheel bracket (▷ page 225).

ℹ Vehicles without a spare wheel/emergency spare wheel are not equipped with a tire-change tool kit at the factory. For more information on which tools are required to perform a wheel change on your vehicle e.g. lug wrench or jack, consult an authorized Mercedes-Benz Center.

Securing the vehicle to prevent it from rolling away

▶ Secure the vehicle to prevent it from rolling away.

On level ground: place chocks or similar items under the front and rear of the wheel that is diagonally opposite to the wheel you wish to change.

▶ **On downhill gradients:** place chocks or similar items behind both wheels of the other axle.

⚠ **WARNING**

Only jack up the vehicle on level ground or on slight inclines/declines. The vehicle could otherwise fall off the jack and injure you or others.

Raising the vehicle

⚠ **WARNING**

When jacking up the vehicle, only use the jack which has been specifically approved by Mercedes-Benz for your vehicle.

The jack is designed exclusively for jacking up the vehicle under the axle housing. Make sure the jack is positioned correctly under the axle housing. The jack must always be vertical when in use, especially on inclines or declines.

The jack is intended only for lifting the vehicle briefly for wheel changes. It is not suited for performing maintenance work under the vehicle. To help avoid personal injury, use the jack only to lift the vehicle during a wheel change.

Never get beneath the vehicle while it is supported by the jack. Keep hands and feet away from the area under the lifted vehicle. Always lower the vehicle onto sufficient capacity jackstands before working under the vehicle.

Always firmly engage the parking brake and block the wheels with wheel chocks or other sizeable objects before raising the vehicle with the jack. Do not disengage the parking brake while the vehicle is raised.

Make sure that the ground on which the vehicle is standing and where you place the jack is solid, level and not slippery. If necessary, use a large underlay. On slippery

surfaces, such as tiled floors, you should use a non-slip underlay, for example a rubber mat.

Do not use wooden blocks or similar objects to support the jack. Otherwise the jack may not be able to achieve its load-bearing capacity if it is not at its full height.

Never start the engine when the vehicle is raised.

Also observe the notes on the jack.

P40.10-5444-31

▶ Using lug wrench ①, loosen the bolts on the wheel you wish to change by about one full turn. Do not unscrew the wheel bolts completely.

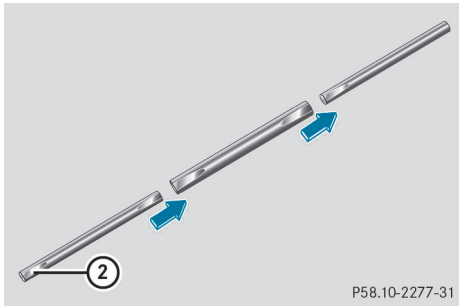

P58.10-2277-31

② Notch on pump lever

▶ Assemble the pump lever for the jack. It can be found with the vehicle tool kit (▷ page 224).

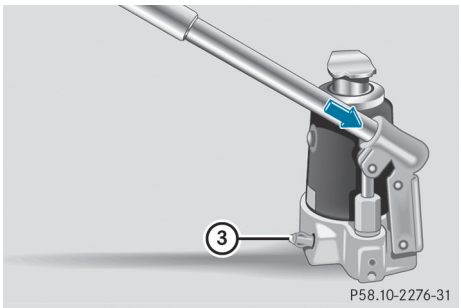

P58.10-2276-31

▶ Turn pressure release screw ③ clockwise as far as it will go using notch ② on the pump lever.
Pressure release screw ③ is closed.

ℹ Never turn pressure release screw ③ by more than one to two revolutions. Otherwise, hydraulic fluid could escape.

! The jack is designed exclusively for jacking up the vehicle at the jacking points. Otherwise, your vehicle could be damaged.

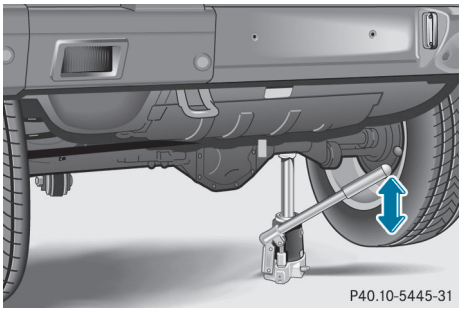
P40.10-5445-31

▶ Place the jack on solid ground.

▶ Position the jack at the front or rear axle carrier tubes The jack must always stand vertically, even on slopes.

Make sure that the jack is placed in the correct position beneath the axle carrier tube. The front or rear axle must fit into the support on the jack.

▶ Raise the vehicle by pumping (arrow) until the tire is a maximum of 1.2 inches (3 cm) above the ground.

Removing a wheel

▶ Unscrew the wheel bolts.

! Do not place wheel bolts in sand or on a dirty surface. The bolt and wheel hub threads could otherwise be damaged when you screw them in.

▶ Remove the wheel.

Mounting a new wheel

⚠ **WARNING**

Always replace wheel bolts that are damaged or rusted.

Never apply oil or grease to wheel bolts.

Damaged wheel hub threads should be repaired immediately. Do not continue to drive under these circumstances! Contact an authorized Mercedes-Benz Center or call Roadside Assistance.

Incorrect wheel bolts or improperly tightened wheel bolts can cause the wheel to come off. This could cause an accident. Make sure to use the correct wheel bolts.

⚠ **WARNING**

Only use genuine Mercedes-Benz wheel bolts. Other wheel bolts may come loose.

Do not tighten the wheel bolts when the vehicle is raised. Otherwise, the vehicle could fall off the jack.

▶ Clean the wheel and wheel hub contact surfaces.

! To prevent damage to the paintwork, hold the wheel securely against the wheel hub while screwing in the first wheel bolt.

▶ Place the wheel on the wheel hub and push it on.

▶ Tighten the wheel bolts until they are finger-tight.

Lowering the vehicle

▶ Open the pressure release screw on the jack using the pump lever (▷ page 227) by approximately one turn.

▶ Lower the vehicle until it is once again standing firmly on the ground.

▶ Place the jack to one side.

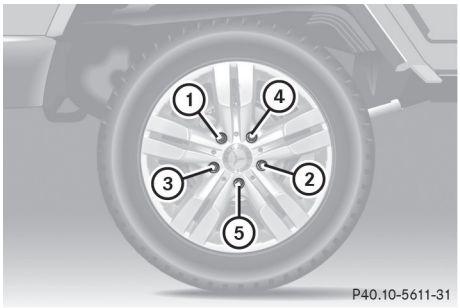

▶ Tighten the wheel bolts evenly in a crosswise pattern in the sequence indicated (① to ⑤). The tightening torque must be 96 lb-ft (130 Nm).

⚠ **WARNING**

Have the tightening torque checked after changing a wheel. The wheels could come loose if they are not tightened to a torque of 96 lb-ft (130 Nm).

▶ Disassemble the pump lever.

▶ Push the jack piston back in and close the drain plug.

▶ Use the bolts to secure the faulty wheel to the spare wheel bracket (▷ page 225).

▶ Cover the faulty wheel with the tire cover provided.

▶ Put the jack and the rest of the vehicle tool kit away.

▶ Check the tire pressure and correct it, if necessary.

A table with the tire pressures for your vehicle can be found on the B-pillar on the driver's side.

Battery

Important safety notes

In order for the battery to achieve the maximum possible service life, it must always be sufficiently charged.

! Have the battery checked regularly at a qualified specialist workshop.
Observe the service intervals in the Maintenance Booklet or contact a qualified specialist workshop for more information.

Have the battery charge checked more frequently if you use the vehicle mainly for short trips or if you leave it standing idle for a lengthy period.

Only replace a battery with a battery that has been recommended by Mercedes-Benz.

Consult a qualified specialist workshop if you wish to leave your vehicle parked for a long period of time.

⚠ WARNING

Comply with safety precautions and take protective measures when handling batteries.

Risk of explosion

Fire, naked flames and smoking are prohibited when handling the battery. Avoid creating sparks.

Battery acid is caustic. Avoid contact with the skin, eyes or clothing.

Wear suitable protective clothing, in particular gloves, an apron and a face mask.

Immediately rinse acid splashes off with clean water. Consult a doctor if necessary.

Wear eye protection.

Keep children away.

Observe this Operator's Manual.

Environmental note

Batteries contain dangerous substances. It is against the law to dispose of them with the household rubbish. They must be collected separately and recycled to protect the environment.

Dispose of batteries in an environmentally friendly manner. Return discharged batteries to a qualified specialist workshop or to a special collection point for used batteries.

⚠ WARNING

Failure to follow these instructions can result in severe injury or death.

Never lean over batteries while connecting. You might get injured.

Battery fluid contains sulfuric acid. Do not allow this fluid to come in contact with eyes, skin or clothing. In case it does, immediately flush affected area with water and seek medical help if necessary.

A battery will also produce hydrogen gas, which is flammable and explosive. Keep flames or sparks away from battery, avoid improper connection of jumper cables, smoking etc.

⚠ **WARNING**

Do not place any metal objects on the battery as this could result in a short circuit.

Use leak-proof batteries only to avoid the risk of acid burns in the event of an accident.

Take care that you do not become statically charged, e.g. by wearing synthetic clothing or rubbing against textiles. For this reason, you also should not pull or push the battery over carpets or other synthetic materials.

Never touch the battery first. First, touch the outside body of the vehicle in order to release any possible electrostatic charges.

Do not rub the battery with rags or cloths. The battery could explode if touched due to electrostatic charge or due to spark formation.

! Switch off the engine and remove the SmartKey before you loosen or disconnect the terminal clamps. You may otherwise destroy electronic components such as the alternator.

! Like other batteries, the vehicle battery may discharge over time if you do not use the vehicle. In this case, have the battery disconnected at a qualified specialist workshop. You can also charge the battery with a charger recommended by Mercedes-Benz. Contact a qualified specialist workshop for further information.

The battery and the cover of the positive terminal clamp must be installed securely during operation.

ⓘ Remove the SmartKey if you park the vehicle and do not require any electrical consumers. The vehicle will then use very little energy, thus conserving battery power.

Mercedes-Benz recommends that you do not carry out work on batteries yourself, e.g. removing or charging. Have this work performed at a qualified specialist workshop.

ⓘ If the power supply has been interrupted, e.g. if the battery has been reconnected, you must carry out the following tasks:

- reset the head restraints on the front seats (▷ page 78).

Charging the battery

⚠ **WARNING**

Never charge a battery still installed in the vehicle unless a battery charger unit approved by Mercedes-Benz is being used. Gases may escape during charging and cause explosions that may result in paint damage, corrosion or personal injury.

A battery charger unit specially adapted for Mercedes-Benz vehicles and tested and approved by Mercedes-Benz is available as an accessory. It permits the charging of the battery in its installed position. Contact an authorized Mercedes-Benz Center for further information and availability.

Charge the battery in accordance with the separate instructions for the battery charger.

⚠ **WARNING**

There is a risk of acid burns during the charging process due to the gases which escape from the battery. Do not lean over the battery during the charging process.

⚠ **WARNING**

Battery acid is caustic. Avoid contact with the skin, eyes or clothing.

! Only charge the installed battery with a battery charger which has been tested and approved by Mercedes-Benz. These battery chargers allow the battery to be charged while still installed.

! Only use battery chargers with a maximum charging voltage of 14.8 V.

! Only charge the battery using the jump-starting connection point.

The jump-starting connection point is in the engine compartment (▷ page 233).

- ▶ Open the hood (▷ page 210).
- ▶ Connect the battery charger to the positive terminal and earth point in the same order as when connecting the donor battery in the jump-starting procedure (▷ page 233).
- ▶ Read the battery charger's operating instructions before charging the battery.

Jump-starting

⚠ **WARNING**

Failure to follow these directions will cause damage to the electronic components, and can lead to a battery explosion and severe injury or death.

Never lean over batteries while connecting or jump starting. You might get injured.

Battery fluid contains sulfuric acid. Do not allow this fluid to come in contact with eyes, skin or clothing. In case it does, immediately flush affected area with water, and seek medical help if necessary.

A battery will also produce hydrogen gas, which is flammable and explosive. Keep flames or sparks away from battery, avoid improper connection of jumper cables, smoking, etc.

Attempting to jump start a frozen battery can result in it exploding, causing personal injury.

Read all instructions before proceeding.

! Avoid repeated and lengthy starting attempts. Otherwise, non-combusted fuel may damage the catalytic converter and create a risk of fire.

Do not use a rapid charging device to start the vehicle.

Make sure the jumper cables are not damaged.

Make sure the jumper cables are not touching any other metal objects when they are connected to the battery.

If your vehicle's battery is discharged, the engine can be jump-started from another vehicle or from a second battery using jumper cables.

Observe the following points:

- ▶ The battery is not accessible in all vehicles. If the other vehicle's battery is not accessible, jump-start the vehicle using a second battery or a jump-starting device.
- ▶ You may only jump-start the vehicle when the engine and catalytic converter are cold.
- ▶ Do not start the engine if the battery is frozen. Let the battery thaw first.
- ▶ Jump-starting may only be performed from batteries with a nominal voltage of 12 V.
- ▶ Only use jumper cables which have a sufficient cross-section and insulated terminal clamps.
- ▶ Make sure that the jumper cables cannot come into contact with parts, such as the pulley or the fan. These parts move when the engine is started and while it is running.
- ▶ If the battery is fully discharged, leave the battery that is being used to jump-start connected for a few minutes before attempting to start. This charges the empty battery a little.

ⓘ Jumper cables and further information about jump-starting can be obtained from any authorized Mercedes-Benz Center, for example.

- ▶ Make sure that the two vehicles do not touch.
- ▶ Apply the parking brake.
- ▶ Move the selector lever to **P**.
- ▶ Switch off all electrical consumers (e.g. radio, blower, etc.).
- ▶ Open the hood (▷ page 210).

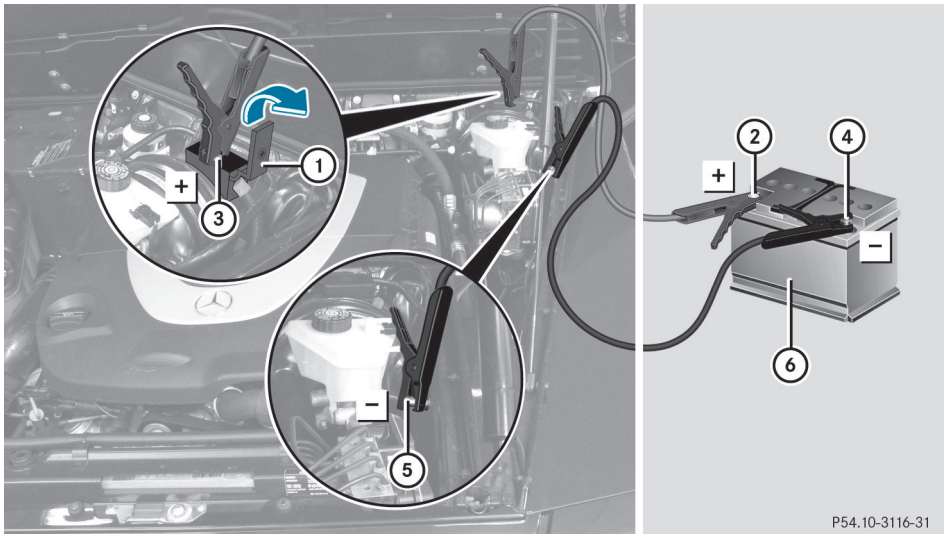

Position number ⑥ identifies the charged battery of the other vehicle or an equivalent jump-starting device.

- ▶ Lift up cover ① of positive terminal ③ in the direction of the arrow.
- ▶ Connect positive terminal ③ on your vehicle to positive terminal ② of donor battery ⑥ using the jumper cable, beginning with your own battery.
- ▶ Start the engine of the donor vehicle and run it at idling speed.
- ▶ Connect negative terminal ④ of donor battery ⑥ to earth point ⑤ of your vehicle using the jumper cable, connecting the jumper cable to donor battery ⑥ first.
- ▶ Start the engine.
- ▶ First, remove the jumper cable from earth point ⑤ and negative terminal ④, then from positive terminal ③ and positive terminal ②, each time disconnecting from the battery on your own vehicle first.
- ▶ Have the battery checked at a qualified specialist workshop.

Towing and tow-starting

Important safety notes

⚠ **WARNING**

If circumstances require towing the vehicle with all wheels on the ground, always tow with a tow bar if:

- the engine will not run
- there is a malfunction in the brake system
- there is a malfunction in the power supply or the vehicle's electrical system

This is necessary to adequately control the towed vehicle.

Prior to towing the vehicle with all wheels on the ground, make sure the SmartKey is in starter switch position **2**.

If the SmartKey is left in starter switch position **0** for an extended period of time, it can no longer be turned in the switch. In this case, the steering is locked. To unlock, remove SmartKey from starter switch and reinsert.

It is better to have the vehicle transported than to have it towed.

! You may only tow the vehicle a maximum distance of 30 miles (50 km). A towing speed of 30 mph (50 km/h) must not be exceeded.

For towing distances over 30 miles (50 km), the vehicle must loaded onto a transporter.

! Only secure the tow cable or tow bar to the towing eyes. You could otherwise damage the vehicle.

! Do not tow with sling-type equipment. This could damage the vehicle.

! Do not use the towing eyes for recovery purposes as this could damage the vehicle. If in doubt, recover the vehicle with a crane.

! When towing, pull away slowly and smoothly. If the tractive power is too high, the vehicles could be damaged.

! Your vehicles is equipped with an automatic transmission. Therefore, you must not have the vehicle tow-started. The transmission may otherwise be damaged.

If the transfer case can be shifted into neutral **N**, you can tow the vehicle.

If the transfer case cannot be shifted into neutral **N**, you can tow the vehicle with one axle raised. Please bear the following in mind:

- remove the propeller shaft between the transfer case and the rolling axle.
- turn the SmartKey to position **1** in the ignition lock.

The battery must be connected and charged. Otherwise, you:

- cannot turn the SmartKey to position **2** in the ignition lock
- cannot shift the automatic transmission to position **N**

ℹ Deactivate the automatic locking feature (▷ page 161) You could otherwise be locked out when pushing or towing the vehicle.

Towing eyes

Towing eyes, front

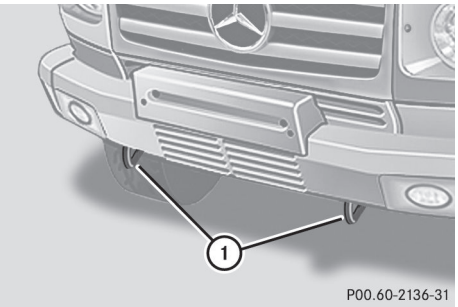

① Towing eyes, front

Towing eye, rear

The rear towing eye is located under the bumper, on the left-hand side when viewed in the direction of travel.

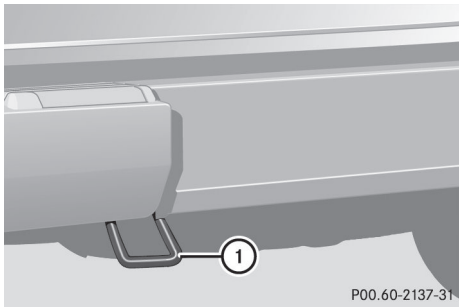

① Towing eye, rear

Towing a vehicle with both axles on the ground

It is important that you observe the safety instructions when towing away your vehicle (▷ page 235).

⚠ **WARNING**

The power assistance for the steering and the brake force booster do not work when the engine is not running. You will then need much more effort to brake and steer the vehicle. Adapt your style of driving accordingly.

- ▶ Switch on the hazard warning lamps (▷ page 91).

ℹ When towing with the hazard warning lamps switched on, use the combination switch as usual to signal a change of direction. In this case, only the turn signals for the desired direction flash. When the combination switch is reset, the hazard warning lamps start flashing again.

- ▶ Turn the SmartKey to position **2** in the ignition lock.
- ▶ When the vehicle is stationary, depress the brake pedal and keep it depressed.
- ▶ Shift the transfer case to neutral position **N** (▷ page 145).
- ▶ Shift the automatic transmission to position **N**.
- ▶ Release the brake pedal.
- ▶ Release the parking brake.

ℹ The transmission can only change gear if the battery has sufficient charge.

If you cannot move the selector lever to **N**, the propeller shafts to the driven axles must be removed.

Transporting the vehicle

Use the towing eyes to pull the vehicle if it needs to be transported on a trailer or transporter (▷ page 235).

- ▶ Apply the parking brake.
- ▶ Turn the SmartKey to position **2** in the ignition lock.
- ▶ Move the selector lever to **N**.
- ▶ Shift the transfer case to neutral position **N** (▷ page 145).
- ▶ Secure the towing cable to the towing eyes.
- ▶ Make sure that the vehicle cannot roll away.
- ▶ Release the parking brake.
- ▶ Load the vehicle onto the transporter.
- ▶ Apply the parking brake.
- ▶ Shift the automatic transmission to position **P**.
- ▶ Turn the SmartKey to position **0** in the ignition lock and remove it.
- ▶ Secure the vehicle.

! Only lash the vehicle down by the wheels or wheel rims, not by parts of the vehicle such as axle or steering components. Otherwise, the vehicle could be damaged.

Recovering a vehicle that has become stuck

! Pull away smoothly, slowly, and in a straight line when pulling out a vehicle that has become stuck. Excessive tractive power could damage the vehicles.

If the drive wheels get trapped on loose or muddy ground, recover the vehicle with the utmost care, especially so if the vehicle is laden.

Never attempt to recover a vehicle with a trailer attached.

Pull out the vehicle backwards, if possible, using the tracks it made when it became stuck.

Towing in the event of malfunctions

General notes

! If you are removing the propeller shaft, use M10 nuts as spacers on the M8 bolts and secure them with M8 nuts.

New self-locking nuts must be used when the propeller shafts are refitted.

▶ Observe the safety notes as you do so (▷ page 235).

ⓘ Consult an authorized Mercedes-Benz Center.

Engine damage, gear damage or electrical malfunctions

▶ Move the selector lever to **N**(▷ page 120).

▶ Shift the transfer case to neutral position **N** (▷ page 145).

In the event of damage to the transfer case

Have the propeller shafts between the axles and the transfer case removed.

Have the vehicle towed with the front axle raised.

In the event of damage to the front axle

Have the propeller shaft between the rear axle and the transfer case removed.

Have the vehicle towed with the front axle raised.

In the event of damage to the rear axle

Have the propeller shaft between the front axle and the transfer case removed.

Have the vehicle towed with the rear axle raised and with wheel rollers under the front axle.

Fuses

Important safety notes

⚠ **WARNING**

Only use fuses that have been approved for Mercedes-Benz vehicles and that have the correct fuse rating for the systems concerned. Do not attempt to repair or bridge faulty fuses. Using fuses that have not been approved or attempting to repair or bridge faulty fuses could cause the fuse to be overloaded and result in a fire. Have the cause traced and rectified at a qualified specialist workshop.

! Only use fuses that have been approved for Mercedes-Benz vehicles and which have the correct fuse rating for the system concerned. Otherwise, components or systems could be damaged.

The fuses in your vehicle serve to close down faulty circuits. If a fuse blows, all the components on the circuit and their functions stop operating.

Blown fuses must be replaced with fuses of the same rating, which you can recognize by the color and value. The fuse ratings are listed in the fuse allocation chart.

ⓘ If a fuse has blown, contact a breakdown service or an authorized Mercedes-Benz Center.

If a newly inserted fuse also blows, have the cause traced and rectified at a qualified specialist workshop, e.g. an authorized Mercedes-Benz Center.

Before changing a fuse

- ▶ Park the vehicle and apply the parking brake.
- ▶ Switch off all electrical consumers.
- ▶ Remove the SmartKey from the ignition lock.

The fuses are located in various fuse boxes:

- main fuse box on the driver's side of the dashboard
- fuse box in the front-passenger footwell
- fuse box in the transmission tunnel
- fuse box in the battery case

The fuse allocation chart and the spare fuses are in the main fuse box on the dashboard (▷ page 238).

You can find the fuse extractor in the vehicle tool kit (▷ page 224).

Dashboard fuse box

! Do not use a pointed object such as a screwdriver to open the cover in the dashboard. You could damage the dashboard or the cover.

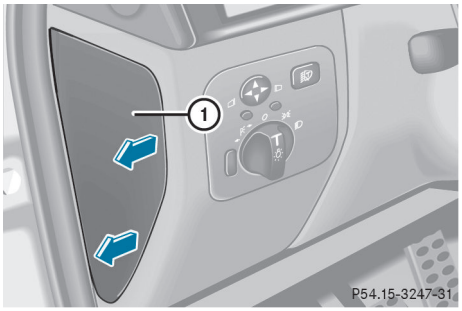

- ▶ Open the driver's door.
- ▶ **To open:** pull cover ① outwards in the direction of the arrow and remove it.

Fuse box in the front-passenger footwell

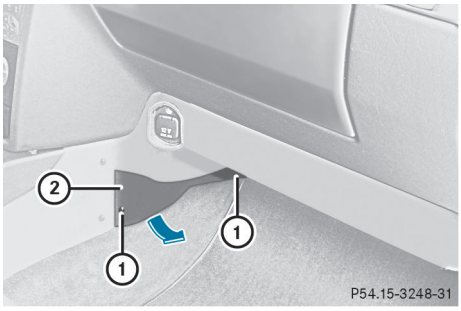

- ▶ To open: remove screws ①.
- ▶ Remove cover ② in the direction of the arrow.

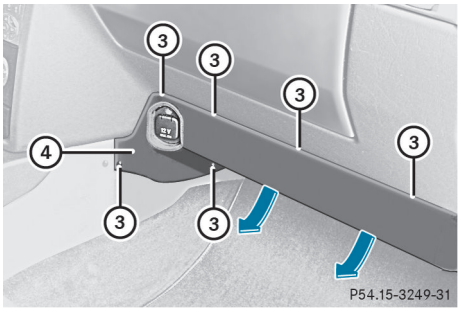

- ▶ Remove screws ③.
- ▶ Remove cover ④ in the direction of the arrow.

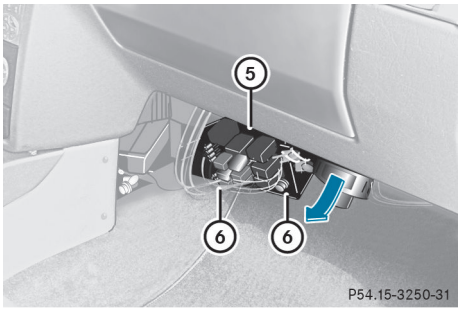

To make it easier to change the fuse, you can fold fuse box ⑤ down slightly:

▶ Remove screws ⑥.

▶ Fold fuse box ⑤ down.

Fuse box in the transmission tunnel

In order to access the fuse box, you have to remove the stop clamps on the front-passenger seat.

⚠ **WARNING**

Do not drive the vehicle when the front end stops are not correctly installed. Failure to reinstall stops as indicated may result in serious injury in certain frontal crashes.

Adjust the front passenger seat as far as possible rearward from the dashboard when the seat is occupied. Comply with information on occupant safety section.

The stop clamps are at the front of the guide rails.

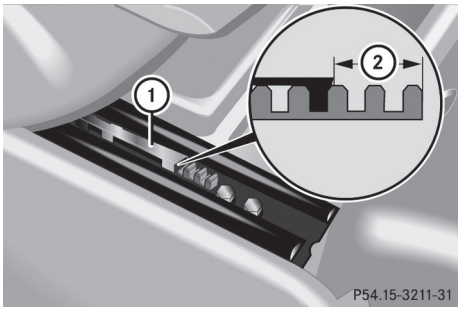

Stop clamp of the right guide rail, reverse image for the left

① Stop clamp

② Spacing

▶ **To remove the stop clamps:** remove both stop clamps ① of the front-passenger seat guide rails using a screwdriver.

! When replacing the stop clamps, make sure you maintain the correct spacing.

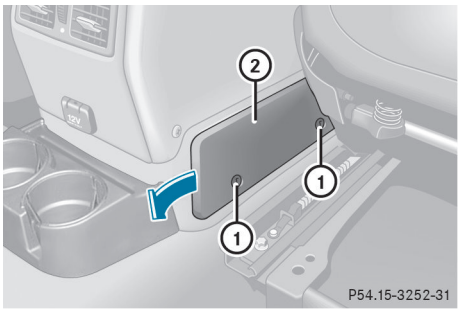

▶ **To open the fuse box:** move the front-passenger seat to its foremost position.

▶ Remove screws ①.

▶ Remove cover ② in the direction of the arrow.

Fuse box in the battery case

The battery case is under a cover in the rear footwell.

The fuses in the battery case do not usually need to be replaced. If a fuse change is necessary, consult a qualified specialist workshop.

! The cover must be positioned properly. Moisture or dirt could otherwise impair the operation of the fuses.

Useful information 242
Important safety notes 242
Operation 242
Winter operation 244
Tire pressure 245
Loading the vehicle 252
Maximum load rating 256
Uniform Tire Quality Grading Standards 257
Tire labeling 258
Definition of terms for tires and loading 262
Changing a wheel 265
Wheel and tire combinations 266

Useful information

ℹ This Operator's Manual describes all models and all standard and optional equipment of your vehicle available at the time of publication of the Operator's Manual. Country-specific differences are possible. Please note that your vehicle may not be equipped with all features described. This also applies to safety-related systems and functions.

ℹ Please read the information on qualified specialist workshops (▷ page 20).

Important safety notes

Consult an authorized Mercedes-Benz Center if you require information on approved and recommended tires and wheels for summer and winter operation. Advice on purchasing and caring for tires is also available there.

⚠ **WARNING**

Replace rims or tires with the same designation, manufacturer and type as shown on the original part. For further information contact an authorized Mercedes-Benz Center. If incorrectly sized rims and tires are mounted, the wheel brakes or suspension components can be damaged. Also, the operating clearance of the wheels and the tires may no longer be correct.

⚠ **WARNING**

Worn, old tires can cause accidents. If the tire tread is worn to minimum tread depth, or if the tires have sustained damage, replace them.

When replacing rims, only use genuine Mercedes-Benz wheel bolts specified for the particular rim type. Failure to do so can result in the bolts loosening and possibly an accident.

Retreaded tires are not tested or recommended by Mercedes-Benz, since previous damage cannot always be recognized on retreads. The operating safety of the vehicle cannot be assured when such tires are used.

⚠ **WARNING**

If you notice sudden significant vibrations or unusual handling performance or if you suspect that damage has occurred to the vehicle, you should activate the hazard warning lamps, gently reduce speed and carefully head for an area that is located at a safe distance from the road.

Check the tires and the underside of the vehicle for damage. If the vehicle seems unsafe, have the vehicle towed away to the nearest Mercedes-Benz Center or tire dealer to be repaired.

⚠ **WARNING**

Do not drive with a flat tire. A flat tire affects the ability to steer or brake the vehicle. You might lose control of the vehicle. Continued driving with a flat tire or driving at high speed with a flat tire will cause excessive heat build-up and possibly a fire.

ℹ Further information about wheels and tires can be obtained from any authorized Mercedes-Benz Center.

Operation

Notes on driving

- If the vehicle is heavily loaded, check the tire pressures and correct them if necessary.
- When parking your vehicle, make sure that the tires do not get deformed by the curb or other obstacles. If it is necessary to drive over curbs, speed humps or similar elevations, try to do so slowly and at an obtuse angle. Otherwise, the tires, particularly the sidewalls, can get damaged.

Notes on regularly inspecting wheels and tires

⚠ **WARNING**

Regularly check the tires for damage. Damaged tires can cause tire inflation pressure loss. As a result, you could lose control of your vehicle.

Worn, old tires can cause accidents. If the tire tread is worn to minimum tread depth, or if the tires have sustained damage, replace them.

- Regularly check the wheels and tires of your vehicle for damage (e.g. cuts, punctures, tears, bulges on tires and deformation or cracks or severe corrosion on wheels) at least once a month, as well as after driving off-road or on rough roads. Damaged wheels can cause a loss of tire pressure.
- Regularly check the tire tread depth and the condition of the tread across the whole width of the tire (▷ page 243). If necessary, turn the front wheels to full lock in order to inspect the inner side of the tire surface.
- All wheels must have a valve cap to protect the valve against dirt and moisture. Do not install anything onto the valve (such as tire pressure monitoring systems) other than the standard valve cap or other valve caps approved by Mercedes-Benz for your vehicle.
- You should regularly check the pressure of all your tires including the spare wheel, particularly prior to long trips. Adjust the tire pressure as necessary (▷ page 245).

Tire tread

⚠ **WARNING**

Although the applicable federal motor vehicle safety laws consider a tire to be worn when the tread wear indicators (TWI) become visible at approximately $^{1}/_{16}$ in (1.6 mm), we recommend that you do not allow your tires to wear down to that level. As tread depth approaches $^{1}/_{8}$ in (3 mm), the adhesion properties on a wet road are sharply reduced. Depending upon the weather and/or road surface (conditions), the tire traction varies widely.

Do not use tires that are excessively worn as the tire traction on wet road surfaces decreases significantly when the tread depth is less than $^{1}/_{8}$ in (3 mm).

Tread wear indicators (TWI) are required by law. Six indicators are positioned over the tire tread. They are visible as soon as a tread depth of approximately $^{1}/_{16}$ in (1.6 mm) is reached. If this is the case, the tire is so worn that it must be replaced.

The recommended tread depth for summer tires is at least $^{1}/_{8}$ in (3 mm). The recommended tread depth for winter tires is at least $^{1}/_{6}$ in (4 mm).

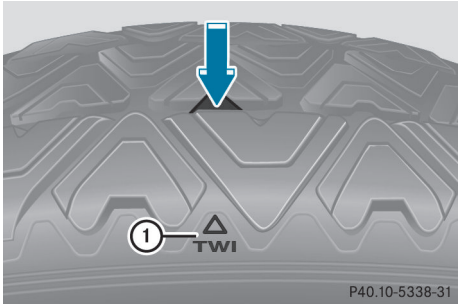

Indicator ① for tread wear is integrated into the tire tread.

Notes on selecting, mounting and replacing tires

- Only mount tires and wheels of the same type and make.
- Only mount tires of the correct size onto the wheels.
- After mounting new tires, run them in at moderate speeds for the first 60 miles

(100 km) as they only reach their full performance after this distance.

- Do not use tires that are excessively worn as the tire traction on wet road surfaces decreases significantly when the tread depth is less than $^{1}/_{8}$ in (3 mm).
- Replace the tires after six years at the latest, regardless of wear. This also applies to the spare wheel.

The service life of tires depends, among other things, on the following factors:

- driving style
- tire pressure
- distance covered

Winter operation

Please bear the following in mind

Have your vehicle winterproofed at a qualified specialist workshop at the onset of winter.

Observe the notes in the "Changing a wheel" section (▷ page 265).

Driving with summer tires

At temperatures below 45 °F (+7 °C), the elasticity of summer tires and therefore also the traction and braking capability are reduced considerably – equip your vehicle with M+S tires. Using summer tires at very cold temperatures could cause tears to form, thereby damaging the tires permanently. Mercedes-Benz cannot accept responsibility for this type of damage.

M+S tires

At temperatures below 45 °F (+7 °C), use winter tires or all-season tires. Both types of tire are identified by the M+S marking.

Not all tires with the M+S marking provide the driving characteristics of winter tires. In addition to the M+S marking, winter tires also bear the snowflake symbol on the sidewall. Tires with this marking fulfill the requirements of the Rubber Manufacturers Association (RMA) and the Rubber Association of Canada (RAC) regarding snow traction, and were specially developed for driving on snow. Only these tires will allow driving safety systems such as ABS and ESP® to function optimally in winter, as these tires have been designed specifically for driving on snow.

ℹ You can obtain information about winter tires that have been approved by Mercedes-Benz especially for your vehicle at any authorized Mercedes-Benz Center.

Use M+S tires of the same make and tread on all wheels to maintain safe handling characteristics.

ℹ For further information about tires, see (▷ page 268).

⚠ **WARNING**

M+S tires with a tread depth of less than $^{1}/_{6}$ inch (4 mm) must be replaced immediately. They are no longer suitable for use in winter.

Always observe the maximum permissible speed specified for the M+S tires you have mounted.

When you have mounted the M+S tires:

▶ Check the tire pressures (▷ page 245).

▶ Restart the tire pressure monitor (▷ page 251).

⚠ **WARNING**

The spare wheel and M+S tires have different tire characteristics. Driving characteristics can be severely impaired when you mount the spare wheel. There is a risk of an accident.

You should therefore adapt your driving style and drive carefully. Have the spare wheel replaced with a new wheel with an M+S tire at the nearest qualified specialist workshop.

Snow chains

For safety reasons, Mercedes-Benz recommends that you only use snow chains that have been specially approved for your vehicle by Mercedes-Benz, or are of a corresponding standard of quality.

! Information about the use of snow chain compatible AMG winter tires is applicable for AMG tires. Use of snow chains is only permissible with these tires.

! There is not enough space for snow chains on some wheel sizes. Observe the information under "Tires and wheels" in the "Technical Data" section to avoid damage to the vehicle or the wheels.

- only use snow chains when driving on roads completely covered by snow. Do not exceed the maximum permissible speed of 30 mph (50 km/h). Remove the snow chains as soon as possible when you are no longer driving on snow-covered roads.
- local regulations may restrict the use of snow chains. Applicable regulations must be observed if you wish to mount snow chains.

If you intend to mount snow chains, please bear the following points in mind:

- you may not attach snow chains to all wheel-tire combinations (▷ page 266).
- mount snow chains only in pairs and only on the rear wheels. Observe the manufacturer's installation instructions.

! If snow chains are mounted on the front wheels, the snow chains could grind against the bodywork or components of the chassis. This could result in damage to the vehicle or the tires.

ℹ You may wish to deactivate ESP®(▷ page 55) when pulling away with snow chains mounted. This way you can allow the wheels to spin in a controlled manner, achieving an increased driving force (cutting action).

Tire pressure

Tire pressure specifications

⚠ **WARNING**

Follow recommended tire inflation pressures.

Do not underinflate tires. Underinflated tires wear excessively and/or unevenly, adversely affect handling and fuel economy, and are more likely to fail from being overheated.

Do not overinflate tires. Overinflated tires can adversely affect handling and ride comfort, wear unevenly, increase stopping distance, and result in sudden deflation (blowout) because they are more likely to become punctured or damaged by road debris, potholes etc.

Do not overload the tires by exceeding the specified load limit as indicated on the Tire and Loading Information placard on the driver's door B-pillar. Overloading the tires can overheat them, possibly causing a blowout. Overloading the tires can also result in handling or steering problems, or brake failure.

You will find a table of recommended tire pressures on the Tire and Loading Information placard on the B-pillar on the driver's side (▷ page 252). You will find a table of tire pressures for various operating conditions on the inside of your vehicle's fuel filler flap.

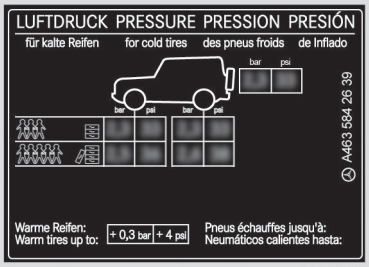

P88.60-2305-31

To test tire pressure, use a suitable tire pressure gauge. The outer appearance of a tire does not permit any reliable conclusion

about the tire pressure. On vehicles equipped with the electronic tire pressure monitoring system, the tire pressure can be checked using the on-board computer.

⚠ WARNING

Should the tire pressure drop repeatedly:

- check the tire for foreign bodies.
- check whether the wheel is losing air or the valve is leaking.
- make sure that only a valve cap approved by Mercedes-Benz is installed on the tire valve.

Tire pressures that are too low have a negative effect on vehicle safety, which could lead you to cause an accident.

Only correct tire pressures when the tires are cold. The tires are cold when the vehicle has been parked for at least three hours or driven for less than 1 mile (1.6 km). The tire temperature changes depending on the outside temperature, the vehicle speed and the tire load. If the tire temperature changes by 18 °F (10 °C), the tire pressure changes by approximately 10 kPa (0.1 bar/1.5 psi). Take this into account when checking the pressure of warm tires and only correct the tire pressure if it is too low for the current operating conditions. If you check the tire pressure when the tires are warm, the resulting value will be higher than if the tires were cold. This is normal. Do not reduce the tire pressure to the value specified for cold tires. The tire pressure would otherwise be too low.

Observe the recommended tire pressure specifications for cold tires on the Tire and Loading Information placard on the B-pillar on the driver's side.

ⓘ The specifications given on the following Tire and Loading Information placard are examples. Tire pressure specifications are vehicle-specific and may deviate from the data shown here. The tire pressures applicable to your vehicle can be found on the Tire and Loading Information placard on your vehicle.

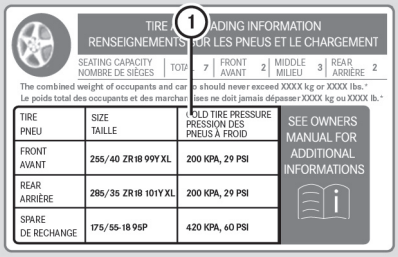

P40.00-2133-31

You will find recommended tire pressure specifications ① for cold tires and for a fully loaded vehicle's Tire and Loading Information placard. The tire pressure information is applicable to all tires mounted at the factory.

Important notes on tire pressure

⚠ WARNING

If the tire pressure drops repeatedly, check the tires for punctures from foreign objects and/or whether air is leaking from the valves or from around the rim.

The tire temperature and pressure increase when the vehicle is in motion. This is dependent on the driving speed and the load.

If you wish to drive at high speeds of 100 mph (160 km/h) or higher when this is allowed, use the tire pressure table on the inside of the fuel filler flap to set the correct tire pressures when the tires are cold. If the tire pressure is not set correctly, this can lead to an excessive build up of heat and a sudden loss of pressure.

For more information, contact a qualified specialist workshop.

ⓘ Driving comfort can be impaired if the tire pressure value recommended in the tire pressure table for speeds over 100 mph (160 km/h) is adopted.

Make sure that the tire pressure for normal speeds is adopted again.

Additional specifications of tire pressure values for loads can also be found on the tire pressure table on the inside of the fuel filler flap.

Observe the following for the tire pressure on the spare wheel:

- the tire and loading information table on the B-pillar on the driver's side.
- the tire pressure sticker on the inside of the fuel filler flap.

ℹ Specifications shown in the examples of tire pressure tables are for illustration purposes only. Tire pressure specifications are vehicle-specific and may deviate from the data shown here. Tire pressure specifications applicable to your vehicle are located in your vehicle's tire pressure table.

Unless stated otherwise, the tire pressures specified on the fuel filler flap apply for all tires approved for this vehicle.

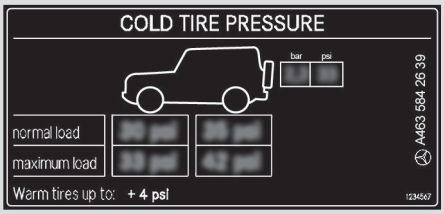

P40.00-2186-31

Tire pressure table for all tires permitted for this vehicle by the factory (example)

If a tire size precedes a tire pressure, the tire pressure information following is only valid for that tire size. The load conditions "partially laden" and "fully laden" are defined in the table for different numbers of passengers and amounts of luggage. The actual number of seats may differ.

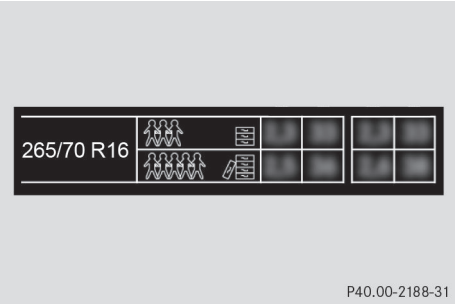

P40.00-2188-31

Tire pressure table with tire dimensions (example)

Some tire pressure tables only show the rim diameter instead of the complete tire size, e.g. **R16**. The rim diameter is part of the tire size and can be found on the tire sidewall (▷ page 259).

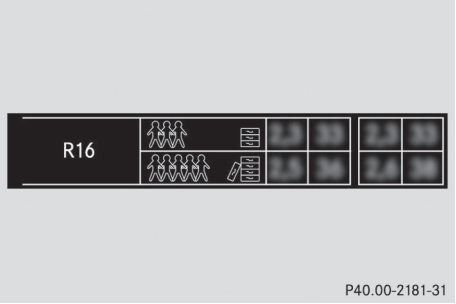

P40.00-2181-31

Underinflated or overinflated tires

Underinflation

⚠ **WARNING**

Follow recommended tire inflation pressures.

Do not underinflate tires. Underinflated tires wear excessively and/or unevenly, adversely affect handling and fuel economy, and are more likely to fail from being overheated.

Underinflated tires may:

- wear quickly and unevenly
- have an adverse effect on fuel consumption
- overheat leading to tire defects
- have an adverse effect on handling characteristics

Overinflation

⚠ **WARNING**

Follow recommended tire inflation pressures.

Do not overinflate tires. Overinflated tires can adversely affect handling and ride comfort, wear unevenly, increase stopping distance, and result in sudden deflation (blowout) because they are more likely to become punctured or damaged by road debris, potholes etc.

Overinflated tires may:

- have an adverse effect on handling characteristics
- wear quickly and unevenly
- be more susceptible to damage
- have an adverse effect on ride comfort
- increase the braking distance

Maximum tire pressure

⚠ **WARNING**

Never exceed the maximum tire inflation pressure. Follow recommended tire inflation pressures.

Do not underinflate tires. Underinflated tires wear excessively and/or unevenly, adversely affect handling and fuel economy, and are more likely to fail from being overheated.

Do not overinflate tires. Overinflated tires can adversely affect handling and ride comfort, wear unevenly, increase stopping distance, and result in sudden deflation (blowout) because they are more likely to become punctured or damaged by road debris, potholes etc.

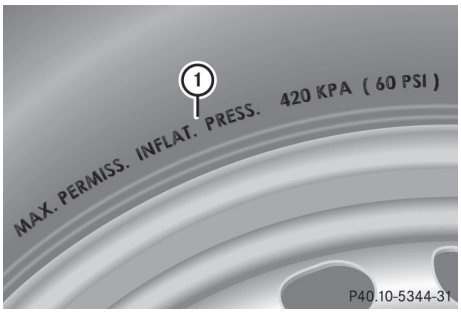

① Maximum permissible tire pressure (example)

ℹ The actual values for tires are vehicle-specific and may deviate from the values in the illustration.

Always observe the recommended tire pressure for your vehicle when adjusting the tire pressure (▷ page 245).

Checking the tire pressures

Important safety notes

⚠ **WARNING**

Follow recommended tire inflation pressures.

Do not underinflate tires. Underinflated tires wear excessively and/or unevenly, adversely affect handling and fuel economy, and are more likely to fail from being overheated.

Do not overinflate tires. Overinflated tires can adversely affect handling and ride comfort, wear unevenly, increase stopping distance, and result in sudden deflation (blowout) because they are more likely to become punctured or damaged by road debris, potholes etc.

Do not overload the tires by exceeding the specified load limit as indicated on the Tire and Loading Information placard on the driver's door B-pillar. Overloading the tires can overheat them, possibly causing a blowout. Overloading the tires can also result in handling or steering problems, or brake failure.

Check the tire pressures at least once a month.

Only check and correct tire pressures when the tires are cold (▷ page 245).

Checking tire pressures manually

To determine and set the correct tire pressure, proceed as follows:

- ▶ Remove the valve cap of the tire that is to be checked.
- ▶ Press the tire pressure gauge securely onto the valve.
- ▶ Read the tire pressure and compare it with the recommended value on the Tire and Loading Information placard on the B-pillar on the driver's side of your vehicle.
- ▶ If necessary, increase the tire pressure to the recommended value (▷ page 245).
- ▶ If the tire pressure is too high, release air by pressing down the metal pin in the valve using the tip of a pen, for example. Then, check the tire pressure again using the tire pressure gauge.
- ▶ Screw the valve cap onto the valve.
- ▶ Repeat these steps for the other tires.

Tire pressure monitor

Important safety notes

If a tire pressure monitor system is installed, the vehicle's wheels have sensors that monitor the tire pressures in all four tires. The tire pressure monitor warns you when the pressure drops in one or more of the tires. The tire pressure monitor only functions if the correct wheel electronics units are installed on all wheels.

The tire pressure monitor has a yellow warning lamp in the instrument cluster for indicating pressure loss/malfunctions (USA) or pressure loss (Canada). Whether the warning lamp flashes or lights up indicates whether a tire pressure is too low or the tire pressure monitoring system is malfunctioning:

- if the warning lamp is lit continuously, the tire pressure on one or more tires is significantly too low. The tire pressure monitor is not malfunctioning.
- USA only: if the warning lamp flashes for 60 seconds and then remains lit constantly, the tire pressure monitor is malfunctioning.

⚠ **WARNING**

The TPMS does not indicate a warning for wrongly selected inflation pressures. Always adjust tire inflation pressure according to the Tire and Loading Information placard or the supplemental tire inflation pressure information on the inside of the fuel filler flap.

The TPMS is not able to issue a warning due to a sudden dramatic loss of pressure (e.g. tire blowout caused by a foreign object). In this case bring the vehicle to a halt by carefully applying the brakes and avoiding abrupt steering maneuvers.

⚠ **WARNING**

Each tire, including the spare (if provided), should be checked at least once a month when cold and inflated to the pressure recommended by the vehicle manufacturer on the Tire and Loading Information placard on the driver's door B-pillar or the tire pressure label on the inside of the fuel filler flap. If your vehicle has tires of a different size than the size indicated on the Tire and Loading Information placard or the tire pressure label, you should determine the proper tire pressure for those tires.

As an added safety feature, your vehicle has been equipped with a tire pressure monitoring system (TPMS) that illuminates a low tire pressure telltale when one or more of your

▷▷

tires are significantly underinflated. Accordingly, when the low tire pressure telltale illuminates, you should stop and check your tires as soon as possible, and inflate them to the proper pressure. Driving on a significantly underinflated tire causes the tire to overheat and can lead to tire failure. Underinflation also reduces fuel efficiency and tire tread life, and may affect the vehicle's handling and stopping ability.

Please note that the TPMS is not a substitute for proper tire maintenance, and it is the driver's responsibility to maintain correct tire pressure, even if underinflation has not reached the level to trigger illumination of the TPMS low tire pressure telltale.

USA only:

Your vehicle has also been equipped with a TPMS malfunction indicator to indicate when the system is not operating properly. The TPMS malfunction indicator is combined with the low tire pressure telltale. When the system detects a malfunction, the telltale will flash for approximately one minute and then remain continuously illuminated. This sequence will be repeated every time the vehicle is started as long as the malfunction exists.

When the malfunction indicator is illuminated, the system may not be able to detect or signal low tire pressure as intended. TPMS malfunctions may occur for a variety of reasons, including the installation of incompatible replacement or alternate tires or wheels on the vehicle that prevent the TPMS from functioning properly. Always check the TPMS malfunction telltale after replacing one or more tires or wheels on your vehicle to ensure that the replacement or alternate tires and wheels allow the TPMS to continue to function properly.

ⓘ USA only:

If the tire pressure monitor is malfunctioning, it may take more than 10 minutes for the tire pressure warning lamp to inform you of the malfunction by flashing for 60 seconds and then remaining lit.

When the malfunction has been rectified, the tire pressure warning lamp goes out after driving for a few minutes.

Information on tire pressures is displayed in the multifunction display. After a few minutes of driving, the current tire pressure of each tire is shown in the multifunction display.

ⓘ The tire pressure values indicated by the on-board computer may differ from those measured at a gas station with a pressure gauge. The tire pressures shown by the on-board computer refer to those measured at sea level. At high altitudes, the tire pressure values indicated by a pressure gauge are higher than those shown by the on-board computer. In this case, do not reduce the tire pressures.

ⓘ The operation of the tire pressure monitor can be affected by interference from radio transmitting equipment (e.g. radio headphones, two-way radios) that may be being operated in or near the vehicle.

ⓘ USA only:

This device complies with Part 15 of the FCC Rules. Operation is subject to the following two conditions:

1. This device may not cause harmful interference, and

2. this device must accept any interference received, including interference that may cause undesired operation.

Any unauthorized modification to this device could void the user’s authority to operate the equipment.

ⓘ Canada only:

This device complies with RSS-210 of Industry Canada. Operation is subject to the following two conditions:

1. This device may not cause interference, and

2. this device must accept any interference received, including interference that may cause undesired operation of the device.

Any unauthorized modification to this device could void the user's authority to operate the equipment.

Checking tire pressure electronically

- Make sure that the SmartKey is in position **2**(▷ page 115) in the ignition lock.
- Press and hold the [ ] or [ ] button on the multifunction steering wheel until the standard display appears in the multifunction display (▷ page 156).
- Press and hold the [ ] or [ ] button until the current tire pressure of each tire is shown in the multifunction display.

If the vehicle has been parked for over 20 minutes, the `Tire pressure displayed only after driving for a few minutes` message appears.

ℹ If a spare wheel is mounted, the system may continue to show the tire pressure of the wheel that has been removed for a few minutes. If this occurs, note that the value displayed for the position where the spare wheel is mounted is not the same as the spare wheel's current tire pressure.

Tire pressure monitor warning messages

If the tire pressure monitor detects a significant pressure loss on one or more tires, a warning message is shown in the multifunction display. A warning tone also sounds and the tire pressure warning lamp lights up in the instrument cluster.

Each tire that is affected by a significant loss of pressure is highlighted by a red rectangle.

ℹ If the wheel positions on the vehicle are interchanged, the tire pressures may be displayed for the wrong positions for a short time. This is rectified after a few minutes of driving, and the tire pressures are displayed for the correct positions.

Restarting the tire pressure monitor

⚠ **WARNING**

It is the driver's responsibility to set the tire pressure to the recommended cold tire pressure. Underinflated tires affect the ability to steer or brake the vehicle. You might lose control over the vehicle.

When you restart the tire pressure monitor, all existing warning messages are deleted and the warning lamps go out. The monitor uses the currently set tire pressures as the reference values for monitoring.

The tire pressure monitor must be restarted when you set the tire pressure to a new value (as a result of changed drive or load characteristics, for example). The tire pressure monitor then monitors the new tire pressure values.

ℹ Canada only: in most cases, the tire pressure monitor recognizes the new reference values automatically. However, you can also define reference values manually as described here.

Restart the tire pressure monitor after you have set the tire pressure to the value recommended for the desired driving situation (▷ page 245). Only correct tire pressures on cold tires. Comply with the recommended tire pressures on the tire and loading information table on the B-pillar on the driver's side. Additional tire pressure values for driving at high speeds or with heavy loads can be found in the tire pressure table on the inside of the fuel filler flap.

- Make sure that the tire pressure is correct on all four wheels.
- Make sure that the SmartKey is in position **2** in the ignition lock.
- Press and hold the [ ] or [ ] button on the multifunction steering wheel until the

standard display appears in the multifunction display (▷ page 156).

▶ Press and hold the [△] or [▽] button until the tire pressure of each wheel or the `Tire pressure displayed only after driving for a few minutes` message appears.

▶ Press the reset button on the instrument cluster (▷ page 25).
The `Restart Tire Pres. Monitor?` message appears in the multifunction display.

If you wish to confirm the restart:

▶ Press the [+] button.
The `Tire Pres. Monitor Restarted` message appears in the multifunction display.

After driving for a few minutes, the system checks whether the current tire pressures are within the specified range. The new tire pressures are then accepted as reference values and monitored.

If you wish to cancel the restart:

▶ Press the [−] button.
The tire pressure values stored at the last restart will continue to be monitored.

Loading the vehicle

Instruction labels for tires and loads

⚠ **WARNING**
Do not overload the tires by exceeding the specified load limit as indicated on the Tire and Loading Information placard on the driver's door B-pillar. Overloading the tires can overheat them, possibly causing a blowout. Overloading the tires can also result in handling or steering problems, or brake failure.

Two instruction labels on your vehicle show the maximum possible load.

(1) The Tire and Loading Information placard on the B-pillar on the driver's side. The Tire and Loading Information placard shows the maximum permissible number of occupants and the maximum permissible vehicle load. It also contains details of the tire sizes and corresponding pressures for tires mounted at the factory.

(2) The vehicle identification plate is on the B-pillar on the driver's side. The vehicle identification plate informs you of the gross vehicle weight rating. It is made up of the vehicle weight, all vehicle occupants, the fuel and the cargo. You can also find information about the maximum gross axle weight rating on the front and rear axle.

The maximum gross axle weight rating is the maximum weight that can be carried by one axle (front or rear axle). Never exceed the maximum load or the maximum gross axle weight rating for the front or rear axle.

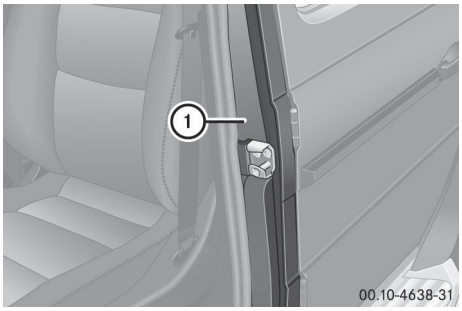

① B-pillar, driver's side

Maximum permissible gross vehicle weight rating

ℹ The specifications shown on the Tire and Loading Information placard in the illustration are examples. The maximum permissible gross vehicle weight rating is

vehicle-specific and may differ from that in the illustration. You can find the valid maximum permissible gross vehicle weight rating for your vehicle on the Tire and Loading Information placard.

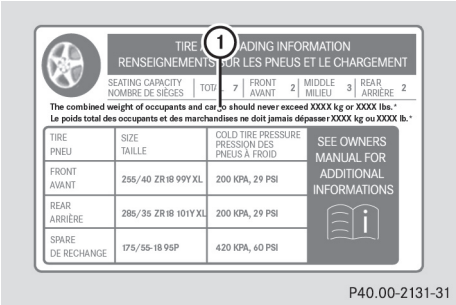

P40.00-2131-31

▶ The Tire and Loading Information placard gives you details on maximum permissible gross vehicle weight rating ①: "The gross weight of occupants and luggage must never exceed XXX kilograms or XXX pounds."

The gross weight of all vehicle occupants, cargo, luggage and trailer load/noseweight (if applicable) must not exceed the specified value.

Number of seats

ℹ The specifications shown on the Tire and Loading Information placard in the illustration are examples. The number of seats is vehicle-specific and can differ from the details shown. The number of seats in your vehicle can be found on the Tire and Loading Information placard.

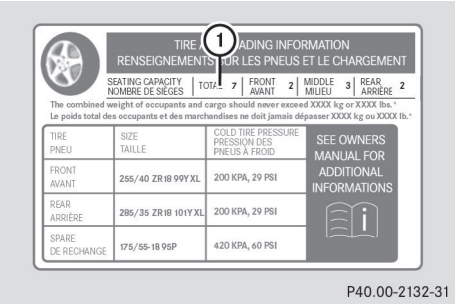

P40.00-2132-31

Maximum number of seats ① determines the maximum number of occupants allowed to travel in the vehicle. This information can be found on the Tire and Loading Information placard.

Determining the correct load limit

Step-by-step instructions

The following steps have been developed as required of all manufacturers under Title 49, Code of U.S. Federal Regulations, Part 575 pursuant to the "National Traffic and Motor Vehicle Safety Act of 1966".

▶ **Step 1:** Locate the statement "The combined weight of occupants and cargo should never exceed XXX kg or XXX lbs." on your vehicle's Tire and Loading Information placard.

▶ **Step 2:** Determine the combined weight of the driver and passengers that will be riding in your vehicle.

▶ **Step 3:** Subtract the combined weight of the driver and passengers from XXX kilograms or XXX lbs.

▶ **Step 4:** The resulting figure equals the available amount of cargo and luggage load capacity. For example, if the "XXX" amount equals 1400 lbs and there will be five 150 lbs passengers in your vehicle, the amount of available cargo and luggage load capacity is 650 lbs (1400 - 750 (5 x 150) = 650 lbs).

- **Step 5:** Determine the combined weight of luggage and cargo being loaded on the vehicle. That weight may not safely exceed the available cargo and luggage load capacity calculated in step 4.
- **Step 6 (if applicable):** If your vehicle will be towing a trailer, load from your trailer will be transferred to your vehicle. Consult this manual to determine how this reduces the available cargo and luggage load capacity of your vehicle (▷ page 256).

Example: step 1 to 3

The following table shows examples on how to calculate total load and cargo capacities with varying seating configurations and number and size of occupants. The following examples use a load limit of 1500 lbs (680 kg). **This is for illustration purposes only.** Make sure you are using the actual load limit for your vehicle stated on the vehicle's Tire and Loading Information placard (▷ page 252).

		Example 1	Example 2	Example 3
Step 1	**Combined maximum weight of occupants and cargo (data from the Tire and Loading Information placard)**	1500 lbs (680 kg)	1500 lbs (680 kg)	1500 lbs (680 kg)

		Example 1	Example 2	Example 3
Step 2	**Number of people in the vehicle (driver and occupants)**	5	3	1
	Distribution of the occupants	Front: 2 Rear: 3	Front: 1 Rear: 2	Front: 1
	Weight of the occupants	Occupant 1: 150 lbs (68 kg) Occupant 2: 180 lbs (82 kg) Occupant 3: 160 lbs (73 kg) Occupant 4: 140 lbs (63 kg) Occupant 5: 120 lbs (54 kg)	Occupant 1: 200 lbs (91 kg) Occupant 2: 190 lbs (86 kg) Occupant 3: 150 lbs (68 kg)	Occupant 1: 150 lbs (68 kg)
	Gross weight of all occupants	750 lbs (340 kg)	540 lbs (245 kg)	150 lbs (68 kg)

		Example 1	Example 2	Example 3
Step 3	**Permissible cargo and trailer load/ noseweight (maximum gross vehicle weight rating from the Tire and Loading Information placard minus the gross weight of all occupants)**	1500 lbs (680 kg) - 750 lbs (340 kg) = 750 lbs (340 kg)	1500 lbs (680 kg) - 540 lbs (245 kg) = 960 lbs (435 kg)	1500 lbs (680 kg) - 150 lbs (68 kg) = 1350 lbs (612 kg)

The higher the weight of all the occupants, the smaller the maximum load for luggage. Further information can be found under "trailer load/noseweight" (▷ page 256).

Vehicle identification plate

Even if you have calculated the total load carefully, you should still make sure that the gross vehicle weight rating and the gross axle weight rating are not exceeded. Details can be found on the vehicle identification plate on the B-pillar on the driver's side of the vehicle (▷ page 252).

Gross vehicle weight: the gross weight of the vehicle, all passengers, cargo and trailer load/noseweight (if applicable) must not exceed the permissible gross vehicle weight.

Gross axle weight rating: the maximum permissible weight that can be carried by one axle (front or rear axle).

To ensure that your vehicle does not exceed the maximum permissible values (gross vehicle weight and maximum gross axle weight rating), have your loaded vehicle (including driver, occupants, cargo, and full trailer load if applicable) weighed on a suitable vehicle weighbridge.

Trailer load/noseweight

The trailer load/noseweight affects the gross weight of the vehicle. If a trailer is attached, the trailer load/noseweight is included in the load along with occupants and luggage. The trailer load/noseweight is usually approximately 10% of the gross weight of the trailer and its load.

Only use a trailer tow hitch that has been approved for your vehicle by Mercedes-Benz. Comply with the manufacturer's operating instructions for operation, care and maintenance.

Maximum load rating

⚠ **WARNING**

Do not overload the tires by exceeding the specified load limit as indicated on the Tire and Loading Information placard on the driver's door B-pillar. Overloading the tires can overheat them, possibly causing a blowout. Overloading the tires can also result in handling or steering problems, or brake failure.

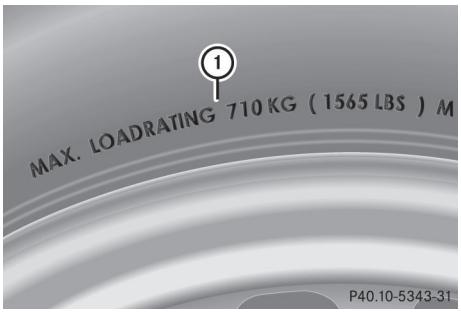

ℹ The actual values for tires are vehicle-specific and may deviate from the values in the illustration.

Maximum tire load ① is the maximum permissible weight for which the tire is approved.

Further information on tire loads (▷ page 258).

Uniform Tire Quality Grading Standards

Overview of Tire Quality Grading Standards

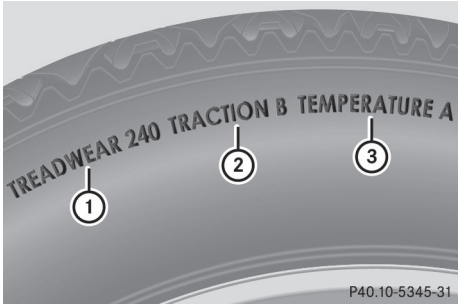

The Uniform Tire Quality Grading Standards are U.S. government specifications. Their purpose is to provide drivers with uniform reliable information on tire performance data. Tire manufacturers have to grade tires using three performance factors: tread wear ①, tire traction ②, and heat resistance ③. All tires sold in North America are provided with the corresponding quality grading markings on the sidewall of the tire, even though these regulations do not apply to Canada.

ℹ The actual values for tires are vehicle-specific and may deviate from the values in the illustration.

Where applicable, the tire grading information can be found on the tire sidewall between the tread shoulder and maximum tire width.

For example:

Tread wear	Traction	Temperature
200	AA	A

All passenger car tires must conform to the statutory safety requirements in addition to these grades.

Tread wear

The tread wear grade is a comparative rating based on the wear rate of the tire when tested under controlled conditions on a specified U.S. government test track. For example, a tire graded 150 would wear one and one-half times as well on the government test track as a tire graded 100.

The relative performance of tires depends upon the actual conditions of their use, however, and may depart significantly from the norm, due to variations in driving habits, service practices and differences in road characteristics and climate conditions.

Traction

⚠ **WARNING**

The traction grade assigned to this tire is based on straight-ahead braking traction tests, and does not include acceleration, cornering, hydroplaning, or peak traction characteristics.

The traction grades, from highest to lowest, are AA, A, B, and C. Those grades represent

the tire's ability to stop on a wet surface as measured under controlled conditions on specified government test surfaces of asphalt and concrete. A tire marked C may have poor traction performance.

⚠ WARNING

If ice has formed on the road, tire traction will be substantially reduced. Under such weather conditions, drive, steer and brake with extreme caution.

The safe speed on a wet, snow covered or icy road is always lower than on dry road surfaces.

You should pay special attention to road conditions when temperatures are around the freezing point.

Mercedes-Benz recommends a minimum tread depth of $^{1}/_{6}$ in (4 mm) for all four winter tires (▷ page 244) to maintain normal driving characteristics in winter. Winter tires can reduce the braking distance on snow covered surfaces in comparison to summer tires. The braking distance is still much further than on surfaces that are not icy or covered with snow. Take appropriate care when driving.

! Avoid wheelspin. This can lead to damage to the drive train.

Temperature

⚠ WARNING

The temperature grade for this tire is established for a tire that is properly inflated and not overloaded. Excessive speed, underinflation, or excessive loading, either separately or in combination, can cause excessive heat build-up and possible tire failure.

The temperature grades are A (the highest), B, and C, These represent the tire's resistance to the generation of heat and its ability to dissipate heat when tested under controlled conditions on a specified indoor laboratory test wheel. Sustained high temperature can cause the material of the tire to degenerate and reduce tire life, and excessive temperature can lead to sudden tire failure. The grade C corresponds to a level of performance which all passenger car tires must meet under the Federal Motor Vehicle Safety Standard No. 109. Grades B and A represent higher levels of performance on the laboratory test wheel than the minimum required by law.

Tire labeling

Tire labeling overview

The following markings are on the tire in addition to the tire name (sales designation) and the manufacturer's name:

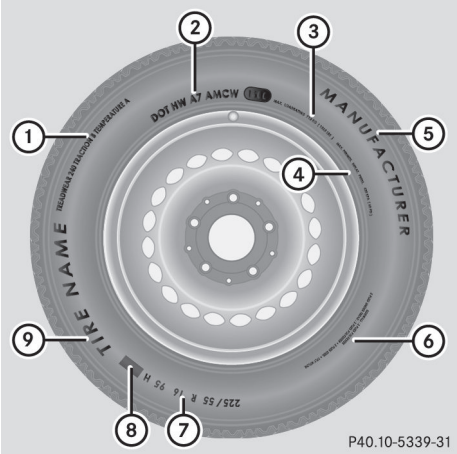

① Uniform tire Quality Grading Standard (▷ page 257)
② DOT, Tire Identification Number (▷ page 261)
③ Maximum tire load (▷ page 256)
④ Maximum tire pressure (▷ page 248)
⑤ Manufacturer
⑥ Tire material (▷ page 262)
⑦ Tire size designation, load-bearing capacity and speed index (▷ page 259)

⑧ Load index (▷ page 261)
⑨ Tire name

ℹ Tire data is vehicle-specific and may deviate from the data in the example.

Tire size designation, load-bearing capacity and speed rating

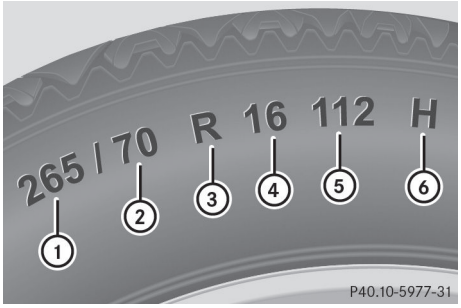

① Tire width
② Nominal aspect ratio in %
③ Tire code
④ Rim diameter
⑤ Load bearing index
⑥ Speed rating

ℹ Tire data is vehicle-specific and may deviate from the data in the example.

General: depending on the manufacturer's standards, the size imprinted in the tire wall may not contain any letters or may contain one letter that precedes the size description.

If there is no letter preceding the size description (as shown above): these are passenger vehicle tires according to European manufacturing standards.

If "P" precedes the size description: these are passenger vehicle tires according to U.S. manufacturing standards.

If "LT" precedes the size description: these are light truck tires according to U.S. manufacturing standards.

If "T" precedes the size description: these are compact emergency spare wheels at high tire pressure, to be used only temporarily in an emergency.

Tire width: tire width ① shows the nominal tire width in millimeters.

Nominal aspect ratio: aspect ratio ② is the ratio between the tire height and tire width and is shown as a percentage. The aspect ratio is calculated by dividing the tire width by the tire height.

Tire code: tire code ③ specifies the tire type. "R" represents radial tires. "D" represents diagonal tires, "B" represents diagonal radial tires.

Optionally, tires with a maximum speed of over 149 mph (240 km/h) may have "ZR" in the size description depending on the manufacturer (e.g. 245/40 ZR 18).

Rim diameter: rim diameter ④ is the diameter of the bead seat, not the diameter of the rim flange. The rim diameter is specified in inches (in).

Load bearing index: load bearing index ⑤ is a numerical code that specifies the maximum load-bearing capacity of a tire.

⚠ **WARNING**

The tire load rating must always be at least half of the GAWR of your vehicle. Otherwise, sudden tire failure may be the result which could cause an accident and/or serious injury to you or others.

Always replace rims and tires with rims and tires having the same specifications (designation, manufacturer and type) as shown on the original part.

⚠ **WARNING**

Do not overload the tires by exceeding the specified load limit as indicated on the Tire and Loading Information placard on the driver's door B-pillar. Overloading the tires can overheat them, possibly causing a blowout. Overloading the tires can also result in handling or steering problems, or brake failure.

Example:

The load bearing index 91 is equivalent to a maximum load of 1356 lbs (615 kg) that the tire can carry. For further information on the maximum tire load in kilograms and pounds, see (▷ page 256).

For further information on the load bearing index, see Load index (▷ page 261).

Speed rating: speed rating ⑥ specifies the approved maximum speed of the tire.

⚠ **WARNING**

Even when permitted by law, never operate a vehicle at speeds greater than the maximum speed rating of the tires.

Exceeding the maximum speed for which tires are rated can lead to sudden tire failure, causing loss of vehicle control and possibly resulting in an accident and/or serious personal injury and possible death, for you and for others.

Regardless of the speed rating always observe the speed limits. Drive carefully and adapt your driving style to the traffic conditions.

Summer tires	
Index	**Speed rating**
Q	Up to 100 mph (160 km/h)
R	Up to 106 mph (170 km/h)
S	Up to 112 mph (180 km/h)
T	Up to 118 mph (190 km/h)
H	Up to 130 mph (210 km/h)
V	Up to 149 mph (240 km/h)
W	Up to 168 mph (270 km/h)
Y	Up to 186 mph (300 km/h)
ZR...Y	Up to 186 mph (300 km/h)

Summer tires	
Index	**Speed rating**
ZR...(..Y)	Above 186 mph (300 km/h)
ZR	Above 149 mph (240 km/h)

- Optionally, tires with a maximum speed of over 149 mph (240 km/h) may have "ZR" in the size description depending on the manufacturer (e.g. 245/40 ZR 18).

  The service specification is made up of load bearing index ⑤ and speed rating ⑥.
- If the size description of your tire includes "ZR" and there are no service specifications, ask the tire manufacturer in order to find out the maximum speed.

  If a service specification is available, the maximum speed is limited according to the speed rating in the service specification. Example: 245/40 ZR 18 97 Y. In this example, "97 Y" is the service specification. The letter "Y" represents the speed rating and the maximum speed of the tire is limited to 186 mph (300 km/h).
- Every tire that has a maximum speed above 186 mph (300 km/h) must have "ZR" in the size description **and** the service specification must be given in brackets. Example: 275/40 ZR 18 (99 Y). The speed rating "(Y)" shows that the maximum speed of the tire is above 186 mph (300 km/h). Ask the tire manufacturer to find out the maximum speed.

All-weather tires and winter tires	
Index	**Speed rating**
Q M+S[18]	Up to 100 mph (160 km/h)
T M+S[18]	Up to 118 mph (190 km/h)
H M+S[18]	Up to 130 mph (210 km/h)
V M+S[18]	Up to 149 mph (240 km/h)

[18] Or M+S ❄ for winter tires.

ℹ Not all tires that have the M+S identification offer the driving characteristics of winter tires. In addition to the M+S marking, winter tires also have the snowflake symbol on the tire wall. Tires with this identification fulfill the requirements of the Rubber Manufacturers Association (RMA) and the Rubber Association of Canada (RAC) regarding the tire traction on snow and have been especially developed for driving on snow.

An electronic speed limiter prevents your vehicle from exceeding a speed of 130 mph (210 km/h).

The speed rating of tires mounted at the factory may be higher than the maximum speed that the electronic speed limiter permits.

Make sure that your tires have the required speed rating as specified in the "tires" section (▷ page 268), e.g. if you buy new tires.

Further information about reading tire data can be obtained from any qualified specialist workshop.

Load index

ℹ Tire data is vehicle-specific and may deviate from the data in the example.

In addition to the load bearing index, load index ① may be imprinted after the letters that identify speed index ⑥(▷ page 259) on the sidewall of the tire.

- If no specification is given: no text (as in the example above), represents a standard load (SL) tire
- XL or Extra Load: represents a reinforced tire
- Light Load: represents a light load tire
- C, D, E: represents a load range that depends on the maximum load that the tire can carry at a certain pressure

DOT, Tire Identification Number (TIN)

U.S. tire regulations prescribe that every manufacturer of new tires or retreader has to imprint a TIN in or on the sidewall of each tire produced.

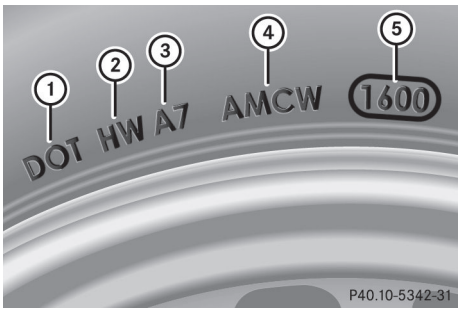

The TIN is a unique identification number. The TIN enables the tire manufacturers to inform purchasers of recalls and other safety-relevant matters. It makes it possible for the purchaser to easily identify the affected tires.

The TIN is made up of manufacturer identification code ②, tire size ③, tire type code ④ and manufacturing date ⑤.

ℹ Tire data is vehicle-specific and may deviate from the data in the example.

DOT (Department of Transportation): tire symbol ① marks that the tire complies with the requirements of the U.S. Department of Transportation.

Manufacturer identification code: manufacturer identification code ② provides details on the tire manufacturer. New tires

have a code with two symbols. Retreaded tires have a code with four symbols.

Further information about retreaded tires (▷ page 242).

Tire size: identifier ③ describes the tire size.

Tire type code: tire type code ④ can be used by the manufacturer as a code to describe specific characteristics of the tire.

Date of manufacture: date of manufacture ⑤ provides information about the age of a tire. The first and second positions represent the week of manufacture, starting with "01" for the first calendar week. Positions three and four represent the year of manufacture. For example, a tire that is marked with "3208", was manufactured in week 32 in 2008.

Tire characteristics

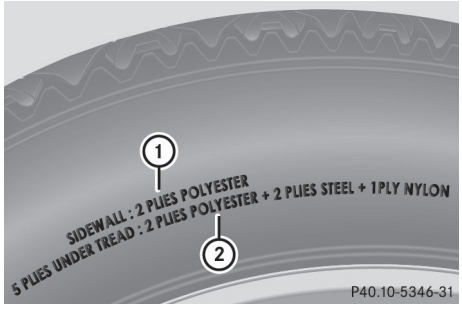

ℹ Tire data is vehicle-specific and may deviate from the data in the example.

This information describes the type of tire cord and the number of layers in sidewall ① and under tire tread ②.

Definition of terms for tires and loading

Tire structure and characteristics

Describes the number of layers or the number of rubber-coated belts in the tread and the sidewall of the tire. These are made of steel, nylon, polyester and other materials.

Bar

Metric unit for tire pressure.
14.5038 pounds per square inch (psi) and 100 kilopascals (kPa) are the equivalent of 1 bar.

DOT (Department of Transportation)

DOT marked tires fulfill the requirements of the United States Department of Transportation.

Average weight of the vehicle occupants

The number of occupants for which the vehicle is designed multiplied by 68 kilograms (150 lb).

Uniform Tire Quality Grading Standards

A uniform standard to grade the quality of tires with regards to tread quality, tire traction and temperature characteristics. The quality grading assessment is made by the manufacturer following specifications from the U.S. government. The quality grade of a tire is imprinted on the sidewall of the tire.

Recommended tire pressure

The recommended tire pressure for your vehicle under normal driving conditions. You will find the recommendation on the Tire and Loading Information placard on the B-pillar on the driver's side of your vehicle. The recommended tire pressure provides the best balance between handling characteristics, ride comfort and wear. Additional information on particular driving conditions is located on the tire pressure table on the inside of the fuel filler flap.

Increased vehicle weight due to optional equipment

This is the combined weight of all standard and optional equipment available for the vehicle, regardless of whether it is actually installed on the vehicle or not.

Wheel rim

This is the part of the wheel on which the tire is mounted.

GAWR (Gross Axle Weight Rating)

The GAWR is the maximum gross axle weight rating. The actual load on an axle must never exceed the gross axle weight rating. The gross axle weight rating can be found on the vehicle identification plate on the B-pillar on the driver's side.

Speed index

The speed index is part of the tire identification. It specifies the speed range for which the tire is approved.

GTW (Gross Trailer Weight)

The GTW is the sum of the weight of a trailer and the weight of the load, luggage, accessories etc. on the trailer.

GVW (Gross Vehicle Weight)

The gross vehicle weight includes the weight of the vehicle including fuel, tools, the spare wheel, accessories installed, occupants, luggage and the drawbar noseweight if applicable. The gross vehicle weight must not exceed the gross vehicle weight rating GVWR as specified on the vehicle identification plate on the B-pillar on the driver's side.

GVWR (Gross Vehicle Weight Rating)

The GVWR is the maximum permitted gross weight of the fully laden vehicle (weight of the vehicle including all accessories, occupants, fuel, luggage and the drawbar noseweight if applicable). The gross vehicle weight rating is specified on the vehicle identification plate on the B-pillar on the driver's side.

Maximum weight of the laden vehicle

The maximum weight is the sum of the curb weight of the vehicle, the weight of the accessories, the maximum load and the weight of the optional equipment installed at the factory.

Kilopascal (kPa)

Metric unit for tire pressure. 6.9 kPa is the equivalent of 1 psi. Another unit for tire pressure is bar. 100 kilopascal (kPa) is the equivalent of 1 bar.

Load index

In addition to the load bearing index, the load index may also be imprinted on the sidewall of the tire. This specifies the load bearing capacity more precisely.

Curb weight

The weight of a vehicle with standard equipment, including the maximum capacity of fuel, oil and coolant and also includes the air-conditioning system and optional equipment if these are installed on the vehicle, but does not include passengers or luggage.

Maximum tire load

The maximum tire load is the maximum permissible weight in kilograms or lbs for which a tire is approved.

Maximum permissible tire pressure

Maximum permissible tire pressure for one tire.

Maximum load on one tire

Maximum load on one tire. This is calculated by dividing the maximum axle load of one axle by two.

PSI (pounds per square inch)

Standard unit of measurement for tire pressure.

Aspect ratio

Relationship between tire height and tire width in percent.

Tire pressure

This is pressure inside the tire applying an outward force to every square inch of the tire's surface. The tire pressure is specified in pounds per square inch (psi), in kilopascal (kPa) or in bar. The tire pressure should only be corrected when the tires are cold. For this, the vehicle must have been stationary for at least 3 hours or not have traveled more than 1.6 km (1 mile) in this time.

Tire tread

The part of the tire that comes into contact with the road.

Tire bead

The tire bead ensures that the tire sits securely on the wheel. There are several steel wires in the bead to prevent the tire from coming loose from the wheel rim.

Sidewall

The part of the tire between the tread and the tire bead.

Weight of optional extras

The combined weight of those optional extras that weigh more than the replaced standard part and more than 2.3 kg (5 lbs). These optional extras, such as high-performance brakes, level control, a roof rack or a high-performance battery, are not included in the curb weight and the weight of the accessories.

TIN (Tire Identification Number)

This is a unique identification number which can be used by a tire manufacturer to identify tires, for example for a product recall, and thus identify the purchasers. The TIN is made up of the manufacturer's identity code, tire size, tire type code and the manufacturing date.

Load bearing index

The load bearing index (also load index) is a code that contains the maximum load bearing capacity of a tire.

Traction

Traction is the result of friction between the tires and the road surface.

TWR (permissible trailer drawbar noseweight)

The TWR is the maximum permissible weight that may act on the ball coupling of the trailer tow hitch.

Wear indicator

Narrow bars (tread wear bars) that are distributed over the tire tread. If the tire tread is level with the bars, the wear limit of $^{1}/_{16}$ in (1.6 mm) has been reached.

Distribution of the vehicle occupants

Distribution of vehicle occupants over designated seat positions in a vehicle.

Maximum permissible payload weight

Nominal load and luggage load plus 68 kilograms (150 lb) multiplied by the number of seats in the vehicle.

Changing a wheel

Flat tire

The "Roadside Assistance" section (▷ page 226) contains information and notes on how to deal with a flat tire. It also provides instructions on changing a wheel or mounting the spare wheel.

Interchanging the wheels

⚠ **WARNING**

Rotate front and rear wheels only if the tires are of the same dimension.

If your vehicle is equipped with mixed-size tires (different tire dimensions front vs. rear), tire rotation is not possible.

⚠ **WARNING**

Have the tightening torque checked after changing a wheel. Wheels could become loose if not tightened with a torque of 96 lb-ft (130 Nm).

Only use genuine Mercedes-Benz wheel bolts specified for your vehicle's rims.

The wear patterns on the front and rear tires differ, depending on the operating conditions. Rotate the wheels before a clear wear pattern has formed on the tires. Front tires typically wear more on the shoulders and the rear tires in the center.

If your vehicle's tire configuration allows, you can rotate the wheels according to the intervals in the tire manufacturer's warranty book in your vehicle documents. If this is not available, the tires should then be replaced every 3000 to 6000 miles (5000 to 10,000 km), or earlier if the tire wear requires this. Do not change the direction of wheel rotation.

Clean the contact surfaces of the wheel and the brake disc thoroughly every time a wheel is interchanged. Check the tire pressure and reactivate the tire pressure monitor (▷ page 249) if necessary.

Information on changing a wheel and mounting the spare wheel (▷ page 226).

! On vehicles equipped with a tire pressure monitor, electronic components are located in the wheel.

Tire-mounting tools should not be used near the valve. This could damage the electronic components.

Only have tires changed at a qualified specialist workshop.

Direction of rotation

Tires with a specified direction of rotation have additional benefits, e.g. if there is a risk of hydroplaning. You will only gain these

benefits if the correct direction of rotation is maintained.

An arrow on the sidewall of the tire indicates its correct direction of rotation.

You may mount the spare wheel against the direction of rotation. Adhere to the time restriction on use as well as the speed limitation specified on the spare wheel.

Storing wheels

Store tires that are not being used in a cool, dry and preferably dark place. Protect the tires from oil, grease, gasoline and diesel.

Cleaning the wheels

⚠ **WARNING**

Do not use power washers with circular jet nozzles (concentrated-power jets) to clean your vehicle, especially for cleaning tires. You could otherwise damage the tires and cause an accident.

Wheel and tire combinations

Please bear the following in mind

⚠ **WARNING**

Replace rims or tires with the same designation, manufacturer and type as shown on the original part. For further information contact an authorized Mercedes-Benz Center. If incorrectly sized rims and tires are mounted, the wheel brakes or suspension components can be damaged. Also, the operating clearance of the wheels and the tires may no longer be correct.

⚠ **WARNING**

Worn, old tires can cause accidents. If the tire tread is worn to minimum tread depth, or if the tires have sustained damage, replace them.

When replacing rims, only use genuine Mercedes-Benz wheel bolts specified for the particular rim type. Failure to do so can result in the bolts loosening and possibly an accident.

Retreaded tires are not tested or recommended by Mercedes-Benz, since previous damage cannot always be recognized on retreads. The operating safety of the vehicle cannot be assured when such tires are used.

⚠ **WARNING**

If you notice sudden significant vibrations or unusual handling performance or if you suspect that damage has occurred to the vehicle, you should activate the hazard warning lamps, gently reduce speed and carefully head for an area that is located at a safe distance from the road.

Check the tires and the underside of the vehicle for damage. If the vehicle seems unsafe, have the vehicle towed away to the nearest Mercedes-Benz Center or tire dealer to be repaired.

⚠ **WARNING**

Do not drive with a flat tire. A flat tire affects the ability to steer or brake the vehicle. You might lose control of the vehicle. Continued driving with a flat tire or driving at high speed with a flat tire will cause excessive heat build-up and possibly a fire.

! For safety reasons, Mercedes-Benz recommends that you only use tires, wheels and accessories which have been approved by Mercedes-Benz specifically for your vehicle. These tires have been specially adapted for use with the driving safety systems, such as ABS or ESP®.

Only use tires, wheels or accessories tested and approved by Mercedes-Benz. Certain characteristics, e.g. handling, vehicle noise emissions or fuel consumption, may otherwise be adversely affected. In addition, when driving with a

load, tire dimension variations could cause the tires to come into contact with the bodywork and axle components. This could result in damage to the tires or the vehicle.

Mercedes-Benz accepts no liability for damage resulting from the use of tires, wheels or accessories other than those tested and approved.

Further information about wheels, tires and approved combinations can be obtained from any authorized Mercedes-Benz Center.

ℹ The Tire and Load Information placard with the recommended tire pressures is attached to the B-pillar on the driver's side. Further information about driving at high speeds or driving with vehicle loads that are lighter than the maximum vehicle load can be found in the tire pressure table on the inside of the fuel filler flap. Check tire pressures regularly, and only when the tires are cold. Comply with the maintenance recommendations of the tire manufacturer in the vehicle document wallet.

For further information on the recommended tire inflation pressure and on tire pressures for specific driving conditions, see (▷ page 245).

ℹ Notes on vehicle tires:

Always:

- mount tires of the same size on a given axle (left/right)
- mount tires of the same type on your vehicle at a given time (summer tires, winter tires, all-weather tires, all-terrain tires)

ℹ The following pages contain information on approved wheels and tire sizes for equipping your vehicle with winter tires. Winter tires are not available ex factory as standard equipment or optional extras.

If you wish to mount approved winter tires on your vehicle, wheels of appropriate size may also be required as the sizes of the approved winter tires may differ from those of the original tires. This is dependent on the model and the equipment installed at the factory.

The wheels and tires as well as further information can be obtained at a qualified specialist workshop.

The tire and wheel combinations listed in the tables below apply to the following models:

V1	G 550
V2	G 55 AMG

Tires			
All-weather tires[19]	**Alloy wheels**	**V1**	**V2**
265/60 R18 109HM+S	7.5J x 18 H2 ET 63 Wheel offset: 1.69 in (43 mm)	–	•
265/60 R18 110 VM+S	7.5 J x 18 H2 Wheel offset: 1.69 in (43 mm)	•	–
275/55 R19 111 VM+S[20]	9.5 J x 19 H2 Wheel offset: 1.97 in (50 mm)	–	•

Spare wheel			
All-weather tires[19]	**Alloy wheels**	**V1**	**V2**
265/60 R18 110 VM+S	7.5J x 18 H2 Wheel offset: 1.69 in (43 mm)	•	•

ℹ You can obtain information about tires and tire dimensions that are not listed here at any authorized Mercedes-Benz Center.

[19] Radial tires.
[20] Use of snow chains is not permitted.

Useful information 270
Genuine Mercedes-Benz parts 270
Warranty 270
Identification plates 271
Service products and capacities 272
Vehicle data 277

Useful information

ℹ This Operator's Manual describes all models and all standard and optional equipment of your vehicle available at the time of publication of the Operator's Manual. Country-specific differences are possible. Please note that your vehicle may not be equipped with all features described. This also applies to safety-related systems and functions.

ℹ Please read the information on qualified specialist workshops (▷ page 20).

Genuine Mercedes-Benz parts

All Mercedes-Benz Centers maintain a supply of genuine Mercedes-Benz parts for necessary service and repair work. In addition, strategically located parts delivery centers provide quick and reliable parts service.

More than 300,000 different genuine Mercedes-Benz parts are available for Mercedes-Benz models.

Genuine Mercedes-Benz parts are subject to strict quality control. Each part has been specially developed, manufactured or selected for Mercedes-Benz vehicles and fine-tuned for them.

Only genuine Mercedes-Benz parts should therefore be used.

! The use of non-approved parts could impair the vehicle's safety. For this reason, Mercedes-Benz recommends genuine Mercedes-Benz parts and approved conversion parts and accessories for your vehicle model.

Environmental note

Daimler AG also supplies reconditioned major assemblies and parts which are of the same quality as new parts. They are covered by the same Limited Warranty entitlements as new parts.

Always specify the vehicle identification number (VIN) (▷ page 271) and the engine number (▷ page 272) when ordering genuine Mercedes-Benz parts.

Warranty

The Service and Warranty Information booklet contains detailed information about the warranties covering your vehicle.

Your authorized Mercedes-Benz Center will exchange or repair any defective parts originally installed in the vehicle in accordance with the terms of the following warranties:

- New Vehicle Limited Warranty
- Emission System Warranty
- Emission Performance Warranty
- California, Connecticut, Maine, Massachusetts, New York, Pennsylvania, Rhode Island and Vermont Emission Control System Warranty
- State warranty enforcement laws (Lemon Laws)

Replacement parts and accessories are covered by the Mercedes-Benz Parts and Accessories warranties. You can obtain information about this from any authorized Mercedes-Benz Center.

ℹ Should you lose your Service and Warranty Information booklet, have an authorized Mercedes-Benz Center arrange for a replacement. It will be mailed to you.

Identification plates

Vehicle identification plate with vehicle identification number (VIN) and paint code number

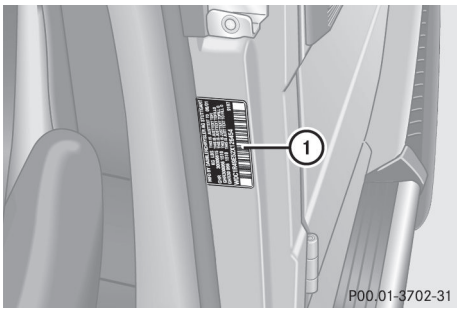

▶ Open the front left-hand door.
You will see vehicle identification plate ①.

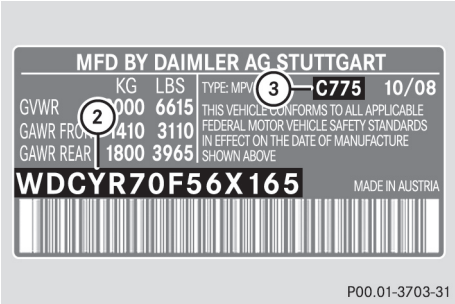

Vehicle identification plate (example, USA only)

② VIN

③ Paint code

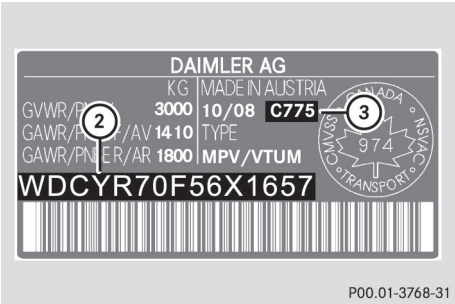

Vehicle identification plate (example, Canada only)

② VIN

③ Paint code

ⓘ The data shown on the vehicle identification plate is used only as an example. This data is different for every vehicle and can deviate from the data shown here. The correct data for your vehicle can be found on the vehicle identification plate that is mounted on your vehicle.

Vehicle identification number (VIN)

The vehicle identification number (VIN) can be found in the following locations:

- on the vehicle identification plate (▷ page 271)
- stamped into the chassis on the right-hand side (when viewed in the direction of travel)
- on the lower edge of the windshield

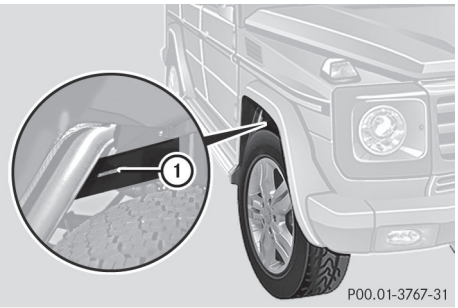

① VIN (stamped into the chassis on the right-hand side, when viewed in the direction of travel)

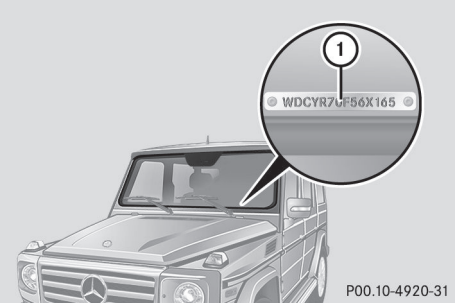

① VIN (on the lower edge of the windshield)

Engine number

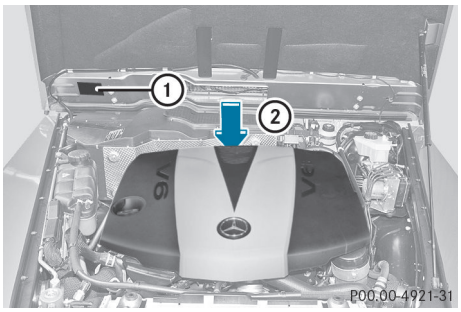

Example: G 550

① Emissions control information plate, including the certification of both federal and Californian emissions standards

② Engine number (stamped into the crankcase)

Service products and capacities

Important safety notes

Service products include the following:

- fuels
- lubricants (e.g. engine oil, transmission oil)
- coolant
- brake fluid
- windshield washer fluid

Vehicle components and their respective lubricants must match. You should therefore only use products that have been tested and approved by Mercedes-Benz.

Information on tested and approved products can be obtained at an authorized Mercedes-Benz Center or on the Internet at **http://bevo.mercedes-benz.com**.

⚠ **WARNING**

Comply with all valid regulations with respect to handling, storing and disposing of service fluids. Otherwise, you could endanger persons or the environment.

Keep service fluids out of the reach of children.

For health reasons, you should prevent service fluids from coming into direct contact with your skin or clothing.

If a service fluid is swallowed, contact a physician immediately.

Capacities

	Vehicle model	Capacity	Fuel, coolant, lubricants, etc.
Engine oil and filter	G 550	9.5 US qt (9.0 l)	Approved engine oils
	G 55 AMG	9.0 US qt (8.5 l)	
Power steering	All models	Approx. 1.06 US qt (1.0 l)	MB power steering fluid or approved Dexron III ATF
Cooling system	G 550	Approx. 12.8 US qt (12.1 l)	MB 325.0 corrosion inhibitor/antifreeze agent
	G 55 AMG	Approx. 13.4 US qt (12.7 l)	
Tank capacity	G 550	25.4 US gal (96.0 l)	Unleaded gasoline (at least 91 octane; average value of 96 RON/86 MON)
	G 55 AMG	25.1 US gal (95.0 l)	
Reserve	All models	Approx. 5.3 US gal (20.0 l)	
Automatic climate control	All models	–	Refrigerant R134a and special PAG lubricant (never R12)
Windshield/ headlamp cleaning system	All models	7.4 US qt (7.0 l)	MB windshield washer concentrate[21] (▷ page 277) Mixing ratio for washer fluid (▷ page 277)

Fuel

Important safety notes

⚠ **WARNING**

Gasoline is highly flammable and poisonous. It burns violently and can cause serious personal injury.

Never allow sparks, flames or smoking materials near gasoline.

Turn off the engine before refueling.

Whenever you are around gasoline, avoid inhaling fumes and any skin or clothing contact.

Direct skin contact with fuels and the inhalation of fuel vapors are damaging to your health.

Premium-grade unleaded gasoline

! To ensure the longevity and full performance of the engine, only premium-grade unleaded gasoline may be used.

[21] Mixed with water or premixed washer fluid with antifreeze protection.

If there is no premium-grade unleaded gasoline available and regular-grade unleaded gasoline may be used; please observe the following precautions:

- only fill the fuel tank to half full with regular-grade unleaded gasoline and fill the rest with premium-grade unleaded gasoline as soon as possible.
- do not drive at the maximum speed.
- avoid sudden acceleration.
- if the vehicle is carrying a light load, e.g. two passengers without luggage, do not allow the engine to rev above 3,000 rpm.
- if the vehicle is fully loaded or is being operated in mountainous terrain, do not depress the accelerator pedal further than ⅔ of the pedal travel.

Fuel requirements

Use only premium-grade unleaded gasoline. The octane number should be at least 91. Details can be found on the gas pump. The octane number is the average value of the Research Octane Number (RON) and the Motor Octane Number (MON): (RON + MON) / 2, also known as knock resistance.

Reformulated Gasoline (RFG) and/or unleaded gasoline with additives can be used if the concentration of the additives in the fuel does not exceed 10%, e.g.:

- Ethanol
- TAME
- ETBE
- IPA
- TBA

For MTBE, the concentration should not exceed 15%.

The concentration of methanol in gasoline including other additives must not exceed 3%.

Using mixtures of methanol and ethanol is not permitted. Gasohol, a mixture of 10% ethanol and 90% unleaded gasoline, can be used.

All of these mix fuels must fulfill the fuel requirements, e.g.:

- knock resistance
- boiling point
- vapor pressure

Additives in gasoline

One of the major problems in engine design is the creation of carbon deposits during the process of burning fuel. Mercedes-Benz recommends that you use fuel brands containing additives that prevent the build-up of carbon deposits.

If you use fuels without these additives for an extended period of time, there may be a build up of carbon deposits, especially on the inlet valves and in the combustion chamber.

This could lead to engine problems, e.g.:

- longer engine warm-up phase
- uneven idle
- engine noise
- misfiring
- loss of power

In areas where carbon deposits can build up, because of the lack of availability of gasoline with the corresponding additives, Mercedes-Benz recommends the use of additives that have been approved for Mercedes-Benz vehicles.

Consult an authorized Mercedes-Benz Center or go to the Internet site **http://bevo.mercedes-benz.com** for a list of approved products. Comply with the instructions for use on the product label.

Do not mix other fuel additives with fuel. This causes unnecessary costs and could damage the engine.

! Do not refuel with low-grade fuel and do not use fuel additives that are not tested and approved for Mercedes-Benz vehicles. Damage to or malfunctions of the fuel system may otherwise occur.

Engine oil

Please bear the following in mind

The engine oils are matched to the performance of Mercedes-Benz engines and service intervals. For this reason, only use engine oils and oil filters that are approved for vehicles with a service system.

For a list of approved engine oils and oil filters, consult an authorized Mercedes-Benz Center or go to the Internet site **http://bevo.mercedes-benz.com** (USA only).

! Never use engine oil or an oil filter of a specification other than is necessary to fulfill the prescribed service intervals. Do not change the engine oil or oil filter in order to achieve longer replacement intervals than those prescribed. You could otherwise cause engine damage or damage to the exhaust gas aftertreatment.

Follow the instructions in the service interval display regarding the oil change. Otherwise, you may damage the engine and the exhaust gas aftertreatment.

The table shows which engine oils have been approved for your vehicle.

Model	Engine model	MB Approval
G 550	273	229.5
G 55 AMG	113	229.5

ⓘ MB approval is indicated on the oil containers.

Additives

! Do not use any additives in the engine oil. This could damage the engine.

Engine oil viscosity

Viscosity describes the flow characteristics of a fluid. If an engine oil has a high viscosity, this means that it is thick; a low viscosity means that it is thin.

Select an engine oil with an SAE (viscosity) classification suitable for the prevailing outside temperatures. The following table shows the correct SAE classification to be used. The low-temperature characteristics of engine oils can deteriorate significantly, e.g. as a result of aging, soot and fuel deposits. It is therefore strongly recommended that you carry out regular oil changes using an approved engine oil with the appropriate SAE classification.

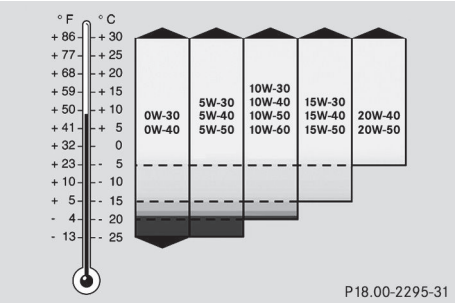

Refrigerant of the air-conditioning system

The air-conditioning system is filled with R134a (HFC) refrigerant and a special PAG lubricant.

! Never use refrigerant R 12 (CFC) or mineral lubricants. Otherwise, you could damage the air-conditioning system.

Brake fluid

⚠ **WARNING**

The brake fluid constantly absorbs moisture from the air; this lowers its boiling point.

If the boiling point of the brake fluid is too low, vapor pockets may form in the brake system when the brakes are applied hard (e.g. when driving downhill). This would impair braking efficiency.

▷▷

You should have the brake fluid renewed at regular intervals. The brake fluid change intervals can be found in the Maintenance Booklet.

Only use brake fluid approved by Mercedes-Benz. Information about approved brake fluids can be obtained from any authorized Mercedes-Benz Center.

Coolant

Important safety notes

The coolant is a mixture of water and antifreeze/corrosion inhibitor. It performs the following tasks:

- anti-corrosion protection
- antifreeze protection
- raising the boiling point

The engine cooling system is filled at the factory with coolant which contains an antifreeze/corrosion inhibitor that ensures protection down to approximately -35 °F (-37 °C).

! Only add coolant that has been premixed with the desired antifreeze protection. Otherwise, the engine could be damaged.

Further information on coolants and on filling can be found in the Mercedes-Benz Specifications for Service Products, MB Approval 310.1, e.g. on the Internet at http://bevo.mercedes-benz.com. You can also consult an authorized Mercedes-Benz Center.

! Always use a suitable coolant mixture, even in countries where high temperatures prevail.

Otherwise, the engine cooling system is not sufficiently protected from corrosion and the boiling point will be too low.

If the coolant has antifreeze protection down to -35 °F (-37 °C), the boiling point of the coolant in the pressurized system is approximately 266 °F (130 °C).

Your vehicle has a range of aluminum components. Aluminum components in the engine make it necessary to use anticorrosion/antifreeze coolant which has been specifically formulated to protect the aluminum parts. Using other antifreeze/corrosion inhibitors without these characteristics affects the service life.

The coolant must be used throughout the year in order to maintain the necessary corrosion protection and provide protection from overheating. In the Maintenance Booklet, you can find information on the intervals for renewal.

The renewal interval is determined by the coolant type and the engine cooling system design. The renewal interval in the Maintenance Booklet is only valid if the coolant is renewed or replenished with Mercedes-Benz approved products. Therefore, only use MB 326.0 antifreeze/corrosion inhibitor or another Mercedes-Benz approved product of the same specification.

Information on other products with the same specifications that are approved by Mercedes-Benz can be obtained at an authorized Mercedes-Benz Center or on the Internet at **http://bevo.mercedes-benz.com**.

The coolant is checked at every maintenance interval at an authorized Mercedes-Benz Center.

The antifreeze/corrosion inhibitor concentration in the engine cooling system should:

- be at least 50%. This will protect the engine cooling system against freezing down to approximately -35 °F (-37 °C).
- not exceed 55% (antifreeze protection to -49 °F [-45 °C]); otherwise, heat will not dissipate as effectively.

If the coolant level is too low, MB 325.0 antifreeze/corrosion inhibitor should be added. Have the engine cooling system checked for possible leaks.

Cooling system		
Vehicle model	Antifreeze protection	
	Approx. -35 °F (-37 °C)	Approx. -49 °F (-45 °C)
G 550	6.4 US qt (6.05 l)	7.1 US qt (6.7 l)
G 55 AMG	6.7 US qt (6.35 l)	7.4 US qt (7.0 l)

Windshield/headlamp cleaning system

⚠ **WARNING**

Washer solvent/antifreeze is highly flammable. Do not spill washer solvent/antifreeze on hot engine parts, because it may ignite and burn. You could be seriously burned.

- Use windshield washer concentrate MB SummerFit.
- **At temperatures above freezing:** add 1 part MB SummerFit to 100 parts water, e.g. 1.34 fl oz (40 ml) MB SummerFit to 1 gal (4.0 l) of water.
- **At temperatures below freezing:** add 1 part MB SummerFit to 100 parts washer fluid, e.g. 1.34 fl oz (40 ml) MB SummerFit to 1 gal (4.0 l) of water.

Vehicle data

Vehicle data, G 550 (463.237)

The data stated here refers specifically to a vehicle with standard equipment. Consult an authorized Mercedes-Benz Center for the data for all vehicle variants and trim levels.

Vehicle dimensions, G 550	
Vehicle length[22]	183.9 in (4672 mm)
Vehicle width including exterior mirrors	79.0 in (2007 mm)
Vehicle height	76.8 in (1951 mm)
Wheelbase	112.2 in (2850 mm)
Track width	59.7 in (1515 mm)
Ground clearance, front	9.1 in (232 mm)
Ground clearance, rear	8.8 in (223 mm)
Turning circle	44.6 ft (13.6 m)

Vehicle weights, G 550	
Gross Vehicle Weight Rating (GVWR)[23]	6615 lbs (3000 kg)
Gross Axle Weight Rating (GAWR), front[24]	3110 lbs (1410 kg)
Gross Axle Weight Rating (GAWR), rear[24]	3965 lbs (1800 kg)

Vehicle data, G 55 AMG (463.271)

The data stated here refers specifically to a vehicle with standard equipment. Consult an authorized Mercedes-Benz Center for the data for all vehicle variants and trim levels.

22 Including spare wheel.

23 GVWR is the maximum total vehicle weight permissible. Gross Vehicle Weight (GVW) is the vehicle weight including fuel, service products, spare wheel, accessories installed, load and, if applicable, trailer drawbar load. The GVW must never exceed the GVWR.

24 The GAWR is the maximum gross axle weight rating.

Vehicle dimensions	
Vehicle length	183.9 in (4672 mm)[25] 188.2 in (4780 mm)[26]
Vehicle width including exterior mirrors	79.0 in (2007 mm)
Vehicle height	76.8 in (1951 mm)
Ground clearance	9.2 in (234 mm)
Wheelbase	112.2 in (2850 mm)
Track width	59.1 in (1501 mm)
Turning circle	44.6 ft (13.6 m)

Vehicle weights	
Gross Vehicle Weight Rating (GVWR)[27]	6615 lbs (3000 kg)
Gross Axle Weight Rating (GAWR), front[28]	3263 lb (1480 kg)
Gross Axle Weight Rating (GAWR), rear[28]	3965 (1800 kg)

25 Including spare wheel.

26 Including spare wheel and styling bar (USA only).

27 GVWR is the maximum total vehicle weight permissible. Gross Vehicle Weight (GVW) is the vehicle weight including fuel, service products, spare wheel, accessories installed, load and, if applicable, trailer drawbar load. The GVW must never exceed the GVWR.

28 The GAWR is the maximum gross axle weight rating.

Publication details

Internet

Further information about Mercedes-Benz vehicles and about Daimler AG can be found on the following websites

http://www.mbusa.com (USA only)

http://www.mercedes-benz.ca (Canada only)

Editorial office

Not to be reprinted, translated or otherwise reproduced, in whole or in part, without written permission of Daimler AG.

As at 18.05.2011

4635842872

Order no. 6515 4133 13 Part no. 463 584 28 72 Edition A 2012