Table of Contents

E60 Active Front Steering

Subject **Page**

Active Front Steering 3
New System Features 3
Advantages of the System 4
Mechanical System Overview 4
System I-P-O 5
System Schematic 6

Components 7
DSC Sensor 7
Active Front Steering Control Unit 8
Input Signals 8
Total Steering-Angle Sensor 9
Steering-Angle Sensor 9
Motor Position Sensor of Actuating Unit 10
Safety and Gateway Module (SGM) 10
Hydraulic Pump 11
Hydraulic Schematic with ECO Valve 11
Power-Steering Cooler 12
Active Front Steering Actuating Unit 12

Principle of Operation 14
Functions of Active Front Steering 14
Variable Steering Gear Ratio 14
Yaw-Rate Control 14
Power-Steering Support 15
System Safety 15

Service Information 16
AFS Initialization/Adjustment 16
Wheel Alignment 17
Interference in Radio Reception 17

Diagnosis, Coding 17
Servotronic 17

cardiagn.com

Initial Print Date: 08/03 Revision Date: 09/03

Model: E60

Production: Start of Production MY 2004

Active Front Steering

Objectives:

After completion of this module you will be able to:

- Understand basic AFS operation
- Locate and Identify AFS components
- Perform AFS Initialization/Start-up procedure
- Perform Wheel Alignments on AFS equipped vehicles

cardiagn.com

Active Front Steering

Conventional rack-and-pinion power steering is used in the E60. Two items of options (SA) are also available:

- Servotronic
- The active front steering system (AFS)

The active front steering option is only available in conjunction with the Servotronic option.

The design and operating principle of the Servotronic option have remained the same as in previous models.

The active front steering system is introduced on BMW vehicles for the first time on the E60.

The electronic controlled steering system assists the driver beyond the usual assist of the power steering with a variable steering ratio. The core element of the steering system is the so-called superimposing gear. The superimposing gear is a ring gear which is part of a simple planetary gear set integrated into the steering rack between the steering spindle and the pinion gear. An electric motor engages the ring gear via a worm gear drive as a function of the vehicle speed. In this way, the steering system can modify the front wheel angle by changing the output ratio of the steering rack. The electric motor can be run in forward or reverse depending on the needs of the AFS system. When the motor is run in the forward direction, the steering is more direct. When the motor is run in reverse, the steering is less direct.

In critical situations, the steering system can specifically modify the wheel angle engaged by the driver and thereby stabilize the vehicle more quickly than the driver. The active front steering system is integrated in the vehicle electrical system via the Powertrain CAN (PT-CAN) and the new Chassis CAN (F-CAN).

The active front steering system is very closely linked to the Dynamic Stability Control (DSC) drive-control system. Sensors and signals used by DSC are also used by the active front steering control unit.

New System Features

The flow rate supplied by the hydraulic pump is adjusted by means of an electrically controllable valve, known as an Electrically Controlled Orifice (ECO). It is controlled as a function of engine speed, road speed and steering wheel angle.

cardiagn.com

Advantages of the System

The active front steering system assists the driver in steering movements and actively introduces additional steering angles into the steering as a function of driving-dynamic variables.

When the vehicle is being parked, only minimal steering wheel movements are needed to deliver large steering angles. Less than 2 turns are needed to move the steering wheel from one lock to the other.

At high speeds, on highways for instance, the steering gear ratio becomes increasingly more indirect right up to the level of conventional steering and even beyond. The simultaneously increasing steering-wheel torque level prevents unintentional steering movements and the driver can feel the improvement in directional stability.

Unintentional vehicle motion, e.g. oversteering, is compensated by the active front steering system without the driver having to take corrective action to maintain the desired course.

Mechanical System Overview

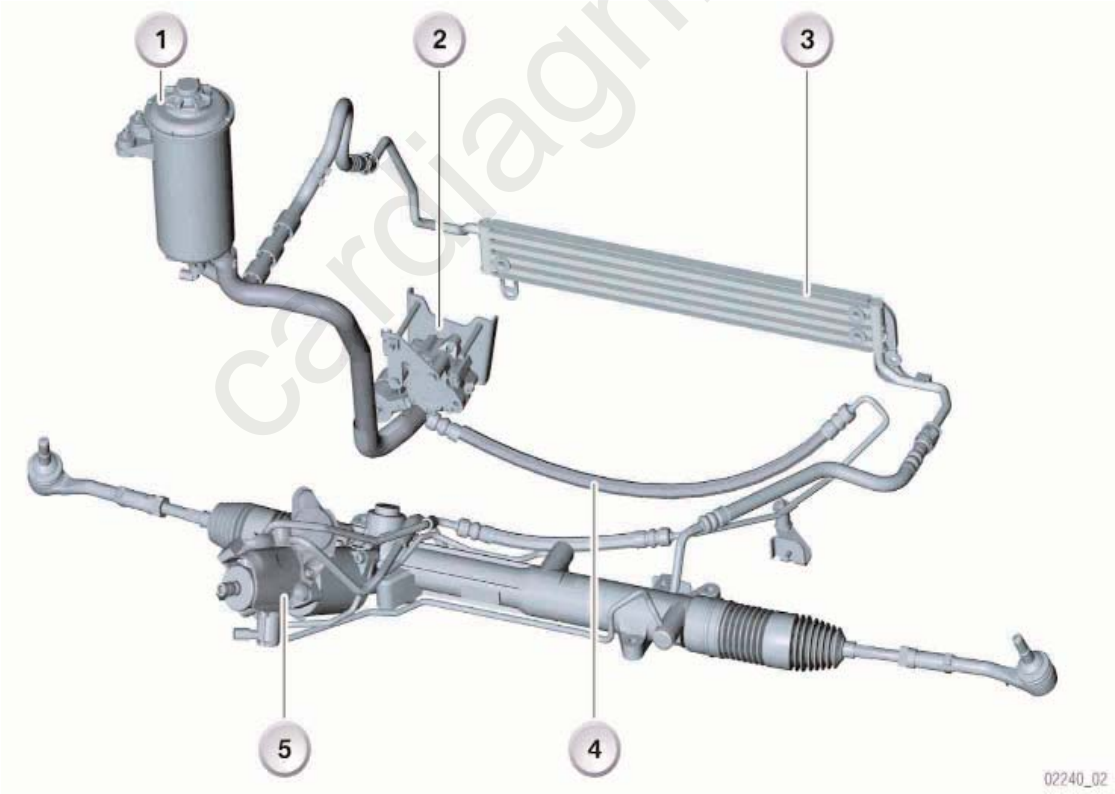

1. Hydraulic fluid reservoir
2. Hydraulic pump with ECO valve
3. Power steering cooler for hydraulic fluid
4. Hydraulic hose
5. Steering gear with actuating unit

cardiagn.com

System I-P-O

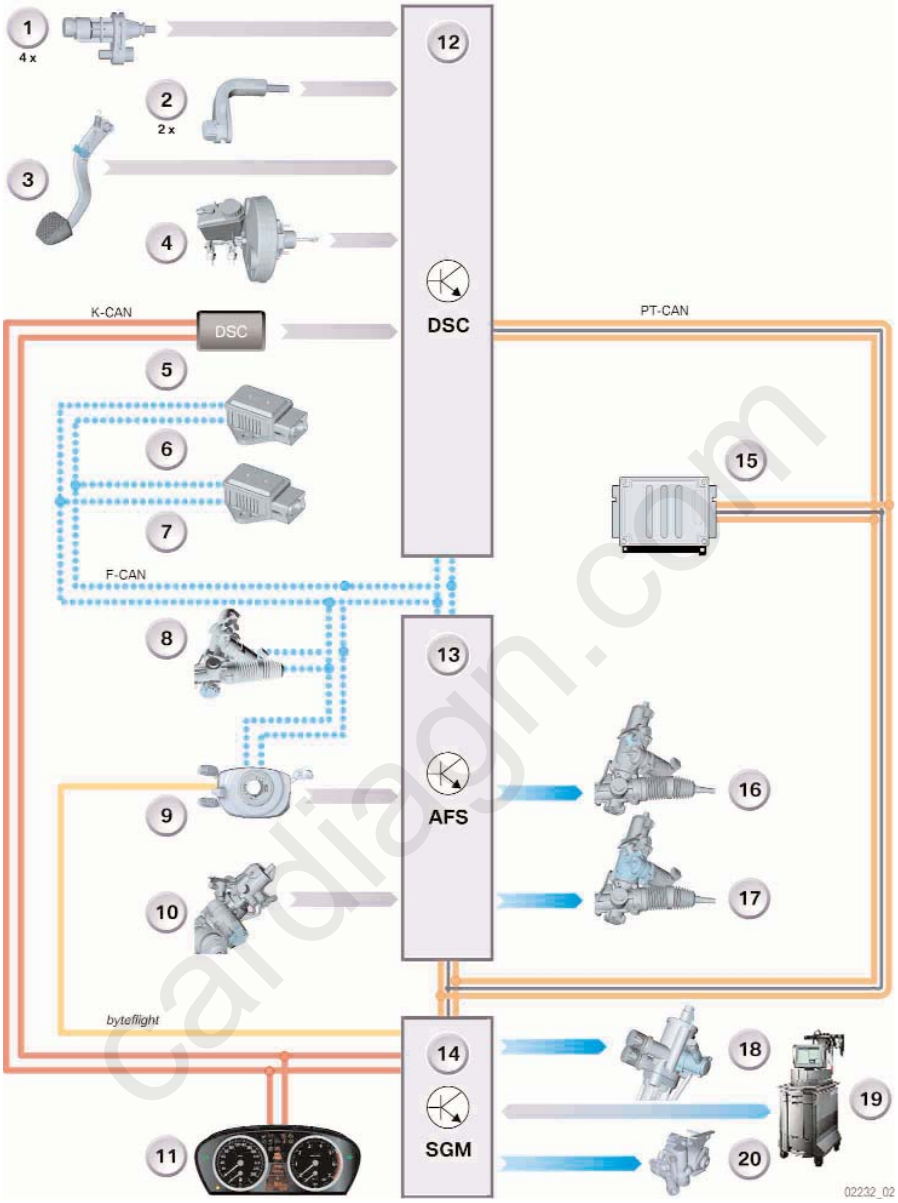

1. Wheel speed sensor
2. Brake pad wear sensors
3. Brake light switch
4. Brake fluid level switch
5. DSC button
6. DSC sensor 1
7. DSC sensor 2
8. Summation steering angle sensor
9. Steering angle sensor
10. Motor position sensor, actuating unit
11. Instrument cluster
12. DSC control unit
13. AFS Active front steering control unit
14. Safety and Gateway Module (SGM)
15. DME Control unit
16. Lock, actuating unit
17. AFS Actuating unit
18. Servotronic valve
19. BMW diagnostic system (DISplus/GT-1)
20. Hydraulic pump with ECO valve

PT-CAN Powertrain CAN
F-CAN Chassis CAN
K-CAN Body CAN

cardiagn.com

System Schematic

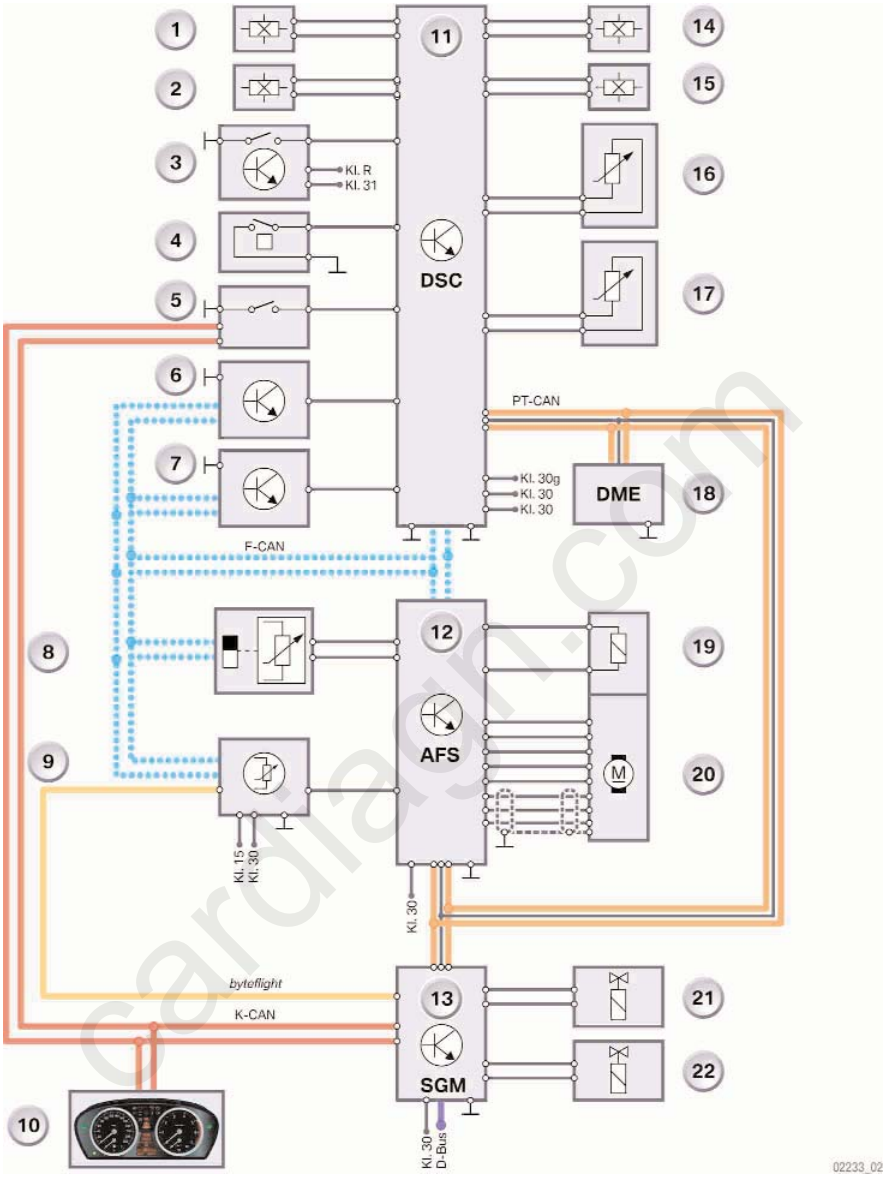

1. Wheel speed sensor, front left
2. Wheel speed sensor, rear left
3. Brake light switch
4. Brake fluid level switch
5. DSC button
6. DSC sensor 1
7. DSC sensor 2
8. Summation steering angle sensor
9. Steering angle sensor
10. Instrument cluster
11. DSC control unit
12. AFS Active front steering control unit
13. Safety and Gateway Module (SGM)
14. Wheel speed sensor, front right
15. Wheel speed sensor, rear right
16. Brake pad wear sensor
17. Brake pad wear sensor
18. DME control unit
19. Lock, actuating unit
20. Electric motor, actuating unit
21. Servotronic valve
22. ECO valve, hydraulic pump

cardiagn.com

Components

DSC Sensor

The lateral-acceleration and yaw-rate sensors are combined in a single housing and designated the DSC sensor. The active front steering system is also provided with a second DSC sensor in addition to the DSC sensor fitted as standard.

DSC sensor 1 is located under the right front seat. DSC sensor 2 is located under the left front seat.

The two DSC sensors are technically identical but coded by means of the software so that they cannot be mixed up. DSC sensor 2 is used for redundant signal acquisition of yaw rate and lateral acceleration.

Both sensors supply yaw-rate and lateral acceleration signals. The use of two DSC sensors makes it possible to perform the plausibility check.

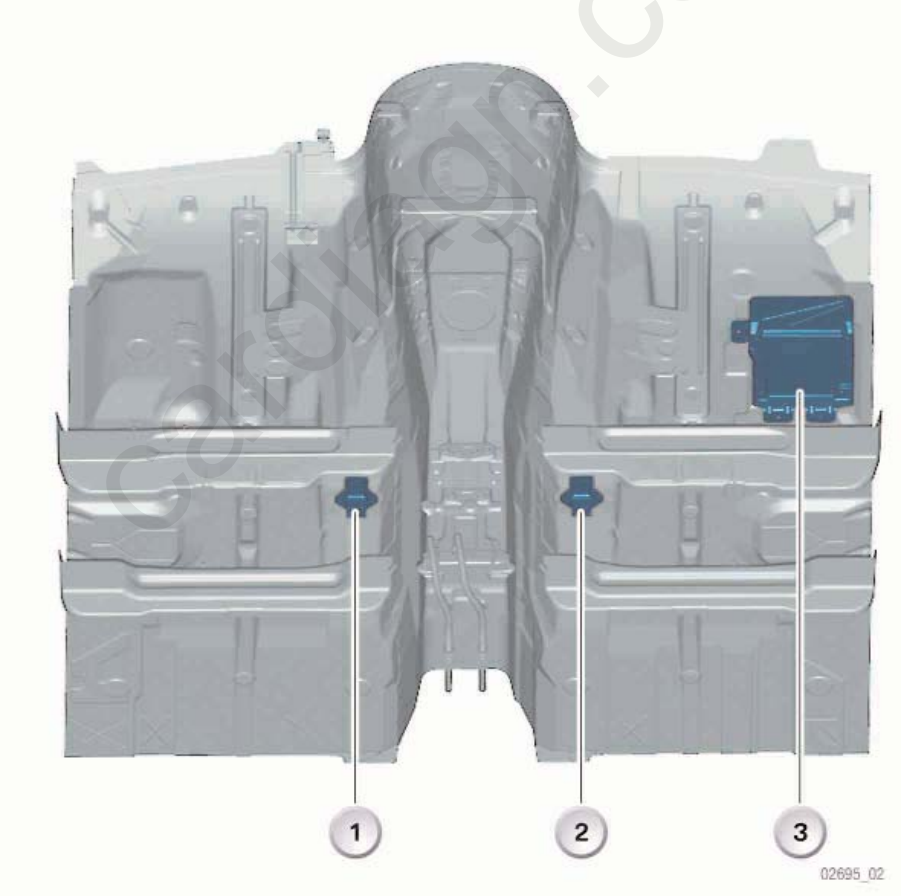

Installation locations of DSC sensors and active front steering control unit

1. DSC sensor 2 for active front steering
2. DSC sensor 1 for brake system
3. Active front steering control unit

Active Front Steering Control Unit

The active front steering control unit is located in the right footwell and screwed down to the floorpan.

The control unit is protected by a kickplate housing.

The kickplate housing incorporates a pin for connecting the shielding for the 3 phases of the active front steering actuating unit.

The control unit is integrated in the vehicle electrical system via the PT-CAN and the F-CAN.

The active front steering control unit calculates the signals for activating the active front steering actuating unit from the various input signals.

Input Signals

- DSC signals (wheel speeds, yaw rate and lateral acceleration)
- Steering angle
- Total (summation) steering angle
- Position of electric servomotor of actuating unit

The active front steering control unit is initialized when the ignition is turned on.

The active front steering actuating unit cannot be activated during the initialization procedure. The sensor signals are checked and calibrated if necessary.

If faults are detected, either the "Error" fault status is adopted or yaw rate control is deactivated. In the case of the "Error" fault status, it is not possible to activate the actuating unit. The "Drive" status is adopted after successful initialization.

The active front steering control unit sends the current message corresponding to the required flow rate to the SGM via the PT-CAN.

cardiagn.com

Total Steering-Angle Sensor

The total (summation) steering-angle sensor is only fitted in the vehicle if the active front steering system is fitted.

The total steering-angle sensor records the rotation angle of the steering pinion and thus the wheel deflection (or actual steering angle) of the vehicle.

The total steering-angle sensor is flange-mounted at the bottom of the steering gear.

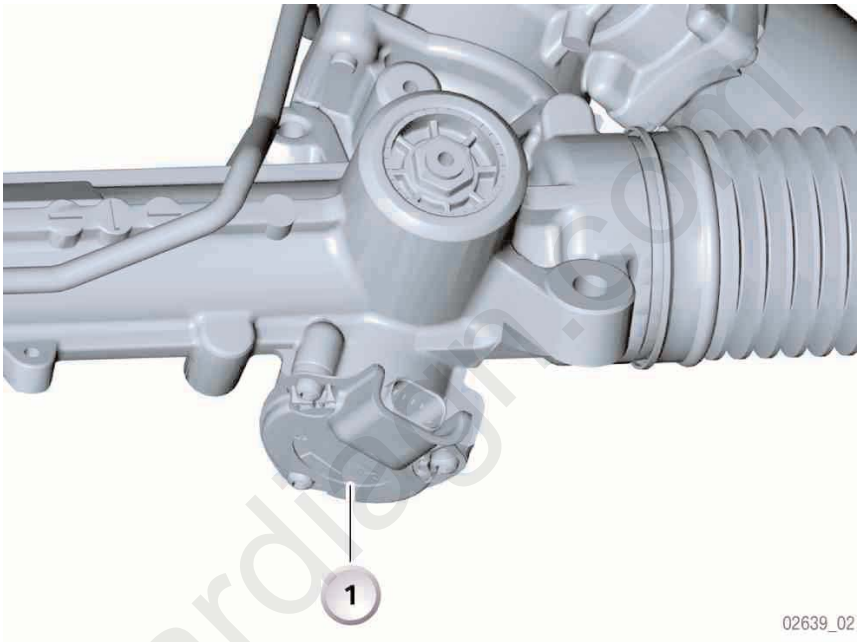

1. Total steering angle sensor

Steering-Angle Sensor

The steering-angle message is directed from the steering column switch cluster (SZL) to the active front steering control unit via a serial interface and via the F-CAN.

The SZL incorporates a second processor for redundant steering-angle calculation. This second processor is only fitted if the active front steering system is fitted and serves to monitor the plausibility of the signal.

The steering-angle sensor is integrated in the steering column switch cluster.

Motor Position Sensor of Actuating Unit

The motor position sensor of the actuating unit is located on the rear side of the electric motor of the active front steering actuating unit.

The motor position sensor consists of a sensor chip and a magnet.

The sensor chip records the position of the electric motor according to the magneto-resistive principle.

The information on the rotor position is sent to the active front steering control unit via a direct line in pulse width modulated form.

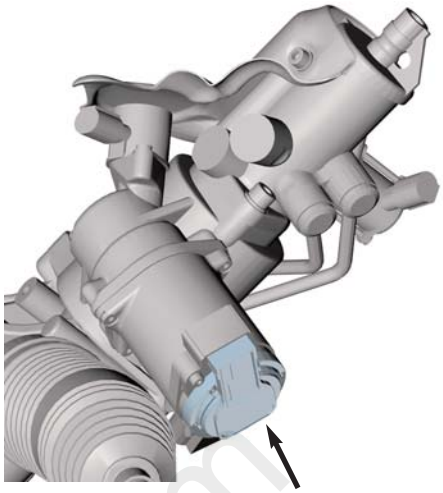

Safety and Gateway Module (SGM)

The SGM consists of a combination of the Central Gateway Module (ZGM) known from the E65 and the Safety and Information Module (SIM).

The SGM is located in the equipment carrier behind the glovebox.

The SGM receives from the active front steering control unit the specified setpoint current for activating the Servotronic valve and the ECO. The SGM activates the Servotronic valve and the ECO in pulse width modulated form.

In vehicles without active front steering, the software for activating the Servotronic valve and the ECO is implemented in the SGM.

cardiagn.com

Hydraulic Pump

The hydraulic pump is a vane pump and is equipped with an electrically controllable valve for regulating the flow rate of the hydraulic fluid. This valve is called the Electrically Controlled Orifice (ECO).

The active front steering system can generate higher wheel-angle speeds compared with conventional rack-and-pinion power steering systems. High hydraulic system flow rates must be maintained in the hydraulic system for the high wheel-angle speeds. In order to deliver the needed hydraulic requirements, a larger power steering pump would need to be installed. However this would increase fuel consumption. An alternative would be to install a controllable hydraulic pump. A conventional pump with the added ECO valve has been installed on the E60.

1. ECO Valve

The hydraulic pump with the ECO regulates the flow rate according to requirements and reduces the dynamic pressure in the steering system.

Hydraulic Schematic with ECO Valve

The low power consumption of the hydraulic pump helps to reduce vehicle fuel consumption and thus CO2 emissions.

The ECO is sprung closed and powered open by the SGM. When the ECO is fully energized, the pump can deliver the maximum flow rate of 15 l/min dependent upon engine speed.

When deactivated and de-energized, the ECO valve is closed and pump delivers a reduced flow rate of approx. 7 l/min for steering-effort support.

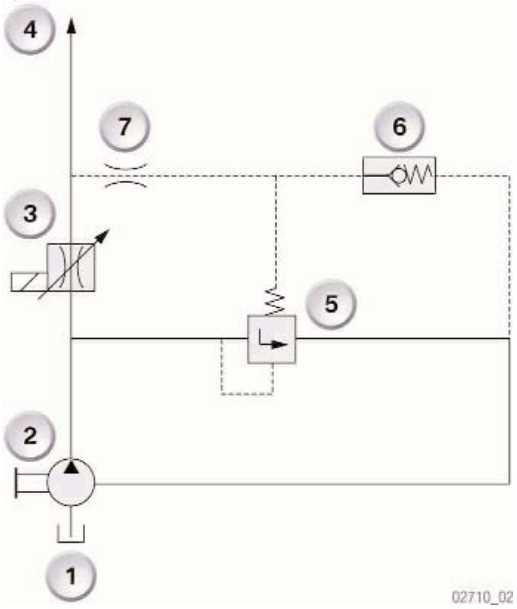

1. Hydraulic reservoir
2. Hydraulic pump
3. ECO valve
4. Rack and pinion power steering
5. Pressure control valve
6. Pressure limiting valve
7. Restrictor orifice

cardiagn.com

Power-Steering Cooler

The power-steering cooler is located on the engine-cooling module. This cooler consists of 4 tubes of rectangular cross-section and soldered fins. The cooler is needed due to the increased hydraulic power needed to deliver higher wheel angle speeds.

Active Front Steering Actuating Unit

The active front steering actuating unit is located on the steering gear. It is integrated in the split steering column between the Servotronic valve and the rack.

This actuating unit comprises a brushless synchronous DC motor and a planetary gear.

The core component of the active front steering actuating unit is a planetary gear with 2 inputs. One input is from the driver via the steering spindle, the other is from the ring gear via the actuator motor

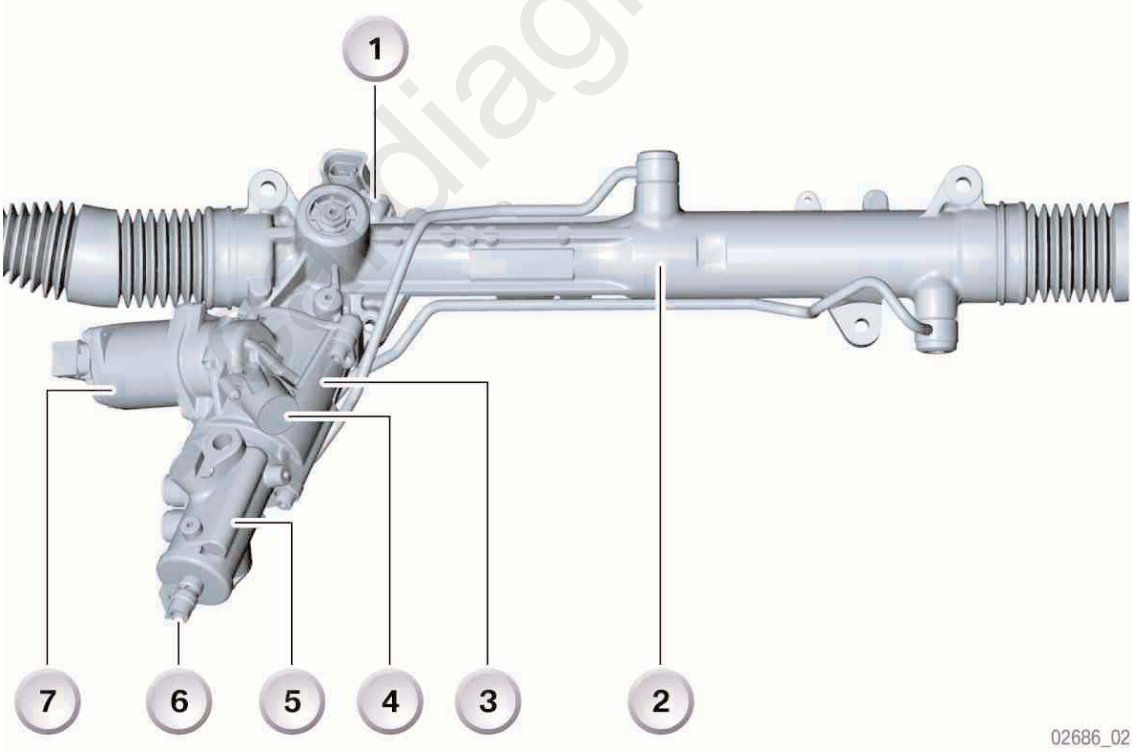

1. Summation steering-angle sensor
2. Rack
3. Planetary-gear housing
4. Magnetic lock
5. Servotronic valve
6. Steering spindle
7. Electric motor

One input shaft is connected via the Servotronic valve to the lower steering spindle. This input shaft is connected to the “sun” gear of the planetary set. The second input comes from the ring gear. The ring gear is driven by the electric motor via a self-locking worm-gear drive as a step-down stage. The wormgear drive actuates the ring gear which superimposes the steering angle of the front wheels specified by the driver.

An electromagnetically controlled safety interlock is fitted. The safety interlock is spring loaded and engages the worm gear drive on the actuator motor when no voltage is applied.

The safety interlock is released at a current of approx.1.8 A.

The rotor position of the electric motor is recorded by the motor position sensor on the motor itself.

The electric motor is powered by way of 3 phases. The 3 phases are energized alternately by the electronics of the active front steering control unit.

The shielding is furnished by the ground connection of the electric motor housing to the body.

However, the actuating forces for the steering angle are not applied by the electric motor but rather by the power steering system.

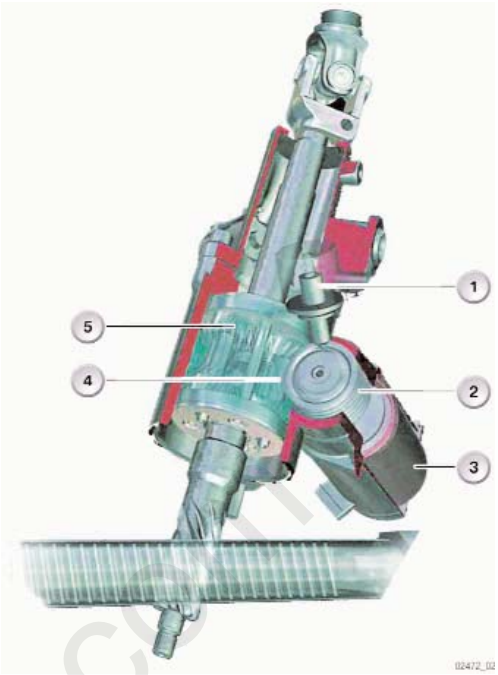

1. Lock
2. Worm-gear drive
3. Electric motor
4. Worm gear
5. Planetary gear

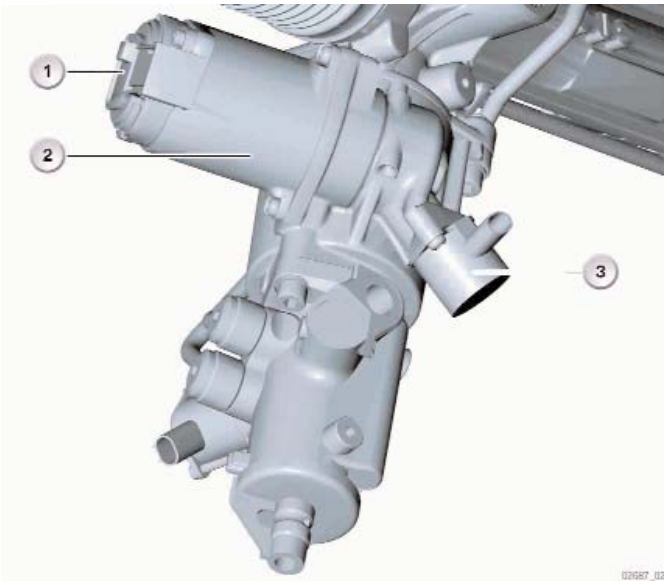

1. Motor position sensor
2. Electric motor
3. Electro-magnetic lock

cardiagn.com

Principle of Operation

Functions of Active Front Steering

Active front steering, which specifically changes the steering angle of the front wheels specified by the driver, sets new standards in terms of agility, comfort and safety.

The system comprises the following functions:

- Variable steering gear ratio
- Yaw-rate control (support of DSC)
- Power-steering support (assist)

Variable Steering Gear Ratio

The variable steering gear ratio adapts the steering gear ratio to the road speed and the steering angle requested by the driver. The steering is designed to be indirect at high speeds and direct at low speeds.

Vehicle maneuverability is significantly increased at slow speeds or when parking by the active front steering actuating unit. The driver no longer needs to grip the steering wheel excessively. When the vehicle is stationary, 2 turns are enough to move the steering wheel from one lock to the other.

At high speeds (> 75 mph), active steering allows a more indirect steering gear ratio than do conventional steering systems. The servomotor operates in the opposite direction to the steering-wheel angle at high speeds.

Unintentional steering movements are prevented in conjunction with the increased steering-torque level (Servotronic).

Yaw-Rate Control

The active front steering system supports the stability functions of DSC.

In dynamic critical situations, active front steering system can specifically modify the steering angle of the front wheels specified by the driver and stabilize the vehicle much more quickly than the driver.

The intervention thresholds of DSC are much higher than those of active front steering. If vehicle oversteering is detected, the active front steering system intervenes first in order to stabilize the vehicle. DSC intervenes only if the steering system is not enough to stabilize the vehicle.

cardiagn.com

Power-Steering Support

Power-steering support is implemented by a conventional rack-and pinion power steering system. Servotronic is available as an option. The electronics and the software for Servotronic are incorporated in the SGM if active front steering is not fitted.

For the active front steering system, the software for power-steering support is incorporated in the active front steering control unit. The output stage for activating the Servotronic valve and the valve in the hydraulic pump (ECO) is located in the SGM. The ECO regulates the hydraulic flow rate in the hydraulic pump in order to provide only the flow rate currently required for the power steering.

System Safety

Unintentional system self-steering is classified as safety-critical behavior by the active front steering system.

The safe system status (failsafe) is the lowest-energy status of the actuating-unit servomotor. Regardless of whether the safe status is brought about by a power loss or by intentional deactivation by the system, it is essential to ensure that the actuating unit does not engage the steering system. The actuating unit is blocked by a lock, which engages the unit's worm-gear drive. The lock is preloaded by a spring and held against the preload by the voltage supply. An interruption of the voltage supply will thus cause the lock to engage the worm-gear drive of the actuating unit.

The locked superimposing gear ensures that manual steering by the driver via the steering column is still possible. The steering then responds like conventional steering. The purely mechanical gear ratio between the steering wheel and the front wheels is maintained.
The electric motor of the active front steering actuating unit is connected with 3 phases. A short circuit to ground thus prevents the electric motor from completing a full rotation as the motor can only rotate a maximum of 120° (360° : 3).

The Servotronic valve switches at zero current to the fast-driving curve. Power-steering support is reduced accordingly. When the ECO is at zero current, the flow rate is 7 l/min.

If the active front steering control unit does not send a valid message on the PT-CAN, the SGM operates after 100 ms with a road speed-dependent substitute curve. The substitute curve ensures sufficient steering properties for the passive active front steering system.

cardiagn.com

The driver is alerted to system faults by way of a warning lamp, a variable warning lamp and Check Control messages in the instrument cluster.

The Check Control message runs as follows: ***AFS failure! Steer with care.***

The following information appears in the control display:

Steering behavior altered! Possible to continue the journey. Steering wheel may be at angle. Have the problem checked by the nearest BMW Service.

Switch-on Conditions

The switch-on conditions for the active front steering system are terminal 15 On and a running engine.

When the engine is started, the system performs a synchronization of the steering-wheel position and the steering angle. This ensures that steering-wheel position and steering angle match up after steering wheel movements when the system is deactivated (passive status). Steering-wheel movements or movements by the wheels can be discerned.

Service Information

AFS Initialization/Adjustment

The technician must perform the initialization/adjustment procedure after performing the following work:

- Any alignment adjustments or steering component replacement
- Steering column work
- After replacement or programming of the AFS control module
- After replacement or programming of the SZL control module

A steering-angle adjustment (offset) must be carried out if the SZL or the steering rack is replaced. This must be carried out on the KDS (alignment equipment).

The total steering-angle sensor on the steering gear is calibrated to the middle of the rack at the steering-gear manufacturer.

The AFS adjustments can be found in the service functions menu of the DISplus/GT-1.

cardiagn.com

Wheel Alignment

If the vehicle requires a wheel alignment, the initialization procedure must be started before beginning the alignment. Using the DISplus/GT-1, complete the following steps:

- Access the test module for “Startup adjustment/AFS. When prompted, answer “Yes” to the alignment question.
- Center steering rack and check alignment marks on the steering gear
- Install tool # 324150 and lock steering wheel
- Proceed with alignment
- After completing the last steps of the alignment (front toe adj), remove 324150.
- Proceed with the remaining portion of the test module.

This will set the total steering angle to 0 degrees by locking the superimposing gear (ring gear). The AFS control module will de-energize the electromagnetic lock which will hold the AFS actuator motor which will in turn hold the superimposing gear stationary. If alignment is attempted without performing this procedure, the steering will be off-center by a considerable amount. Special tool # 324150 is used to hold the steering wheel in the center position. Failure to use the special tool will result in an off-center steering wheel.

Interference in Radio Reception

Interference in radio reception can be caused by there being no connection of the shielding of the 3 phases of the actuating unit to the housing of the active front steering control unit.

Diagnosis, Coding

Servotronic

Servotronic is activated in diagnosis as an independent control unit, the output stage for Servotronic is located in the SGM. Only the vehicle-specific configuration is entered by way of coding.

cardiagn.com

Workshop Exercise - AFS Adjustments

Remove underbody panels and thrust plate from vehicle and install special tool # 324150. Why is tool # 324150 needed to perform an alignment?

Remove special tool # 324150. Leave underbody panels and thrust plate off.

Using DISplus/GT-1 perform short test. Access test plan for "Startup Adjustment/AFS". Answer "Yes" to alignment question.

List the sequence of components adjusted during this procedure:

What is the difference between answering Yes or No at the beginning of this procedure?

When should the Startup/Adjustment be performed?

List the steps for performing an alignment on a vehicle equipped with AFS:

What 2 special tools are specific to the E60 wheel alignment?

cardiagn.com

Workshop Exercise - AFS Adjustments

With the engine running, How many turns of the steering wheel are required to go from lock to lock?

_____

Under control unit functions page, locate the status request for "Value Steering Angle".

With the steering wheel in the straight ahead position, note the values for:

Driver's steering angle _____

Total steering angle _____

With the engine running, turn the wheel from lock to lock and note the changes in the above angles. What is observed regarding the difference between these angles?

_____

_____

Turn the steering wheel to the left lock position and disconnect the AFS motor connection. Turn the steering wheel back to the straight ahead position and note the new steering angle values:

Driver's steering angle _____

Total steering angle _____

Are the values the same for the straight ahead position? Why or Why not?

_____

_____

Reconnect AFS motor connection, clear fault codes and perform "Startup Adjustment/AFS".

List the path taken to access the test plan for "Startup Adjustment/AFS".

_____

_____

_____

Re-install underbody panels and thrust plate on vehicle.

cardiagn.com