HEATER & AIR CONDITIONER

SECTION HA

CONTENTS

PRECAUTIONS 2
Supplemental Restraint System (SRS) "AIR BAG" and "SEAT BELT PRE-TENSIONER"....2
Precautions for Working with HFC-134a (R-134a) 2
General Refrigerant Precautions....2
Precautions for Refrigerant Connection 3
Precautions for Servicing Compressor....5
Precautions for Service Equipment....6
Wiring Diagrams and Trouble Diagnosis....8
PREPARATION 9
Special Service Tools 9
HFC-134a (R-134a) Service Tools and Equipment....11
DESCRIPTION....13
Refrigeration System 13
CSV613 Variable Displacement Compressor....14
Component Layout 18
Control Operation 19
Discharge Air Flow....20
System Description....21
TROUBLE DIAGNOSES....22
Component Location....22
Wiring Diagram - Heater....24
Circuit Diagram - Air Conditioner....26
Wiring Diagram - A/C, M - 27
How to Perform Trouble Diagnoses for Quick and Accurate Repair 33
Operational Check 34
Intake Door 36
Mode Door 40
Air Mix Door....42
Max Hot Door (For Scandinavia and Cold Spec Models) 44
Blower Motor....48
Magnet Clutch....55
Insufficient Cooling 68
Insufficient Heating 76
Noise....77
SERVICE PROCEDURE....78
HFC-134a (R-134a) Service Procedure 78
Maintenance of Lubricant Quantity in Compressor 80
Compressor 83
Compressor Clutch - CSV613 (CALSONIC make)....84
Heater & Cooling Unit (Heater Core) 88
A/C Evaporator 88
Blower Unit 89
Refrigerant Lines 91
Belt....95
Idle Air Control Valve (IACV) - Auxiliary Air Control (AAC) Valve 96
Ventilation Air Filter....96
SERVICE DATA AND SPECIFICATIONS (SDS) 97
Compressor 97
Lubricant 97
Refrigerant 97
Engine Idling Speed (When A/C is On)....97
Belt Tension 97

Supplemental Restraint System (SRS) "AIR BAG" and "SEAT BELT PRE-TENSIONER"

NJHA0190

The Supplemental Restraint System such as "AIR BAG" and "SEAT BELT PRE-TENSIONER" used along with a seat belt, helps to reduce the risk or severity of injury to the driver and front passenger for certain types of collision. The SRS system composition which is available to NISSAN MODEL N16 is as follows (The composition varies according to the destination and optional equipment.):

- For a frontal collision
  The Supplemental Restraint System consists of driver air bag module (located in the center of the steering wheel), front passenger air bag module (located on the instrument panel on passenger side), front seat belt pre-tensioners, a diagnosis sensor unit, warning lamp, wiring harness and spiral cable.
- For a side collision
  The Supplemental Restraint System consists of front side air bag module (located in the outer side of front seat), side air bag (satellite) sensor, diagnosis sensor unit (one of components of air bags for a frontal collision), wiring harness, warning lamp (one of components of air bags for a frontal collision).

Information necessary to service the system safely is included in the **RS section** of this Service Manual.

WARNING:

- **To avoid rendering the SRS inoperative, which could increase the risk of personal injury or death in the event of a collision which would result in air bag inflation, all maintenance should be performed by an authorized NISSAN dealer.**
- **Improper maintenance, including incorrect removal and installation of the SRS, can lead to personal injury caused by unintentional activation of the system. For removal of Spiral Cable and Air Bag Module, see the RS section.**
- **Do not use electrical test equipment on any circuit related to the SRS unless instructed to in this Service Manual. Spiral cable and wiring harnesses covered with yellow insulation tape either just before the harness connectors or for the complete harness are related to the SRS.**

Precautions for Working with HFC-134a (R-134a)

NJHA0113

WARNING:

- **CFC-12 (R-12) refrigerant and HFC-134a (R-134a) refrigerant are not compatible. These refrigerants must never be mixed, even in the smallest amounts. If the refrigerants are mixed, compressor failure is likely to occur.**
- **Use only specified lubricant for the HFC-134a (R-134a) A/C system and HFC-134a (R-134a) components. If lubricant other than that specified is used, compressor failure is likely to occur.**
- **The specified HFC-134a (R-134a) lubricant rapidly absorbs moisture from the atmosphere. The following handling precautions must be observed:**

a) When removing refrigerant components from a vehicle, immediately cap (seal) the component to minimize the entry of moisture from the atmosphere.

b) When installing refrigerant components to a vehicle, do not remove the caps (unseal) until just before connecting the components. Connect all refrigerant loop components as quickly as possible to minimize the entry of moisture into system.

c) Only use the specified lubricant from a sealed container. Immediately reseal containers of lubricant. Without proper sealing, lubricant will become moisture saturated and should not be used.

d) Avoid breathing A/C refrigerant and lubricant vapor or mist. Exposure may irritate eyes, nose and throat. Remove R-134a from the A/C system, using certified service equipment meeting requirements of R-134a recycling equipment, or R-134a recovery equipment. If accidental system discharge occurs, ventilate work area before resuming service. Additional health and safety information may be obtained from refrigerant and lubricant manufacturers.

e) Do not allow lubricant (Nissan A/C System Oil Type S) to come in contact with styrofoam parts. Damage may result.

General Refrigerant Precautions

NJHA0114

WARNING:

- **Do not release refrigerant into the air. Use approved recovery/recycling equipment to capture the refrigerant every time an air conditioning system is discharged.**
- **Always wear eye and hand protection (goggles and gloves) when working with any refrigerant or air conditioning system.**

- **Do not store or heat refrigerant containers above 52°C (125°F).**
- **Do not heat a refrigerant container with an open flame; if container warming is required, place the bottom of the container in a warm pail of water.**
- **Do not intentionally drop, puncture, or incinerate refrigerant containers.**
- **Keep refrigerant away from open flames: poisonous gas will be produced if refrigerant burns.**
- **Refrigerant will displace oxygen, therefore be certain to work in well ventilated areas to prevent suffocation.**
- **Do not pressure test or leak test HFC-134a (R-134a) service equipment and/or vehicle air conditioning systems with compressed air during repair. Some mixtures of air and R-134a have been shown to be combustible at elevated pressures. These mixtures, if ignited, may cause injury or property damage. Additional health and safety information may be obtained from refrigerant manufacturers.**

Precautions for Refrigerant Connection

NJHA0115

A new type refrigerant connection has been introduced to all refrigerant lines except the following portion.

- Expansion valve to cooling unit

FEATURES OF NEW TYPE REFRIGERANT CONNECTION

NJHA0115S01

- The O-ring has been relocated. It has also been provided with a groove for proper installation. This eliminates the chance of the O-ring being caught in, or damaged by, the mating part. The sealing direction of the O-ring is now set vertically in relation to the contacting surface of the mating part to improve sealing characteristics.
- The reaction force of the O-ring will not occur in the direction that causes the joint to pull out, thereby facilitating piping connections.

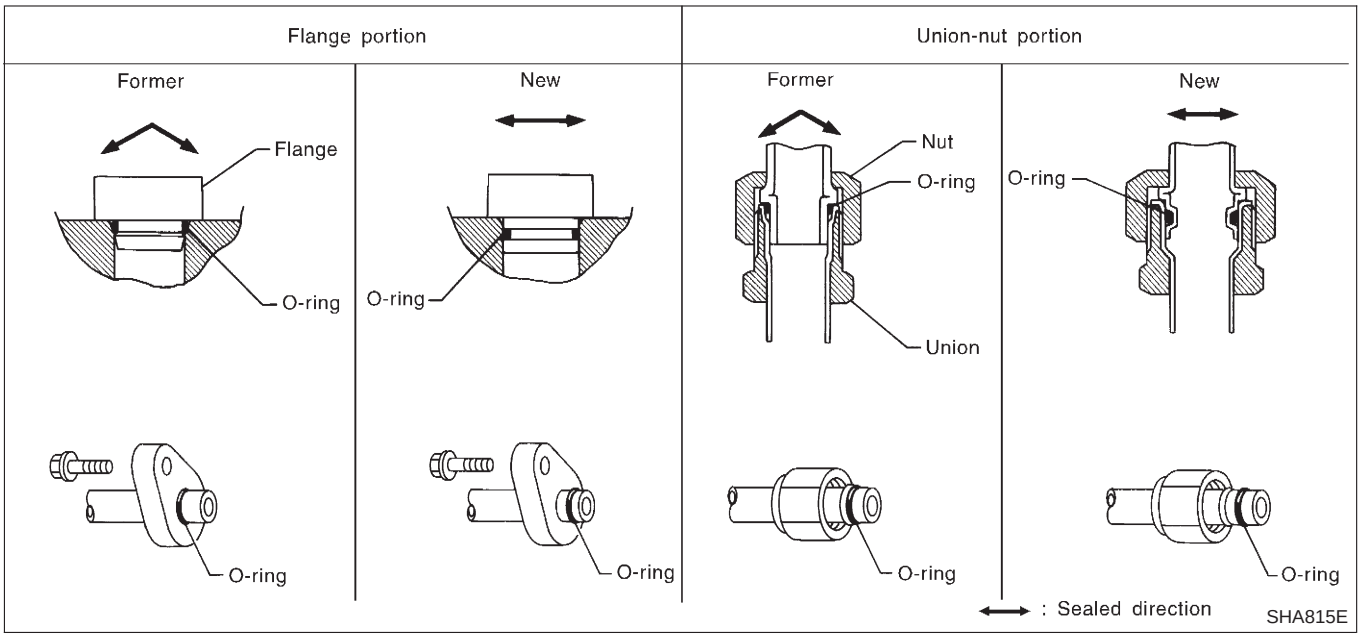

O-RING AND REFRIGERANT CONNECTION

NJHA0115S02

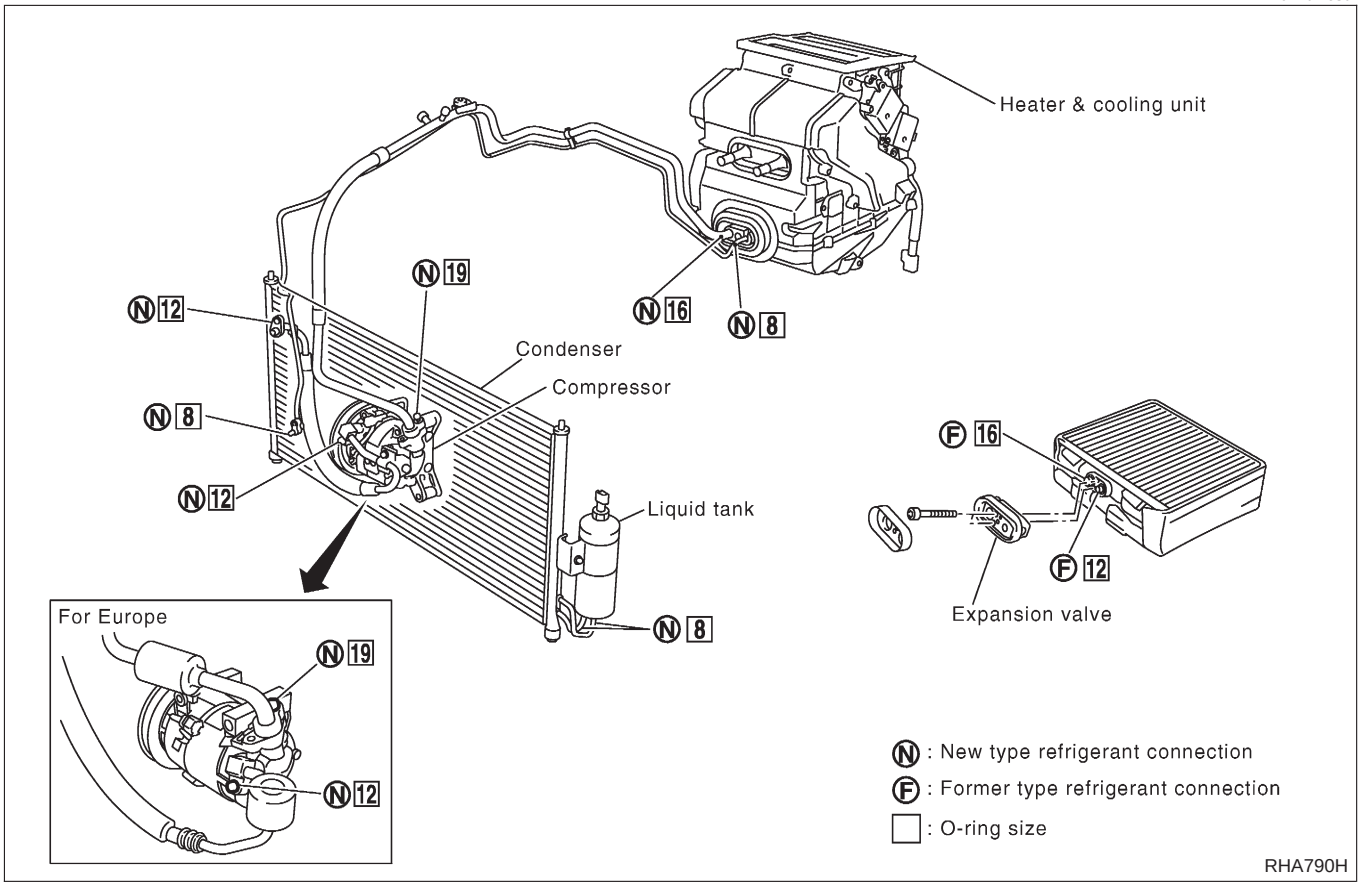

CAUTION:
The new and former refrigerant connections in some systems use different O-ring configurations. Do not confuse O-rings since they are not interchangeable. If a wrong O-ring is installed, refrigerant will leak at, or around, the connection.

O-Ring Part Numbers and Specifications

NJHA0115S0201

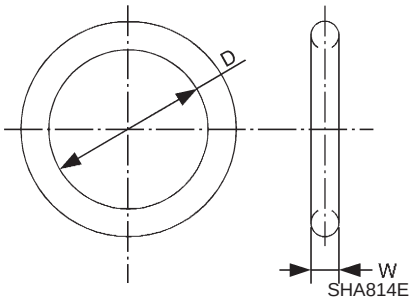

Connection type	O-ring size	Part number	D mm (in)	W mm (in)
New	8	92471 N8210	6.8 (0.268)	1.85 (0.0728)
New	12	92472 N8210	10.9 (0.429)	2.43 (0.0957)
Former		92475 71L00	11.0 (0.433)	2.40 (0.0945)
New	16	92473 N8210	13.6 (0.535)	2.43 (0.0957)
Former		92475 72L00	14.3 (0.563)	2.30 (0.0906)
New	19	92474 N8210	16.5 (0.650)	2.43 (0.0957)

WARNING:
Make sure all refrigerant is discharged into the recycling equipment and the pressure in the system is less than atmospheric pressure. Then gradually loosen the discharge side hose fitting and remove it.

CAUTION:
When replacing or cleaning refrigerant cycle components, observe the following.

- **When the compressor is removed, store it in the same position as it is when mounted on the car. Failure to do so will cause lubricant to enter the low pressure chamber.**
- **When connecting tubes, always use a torque wrench and a back-up wrench.**
- **After disconnecting tubes, immediately plug all openings to prevent entry of dirt and moisture.**

- **When installing an air conditioner in the vehicle, connect the pipes as the final stage of the operation. Do not remove the seal caps of pipes and other components until just before required for connection.**
- **Allow components stored in cool areas to warm to working area temperature before removing seal caps. This prevents condensation from forming inside A/C components.**
- **Thoroughly remove moisture from the refrigeration system before charging the refrigerant.**
- **Always replace used O-rings.**
- **When connecting tube, apply lubricant to circle of the O-rings shown in illustration. Be careful not to apply lubricant to threaded portion.**
  Lubricant name: Nissan A/C System Oil Type R for DKV-11G compressor
  Part number: KLH00-PAGR0
  Lubricant name: Nissan A/C System Oil Type S for CSV613 compressor
  Part number: KLH00-PAGS0
- **O-ring must be closely attached to dented portion of tube.**
- **When replacing the O-ring, be careful not to damage O-ring and tube.**
- **Connect tube until you hear it click, then tighten the nut or bolt by hand until snug. Make sure that the O-ring is installed to tube correctly.**
- **After connecting line, conduct leak test and make sure that there is no leakage from connections. When the gas leaking point is found, disconnect that line and replace the O-ring. Then tighten connections of seal seat to the specified torque.**

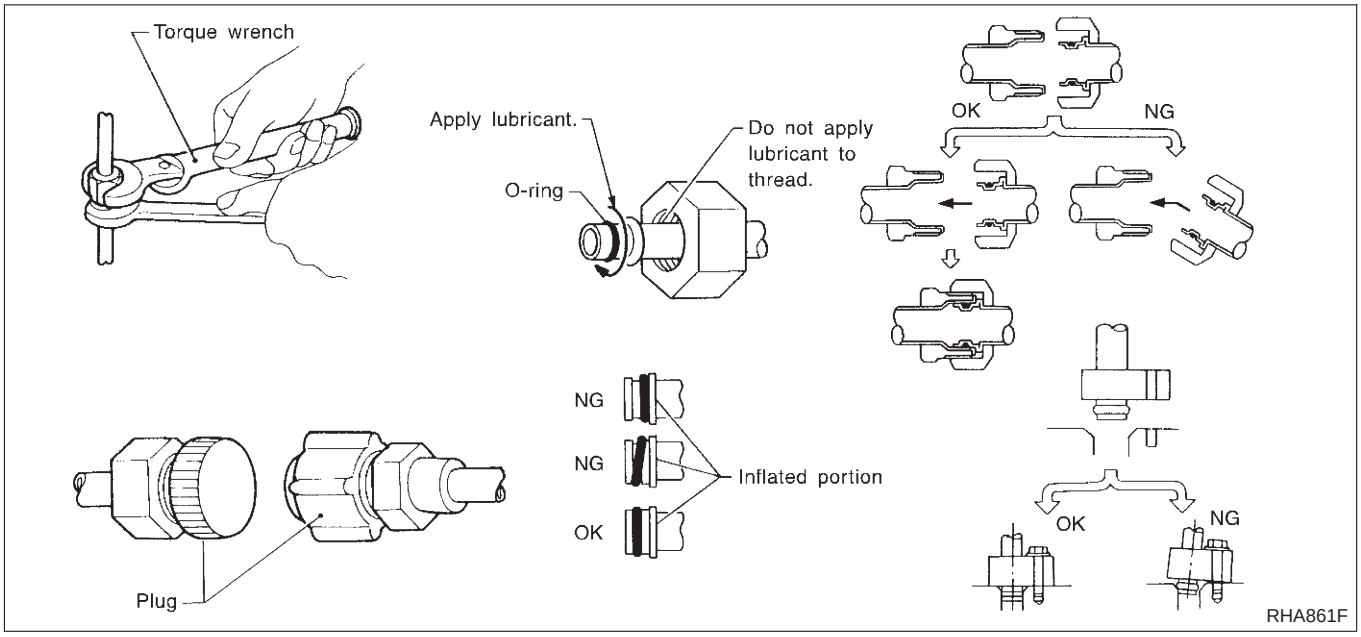

Precautions for Servicing Compressor

NJHA0116

- **Plug all openings to prevent moisture and foreign matter from entering.**
- **When the compressor is removed, store it in the same position as it is when mounted on the car.**
- **When replacing or repairing compressor, follow "Maintenance of Lubricant Quantity in Compressor" exactly. Refer to HA-80.**
- **Keep friction surfaces between clutch and pulley clean. If the surface is contaminated, with lubricant, wipe it off by using a clean waste cloth moistened with thinner.**
- **After compressor service operation, turn the compressor shaft by hand more than five turns in both directions. This will equally distribute lubricant inside the compressor. After the compressor is installed, let the engine idle and operate the compressor for one hour.**
- **After replacing the compressor magnet clutch, apply voltage to the new one and check for normal operation.**

Precautions for Service Equipment

NJHA0117

RECOVERY/RECYCLING EQUIPMENT

NJHA0117S01

Follow the manufacturer's instructions for machine operation and machine maintenance. Never introduce any refrigerant other than that specified into the machine.

ELECTRONIC LEAK DETECTOR

NJHA0117S02

Follow the manufacture's instructions for tester operation and tester maintenance.

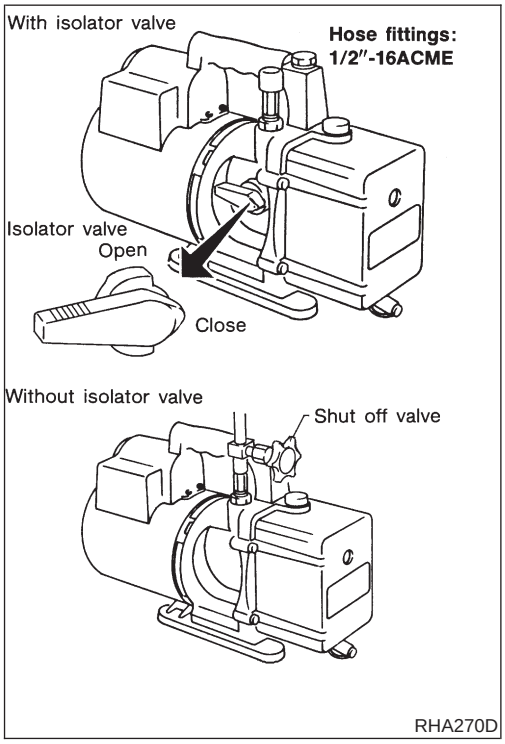

VACUUM PUMP

NJHA0117S03

The lubricant contained inside the vacuum pump is not compatible with the specified lubricant for HFC-134a (R-134a) A/C systems. The vent side of the vacuum pump is exposed to atmospheric pressure. So the vacuum pump lubricant may migrate out of the pump into the service hose. This is possible when the pump is switched off after evacuation (vacuuming) and hose is connected to it.

To prevent this migration, use a manual valve situated near the hose-to-pump connection, as follows.

- Usually vacuum pumps have a manual isolator valve as part of the pump. Close this valve to isolate the service hose from the pump.
- For pumps without an isolator, use a hose equipped with a manual shut-off valve near the pump end. Close the valve to isolate the hose from the pump.
- If the hose has an automatic shut off valve, disconnect the hose from the pump: as long as the hose is connected, the valve is open and lubricating oil may migrate.

Some one-way valves open when vacuum is applied and close under a no vacuum condition. Such valves may restrict the pump's ability to pull a deep vacuum and are not recommended.

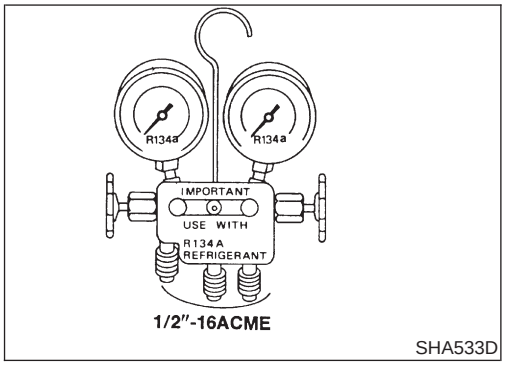

MANIFOLD GAUGE SET

NJHA0117S04

Be certain that the gauge face indicates R-134a or 134a. Make sure the gauge set has 1/2″-16 ACME threaded connections for service hoses. Confirm the set has been used only with refrigerant HFC-134a (R-134a) along with specified lubricant.

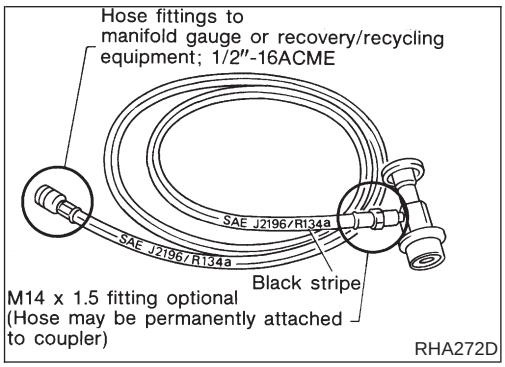

SERVICE HOSES

NJHA0117S05

Be certain that the service hoses display the markings described (colored hose with black stripe). All hoses must include positive shut off devices (either manual or automatic) near the end of the hoses opposite the manifold gauge.

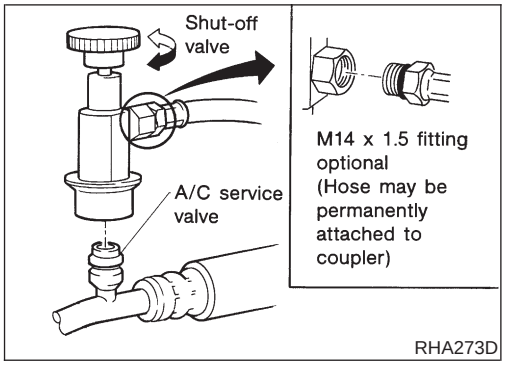

SERVICE COUPLERS

NJHA0117S06

Never attempt to connect HFC-134a (R-134a) service couplers to an CFC-12 (R-12) A/C system. The HFC-134a (R-134a) couplers will not properly connect to the CFC-12 (R-12) system. However, if an improper connection is attempted, discharging and contamination may occur.

Shut-off valve rotation	A/C service valve
Clockwise	Open
Counterclockwise	Close

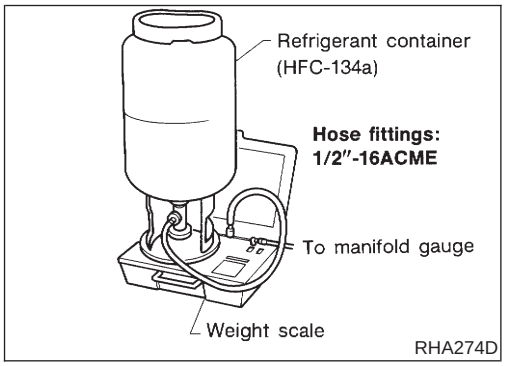

REFRIGERANT WEIGHT SCALE

NJHA0117S07

Verify that no refrigerant other than HFC-134a (R-134a) and specified lubricants have been used with the scale. If the scale controls refrigerant flow electronically, the hose fitting must be 1/2″-16 ACME.

CALIBRATING ACR4 WEIGHT SCALE

NJHA0117S09

Calibrate the scale every three months.
To calibrate the weight scale on the ACR4:

1. Press **Shift/Reset** and **Enter** at the same time.
2. Press **8787**. "**A1**" will be displayed.
3. Remove all weight from the scale.
4. Press **0**, then press **Enter**. "**0.00**" will be displayed and change to "**A2**".
5. Place a known weight (dumbbell or similar weight), between 4.5 and 36.3 kg (10 and 80 lb) on the center of the weight scale.
6. Enter the known weight using four digits. (Example 10 lb = "**10.00**", 10.5 lb = "**10.50**")
7. Press **Enter** — the display returns to the vacuum mode.
8. Press **Shift/Reset** and **Enter** at the same time.
9. Press **6** — the known weight on the scale is displayed.
10. Remove the known weight from the scale. "**0.00**" will be displayed.
11. Press **Shift/Reset** to return the ACR4 to the program mode.

CHARGING CYLINDER

NJHA0117S08

Using a charging cylinder is not recommended. Refrigerant may be vented into air from cylinder's top valve when filling the cylinder with refrigerant. Also, the accuracy of the cylinder is generally less than that of an electronic scale or of quality recycle/recharge equipment.

Wiring Diagrams and Trouble Diagnosis

NJHA0118

When you read wiring diagrams, refer to the following:

- GI-11, “HOW TO READ WIRING DIAGRAMS”
- Sedan: EL-11 (QG), EL-19 (YD), Hatchback: EL-28, “Wiring Diagram — POWER —”.

When you perform trouble diagnosis, refer to the following:

- GI-32, “HOW TO FOLLOW TROUBLE DIAGNOSES”
- GI-21, “HOW TO PERFORM EFFICIENT DIAGNOSIS FOR AN ELECTRICAL INCIDENT”

Special Service Tools

DKV-11G COMPRESSOR

NJHA0119

NJHA0119S01

Tool number Tool name	Description	
KV99231260 Clutch disc wrench	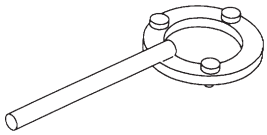 NT204	Removing shaft nut and clutch disc
KV99232340 Clutch disc puller	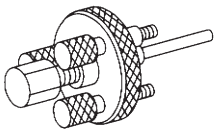 NT206	Removing clutch disc
KV99234330 Pulley installer	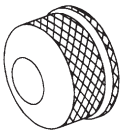 NT207	Installing pulley
KV99233130 Pulley puller	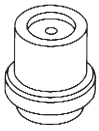 NT208	Removing pulley

CSV613 COMPRESSOR

NJHA0119S02

Tool number Tool name	Description	
KV99106100 Clutch disc wrench	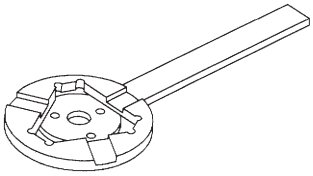 NT232 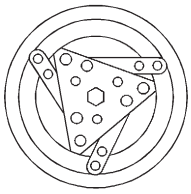 When replacing the magnet clutch in the above compressor, use a clutch disc wrench with the pin side on the clutch disc to remove it. 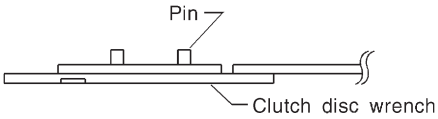 NT378	Removing center bolt

Special Service Tools (Cont'd)

Tool number Tool name	Description	
KV99232340 Clutch disc puller	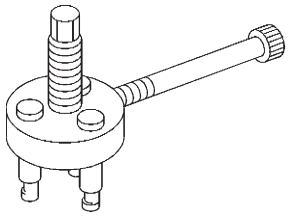 NT376	Removing clutch disc
KV99106200 Pulley installer	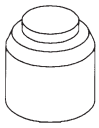 NT235	Installing pulley

HFC-134a (R-134a) Service Tools and Equipment

=NJHA0120

Never mix HFC-134a refrigerant and/or its specified lubricant with CFC-12 (R-12) refrigerant and/or its lubricant.
Separate and non-interchangeable service equipment must be used for handling each type of refrigerant/lubricant.
Refrigerant container fittings, service hose fittings and service equipment fittings (equipment which handles refrigerant and/or lubricant) are different between CFC-12 (R-12) and HFC-134a (R-134a). This is to avoid mixed use of the refrigerants/lubricant.
Adapters that convert one size fitting to another must never be used: refrigerant/lubricant contamination will occur and compressor failure will result.

Tool number Tool name	Description	
HFC-134a (R-134a) refrigerant	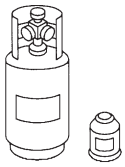 NT196	Container color: Light blue Container marking: HFC-134a (R-134a) Fitting size: Thread size ● Large container 1/2″-16 ACME
KLH00-PAGR0 Nissan A/C System Oil Type R KLH00-PAGS0 Nissan A/C System Oil Type S	 NT197	Type: Poly alkylene glycol oil (PAG), type R Application: HFC-134a (R-134a) vane rotary compressors (Nissan only) Type S Application: HFC-134a (R-134a) swash plate compressors (Nissan only) Lubricity: 40 mℓ (1.4 Imp fl oz)
Recovery/Recycling Recharging equipment (ACR4)	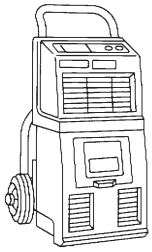 NT195	Function: Refrigerant Recovery and Recycling and Recharging
Electrical leak detector	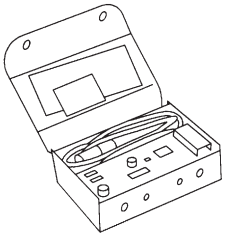 NT198	Power supply: ● DC 12V (Cigarette lighter)
Manifold gauge set (with hoses and couplers)	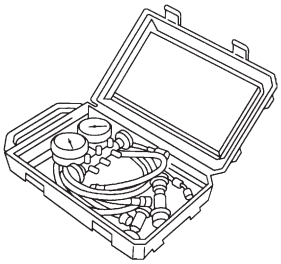 NT199	Identification: ● The gauge face indicates R-134a. Fitting size: Thread size ● 1/2″-16 ACME

HFC-134a (R-134a) Service Tools and Equipment (Cont'd)

Tool number Tool name	Description	
Service hoses ● High side hose ● Low side hose ● Utility hose	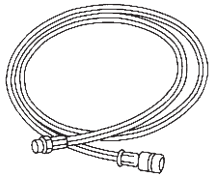 NT201	Hose color: ● Low hose: Blue with black stripe ● High hose: Red with black stripe ● Utility hose: Yellow with black stripe or green with black stripe Hose fitting to gauge: ● 1/2″-16 ACME
Service couplers ● High side coupler ● Low side coupler	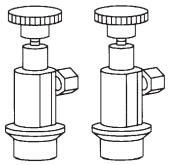 NT202	Hose fitting to service hose: ● M14 x 1.5 fitting is optional or permanently attached.
Refrigerant weight scale	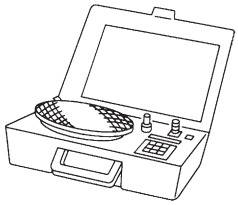 NT200	For measuring of refrigerant Fitting size: Thread size ● 1/2″-16 ACME
Vacuum pump (Including the isolator valve)	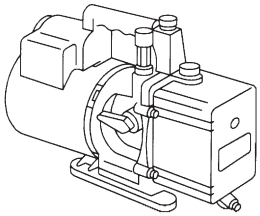 NT203	Capacity: ● Air displacement: 4 CFM ● Micron rating: 20 microns ● Oil capacity: 482 g (17 oz) Fitting size: Thread size ● 1/2″-16 ACME

Refrigeration System

REFRIGERATION CYCLE

NJHA0121

Refrigerant Flow

NJHA0121S01

The refrigerant flows in the standard pattern, that is, through the compressor, the condenser, the liquid tank, through the evaporator, and back to the compressor. The refrigerant evaporation through the evaporator coil is controlled by an externally equalized expansion valve, located inside the heater & cooling unit.

Freeze Protection

NJHA0121S02

The compressor cycles go on and off to maintain the evaporator temperature within a specified range. When the evaporator coil temperature falls below a specified point, the thermo control amplifier interrupts the compressor operation. When the evaporator coil temperature rises above the specification, the thermo control amplifier allows compressor operation.

Refrigerant System Protection

NJHA0121S03

Refrigerant Pressure Sensor

NJHA0121S0303

The refrigerant system is protected against excessively high or low pressures by the refrigerant pressure sensor, located on the liquid tank. If the system pressure rises above, or falls below the specifications, the refrigerant pressure sensor detects the pressure inside the refrigerant line and sends the voltage signal to the ECM. ECM makes the A/C relay go OFF and stops the compressor when pressure on the high pressure side detected by refrigerant pressure sensor is over about 2,746 kPa (27.5 bar, 28 kg/cm^2, 398 psi) or below about 137 kPa (1.37 bar, 1.4 kg/cm^2, 20 psi).

Dual-pressure Switch

NJHA0121S0304

The refrigerant system is protected against excessively high or low pressures by the dual-pressure switch, located on the liquid tank. If the pressure falls out of specifications, the switch opens to interrupt compressor operation.

Pressure Relief Valve

NJHA0121S0302

The refrigerant system is also protected by a pressure relief valve, located in the rear head of the compressor. When the pressure of refrigerant in the system increases to an abnormal level [more than 3,727 kPa (37.3 bar, 38 kg/cm^2, 540 psi)], the release port on the pressure relief valve automatically opens and releases refrigerant into the atmosphere.

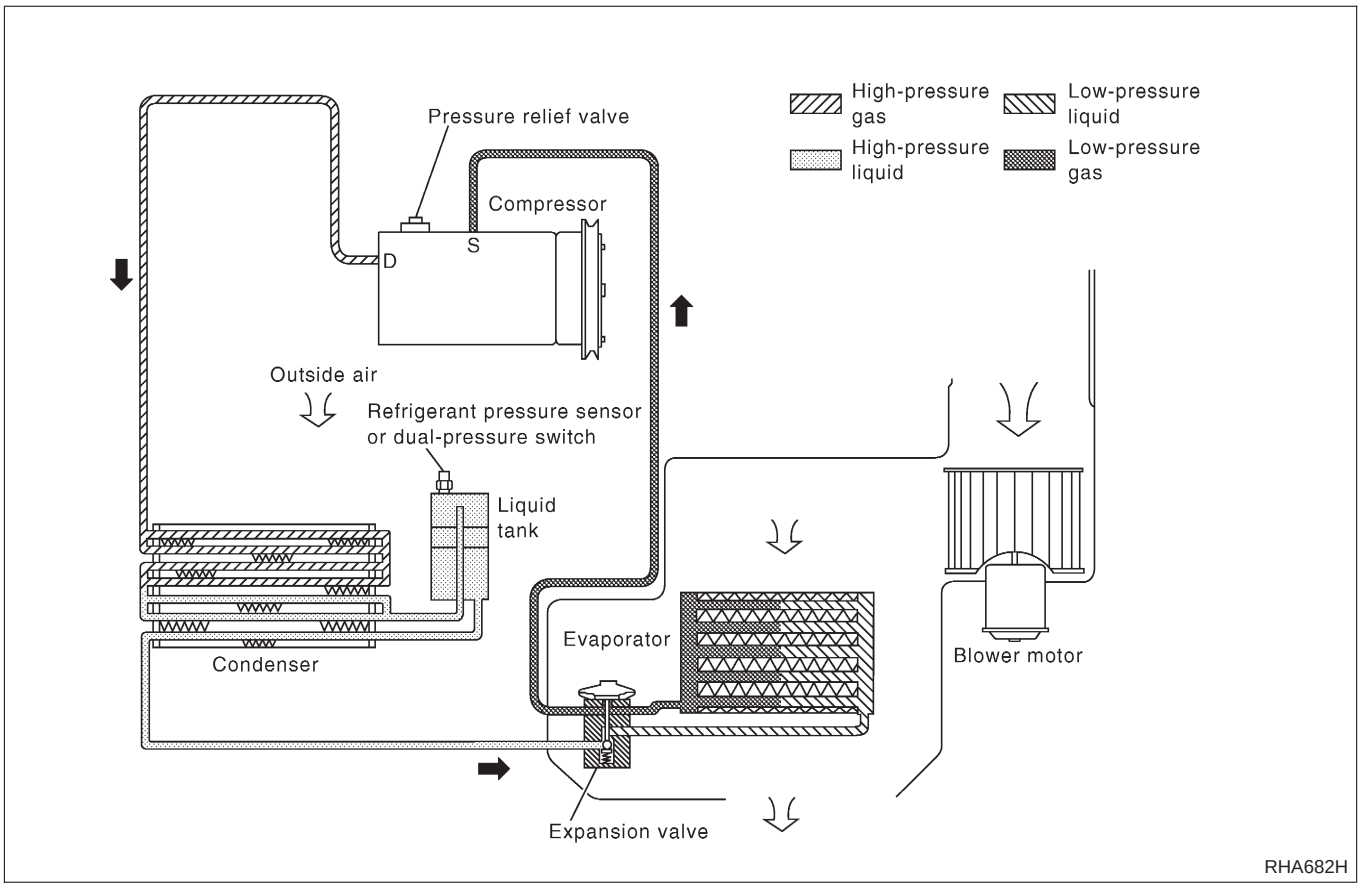

CSV613 Variable Displacement Compressor

GENERAL INFORMATION

NJHA0206

1. The CSV613 compressor differs from previous units. The vent temperatures of the CSV613 compressor do not drop too far below 5°C (41°F) when:
   - evaporator intake air temperature is less than 20°C (68°F)
   - engine is running at speeds less than 1,500 rpm.

   This is because the CSV613 compressor provides a means of “capacity” control.
2. The CSV613 compressor provides refrigerant control under varying conditions. During cold winters, it may not produce high refrigerant pressure discharge (compared to previous units) when used with air conditioning systems.
3. A “clanking” sound may occasionally be heard during refrigerant charge. The sound indicates that the tilt angle of the swash plate has changed and is not a problem.
4. For air conditioning systems with the CSV613 compressor, the clutch remains engaged unless: the system main switch, fan switch or ignition switch is turned OFF. When ambient (outside) temperatures are low or when the amount of refrigerant is insufficient, the clutch is disengaged to protect the compressor.
5. A constant range of suction pressure is maintained when engine speed is greater than a certain value. It normally ranges from 147 to 177 kPa (1.47 to 1.77 bar, 1.5 to 1.8 kg/cm^2, 21 to 26 psi) under varying conditions.
   In previous compressors, however, suction pressure was reduced with increases in engine speed.

DESCRIPTION

General

=NJHA0207

NJHA0207S01

The variable compressor is basically a swash plate type that changes piston stroke in response to the required cooling capacity.
The tilt of the swash plate allows the piston's stroke to change so that refrigerant discharge can be continuously changed from 6.0 to 125 cm^3 (0.366 to 7.628 cu in).

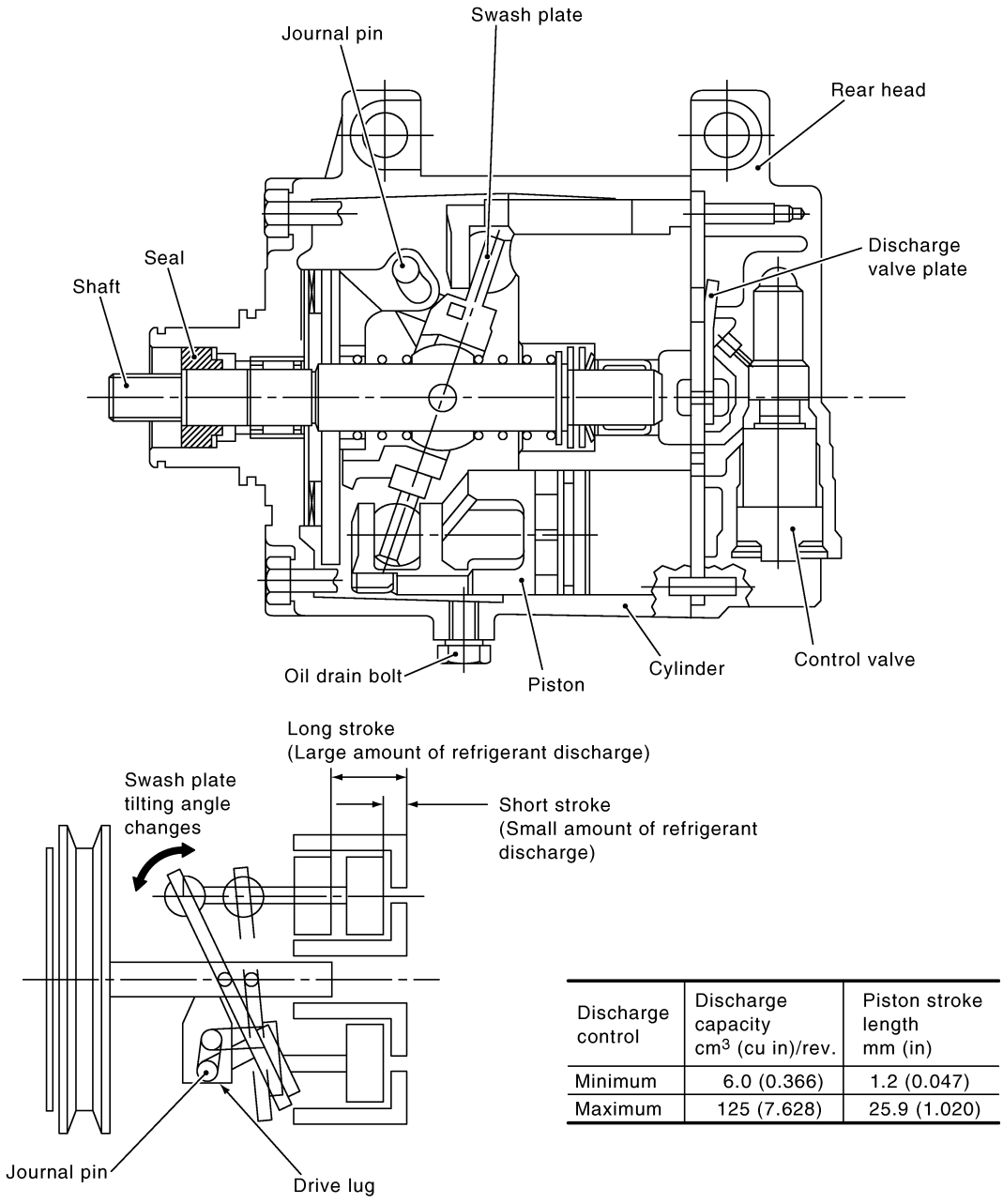

Discharge control	Discharge capacity cm^3 (cu in)/rev.	Piston stroke length mm (in)
Minimum	6.0 (0.366)	1.2 (0.047)
Maximum	125 (7.628)	25.9 (1.020)

RHA854HA

Operation

=NJHA0207S02

1. Operation Control Valve

NJHA0207S0201

Operation control valve is located in the suction port (low-pressure) side, and opens or closes in response to changes in refrigerant suction pressure.
Operation of the valve controls the internal pressure of the crankcase.
The angle of the swash plate is controlled between the crankcase's internal pressure and the piston cylinder pressure.

2. Maximum Cooling

NJHA0207S0202

Refrigerant pressure on the low-pressure side increases with an increase in heat loads.
When this occurs, the control valve's bellows compress to open the low-pressure side valve and close the high-pressure side valve.
This causes the following pressure changes:

- the crankcase's internal pressure to equal the pressure on the low-pressure side;
- the cylinder's internal pressure to be greater than the crankcase's internal pressure.

Under this condition, the swash plate is set to the maximum stroke position.

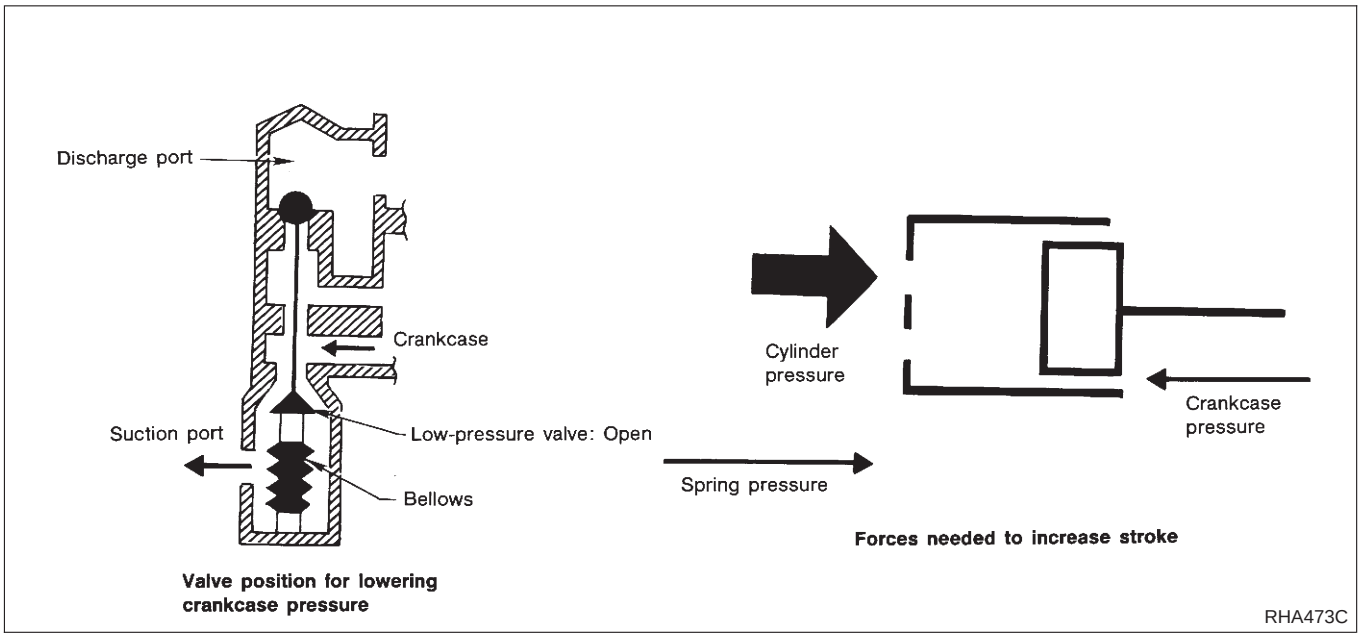

3. Capacity Control

=NJHA0207S0203

- Refrigerant pressure on suction side is low during high speed driving or when ambient or interior temperature is low.
- The bellows expands when refrigerant pressure on the suction pressure side drops below approximately 177 kPa (1.77 bar, 1.8 kg/cm^2, 26 psi).
  Since suction pressure is low, it makes the suction port close and the discharge port open. Thus, crankcase pressure becomes high as high pressure enters the crankcase.
- The force acts around the journal pin near the swash plate, and is generated by the pressure difference before and behind the piston.
  The drive lug and journal pin are located where the piston generates the highest pressure. Piston pressure is between suction pressure Ps and discharge pressure Pd, which is near suction pressure Ps. If crankcase pressure Pc rises due to capacity control, the force around the journal pin makes the swash plate angle decrease and also the piston stroke decrease. In other words, crankcase pressure increase triggers pressure difference between the piston and the crankcase. The pressure difference changes the angle of the swash plate.

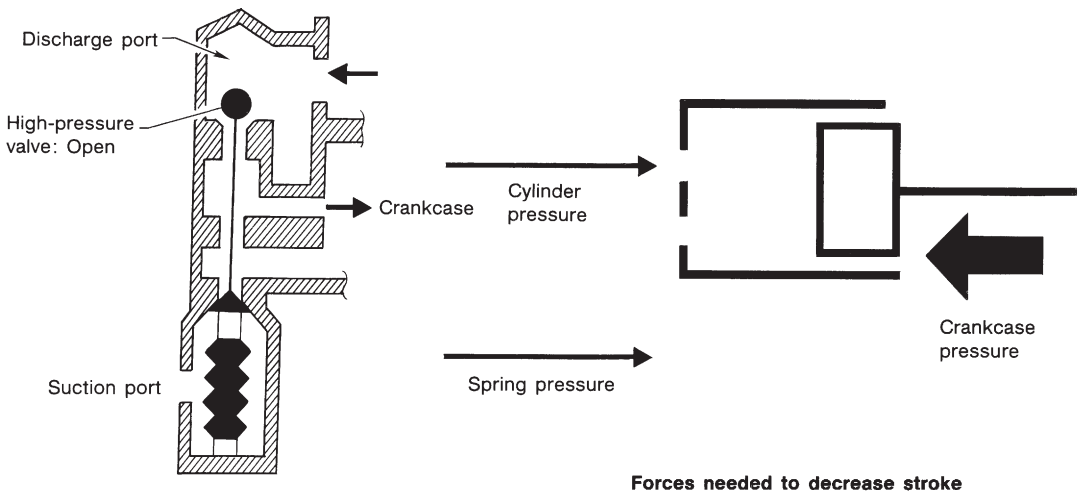

Valve position for raising crankcase pressure

Forces needed to decrease stroke

RHA474C

Component Layout

NJHA0122

SEC. 270•271•272•273

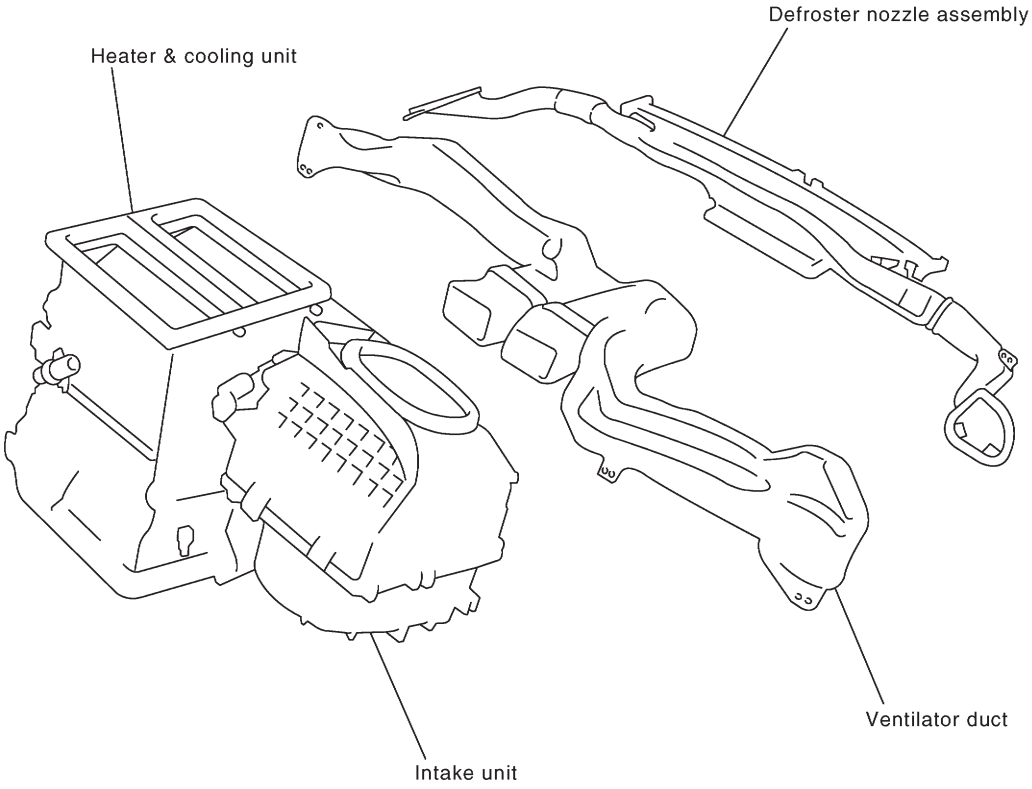

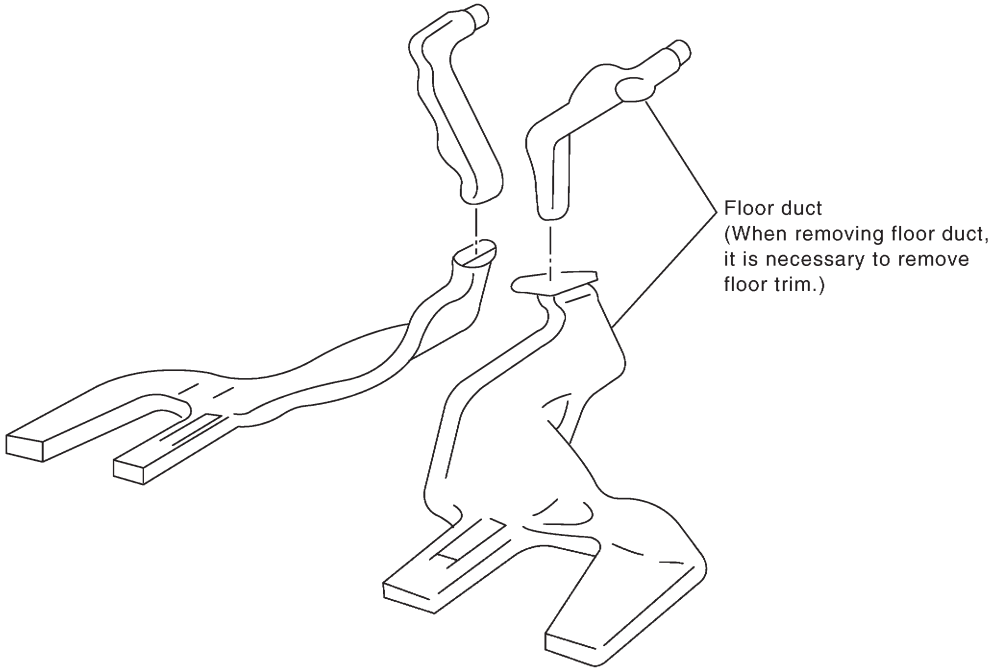

This illustration is for LHD models.
The layout for RHD models is symmetrically opposite.

RHA589H

Control Operation

NJHA0123

For Europe

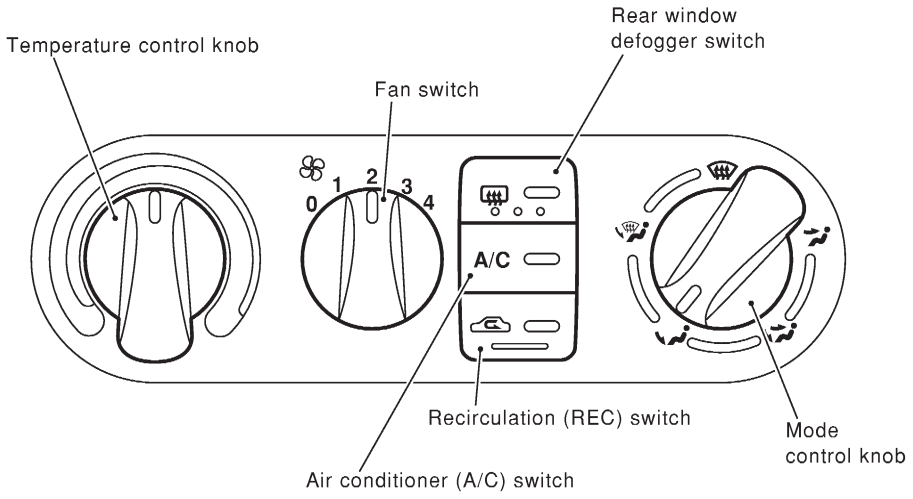

This illustration is for LHD models.
The layout for RHD models is symmetrically opposite.

RHA747H

FAN CONTROL SWITCH

NJHA0123S01

This switch turns the fan ON and OFF, and controls fan speed.

MODE CONTROL KNOB

NJHA0123S02

This knob controls the outlet air flow.

TEMPERATURE CONTROL KNOB

NJHA0123S03

This knob allows you to adjust the temperature of the discharge air.

REAR WINDOW DEFOGGER SWITCH

NJHA0123S07

When illumination is ON, rear window is defogged.

AIR CONDITIONER (A/C) SWITCH

NJHA0123S05

The air conditioner switch controls the A/C system. When the switch is depressed with the fan ON, the compressor will turn ON. The indicator lamp will also light.
The air conditioner cooling function operates only when the engine is running.

RECIRCULATION (REC) SWITCH

NJHA0123S08

Recirculation (REC) position: Interior air is recirculated inside the vehicle. (The indicator lamp will light.)
Fresh (FRE) position: Outlet air is drawn into the passenger compartment. (The indicator lamp will not light.)

Discharge Air Flow

NJHA0124

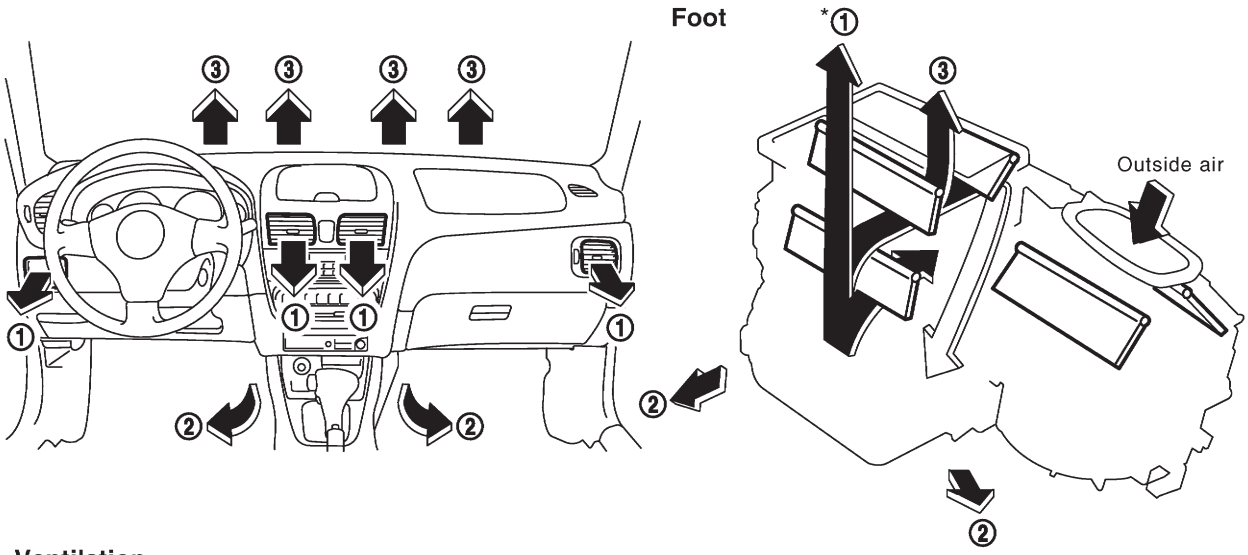

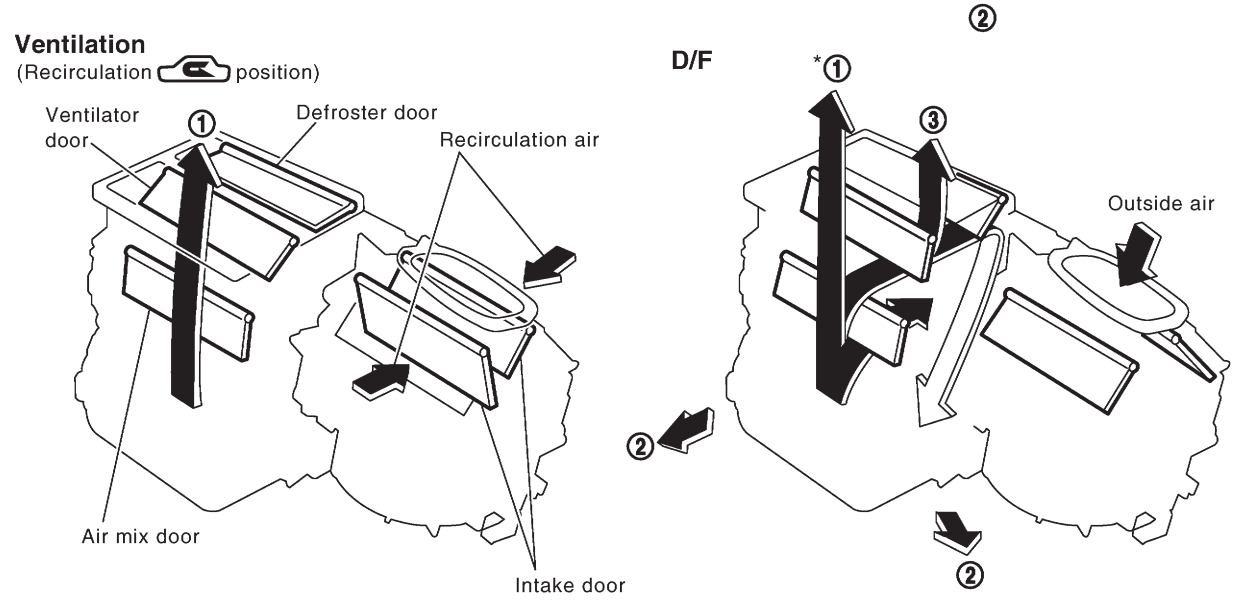

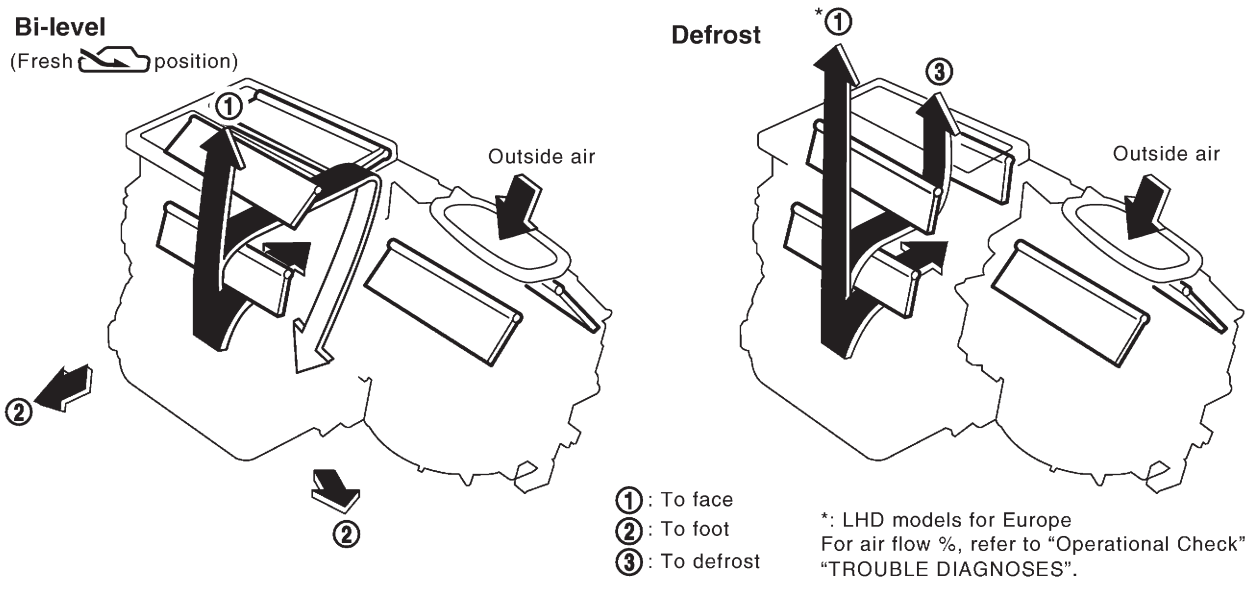

①: To face
②: To foot
③: To defrost

*: LHD models for Europe
For air flow %, refer to "Operational Check", "TROUBLE DIAGNOSES".

RHA748H

System Description

NJHA0125

SWITCHES AND THEIR CONTROL FUNCTIONS

NJHA0125S01

Knob/Switch		Knob/Switch position								Compressor
		A/C	VENT	B/L	FOOT	D/F	DEF	REC	FRE	
A/C		○								ON*1
Mode			○							—
				○						—
					○					—
						○				—
							○			—
Intake								○		—
									○	—

*1: Compressor is operated by ECM.

MAX HOT DOOR FUNCTION FOR SCANDINAVIA AND COLD SPEC MODELS ONLY

NJHA0125S02

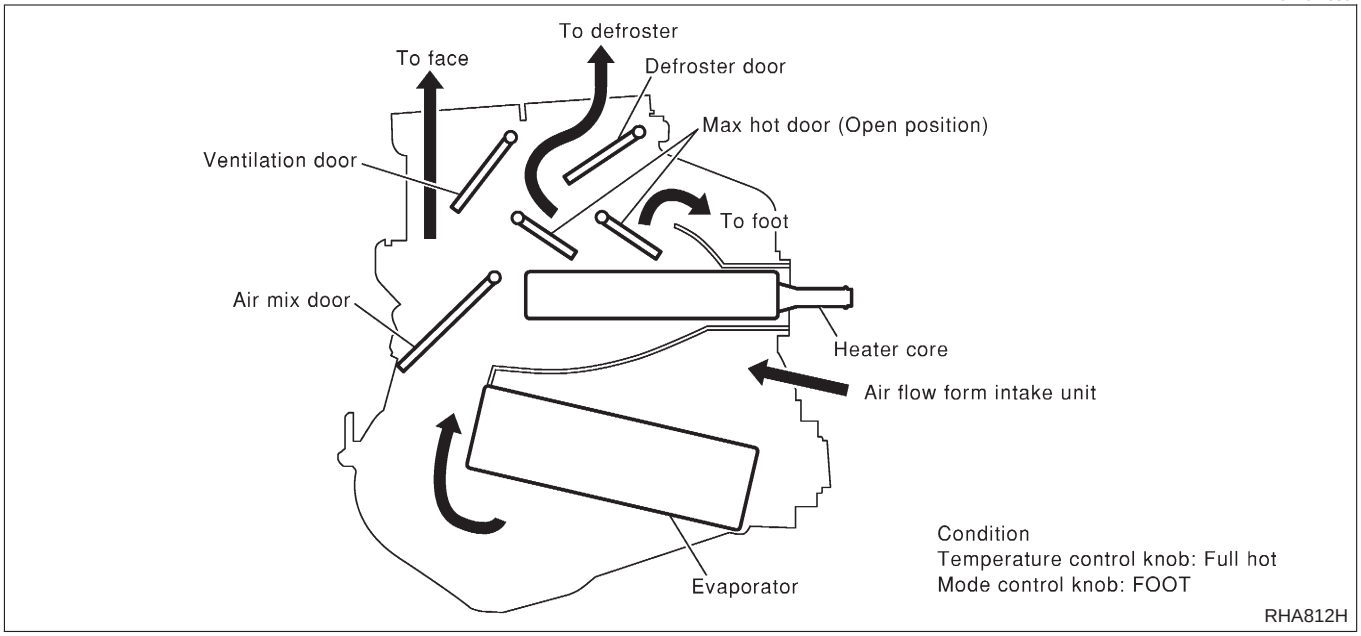

Component Location

NJHA0126

NJHA0126S01

ENGINE COMPARTMENT

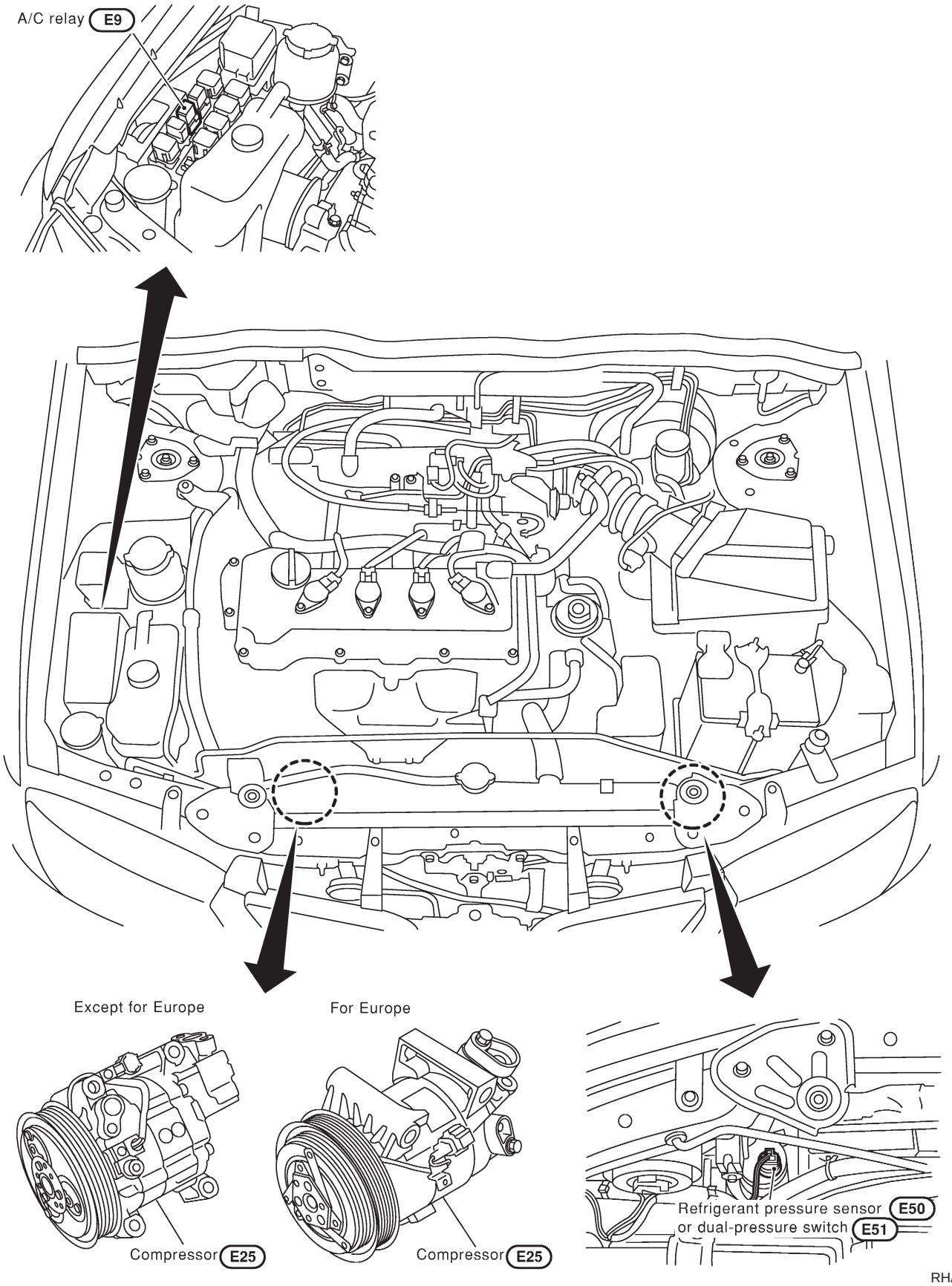

PASSENGER COMPARTMENT

NJHA0126S02

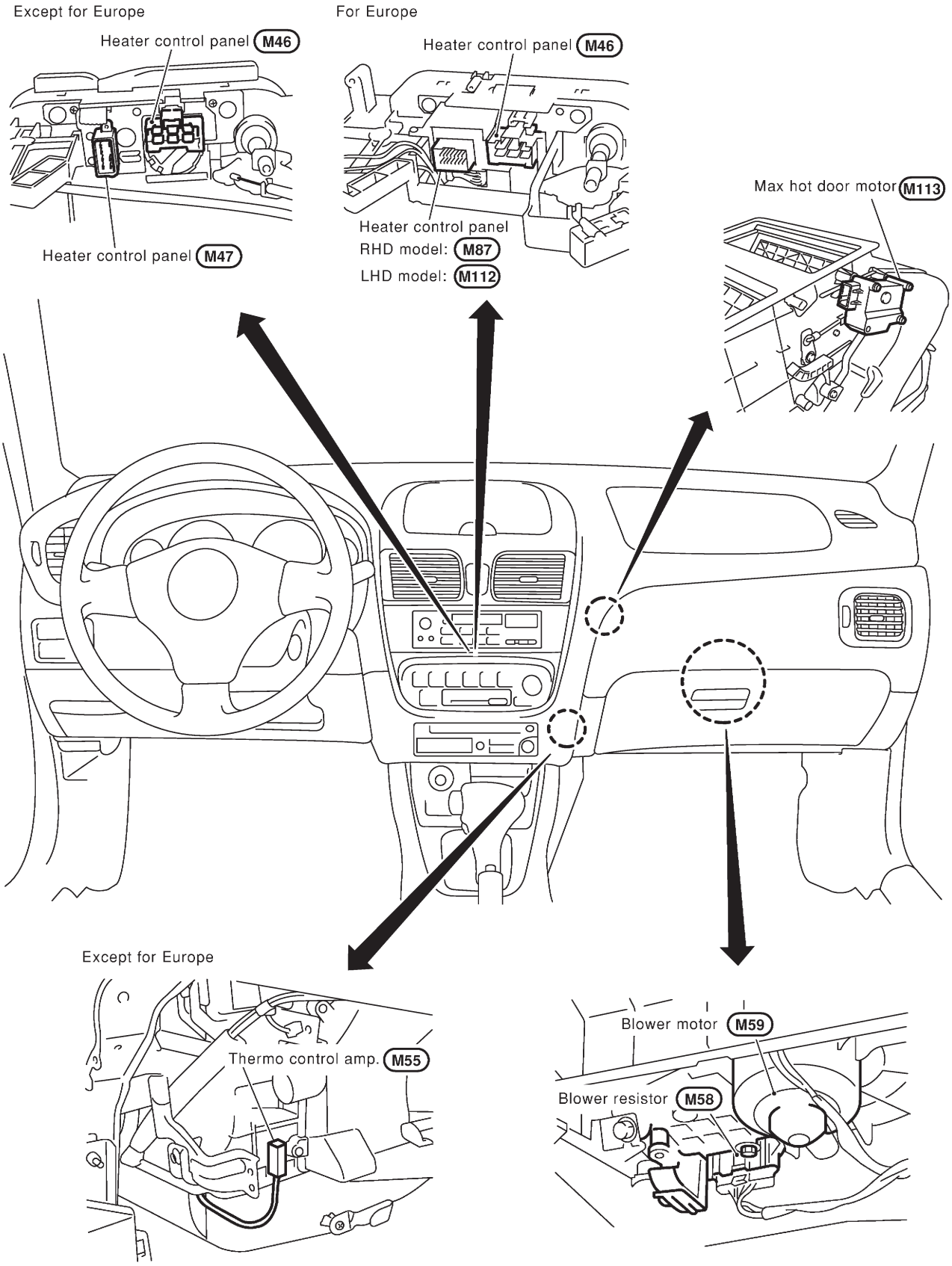

RHA792H

Wiring Diagram — Heater

NJHA0202

4-DOOR SEDAN

NJHA0202S02

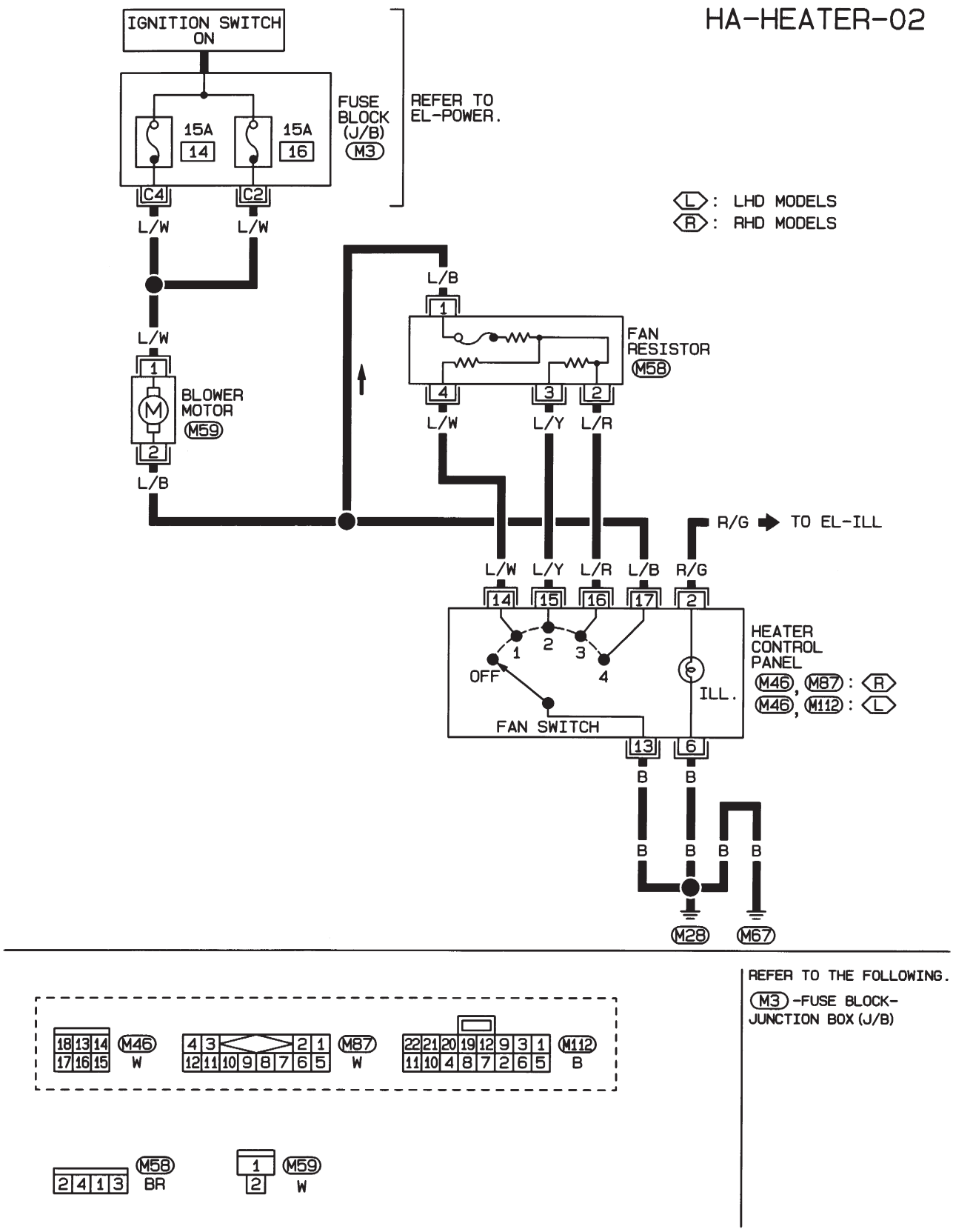

HHA211

HATCHBACK

NJHA0202S03

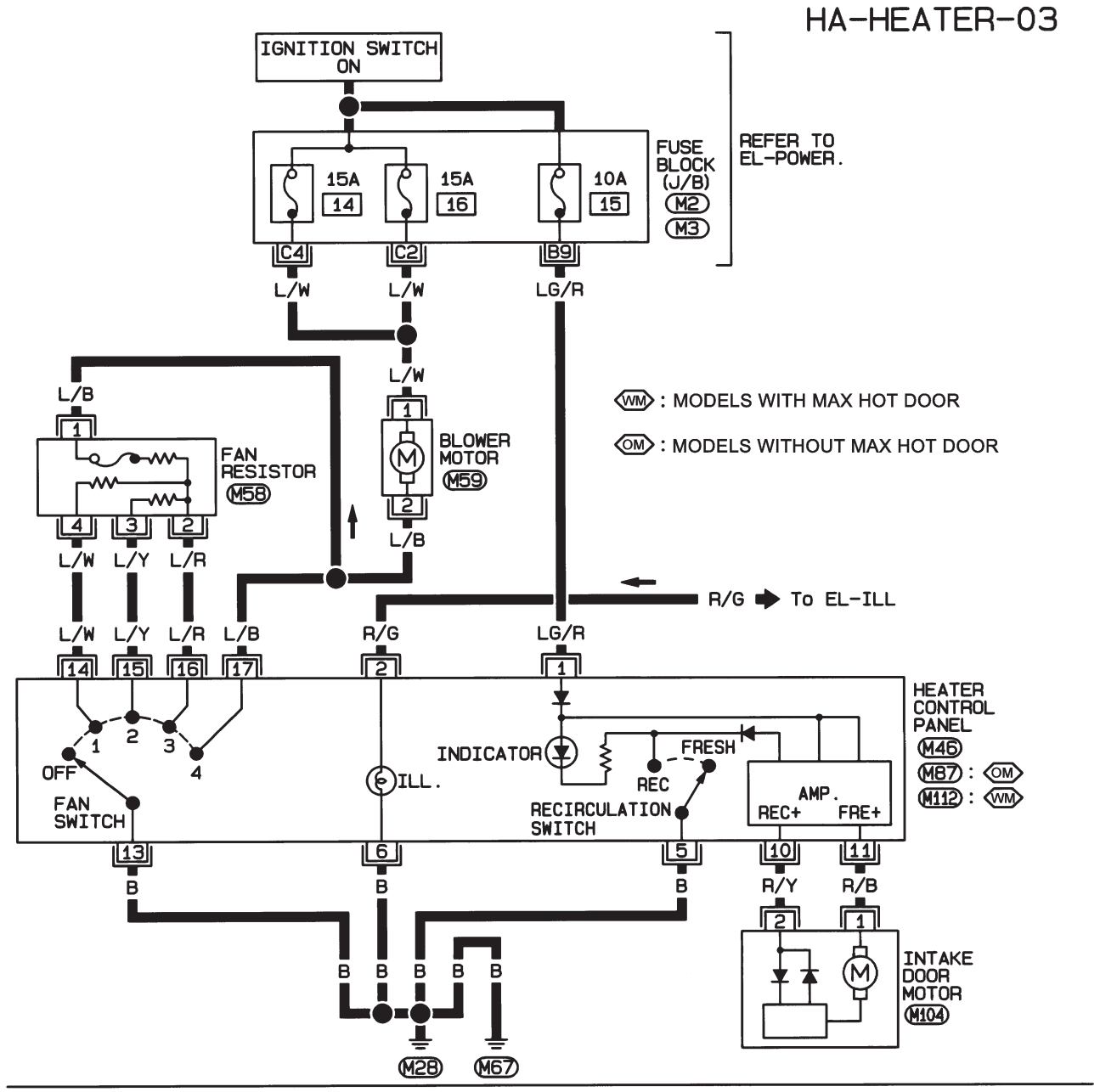

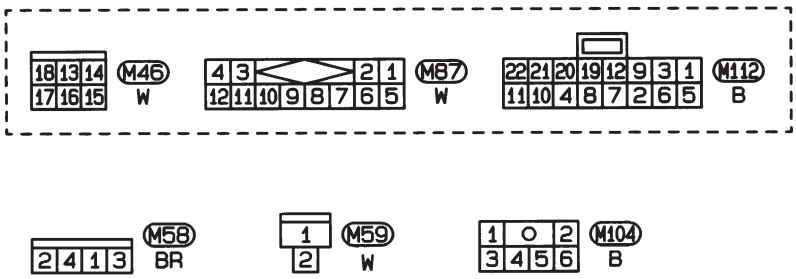

REFER TO THE FOLLOWING.

M2, M3 -FUSE BLOCK-JUNCTION BOX (J/B)

NHA476

TROUBLE DIAGNOSES

Circuit Diagram — Air Conditioner

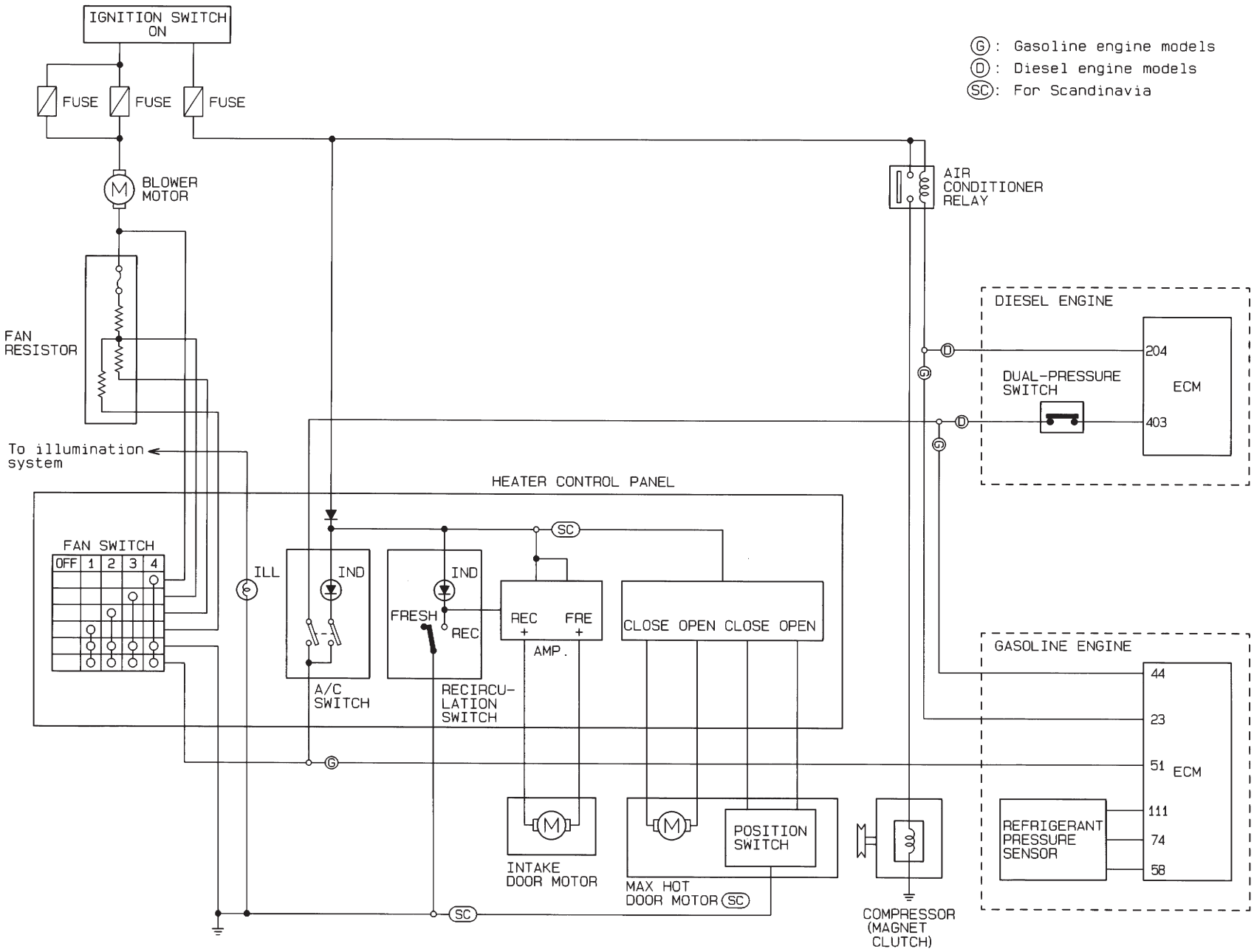

NJHA0127

HHA240

Wiring Diagram — A/C, M —

NJHA0128

MODELS WITH QG ENGINE

NJHA0128S03

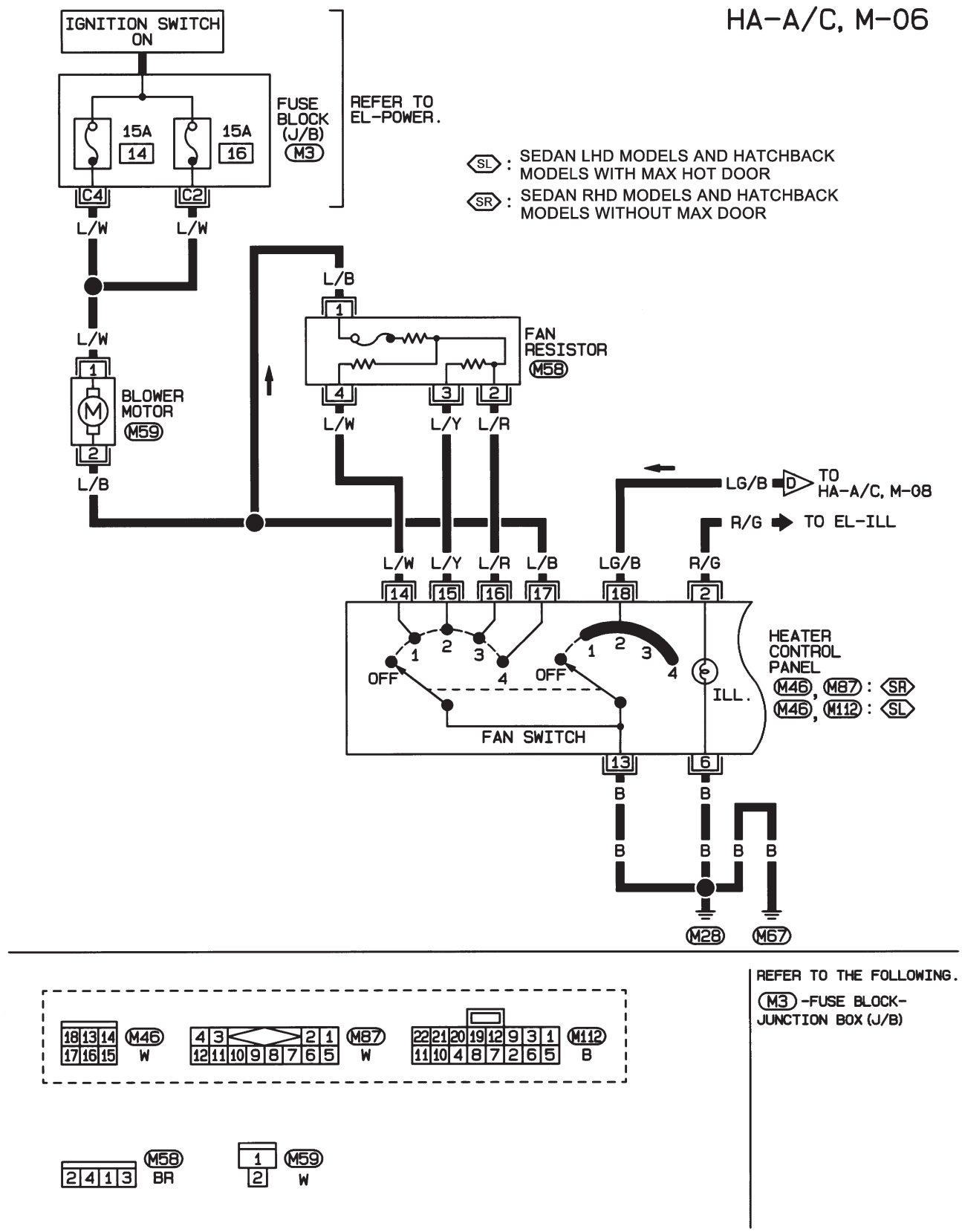

NHA477

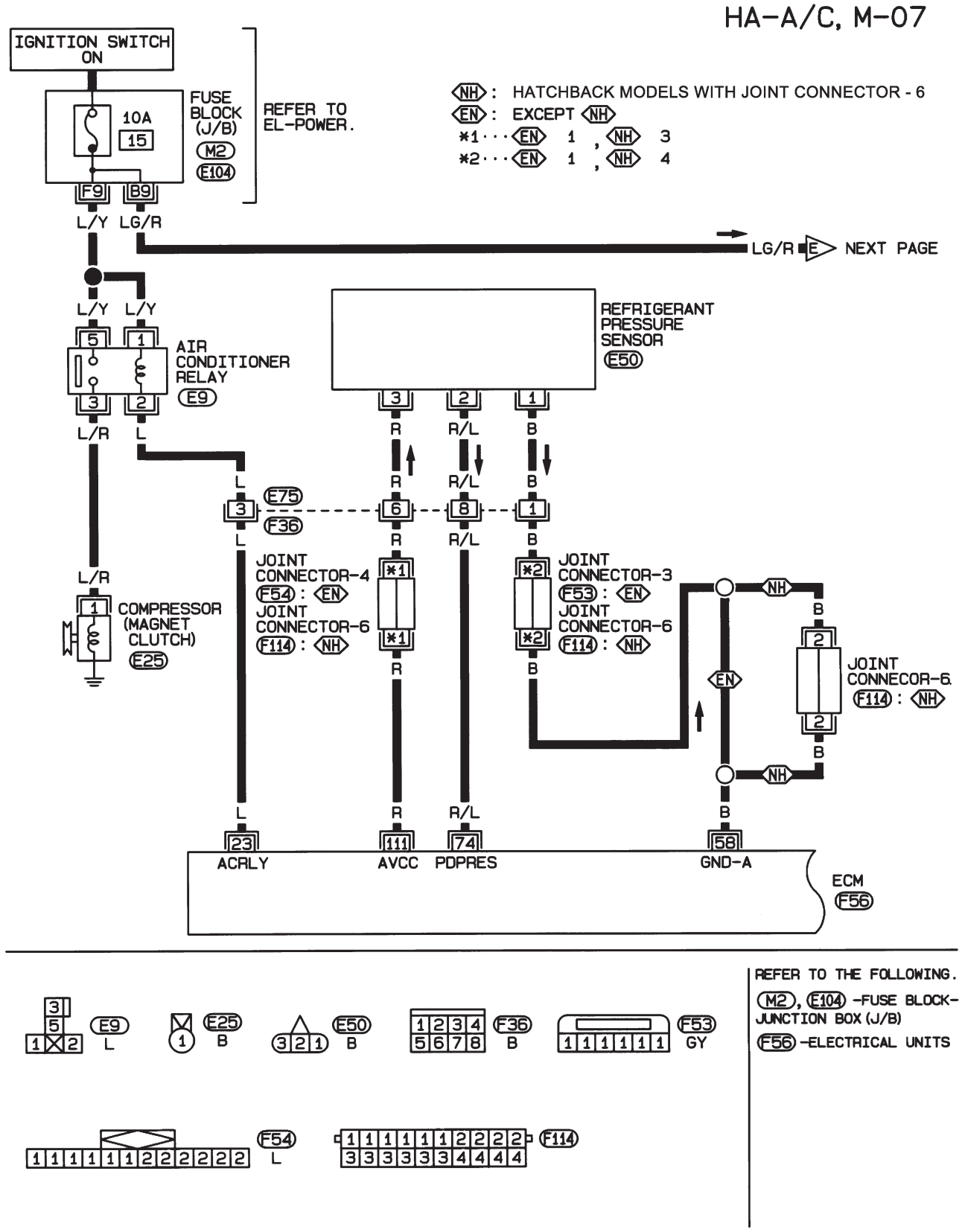
HA-A/C, M-07
IGNITION SWITCH ON
FUSE BLOCK (J/B)
M2
E104
10A
15
F9
B9
REFER TO EL-POWER.
NH: HATCHBACK MODELS WITH JOINT CONNECTOR - 6
EN: EXCEPT NH
*1 ··· EN 1 , NH 3
*2 ··· EN 1 , NH 4
L/Y
LG/R
LG/R E NEXT PAGE
AIR CONDITIONER RELAY
E9
L/R
L
REFRIGERANT PRESSURE SENSOR
E50
R
R/L
B
E75
F36
JOINT CONNECTOR-4
F54 : EN
JOINT CONNECTOR-6
F114 : NH
JOINT CONNECTOR-3
F53 : EN
JOINT CONNECTOR-6
F114 : NH
COMPRESSOR (MAGNET CLUTCH)
E25
JOINT CONNECOR-6
F114 : NH
ACRLY
AVCC
PDPRES
GND-A
ECM
F56
REFER TO THE FOLLOWING.
M2, E104 -FUSE BLOCK-JUNCTION BOX (J/B)
F56 -ELECTRICAL UNITS
E9 L
E25 B
E50 B
F36 B
F53 GY
F54 L
F114

NHA478

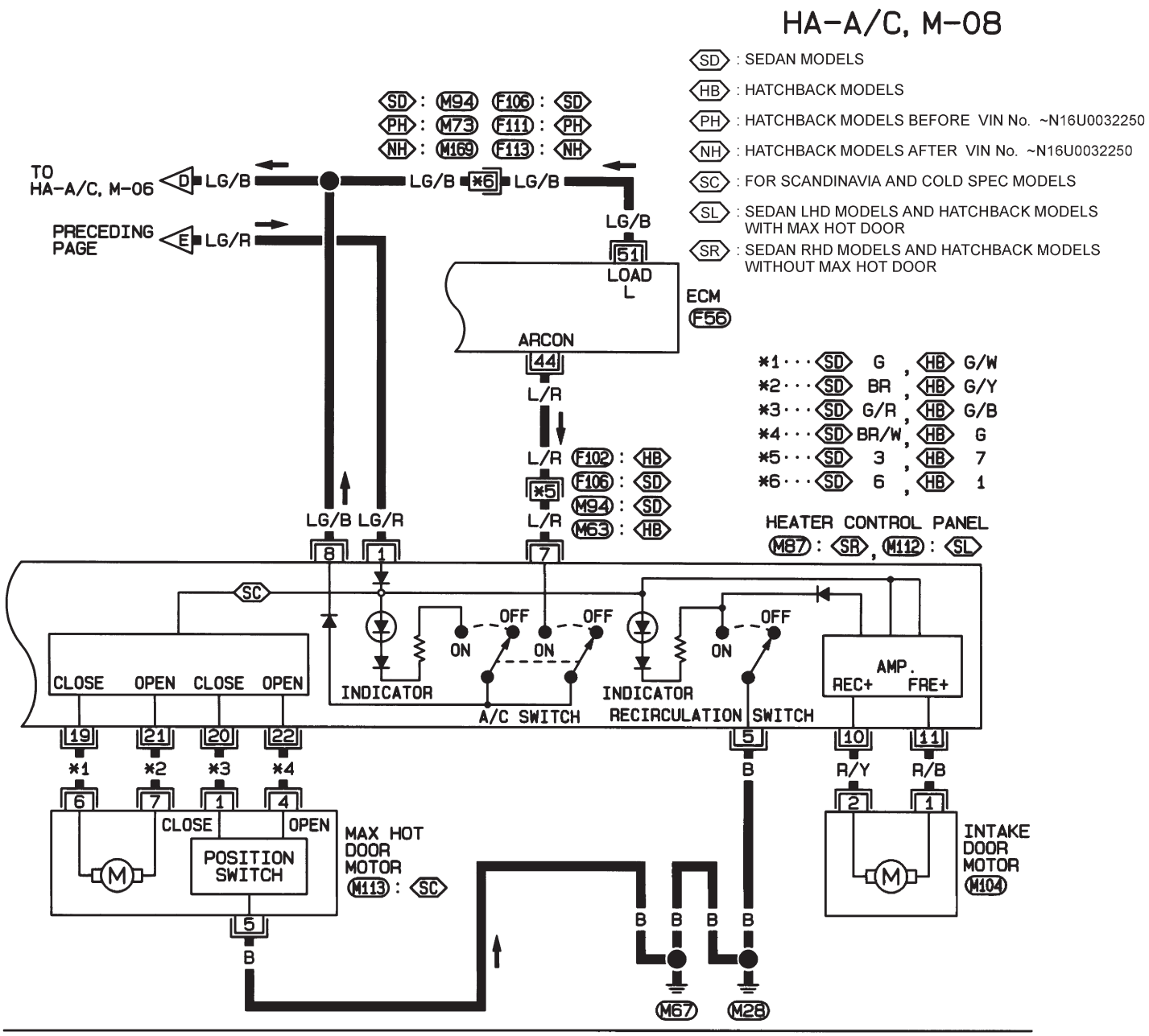
HA-A/C, M-08
SD : SEDAN MODELS
HB : HATCHBACK MODELS
PH : HATCHBACK MODELS BEFORE VIN No. ~N16U0032250
NH : HATCHBACK MODELS AFTER VIN No. ~N16U0032250
SC : FOR SCANDINAVIA AND COLD SPEC MODELS
SL : SEDAN LHD MODELS AND HATCHBACK MODELS WITH MAX HOT DOOR
SR : SEDAN RHD MODELS AND HATCHBACK MODELS WITHOUT MAX HOT DOOR
SD : M94 F106 : SD
PH : M73 F111 : PH
NH : M169 F113 : NH
TO HA-A/C, M-06
D LG/B
LG/B *6 LG/B
PRECEDING PAGE
E LG/R
LG/B
51
LOAD L
ECM F56
ARCON
44
L/R
L/R F102 : HB
*5 F106 : SD
M94 : SD
M63 : HB
LG/B LG/R
L/R
8 1 7
*1 SD G , HB G/W
*2 SD BR , HB G/Y
*3 SD G/R , HB G/B
*4 SD BR/W , HB G
*5 SD 3 , HB 7
*6 SD 6 , HB 1
HEATER CONTROL PANEL
M87 : SR , M112 : SL
SC
OFF
ON
CLOSE OPEN CLOSE OPEN
INDICATOR
A/C SWITCH
INDICATOR
RECIRCULATION SWITCH
AMP.
REC+ FRE+
19 21 20 22
*1 *2 *3 *4
5
B
10 11
R/Y R/B
6 7 1 4
CLOSE OPEN
POSITION SWITCH
MAX HOT DOOR MOTOR
M113 : SC
5
B
B B B B
M67 M28
2 1
INTAKE DOOR MOTOR
M104
M87 W
M104 B
M112 B
M113 W
F102 W , F113 BR
F106 BR
F111 BR
REFER TO THE FOLLOWING.
F56 -ELECTRICAL UNITS

NHA479

MODELS WITH YD ENGINE

NJHA0128S04

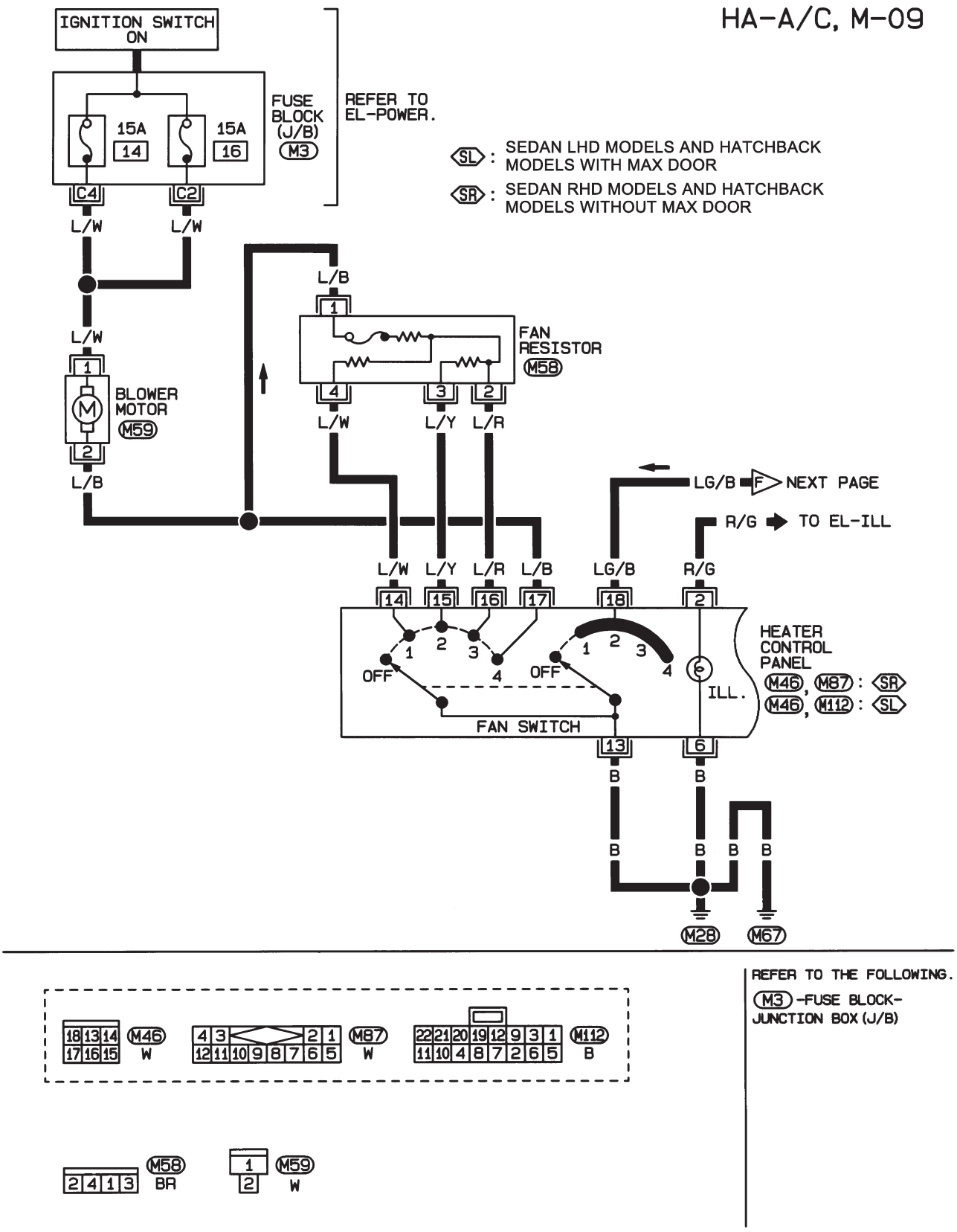

NHA480

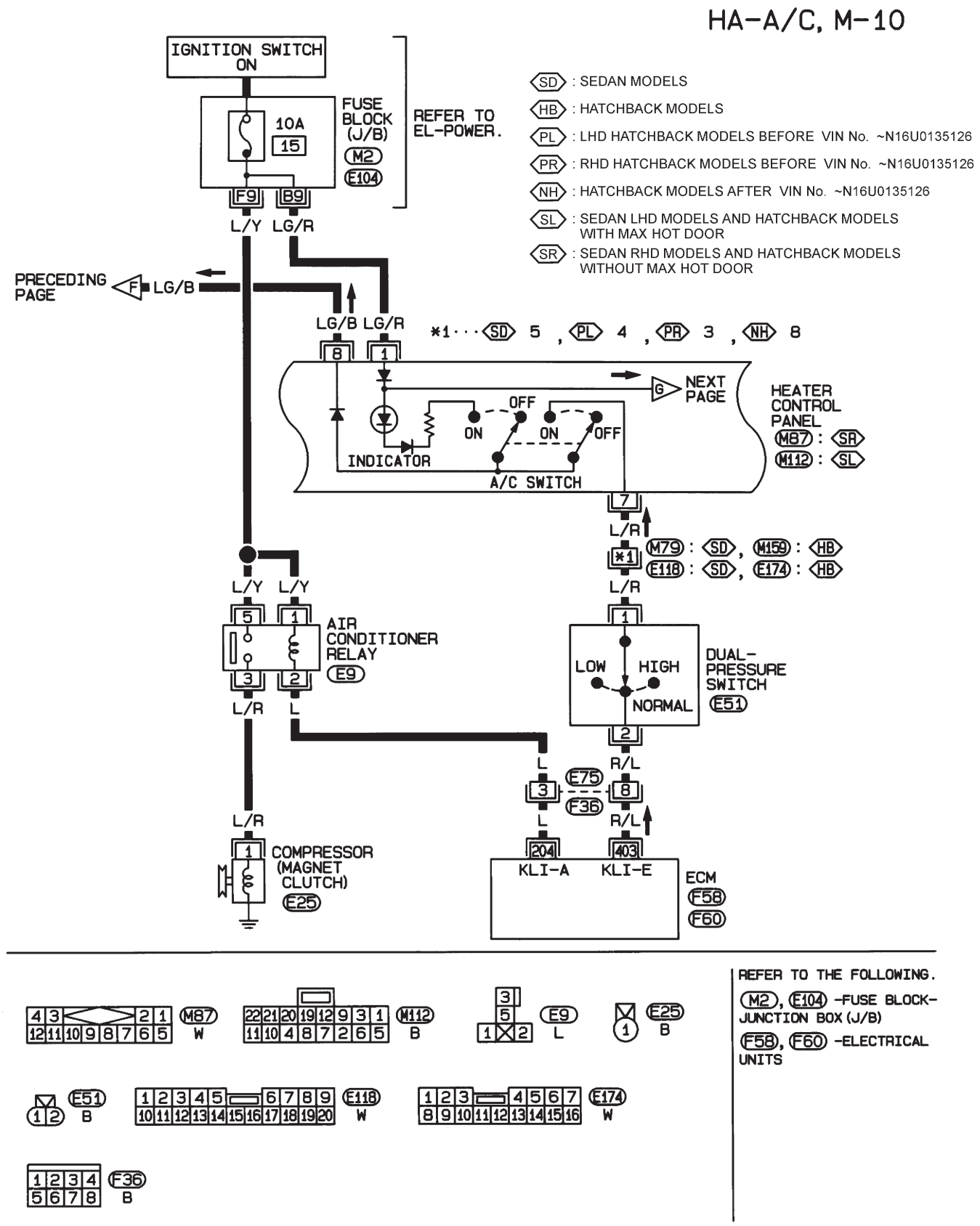
HA-A/C, M-10
IGNITION SWITCH ON
FUSE BLOCK (J/B)
M2
E104
10A
15
REFER TO EL-POWER.
F9
B9
L/Y
LG/R
SD : SEDAN MODELS
HB : HATCHBACK MODELS
PL : LHD HATCHBACK MODELS BEFORE VIN No. ~N16U0135126
PR : RHD HATCHBACK MODELS BEFORE VIN No. ~N16U0135126
NH : HATCHBACK MODELS AFTER VIN No. ~N16U0135126
SL : SEDAN LHD MODELS AND HATCHBACK MODELS WITH MAX HOT DOOR
SR : SEDAN RHD MODELS AND HATCHBACK MODELS WITHOUT MAX HOT DOOR
PRECEDING PAGE
F
LG/B
LG/B LG/R
*1 ··· SD 5 , PL 4 , PR 3 , NH 8
NEXT PAGE
G
OFF
ON
ON
OFF
INDICATOR
A/C SWITCH
HEATER CONTROL PANEL
M87 : SR
M112 : SL
L/R
M79 : SD , M159 : HB
E118 : SD , E174 : HB
L/Y L/Y
AIR CONDITIONER RELAY
E9
L/R
L
LOW
HIGH
NORMAL
DUAL-PRESSURE SWITCH
E51
L
E75
F36
R/L
R/L
L/R
COMPRESSOR (MAGNET CLUTCH)
E25
KLI-A
KLI-E
ECM
F58
F60
M87 W
M112 B
E9 L
E25 B
E51 B
E118 W
E174 W
F36 B
REFER TO THE FOLLOWING.
M2, E104 -FUSE BLOCK-JUNCTION BOX (J/B)
F58, F60 -ELECTRICAL UNITS

NHA481

HA-A/C, M-11

SD : SEDAN MODELS
HB : HATCHBACK MODELS
SL : SEDAN LHD MODELS AND HATCHBACK MODELS WITH MAX HOT DOOR
SR : SEDAN RHD MODELS AND HATCHBACK MODELS WITHOUT MAX HOT DOOR

SC : FOR SCANDINAVIA AND COLD SPEC MODELS

*1 ··· SD G , HB G/W
*2 ··· SD BR , HB G/Y
*3 ··· SD G/R , HB G/B
*4 ··· SD BR/W , HB G

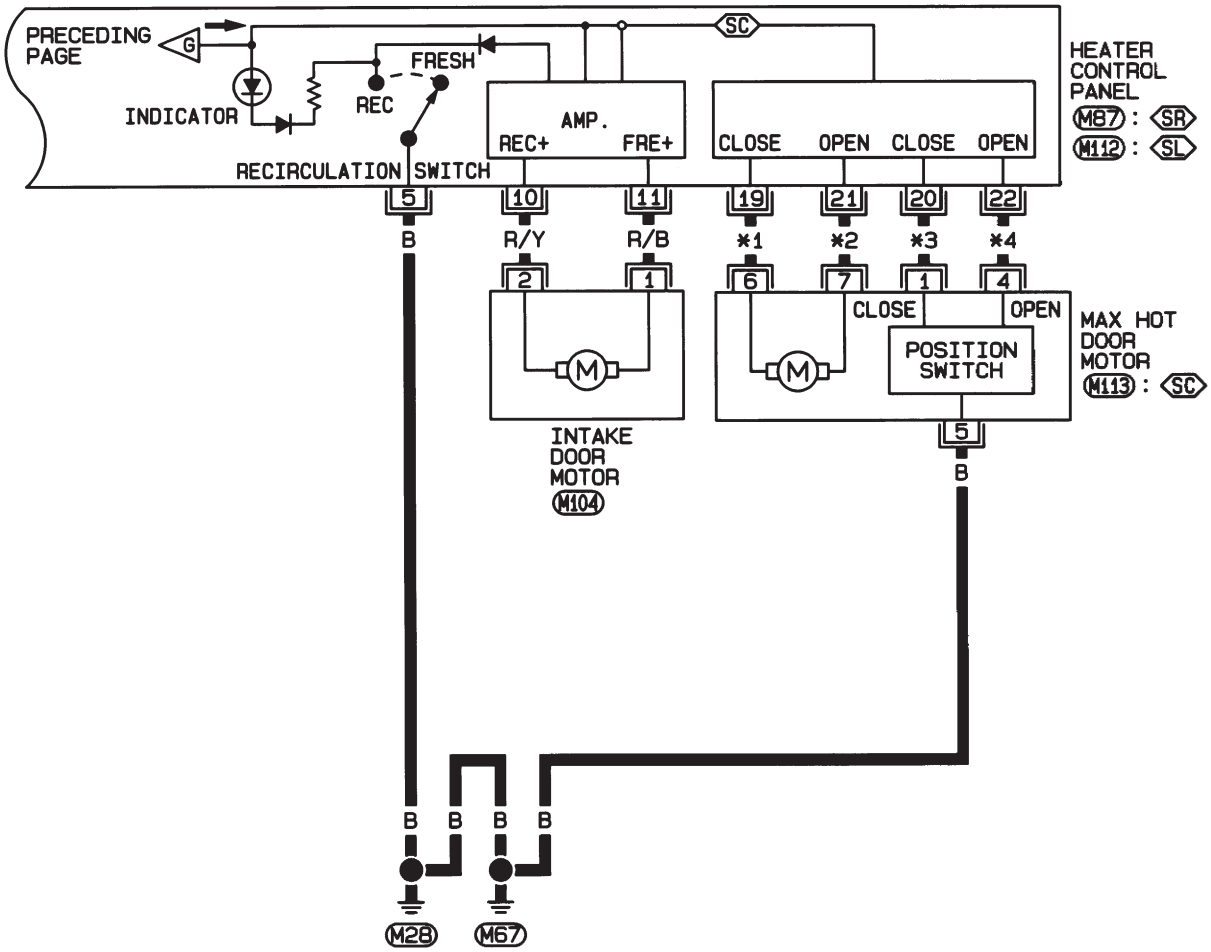

NHA482

How to Perform Trouble Diagnoses for Quick and Accurate Repair

NJHA0129

WORK FLOW

NJHA0129S01

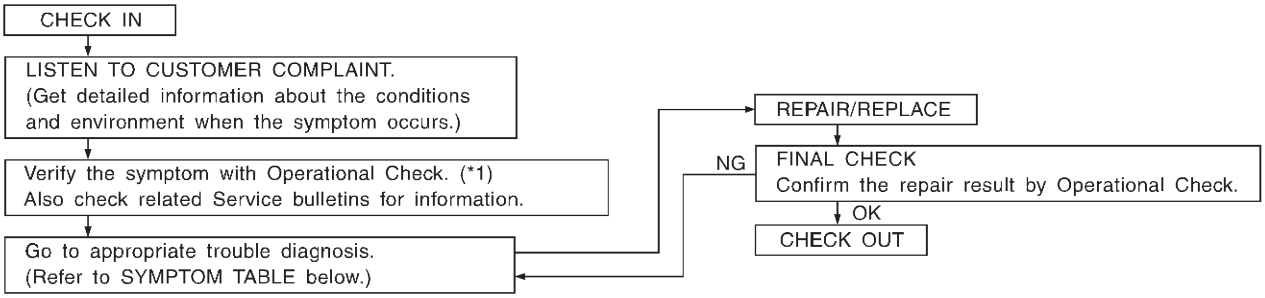

SHA900E

*1: HA-34

SYMPTOM TABLE

NJHA0129S02

Symptom	Reference page	
● Intake door does not change.	● Go to Trouble Diagnosis Procedure for Intake Door.	HA-36
● Air outlet does not change.	● Go to Trouble Diagnosis Procedure for mode door.	HA-40
● Air mix door does not change.	● Go to Trouble Diagnosis Procedure for Air mix door.	HA-42
● Max hot door does not change.	● Go to Trouble Diagnosis Procedure for Max Hot Door.	HA-44
● Blower motor does not rotate at all.	● Go to Trouble Diagnosis Procedure for Blower Motor.	HA-48
● Magnet clutch does not engage when A/C switch and fan switch are ON.	● Go to Trouble Diagnosis Procedure for Magnet Clutch.	HA-55
● Insufficient cooling.	● Go to Trouble Diagnosis Procedure for Insufficient cooling.	HA-68
● Insufficient heating.	● Go to Trouble Diagnosis Procedure for Insufficient heating.	HA-76
● Noise	● Go to Trouble Diagnosis Procedure for Noise.	HA-77

Operational Check

=NJHA0130

The purpose of the operational check is to confirm that the system operates properly.

CONDITIONS:

NJHA0130S01

- **Engine running and at normal operating temperature.**

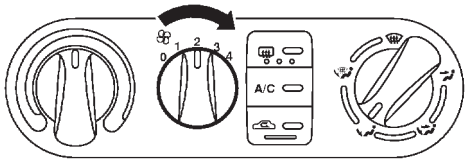

This illustration is for LHD models.
The layout for RHD models is symmetrically opposite.

NHA374

PROCEDURE:

NJHA0130S02

1. Check Blower

NJHA0130S0201

1. Turn fan switch to 1-speed.
   Blower should operate on 1-speed.
2. Then turn fan switch to 2-speed, and continue checking blower speed until all speeds are checked.
3. Leave blower on 4-speed.

If NG, go to trouble diagnosis procedure for blower motor (HA-48).
If OK, continue with next check.

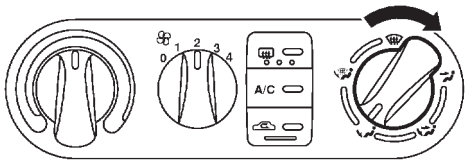

This illustration is for LHD models.
The layout for RHD models is symmetrically opposite.

NHA375

2. Check Discharge Air

NJHA0130S0202

1. Turn mode control knob to each position.

Discharge air flow

Mode door position	Air outlet/distribution		
	Face	Foot	Defroster
	100%	–	–
	60%	40%	–
	– (15%)	80% (65%)	20%
	– (15%)	65% (55%)	35% (30%)
	– (15%)	–	100% (85%)

( ): LHD models for Europe, face air from SIDE VENT only

RHA654FK

2. Confirm that discharge air comes out according to the air distribution table at left.

Refer to “Discharge Air Flow”, HA-20.
If NG, go to trouble diagnosis procedure for mode door motor (HA-40).
If OK, continue with next check.

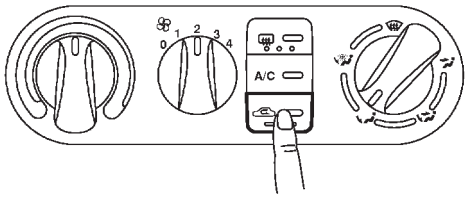

This illustration is for LHD models.
The layout for RHD models is symmetrically opposite.

NHA377

3. Check Recirculation

NJHA0130S0203

1. Press the Recirculation (REC) switch. Recirculation indicator should illuminate.
2. Listen for intake door position change.

If NG, go to trouble diagnosis procedure for intake door (HA-36).
If OK, continue with next check.

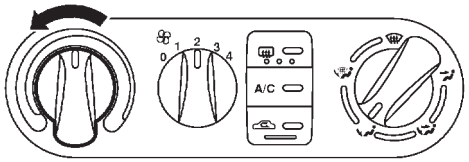

This illustration is for LHD models.
The layout for RHD models is symmetrically opposite.

NHA378

4. Check Temperature Decrease

NJHA0130S0204

1. Turn the temperature control knob to full cold.
2. Check for cold air at discharge air outlets.

If NG, go to trouble diagnosis procedure for insufficient cooling (HA-68).
If OK, continue with next check.

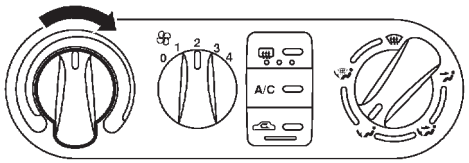

This illustration is for LHD models.
The layout for RHD models is symmetrically opposite.

NHA379

5. Check Temperature Increase

NJHA0130S0205

1. Turn the temperature control knob to full hot.
2. Check for hot air at discharge air outlets.

If NG, go to trouble diagnosis procedure for insufficient heating (HA-76).

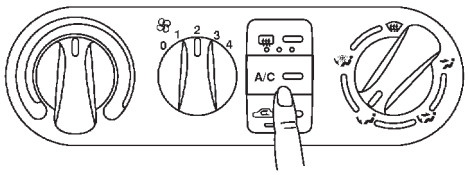

This illustration is for LHD models.
The layout for RHD models is symmetrically opposite.

NHA380

6. Check Air Conditioner Switch

NJHA0130S0206

Turn the fan control switch to the desired (1 to 4 speed) position and push the A/C switch to turn ON the air conditioner.
The indicator lamp should come on when air conditioner is ON.
If NG, go to trouble diagnosis procedure for magnet clutch (HA-55).

Intake Door

TROUBLE DIAGNOSIS PROCEDURE FOR INTAKE DOOR

=NJHA0133

SYMPTOM:

- **Intake door does not change.**

INSPECTION FLOW

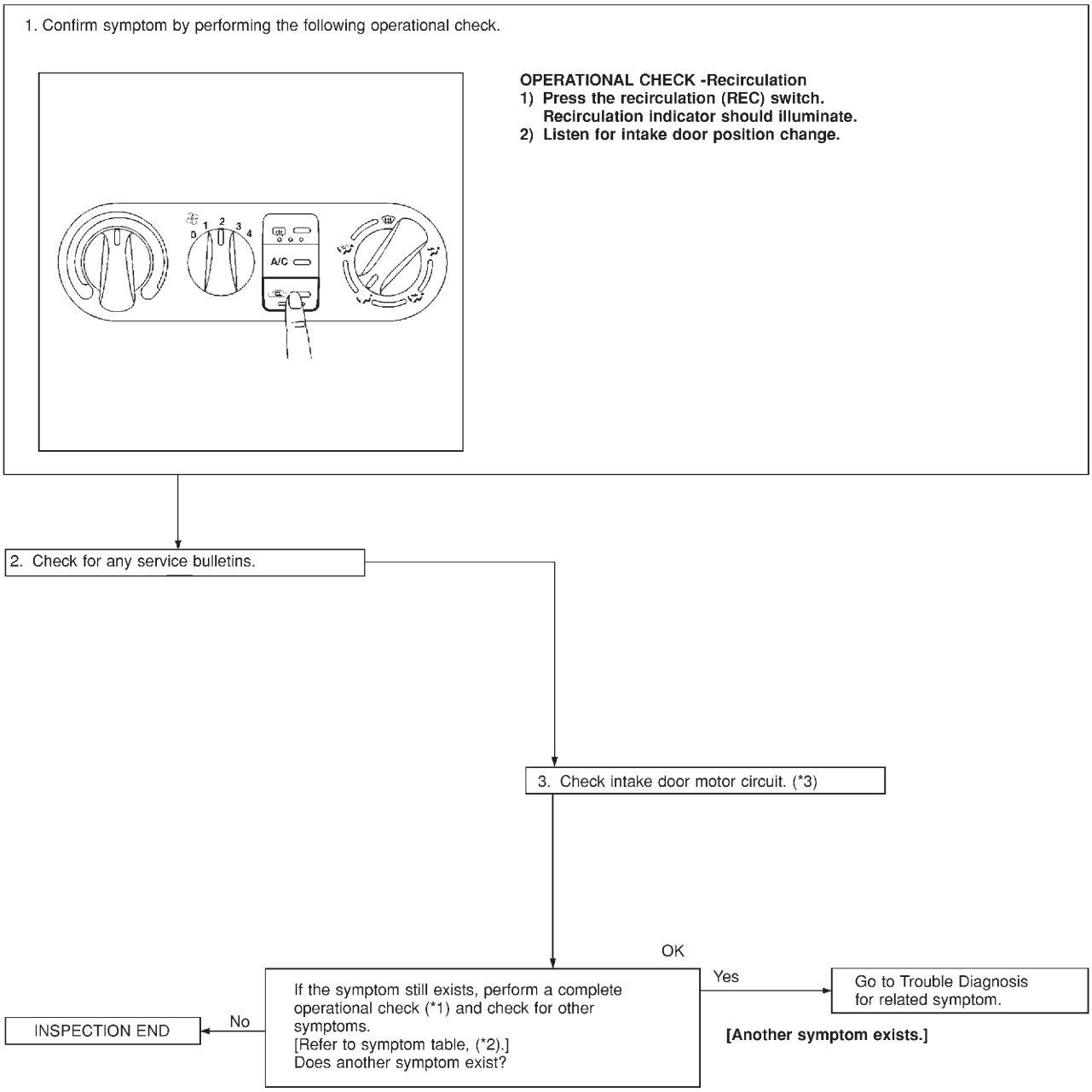

NHA381

*1: HA-34 *2: HA-33 *3: HA-37

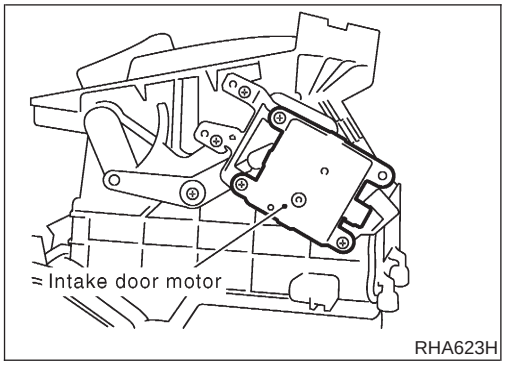

RHA623H

COMPONENT DESCRIPTION

NJHA0209

Intake Door Motor

NJHA0209S01

The intake door motor is attached to the intake unit. It rotates so that air is drawn from inlets set by the heater control panel. Motor rotation is conveyed to a lever which activates the intake door.

DIAGNOSTIC PROCEDURE FOR INTAKE DOOR MOTOR CIRCUIT

NJHA0210

1	CHECK POWER SUPPLY FOR HEATER CONTROL PANEL
Do approx. 12 volts exist between heater control panel harness terminal No. 1 and body ground?	

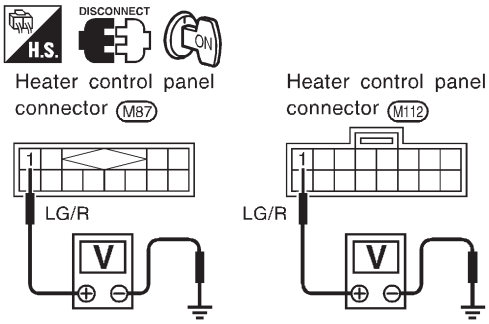

NHA483

Yes or No

Yes	▶	GO TO 2.
No	▶	Check 10A (No. 15) fuse at fuse block. Refer to Sedan: EL-11 (QG), EL-19 (YD), Hatchback: EL-28, "Wiring Diagram — POWER —".

2	CHECK RECIRCULATION (REC) SWITCH
Refer to HA-39.	

OK or NG

OK	▶	GO TO 3.
NG	▶	Replace recirculation (REC) switch.

3	CHECK GROUND CIRCUIT FOR RECIRCULATION (REC) SWITCH

Check circuit continuity between heater control panel harness terminal No. 5 and body ground.

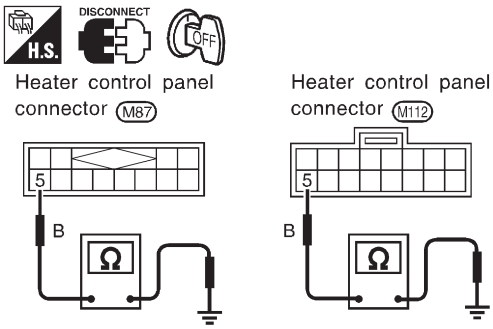

Continuity should exist.
If OK, check harness for short.

OK or NG

OK	▶	GO TO 4.
Ng	▶	Repair harness or connector.

4	CHECK POWER SUPPLY FOR INTAKE DOOR MOTOR

Do approx. 12 volts exist between intake door motor harness terminal No. 1, 2 and body ground?

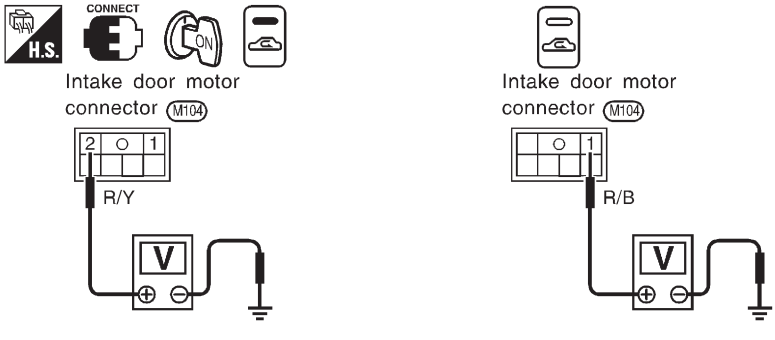

Yes or No

Yes	▶	Replace intake door motor.
No	▶	GO TO 5.

5	CHECK CIRCUIT CONTINUITY BETWEEN HEATER CONTROL PANEL AND INTAKE DOOR MOTOR

Check circuit continuity between heater control panel harness terminal No. 10 (11) and intake door motor harness terminal No. 2 (1)

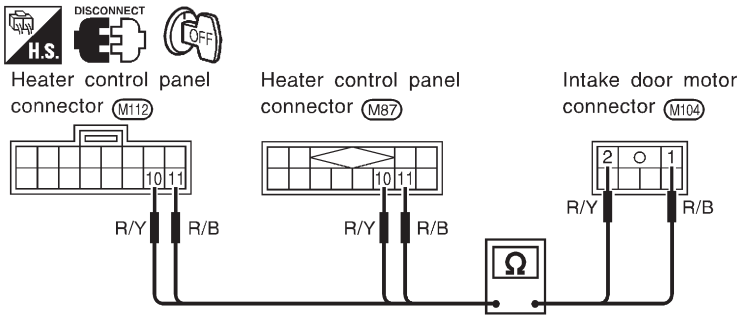

NHA485

Continuity should exist.
If OK, check harness for short.

OK or NG

OK	▶	Replace heater control panel.
NG	▶	Repair harness or connector.

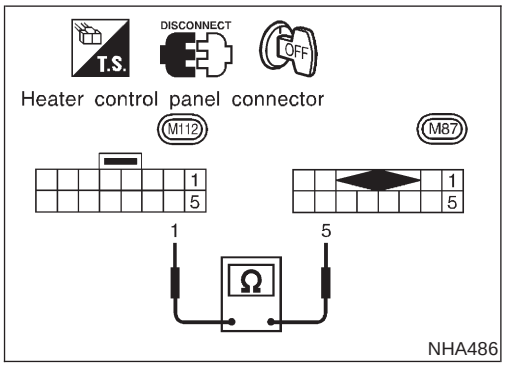

NHA486

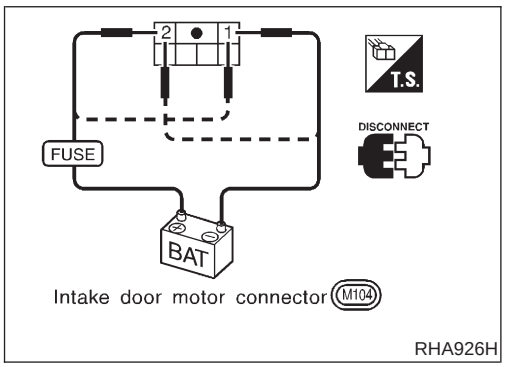

RHA926H

ELECTRICAL COMPONENT INSPECTION

NJHA0216

Recirculation (REC) Switch

NJHA0216S01

Check continuity between terminals.

Terminals	REC switch	Continuity
1 - 5	ON	Yes
	OFF	No

Intake Door Motor

NJHA0216S02

Supply 12V direct current to intake door motor terminal No. 1 and 2.

12V direct current supply terminals		Intake door position
+	–	
1	2	FRE
2	1	REC

Mode Door

TROUBLE DIAGNOSIS PROCEDURE FOR MODE DOOR

=NJHA0137

SYMPTOM:

- **Air outlet does not change.**

INSPECTION FLOW

1. Confirm symptom by performing the following operation.

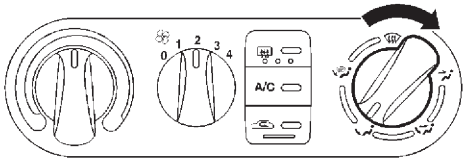

OPERATIONAL CHECK - Mode door

a. Turn the mode control knob to each position.
b. Confirm that discharge air comes out according to the distribution table at left.
Refer to "Discharge Air Flow", (*1)

Discharge air flow

Mode control knob	Air outlet/distribution		
	Face	Foot	Defroster
	100%	–	–
	60%	40%	–
	– (15%)	80% (65%)	20%
	– (15%)	65% (55%)	35% (30%)
	– (15%)	–	100%

( ): LHD models face air from SIDE VENT only

2. Check for any service bulletins.

3. Check mode door control cable. (*3)

OK

4. If the symptom still exists, perform a complete operational check (*2) and check for other symptoms. [Refer to symptom table, (*4).] Does another symptom exist?

Yes → Go to Trouble Diagnosis for related symptom. **[Another symptom exists.]**

No → INSPECTION END

NHA382

*1: HA-20
*2: HA-34
*3: HA-41
*4: HA-33

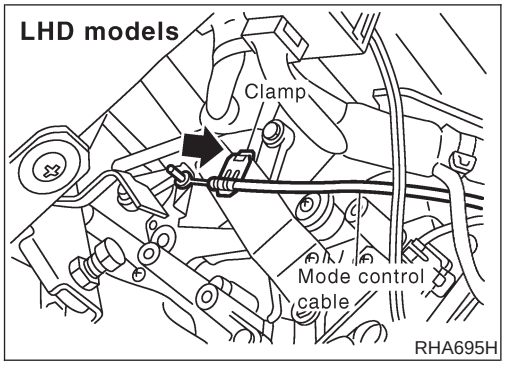

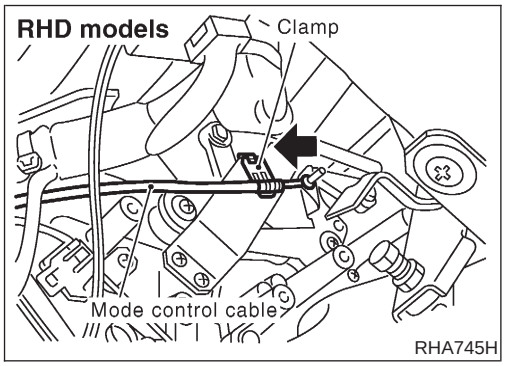

CONTROL LINKAGE ADJUSTMENT

NJHA0139

Mode Door

NJHA0139S01

1. Turn the mode control knob to VENT position.
2. Move side link by hand and hold mode door in VENT position.
3. Pull on the cable cover in the direction of the arrow, then clamp it.

After positioning control cable, check that it operates properly.

Air Mix Door

TROUBLE DIAGNOSIS PROCEDURE FOR AIR MIX DOOR

=NJHA0140

SYMPTOM:

- **Air mix door does not change.**

INSPECTION FLOW

1. Confirm symptom by performing the following operational check.

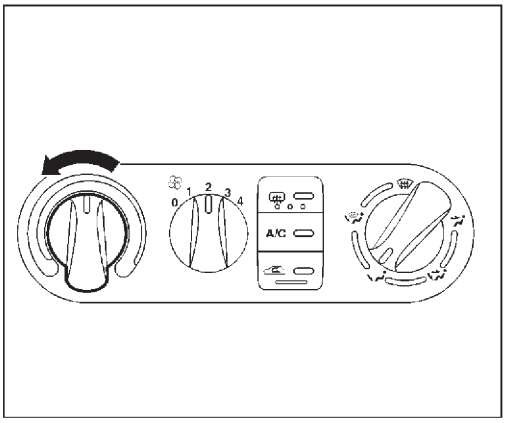

OPERATIONAL CHECK - Temperature decrease and Increase

1. Check Temperature Decrease
1) Turn temperature control lever to full cold.
2) Check for cold air at discharge air outlets.

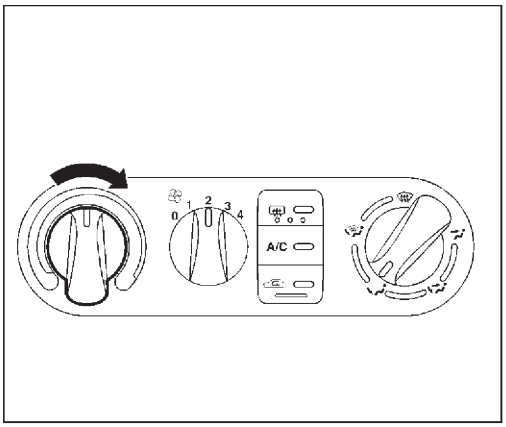

2. Check Temperature Increase
1) Turn temperature control lever to fll hot.
2) Check for hot air at discharge air outlets.

If OK (symptom cannot be duplicated). Perform complete operational check. (*3)
If NG (symptom is confirmed), continue with STEP-2 following.

2. Check for any service bulletins.

3. Check air mix door. (*1)

OK

If the symptom still exists, perform a complete operational check (*2) and check for other symptoms.
[Refer to symptom table, (*4).]
Does another symptom exist?

Yes → Go to Trouble Diagnosis for related symptom.

[Another symptom exists.]

No → INSPECTION END

NHA383

*1: HA-43
*2: HA-34
*3: HA-34
*4: HA-33

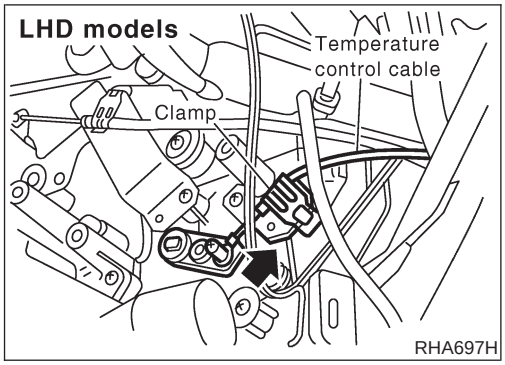

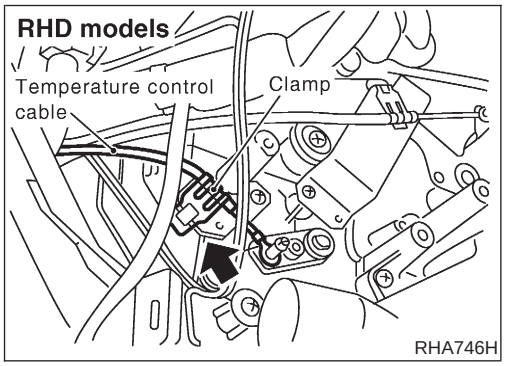

CONTROL LINKAGE ADJUSTMENT

NJHA0143

Air Mix Door

NJHA0143S01

1. Turn the temperature control knob to full hot position.
2. Move air mix door lever by hand and hold it at the full hot position.
3. Pull on the cable cover in the direction of the arrow, then clamp it.

After positioning control cable, check that it operates properly.

Max Hot Door (For Scandinavia and Cold Spec Models)

TROUBLE DIAGNOSIS FOR MAX HOT DOOR

=NJHA0223

SYMPTOM:

- **Max hot door does not change.**

INSPECTION FLOW

1. Confirm symptom by performing the following operational check.

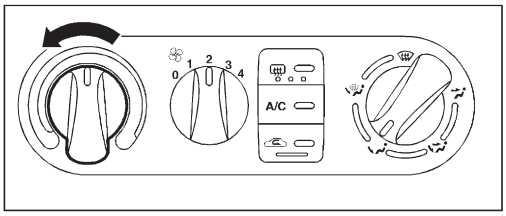

OPERATIONAL CHECK – Max hot door operation

1. Check closed position
1) Turn temperature control dial to full cold.
2) Turn mode control dial to VENT, B/L or DEF.
3) Check for cold air at discharge air outlets.

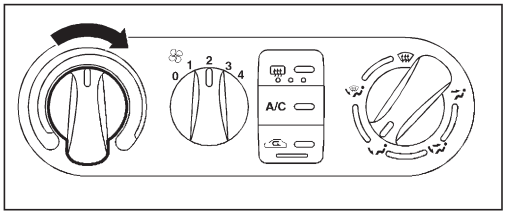

2. Check open position
1) Turn temperature control dial to full hot.
2) Turn mode control dial to FOOT or D/F.
3) Check for hot air at discharge air outlets.

If OK (symptom cannot be duplicated). Perform complete operational check. (*3)
If NG (symptom is confirmed), continue with STEP-2 following.

2. Check for any service bulletins.

3. Check max hot door circuit. (*1)

OK

If the symptom still exist, perform a complete operational check (*2) and check for other symptoms.
[Refer to symptom table, (*4).]
Does another symptom exist?

No → INSPECTION END

Yes → Go to Trouble Diagnosis for related symptom.
[Another symptom exists.]

RHA915H

*1: HA-45
*2: HA-34
*3: HA-34
*4: HA-33

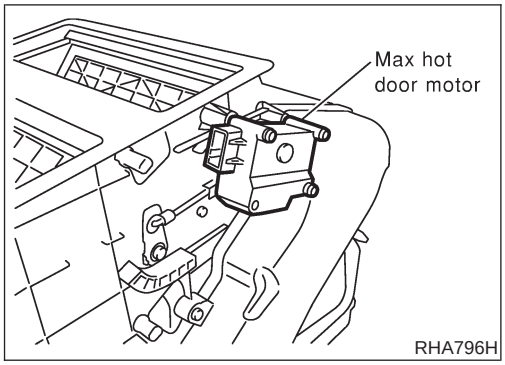

COMPONENT DESCRIPTION

NJHA0217

Max Hot Door Motor

NJHA0217S01

The max hot door motor is attached to the heater & cooling unit.

Mode door position	Temperature control position	Max hot door position
FOOT, D/F	Full hot	OPEN
	All except full hot	SHUT
VENT, B/L, DEF	Full hot	SHUT
	All except full hot	SHUT

DIAGNOSTIC PROCEDURE FOR MAX HOT DOOR MOTOR CIRCUIT

NJHA0218

1 CHECK SIGNAL FOR OPEN OPERATION

1. Turn ignition switch to ON position.
2. Set temperature dial to "FULL COLD" position, and mode control dial to the "DEF ( )", "VENT ( )" or "BI-LEVEL ( )" position.
3. Set temperature dial to "FULL HOT" position, and mode control dial to the "FOOT ( )" or "FOOT/DEF ( )" position. At this time, does an approx. 12 volts exist between the max hot door motor harness connector terminal 7 and the body ground until the max hot door is fully opened?

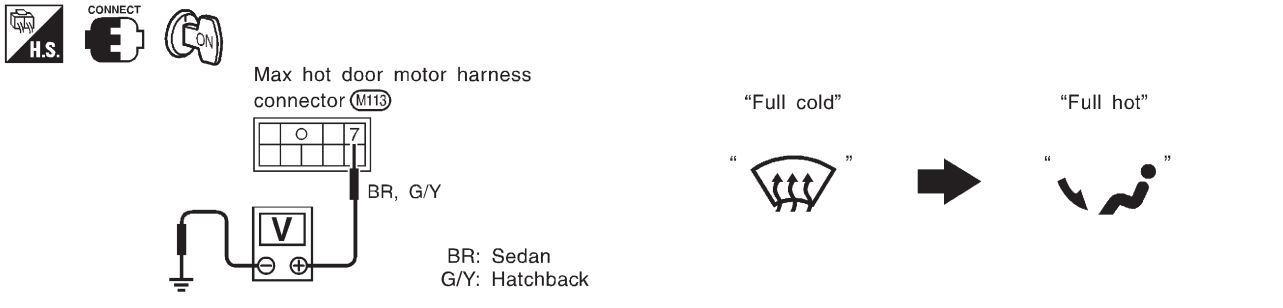

Yes or No

Yes ▶	GO TO 2. [If max hot door motor does not operate even if approx. 12 volts exist, then replace max hot door motor. (Before replacing the motor, check for smooth operation of the door.)]
No ▶	GO TO 3.

2	CHECK SIGNAL FOR CLOSE OPERATION

1. Turn ignition switch to ON position.
2. Set temperature dial to "FULL HOT" position, and mode control dial to the "FOOT ( )" or "FOOT/DEF ( )" position
3. Set temperature dial to "FULL COLD" position, and the mode control dial to the "DEF ( )", "VENT ( )" or "BI-LEVEL ( )" position. At this time, does an approx. 12 volts exist between the max hot door motor harness connector terminal 6 and the body ground until the max hot door is fully closed?

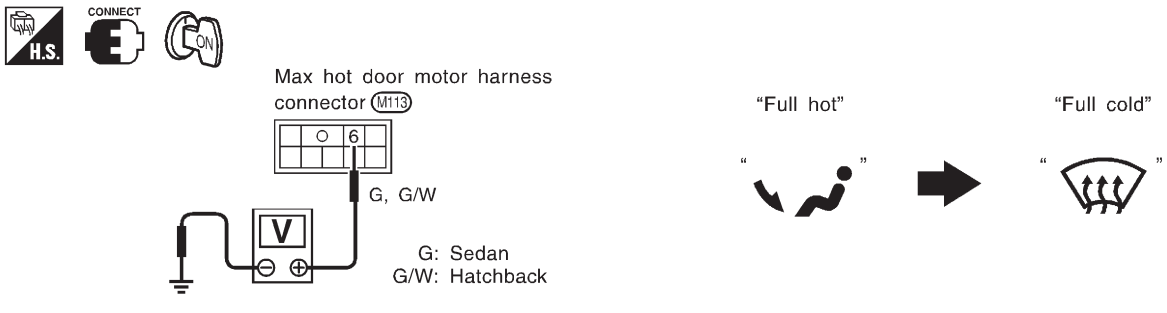

Yes or No

Yes	▶	INSPECTION END. (Max hot door motor is OK.) [If max hot door motor does not operate even if approx. 12 volts exist, then replace the max hot door motor. (Before replacing the motor, check for smooth operation of the door.)]
No	▶	GO TO 3.

3	CHECK SIGNAL CIRCUIT

1. Disconnect heater control panel harness connector and max hot door motor harness connector.
2. Check for continuity between heater control panel harness connector terminal 19 and max hot door motor harness connector terminal 6, heater control panel harness connector terminal 21 and max hot door motor harness connector terminal 7.

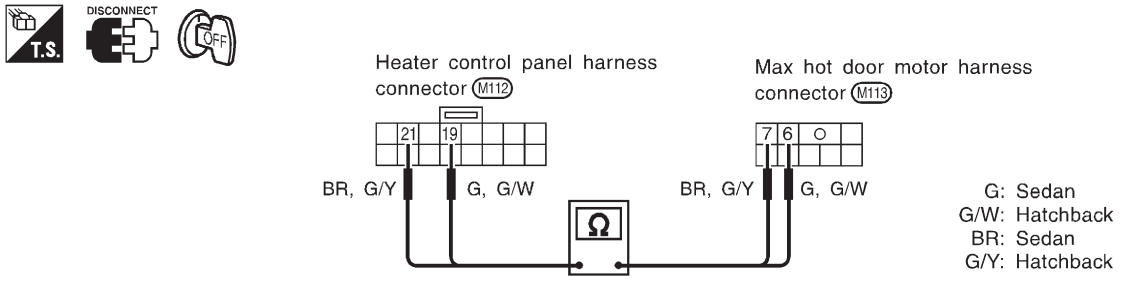

Continuity should exist.
If OK, check harness for short.

Yes or No

Yes	▶	GO TO 4.
No	▶	Repair harness or connector. If harness and connector are OK, replace heater control panel.

4	CHECK SIGNAL FOR POSITION SWITCH

1. Connect the heater control panel harness connector and the max hot door motor harness connector.
2. Check the voltage between the heater control panel harness connector terminal 20 and body ground, heater control panel harness connector terminal 22 and body ground as shown in the condition below.

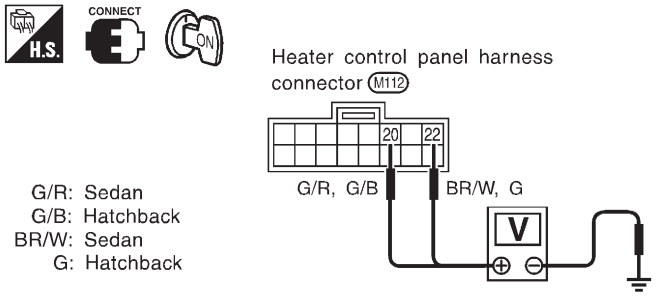

Terminals	Max hot door position		
	Full open	←→	Full close
20 - Ground	12V	12V	0V
22 - Ground	0V	12V	12V

RHA923HA

OK or NG

OK	▶	Position switch (max hot door motor) is OK.
NG	▶	GO TO 5.

5	CHECK POSITION SWITCH (BUILT-IN MAX HOT DOOR MOTOR)

Check continuity between max hot door motor terminals 1 and 5, 4 and 5 as shown in the condition below.

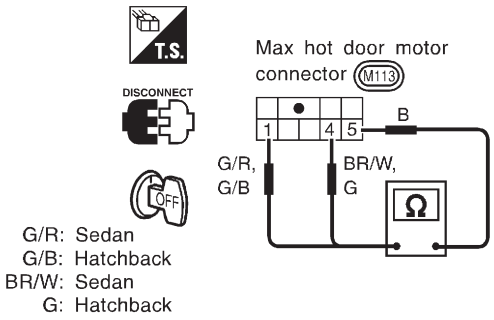

Terminals	Max hot door position	
	Full open	Full closed
1 - 5	Continuity should not exist.	Continuity should exist.
4 - 5	Continuity should exist.	Continuity should not exist.

RHA916HA

OK or NG

OK	▶	INSPECTION END. (Position switch is OK.)
NG	▶	Check harness for open or short between: ● Heater control panel harness connector terminals 20, 22 and max hot door harness connector terminals 1, 4. ● Max hot door motor harness connector terminal 5 and body ground.

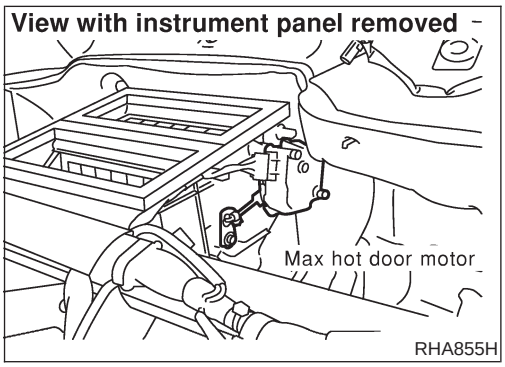

RHA855H

CONTROL LINKAGE ADJUSTMENT

NJHA0219

Max Hot Door

NJHA0219S01

1. Install max hot door motor on heater unit. Ensure that the max hot door lever is fitted into the slit portion of max hot door link.
2. Connect the max hot door motor harness connector.
3. Turn ignition switch to "ON" position.
4. Turn the temperature control knob to full hot.
5. Check that max hot door operates properly when the mode control knob is turned to FOOT or D/F, and other positions.

Blower Motor

TROUBLE DIAGNOSIS PROCEDURE FOR BLOWER MOTOR

=NJHA0145

SYMPTOM:

- **Blower motor does not rotate at all.**

INSPECTION FLOW

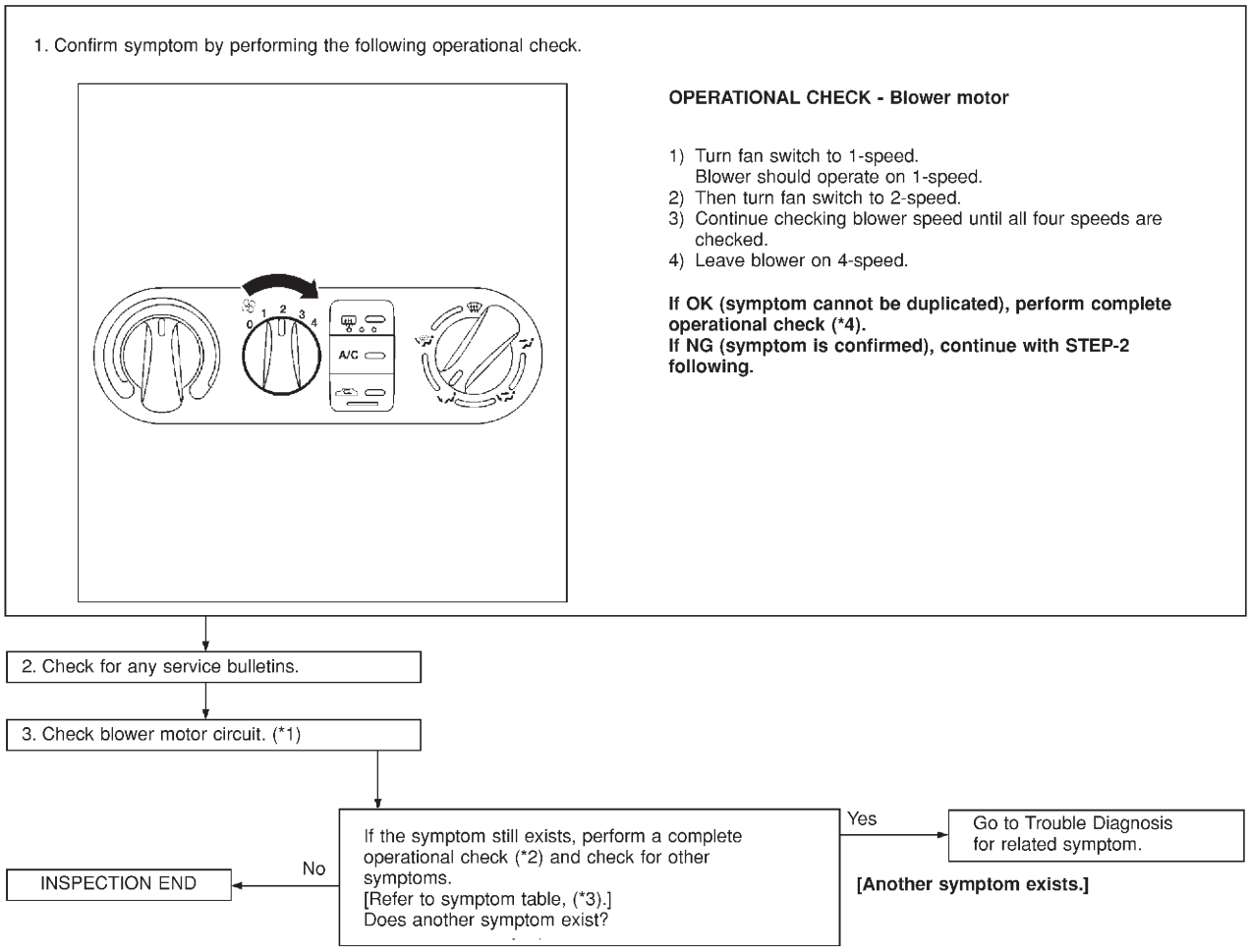

NHA385

*1: HA-49
*2: HA-34
*3: HA-33
*4: HA-34

BLOWER MOTOR CIRCUIT

=NJHA0147

SYMPTOM:

- **Blower motor does not rotate.**

Symptom table No.	INCIDENT
1	Fan fails to rotate.
2	Fan does not rotate at 1-speed.
3	Fan does not rotate at 2-speed.
4	Fan does not rotate at 3-speed.
5	Fan does not rotate at 4-speed.

1	**DIAGNOSTIC PROCEDURE**	
Check if blower motor rotates properly at each fan speed. Conduct checks as per symptom table at above.		
1	▶	GO TO 2.
2, 3, 4	▶	GO TO 8.
5	▶	GO TO 10.

2	**CHECK POWER SUPPLY FOR BLOWER MOTOR**	
1. Disconnect blower motor harness connector. 2. Do approx. 12 volts exist between blower motor harness terminal No. 1 and body ground?		

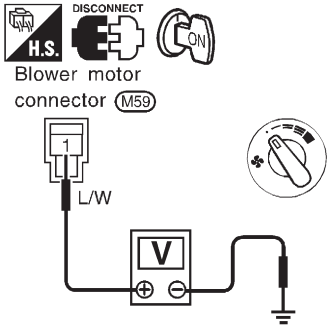

RHA343FD

Yes or No

Yes	▶	GO TO 3.
No	▶	Check 15A (Nos. 14 and 16) fuses at fuse block. Refer to Sedan: EL-11 (QG), EL-19 (YD), Hatchback: EL-28, "Wiring Diagram — POWER —".

3	CHECK CIRCUIT CONTINUITY FOR BLOWER MOTOR

1. Turn fan control knob to any position except OFF.
2. Check circuit continuity between blower motor harness terminal No. 2 and body ground.

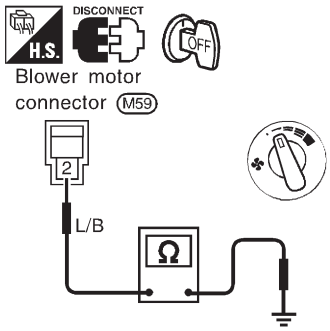

RHA344FD

Continuity should exist.
If OK, check harness for short.

OK or NG

OK	▶	GO TO 4.
NG	▶	Reconnect blower motor harness connector. GO TO 5.

4	CHECK BLOWER MOTOR

(Refer to Electrical Components Inspection.)
(HA-54)

OK or NG

OK	▶	INSPECTION END
NG	▶	Replace blower motor.

5	CHECK BLOWER MOTOR CIRCUIT BETWEEN BLOWER MOTOR AND RESISTOR

Do approx. 12 volts exist between fan resistor harness terminal No. 1 and body ground?

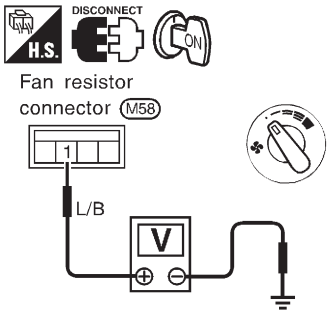

RHA699HA

Yes or No

Yes	▶	Disconnect fan switch harness connector. GO TO 7.
No	▶	Disconnect blower motor and resistor harness connectors. GO TO 6.

6	CHECK CIRCUIT CONTINUITY BETWEEN BLOWER MOTOR AND RESISTOR

Check circuit continuity between blower motor harness terminal No. 2 and fan resistor harness terminal No. 1.

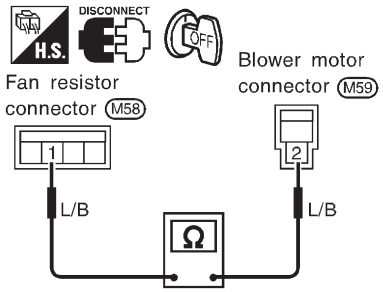

RHA700HA

Continuity should exist.
If OK, check harness for short.

OK or NG

OK	▶	Poor contact between the resistor and blower motor connector.
NG	▶	Repair harness or connector.

7	CHECK GROUND CIRCUIT FOR HEATER CONTROL PANEL

Check circuit continuity between fan switch harness terminal No. 9 or 13 and body ground.

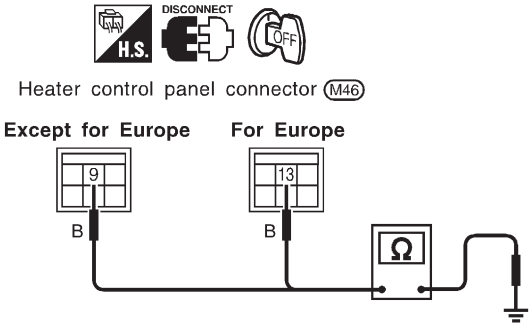

RHA849H

Continuity should exist.
If OK, check harness for short.

OK or NG

OK	▶	GO TO 8.
NG	▶	Repair harness or connector.

8	CHECK RESISTOR AFTER DISCONNECTING IT

(Refer to Electrical Components Inspection.)
(HA-54)

OK or NG

OK	▶	GO TO 9.
NG	▶	Replace resistor.

9	CHECK RESISTOR HARNESS CONNECTOR

Reconnect resistor harness connector.

OK or NG

1	▶	GO TO 12.
2, 3, 4	▶	GO TO 10.

10 CHECK FAN SWITCH CIRCUIT

Do approx. 12 volts exist between each fan switch harness terminal and body ground?

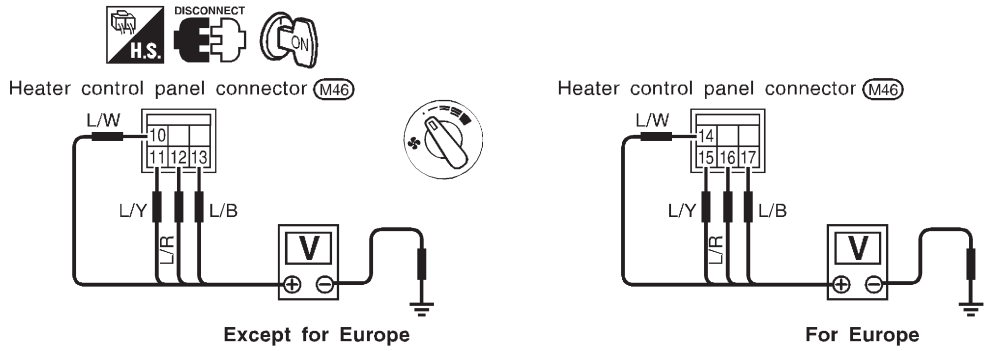

Symptom table No.	Terminal No. (+)	Terminal No. (–)	Voltage
2	10 (14)	Body ground	Approx. 12V
3	11 (15)		
4	12 (16)		
5	13 (17)		

RHA850H

Yes or No

Yes	▶	GO TO 13.
No	▶	GO TO 11.

11 CHECK CIRCUIT CONTINUITY BETWEEN HEATER CONTROL PANEL AND RESISTOR

Check circuit continuity between heater control panel harness terminals and fan resistor harness terminals.

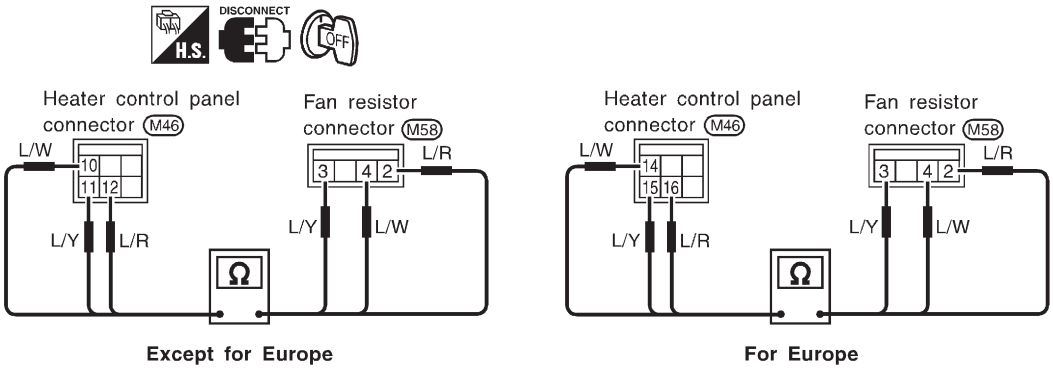

Terminal No. Heater control panel	Terminal No. Resistor	Continuity
10 (14)	4	Yes
11 (15)	3	
12 (16)	2	

RHA851H

Continuity should exist.
If OK, check harness for short.

OK or NG

OK	▶	GO TO 12.
NG	▶	Repair harness or connector.

12	CHECK CIRCUIT CONTINUITY BETWEEN HEATER CONTROL PANEL AND BLOWER MOTOR

Check circuit continuity between heater control panel harness terminal No. 13 or 17 and blower motor harness terminal No. 2.

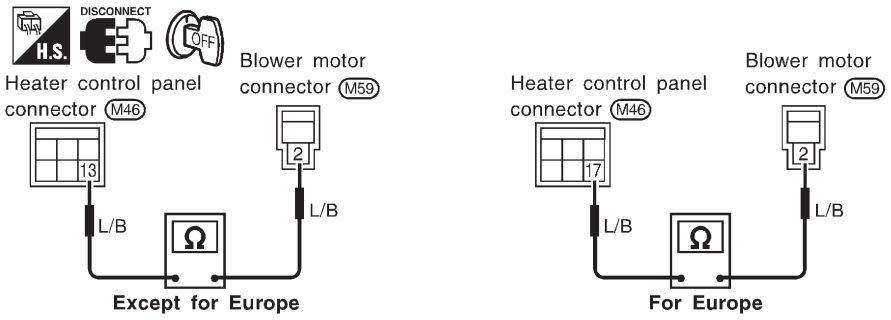

RHA852H

Continuity should exist.

If OK, check harness for short.

OK or NG

OK	▶	GO TO 13.
NG	▶	Repair harness or connector.

13	CHECK FAN SWITCH AFTER DISCONNECTING IT

(Refer to Electrical Components Inspection.)
(HA-54)

OK or NG

OK	▶	INSPECTION END
NG	▶	Replace fan switch.

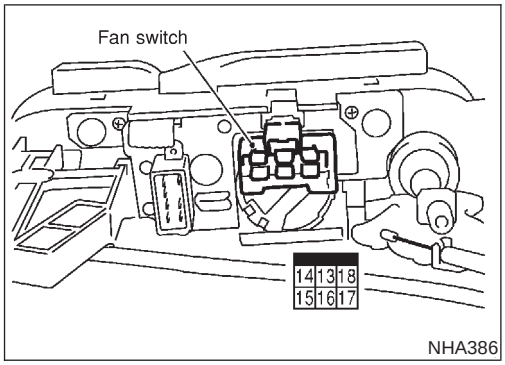

ELECTRICAL COMPONENTS INSPECTION

=NJHA0146

Fan Switch

NJHA0146S01

Check continuity between terminals at each switch position.

KNOB POSITION	Continuity between terminals
OFF	No continuity
1	13 — 14 — 18
2	13 — 15 — 18
3	13 — 16 — 18
4	13 — 17 — 18

Blower Motor

NJHA0146S02

Confirm smooth rotation of the blower motor.

- Ensure that there are no foreign particles inside the intake unit.

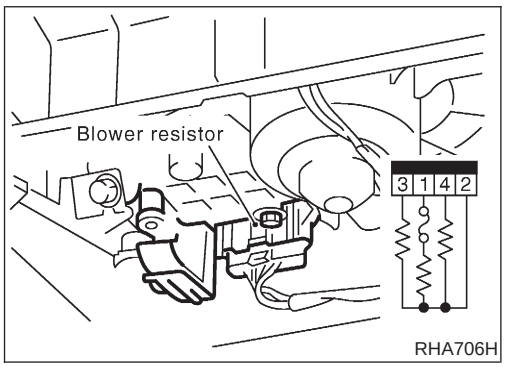

Blower Resistor

NJHA0146S03

Check resistance between terminals.

Terminal No.		Resistance	
(+)	(−)	LHD models for Europe	Except LHD models for Europe
4	1	Approx. 2.4 - 2.8Ω	
3		Approx. 0.58 - 0.7Ω	Approx. 1.2 - 1.4Ω
2		Approx. 0.22 - 0.26Ω	Approx. 0.43 - 0.51Ω

Magnet Clutch

TROUBLE DIAGNOSIS PROCEDURE FOR MAGNET CLUTCH

=NJHA0155

SYMPTOM:

- **Magnet clutch does not operate when A/C switch and fan switch are ON.**

INSPECTION FLOW

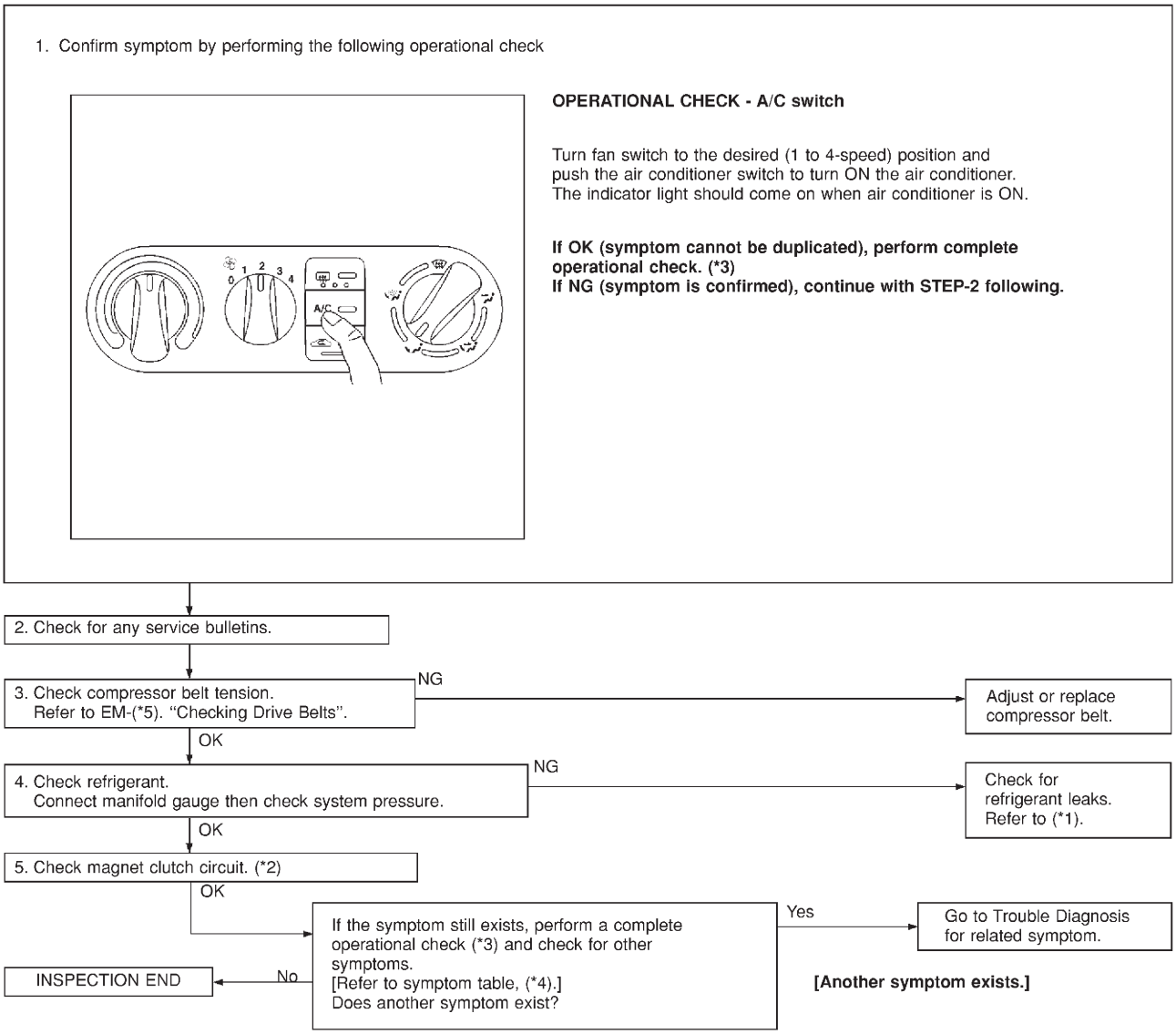

NHA387

*1: HA-93
*2: HA-56
*3: HA-34
*4: HA-33
*5: EM-16 (QG), EM-85 (YD)

MAGNET CLUTCH CIRCUIT (FOR QG ENGINE)

=NJHA0156

SYMPTOM:

- **Magnet clutch does not engage when A/C switch and fan switch are ON.**

1	CHECK POWER SUPPLY FOR COMPRESSOR	
Disconnect compressor harness connector. Do approx. 12 volts exist between compressor harness terminal No. 1 and body ground? 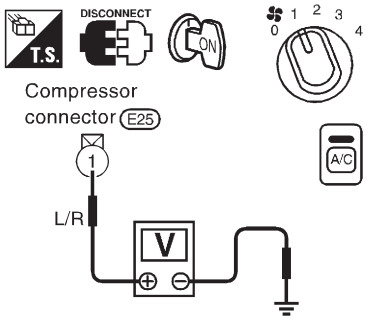 RHA794H		
Yes or No		
Yes	▶	GO TO 2.
No	▶	Disconnect A/C relay. GO TO 3.

2	CHECK MAGNET CLUTCH COIL	
OK or NG		
NG	▶	Replace magnet clutch. Refer to HA-85.

3	CHECK CIRCUIT CONTINUITY BETWEEN A/C RELAY AND COMPRESSOR HARNESS	
Check circuit continuity between A/C relay harness terminal No. 3 and compressor harness terminal No. 1. 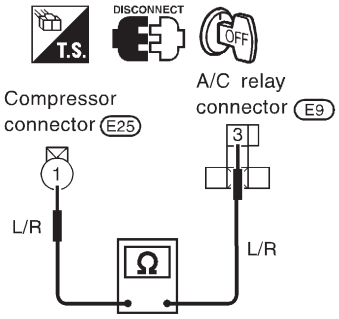 RHA634H **Continuity should exist.** **If OK, check harness for short.**		
OK or NG		
OK	▶	GO TO 4.
NG	▶	Repair harness or connector.

4	CHECK POWER SUPPLY FOR A/C RELAY

Disconnect A/C relay.
Do approx. 12 volts exist between A/C relay harness terminal Nos. 1, 5 and body ground?

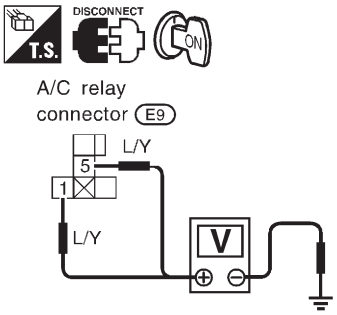

RHA635H

Yes or No

Yes	▶	GO TO 5.
No	▶	Check power supply circuit and 10A (No. 15) fuse at fuse block. Refer to Sedan: EL-11, Hatchback: EL-28, "Wiring Diagram — POWER —".

5	CHECK A/C RELAY AFTER DISCONNECTING IT

Refer to HA-66.

OK or NG

OK	▶	Reconnect A/C relay. GO TO 6.
NG	▶	Replace A/C relay.

6	CHECK COIL SIDE CIRCUIT OF A/C RELAY

Do approx. 12 volts exist between ECM harness terminal No. 16 or 23 and body ground?

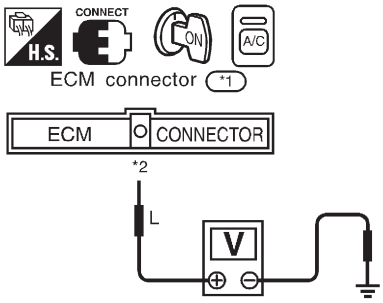

Except for Europe
*1: F51
*2: 16
For Europe
*1: F56
*2: 23

RHA764H

Yes or No

Yes	▶	GO TO 8.
No	▶	Disconnect A/C relay. Disconnect ECM harness connector. GO TO 7.

7	CHECK CIRCUIT CONTINUITY BETWEEN A/C RELAY AND ECM HARNESS

Check circuit continuity between A/C relay harness terminal No. 2 and ECM harness terminal No. 16 or 23.

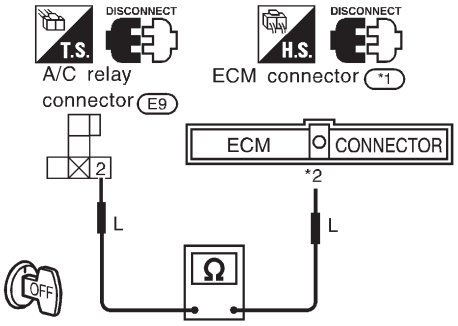

Except for Europe
*1: F51
*2: 16
For Europe
*1: F56
*2: 23

RHA765H

Continuity should exist.
If OK, check harness for short.

OK or NG

OK	▶	Check ECM. Refer to EC-164 (QG), "ECM Terminals and Reference Value".
NG	▶	Repair harness or connector.

8	CHECK VOLTAGE FOR ECM

Do approx. 12 volts exist between ECM harness terminal No. 68 or 51 and body ground?

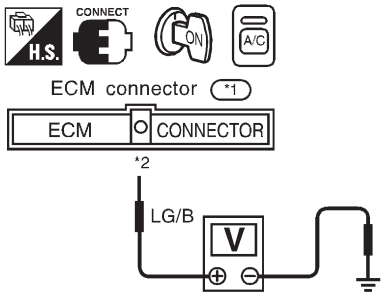

Except for Europe
*1: F51
*2: 68
For Europe
*1: F56
*2: 51

RHA766H

Yes or No

Yes	▶	GO TO 9.
No	▶	Check ECM. Refer to EC-164 (QG), EC-659 (YD), "ECM Terminals and Reference Value".

9	CHECK REFRIGERANT PRESSURE SENSOR

Refer to HA-67.

OK or NG

OK	▶	GO TO 10.
NG	▶	Replace refrigerant pressure sensor.

10	CHECK A/C SWITCH

Refer to HA-67.

OK or NG

OK	▶	GO TO 11.
NG	▶	Replace heater control panel.

11	CHECK POWER SUPPLY FOR HEATER CONTROL PANEL (A/C SWITCH)

Do approx. 12 volts exist between heater control panel harness terminal No. 7 and body ground?

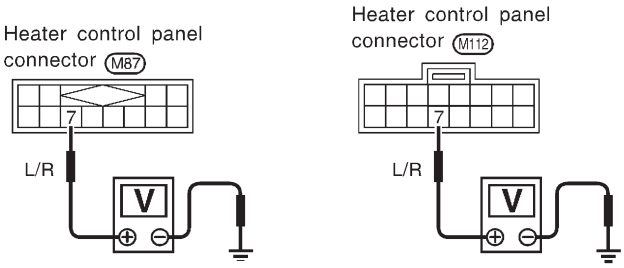

NHA487

Yes or No

Yes	▶	GO TO 13.
No	▶	GO TO 12.

12	CHECK CIRCUIT CONTINUITY BETWEEN HEATER CONTROL PANEL AND ECM

Check circuit continuity between heater control panel harness terminal No. 7 and ECM harness terminal No. 44.

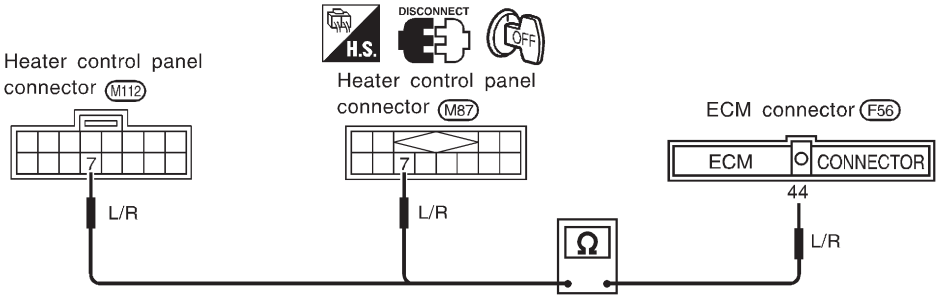

NHA488

Continuity should exist.
If OK, check harness for short.

OK or NG

OK	▶	Check ECM. Refer to EC-164 (QG), EC-659 (YD), "ECM Terminals and Reference Value".
NG	▶	Repair harness or connector.

13	CHECK HEATER CONTROL PANEL CIRCUIT

Check circuit continuity between heater control panel harness terminal No. 8 and 18.

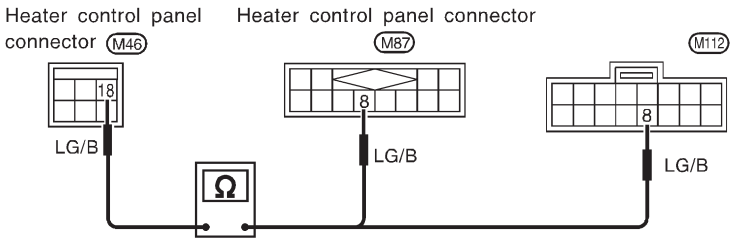

NHA489

Continuity should exist.
If OK, check harness for short.

OK or NG

OK	▶	GO TO 14.
NG	▶	Repair harness or connector.

14	CHECK CIRCUIT CONTINUITY BETWEEN ECM AND HEATER CONTROL PANEL

Check circuit continuity between ECM harness terminal No. 68 or 51 and heater control panel harness terminal No. 14 or 18.

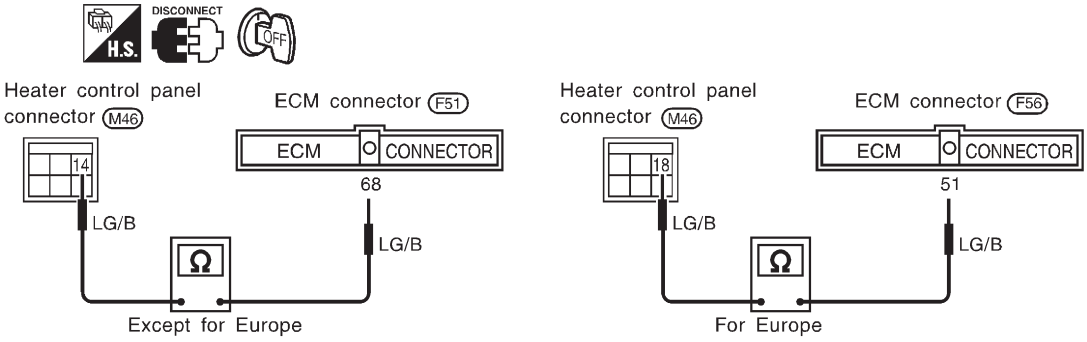

RHA770H

Continuity should exist.
If OK, check harness for short.

OK or NG

OK	▶	GO TO 15.
NG	▶	Repair harness or connector.

15	CHECK FAN SWITCH

Refer to HA-54.

Yes or No

Yes	▶	GO TO 16.
No	▶	Replace heater control panel.

16	CHECK BODY GROUND CIRCUIT

Check circuit continuity between heater control panel harness terminal No. 9 or 13 and body ground.

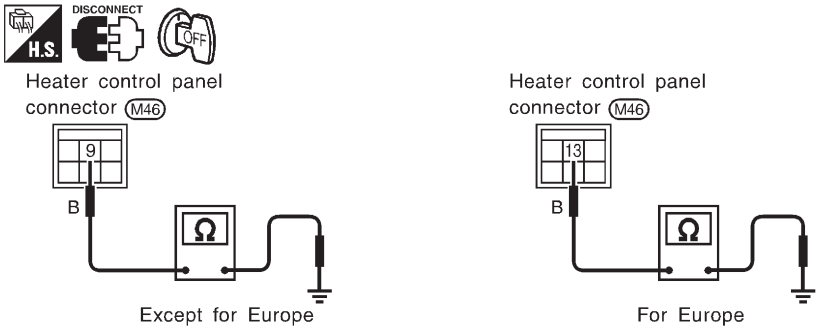

RHA771H

Continuity should exist.
If OK, check harness for short.

OK or NG

OK	▶	INSPECTION END
NG	▶	Repair harness or connector.

MAGNET CLUTCH CIRCUIT (FOR YD ENGINE)

NJHA0203

SYMPTOM:

- **Magnet clutch does not engage when A/C switch and fan switch are ON.**

1	CHECK POWER SUPPLY FOR COMPRESSOR

Disconnect compressor harness connector.
Do approx. 12 volts exist between compressor harness terminal No. 1 and body ground?

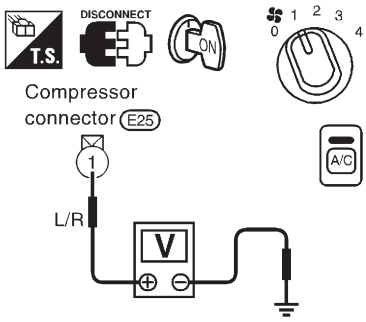

RHA794H

Yes or No

Yes	▶	GO TO 2.
No	▶	Disconnect A/C relay. GO TO 3.

2	CHECK MAGNET CLUTCH COIL

OK or NG

NG	▶	Replace magnet clutch. Refer to HA-85.

3	CHECK CIRCUIT CONTINUITY BETWEEN A/C RELAY AND COMPRESSOR HARNESS

Check circuit continuity between A/C relay harness terminal No. 3 and compressor harness terminal No. 1.

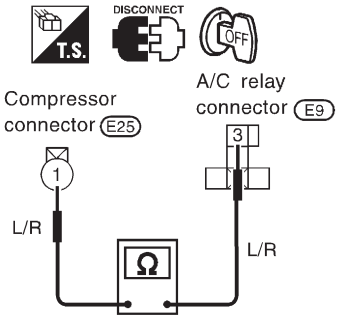

RHA634H

Continuity should exist.
If OK, check harness for short.

OK or NG

OK	▶	GO TO 4.
NG	▶	Repair harness or connector.

4	CHECK POWER SUPPLY FOR A/C RELAY

Disconnect A/C relay.
Do approx. 12 volts exist between A/C relay harness terminal Nos. 1, 5 and body ground?

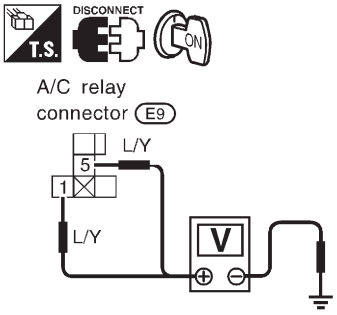

RHA635H

Yes or No

Yes	▶	GO TO 5.
No	▶	Check power supply circuit and 10A (No. 15) fuse at fuse block. Refer to Sedan: EL-11, Hatchback: EL-28, "Wiring Diagram — POWER —".

5	CHECK A/C RELAY AFTER DISCONNECTING IT

Refer to HA-66.

OK or NG

OK	▶	Reconnect A/C relay. GO TO 6.
NG	▶	Replace A/C relay.

6	CHECK COIL SIDE CIRCUIT OF A/C RELAY

Do approx. 12 volts exist between ECM harness terminal No. 15 or 204 and body ground?

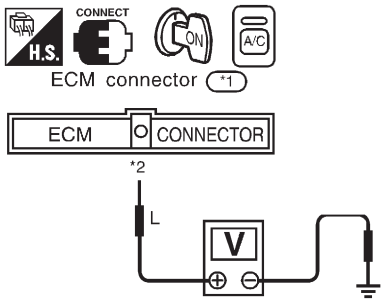

Except for Europe
*1: F51
*2: 15
For Europe
*1: F58 , F60
*2: 204

RHA772H

Yes or No

Yes	▶	GO TO 8.
No	▶	Disconnect A/C relay. Disconnect ECM harness connector. GO TO 7.

7	CHECK CIRCUIT CONTINUITY BETWEEN A/C RELAY AND ECM HARNESS

Check circuit continuity between A/C relay harness terminal No. 2 and ECM harness terminal No. 15 or 204.

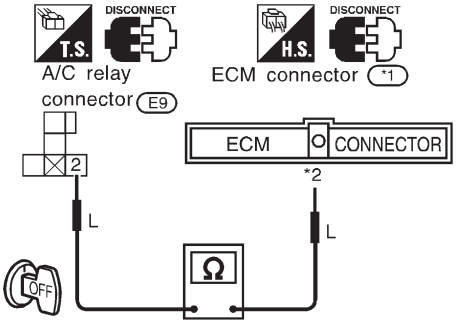

Except for Europe
*1: F51
*2: 15
For Europe
*1: F58 , F60
*2: 204

RHA773H

Continuity should exist.
If OK, check harness for short.

OK or NG

OK	▶	Check ECM. Refer to EC-164 (QG), EC-659 (YD), "ECM Terminals and Reference Value".
NG	▶	Repair harness or connector.

8	CHECK VOLTAGE FOR ECM

Do approx. 12 volts exist between ECM harness terminal No. 21 or 403 and body ground?

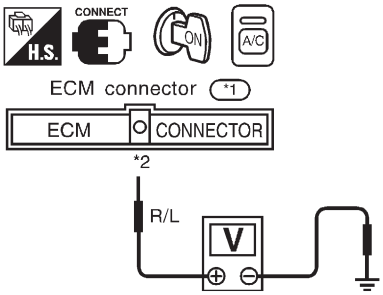

Except for Europe
*1: F51
*2: 21
For Europe
*1: F58 , F60
*2: 403

RHA774H

Yes or No

Yes	▶	GO TO 9.
No	▶	Check ECM. Refer to EC-164 (QG), EC-659 (YD), "ECM Terminals and Reference Value".

9	CHECK POWER SUPPLY FOR DUAL-PRESSURE SWITCH

Do approx. 12 volts exist between dual-pressure switch harness terminal No. 2 and body ground?

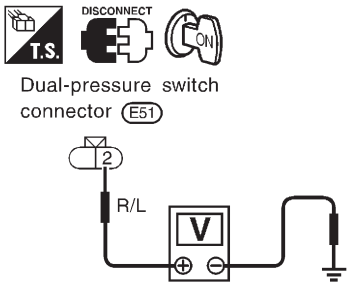

RHA775H

Yes or No

Yes	▶	GO TO 10.
No	▶	Repair harness or connector.

10	CHECK DUAL-PRESSURE SWITCH

Refer to HA-67.

OK or NG

OK	▶	GO TO 11.
No	▶	Replace dual-pressure switch.

11	CHECK CIRCUIT CONTINUITY BETWEEN DUAL-PRESSURE SWITCH AND HEATER CONTROL PANEL (A/C SWITCH)

Check circuit continuity between dual-pressure switch harness terminal No. 1 and heater control panel harness terminal No. 7.

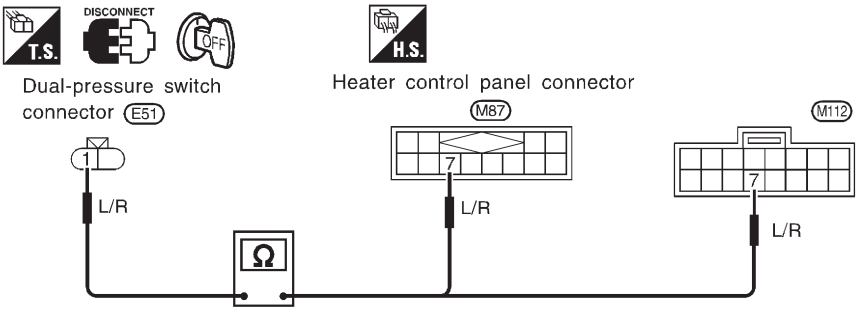

NHA490

Continuity should exist.
If OK, check harness for short.

OK or NG

OK	▶	GO TO 12.
NG	▶	Repair harness or connector.

12	CHECK A/C SWITCH

Refer to HA-67.

OK or NG

OK	▶	GO TO 13.
NG	▶	Replace A/C switch.

13	CHECK HEATER CONTROL PANEL CIRCUIT

Check circuit continuity between heater control panel harness terminal No. 8 and No. 18.

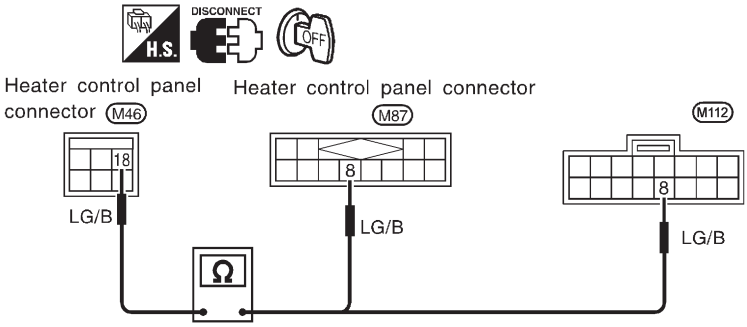

NHA491

Continuity should exist.
If OK, check harness for short.

OK or NG

OK	▶	GO TO 14.
NG	▶	Repair harness or connector.

14	CHECK FAN SWITCH	
Refer to HA-54.		
	OK or NG	
OK	▶	GO TO 15.
NG	▶	Replace fan switch.

15	CHECK BODY GROUND CIRCUIT	
Check circuit continuity between heater control panel harness terminal No. 13 and body ground.		

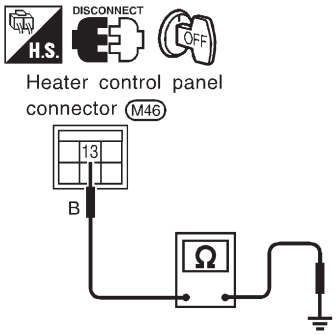

RHA778H

Continuity should exist.
If OK, check harness for short.

	OK or NG	
OK	▶	INSPECTION END.
NG	▶	Repair harness or connector.

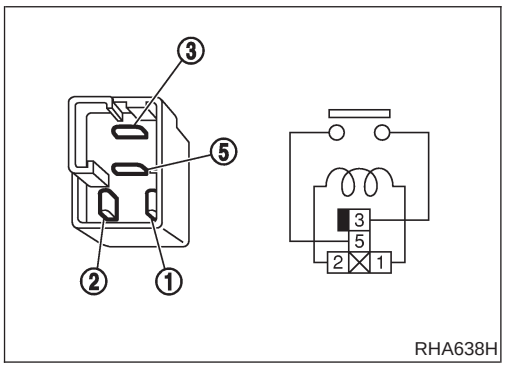

RHA638H

ELECTRICAL COMPONENT INSPECTION

NJHA0192

A/C Relay

NJHA0192S01

Check continuity between terminal Nos. 3 and 5.

Conditions	Continuity
12V direct current supply between terminal Nos. 1 and 2	Yes
No current supply	No

If NG, replace relay.

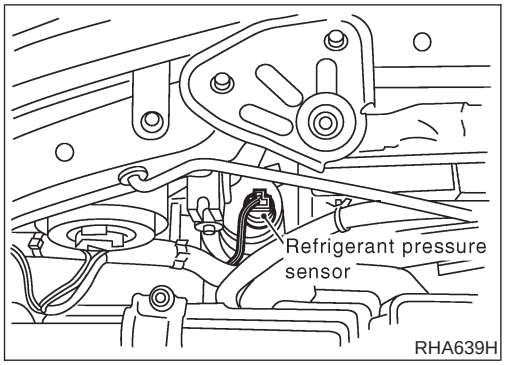

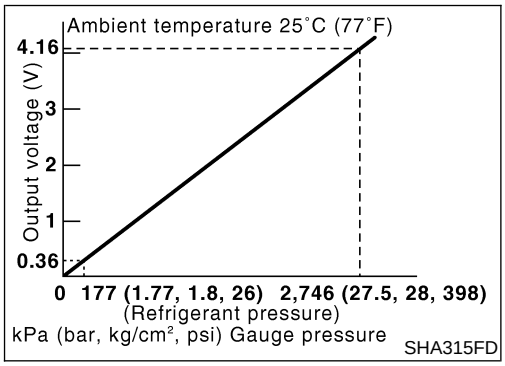

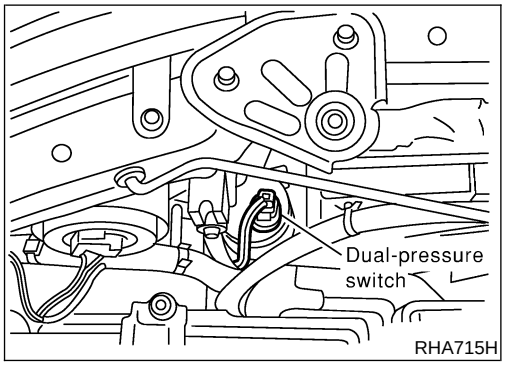

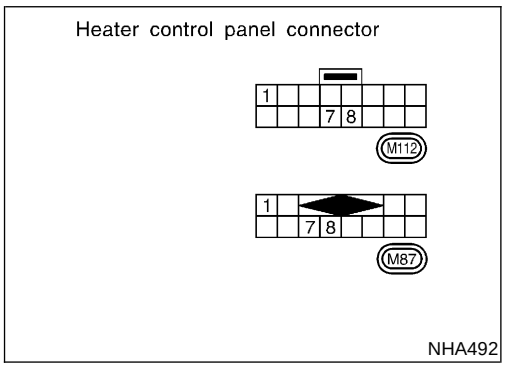

Refrigerant Pressure Sensor

NJHA0192S02

Make sure that the A/C refrigerant pressure and the sensor output voltage are within the specified range as shown in the A/C operating condition figure.

Check voltage between ECM harness terminal No. 74 and body ground.

Dual-pressure Switch

NJHA0192S03

	ON kPa (bar, kg/cm^2, psi)	OFF kPa (bar, kg/cm^2, psi)
Low-pressure side	Increasing to 157 - 216 (1.57 - 2.16, 1.6 - 2.2, 23 - 31)	Decreasing to 157 - 196 (1.57 - 1.96, 1.6 - 2.0, 23 - 28)
High-pressure side	Decreasing to 1,863 - 2,256 (18.6 - 22.6, 19 - 23, 270 - 327)	Increasing to 2,452 - 2,844 (24.5 - 28.4, 25 - 29, 356 - 412)

A/C Switch

NJHA0192S04

Check continuity between terminals.

	A/C switch	Terminals	Continuity
For Europe	ON	1 - 7	Yes
		1 - 8	
	OFF	1 - 7	No
		1 - 8	

Insufficient Cooling

TROUBLE DIAGNOSIS PROCEDURE FOR INSUFFICIENT COOLING

=NJHA0148

SYMPTOM:

- **Insufficient Cooling.**

INSPECTION FLOW

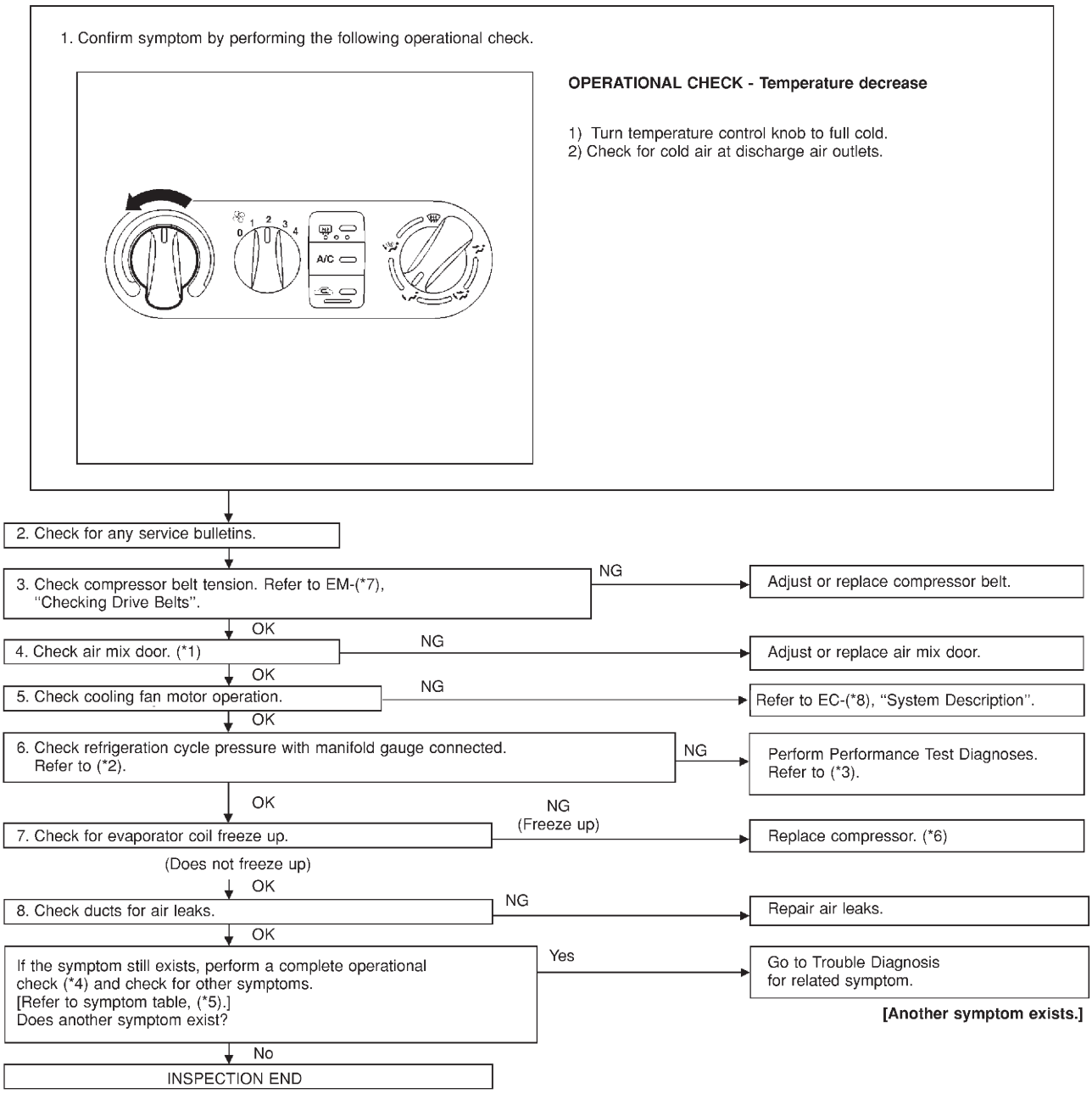

NHA390

*1: HA-42
*2: HA-72
*3: HA-69
*4: HA-34
*5: HA-33
*6: HA-83
*7: EM-16 (QG), EM-85 (YD)
*8: EC-406 (QG) Europe, EC-730 (YD) Europe

PERFORMANCE TEST DIAGNOSES

NJHA0149

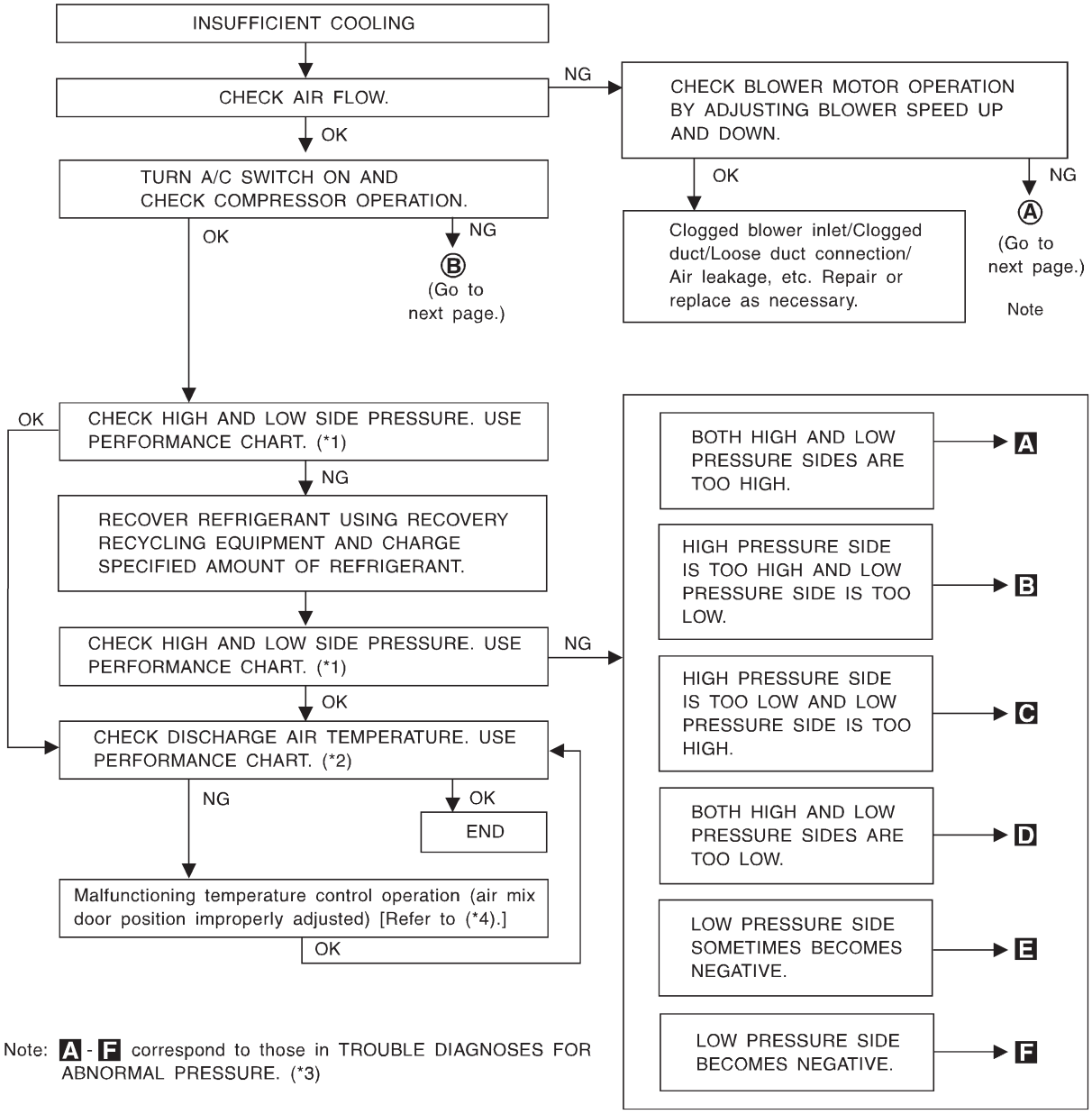

Note: A - F correspond to those in TROUBLE DIAGNOSES FOR ABNORMAL PRESSURE. (*3)

SHA419F

*1: HA-71
*2: HA-71
*3: HA-72
*4: HA-43

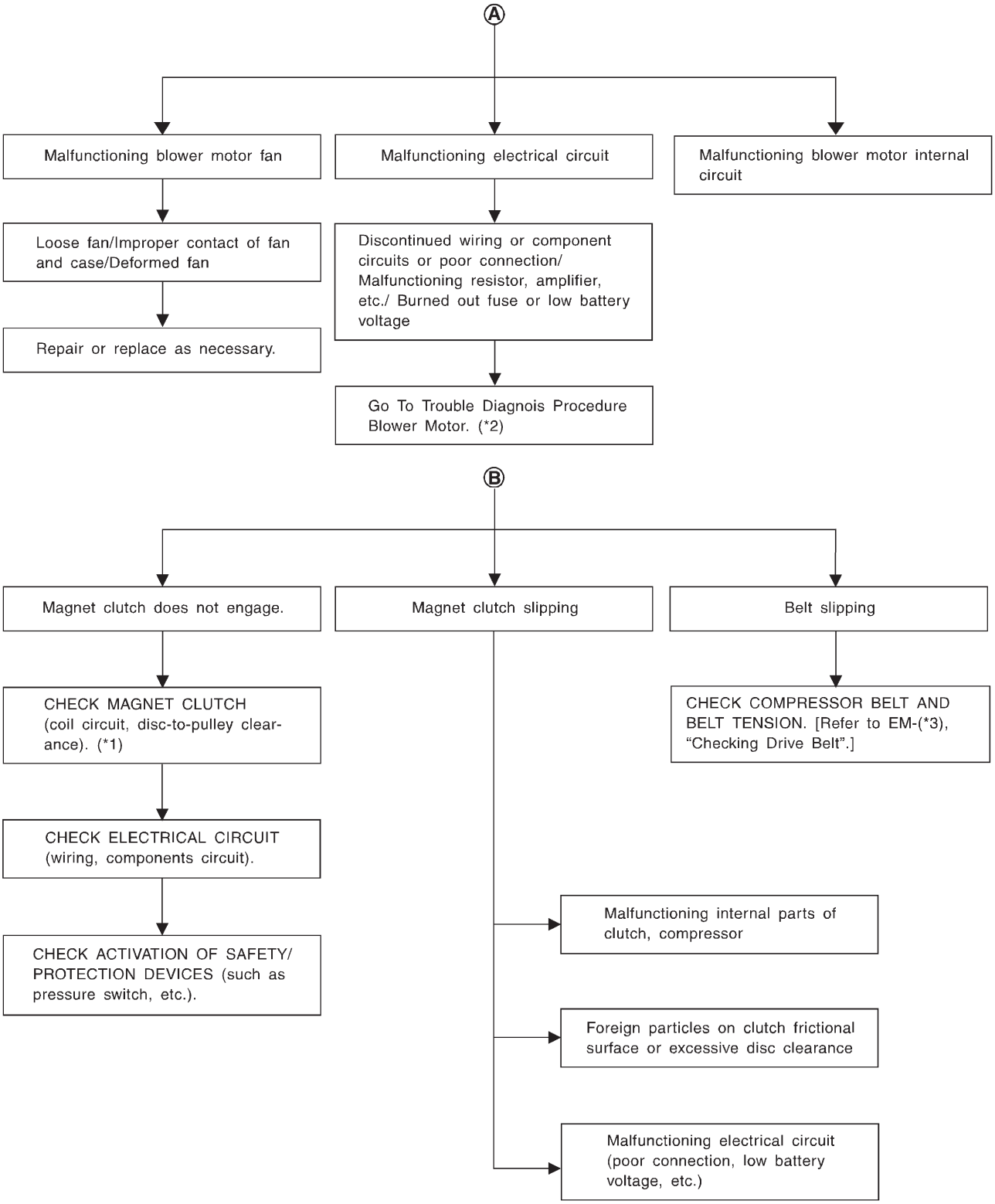

*1: HA-86

*2: HA-48

*3: EM-16 (QG), EM-85 (YD)

PERFORMANCE CHART

=NJHA0150

Test Condition

NJHA0150S01

Testing must be performed as follows:

Vehicle location: Indoors or in the shade (in a well-ventilated place)
Doors: Closed
Door window: Open
Hood: Open
TEMP.: Max. COLD
Discharge Air: Face Vent
REC switch: (Recirculation) set
FAN speed: High speed
Engine speed: Idle speed
Operate the air conditioning system for 10 minutes before taking measurements.

Test Reading

NJHA0150S02

Recirculating-to-discharge Air Temperature Table

NJHA0150S0201

Inside air (Recirculating air) at blower assembly inlet		Discharge air temperature at center ventilator °C (°F)
Relative humidity %	Air temperature °C (°F)	
50 - 60	20 (68)	6.0 - 8.8 (43 - 48)
	25 (77)	9.5 - 12.8 (49 - 55)
	30 (86)	14.1 - 17.7 (57 - 64)
60 - 70	20 (68)	8.8 - 11.6 (48 - 53)
	25 (77)	12.8 - 16.2 (55 - 61)
	30 (86)	17.7 - 21.1 (64 - 70)

Ambient Air Temperature-to-operating Pressure Table =NJHA0150S0202

Ambient air		High-pressure (Discharge side) kPa (bar, kg/cm^2, psi)	Low-pressure (Suction side) kPa (bar, kg/cm^2, psi)
Relative humidity %	Air temperature °C (°F)		
50 - 70	20 (68)	659 - 805 (6.590 - 8.052, 6.72 - 8.21, 95.6 - 116.7)	171 - 214 (1.706 - 213.8, 1.74 - 2.18, 24.7 - 31.0)
	25 (77)	799 - 980 (7.993 - 9.797, 8.15 - 9.99, 115.9 - 142.1)	185 - 220 (1.854 - 2.197, 1.89 - 2.24, 26.9 - 31.9)
	30 (86)	953 - 1,170 (9.532 - 11.700, 9.72 - 11.93, 138.2 - 169.6)	199 - 240 (1.991 - 2.403, 2.03 - 2.45, 28.9 - 34.8)
	35 (95)	1,121 - 1,363 (11.209 - 13.632, 11.43 - 13.90, 162.5 - 197.7)	228 - 282 (2.275 - 2.824, 2.32 - 2.88, 33.0 - 41.0)
	40 (104)	1,298 - 1,584 (12.984 - 15.838, 13.24 - 16.15, 188.3 - 229.7)	273 - 333 (2.726 - 3.334, 2.78 - 3.40, 39.5 - 48.3)

TROUBLE DIAGNOSES FOR ABNORMAL PRESSURE

NJHA0151

Whenever system's high and/or low side pressure is abnormal, diagnose using a manifold gauge. The marker above the gauge scale in the following tables indicates the standard (normal) pressure range. Since the standard (normal) pressure, however, differs from vehicle to vehicle, refer to HA-72 ("Ambient air temperature-to-operating pressure table").

Both High- and Low-pressure Sides are Too High.

NJHA0151S01

Gauge indication	Refrigerant cycle	Probable cause	Corrective action
Both high and low-pressure sides are too high. A 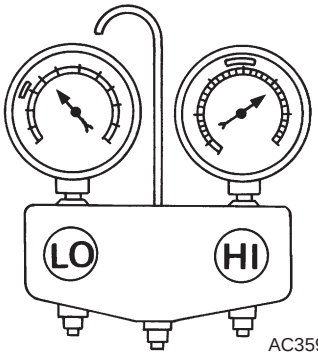 AC359A	● Pressure is reduced soon after water is splashed on condenser.	Excessive refrigerant charge in refrigeration cycle	Reduce refrigerant until specified pressure is obtained.
	Air suction by cooling fan is insufficient.	Insufficient condenser cooling performance ↓ 1. Condenser fins are clogged. 2. Improper fan rotation of cooling fan	● Clean condenser. ● Check and repair cooling fan as necessary.
	● Low-pressure pipe is not cold. ● When compressor is stopped high-pressure value quickly drops by approximately 196 kPa (2.0 bar, 2 kg/cm^2, 28 psi). It then decreases gradually thereafter.	Poor heat exchange in condenser (After compressor operation stops, high pressure decreases too slowly.) ↓ Air in refrigeration cycle	Evacuate repeatedly and recharge system.
	Engine tends to overheat.	Engine cooling systems malfunction.	Check and repair each engine cooling system.
	● An area of the low-pressure pipe is colder than areas near the evaporator outlet. ● Plates are sometimes covered with frost.	● Excessive liquid refrigerant on low-pressure side ● Excessive refrigerant discharge flow ● Expansion valve is open a little compared with the specification. ↓ 1. Improper thermal valve installation 2. Improper expansion valve adjustment	Replace expansion valve.

High-pressure Side is Too High and Low-pressure Side is Too Low.

NJHA0151S02

Gauge indication	Refrigerant cycle	Probable cause	Corrective action
High-pressure side is too high and low-pressure side is too low. B 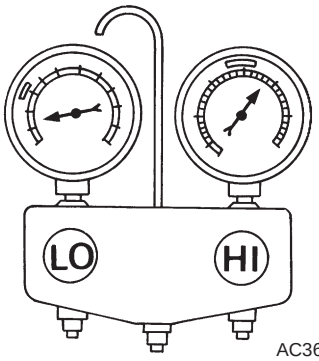 AC360A	Upper side of condenser and high-pressure side are hot, however, liquid tank is not so hot.	High-pressure tube or parts located between compressor and condenser are clogged or crushed.	● Check and repair or replace malfunctioning parts. ● Check lubricant for contamination.

High-pressure Side is Too Low and Low-pressure Side is Too High.

NJHA0151S03

Gauge indication	Refrigerant cycle	Probable cause	Corrective action
High-pressure side is too low and low-pressure side is too high. C 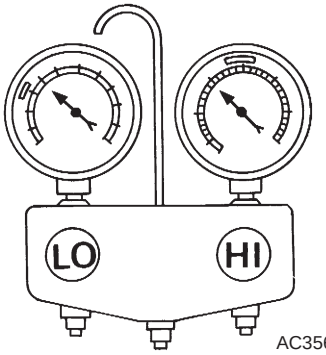 AC356A	High and low-pressure sides become equal soon after compressor operation stops.	Compressor pressure operation is improper. ↓ Damaged inside compressor packings	Replace compressor.
	No temperature difference between high and low-pressure sides	Compressor pressure operation is improper. ↓ Damaged inside compressor packings.	Replace compressor.

Both High- and Low-pressure Sides are Too Low.

NJHA0151S04

Gauge indication	Refrigerant cycle	Probable cause	Corrective action
Both high- and low-pressure sides are too low. D 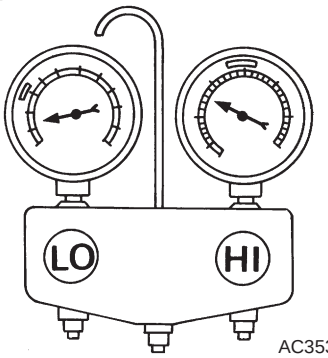 AC353A	● There is a big temperature difference between receiver drier outlet and inlet. Outlet temperature is extremely low. ● Liquid tank inlet and expansion valve are frosted.	Liquid tank inside is slightly clogged.	● Replace liquid tank. ● Check lubricant for contamination.
	● Temperature of expansion valve inlet is extremely low as compared with areas near liquid tank. ● Expansion valve inlet may be frosted. ● Temperature difference occurs somewhere in high- pressure side	High-pressure pipe located between receiver drier and expansion valve is clogged.	● Check and repair malfunctioning parts. ● Check lubricant for contamination.
	● Expansion valve and liquid tank are warm or only cool when touched.	Low refrigerant charge ↓ Leaking fittings or components	Check refrigerant for leaks. Refer to "Checking Refrigerant Leaks", HA-93.
	There is a big temperature difference between expansion valve inlet and outlet while the valve itself is frosted.	Expansion valve closes a little compared with the specification. ↓ 1. Improper expansion valve adjustment 2. Malfunctioning thermal valve 3. Outlet and inlet may be clogged.	● Remove foreign particles by using compressed air. ● Check lubricant for contamination.
	An area of the low-pressure pipe is colder than areas near the evaporator outlet.	Low-pressure pipe is clogged or crushed.	● Check and repair malfunctioning parts. ● Check lubricant for contamination.
	Air flow volume is not enough or is too low.	Evaporator is frozen.	● Check thermo control amp. operation. ● Replace compressor.

Low-pressure Side Sometimes Becomes Negative.

NJHA0151S05

Gauge indication	Refrigerant cycle	Probable cause	Corrective action
Low-pressure side sometimes becomes negative. E 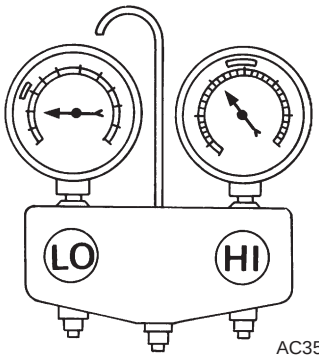 AC354A	● Air conditioning system does not function and does not cyclically cool the compartment air. ● The system constantly functions for a certain period of time after compressor is stopped and restarted.	Refrigerant does not discharge cyclically. ↓ Moisture is frozen at expansion valve outlet and inlet. ↓ Water is mixed with refrigerant.	● Drain water from refrigerant or replace refrigerant. ● Replace liquid tank.

Low-pressure Side Becomes Negative.

NJHA0151S06

Gauge indication	Refrigerant cycle	Probable cause	Corrective action
Low-pressure side becomes negative. F 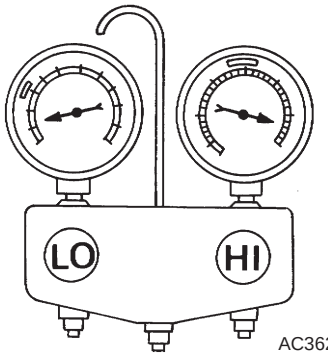 AC362A	Liquid tank or front/rear side of expansion valve's pipe is frosted or dewed.	High-pressure side is closed and refrigerant does not flow. ↓ Expansion valve or liquid tank is frosted.	Leave the system at rest until no frost is present. Start it again to check whether or not the problem is caused by water or foreign particles. ● If water is the cause, initially cooling is okay. Then the water freezes causing a blockage. Drain water from refrigerant or replace refrigerant. ● If due to foreign particles, remove expansion valve and remove particles with dry and compressed air (not shop air). ● If either of the above methods cannot correct the problem, replace expansion valve. ● Replace liquid tank. ● Check lubricant for contamination.

Insufficient Heating

TROUBLE DIAGNOSIS PROCEDURE FOR INSUFFICIENT HEATING

=NJHA0152

SYMPTOM: Insufficient heating.

INSPECTION FLOW

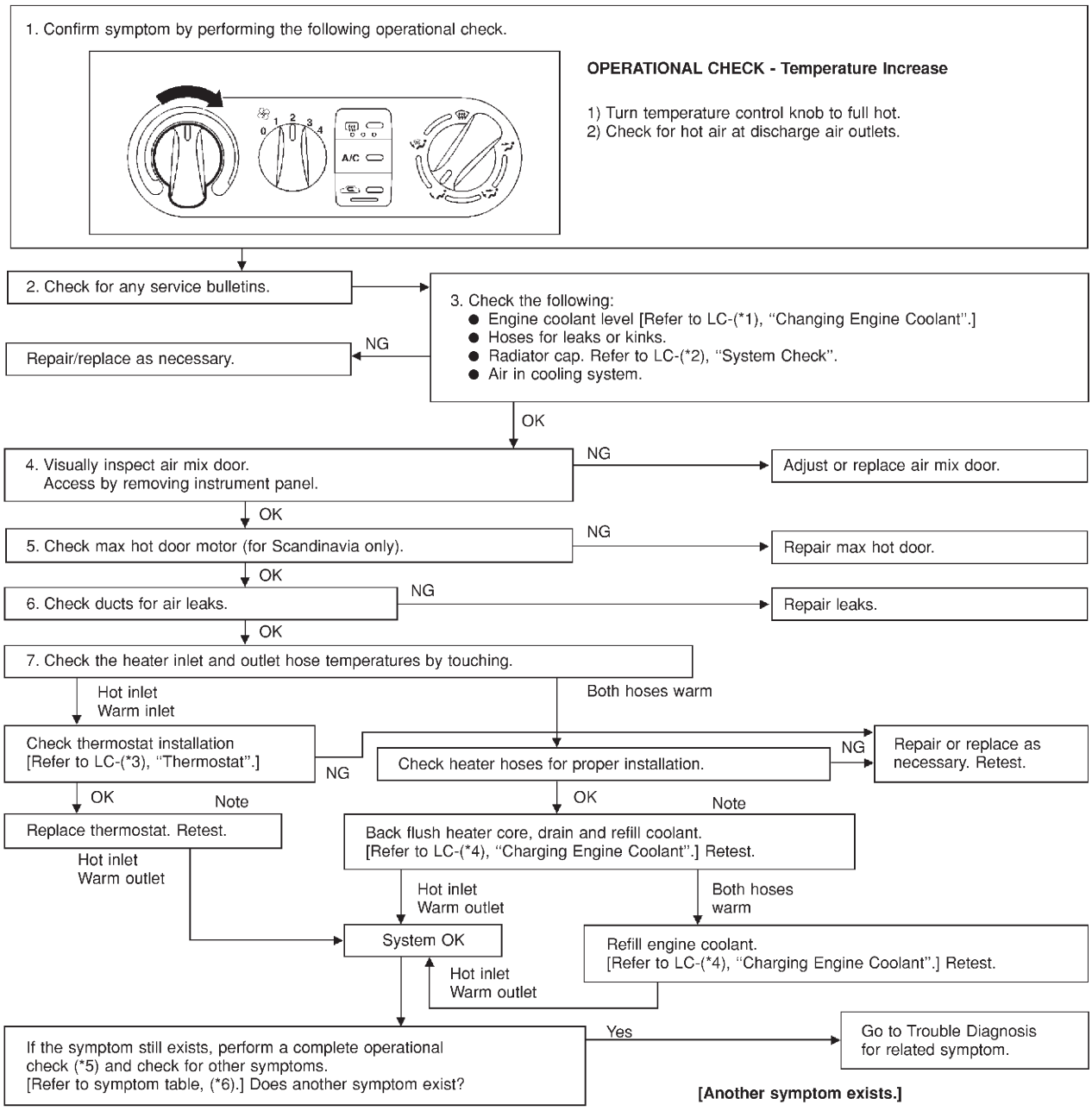

NHA391

*1: LC-18 (QG), LC-44 (YD)
*2: LC-12 (QG), LC-38 (YD)
*3: LC-15 (QG), LC-41 (YD)
*4: LC-20 (QG), LC-45 (YD)
*5: HA-34
*6: HA-33

Noise

TROUBLE DIAGNOSIS PROCEDURE FOR NOISE

=NJHA0158

SYMPTOM:

- **Noise**

INSPECTION FLOW

RHA925H

*1: HA-85
*2: HA-86
*3: HA-80

*4: EM-16 (QG), EM-85 (YD)

*5: LC-18 (QG), LC-44 (YD)

HFC-134a (R-134a) Service Procedure

NJHA0159

SETTING OF SERVICE TOOLS AND EQUIPMENT

NJHA0159S01

Discharging Refrigerant

NJHA0159S0101

WARNING:

Avoid breathing A/C refrigerant and lubricant vapor or mist. Exposure may irritate eyes, nose and throat. Remove HFC-134a (R-134a) from A/C system using certified service equipment meeting requirements of HFC-134a (R-134a) recycling equipment or HFC-134a (R-134a) recovery equipment. If accidental system discharge occurs, ventilate work area before resuming service. Additional health and safety information may be obtained from refrigerant and lubricant manufacturers.

Example

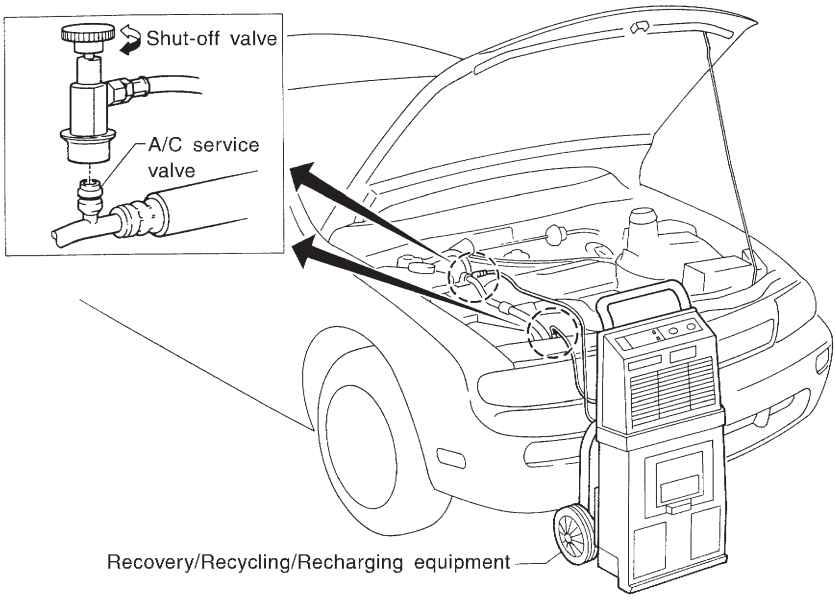

SHA539DE

Evacuating System and Charging Refrigerant

NJHA0159S0102

Example

Preferred (Best) method

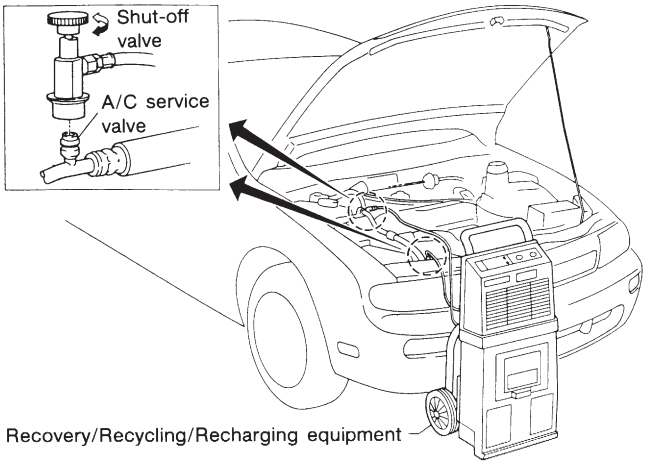

Alternate method

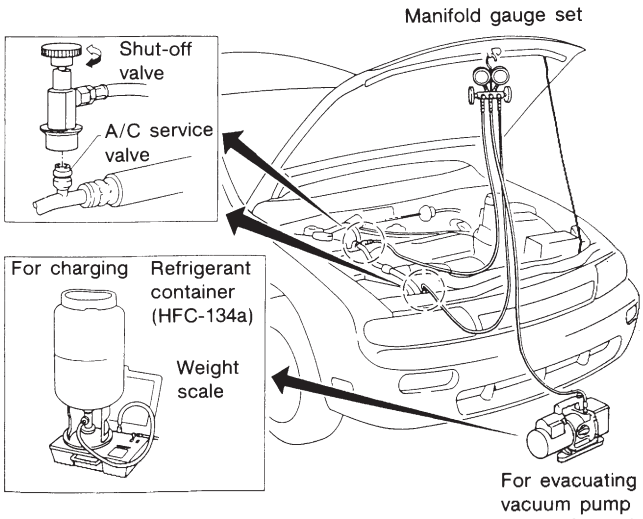

SHA540DC

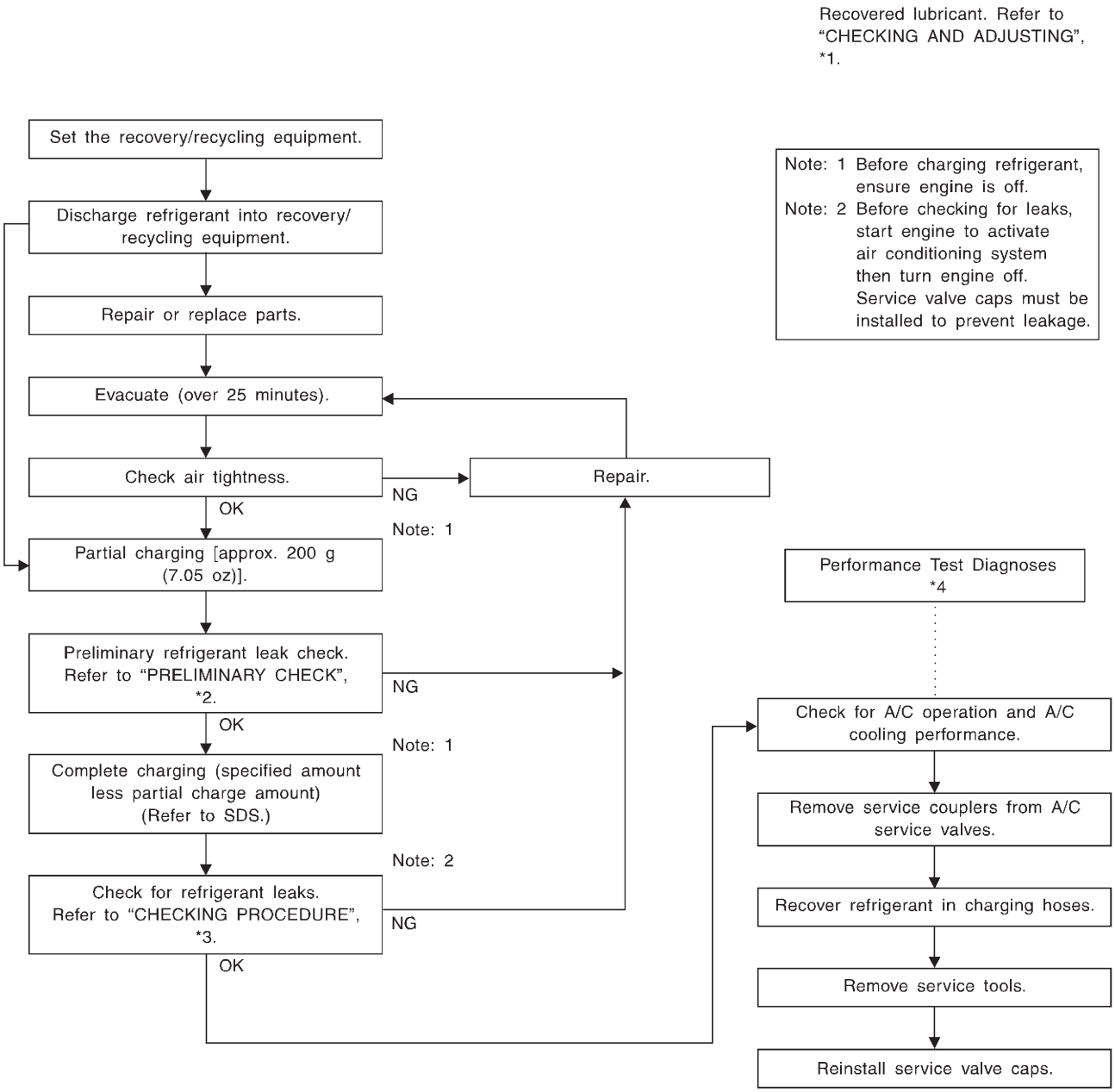

SHA383F

*1: HA-80
*2: HA-93
*3: HA-94
*4: HA-69

Maintenance of Lubricant Quantity in Compressor

NJHA0160

The lubricant in the compressor circulates through the system with the refrigerant. Add lubricant to compressor when replacing any component or after a large gas leakage occurred. It is important to maintain the specified amount.
If lubricant quantity is not maintained properly, the following malfunctions may result:

- Lack of lubricant: May lead to a seized compressor
- Excessive lubricant: Inadequate cooling (thermal exchange interference)

LUBRICANT

NJHA0160S01

Name: Nissan A/C System Oil Type R for DKV-11G compressor
Part number: KLH00-PAGR0

Name: Nissan A/C System Oil Type S for CSV613 compressor
Part number: KLH00-PAGS0

CHECKING AND ADJUSTING

NJHA0160S02

Adjust the lubricant quantity according to the test group shown below.

1	LUBRICANT RETURN OPERATION	
Can lubricant return operation be performed? ● A/C system works properly. ● There is no evidence of a large amount of lubricant leakage.		
	Yes or No	
Yes	▶	GO TO 2.
No	▶	GO TO 3.

2	PERFORM LUBRICANT RETURN OPERATION, PROCEEDING AS FOLLOWS	
1. Start engine, and set the following conditions: ● **Test condition** **Engine speed: Idling to 1,200 rpm** **A/C or AUTO switch: ON** **Blower speed: Max. position** **Temp. control: Optional [Set so that intake air temperature is 25 to 30°C (77 to 86°F).]** 2. Perform lubricant return operation for about 10 minutes. 3. Stop engine. **CAUTION:** **If excessive lubricant leakage is noted, do not perform the lubricant return operation.**		
	▶	GO TO 3.

3	CHECK COMPRESSOR	
Should the compressor be replaced?		
	Yes or No	
Yes	▶	GO TO HA-82.
No	▶	GO TO 4.

4	CHECK ANY PART	
Is there any part to be replaced? (Evaporator, condenser, liquid tank or in case there is evidence of a large amount of lubricant leakage.)		
	Yes or No	
Yes	▶	GO TO HA-82.
No	▶	Carry out the A/C performance test.

Lubricant Adjusting Procedure for Components Replacement Except Compressor

=NJHA0160S0201

After replacing any of the following major components, add the correct amount of lubricant to the system.

Amount of lubricant to be added

Part replaced	Lubricant to be added to system	Remarks
	Amount of lubricant mℓ (Imp fl oz)	
Evaporator	75 (2.6)	—
Condenser	75 (2.6)	—
Liquid tank	5 (0.2)	Add if compressor is not replaced. *1
In case of refrigerant leak	30 (1.1)	Large leak
	—	Small leak *2

*1: If compressor is replaced, addition of lubricant is included in the table.

*2: If refrigerant leak is small, no addition of lubricant is needed.

Lubricant Adjustment Procedure for Compressor Replacement

NJHA0160S0202

1. Discharge refrigerant into the refrigerant recovery/recycling equipment. Measure lubricant discharged into the recovery/recycling equipment.
2. Drain the lubricant from the "old" (removed) compressor into a graduated container and recover the amount of lubricant drained.
3. Drain the lubricant from the "new" compressor into a separate, clean container.
4. Measure an amount of new lubricant installed equal to amount drained from "old" compressor. Add this lubricant to "new" compressor through the suction port opening.
5. Measure an amount of new lubricant equal to the amount recovered during discharging. Add this lubricant to "new" compressor through the suction port opening.
6. If the liquid tank also needs to be replaced, add an additional 5 mℓ (0.2 Imp fl oz) of lubricant at this time.
   Do not add this 5 mℓ (0.2 Imp fl oz) of lubricant if only replacing the compressor.

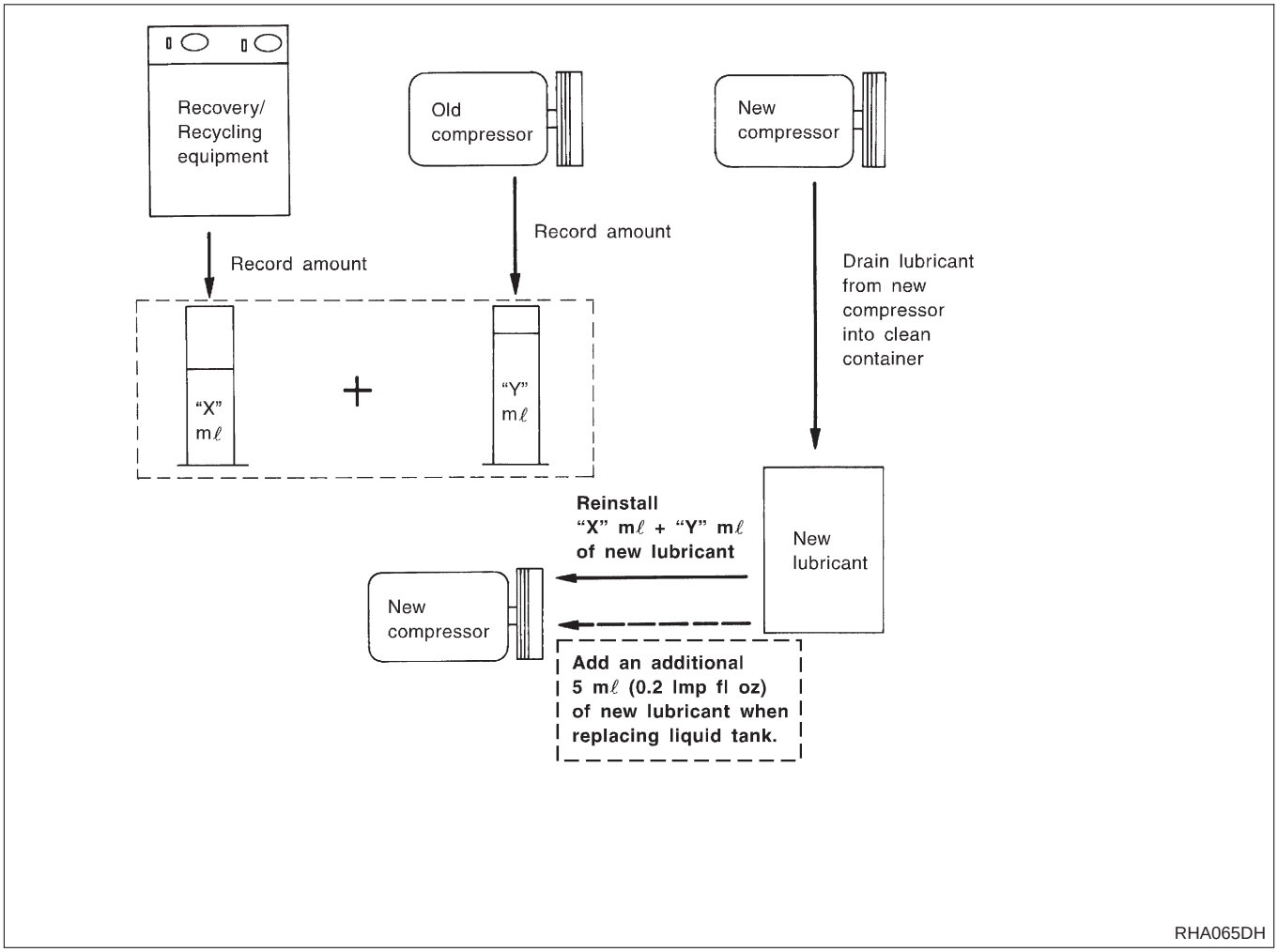

Compressor

REMOVAL AND INSTALLATION

NJHA0161

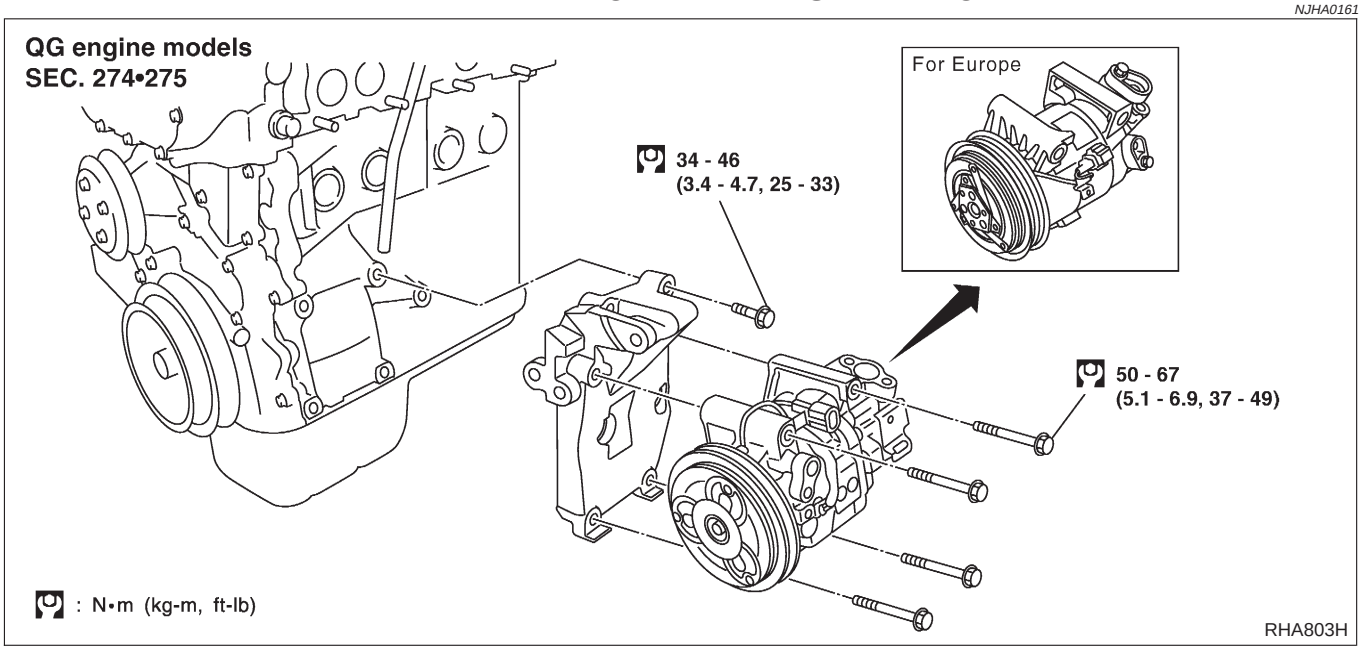

Compressor (Cont'd)

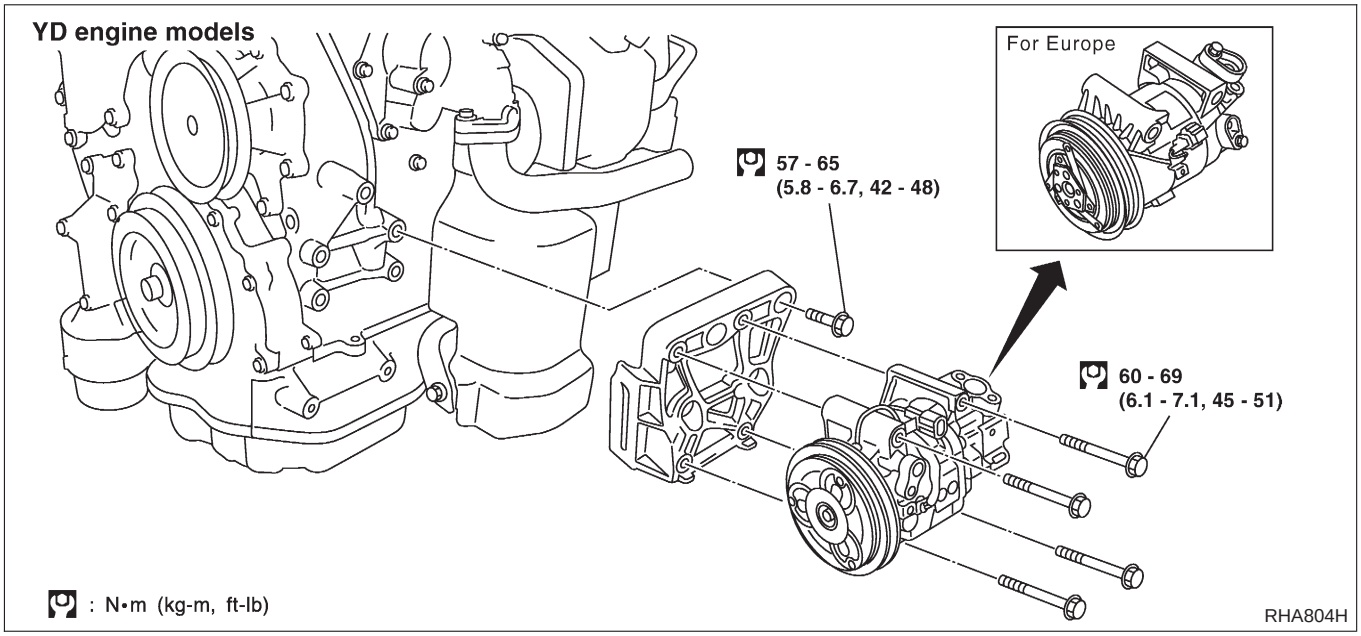

Compressor Clutch — CSV613 (CALSONIC make)

OVERHAUL

NJHA0211

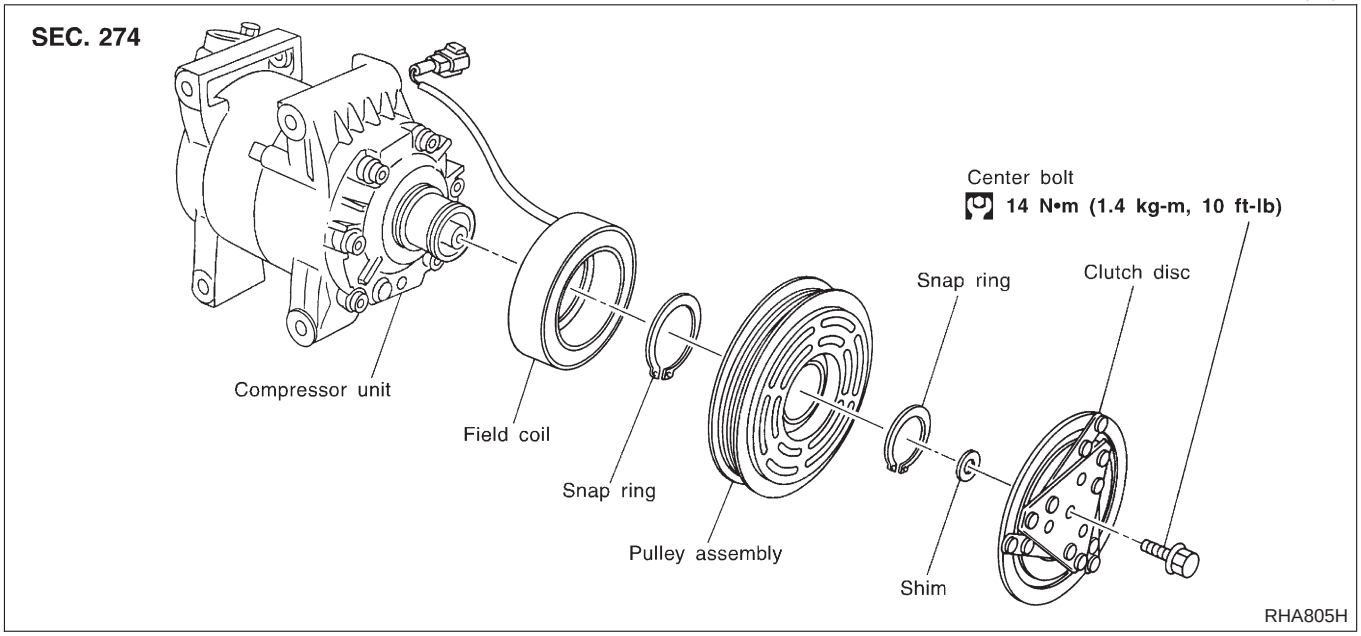

REMOVAL

NJHA0212

- When removing center bolt, hold clutch disc with clutch disc wrench.

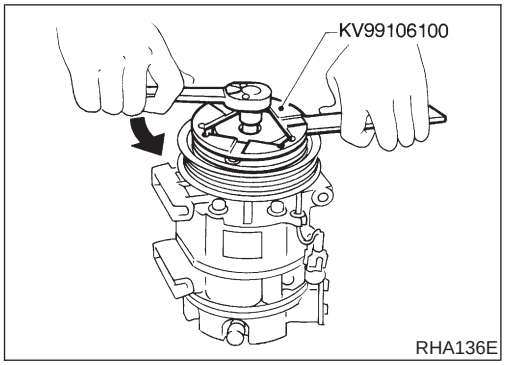

RHA136E

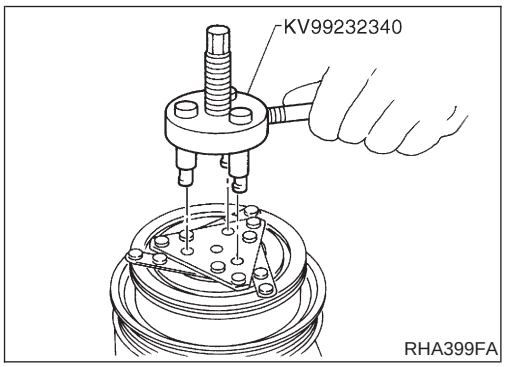

RHA399FA

- Remove the clutch disc using the clutch disc puller.
  Insert the holder's three pins into the holes in the clutch disc. Rotate the holder clockwise to hook it onto the plate. Then, tighten the center bolt to remove the clutch disc.
  After removing the clutch disc, remove the shims from either the drive shaft or the clutch disc.

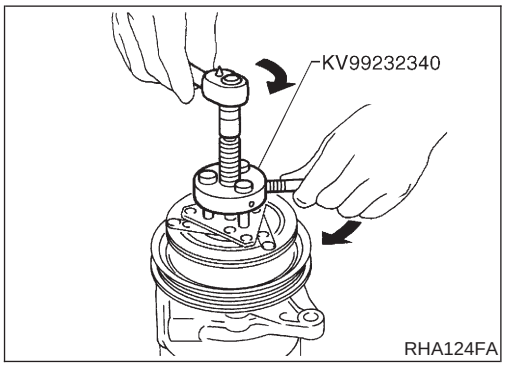

RHA124FA

- Remove the snap ring using external snap ring pliers.

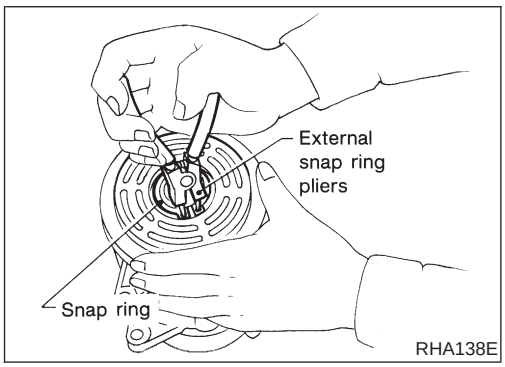

RHA138E

- Pulley removal
  Position the center pulley puller on the end of the drive shaft, and remove the pulley assembly using any commercially available pulley puller.
  To prevent the pulley groove from being deformed, the puller claws should be positioned onto the edge of the pulley assembly.

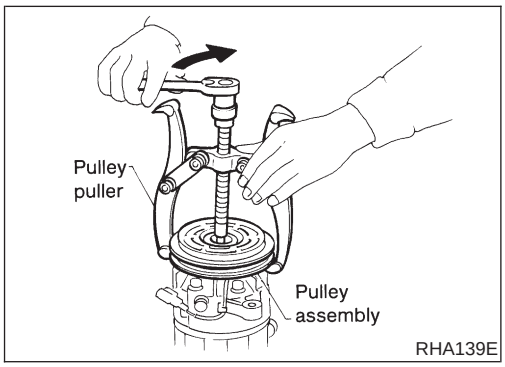

RHA139E

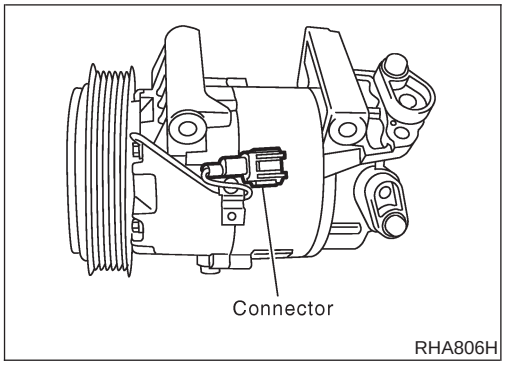

- Remove the connector from the connector bracket.

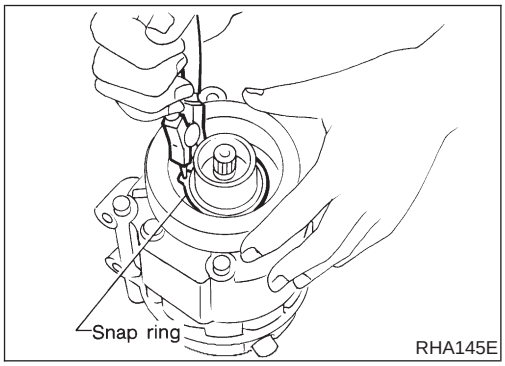

- Remove the snap ring using external snap ring pliers.

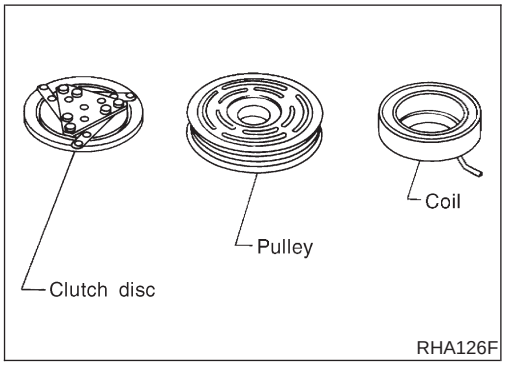

INSPECTION

NJHA0213

Clutch Disc

NJHA0213S01

If the contact surface shows signs of damage due to excessive heat, replace clutch disc and pulley.

Pulley

NJHA0213S02

Check the appearance of the pulley assembly. If the contact surface of pulley shows signs of excessive grooving, replace clutch disc and pulley. The contact surfaces of the pulley assembly should be cleaned with a suitable solvent before reinstallation.

Coil

NJHA0213S03

Check coil for loose connection or cracked insulation.

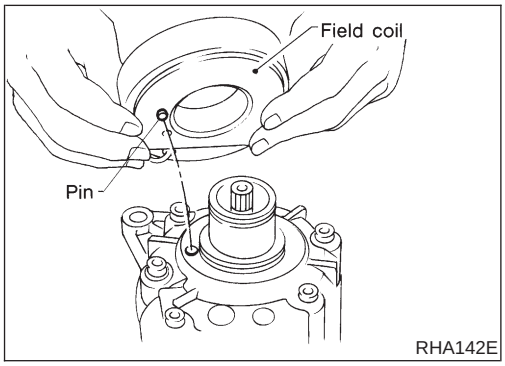

INSTALLATION

NJHA0214

- Install the field coil.
  Be sure to align the coil's pin with the hole in the compressor's front head.
- Install the field coil harness clip using a screwdriver.

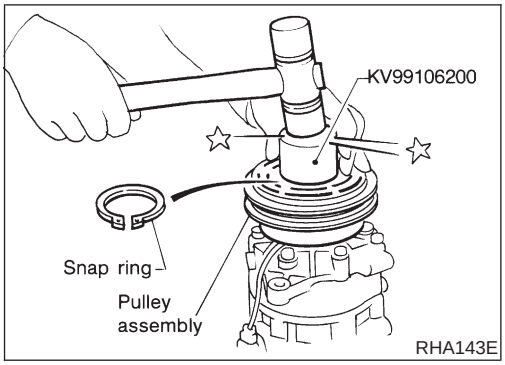

- Install the pulley assembly using the installer and a hand press, and then install the snap ring using snap ring pliers.

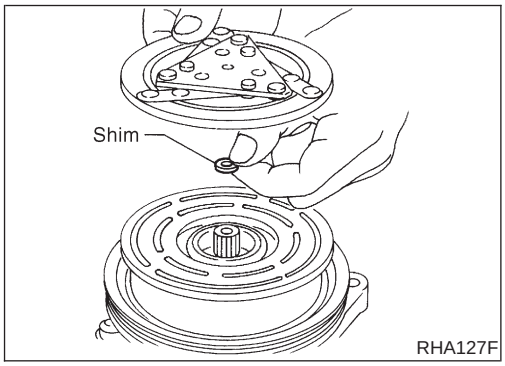

- Install the clutch disc on the drive shaft, together with the original shim(s). Press the clutch disc down by hand.

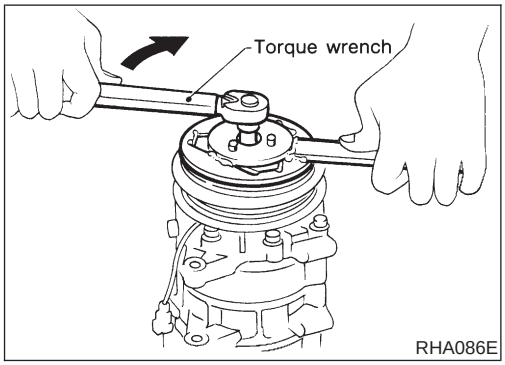

- Using the holder to prevent clutch disc rotation, tighten the bolt to 14 N·m (1.4 kg-m, 10 ft-lb) torque.
  After tightening the bolt, check that the pulley rotates smoothly.

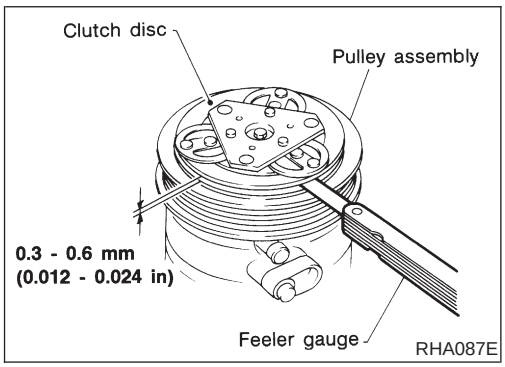

- Check clearance around the entire periphery of clutch disc.
  Disc-to-pulley clearance:
  0.3 - 0.6 mm (0.012 - 0.024 in)
  If the specified clearance is not obtained, replace adjusting spacer and readjust.

Break-in Operation

NJHA0214S01

When replacing compressor clutch assembly, always carry out the break-in operation. This is done by engaging and disengaging the clutch about thirty times. Break-in operation raises the level of transmitted torque.

Heater & Cooling Unit (Heater Core)

REMOVAL

NJHA0193

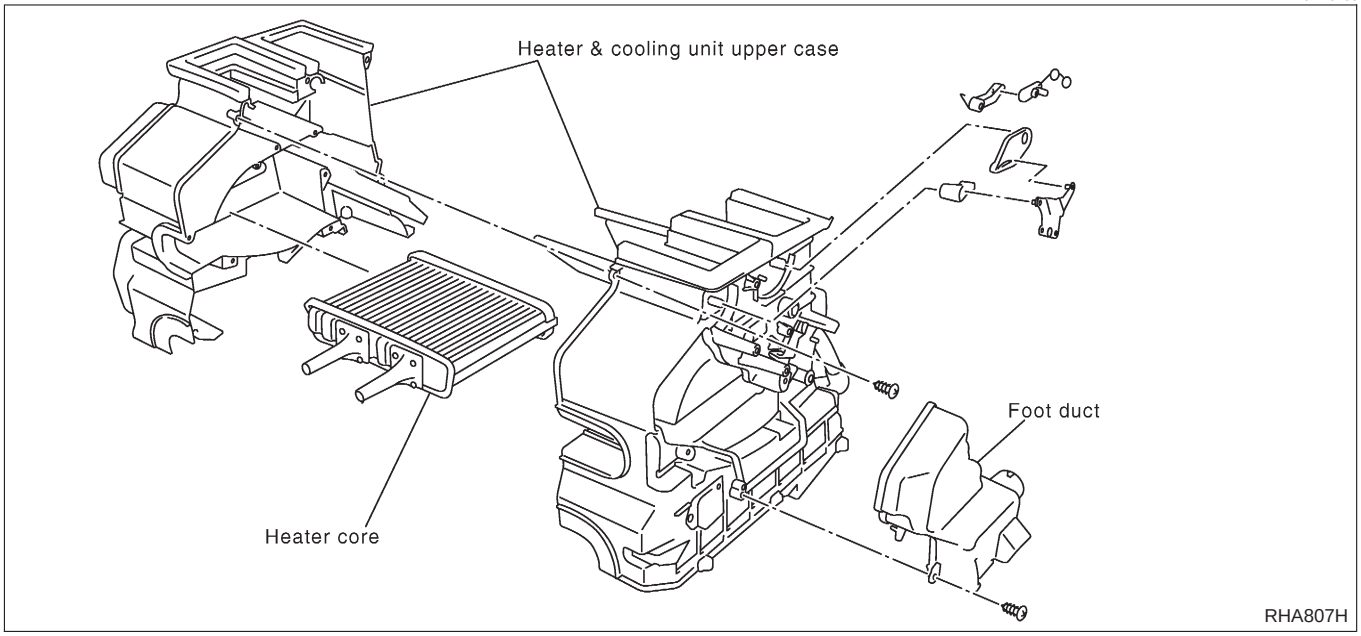

1. Drain the cooling system. Refer to LC-18 (QG), LC-44 (YD), “Changing Engine Coolant”.
2. Discharge the A/C system. Refer to HA-78.
3. Disconnect the two heater hoses from inside the engine compartment.
4. Remove the blower unit. Refer to HA-89.
5. Remove the steering member assembly. Refer to BT-25, “Instrument Panel Assembly”.
6. Remove the heater unit.
7. Separate the heater & cooling unit case, and remove the heater core.

INSTALLATION

NJHA0194

Install in the reverse order of removal.

When filling radiator with coolant, refer to LC-19 (QG), LC-45 (YD), “Refilling Engine Coolant”.

Recharge the A/C system. Refer to HA-78.

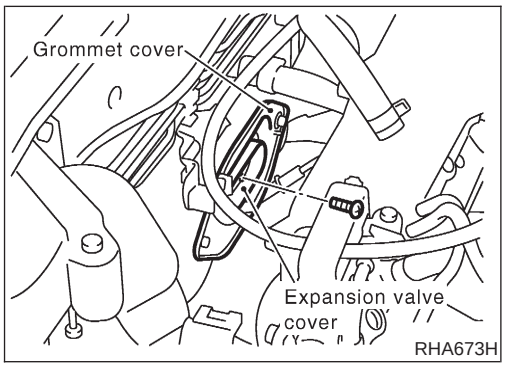

A/C Evaporator

REMOVAL

NJHA0204

1. Discharge the A/C system. Refer to HA-78.
2. Disconnect the two refrigerant lines from the engine compartment.
   Cap the A/C lines to prevent moisture from entering the system.
3. Remove the grommet cover, grommet and expansion valve cover from the engine compartment.
4. Remove the glove box, instrument lower assist panel, instrument lower cover and drink holder. Refer to BT-25.

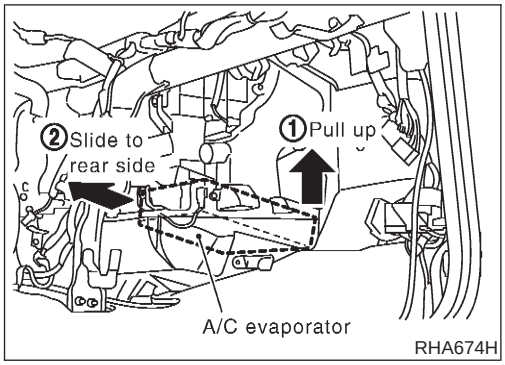

5. Remove the five screws fixed heater & cooling unit lower cover.
6. Slide the A/C evaporator to rear side.
7. Slide the heater & cooling unit lower cover to rear side and then remove it.
8. Slide the A/C evaporator to the front side and then remove the A/C evaporator.

INSTALLATION

NJHA0205

Install in the reverse order of removal.
Recharge the A/C system. Refer to HA-78.

Blower Unit

REMOVAL

NJHA0195

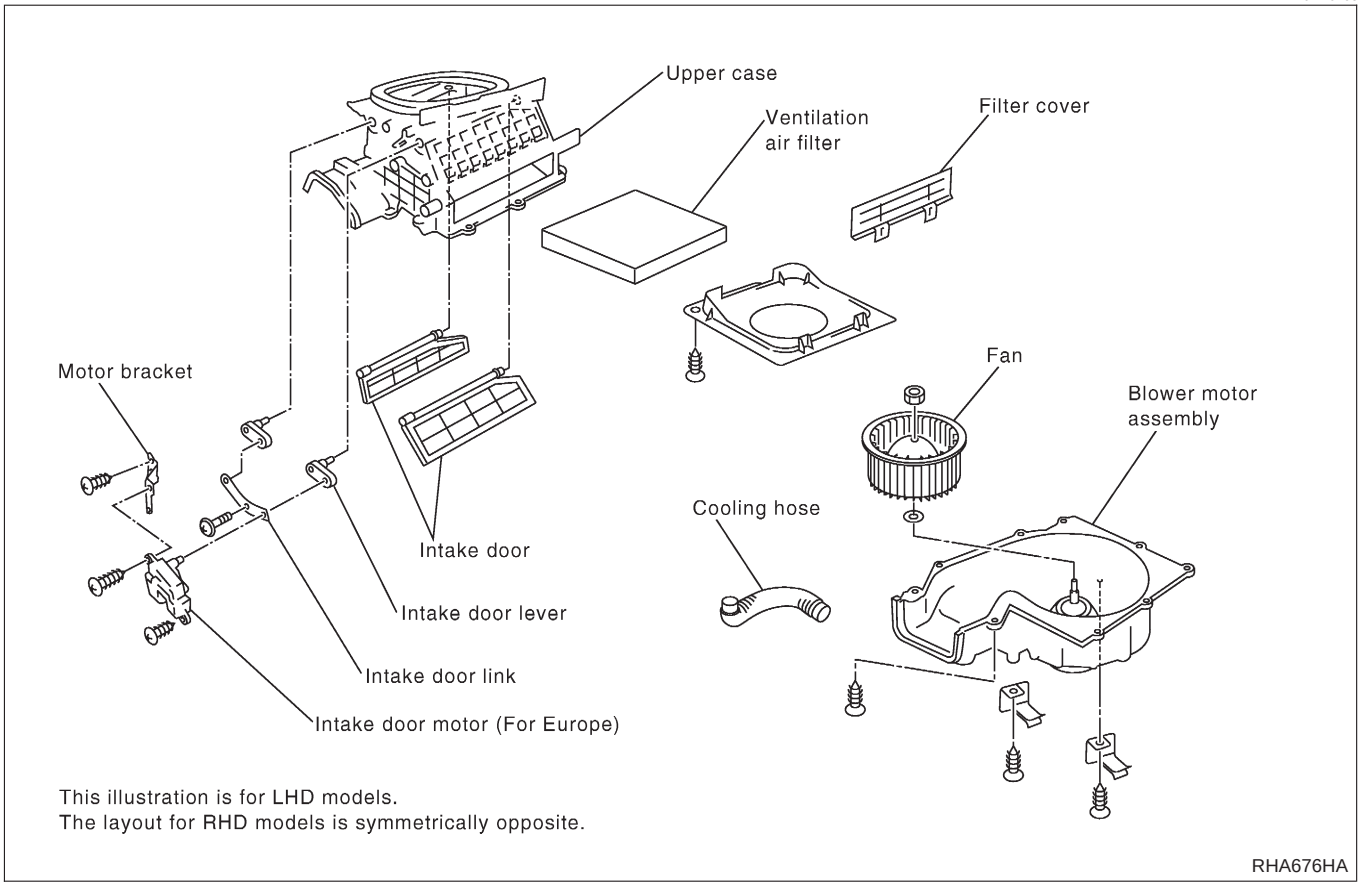

1. Remove the instrument panel assembly. Refer to BT-25, "Instrument Panel Assembly".
2. Disconnect the blower motor and resistor connector.
3. Remove blower unit.

INSTALLATION

NJHA0196

Install in the reverse order of removal.

Refrigerant Lines

REMOVAL AND INSTALLATION

=NJHA0167

- Refer to page HA-3 reading “Precautions for Refrigerant Connection”.

SEC. 271•274
LHD MODELS WITH QG ENGINE
The heater & cooling unit layout for RHD models is symmetrically opposite.

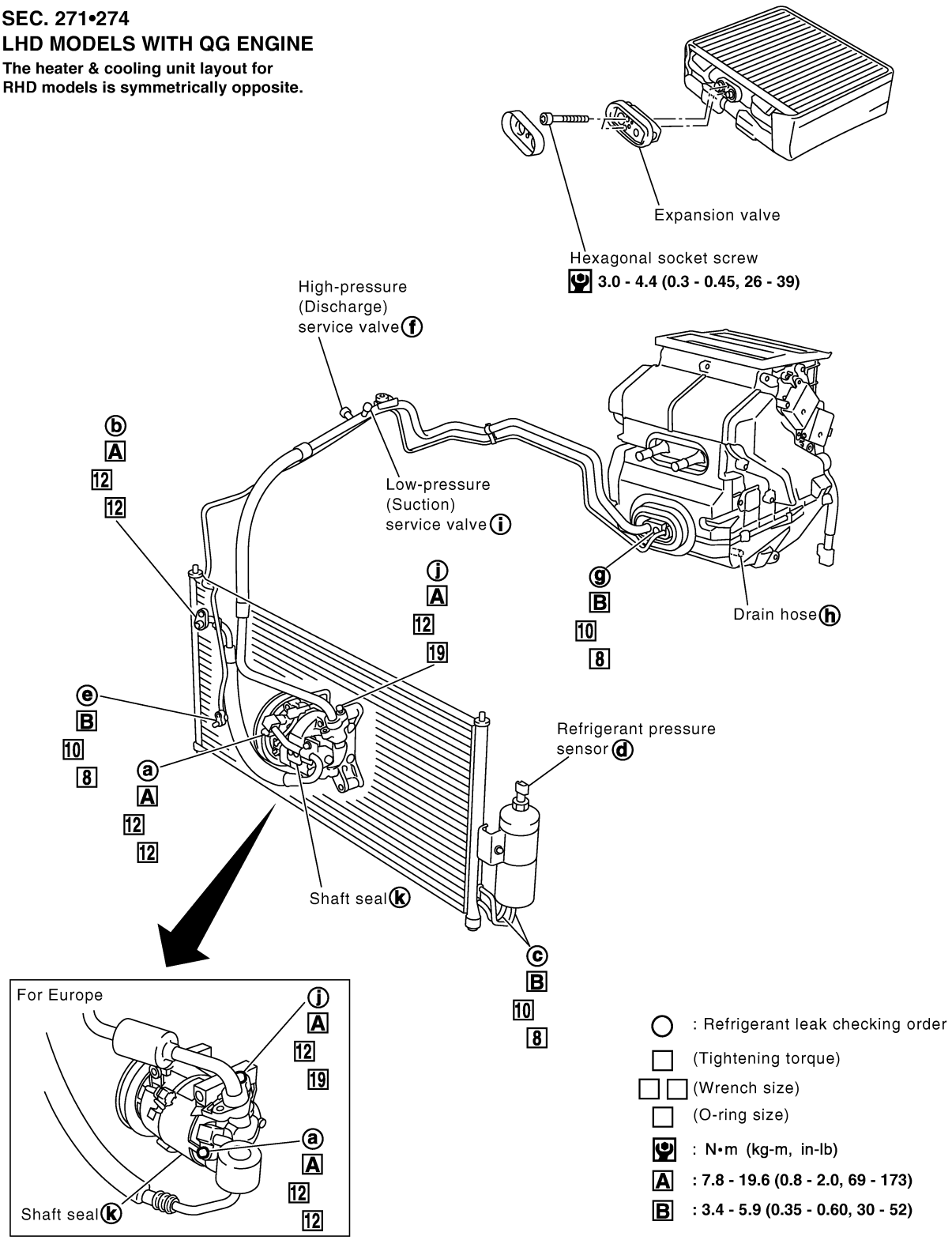

RHA808HA

SEC. 271•274
LHD MODELS WITH YD ENGINE

The heater & cooling unit layout for RHD models is symmetrically opposite.

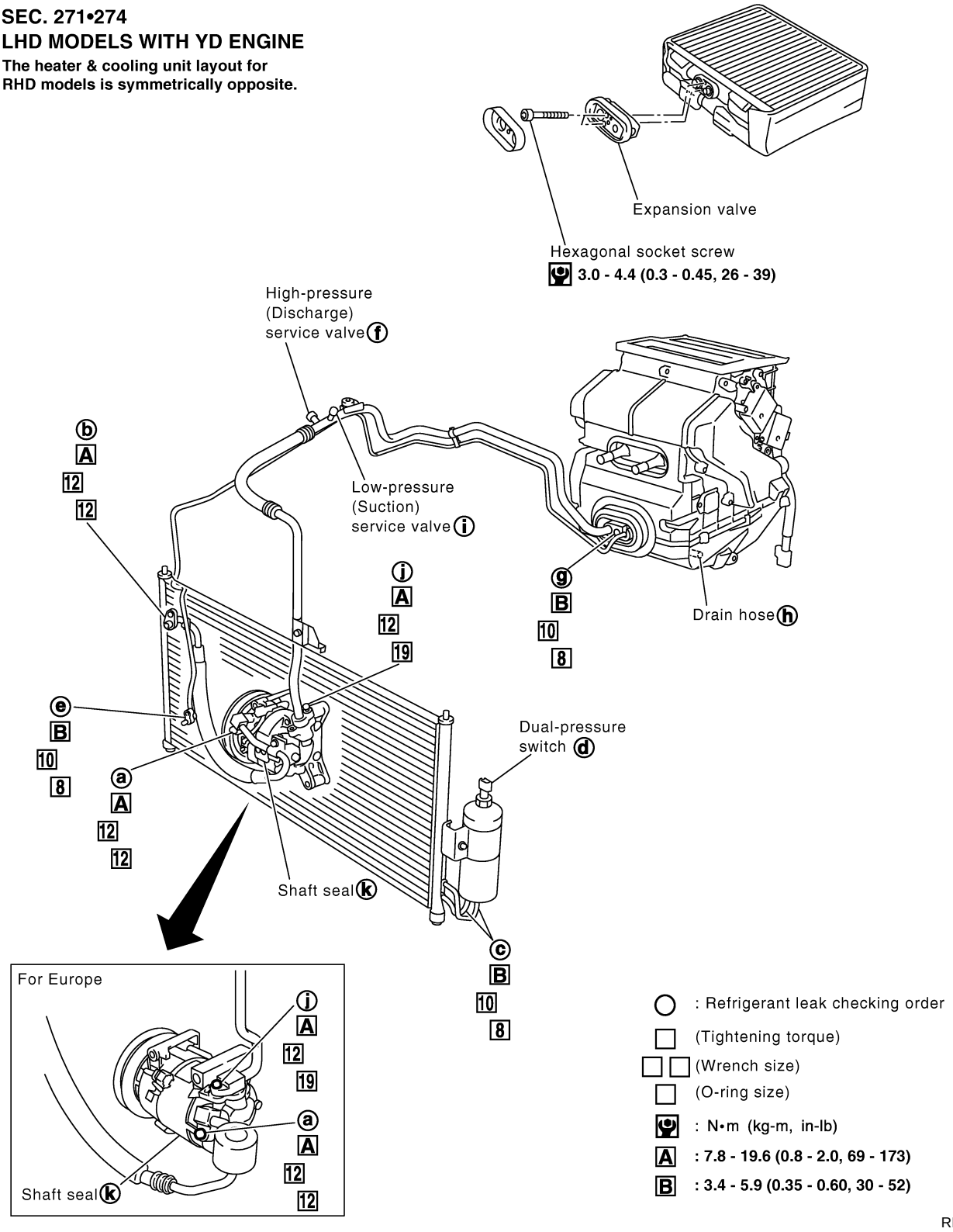

- Refer to page HA-3 regarding "Precautions for Refrigerant Connection".

CHECKING REFRIGERANT LEAKS

=NJHA0168

Preliminary Check

NJHA0168S01

Perform a visual inspection of all refrigeration parts, fittings, hoses, and components for signs of A/C lubricant leakage, damage and corrosion. Take note of the areas with A/C lubricant leakage to allow extra time in these areas with electronic leak detector.

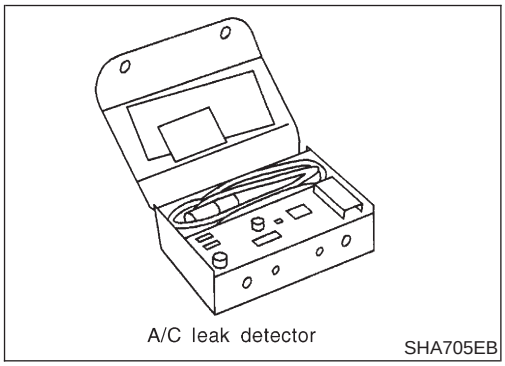

Precautions for Handling Leak Detector

NJHA0168S02

When performing a refrigerant leak check, use an A/C leak detector or equivalent. Ensure that the instrument is calibrated and set properly per the operating instructions.

The leak detector is a delicate device. In order to use the leak detector properly, read the operating instructions and perform any specified maintenance.

Other gases in the work area or substances on the A/C components, for example, anti-freeze, windshield washer fluid, solvents and lubricants, may falsely trigger the leak detector. Make sure the surfaces to be checked are clean. Clean with a dry cloth or blow off with shop air. Do not allow the sensor tip of the detector to contact with any substance. This can also cause false readings and may damage the detector.

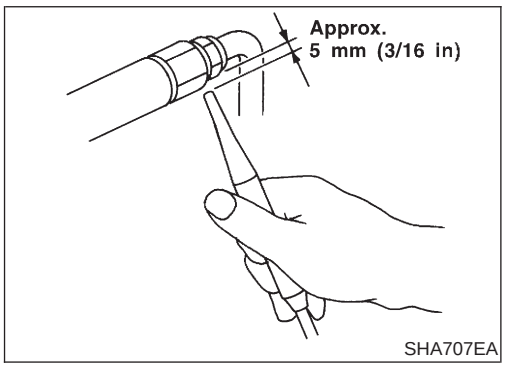

1. Position probe approximately 5 mm (3/16 in) away from point to be checked.

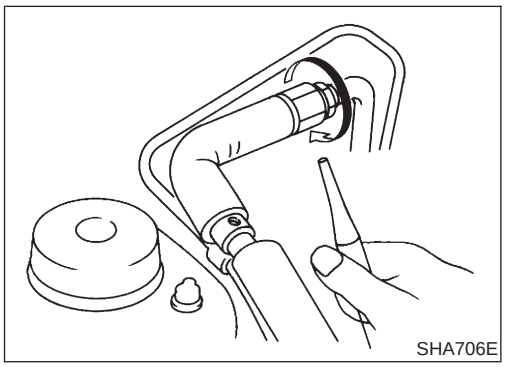

2. When testing, circle each fitting completely with probe.

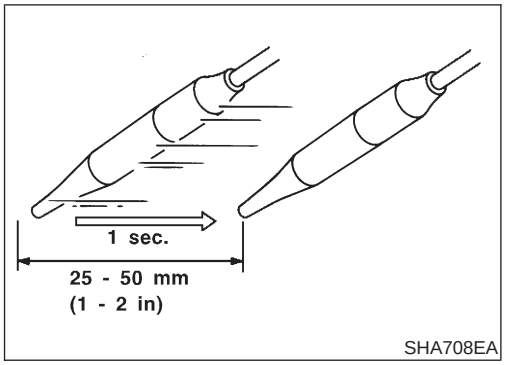

3. Move probe along component approximately 25 to 50 mm (1 to 2 in)/sec.

Checking Procedure

NJHA0168S03

To prevent inaccurate or false readings, make sure there is no refrigerant vapor, shop chemicals, or cigarette smoke in the vicinity of the vehicle. Perform the leak test in calm area (low air/wind movement) so that the leaking refrigerant is not dispersed.

1. Turn engine off.
2. Connect a suitable A/C manifold gauge set to the A/C service ports.
3. Check if the A/C refrigerant pressure is at least 345.2 kPa (3.45 bar, 3.52 kg/cm^2, 50.1 psi) above 16°C (61°F). If less than specification, recover/evacuate and recharge the system with the specified amount of refrigerant.

NOTE:
At temperatures below 16°C (61°F), leaks may not be detected since the system may not reach 345.2 kPa (3.45 bar, 3.52 kg/cm^2, 50.1 psi).

4. Conduct the leak test from the high side (compressor discharge **a** to evaporator inlet **g**) to the low side (evaporator drain hose **h** to shaft seal **k**). Refer to HA-91. Perform a leak check for the following areas carefully. Clean the component to be checked and move the leak detector probe completely around the connection/component.

- **Compressor**
  Check the fitting of high and low pressure hoses, relief valve and shaft seal.
- **Liquid tank**
  Check the pressure switch, refrigerant pressure sensor, tube fitting, weld seams and the fusible plug mount.
- **Service valves**
  Check all around the service valves. Ensure service valve caps are secured on the service valves (to prevent leaks).

NOTE:
After removing A/C manifold gauge set from service valves, wipe any residue from valves to prevent any false readings by leak detector.

- **Cooling unit (Evaporator)**
  With engine OFF, turn blower fan on "High" for at least 15 seconds to dissipate any refrigerant trace in the cooling unit. Wait a minimum of 10 minutes accumulation time (refer to the manufacturer's recommended procedure for actual wait time) before inserting the leak detector probe into the drain hose. Keep the probe inserted for at least ten seconds. Use caution not to contaminate the ptobe tip with water or dirt that may be in the drain hose.

5. If a leak detector detects a leak, verify at least once by blowing compressed air into area of suspected leak, then repeat check as outlined above.
6. Do not stop when one leak is found. Continue to check for additional leaks at all system components.
   If no leaks are found, perform steps 7 - 10.
7. Start engine.
8. Set the heater A/C control as follows:

1) A/C switch ON.
2) Face mode
3) Recirculation position
4) Max cold temperature
5) Fan speed high

9. Run engine at 1,500 rpm for at least 2 minutes.
10. Turn engine off and perform leak check again following steps 4 through 6 above.

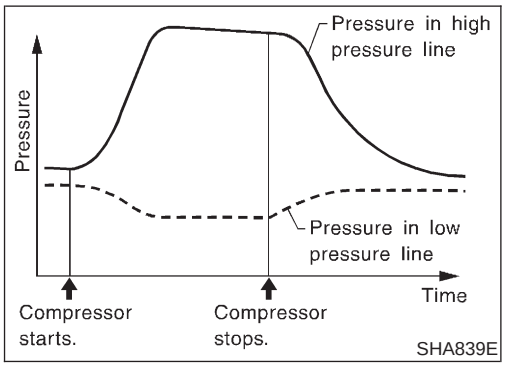

Refrigerant leaks should be checked immediately after stopping the engine. Begin with the leak detector at the compressor. The pressure on the high pressure side will gradually drop after refrigerant circulation stops and pressure on the low pressure side will gradually rise, as shown in the graph. Some leaks are more easily detected when pressure is high.

11. Discharge A/C system using approved refrigerant recovery equipment. Repair the leaking fitting or component as necessary.
12. Evacuate and recharge A/C system and perform the leak test to confirm no refrigerant leaks.
13. Conduct A/C performance test to ensure system works properly.

Belt

TENSION ADJUSTMENT

NJHA0169

- **Refer to EM-16 (QG), EM-85 (YD), "Checking Drive Belt".**

Idle Air Control Valve (IACV) — Auxiliary Air Control (AAC) Valve

INSPECTION

NJHA0199

- **Refer to EC-376 (QG), “System Description”.**

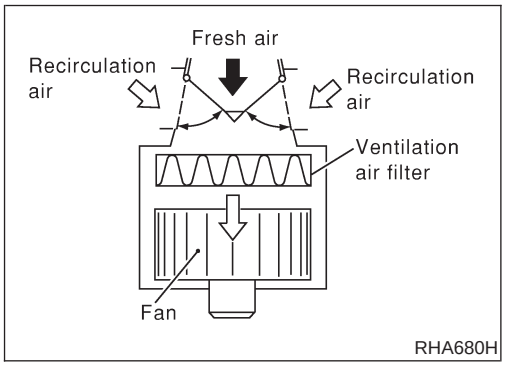

RHA680H

Ventilation Air Filter

FUNCTION

NJHA0171

Air inside passenger compartment is kept clean at either recirculation or fresh mode by installing ventilation air filter into cooling unit.

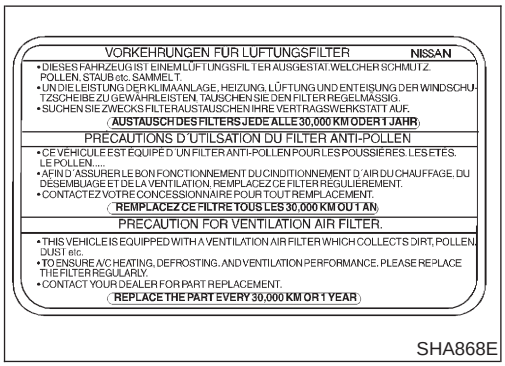
VORKEHRUNGEN FÜR LÜFTUNGSFILTER NISSAN
• DIESES FAHRZEUG IST EINEM LÜFTUNGSFILTER AUSGESTAT. WELCHER SCHMUTZ, POLLEN, STAUB etc. SAMMELT.
• UN DIE LEISTUNG DER KLIMAANLAGE, HEIZUNG, LÜFTUNG UND ENTEISUNG DER WINDSCHUTZSCHEIBE ZU GEWÄHRLEISTEN, TAUSCHEN SIE DEN FILTER REGELMÄSSIG.
• SUCHEN SIE ZWECKS FILTERAUSTAUSCHEN IHRE VERTRAGSWERKSTATT AUF.
(AUSTAUSCH DES FILTERS JEDE ALLE 30,000 KM ODER 1 JAHR)
PRECAUTIONS D´UTILSATION DU FILTER ANTI-POLLEN
• CE VEHICULE EST ÉQUIPÉ D´UN FILTER ANTI-POLLEN POUR LES POUSSIÈRES, LES ETÉS, LE POLLEN.....
• AFIN D´ASSURER LE BON FONCTIONNEMENT DU CINDITIONNEMENT D´AIR DU CHAUFFAGE, DU DÉSEMBUAGE ET DE LA VENTILATION, REMPLACEZ CE FILTER REGULIÈREMENT.
• CONTACTEZ VOTRE CONCESSIONNAIRE POUR TOUT REMPLACEMENT.
(REMPLACEZ CE FILTRE TOUS LES 30,000 KM OU 1 AN)
PRECAUTION FOR VENTILATION AIR FILTER.
• THIS VEHICLE IS EQUIPPED WITH A VENTILATION AIR FILTER WHICH COLLECTS DIRT, POLLEN, DUST etc.
• TO ENSURE A/C HEATING, DEFROSTING, AND VENTILATION PERFORMANCE, PLEASE REPLACE THE FILTER REGULARLY.
• CONTACT YOUR DEALER FOR PART REPLACEMENT.
(REPLACE THE PART EVERY 30,000 KM OR 1 YEAR)
SHA868E

REPLACEMENT TIMING

NJHA0172

Replace ventilation air filter.
Refer to MA-4, “PERIODIC MAINTENANCE”.
Caution label is fixed inside the glove box.

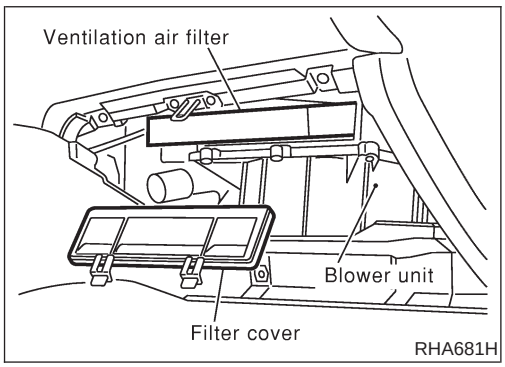

RHA681H

REPLACEMENT PROCEDURE

NJHA0173

- Remove glove box.
- Remove filter cover.
- Take out the ventilation air filter from blower unit.
- Replace with new one and reinstall on blower unit.
- Reinstall glove box.

Compressor

NJHA0174

Model	CALSONIC make CSV613
Type	Swash plate (Variable displacement)
Displacement cm^3 (cu in)/rev.	6.0 - 125 (0.37 - 7.63)
Direction of rotation	Clockwise (viewed from drive end)
Drive belt	QG engine model: Poly V YD engine model: Type A

Lubricant

NJHA0175

Model		CALSONIC make CSV613
Name		Nissan A/C System Oil Type S
Part number		KLH00-PAGS0
Capacity mℓ (Imp fl oz)	Total in system	180 - 200 (6.3 - 7.0)
	Compressor (Service part) charging amount	180 - 200 (6.3 - 7.0)

Refrigerant

NJHA0176

Type	HFC-134a (R-134a)
Capacity kg (lb)	0.45 - 0.55 (0.99 - 1.21)

Engine Idling Speed (When A/C is On)

NJHA0177

- **Refer to EC-593 (QG), EC-834 (YD), “Idle Speed and Ignition Timing”.**

Belt Tension

NJHA0178

- **Refer to EM-16 (QG), EM-85 (YD), “Checking Drive Belts”.**