AUTOMATIC TRANSAXLE SYSTEM

PRECAUTION

NOTICE:

- **Perform the RESET MEMORY (AT initialization) when replacing the automatic transaxle assembly, engine assembly or ECM (See page AX-16).**
- **Perform the REGISTRATION (VIN registration) when replacing the ECM (See page ES-16).**

HINT:
RESET MEMORY can not be completed by only disconnecting the battery cable.

1. **EXPRESSION OF IGNITION SWITCH**
   The type of ignition switch used on this model differs according to the specifications of the vehicle.
   The expressions listed in the table below are used in this section.

Switch Type / Expression	Ignition Switch (Position)	Engine Switch (Condition)
Ignition switch off	LOCK	Off
Ignition switch on (IG)	ON	On (IG)
Ignition switch on (ACC)	ACC	On (ACC)
Engine start	START	Start

H

E116900E03

2. **The automatic transaxle is composed of highly precision-finished parts which need careful inspection before reassembly. Even a small nick could cause fluid leakage or affect the performance. The instructions here are organized so that you work on only one component group at a time. This will help avoid confusion caused by similar-looking parts of different sub-assemblies being on your workbench at the same time. The component groups are inspected and repaired from the converter housing side. Complete the inspection, repair and**

cardiagn.com

reassembly before proceeding to the next component group as much as possible. If a defect is found in a certain component group during reassembly, inspect and repair this group immediately. If a component group cannot be assembled because some parts are being ordered, be sure to keep all parts of the group in a separate container while proceeding with disassembly, inspection, repair and reassembly of other component groups. Recommended: ATF WS

3. **All disassembled parts should be washed clean and any fluid passages and holes should be blown through with compressed air.**
4. **Dry all parts with compressed air. Never use a shop rag or a piece of cloth to dry them.**
5. **When using compressed air, always aim away from yourself to prevent accidentally spraying ATF or kerosene in your face.**
6. **Only recommended automatic transaxle fluid or kerosene should be used for cleaning.**
7. **After cleaning, the parts should be arranged in the correct order for efficient inspection, repair, and reassembly.**
8. **When disassembling a valve body, be sure to match each valve together with the corresponding spring.**
9. **New discs for the brakes and clutches that are to be used for replacement must be soaked in ATF for at least 15 minutes before reassembly.**
10. **All oil seal rings, clutch discs, clutch plates, rotating parts, and sliding surfaces should be coated with ATF prior to reassembly.**
11. **All gaskets and rubber O-rings should be replaced with new ones.**
12. **Do not apply adhesive cements to gaskets and similar parts.**
13. **Make sure that the ends of a snap ring are not aligned with one of the cutouts and are installed in the groove correctly.**
14. **When replacing a worn bushing, the sub-assembly containing the bushing must also be replaced.**
15. **Check thrust bearings and races for wear or damage. Replace them as necessary.**
16. **When working with FIPG material, you must observe the following:**
    - Using a razor blade and a gasket scraper, remove all the old packing (FIPG) material from the gasket surface.
    - Thoroughly clean all components to remove any loose material.
    - Clean both sealing surfaces with a non-residue solvent.

cardiagn.com

- Parts must be reassembled within 10 minutes of application. Otherwise, the packing (FIPG) material must be removed and reapplied.

cardiagn.com

DEFINITION OF TERMS

Term	Definition
Monitor description	Description of what the ECM monitors and how it detects malfunctions (monitoring purpose and its details).
Related DTCs	Diagnostic code
Typical enabling condition	Preconditions that allow the ECM to detect malfunctions. With all preconditions satisfied, the ECM sets the DTC when the monitored value(s) exceeds the malfunction threshold(s).
Sequence of operation	The priority order that is applied to monitoring, if multiple sensors and components are used to detect the malfunction. While another sensor is being monitored, the next sensor or component will not be monitored until the previous monitoring has concluded.
Required sensor/components	The sensors and components that are used by the ECM to detect malfunctions.
Frequency of operation	The number of times that the ECM checks for malfunctions per driving cycle. "Once per driving cycle" means that the ECM detects malfunction only one time during a single driving cycle. "Continuous" means that the ECM detects malfunction every time when enabling condition is met.
Duration	The minimum time that the ECM must sense a continuous deviation in the monitored value(s) before setting a DTC. This timing begins after the "typical enabling conditions" are met.
Malfunction thresholds	Beyond this value, the ECM will conclude that there is a malfunction and set a DTC.
MIL operation	MIL illumination timing after a defect is detected. "Immediately" means that the ECM illuminates MIL the instant the ECM determines that there is a malfunction. "2 driving cycle" means that the ECM illuminates MIL if the same malfunction is detected again in the 2nd driving cycle.
Component operating range	Normal operation range of sensors and solenoids under normal driving conditions. Use these ranges as a reference. They cannot be used to judge if a sensor or solenoid is defective or not.

cardiagn.com

PARTS LOCATION

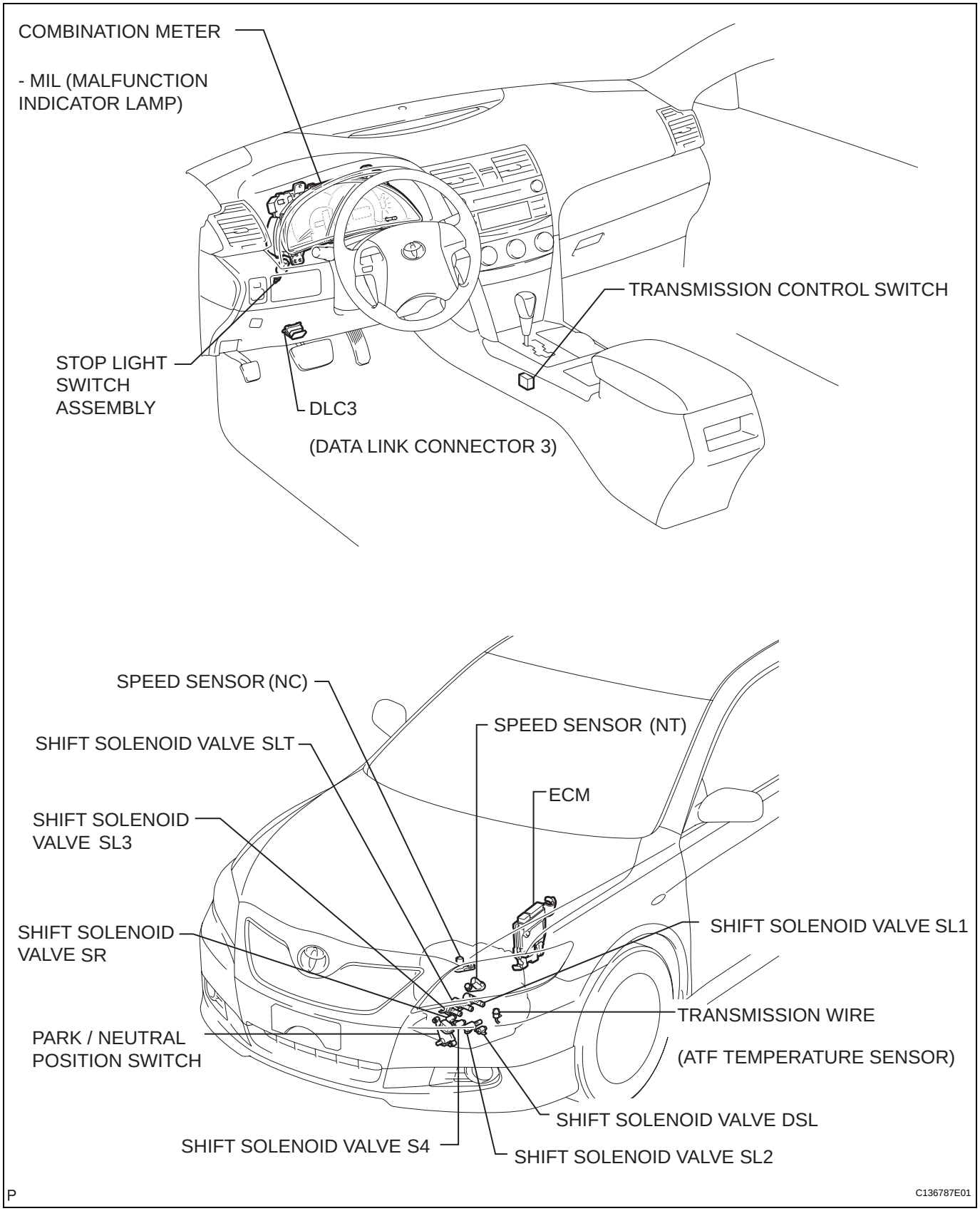

cardiagn.com

SYSTEM DIAGRAM

The configuration of the electronic control system in the U250E automatic transaxles is as shown in the following chart.

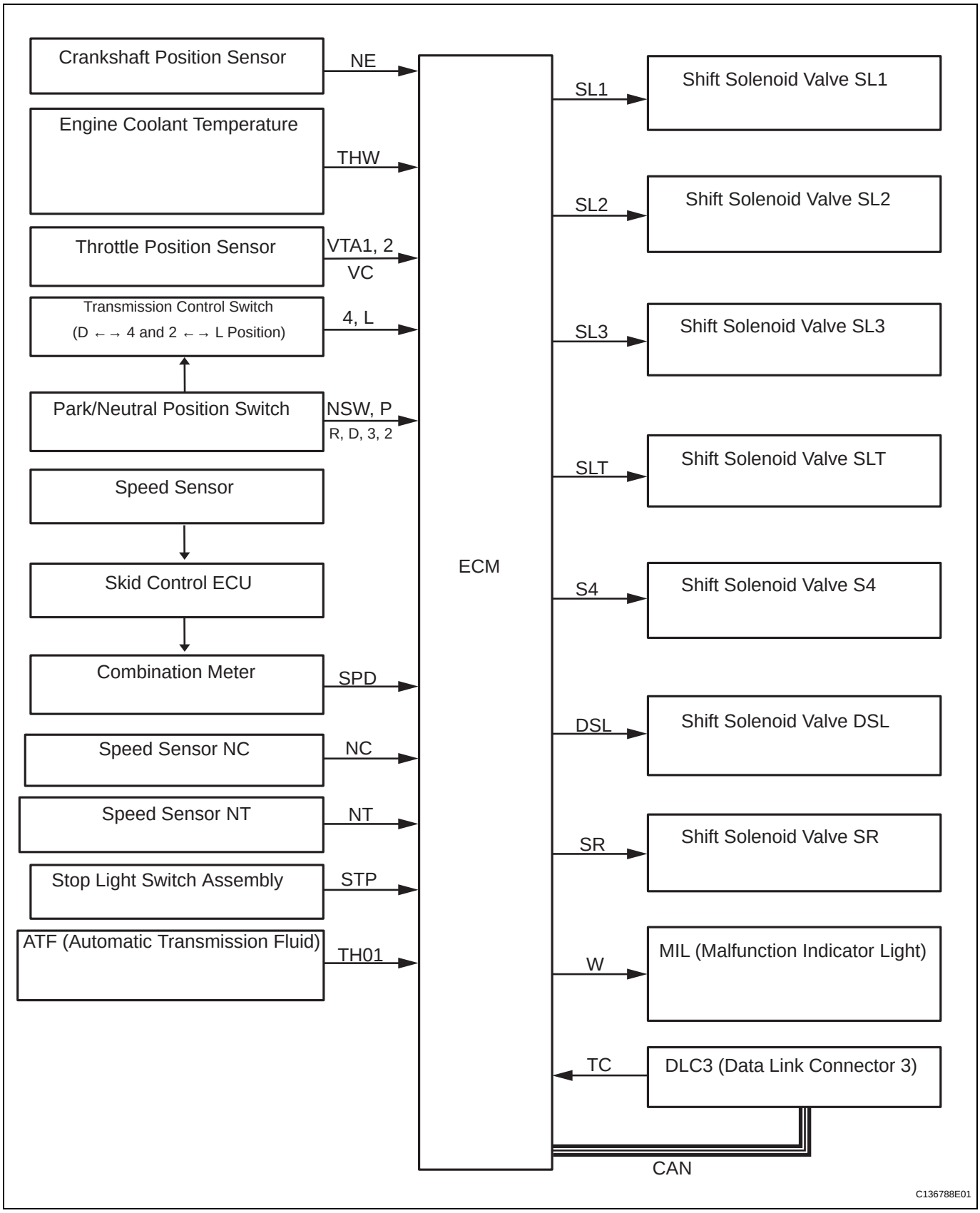

cardiagn.com

SYSTEM DESCRIPTION

1. SYSTEM DESCRIPTION

(a) The ECT (Electronic controlled automatic transmission/transaxle) is an automatic transmission/transaxle that electronically controls shift timing using the ECM. The ECM detects electrical signals that indicate engine and driving conditions, and controls the shift point, based on driver habits and road conditions. As a result, fuel efficiency and power transmission performance are improved.

Shift shock has been reduced by controlling the engine and transmission simultaneously.

In addition, the ECT has features such as follows:

- Diagnostic function.
- Fail-safe function when a malfunction occurs.

cardiagn.com

HOW TO PROCEED WITH TROUBLESHOOTING

HINT:
- The ECM of this system is connected to the CAN and multiplex communication system. Therefore, before starting troubleshooting, make sure to check that there is no trouble in the CAN and multiplex communication systems.
- The intelligent tester can be used at steps 3, 4, 6, and 9.

1	**Vehicle Brought to Workshop**

NEXT

2	**Customer Problem Analysis**

NEXT

3	**Connect the OBD II scan tool or intelligent tester to DLC3**

NEXT

4	**Check and Clear DTCs and Freeze Frame Data**

HINT:
(See page AX-28).

NEXT

5	**Visual Inspection**

NEXT

6	**Setting the Check Mode Diagnosis**

HINT:
(See page AX-29).

NEXT

7	**Problem Symptom Confirmation**

HINT:
(See page AX-9).

Symptom does not occur: Go to step 8

cardiagn.com

Symptom occurs: Go to step 9

8	Symptom Simulation

HINT:
(See page IN-45).

NEXT

9	DTC Check

HINT:
(See page AX-28).

DTC is not output: Go to step 10

DTC is output: Go to step 17

10	Basic Inspection

HINT:
(See page AX-123, AX-129 and AX-182).

NG **Go to step 19**

OK

11	Mechanical System Test

HINT:
(See page AX-12).

NG **Go to step 16**

OK

12	Hydraulic Test

HINT:
(See page AX-14).

NG **Go to step 16**

OK

13	Manual Shifting Test

HINT:
(See page AX-15).

NG **Go to step 15**

cardiagn.com

OK

14	Problem Symptoms Table Chapter 1

HINT:
(See page AX-19).

NG → Go to step 18

OK

15	Problem Symptoms Table Chapter 2

HINT:
(See page AX-19).

NEXT

16	Part Inspection

→ Go to step 19

17	DTC Chart

HINT:
(See page AX-35).

NEXT

18	Circuit Inspection

NEXT

19	Repair or Replace

NEXT

20	Confirmation Test

NEXT

End

cardiagn.com

ROAD TEST

1. PROBLEM SYMPTOM CONFIRMATION

(a) Based on the result of the customer problem analysis, try to reproduce the symptoms. If the problem is that the transaxle does not shift up, shift down, or the shift point is too high or too low, conduct the following road test referring to the automatic shift schedule and simulate the problem symptoms.

2. ROAD TEST

NOTICE:

Perform the test at the ATF (Automatic Transmission Fluid) temperature 50 to 80°C (122 to 176°F) in the normal operation.

(a) D position test:

Shift into the D position and fully depress the accelerator pedal and check the following points.

(1) Check up-shift operation.

Check that 1 → 2, 2 → 3, 3 → 4 and 4 → 5th up-shifts take place, and that the shift points conform to the automatic shift schedule (See page SS-40).

HINT:

5th Gear Up-shift Prohibition Control

- Engine coolant temperature is 55°C (131°F) or less and vehicle speed is at 70 km/h (43 mph) or less.
- ATF temperature is -2°C (28°F) or less.

5th and 4th Gear Lock-up Prohibition Control

- Brake pedal is depressed.
- Accelerator pedal is released.
- Engine coolant temperature is 60°C (140°F) or less.

(2) Check for shift shock and slip.

Check for shock and slip at the 1 → 2, 2 → 3, 3 → 4 and 4 → 5th up-shifts.

(3) Check for abnormal noise and vibration.

Check for abnormal noise and vibration when up-shifting from 1 → 2, 2 → 3, 3 → 4, and 4 → 5 while driving with the shift lever in the D position, and also check while driving in the lock-up condition.

HINT:

The check for the cause of abnormal noise and vibration must be done thoroughly as it could also be due to loss of balance in the differential, torque converter clutch, etc.

(4) Check kick-down operation.

Check vehicle speeds when the 2nd to 1st, 3rd to 2nd, 4th to 3rd, and 5th to 4th kick-downs take place while driving with the shift lever in the D position. Confirm that each speed is within the applicable vehicle speed range indicated in the automatic shift schedule (See page SS-40).

cardiagn.com

(5) Check abnormal shock and slip at kick-down.
(6) Check the lock-up mechanism.
- Drive in D position (5th gear), at a steady speed (lock-up ON).
- Lightly depress the accelerator pedal and check that the engine speed does not change abruptly.

HINT:
- There is no lock-up in the 1st and 2nd gear.
- 4th lock-up operates while uphill-downhill is active in the D position.
- If there is a big jump in engine speed, there is no lock-up.

(b) 4 (O/D OFF) position test:
Shift into the 4 position and fully depress the accelerator pedal and check the following points.
(1) Check up-shift operation.
Check that the 1 → 2, 2 → 3 and 3 → 4 up-shift take place and that the shift point conforms to the automatic shift schedule (See page SS-40).
HINT:
There is no 5th up-shift in the 4 position.
(2) Check engine braking.
While driving in the 4 position and 4th gear, release the accelerator pedal and check the engine braking effect.
(3) Check for abnormal noise during acceleration and deceleration, and for shock at up-shift and down-shift.

(c) 3 position test:
Shift into the 3 position and fully depress the accelerator pedal and check the following points.
(1) Check up-shift operation.
Check that the 1 → 2 and 2 → 3 up-shift take place and that the shift point conforms to the automatic shift schedule (See page SS-40).
HINT:
There is no 4th up-shift and lock-up in the 3 position.
(2) Check engine braking.
While running in the 3 position and 3rd gear, release the accelerator pedal and check the engine braking effect.
(3) Check for abnormal noise during acceleration and deceleration, and for shock at up-shift and down-shift.

cardiagn.com

(d) 2 position test:
Shift into the 2 position and fully depress the accelerator pedal and check the following points.
(1) Check up-shift operation.
Check that the 1 →2 up-shift takes place and that the shift point conforms to the automatic shift schedule (See page SS-40).
HINT:
There is no 3rd up-shift and lock-up in the 2 position.
(2) Check engine braking.
While running in the 2 position and 2nd gear, release the accelerator pedal and check the engine braking effect.
(3) Check for abnormal noise during acceleration and deceleration, and for shock at up-shift and down-shift.

(e) L position test:
Shift into the L position and fully depress the accelerator pedal and check the following points.
(1) Check no up-shift.
While running in the L position, check that there is no up-shift to 2nd gear.
HINT:
There is no lock-up in the L position.
(2) Check engine braking.
While running in the L position, release the accelerator pedal and check the engine braking effect.
(3) Check for abnormal noise during acceleration and deceleration.

(f) R position test:
Shift into the R position, lightly depress the accelerator pedal, and check that the vehicle moves backward without any abnormal noise or vibration.
CAUTION:
Before conducting this test ensure that the test area is free from people and obstruction.

(g) P position test:
Stop the vehicle on the grade (more than 5°) and after shifting into the P position, release the parking brake. Then, check that the parking lock pawl holds the vehicle in place.

(h) Uphill/downhill control function test:
(1) Check that the gear does not up-shift to the 4th or 5th gear while the vehicle is driving uphill.
(2) Check that the gear automatically down-shifts from 5th to 4th or from the 4th to 3rd gear when brake is applied while the vehicle is driving downhill.

cardiagn.com

MECHANICAL SYSTEM TESTS

1. PERFORM MECHANICAL SYSTEM TESTS

(a) Measure the stall speed.

The object of this test is to check the overall performance of the transaxle and engine by measuring the stall speeds in the D position.

NOTICE:

- **Driving test should be done on a paved road (a nonskid road).**
- **Perform the test at the normal operating ATF (Automatic Transmission Fluid) temperature 50 to 80°C (122 to 176°F).**
- **Do not continuously run this test for longer than 10 seconds.**
- **To ensure safety, do this test in a wide, clear level area which provides good traction.**
- **The stall test should always be carried out in pairs. One technician should observe the conditions of wheels or wheel stoppers outside the vehicle while the other is doing the test.**

(1) Chock the 4 wheels.
(2) Connect the intelligent tester to the DLC3.
(3) Fully apply the parking brake.
(4) Keep your left foot pressed firmly on the brake pedal.
(5) Start the engine.
(6) Shift into the D position. Press all the way down on the accelerator pedal with your right foot.
(7) Quickly read the stall speed at this time.

Stall speed:
2,310 +- 150 rpm

Evaluation:

Problem	Possible cause
(a) Stall engine speed is low in D position	• Engine power output may be insufficient • Stator one-way clutch not operating properly HINT: If the value is less than the specified value by 600 rpm or more, the torque converter could be faulty.
(b) Stall engine speed is high in D position	• Line pressure is too low • Forward clutch slipping • U/D (Underdrive) brake slipping • U/D (Underdrive) one-way clutch is not operating properly • No.1 one-way clutch not operating properly • Improper fluid level

(b) Measure the time lag.

(1) When the shift lever is shifted while the engine is idling, there will be a certain time lapse or lag before the shock can be felt. This is used for checking the condition of the clutch and brake.

NOTICE:

- **Perform the test at the normal operating ATF (Automatic Transmission Fluid) temperature: 50 to 80°C (122 to 176°F).**

cardiagn.com

- **Be sure to allow 1 minute interval between tests.**
- **Perform the test three times, and measure the time lags. Calculate the average value of the three time lags.**

(2) Connect the intelligent tester to the DLC3.
(3) Fully apply the parking brake.
(4) Start and warm up the engine and check idle speed.
Idle speed:
approx. 700 rpm (In N position and A/C OFF)
(5) Shift the lever from N to D position. Using a stop watch, measure the time from when the lever is shifted until the shock is felt.
Time lag:
N → D less than 1.2 seconds
(6) In the same way, measure the time lag for N → R.
Time lag:
N → R less than 1.5 seconds

Evaluation (If N → D or N → R time lag is longer than the specified):

Problem	Possible cause
N → D time lag is longer	• Line pressure is too low • Forward clutch worn • No.1 one-way clutch is not operating properly • U/D (Underdrive) one-way clutch is not operating • U/D (Underdrive) brake worn
N → R time lag is longer	• Line pressure is too low • Reverse clutch worn • 1st and reverse brake worn • U/D (Underdrive) brake worn

cardiagn.com

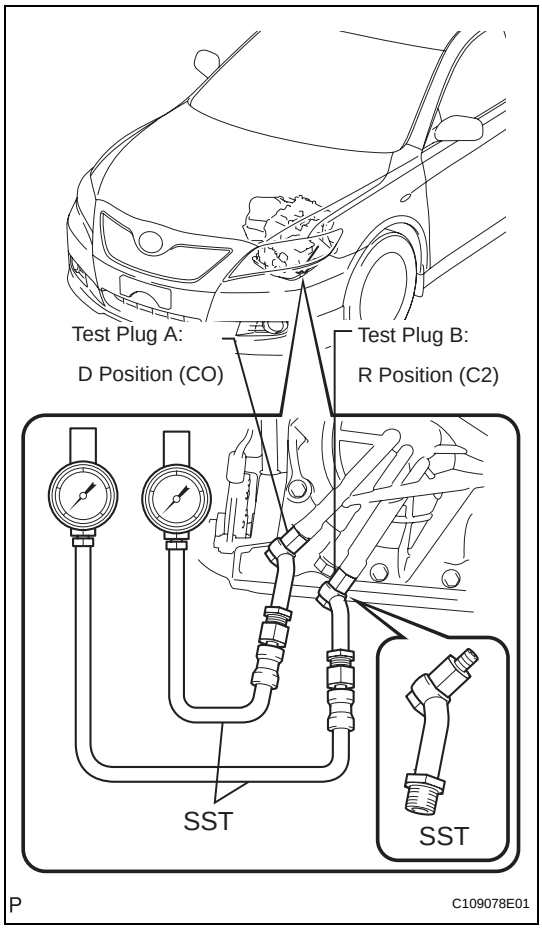

HYDRAULIC TEST

1. PERFORM HYDRAULIC TEST

(a) Measure the line pressure.

NOTICE:

- **Perform the test at the normal operating ATF (Automatic Transmission Fluid) temperature: 50 to 80°C (122 to 176°F).**
- **The line pressure test should always be carried out in pairs. One technician should observe the conditions of wheels or wheel stoppers outside the vehicle while the other is performing the test.**
- **Be careful to prevent SST hose from interfering with the exhaust pipe.**
- **This Check must be conducted after checking and adjusting engine.**
- **Perform under condition that A/C is OFF.**
- **When conducting stall test, do not continue more than 10 seconds.**

(1) Warm up the ATF (Automatic Transmission Fluid).

(2) Lift the vehicle up.

(3) Remove the engine under cover.

(4) Connect intelligent tester to DLC3.

(5) Remove the test plug A on the transaxle case front left side and install the SST.

SST 09992-00095 (09992-00231, 09992-00271)

NOTICE:

There is a difference in installation point between D position and R position.

(6) Start the engine.

(7) Using intelligent tester, shift to D position and hold 3rd gear by active test, and measure the line pressure in idling.

Specified line pressure:

Condition	D position kPa (kgf / cm^2, psi)
Idling	372 to 412 kPa (3.8 to 4.2 kgf/cm^2, 54 to 60 psi)

(8) Turn the ignition switch off.

cardiagn.com

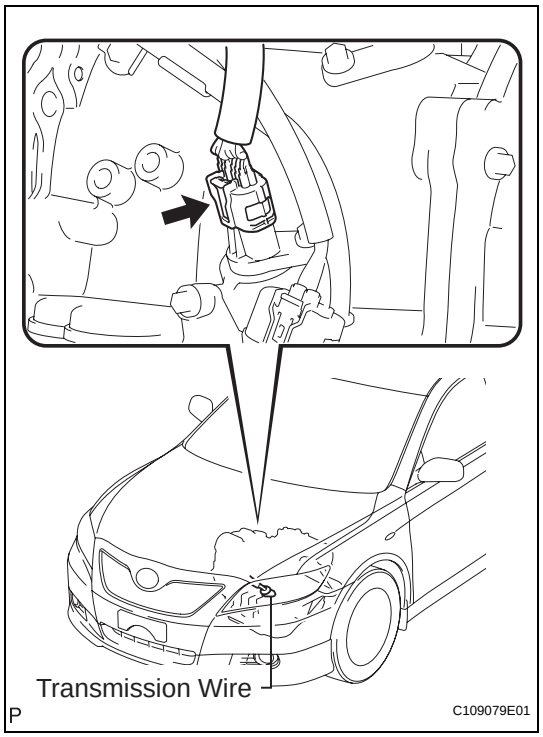

(9) Disconnect the connector of the transmission wire.
HINT:
Disconnect the connector only when performing the D position stall test.

(10) Start the engine.

(11) Firmly depress the brake pedal, shift to the D position, depress the accelerator pedal all the way down and check the line pressure while the stall test is performed.
Specified line pressure:

Condition	D position kPa (kgf / cm^2, psi)
Stall test	931 to 1,031 kPa (9.5 to 10.5 kgf/cm^2, 135 to 150 psi)

(12) Turn the ignition switch off.

(13) Remove the SST, install the test plug A.

(14) Remove the test plug B, install the SST and start engine.
SST 09992-00095 (09992-00231, 09992-00271)

(15) Connect the transmission wire connector, depress the brake pedal firmly, shift to the R position and check that the line pressure while the engine is idling and during the stall test.
Specified line pressure:

Condition	R position kPa (kgf / cm^2, psi)
Idling	672 to 742 kPa (6.9 to 7.6 kgf/cm^2, 97 to 108 psi)
Stall test	1,768 to 1,968 kPa (18.0 to 20.1 kgf/cm^2, 256 to 285 psi)

(16) Remove the SST, install the test plug B.

(17) Clear the DTC.

Evaluation:

Problem	Possible cause
Measured values are higher than specified in all positions	• Shift solenoid valve (SLT) defective • Regulator valve defective
Measured values are lower than specified in all positions	• Shift solenoid valve (SLT) defective • Regulator valve defective • Oil pump defective • U/D (Underdrive) direct clutch defective
Pressure is low in the D position only	• D position circuit fluid leak • Forward clutch defective
Pressure is low in the R position only	• R position circuit fluid leak • Reverse clutch defective • 1st and reverse brake defective

cardiagn.com

MANUAL SHIFTING TEST

1. PERFORM MANUAL SHIFTING TEST

HINT:

- With this test, it can be determined whether the trouble occurs in the electrical circuit or is a mechanical problem in the transaxle.
- If any abnormalities are found in the following test, the problem is in the transaxle itself.

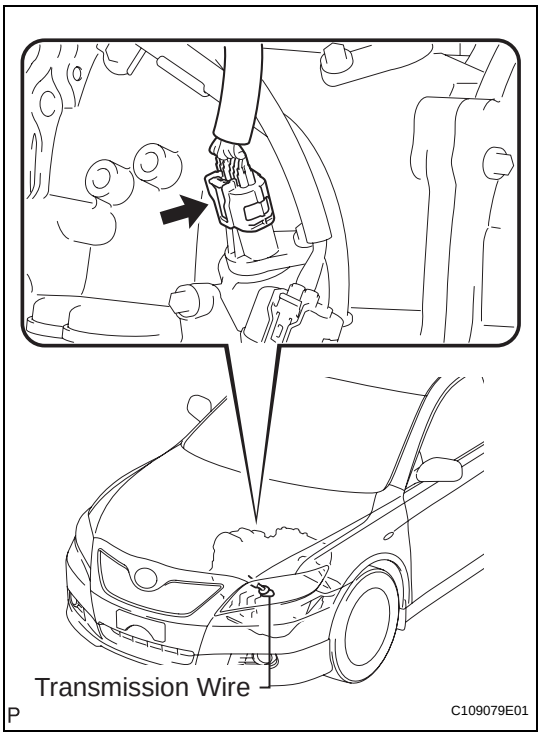

(a) Disconnect the connector of the transmission wire.

(b) Drive with the transmission wire disconnected. Shifting the shift lever in the order of L, 2, 3, 4 and D position to check whether the shifting condition changes the table below.

Shift Position	Shifting Condition
L ⟷ 2	No Shift (Not Change)
2 ⟷ 3	Down Shift ⟷ Up Shift
3 ⟷ 4 ⟷ D	No Shift (Not Change)

HINT:

When driving with the transmission wire disconnected, the shift lever position is in L or 2, the gear position is held in 3rd and the shift lever position is in 3, 4 or D, the gear position is held in 4th. However, when the shift position is in R or P, the operation is same as usual.

(c) Connect the connector of the transmission wire.

(d) Clear the DTC.

cardiagn.com

INITIALIZATION

1. RESET MEMORY

NOTICE:

- **Perform the RESET MEMORY (AT initialization) when replacing the automatic transaxle assembly, engine assembly or ECM.**
- **The RESET MEMORY can be performed only with the Intelligent tester.**

HINT:

The ECM memorizes the condition that the ECT controls the automatic transaxle assembly and engine assembly according to those characteristics. Therefore, when the automatic transaxle assembly, engine assembly, or ECM has been replaced, it is necessary to reset the memory so that the ECM can memorize the new information.

Reset procedure is as follows.

(a) Turn the ignition switch off.

(b) Connect the intelligent tester to the DLC3.

(c) Turn the ignition switch on (IG) position and push the intelligent tester main switch on.

(d) Select the item "DIAGNOSIS / ENHANCED OBD II".

(e) Perform the reset memory procedure from the ENGINE menu.

CAUTION:

After performing the RESET MEMORY, be sure to perform the ROAD TEST (See page AX-9) described earlier.

HINT:

The ECM is learned by performing the ROAD TEST.

(1) Tester menu flow:

cardiagn.com

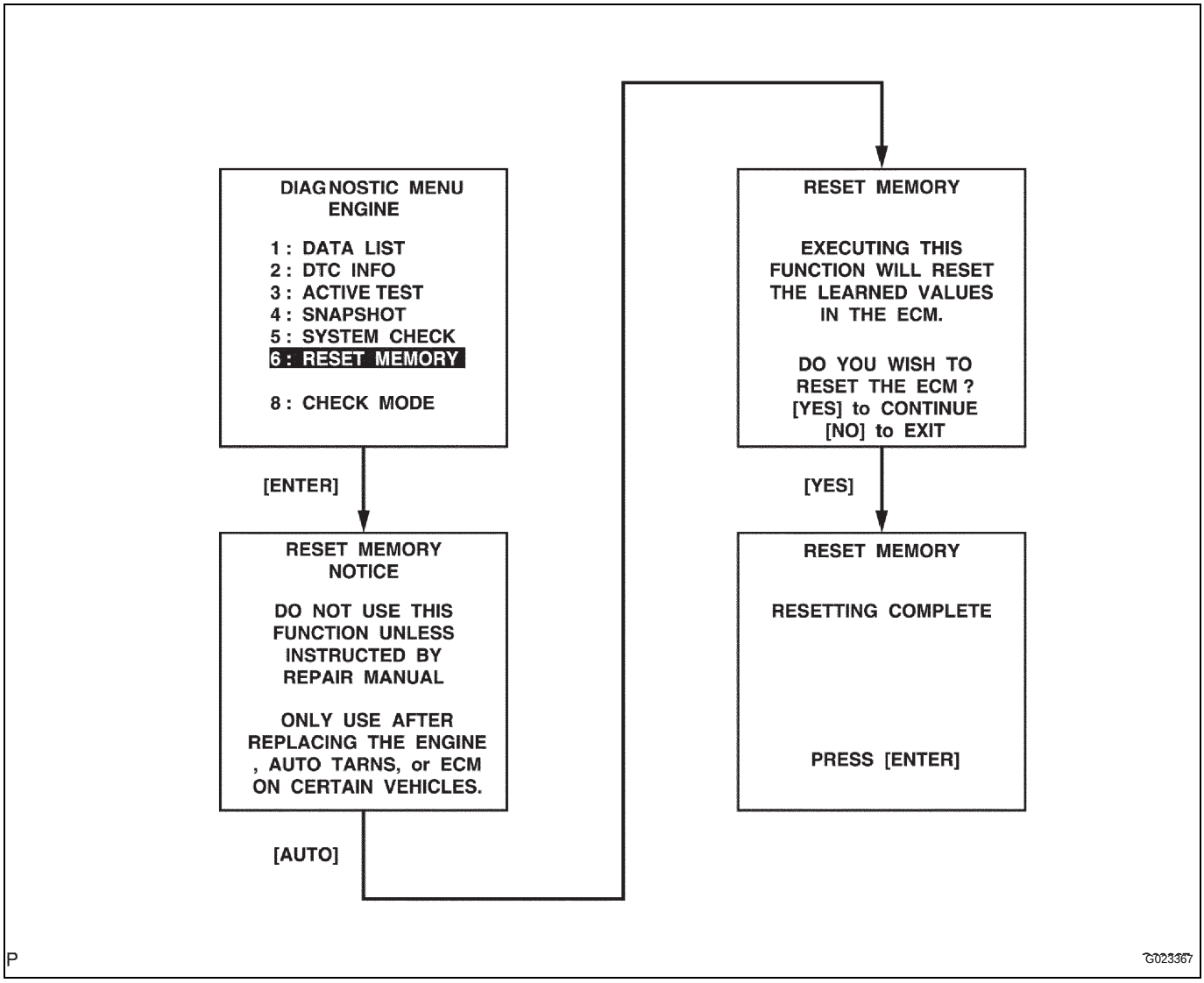

cardiagn.com

MONITOR DRIVE PATTERN

1. MONITOR DRIVE PATTERN FOR ECT TEST

(a) Perform this drive pattern as one method to simulate the detection conditions of the ECT malfunctions. (The DTCs may not be detected due the actual driving conditions. And some codes may not be detected through this drive pattern.)

HINT:

Preparation for driving

- Warm up the engine sufficiently. (Engine coolant temperature is 60°C (140°F) or higher)
- Drive the vehicle when the atmospheric temperature is -10°C (14°F) or higher. (Malfunction is not detected when the atmospheric temperature is less than -10°C (14°F))

Driving note

- Drive the vehicle through all gears.
  Stop → 1st → 2nd → 3rd → 4th → 5th → 5th (lock-up ON).
- Repeat the above driving pattern three times or more.

NOTICE:

- **The monitor status can be checked using the OBD II scan tool or intelligent tester. When using the intelligent tester, monitor status can be found in the "ENHANCED OBD II / DATA LIST" or under "CARB OBD II".**
- **In the event that the drive pattern must be interrupted (possibly due to traffic conditions or other factors), the drive pattern can be resumed and, in most cases, the monitor can be completed.**
- **Perform this drive pattern on a level road as much as possible and strictly observe the posted speed limits and traffic laws while driving.**

cardiagn.com

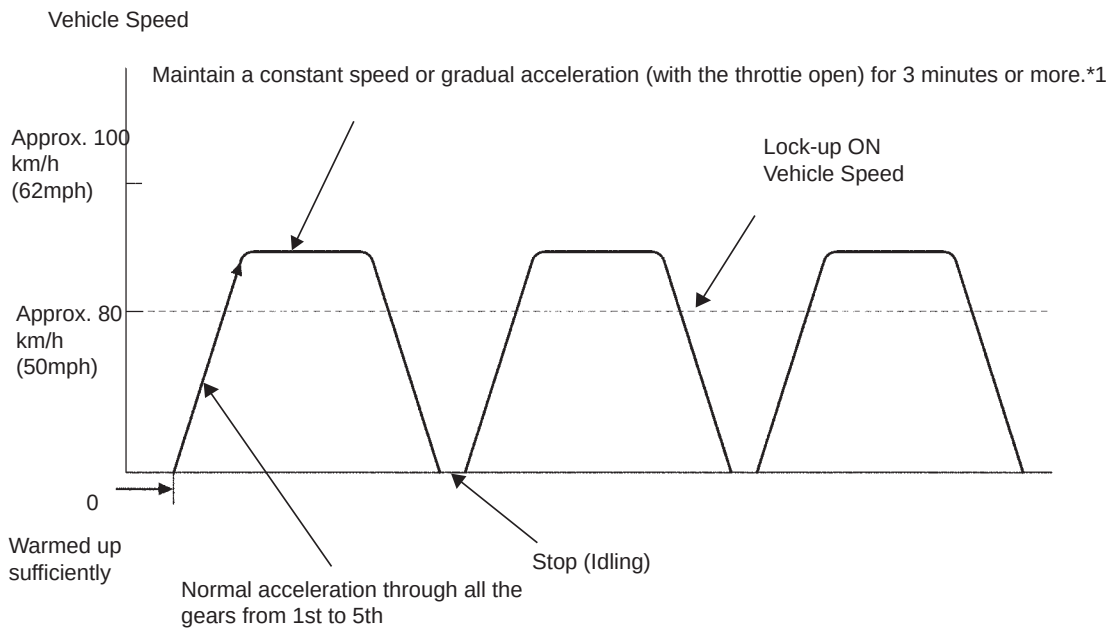

G031593E12

HINT:
*1: Drive at such a speed in the uppermost gear, to engage lock-up. The vehicle can be driven at a speed lower than that in the above diagram under the lock-up condition.

NOTICE:
If necessary to drive the vehicle for approximately 30 minutes to detect DTC P0711 (ATF temperature sensor malfunction).

cardiagn.com

PROBLEM SYMPTOMS TABLE

HINT:

- If a normal code is displayed during the diagnostic trouble code check although the trouble still occurs, check the electrical circuits for each symptom in the order given in the charts on the following pages and proceed to the page given for troubleshooting.
- The Matrix Chart is divided into 2 chapters.
- When the circuit on which mark *1 is attached is a malfunction, DTC could be output.

Chapter 1:

Refer to the table below when the trouble cause is considered to be electrical the instruction "Proceed to next circuit inspection shown on matrix chart" is given in the flow chart of each circuit, proceed to the circuit with the next highest number in the table to continue the check. If the trouble still occurs even though there are no abnormalities in any of the other circuits, check and replace the ECM.

1. Chapter 1: Electronic Circuit Matrix Chart

Symptom	Suspected area	See page
No down-shift (A particular gear, from 1st to 4th gear, is not down-shifted)	ECM	IN-40
No down-shift (5th -> 4th)	1. Transmission control switch (4 <--> D position) circuit *1	AX-39
	2. Shift solenoid valve (S4) circuit *1	AX-106
	3. ECM	IN-40
No up-shift (A particular gear, from 1st to 4th gear, is not up-shifted)	ECM	IN-40
No up-shift (4th -> 5th)	1. Transmission control switch (4 <--> D position) circuit *1	AX-39
	2. Shift solenoid valve (S4) circuit *1	AX-106
	3. ECM	IN-40
No lock-up	1. Stop light switch circuit *1	AX-60
	2. Engine coolant temp. sensor circuit *1	ES-53
	3. ECM	IN-40
No lock-up off	ECM	IN-40
Shift point too high or too low	1. Throttle position sensor circuit *1	ES-53
	2. ECM	IN-40
Up-shift to 5th from 4th while shift lever is in 4 position	1. Transmission control switch (4 <--> D position) circuit *1	AX-39
	2. ECM	IN-40
Up-shift to 5th from 4th while engine is cold	1. Engine coolant temp. sensor circuit *1	ES-53
	2. ECM	IN-40
Up-shift to 2nd from 1st while shift lever is in L position	1. Transmission control switch (2 <--> L position) circuit *1	AX-39
	2. ECM	IN-40
Harsh engagement (N -> D)	1. Shift solenoid valve (SL1) circuit *1	AX-73
	2. ECM	IN-40
Harsh engagement (Lock-up)	ECM	IN-40
Harsh engagement (Any driving position)	ECM	IN-40
Poor acceleration	ECM	IN-40
No kick-down	ECM	IN-40
Engine stalls when starting off or stopping	ECM	IN-40
Malfunction in shifting	1. Park/neutral position switch circuit *1	AX-39
	2. ECM	IN-40

cardiagn.com

2. Chapter 2: On-Vehicle Repair and Off-Vehicle Repair

Symptom	Suspected area	See page
Vehicle does not move in any forward position and in reverse positions	1. Valve body assembly	AX-138
	2. U/D brake (B3)	AX-204
	3. Torque converter clutch	AX-193
Vehicle does not move in R position	1. Valve body assembly	AX-138
	2. Reverse clutch (C2)	AX-204
	3. 1st and reverse brake (B2)	AX-204
No up-shift (1st -> 2nd)	1. Valve body assembly	AX-138
	2. 2nd and O/D brake (B1)	AX-204
No up-shift (2nd -> 3rd)	1. Valve body assembly	AX-138
	2. Direct and O/D clutch (C0)	AX-204
No up-shift (3rd -> 4th)	1. Valve body assembly	AX-138
	2. 2nd and O/D brake (B1)	AX-204
No up-shift (4th -> 5th)	1. Shift solenoid valve (S4)	AX-295
	2. Valve body assembly	AX-138
	3. U/D clutch (C3)	AX-204
No down-shift (5th -> 4th)	1. Shift solenoid (S4)	AX-295
	2. Valve body assembly	AX-138
No down-shift (4th -> 3rd)	Valve body assembly	AX-138
No down-shift (3rd -> 2nd)	Valve body assembly	AX-138
No down-shift (2nd -> 1st)	Valve body assembly	AX-138
No lock-up or No lock-up off	1. Shift solenoid valve (DSL)	AX-295
	2. Valve body assembly	AX-138
	3. Torque converter clutch	AX-193
Harsh engagement (N -> D)	1. Shift solenoid valve (SL1)	AX-295
	2. Valve body assembly	AX-138
	3. C1 accumulator	AX-204
	4. Forward clutch (C1)	AX-204
	5. One-way clutch No.1 (F1)	AX-204
	6. U/D one-way clutch (F2)	AX-204
Harsh engagement (Lock-up)	1.Shift solenoid valve (SL2)	AX-295
	2. Valve body assembly	AX-138
	3. Torque converter clutch	AX-193
Harsh engagement (N -> R)	1. Valve body assembly	AX-138
	2. C2 accumulator	AX-204
	3. Reverse clutch (C2)	AX-204
	4. 1st and reverse brake (B2)	AX-204
Harsh engagement (1st -> 2nd -> 3rd -> 4th -> 5th)	1. Shift solenoid valve (SLT)	AX-295
	2. Valve body assembly	AX-138
Harsh engagement (1st -> 2nd)	1. Valve body assembly	AX-138
	2. 2nd and O/D brake (B1)	AX-204
Harsh engagement (2nd -> 3rd)	1. Valve body assembly	AX-138
	2. C0 accumulator	AX-204
	3. Direct and O/D clutch (C0)	AX-204
Harsh engagement (3rd -> 4th)	1. Valve body assembly	AX-138
	2. 2nd and O/D brake (B1)	AX-204
Harsh engagement (4th -> 5th)	1. Valve body assembly	AX-138
	2. C3 accumulator	AX-204
	3. U/D clutch (B3)	AX-204

cardiagn.com

Symptom	Suspected area	See page
Harsh engagement (5th -> 4th)	1. Valve body assembly	AX-138
	2. B3 accumulator	AX-204
Slip or shudder (Forward and reverse: After warm-up)	1. Valve body assembly	AX-138
	2. Oil strainer	AX-138
	3. Direct and O/D clutch (C0)	AX-204
	4. Forward clutch (C1)	AX-204
	5. U/D clutch (C3)	AX-204
	6. 2nd and brake (B1)	AX-204
	7. U/D brake (B3)	AX-204
	8. One-way clutch No.1 (F1)	AX-204
	9. U/D one-way clutch (F2)	AX-204
	10. Torque converter clutch	AX-193
Slip or shudder (Particular position: Just after engine starts)	Torque converter clutch	AX-193
Slip or shudder (R position)	1. Reverse clutch (C2)	AX-204
	2. 1st and reverse brake (B2)	AX-204
Slip or shudder (1st)	1. Forward clutch (C1)	AX-204
	2. One-way clutch No. 1 (F1)	AX-204
	3. U/D one-way clutch (F2)	AX-204
Slip or shudder (2nd)	2nd and O/D brake (B1)	AX-204
Slip or shudder (3rd)	Direct and O/D clutch (C0)	AX-204
Slip or shudder (4th)	2nd and O/D brake (B1)	AX-204
Slip or shudder (5th)	U/D clutch (C3)	AX-204
Shift position too high or too low	Shift solenoid valve (SLT)	AX-295
No engine braking (1st +- 4th: D position)	U/D brake (B3)	AX-204
No engine braking (1st: L (1) position)	1. Valve body assembly	AX-138
	2. 1st and reverse brake (B2)	AX-204
No engine braking (2nd: 2 position)	1. Valve body assembly	AX-138
	2. 2nd and O/D brake (B1)	AX-204
No engine braking (3rd: 3 position)	U/D brake (B3)	AX-204
No kick-down	Valve body assembly	AX-138
Poor acceleration (All positions)	1. Shift solenoid valve (SLT)	AX-295
	2. Torque converter clutch	AX-193
Poor acceleration (5th)	1. U/D clutch (C3)	AX-204
	2. U/D planetary gear unit	AX-204
Engine stalls when starting off or stopping	1. Shift solenoid valve (DSL)	AX-295
	2. Torque converter clutch	AX-193

cardiagn.com

TERMINALS OF ECM

1. ECM

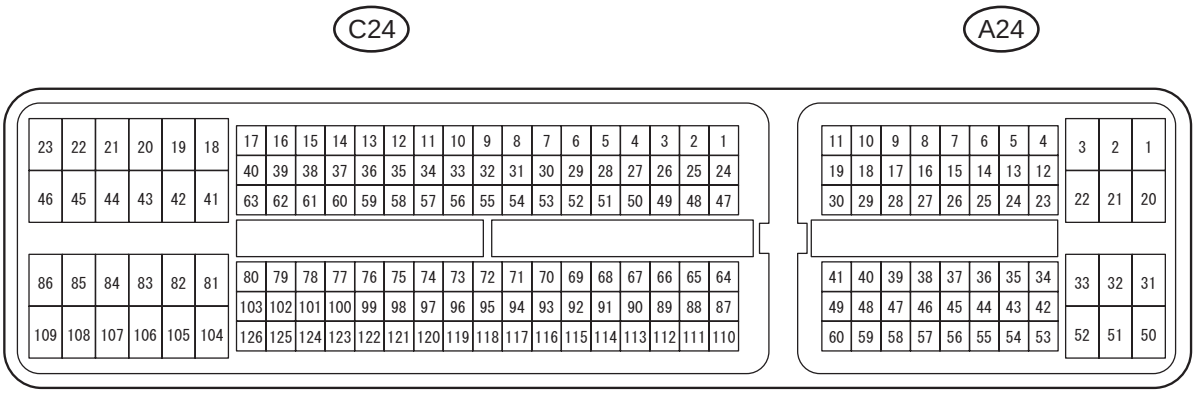

HINT:
Each ECM terminal's standard voltage is shown in the table below.
In the table, first follow the information under "Condition".
Look under "Symbols (Terminal No.)" for the terminals to inspected. The standard voltage between the terminals is shown under "Specific Condition".
Use the illustration above as a reference for the ECM terminals.

Symbols (Terminals No.)	Wiring Color	Terminal Description	Condition	Specified Condition
D (C24-56) - E1 (C24-104)	G - W-B	D shift position switch signal	Ignition switch on (IG) and shift lever D and 4 position	10 to 14 V
			Ignition switch on (IG) and shift lever except D and 4 position	Below 1 V
R (C24-53) - E1 (C24-104)	P - W-B	R shift position switch signal	Ignition switch on (IG) and shift lever R position	10 to 14 V
			Ignition switch on (IG) and shift lever except R position	Below 1 V
SPD (A24-8) - E1 (C24-104)	L - W-B	Speed signal	Vehicle speed 20 km/h (12mph)	Pulse generation (See waveform 8)
STP (A24-36) - E1 (C24-104)	W - W-B	Stop light switch signal	Brake pedal is depressed	7.5 to 14 V
			Brake pedal is released	Below 1.5 V
4 (A24-25) - E1 (C24-104)	G - W-B	4 shift position switch signal	Ignition switch on (IG) and shift lever 4 position	10 to 14 V
			Ignition switch on (IG) and shift lever except 4 position	Below 1 V
3 (A24-26) - E1 (C24-104)	G - W-B	3 shift position switch signal	Ignition switch on (IG) and shift lever 3 position	10 to 14 V
			Ignition switch on (IG) and shift lever except 3 position	Below 1 V
2 (C24-55) - E1 (C24-104)	V - W-B	2 shift position switch signal	Ignition switch on (IG) and shift lever 2 and L position	10 to 14 V
			Ignition switch on (IG) and shift lever except 2 and L position	Below 1 V

cardiagn.com

Symbols (Terminals No.)	Wiring Color	Terminal Description	Condition	Specified Condition
L (C24-74) - E1 (C24-104)	BR - W-B	L shift position switch signal	Ignition switch on (IG) and shift lever L position	10 to 14 V
			Ignition switch on (IG) and shift lever except L position	Below 1 V
P (C24-73) - E1 (C24-104)	GR - W-B	Park position switch signal	Ignition switch on (IG) and shift lever P position	10 to 14 V
			Ignition switch on (IG) and shift lever except P position	Below 1 V
N (C24-54) - E1 (C24-104)	SB - W-B	Neutral position switch signal	Ignition switch on (IG) and shift lever N position	10 to 14 V
			Ignition switch on (IG) and shift lever except N position	Below 1 V
NSW (C24-52) - E1 (C24-104)	SB - W-B	Park neutral switch signal	Ignition switch on (IG) and shift lever P and N position	Below 2 V
			Ignition switch on (IG) and shift lever except P and N position	10 to 14 V
DSL (C24-79) - E1 (C24-104)	BR - W-B	DSL solenoid signal	Vehicle speed 65 km/h (40mph), lock-up (ON to OFF)	Pulse generation (See waveform 2)
SR (C24-80) - E1 (C24-104)	G - W-B	SR solenoid signal	Ignition switch on (IG)	Below 1 V
			3rd, 4th or 5th gear	10 to 14 V
			1st or 2nd gear	Below 1 V
S4 (C24-78) - E1 (C24-104)	GR - W-B	S4 solenoid signal	Ignition switch on (IG)	Below 1 V
			5th gear	10 to 14 V
			Except 5th gear	Below 1 V
SL3+ (C24-60) - SL3- (C24-61)	O - Y	SL3 solenoid signal	Engine idle speed	Pulse generation (See waveform 3)
SL2+ (C24-58) - SL2- (C24-59)	G - R	SL2 solenoid signal	Engine idle speed	Pulse generation (See waveform 4)
SL1+ (C24-57) - SL1- (C24-77)	L - L-G	SL1 solenoid signal	Engine idle speed	Pulse generation (See waveform 5)
NC+ (C24-101) - NC- (C24-102)	LG - P	Speed sensor (NC) signal	Vehicle speed 30 km/h (19mph): (3rd gear) Engine speed 1,400 rpm	Pulse generation (See waveform 6)
NT+ (C24-125) - NT- (C24-124)	G - W	Speed sensor (NT) signal	Vehicle speed 20 km/h (12mph)	Pulse generation (See waveform 7)
SLT+ (C24-76) - SLT- (C24-75)	L - W	SLT solenoid signal	Engine idle speed	Pulse generation (See waveform 1)
THO1 (C24-72) - ETHO (C24-95)	Y - BR	ATF temperature sensor signal	ATF temperature: 115°C (239°F) or more	Below 1.5 V

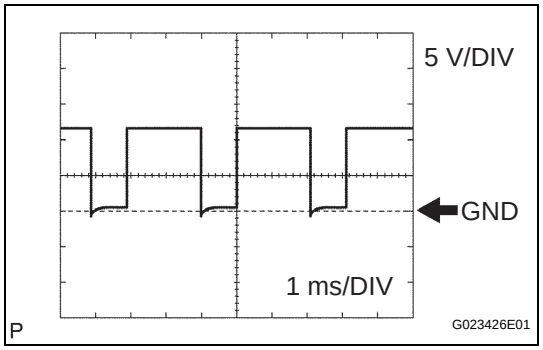

(a) Waveform 1

Reference:

Terminal	SLT+ - SLT-
Tool setting	5 V/DIV, 1ms/DIV
Vehicle condition	Engine idle speed

cardiagn.com

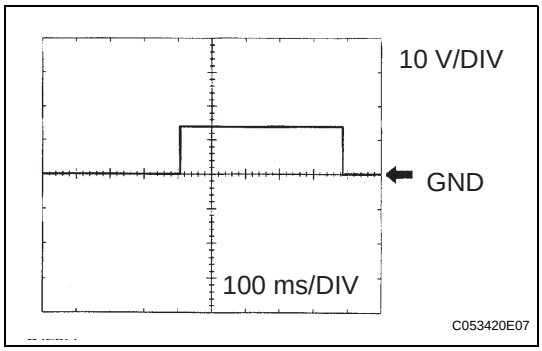

(b) Waveform 2
Reference:

Terminal	DSL - E1
Tool setting	10 V/DIV, 100ms/DIV
Vehicle condition	Vehicle speed 65 km/h (40 mph), lock-up (ON to OFF)

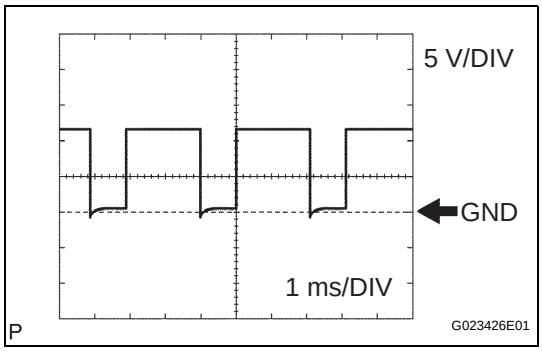

(c) Waveform 3
Reference:

Terminal	SL3+ - SL3-
Tool setting	5 V/DIV, 1ms/DIV
Vehicle condition	Engine idle speed

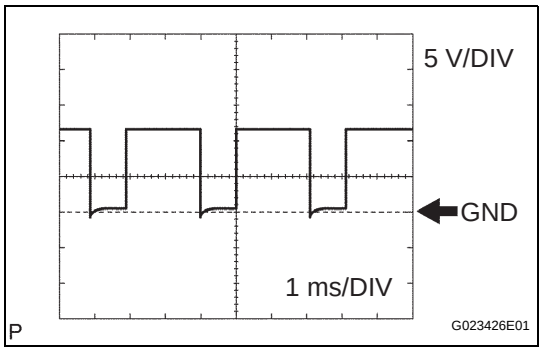

(d) Waveform 4
Reference:

Terminal	SL2+ - SL2-
Tool setting	5 V/DIV, 1ms/DIV
Vehicle condition	Engine idle speed

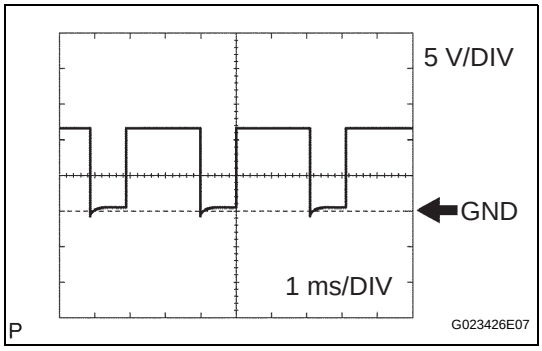

(e) Waveform 5
Reference:

Terminal	SL1+ - SL1-
Tool setting	5 V/DIV, 1ms/DIV
Vehicle condition	Engine idle speed

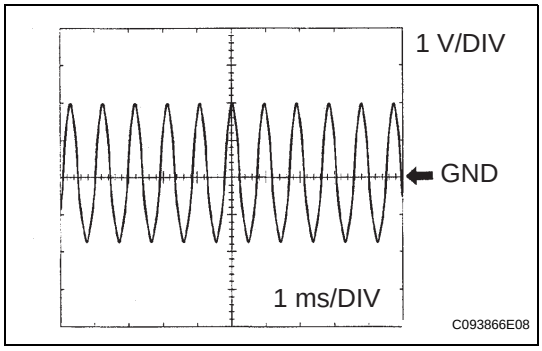

(f) Waveform 6
Reference:

Terminal	NC+ - NC-
Tool setting	1 V/DIV, 1ms/DIV
Vehicle condition	Vehicle speed 30 km/h (19 mph): (3rd gear) Engine speed 1.400 rpm

cardiagn.com

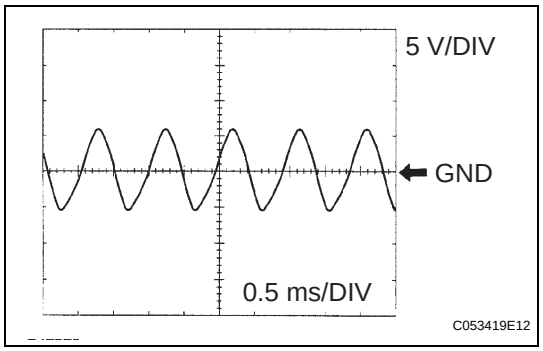

(g) Waveform 7
Reference:

Terminal	NT+ - NT-
Tool setting	5 V/DIV, 0.5ms/DIV
Vehicle condition	Vehicle speed 20 km/h (12 mph)

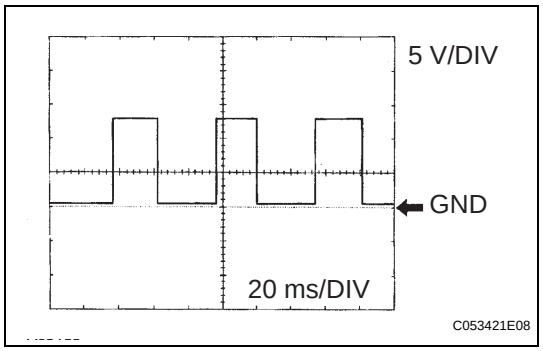

(h) Waveform 8
Reference:

Terminal	SPD - E1
Tool setting	5 V/DIV, 20ms/DIV
Vehicle condition	Vehicle speed 20 km/h (12 mph)

HINT:
Depending on the vehicle, the output waveform voltage, influenced by optionally installed systems, may become 5V.

cardiagn.com

DIAGNOSIS SYSTEM

1. DESCRIPTION

(a) When troubleshooting OBD II vehicles, the only difference from the usual troubleshooting procedure is to connect an OBD II scan tool complying with SAE J1987 or a intelligent tester to the vehicle, and read off various data output from the vehicle's ECM.

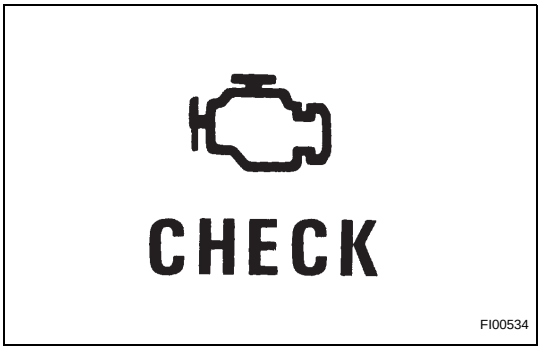

(b) OBD II regulations require that the vehicle's on-board computer illuminate the Malfunction Indicator Lamp (MIL) on the instrument panel when the computer detects a malfunction in the computer itself or in the drive system components which affect the vehicle emissions. In addition to illuminating the MIL when a malfunction is detected, the applicable DTCs prescribed by SAE J2012 are recorded in the ECM memory (See page AX-35).
If the malfunction does not occur in 3 consecutive trips, the MIL goes off but the DTCs remain in the ECM memory.

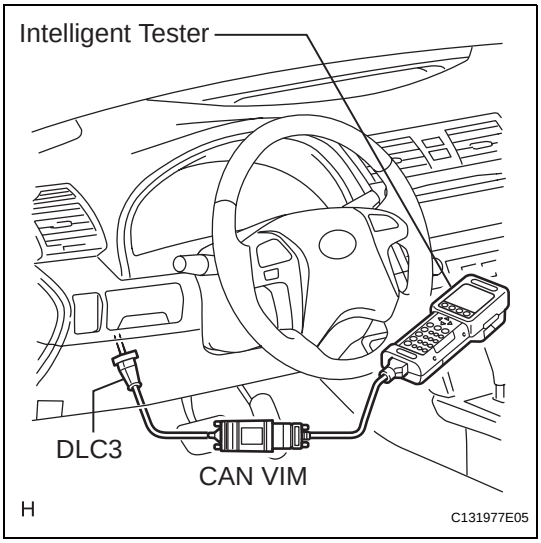

(c) To check the DTCs, connect the OBD II scan tool or intelligent tester to the DLC3 of the vehicle. The OBD II scan tool or intelligent tester also enables you to erase the DTCs and check freeze frame data and various forms of engine data (For operating instructions, see the instruction book).

(d) The DTCs include SAE controlled codes and Manufacturer controlled codes. SAE controlled codes must be set as prescribed by the SAE, while Manufacturer controlled codes can be set freely by a manufacturer within the prescribed limits (See page AX-35).

(e) The diagnosis system operates in "normal mode" during the normal vehicle use. In normal mode, "2-trip detection logic" is used to ensure accurate detection of malfunction. "Check mode" is also available to technicians as an option. In check mode, "1-trip detection logic" is used for simulating malfunction symptoms and increasing the system's ability to detect malfunctions, including intermittent malfunction.

(f) *2 trip detection logic: When a malfunction is first detected, the malfunction is temporarily stored in the ECM memory (1st trip). IF the ignition switch is turned off and then turned on (IG) again, and same malfunction is detected again, the MIL will illuminate.

cardiagn.com

(g) The ECM records vehicle and driving condition information as freeze frame data the moment a DTC is stored. When troubleshooting, freeze frame data can be helpful in determining whether the vehicle was running or stopped, whether the engine was warmed up or not, whether the air/fuel ratio was lean or rich, as well as other data recorded at the time of a malfunction.

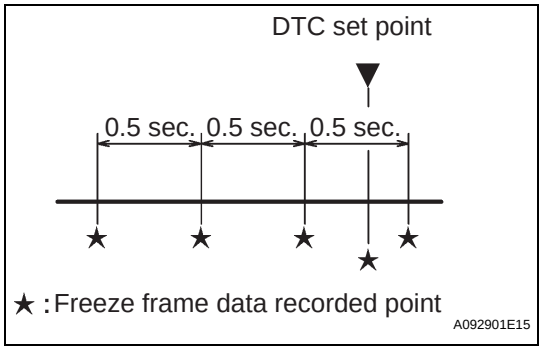

(h) The intelligent tester displays freeze frame data recorded at five different points: 1) 3 times before the DTC is set, 2) once when the DTC is set, and 3) once after the DTC is set. The data can be used to simulate the vehicle's condition around the time of the malfunction. The data may be helpful in determining the cause of a malfunction. It may also be helpful in determining whether a DTC is being caused by a temporary malfunction.

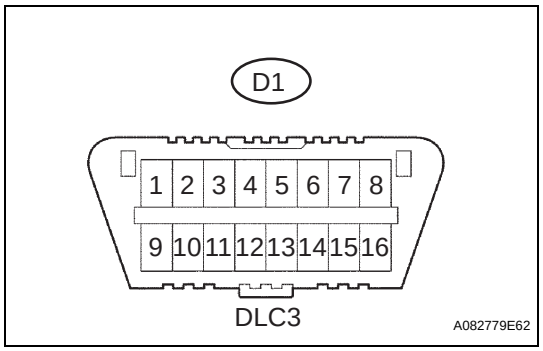

Terminals of DLC 3

2. INSPECT THE DLC3

(a) The vehicle's ECM uses ISO 15765-4for communication. The terminal arrangement of the DLC3 complies with SAE J1962 and matches the ISO 15765-4format.

Symbol	Terminal No.	Name	Reference Terminal	Result	Condition
SIL	7	Bus "+" line	5 - Signal ground	Pulse generation	During transmission
CG	4	Chassis ground	Body ground	Below 1 Ω	Always
SG	5	Signal ground	Body ground	Below 1 Ω	Always
BAT	16	Battery positive	Body ground	11 to 14 V	Always
CANH	6	CAN bus line	CANL	54 to 69 Ω	IG switch OFF*
CANH	6	HIGH-level CAN bus line	Battery positive	6 kΩ or higher	IG switch OFF*
CANH	6	HIGH-level CAN bus lineCG	CG	200 Ω or higher	IG switch OFF*
CANL	14	LOW-level CAN bus line	Battery positive	6 kΩ or higher	IG switch OFF*
CANL	14	LOW-level CAN bus line	CG	200 Ω or higher	IG switch OFF*

CAUTION:
***: Before measuring the resistance, leave the vehicle as is for at least 1 minute and do not operate the ignition switch, any other switches or the doors.**

cardiagn.com

If the result is not as specified, the DLC3 may have a malfunction. Repair or replace the harness and connector.

HINT:

The DLC3 is the interface prepared for reading various data from the vehicle's ECM. After connecting the cable of the intelligent tester to the CAN VIM, turn the ignition switch ON and turn the tester ON. If a communication failure message is displayed on the tester screen (on the tester: UNABLE TO CONNECT TO VEHICLE), a problem exists in either the vehicle or tester. In order to identify the location of the problem, connect the tester to another vehicle.

- If the communication is normal when the tool is connected to another vehicle, inspect the DLC3 on the original vehicle.
- If the communication is still impossible when the tool is connected to another vehicle, the problem is probably in the tool itself, so consult the Service Department listed in the tool's instruction manual.

3. CHECK BATTERY VOLTAGE

(a) Measure the battery voltage.

Battery voltage:

11 to 14 V

If voltage is below 11 V, replace the battery before proceeding.

4. CHECK MIL

(a) Check that the MIL illuminates when turning the ignition switch on (IG).

HINT:

If the MIL does not light up, troubleshoot the combination meter.

(b) When the engine is started, the MIL should go off. If the lamp remains on, it means that the diagnosis system has detected a malfunction or abnormality in the system.

cardiagn.com

DTC CHECK / CLEAR

1. DTC CHECK (NORMAL MODE)

NOTICE:

When the diagnostic system is switched from the normal mode to the check mode, all the DTCs and freeze frame data recorded in the normal mode will be erased. So before switching modes, always check the DTCs and freeze frame data, and note them down.

DTCs which are stored in the ECM can be displayed with the intelligent tester or generic OBD II scan tool. These scan tools can display pending DTCs and current DTCs. Some DTC aren't stored if the ECM doesn't detect a malfunction during consecutive driving. However, the detected malfunction during once driving is stored as pending DTC.

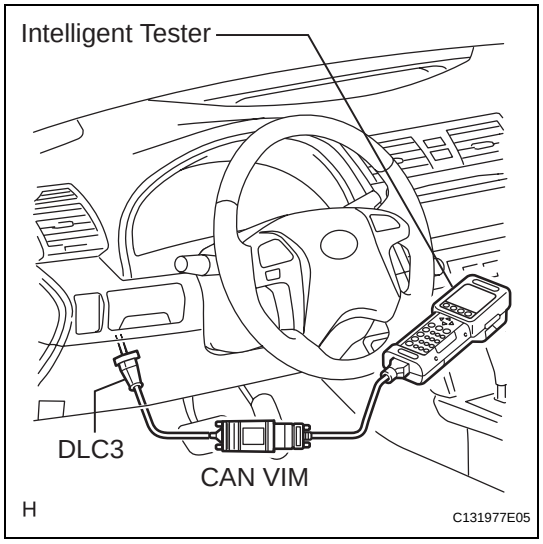

(a) Checking DTCs using the OBD II scan tool or intelligent tester.
  (1) Connect the intelligent tester to the Controller Area Network Vehicle Interface Module (CAN VIM). Then connect the CAN VIM to the Data Link Connector 3 (DLC3).
  (2) Turn the ignition switch on (IG).
  (3) Enter the following menus: DIAGNOSIS / ENHANCED OBD II / DTC INFO / CURRENT CODES (or PENDING CODE).
  (4) Use the OBD II scan tool or intelligent tester to check the DTCs and freeze frame data and note them down (For operating instructions, see the OBD II scan tool's instruction book).

  NOTICE:

  When simulating symptoms with an OBD II scan tool (excluding intelligent tester) to check the DTCs, use the normal mode. For codes on the DTCs chart which are subject to "2 trip detection logic",

  Turn the engine switch off after the symptom is simulated once. Then repeat the simulation process again. When the problem has been simulated twice, the MIL illuminates and the DTCs are recorded in the ECM.

2. DTC CLEAR

(a) Connect the intelligent tester to the CAN VIM. Then connect the CAN VIM to the DLC3.
(b) Turn the ignition switch on (IG).
(c) Enter the following menus: DIAGNOSIS / ENHANCED OBD II / DTC INFO / CLEAR CODES and press YES.

cardiagn.com

CHECK MODE PROCEDURE

HINT:
Check mode has a higher sensitivity to malfunctions and can detect malfunction that normal mode cannot detect. Check mode can also detect all the malfunctions that normal mode can detect. In check mode, DTCs are detected with 1-trip detection logic.

1. DTC CHECK (CHECK MODE)

HINT:
Intelligent tester only: Compared to the normal mode, the check mode is more sensitive for detecting malfunctions. Furthermore, the same diagnostic items which are detected in the normal mode can also be detected in the check mode.

(a) Procedure for Check Mode using the intelligent tester.

(1) Check the initial conditions.
- Battery positive voltage 11 V or more
- Throttle valve fully closed
- Transaxle in the P or N position
- A/C switch is off

(2) Turn the ignition switch off.

(3) Connect the intelligent tester together with the Controller Area Network Vehicle Interface Module (CAN VIM) to the DLC3.

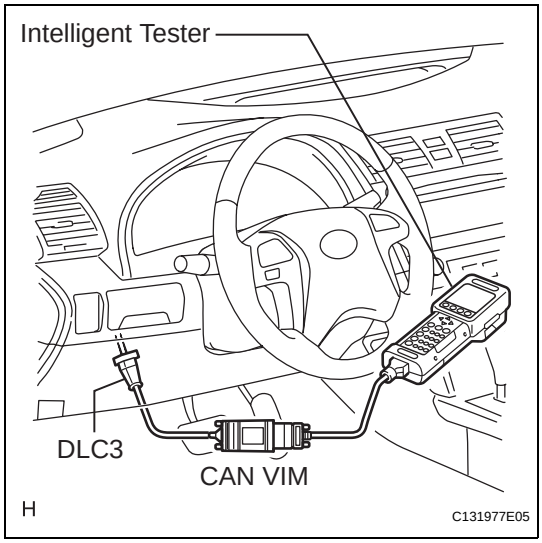

(4) Turn the ignition switch on (IG) and turn the intelligent tester main switch on.

(5) Select the item "DIAGNOSIS/ENHANCED OBD II/CHECK MODE" (Check that the MIL flashes).
NOTICE:
All DTCs and freeze frame data recorded will be erased if: 1) the intelligent tester is used to change the ECM from normal mode to check mode or vice-versa; or 2) during check mode, the ignition switch is turned from the on (IG) to ACC position or turned OFF.

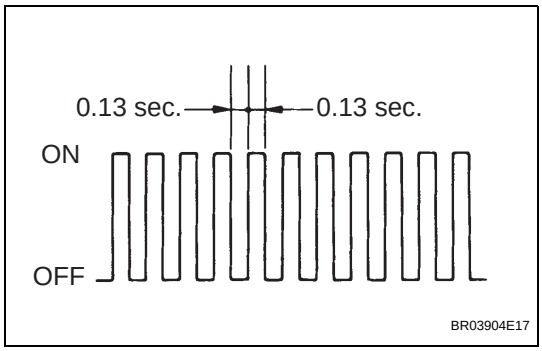

(6) Start the engine (the MIL goes off after the engine starts).

(7) Perform "MONITOR DRIVE PATTERN" for the ECT test (See page AX-17). (Or, simulate the conditions of the malfunction described by the customer).
NOTICE:
Leave the ignition switch on (IG) until you have checked the DTCs, etc.

(8) After simulating malfunction conditions, use the intelligent tester diagnosis selector to check the DTCs and freeze frame data, etc.

cardiagn.com

(9) When you use intelligent tester: Select the item "DIAGNOSIS / ENHANCED OBD II / DTC INFO / CURRENT CODES".

(10) After checking the DTC, inspect the applicable circuit.

(11) (See page AX-35) to confirm the details of the DTCs.

2. DTC CLEAR

(a) Connect the intelligent tester to the CAN VIM. Then connect the CAN VIM to the DLC3.

(b) Turn the ignition switch on (IG).

(c) Enter the following menus: DIAGNOSIS / ENHANCED OBD II / DTC INFO / CLEAR CODES and press YES.

cardiagn.com

FAIL-SAFE CHART

1. FAIL-SAFE

This function minimizes the loss of the ECT functions when any malfunction occurs in a sensor or solenoid.

(a) ATF (Automatic Transmission Fluid) temperature sensor:
When the ATF temperature sensor has a malfunction, 5th upshift is prohibited.

(b) Counter gear speed sensor NC (Speed sensor NC):
When the counter gear speed sensor has a malfunction, 5th upshift is prohibited.

(c) Shift solenoid valve DSL:
When the solenoid valve DSL has a malfunction, the current to the solenoid valve is stopped.
This stops lock-up control, then fuel economy decreases.

(d) Shift solenoid valve SL1, SL2, SL3 and S4:
Fail safe function:
If either of the shift solenoid valve circuits develops an open or short, the ECM turns the other shift solenoid "ON" and "OFF" in order to shift into the gear positions shown in the table below.
Manual shifting as shown in the following table must be done (In case of a short circuit, the ECM stops sending the current to the short circuited solenoid).
Even if starting the engine in the fail-safe mode, the gear position remains in the same position.
HINT:
FL: Flex Lock-up

Normal	Solenoid Valve	SL1	ON	OFF	ON	OFF	OFF
		SL2	ON	ON	OFF	FL	FL
		SL3	OFF	OFF	OFF	ON	ON
		S4	OFF	OFF	OFF	OFF	ON
	Gear Position		1st	2nd	3rd	4th	5th
SL1 Malfunction (During driving at 1st or 2nd)	Solenoid Valve	SL1	OFF				
		SL2	ON	ON	OFF to ON	FL to ON	FL to ON
		SL3	OFF	OFF	OFF	ON to OFF	ON to OFF
		S4	OFF	OFF	OFF	OFF	ON to OFF
	Gear Position		1st to 2nd	2nd	3rd to 2nd	4th to 2nd	5th to 2nd
SL1 Malfunction (During driving at 3rd)	Solenoid Valve	SL1	OFF				
		SL2	ON to FL	ON to FL	OFF to FL	FL	FL
		SL3	OFF	OFF	OFF	ON to FL	ON to FL
		S4	OFF to ON	OFF to ON	OFF to ON	OFF to ON	ON
	Gear Position		1st to 4th	2nd to 4th	3rd to 4th	4th	5th to 4th
SL1 Malfunction (During driving at 4th or 5th)	Solenoid Valve	SL1	OFF				
		SL2	ON to FL	ON to FL	OFF to FL	FL	FL
		SL3	OFF to ON	OFF to ON	OFF to ON	ON	ON
		S4	OFF	OFF	OFF	OFF	ON
	Gear Position		1st to 4th	2nd to 4th	3rd to 4th	4th	5th to 4th

cardiagn.com

SL2 Malfunction	Solenoid Valve	SL1	ON	OFF to ON	ON	OFF to ON	OFF to ON
		SL2	OFF				
		SL3	OFF	OFF	OFF	ON to OFF	ON to OFF
		S4	OFF to ON	OFF to ON	OFF to ON	OFF to ON	ON
	Gear Position		1st to 4th	2nd to 4th	3rd to 4th	4th	5th to 4th
SL3 Malfunction	Solenoid Valve	SL1	ON	OFF	ON	OFF to ON	OFF to ON
		SL2	ON	ON	OFF	FL	FL
		SL3	OFF				
		S4	OFF	OFF	OFF	OFF to ON	ON
	Gear Position		1st	2nd	3rd	4th	5th to 4th
S4 Malfunction	Solenoid Valve	SL1	ON	OFF	ON	OFF	OFF
		SL2	ON	ON	OFF	FL	FL
		SL3	OFF	OFF	OFF	ON	ON
		S4	OFF				
	Gear Position		1st	2nd	3rd	4th	5th to 4th
SL1, SL2, SL3, and S4 Malfunction	Solenoid Valve	SL1	OFF				
		SL2	OFF				
		SL3	OFF				
		S4	OFF				
	Gear Position		1st to 4th	2nd to 4th	3rd to 4th	4th	5th to 4th

cardiagn.com

DATA LIST / ACTIVE TEST

1. DATA LIST

HINT:
According to the DATA LIST displayed by the intelligent tester, you can read the value of the switch, sensor, actuator and so on without parts removal. Reading the DATA LIST as the first step of troubleshooting is one method to shorten labor time.

NOTICE:
In the table below, the values listed under "Normal Condition" are reference values. Do not depend solely on these reference values when deciding whether a part is faulty or not.

(a) Warm up the engine.
(b) Turn the ignition switch off.
(c) Connect the intelligent tester together with the CAN VIM (controller area network vehicle interface module) to the DLC3.
(d) Turn the ignition switch to the on position.
(e) Turn on the tester.
(f) Select the item "DIAGNOSIS / OBD/MOBD / ECT / DATA LIST".
(g) According to the display on the tester, read the "DATA LIST".

Item	Measurement Item/ Range (display)	Normal Condition	Diagnostic Note
STOP LIGHT SW	Stop light switch Status/ ON or OFF	• Brake Pedal is depressed: ON • Brake Pedal is released: OFF	-
PNP SW [NSW]	PNP switch Status/ ON or OFF	Shift lever position is; P and N: ON Except P and N: OFF	When the shift lever position displayed on the Intelligent tester differs from the actual position, adjustment of the PNP switch or the shift cable may be incorrect. HINT: When the failure still occurs even after adjusting these parts, See page AX-39.
REVERSE	PNP switch Status/ ON or OFF	Shift lever position is; R: ON Except R: OFF	↑
DRIVE	PNP switch Status/ ON or OFF	Shift lever position is; D and 4 : ON Except D and 4: OFF	↑
2ND	PNP SW Status/ ON or OFF	Shift lever position is; 2 and L : ON Except 2 and L: OFF	↑
LOW	PNP SW Status/ ON or OFF	Shift lever position is; L : ON Except L: OFF	↑
4TH/DRIVE	PNP SW Status/ ON or OFF	Shift lever position is; 4 : ON Except 4: OFF	↑
3RD	PNP SW Status/ ON or OFF	Shift lever position is; 3 : ON Except 3: OFF	↑

cardiagn.com

Item	Measurement Item/ Range (display)	Normal Condition	Diagnostic Note
SHIFT	Actual Gear Position/ 1st, 2nd, 3rd, 4th or 5th (O/D)	Shift Lever Position is; • L: 1st • 2: 1st or 2nd • 3: 1st, 2nd or 3rd • 4: 1st, 2nd, 3rd or 4th • D (O/D ON): 1st, 2nd, 3rd, 4th or 5th	-
LOCK UP SOL	Lock Up Solenoid Status/ ON or OFF	• Lock Up: ON • Except Lock Up: OFF	-
SOLENOID (SLT)	Shift Solenoid SLT Status/ ON or OFF	• Accelerator pedal is depressed: OFF • Accelerator pedal is released: ON	-
AT FLUID TEMP	ATF Temp. Sensor Value/ min.: -40°C (-40°F) max.: 215°C (419°F)	• After Stall Test; Approx. 80°C (176°F) • Equal to ambient temperature when cold soak	If the value is "-40°C (-40°F)" or "215°C (419°F)", ATF temp. sensor circuit is opened or shorted.
SPD (NC)	Counter Gear Speed/ display: 50 r/min	HINT: 3rd when shift lever position is D position (After warming up the engine); • Intermediate shaft speed (NC) becomes close to the engine speed.	-

2. ACTIVE TEST

HINT:

Performing the ACTIVE TEST using the intelligent tester allows the relay, VSV, actuator and so on to operate without parts removal. Performing the ACTIVE TEST as the first step of troubleshooting is one method to shorten labor time.

It is possible to display the DATA LIST during the ACTIVE TEST.

(a) Warm up the engine.
(b) Turn the ignition switch off.
(c) Connect the intelligent tester together with the CAN VIM (controller area network vehicle interface module) to the DLC3.
(d) Turn the ignition switch to the ON position.
(e) Push the "ON" button of the intelligent tester.
(f) Select the item "DIAGNOSIS / OBD/MOBD / ECT / ACTIVE TEST".
(g) According to the display on tester, perform the "ACTIVE TEST".

Item	Test Details	Diagnostic Note
SHIFT	[Test Details] Operate the shift solenoid valve and set the each shift position by yourself. [Vehicle Condition] • IDL: ON • Less than 50 km/h (31 mph) [Others] • Press "→" button: Shift up • Press "←" button: Shift down	Possible to check the operation of the shift solenoid valves.

cardiagn.com

Item	Test Details	Diagnostic Note
LOCK UP	[Test Details] Control the shift solenoid DSL to set the automatic transaxle to the lock-up condition. [Vehicle Condition] • Vehicle Speed: 60 km/h (37 mph) or more	Possible to check the DSL operation.
SOLENOID (SL1)	[Test Details] Operate the shift solenoid SL1 [Vehicle Condition] • Vehicle Stopped. • Shift lever P or N position	-
SOLENOID (SL2)	[Test Details] Operate the shift solenoid SL2 [Vehicle Condition] • Vehicle Stopped. • Shift lever P or N position	-
SOLENOID (SL3)	[Test Details] Operate the shift solenoid SL3 [Vehicle Condition] • Vehicle Stopped. • Shift lever P or N position	-
SOLENOID (S4)	[Test Details] Operate the shift solenoid S4 [Vehicle Condition] • Vehicle Stopped. • Shift lever P or N position	-
SOLENOID (SR)	[Test Details] Operate the shift solenoid SR [Vehicle Condition] • Vehicle Stopped. • Shift lever P or N position	-
SOLENOID (DSL)	[Test Details] Operate the shift solenoid DSL [Vehicle Condition] • Vehicle Stopped. • Shift lever P or N position	-
SOLENOID (SLT)*	[Test Details] Operate the shift solenoid SLT and raise the line pressure. [Vehicle Condition] • Vehicle Stopped. • IDL: ON HINT: OFF: Line pressure up (When the active test of "SOLENOID (SLT)" is performed, the ECM commands the SLT solenoid to turn off). ON: No action (normal operation)	-

*: "SOLENOID (SLT)" in the ACTIVE TEST is performed to check the line pressure changes by connecting the SST to the automatic transaxle, which is used in the HYDRAULIC TEST (See page AX-14) as well.
HINT:
The pressure values in ACTIVE TEST and HYDRAULIC TEST are different from each other.

cardiagn.com

DIAGNOSTIC TROUBLE CODE CHART

If a DTC is displayed during the DTC check, check the parts listed in the table below and proceed to the page given.
HINT:

- *1: Comes on MIL (Malfunction Indicator Lamp) light up
- *2: "DTC stored" mark means ECM memorizes the malfunction code if the ECM detects the DTC detection condition.
- This DTC may be output when the clutch, brake and gear components etc. inside the automatic transmission are damaged.

AUTOMATIC TRANSMISSION SYSTEM

DTC No.	Detection Item	Trouble Area	MIL *1	Memory *2	See page
P0705	Transmission Range Sensor Circuit Malfunction (PRNDL Input)	1. Open or short in park/neutral position switch circuit 2. Park/neutral position switch 3. ECM	Comes on	DTC stored	AX-39
P0710	Transmission Fluid Temperature Sensor "A" Circuit	1. Open or short in ATF temperature sensor circuit 2. Transmission wire (ATF temperature sensor) 3. ECM	Comes on	DTC stored	AX-48
P0711	Transmission Fluid Temperature Sensor "A" Performance	1. Transmission wire (ATF temperature sensor)	Comes on	DTC stored	AX-53
P0712	Transmission Fluid Temperature Sensor "A" Circuit Low Input	1. Short in ATF temperature sensor circuit 2. Transmission wire (ATF temperature sensor) 3. ECM	Comes on	DTC stored	AX-48
P0713	Transmission Fluid Temperature Sensor "A" Circuit High Input	1. Open in ATF temperature sensor circuit 2. Transmission wire (ATF temperature sensor) 3. ECM	Comes on	DTC stored	AX-48
P0717	Turbine Speed Sensor Circuit No Signal	1. Open or short in transmission revolution sensor NT (speed sensor NT) circuit 2. Transmission revolution sensor NT (speed sensor NT) 3. ECM 4. Automatic transaxle assembly	Comes on	DTC stored	AX-57
P0724	Brake Switch "B" Circuit High	1. Short in stop light switch circuit 2. Stop light switch 3. ECM	Comes on	DTC stored	AX-60

cardiagn.com

DTC No.	Detection Item	Trouble Area	MIL *1	Memory *2	See page
P0741	Torque Converter Clutch Solenoid Performance (Shift Solenoid Valve DSL)	1. Shift solenoid valve DSL remains open or closed 2. Valve body is blocked 3. Torque converter clutch 4. Automatic transaxle (clutch, brake or gear etc.) 5. Line pressure is too low	Comes on	DTC stored	AX-63
P0746	Pressure Control Solenoid "A" Performance (Shift Solenoid Valve SL1)	1. Shift solenoid valve SL1 remains open or closed 2. Valve body is blocked 3. Automatic transaxle (clutch, brake or gear etc.)	Comes on	DTC stored	AX-69
P0748	Pressure Control Solenoid "A" Electrical (Shift Solenoid Valve SL1)	1. Open or short in shift solenoid valve SL1 circuit 2. Shift solenoid valve SL1 3. ECM	Comes on	DTC stored	AX-73
P0766	Shift Solenoid "D" Performance (Shift Solenoid Valve S4)	1. Shift solenoid valve S4 remains open or closed 2. Valve body is blocked (Brake control valve) 3. Automatic transmission (clutch, brake or gear, etc.)	Comes on	DTC stored	AX-77
P0771	Shift Solenoid "E" Performance (Shift Solenoid Valve SR)	1. Shift solenoid valve SR remains open or closed 2. Valve body is blocked 3. Automatic transaxle (clutch, brake or gear etc.)	Comes on	DTC stored	AX-81
P0776	Pressure Control Solenoid "B" Performance (Shift Solenoid Valve SL2)	1. Shift solenoid valve SL2 remains open or closed 2. Valve body is blocked 3. Automatic transaxle (clutch, brake or gear etc.)	Comes on	DTC stored	AX-85
P0778	Pressure Control Solenoid "B" Electrical (Shift Solenoid Valve SL2)	1. Open or short in shift solenoid valve SL2 circuit 2. Shift solenoid valve SL2 3. ECM	Comes on	DTC stored	AX-90
P0793	Intermediate Shaft Speed Sensor "A"	1. Open or short in transmission revolution sensor NC (speed sensor NC) circuit 2. Transmission revolution sensor NC (speed sensor NC) 3. ECM	Comes on	DTC stored	AX-94

cardiagn.com

DTC No.	Detection Item	Trouble Area	MIL *1	Memory *2	See page
P0796	Pressure Control Solenoid "C" Performance (Shift Solenoid Valve SL3)	1. Shift solenoid valve SL3 remains open or closed 2. Valve body is blocked 3. Automatic transaxle (clutch, brake or gear etc.)	Comes on	DTC stored	AX-98
P0798	Pressure Control Solenoid "C" Electrical (Shift Solenoid Valve SL3)	1. Open or short in shift solenoid valve SL3 circuit 2. Shift solenoid valve SL3 3. ECM	Comes on	DTC stored	AX-102
P0982	Shift Solenoid "D" Control Circuit Low (Shift Solenoid Valve S4)	1. Short in shift solenoid valve S4 circuit 2. Shift solenoid valve S4 3. ECM	Comes on	DTC stored	AX-106
P0983	Shift Solenoid "D" Control Circuit High (Shift Solenoid Valve S4)	1. Open in shift solenoid valve S4 circuit 2. Shift solenoid valve S4 3. ECM	Comes on	DTC stored	AX-106
P0985	Shift Solenoid "E" Control Circuit Low (Shift Solenoid Valve SR)	1. Short in shift solenoid valve SR circuit 2. Shift solenoid valve SR 3. ECM	Comes on	DTC stored	AX-109
P0986	Shift Solenoid "E" Control Circuit High (Shift Solenoid Valve SR)	1. Open in shift solenoid valve SR circuit 2. Shift solenoid valve SR 3. ECM	Comes on	DTC stored	AX-109
P2714	Pressure Control Solenoid "D" Performance (Shift Solenoid Valve SLT)	1. Shift solenoid valve SLT remains closed 2. Valve body is blocked 3. Automatic transaxle (clutch, brake or gear etc.)	Comes on	DTC stored	AX-112
P2716	Pressure Control Solenoid "D" Electrical (Shift Solenoid Valve SLT)	1. Open or short in shift solenoid valve SLT circuit 2. Shift solenoid valve SLT 3. ECM	Comes on	DTC stored	AX-116
P2769	Torque Converter Clutch Solenoid Circuit Low (Shift Solenoid Valve DSL)	1. Short in shift solenoid valve DSL circuit 2. Shift solenoid valve DSL 3. ECM	Comes on	DTC stored	AX-120
P2770	Torque Converter Clutch Solenoid Circuit High (Shift Solenoid Valve DSL)	1. Open in shift solenoid valve DSL circuit 2. Shift solenoid valve DSL 3. ECM	Comes on	DTC stored	AX-120

cardiagn.com

DTC	P0705	Transmission Range Sensor Circuit Malfunction (PRNDL Input)

DESCRIPTION

The park/neutral position switch detects the shift lever position and sends signals to the ECM.

DTC No.	DTC Detection Condition	Trouble Area
P0705	(A) Any 2 or more signals of the following are ON simultaneously (2-trip detection logic) • P input signal is ON. • N input signal is ON. • R input signal is ON. • D input signal is ON. • 3 input signal is ON. • 2 input signal is ON. (B) Any 2 or more signals of the following are ON simultaneously (2-trip detection logic) • NSW input signal is ON. • R input signal is ON. • D input signal is ON. • 3 input signal is ON. • 2 input signal is ON. (C) All switches are OFF simultaneously for NSW, P, R, N, D, 3 and 2 positions (2-trip detection logic). (D) Both 1 and 2 are met (2-trip detection logic) 1. One of the following is met (a) NSW input signal is ON. (b) P input signal is ON. (c) N input signal is ON. (d) R input signal is ON 2. One of the following is met (a) 4 input signal is ON. (b) L input signal is ON.	• Open or short in park / neutral position switch circuit • Park / neutral position switch • ECM

MONITOR DESCRIPTION

These DTCs indicate a problem with the park/neutral position switch and the wire harness in the park/neutral position switch circuit.
The park/neutral position switch detects the shift lever position and sends a signal to the ECM.
For security, the park/neutral position switch detects the shift lever position so that engine can be started only when the shift lever is in the P or N position
The park/neutral position switch sends a signal to the ECM according to the shift position (P, R, N or D).
The ECM determines that there is a problem with the switch or related parts if in receives more than 1 position signal simultaneously. The ECM will turn on the MIL and store the DTC.

MONITOR STRATEGY

Related DTCs	P0705: Park/neutral position switch/Verify switch input
Required sensors/Components	Park/neutral position switch
Frequency of operation	Continuous
Duration	2 sec.
MIL operation	2 driving cycles
Sequence of operation	None

TYPICAL ENABLING CONDITIONS

All:

The monitor will run whenever this DTC is not present.	None
Ignition switch	ON
Battery voltage	10.5 V or more

cardiagn.com

TYPICAL MALFUNCTION THRESHOLDS

1. One of the following conditions is met: Condition (A), (B), (C) and (D)

Condition (A)

If 2 or more of the following signal outputs exist at the same time

P switch	ON
N switch	ON
R switch	ON
D switch	ON
3 switch	ON
2 switch	ON

Condition (B)

If 2 or more of the following signal outputs exist at the same time

NSW switch	ON
R switch	ON
D switch	ON
3 switch	ON
2 switch	ON

Condition (C)

All of following conditions are met

NSW switch	OFF
P switch	OFF
N switch	OFF
R switch	OFF
D switch	OFF
3 switch	OFF
2 switch	OFF

Condition (D)

Both (i) and (ii) are met

(i) One of the following is met

NSW switch	ON
P switch	ON
N switch	ON
R switch	ON

(ii) One of the following is met

4 switch	ON
L switch	ON

COMPONENT OPERATING RANGE

Park/neutral Position switch	The park/neutral position switch sends only one signal to the ECM.

cardiagn.com

WIRING DIAGRAM

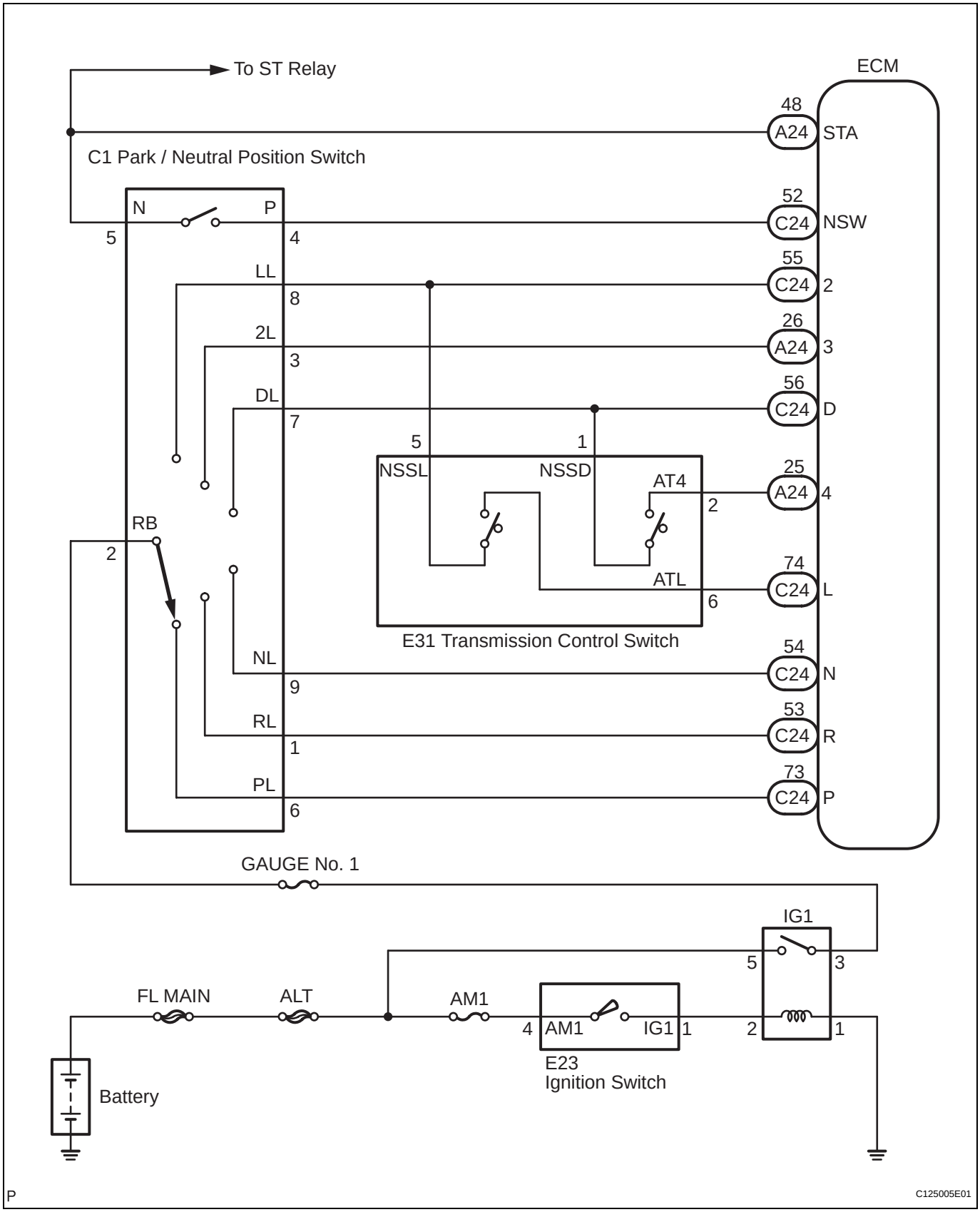

cardiagn.com

INSPECTION PROCEDURE

HINT:

According to the DATA LIST displayed by the intelligent tester, you can read the value of the switch, sensor, actuator and so on without parts removal. Reading the DATA LIST as the first step of troubleshooting is one method to shorten labor time.

NOTICE:

In the table below, the values listed under "Normal Condition" are reference values. Do not depend solely on these reference values when deciding whether a part is faulty or not.

1. READ DATA LIST

(a) Turn the ignition switch off.
(b) Connect the intelligent tester together with the CAN VIM (controller area network vehicle interface module) to the DLC3.
(c) Turn the ignition switch on (IG).
(d) Turn on the tester.
(e) Select the item "DIAGNOSIS / OBD/MOBD / ECT / DATA LIST".
(f) According to the display on the tester, read the "DATA LIST".

Item	Measurement Item / Range (Display)	Normal Condition	Diagnostic Note
PNP SW [NSW]	PNP SW Status / ON or OFF	Shift lever position is; P and N: ON Except P or N: OFF	When the shift lever position displayed on the intelligent tester differs from the actual position, adjustment of the PNP switch or the shift cable may be incorrect.
REVERSE	PNP SW Status / ON or OFF	Shift lever position is; R: ON Except R: OFF	When the shift lever position displayed on the intelligent tester differs from the actual position, adjustment of the PNP switch or the shift cable may be incorrect.
DRIVE	PNP SW Status / ON or OFF	Shift lever position is; D and 4: ON Except D and 4: OFF	When the shift lever position displayed on the intelligent tester differs from the actual position, adjustment of the PNP switch or the shift cable may be incorrect.
2ND	PNP SW Status / ON or OFF	Shift lever position is; 2 and L: ON Except 2 and L: OFF	When the shift lever position displayed on the intelligent tester differs from the actual position, adjustment of the PNP switch or the shift cable may be incorrect.
LOW	PNP SW Status / ON or OFF	Shift lever position is; L: ON Except L: OFF	When the shift lever position displayed on the intelligent tester differs from the actual position, adjustment of the PNP switch or the shift cable may be incorrect.
4TH/DRIVE	PNP SW Status / ON or OFF	Shift lever position is; 4: ON Except 4: OFF	When the shift lever position displayed on the intelligent tester differs from the actual position, adjustment of the PNP switch or the shift cable may be incorrect.
3RD	PNP SW Status / ON or OFF	Shift lever position is; 3: ON Except 3: OFF	When the shift lever position displayed on the intelligent tester differs from the actual position, adjustment of the PNP switch or the shift cable may be incorrect.

cardiagn.com

1 CHECK HARNESS AND CONNECTOR (BATTERY - PARK/NEUTRAL POSITION)

Wire Harness Side:

(Connector Front View):

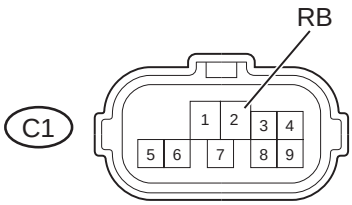

Y C117645E06

(a) Disconnect the park/neutral position switch connector.
(b) Turn the ignition switch on (IG).
(c) Measure voltage according to the value(s) in the table below.

Standard voltage

Tester Connection	Specified Condition
2 - Body ground	10 to 14 V

NG → **REPAIR OR REPLACE HARNESS OR CONNECTOR**

OK

2 CHECK HARNESS AND CONNECTOR (OUTPUT SIGNAL)

Wire Harness Side:

(Connector Front View):

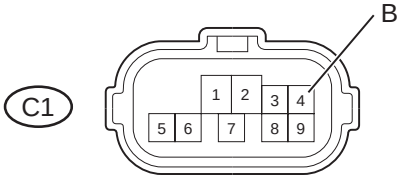

Y C117645E07

(a) Turn the ignition switch on (IG).
(b) Measure voltage according to the value(s) in the table below.

Standard voltage

Tester Connection	Specified Condition
4 - Body ground	10 to 14 V

NG → **Go to step 8**

OK

cardiagn.com

3 INSPECT PARK/NEUTRAL POSITION SWITCH ASSEMBLY

Switch Side:

(Connector Front View):

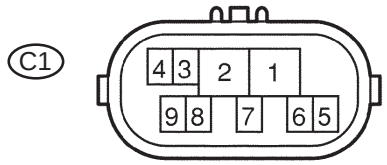

P

C110340E34

(a) Measure resistance according to the value(s) in the table below when the shift lever is moved to each position.
Standard resistance

Shift Position	Tester Connection	Specified Condition
P	2 - 6 and 4 - 5	Below 1 Ω
Except P		10 kΩ or higher
R	2 - 1	Below 1 Ω
Except R		10 kΩ or higher
N	2 - 9 and 4 - 5	Below 1 Ω
Except N		10 kΩ or higher
D and 4	2 - 7	Below 1 Ω
Except D and 4		10 kΩ or higher
3	2 - 3	Below 1 Ω
Except 3		10 kΩ or higher
2 and L	2 - 8	Below 1 Ω
Except 2 and L		10 kΩ or higher

NG → **REPLACE PARK/NEUTRAL POSITION SWITCH ASSEMBLY**

OK

4 CHECK HARNESS AND CONNECTOR (PARK/NEUTRAL POSITION SWITCH - ECM)

Wire Harness Side:

(Connector Front View):

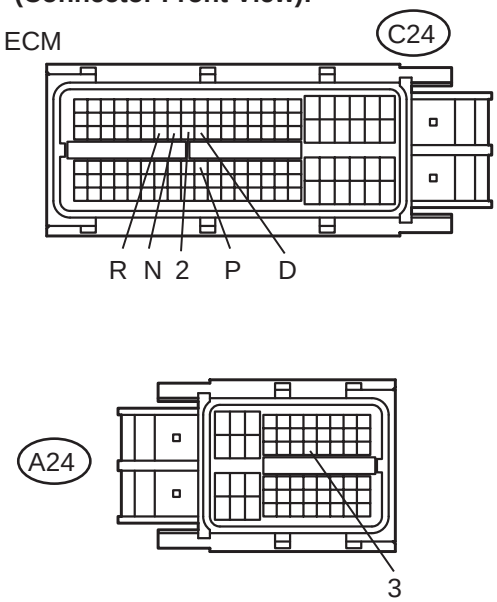

C136857E03

(a) Connect the park/neutral position switch connector.
(b) Disconnect the ECM connectors.
(c) Turn the ignition switch on (IG), and measure the voltage according to the value(s) in the table below when the shift lever is moved to each position.

cardiagn.com

Standard voltage

Shift Position	Tester Connection	Specified Condition
P	C24-73 (P) - Body ground	10 to 14 V
Except P		Below 1 V
N	C24-54 (N) - Body ground	10 to 14 V
Except N		Below 1 V
R	C24-53 (R) - Body ground	10 to 14 V*
Except R		Below 1 V
D and 4	C24-56 (D) - Body ground	10 to 14 V
Except D and 4		Below 1 V
3	A24-26 (3) - Body ground	10 to 14 V
Except 3		Below 1 V
2 and L	C24-55 (2) - Body ground	10 to 14 V
Except 2 and L		Below 1 V

HINT:

*: The voltage will drop slightly due to lighting up of the back up light.

NG → **REPAIR OR REPLACE HARNESS OR CONNECTOR**

OK

5 CHECK HARNESS AND CONNECTOR (PARK/NEUTRAL POSITION SWITCH - TRANSMISSION CONTROL SWITCH)

Wire Harness Side:

(Connector Front View):

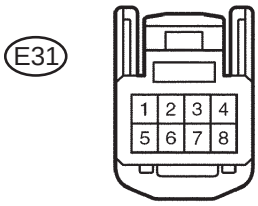

C110345E17

(a) Disconnect the transmission control switch connector of shift lock control unit assembly.

(b) Measure the voltage according to the value(s) in the table below when the shift lever is moved to each position.

Standard voltage

Shift Position	Tester Connection	Specified Condition
D and 4	1 - Body ground	10 to 14 V
Except D and 4		Below 1 V
2 and L	5 - Body ground	10 to 14 V
Except 2 and L		Below 1 V

NG → **REPAIR OR REPLACE HARNESS OR CONNECTOR**

OK

cardiagn.com

6 INSPECT TRANSMISSION CONTROL SWITCH

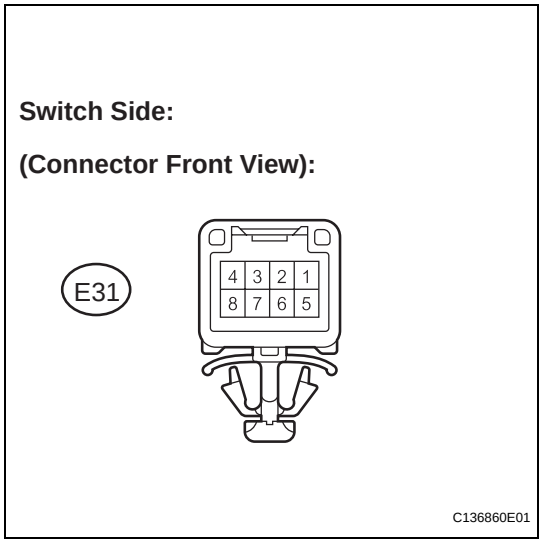

(a) Measure the resistance according to the value(s) in the table below when the shift lever is moved to each position.

Standard resistance

Shift Position	Tester Connection	Specified Condition
4 and 3	1 - 2	Below 1 Ω
Except 4 and 3		10 kΩ or higher
L	5 - 6	Below 1 Ω
Except L		10 kΩ or higher

NG → **REPLACE TRANSMISSION CONTROL SWITCH**

OK

7 CHECK HARNESS AND CONNECTOR (TRANSMISSION CONTROL SWITCH - ECM)

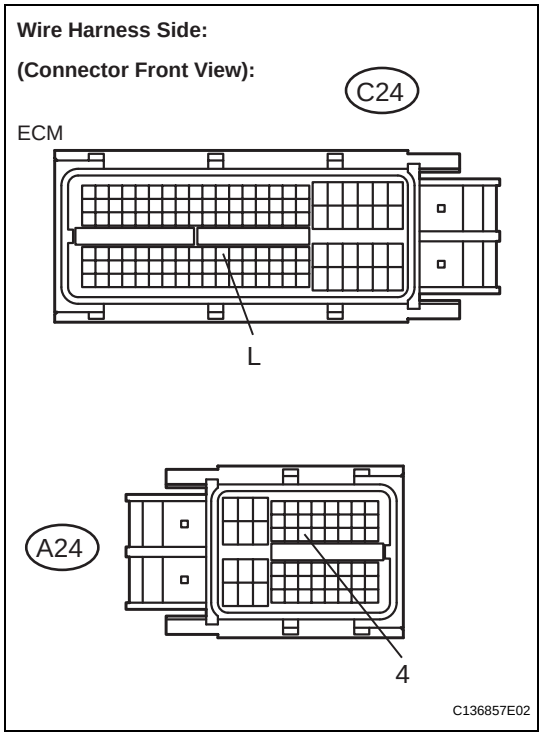

(a) Connect the transmission control switch connector of shift lock control unit assembly.

(b) Turn the ignition switch to the ON position, and measure the voltage according to the value(s) in the table below when the shift lever is moved to each position.

Standard voltage

Shift Position	Tester Connection	Specified Condition
4	A24-25 (4) - Body ground	10 to 14 V
Except 4		Below 1 V
L	C24-74 (L) - Body ground	10 to 14 V
Except L		Below 1 V

cardiagn.com

NG → **REPAIR OR REPLACE HARNESS OR CONNECTOR**

OK

REPLACE ECM

8 CHECK HARNESS AND CONNECTOR (PARK/NEUTRAL POSITION SWITCH - ECM)

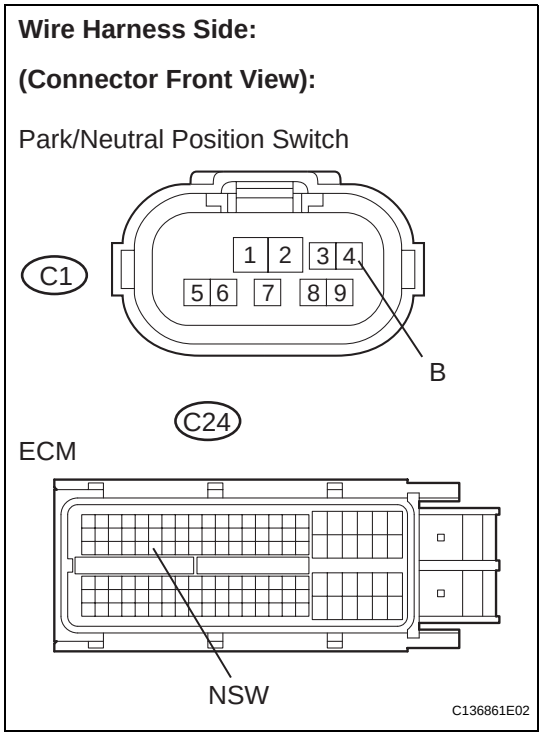

(a) Disconnect the ECM connectors.
(b) Turn the ignition switch off.
(c) Measure resistance according to the value(s) in the table below.

Standard resistance (Check for open)

Tester Connection	Specified Condition
B (C1-4) - NSW (C24-52)	Below 1 Ω

Standard resistance (Check for short)

Tester Connection	Specified Condition
B (C1-4) or NSW (C24-52) - Body ground	10 kΩ or higher

NG → **REPAIR OR REPLACE HARNESS OR CONNECTOR**

OK

REPLACE ECM

cardiagn.com

DTC	P0710	Transmission Fluid Temperature Sensor "A" Circuit

DTC	P0712	Transmission Fluid Temperature Sensor "A" Circuit Low Input

DTC	P0713	Transmission Fluid Temperature Sensor "A" Circuit High Input

DESCRIPTION

The ATF (Automatic Transmission Fluid) temperature sensor converts the fluid temperature into a resistance value which is input into the ECM.
The ECM applies a voltage to the temperature sensor through ECM terminal THO1.
The sensor resistance changes with the transmission fluid temperature. As the temperature becomes higher, the sensor resistance decreases.
One terminal of the sensor is grounded so that the sensor resistance decreases and the voltage goes down as the temperature becomes higher.
The ECM calculates the fluid temperature based on the voltage signal.

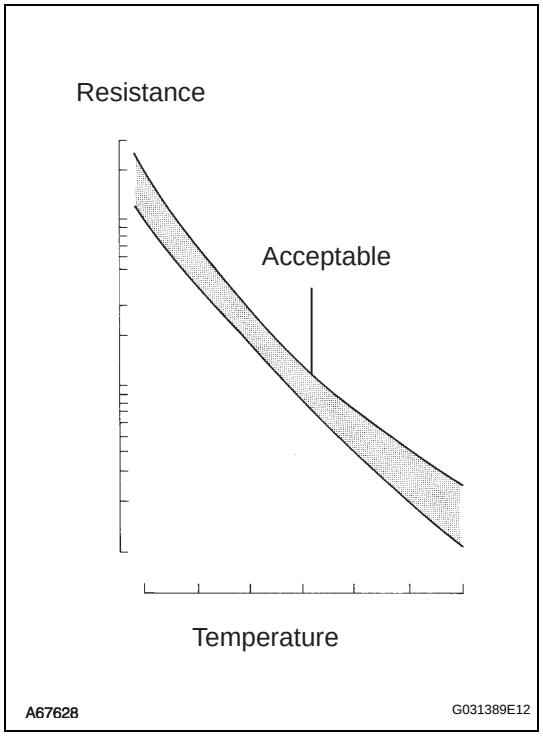

DTC No.	DTC Detection Condition	Trouble Area
P0710	(a) and (b) are detected momentarily within 0.5 sec. when neither P0712 nor P0713 is detected (1-trip detection logic) (a) ATF temperature sensor resistance is less than 79 Ω. (b) ATF temperature sensor resistance is more than 156 kΩ. HINT: Within 0.5 sec., the malfunction switches from (a) to (b) or from (b) to (a)	• Open or short in ATF temperature sensor circuit • Transmission wire (ATF temperature sensor) • ECM
P0712	ATF temperature sensor resistance is less than 79 Ω for 0.5 sec. or more (1-trip detection logic)	• Short in ATF temperature sensor circuit • Transmission wire (ATF temperature sensor) • ECM

cardiagn.com

DTC No.	DTC Detection Condition	Trouble Area
P0713	ATF temperature sensor resistance is more than 156 kΩ when 15 minutes or more have elapsed after the engine start DTC is detected for 0.5 sec. or more (1-trip detection logic)	• Open in ATF temperature sensor circuit • Transmission wire (ATF temperature sensor) • ECM

MONITOR DESCRIPTION

These DTCs indicate an open or short in the automatic transmission fluid (ATF) temperature sensor (TFT sensor) circuit. The automatic transmission fluid (ATF) temperature sensor converts ATF temperature to an electrical resistance value. Based on the resistance, the ECM determines the ATF temperature, and the ECM detects an opens or shorts in the ATF temperature circuit. If the resistance value of the ATF temperature is less than 79 Ω *1or more than 156 kΩ *2, the ECM interprets this as a fault in the ATF sensor or wiring. The ECM will turn on the MIL and store the DTC.
*1: 150°C (302°F) or more is indicated regardless of the actual ATF temperature.
*2: -40°C (-40°F) is indicated regardless of the actual ATF temperature.
HINT:
The ATF temperature can be checked on the intelligent tester display.

MONITOR STRATEGY

Related DTCs	P0710: ATF temperature sensor/Range check (Chattering) P0712: ATF temperature sensor/Range check (Low resistance) P0713: ATF temperature sensor/Range check (High resistance)
Required sensors/Components	ATF temperature sensor (TFT sensor)
Frequency of operation	Continuous
Duration	0.5 sec.
MIL operation	Immediate
Sequence of operation	None

TYPICAL ENABLING CONDITIONS

P0710: Range check (Chattering)
P0712: Range check (Low resistance)

The monitor will run whenever these DTCs are not present.	None
The typical enabling condition is not available.	-

P0713: Range check (High resistance)

The monitor will run whenever this DTC is not present.	None
Time after engine start	15 min. or more

TYPICAL MALFUNCTION THRESHOLDS

P0710: Range check (Chattering)

TFT (Transmission fluid temperature) sensor resistance	Less than 79 Ω or More than 156 kΩ

P0712: Range check (Low resistance)

TFT sensor resistance	Less than 79 Ω

P0713: Range check (High resistance)

TFT sensor resistance	More than 156 kΩ

AX

COMPONENT OPERATING RANGE

TFT sensor.	Atmospheric temperature to approx. 130°C (266°F)

cardiagn.com

WIRING DIAGRAM

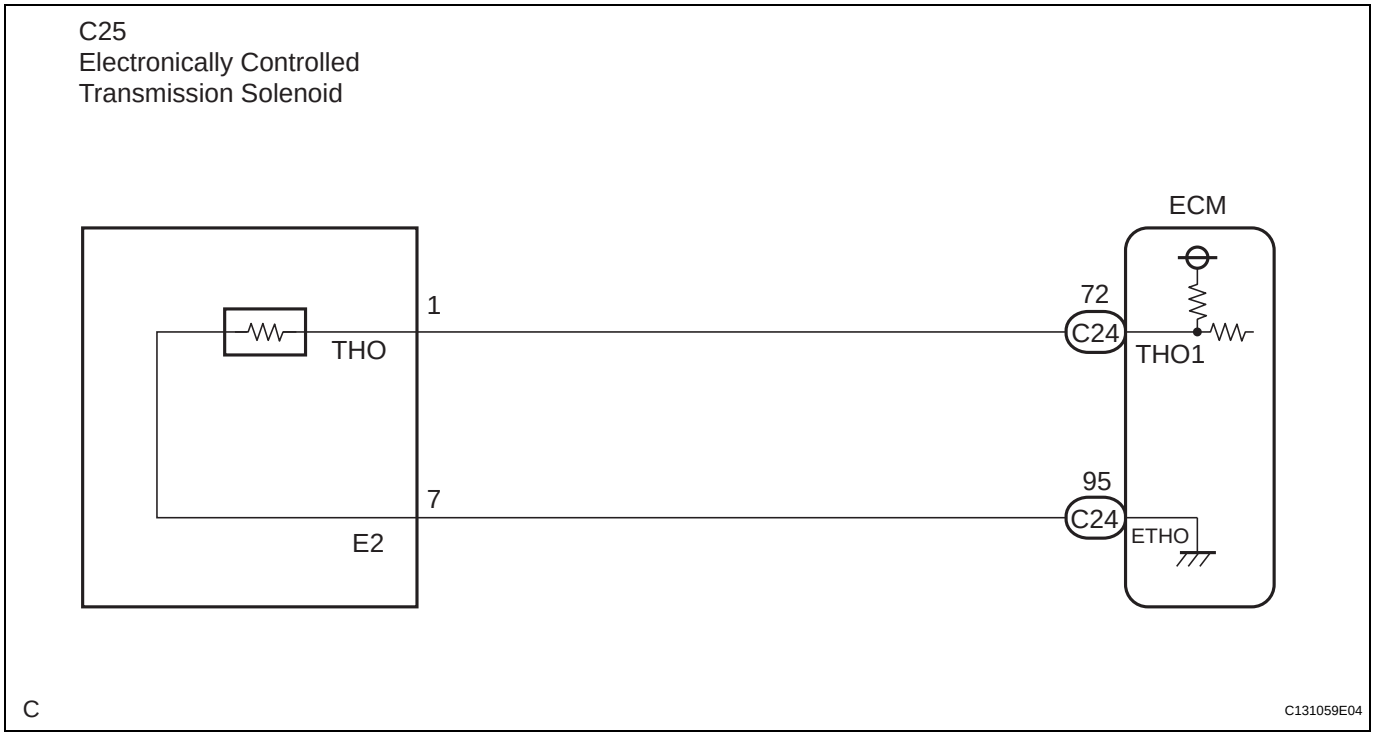

INSPECTION PROCEDURE

HINT:
According to the DATA LIST displayed by the OBD II scan tool or intelligent tester, you can read the value of the switch, sensor, actuator and so on without parts removal. Reading the DATA LIST as the first step of troubleshooting is one method to shorten labor time.

NOTICE:
In the table below, the value listed under "Normal Condition" are reference values. Do not depend solely on these reference values when deciding whether apart is faulty or not.

1. READ DATA LIST

(a) Warm up the engine.
(b) Turn the ignition switch off.
(c) Connect the intelligent tester together with the CAN VIM (controller area network vehicle interface module) to the DLC3.
(d) Turn the ignition switch on (IG).
(e) Turn on the tester.
(f) Select the item "DIAGNOSIS / OBD/MOBD / ECT / DATA LIST".
(g) According to the display on the tester, read the "DATA LIST".

Item	Measurement Item/ Range (display)	Normal Condition
AT FLUID TEMP	ATF Temp. Sensor Value/ min.: -40°C (-40°F) max.: 215°C (419°F)	Approx. 80°C (176°F) (After Stall Test)

HINT:
When DTC P0712 is output and OBD II scan tool or intelligent tester output is 150°C (302°F), there is a short circuit.
When DTC P0713 is output and OBD II scan tool or intelligent tester output is -40°C (-40°F), there is an open circuit.

cardiagn.com

Measure the resistance between terminal THO1 (THO) and body ground.

Temperature Displayed	Malfunction
-40°C (-40°F)	Open circuit
150°C (302°F) or more	Short circuit

HINT:
If a circuit related to the ATF temperature sensor become open, P0713 is immediately set (in 0.5 second).
When P0713 is set, P0711 cannot be detected.
It is not necessary to inspect the circuit when P0711 is set.

1 INSPECT TRANSMISSION WIRE (ATF TEMPERATURE SENSOR)

Transmission Wire Side:

(Connector Front View):

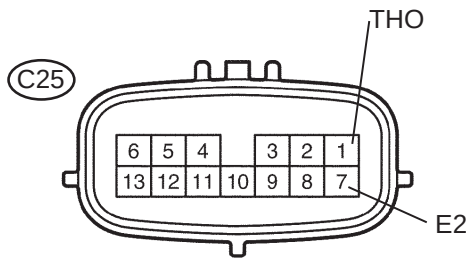

(a) Disconnect the transmission wire connector from the transaxle.
(b) Measure the resistance according to the value(s) in the table below.

Standard resistance

Tester Connection	Specified Condition
1 (THO) - 7 (E2)	**79 Ω to 156 kΩ**
1 (THO) - Body ground	**10 kΩ or higher**
7 (E2) - Body ground	**10 kΩ or higher**

HINT:
If the resistance is out of the specified range with either the ATF temperature shown in the table below, the driveability of the vehicle may decrease.

ATF Temperature	Specified Condition
20°C (68°F)	3 to 5 kΩ
110°C (230°F)	0.22 to 0.28 kΩ

NG → **REPAIR OR REPLACE TRANSMISSION WIRE**

OK

cardiagn.com

2 CHECK HARNESS AND CONNECTOR (TRANSMISSION WIRE - ECM)

Wire Harness Side:

(Connector Front View):

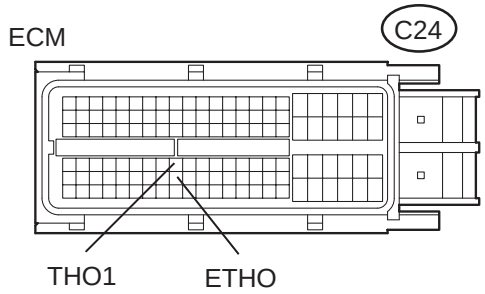

A136781E01

(a) Connect the transmission wire connector to the transaxle.
(b) Disconnect the ECM connectors.
(c) Measure the resistance according to the value(s) in the table below.
Standard resistance

Tester Connection	Specified Condition
C24-72 (THO1) - C24-95 (ETHO)	79 Ω to 156 kΩ

(d) Measure the resistance according to the value(s) in the table below.
Standard resistance (Check for short)

Tester Connection	Specified Condition
C24-72 (THO1) - Body ground	10 kΩ or higher
C24-95 (ETHO) - Body ground	

NG → **REPAIR OR REPLACE HARNESS OR CONNECTOR**

OK

REPLACE ECM

cardiagn.com

DTC	P0711	Transmission Fluid Temperature Sensor "A" Performance

DESCRIPTION

The ATF (Automatic Transmission Fluid) temperature sensor converts the fluid temperature into a resistance value which is input into the ECM.

DTC No.	DTC Detection Condition	Trouble Area
P0711	(A) Both (a) and (b) are detected: (2-trip detection logic) (a) Intake air and engine coolant temperatures are more than -10°C (14°F) at engine start (b) After normal driving for over 19 min. and 9 km (6 mile) or more, ATF temp. is less than 20°C (68°F) (B) When engine coolant temp. is less that 35°C (95°F) at engine start, the ATF temp. is 110°C (230°F) or more after 17 min. of engine start (2-trip detection logic).	Transmission wire (ATF temperature sensor)

MONITOR DESCRIPTION

The ATF temperature sensor converts the ATF temperature to an electrical resistance value. Based on the resistance, the ECM determines the ATF temperature and detects an open or short in the ATF temperature circuit or a fault in the ATF temperature sensor.
After running the vehicle for a certain period, the ATF temperature should increase. If the ATF temperature is below 20°C (68°F) after running the vehicle for a certain period, the ECM interprets this as a fault, and turns on the MIL.
When the ATF temperature is 110°C (230°F) or more after 17 minutes of engine cold start, the ECM also determines this as a fault, turns on the MIL, and stores the DTC.

MONITOR STRATEGY

Related DTCs	P0711: ATF temperature sensor/Rationality check
Required sensors/Components	ATF temperature sensor (TFT sensor)
Frequency of operation	Continuous
Duration	3 sec.: Condition (A) 10 sec.: Condition (B)
MIL operation	2 driving cycles
Sequence of operation	None

TYPICAL ENABLING CONDITIONS

All:

The monitor will run whenever this DTC is not present.	None
Time after engine start	16 min. and 40 sec. or more
ECT (Engine coolant temperature)	-15°C (5°F) or more
ATF sensor circuit	Not circuit malfunction
ECT sensor circuit	Not circuit malfunction
IAT sensor circuit	Not circuit malfunction
ETCS	Not circuit malfunction

Condition (A):

Time After engine start	18 min. and 20 sec.
Driving distance after engine start	9 km (5.6 mile) or more
IAT (Intake air temperature) (12 sec. after starting engine)	-10°C (14°F) or more
ECT (12 sec. after starting engine)	-10°C (14°F) or more

cardiagn.com

Condition (B):

ECT (Current temperature)	60°C (140°F) or more
ECT (12 sec. after engine start)	Less than 35°C (95°F)

TYPICAL MALFUNCTION THRESHOLDS

Condition (A):

ATF temperature sensor	Less than 20°C (68°F)

Condition (B):

ATF temperature sensor	110°C (230°F) or more

COMPONENT OPERATING RANGE

ATF temperature sensor	Atmospheric temperature to approx. 130°C (266°F)

WIRING DIAGRAM

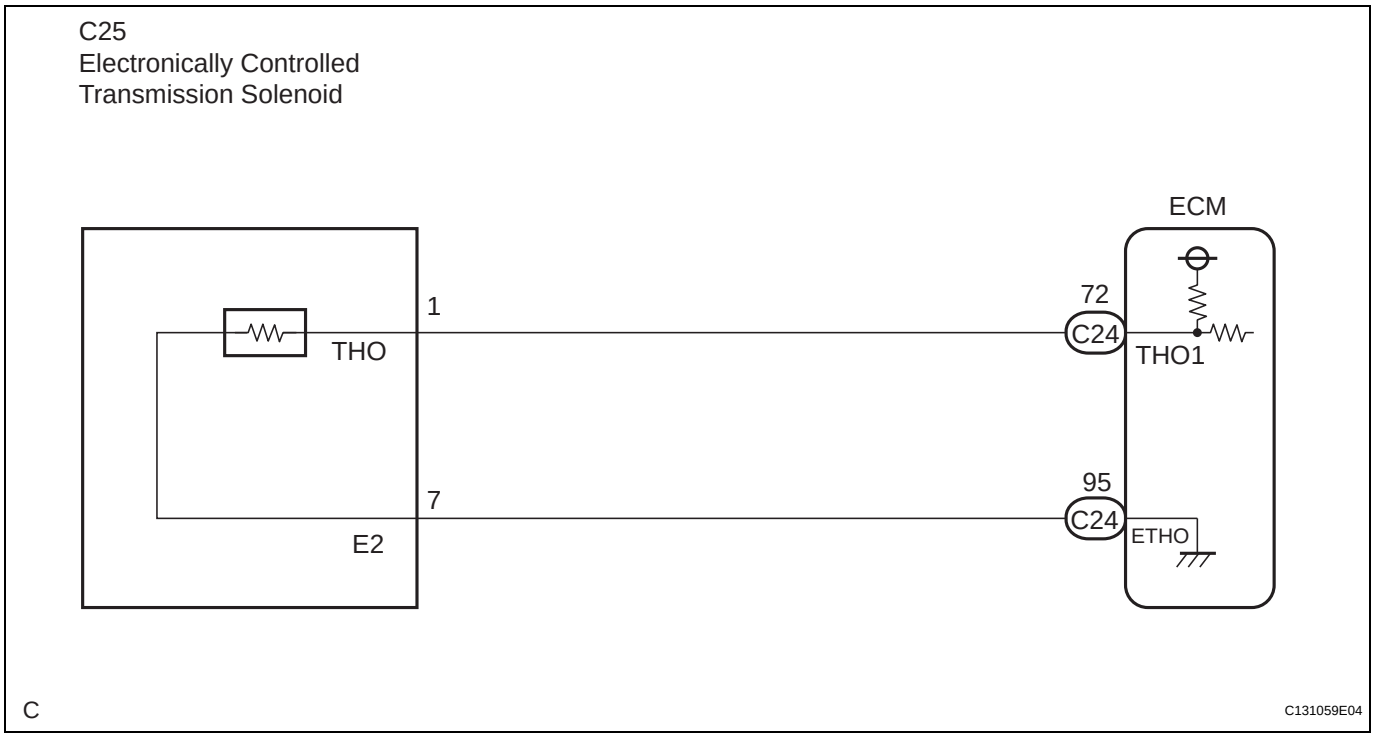

INSPECTION PROCEDURE

HINT:

According to the DATA LIST displayed by the OBD II scan tool or intelligent tester, you can read the value of the switch, sensor, actuator and so on without parts removal. Reading the DATA LIST as the first step of troubleshooting is one method to shorten labor time.

NOTICE:

In the table below, the value listed under "Normal Condition" are reference values. Do not depend solely on these reference values when deciding whether apart is faulty or not.

1. READ DATA LIST

(a) Warm up the engine.

(b) Turn the ignition switch off.

(c) Connect the intelligent tester together with the CAN VIM (controller area network vehicle interface module) to the DLC3.

cardiagn.com

(d) Turn the ignition switch on (IG).
(e) Turn on the tester.
(f) Select the item "DIAGNOSIS / OBD/MOBD / ECT / DATA LIST".
(g) According to the display on the tester, read the "DATA LIST".

Item	Measurement Item/ Range (display)	Normal Condition
AT FLUID TEMP	ATF Temp. Sensor Value/ min.: -40°C (-40°F) max.: 215°C (419°F)	Approx. 80°C (176°F) (After Stall Test)

HINT:
When DTC P0712 is output and OBD II scan tool or intelligent tester output is 150°C (302°F), there is a short circuit.
When DTC P0713 is output and OBD II scan tool or intelligent tester output is -40°C (-40°F), there is an open circuit.
Measure the resistance between terminal THO1 (THO) and body ground.

Temperature Displayed	Malfunction
-40°C (-40°F)	Open circuit
150°C (302°F) or more	Short circuit

HINT:
If a circuit related to the ATF temperature sensor becomes open, P0713 is immediately set (in 0.5 second).
When P0713 is set, P0711 cannot be detected.
It is not necessary to inspect the circuit when P0711 is set.

1 CHECK OTHER DTCS OUTPUT (IN ADDITION TO DTC P0711)

(a) Connect the OBD II scan tool or the intelligent tester to the DLC3.
(b) Turn the ignition switch on (IG) and push the OBD II scan tool or the intelligent tester main switch ON.
(c) When you use intelligent tester:
Select the item "DIAGNOSIS / ENHANCED OBD II / DTC INFO / CURRENT CODES".
(d) Read the DTCs using the OBD II scan tool or the intelligent tester.

Result

Display (DTC output)	Proceed to
Only "P0711" is output	**A**
"P0711" and other DTCs	**B**

HINT:
If any other codes besides "P0711" are output, perform troubleshooting for those DTCs first.

B → **GO TO DTC CHART**

A

2 CHECK TRANSMISSION FLUID LEVEL

OK:
Automatic transmission fluid level is correct.

cardiagn.com

NG → ADD FLUID

OK

REPLACE TRANSMISSION WIRE (ATF TEMPERATURE SENSOR)

cardiagn.com

DTC	P0717	Turbine Speed Sensor Circuit No Signal

DESCRIPTION

This sensor detects the rotation speed of the input turbine. By comparing the input turbine speed signal (NT) with the counter gear speed sensor signal (NC), the ECM detects the shift timing of the gears and appropriately controls the engine torque and hydraulic pressure according to various conditions. Thus, providing smooth gear shift.

DTC No.	DTC Detection Condition	Trouble Area
P0717	ECM detects conditions (a), (b) and (c) continuously for 5 sec. or more: (1-trip detection logic) (a) Vehicle speed: 50 km/h (31 mph) or more (b) Park/neutral position switch (STAR and R) is OFF (c) Speed sensor (NT): less than 300 rpm	• Open or short in transmission revolution sensor NT (speed sensor NT) circuit • Transmission revolution sensor NT (speed sensor NT) • ECM • Automatic transaxle assembly

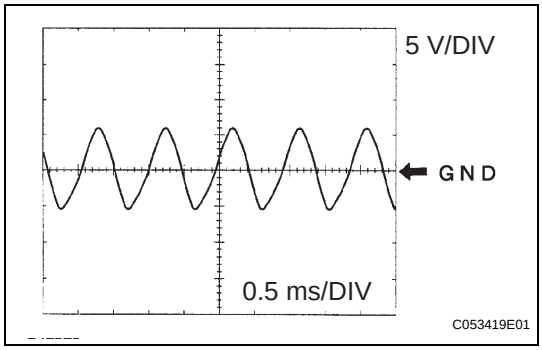

Reference (Using an oscilloscope):
Check the waveform between terminals NT+ and NT- of the ECM connector.
Standard: Refer to the illustration.

Terminal	Tool setting	Vehicle condition
NT+ - NT-	**5 V/DIV, 0.5ms/DIV**	**Vehicle speed 20 km/h (12 mph)**

MONITOR DESCRIPTION

The NT terminal of the ECM detects a revolution signal from the speed sensor (NT) (input RPM). The ECM calculates a gearshift comparing the speed sensor (NT) with the speed sensor (NC).
While the vehicle is operating in 2nd, 3rd, 4th or 5th gear in the shift position of D, if the input shaft revolution is less than 300 rpm *1 although the output shaft revolution is more than 1,000 rpm *2, the ECM detects the trouble, illuminates the MIL and stores the DTC.
*1: Pulse is not output or is irregularly output.
*2: The vehicle speed is 50 km/h (31 mph) or more.

MONITOR STRATEGY

Related DTCs	P0717: Speed sensor (NT) / Verify pulse input
Required sensors/Components	Speed sensor (NT), Speed sensor (NC)
Frequency of operation	Continuous
Duration	5 sec.
MIL operation	Immediate
Sequence of operation	None

AX

TYPICAL ENABLING CONDITIONS

The monitor will run whenever this DTC is not present.	P0500 (VSS) P0748, P0778, P0798 (Shift solenoid valve (range))

cardiagn.com

Shift change	Shift change is completed and before starting next shift change operation
ECM selected gear	2nd, 3rd, 4th or 5th
Output shaft rpm	1,000 rpm or more
NSW switch	OFF
R switch	OFF
L switch	OFF
Engine	Running
Battery voltage	8 V or more
Ignition switch	ON
Starter	OFF

TYPICAL MALFUNCTION THRESHOLDS

Sensor signal rpm	Less than 300 rpm

COMPONENT OPERATING RANGE

Speed sensor (NT)	Turbine speed is equal to engine speed with lock-up ON

WIRING DIAGRAM

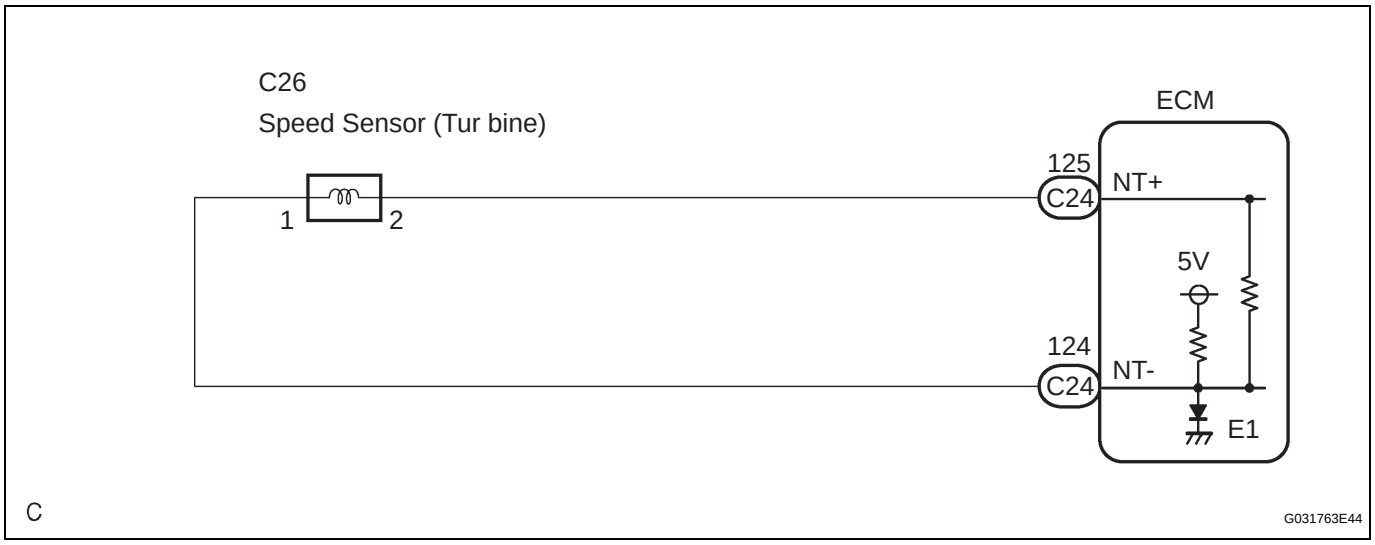

INSPECTION PROCEDURE

1	INSPECT SPEED SENSOR INSTALLATION

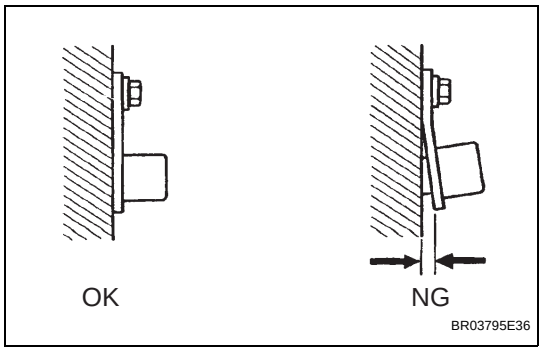

(a) Check the speed sensor installation.
OK:
The installation bolt is tightened properly and there is no clearance between the sensor and transaxle case.

NG → **REPLACE SPEED SENSOR (NT)**

cardiagn.com

OK

2 INSPECT SPEED SENSOR (NT)

Sensor Side:

(Connector Front View):

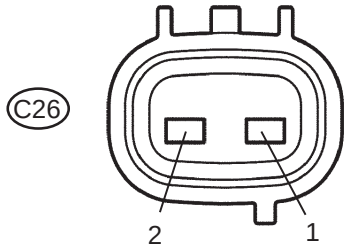

C110343E37

(a) Disconnect the speed sensor connector from the transaxle.
(b) Measure the resistance according to the value(s) in the table below.
Standard resistance

Tester Connection	Specified Condition 20 °C (68 °F)
1 - 2	560 to 680 Ω

NG → **REPLACE SPEED SENSOR (NT)**

OK

3 CHECK HARNESS AND CONNECTOR (SPEED SENSOR - ECM)

Wire Harness Side:

(Connector Front View):

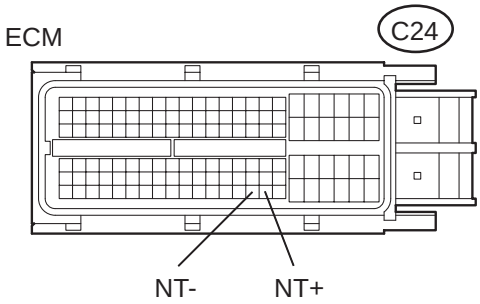

A136781E02

(a) Connect the speed sensor connector.
(b) Disconnect the ECM connector.
(c) Measure the resistance according to the value(s) in the table below.
Standard resistance

Tester Connection	Specified Condition 20°C (68°F)
C24-125 (NT+) - C24-124 (NT-)	560 to 680 Ω

(d) Measure the resistance according to the value(s) in the table below.
Standard resistance (Check for short)

Tester Connection	Specified Condition
C24-125 (NT+) - Body ground	10 kΩ or higher
C24-124 (NT-) - Body ground	

NG → **REPAIR OR REPLACE HARNESS OR CONNECTOR**

OK

REPLACE ECM

cardiagn.com

DTC	P0724	Brake Switch "B" Circuit High

DESCRIPTION

The purpose of this circuit is to prevent the engine from stalling while driving in lock-up condition when brakes are suddenly applied.
When the brake pedal is depressed, this switch sends a signals to the ECM. Then the ECM cancels the operation of the lock-up clutch while braking is in progress.

DTC No.	DTC Detecting Condition	Trouble Area
P0724	The stop light switch remains ON even when the vehicle is driven in a STOP (less than 3 km/h (2 mph) and GO (30 km/h (19 mph) or more) fashion 5 times. (2-trip detection logic).	• Short in stop light switch circuit • Stop light switch • ECM

MONITOR DESCRIPTION

This DTC indicates that the stop light switch remains on. When the stop light switch remains ON during "stop and go" driving, the ECM interprets this as a fault in the stop light switch and the MIL comes on and the ECM stores the DTC. The vehicle must stop (less than 3 km/h (2 mph)) and go (30 km/h (19 mph) or more) 5 times for two driving cycles in order to detect a malfunction.

MONITOR STRATEGY

Related DTCs	P0724: Stop light switch/Rationality
Required sensors/Components	Stop light switch, Vehicle speed sensor
Frequency of operation	Continuous
Duration	GO and STOP 5 times
MIL operation	2 driving cycles
Sequence of operation	None

TYPICAL ENABLING CONDITIONS

The monitor will run whenever this DTC is not present.	None
Ignition switch	ON
Starter	OFF
Battery voltage	8 V or more
GO (Vehicle speed is 30 km/h (18.63 mph) or more)	Once
STOP (Vehicle speed is less than 3 km/h (1.86 mph))	Once

TYPICAL MALFUNCTION THRESHOLDS

Brake switch	Remain ON during GO and STOP 5 times

WIRING DIAGRAM

See page ES-234.

cardiagn.com

INSPECTION PROCEDURE

1 READ VALUE OF DATA LIST

HINT:
According to the DATA LIST displayed by the OBD II scan tool or intelligent tester, you can read the value of the switch, sensor, actuator and so on without parts removal. Reading the DATA LIST as the first step of troubleshooting is one method to shorten labor time.

(a) Warm up the engine.
(b) Turn the ignition switch off.
(c) Connect the OBD II scan tool or intelligent tester together with the CAN VIM (controller area network vehicle interface module) to the DLC3.
(d) Turn the ignition switch on (IG).
(e) Turn on the tester..
(f) Select the item "DIAGNOSIS / OBD/MOBD / ECT / DATA LIST".
(g) According to the display on the tester, read the "DATA LIST".

DATA LIST

Item	Measurement Item/ Range (display)	Normal Condition
STOP LIGHT SW	Stop light SW Status/ ON or OFF	• Brake pedal is depressed: ON • Brake pedal is released: OFF

NOTICE:
In the table below, the value listed under "Normal Condition" are reference values. Do not depend solely on these reference values when deciding whether apart is faulty or not.

OK → **Go to step 3**

NG

2 INSPECT STOP LIGHT SWITCH ASSEMBLY

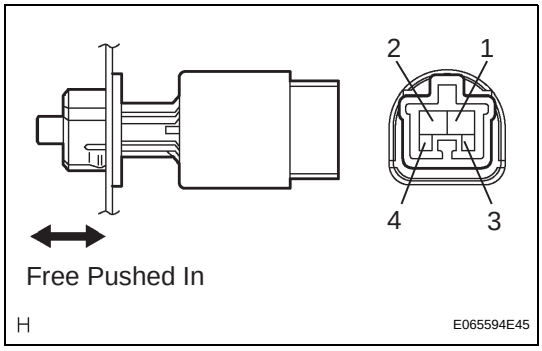

(a) Remove the stop light switch assembly.
(b) Measure the resistance according to the value(s) in the table below.

Standard resistance

Switch position	Tester Connection	Specified Condition
Switch pin free	1 - 2	Below 1 Ω
Switch pin pushed in		10 kΩ or higher
Switch pin free	3 - 4	10 kΩ or higher
Switch pin pushed in		Below 1 Ω

NG → **REPLACE STOP LIGHT SWITCH ASSEMBLY**

OK

cardiagn.com

3 CHECK HARNESS AND CONNECTOR (STOP LIGHT SWITCH ASSEMBLY - ECM)

Wire Harness Side:

(Connector Front View):

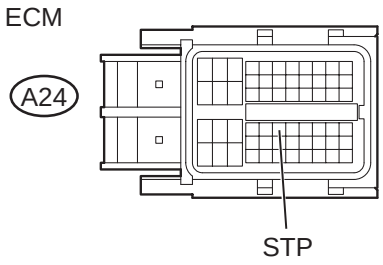

A115671E29

(a) Install the stop light switch assembly.

(b) Measure the voltage according to the value(s) in the table below when the brake pedal is depressed and released.

Standard voltage

Condition	Tester Connection	Specified Condition
Brake pedal is depressed	A24-36 (STP) - Body ground	10 to 14 V
Brake pedal is released		Below 1 V

NG → **REPAIR OR REPLACE HARNESS OR CONNECTOR**

OK

REPLACE ECM

cardiagn.com

DTC	P0741	Torque Converter Clutch Solenoid Performance (Shift Solenoid Valve DSL)

SYSTEM DESCRIPTION

The ECM uses the signals from the throttle position sensor, air-flow meter, turbine (input) speed sensor, intermediate (counter) shaft speed sensor and crankshaft position sensor to monitor the engagement condition of the lock-up clutch.
Then the ECM compares the engagement condition of the lock-up clutch with the lock-up schedule in the ECM memory to detect a mechanical problems of the shift solenoid valve DSL, valve body and torque converter clutch.

DTC No.	DTC Detection CondS1ition	Trouble Area
P0741	Lock-up does not occur when driving in the lock-up range (normal driving at 80 km/h [50 mph]), or lock up remains ON in the lock-up OFF range. (2-trip detection logic)	• Shift solenoid valve DSL remains open or closed • Valve body is blocked • Torque converter clutch • Automatic transaxle (clutch, brake or gear etc.) • Line pressure is too low

MONITOR DESCRIPTION

Torque converter lock-up is controlled by the ECM based on the speed sensor (NT), speed sensor (NC), engine rpm, engine load, engine temperature, vehicle speed, transmission temperature, and gear selection. The ECM determines the lock-up status of the torque converter by comparing the engine rpm (NE) to the input turbine rpm (NT). The ECM calculates the actual transmission gear by comparing input turbine rpm (NT) to counter gear rpm (NC). When conditions are appropriate, the ECM requests "lock-up" by applying control voltage to the shift solenoid DSL. When the DSL is turned on, it applies pressure to the lock-up relay valve and locks the torque converter clutch.
If the ECM detects no lock-up after lock-up has been requested or if it detects lock-up when it is not requested, the ECM interprets this as a fault in the shift solenoid valve DSL or lock-up system performance. The ECM will turn on the MIL and store the DTC.
HINT:
Example:
When any of the following is met, the system judges it as a malfunction.

- There is a difference in rotation between the input side (engine speed) and output side (input turbine speed) of the torque converter when the ECM commands lock-up.
  (Engine speed is at least 75 rpm greater than input turbine speed.)
- There is no difference in rotation between the input side (engine speed) and output side (input turbine speed) of the torque converter when the ECM commands lock-up off.
  (The difference between engine speed and input turbine speed is less than 35 rpm.)

MONITOR STRATEGY

Related DTCs	P0741: Shift solenoid valve DSL/OFF malfunction Shift solenoid valve DSL/ON malfunction
Required sensors/Components	Shift solenoid valve DSL, Speed sensor (NT), Speed sensor (NC), Crankshaft position sensor (NE), Throttle position sensor (VPA1), Mass air flow sensor (MAF), Transmission temperature sensor (THO1), Engine coolant temperature sensor (ECT)
Frequency of operation	Continuous
Duration	OFF malfunction 3.5 sec. ON malfunction 1.8 sec.
MIL operation	2 driving cycles
Sequence of operation	None

cardiagn.com

TYPICAL ENABLING CONDITIONS

ALL:

The monitor will run whenever this DTC is not present.	P0115 - P0118 (ECT sensor) P0125 (Insufficient ECT for closed loop) P0500 (VSS) P0748, P0778, P0798 (Shift solenoid valve (range))
ECT (Engine coolant temperature)	10°C (50°F) or more
Transmission range	"D"
TFT (Transmission fluid temperature)	-20°C (-4°F) or more
TFT sensor circuit	Not circuit malfunction
ECT sensor circuit	Not circuit malfunction
Turbine speed sensor circuit	Not circuit malfunction
Intermediate shaft speed sensor circuit	Not circuit malfunction
Output speed sensor circuit	Not circuit malfunction
Shift solenoid valve SL1 circuit	Not circuit malfunction
Shift solenoid valve SL2 circuit	Not circuit malfunction
Shift solenoid valve SL3 circuit	Not circuit malfunction
Shift solenoid valve S4 circuit	Not circuit malfunction
Shift solenoid valve SR circuit	Not circuit malfunction
Shift solenoid valve DSL circuit	Not circuit malfunction
Electronic throttle system	Not circuit malfunction

OFF malfunction

ECM lock-up command	ON
ECM selected gear	3rd, 4th or 5th
Vehicle speed	25 km/h (15.5 mph) or more

ON malfunction

ECM lock-up command	OFF
ECM selected gear	3rd, 4th or 5th
Throttle valve opening angle	8.5% or more
Vehicle speed	25 to 60 km/h (15.5 to 37.3 mph)

TYPICAL MALFUNCTION THRESHOLDS

Either of the following conditions is met: OFF malfunction or ON malfunction OFF malfunction:

Engine Speed - Input (turbine) speed	100 rpm or more

ON malfunction:

Difference between engine speed and input (turbine) speed	Less than 35 rpm

INSPECTION PROCEDURE

HINT:

Performing the ACTIVE TEST using the intelligent tester allows the relay, VSV, actuator and so on to operate without parts removal. Performing the ACTIVE TEST as the first step of troubleshooting is one method to shorten labor time.

It is possible to display the DATA LIST during the ACTIVE TEST.

1. PERFORM ACTIVE TEST

(a) Warm up the engine.

(b) Turn the ignition switch off.

(c) Connect the intelligent tester together with the CAN VIM (controller area network vehicle interface module) to the DLC3.

cardiagn.com

(d) Turn the ignition switch on (IG).
(e) Turn on the tester.
(f) Select the item "DIAGNOSIS / OBD/MOBD / ECT / ACTIVE TEST".
(g) According to the display on the tester, perform the "ACTIVE TEST".

Item	Test Details	Diagnostic Note
LOCK UP	[Test Details] Control the shift solenoid DSL to set the automatic transaxle to the lock-up condition. [Vehicle Condition] Vehicle Speed: 60 km/h (37 mph) or more	Possible to check the DSL operation.

HINT:
- This test can be conducted when the vehicle speed is 60 km/h (37 mph) or more.
- This test can be conducted in the 5th gear.

(h) Lightly depress the accelerator pedal and check that the engine speed does not change abruptly.
HINT:
- When changing the accelerator pedal opening angle while driving, if the engine speed does not change, lock-up is on.
- Slowly release, but not fully, the accelerator pedal in order to decelerate. (Fully releasing the pedal will close the throttle valve and lock-up may be turned off.)

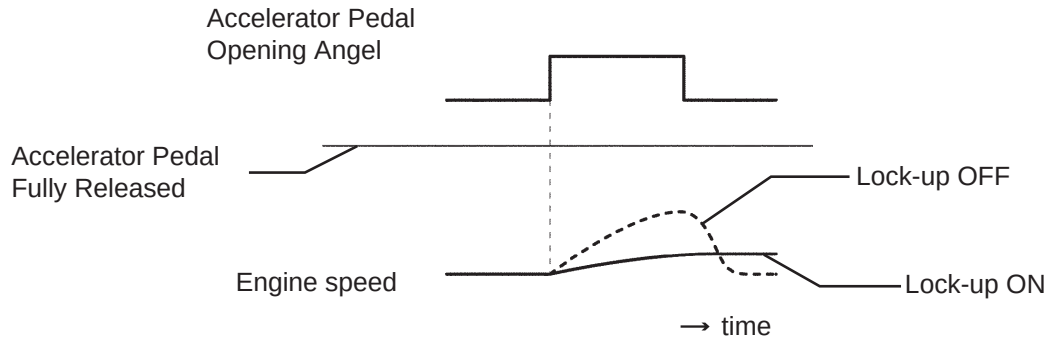

1 CHECK OTHER DTCS OUTPUT (IN ADDITION TO DTC P0741)

(a) Connect the OBD II scan tool or the intelligent tester together with the CAN VIM (controller area network vehicle interface module) to the DLC3.
(b) Turn the ignition switch on (IG) and turn the OBD II scan tool or the intelligent tester main switch ON.
(c) When you use intelligent tester:
Select the item "DIAGNOSIS / ENHANCED OBD II / DTC INFO / CURRENT CODES".
(d) Read the DTCs using the OBD II scan tool or the intelligent tester.

Result

Display (DTC output)	Proceed to
Only "P0741" is output	**A**
"P0741" and other DTCs	**B**

cardiagn.com

HINT:
If any other codes besides "P0741" are output, perform the troubleshooting for those DTCs first.

B → **GO TO DTC CHART**

A

2 INSPECT TRANSMISSION WIRE (DSL)

Transmission Wire Side:

(Connector Front View):

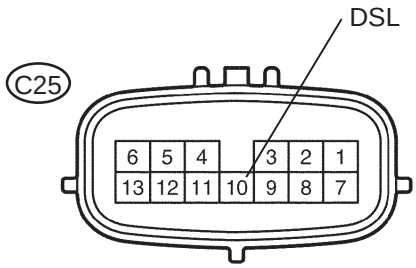

C113969E25

(a) Disconnect the transmission wire connector from the transaxle.
(b) Measure the resistance according to the value(s) in the table below.

Standard resistance

Tester Connection	Specified Condition 20°C (68°F)
10 - Body ground	11 to 13 Ω

NG → **Go to step 4**

OK

3 CHECK HARNESS AND CONNECTOR (TRANSMISSION WIRE - ECM)

Wire Harness Side:

(Connector Front View):

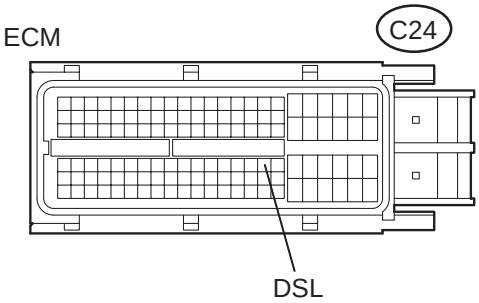

A136781E03

(a) Connect the transmission wire connector.
(b) Disconnect the ECM connector.
(c) Measure the resistance according to the value(s) in the table below.

Standard resistance

Tester Connection	Specified Condition 20°C (68°F)
C24-79 (DSL) - Body ground	11 to 13 Ω

NG → **REPAIR OR REPLACE HARNESS OR CONNECTOR**

OK

cardiagn.com

4 INSPECT SHIFT SOLENOID VALVE (DSL)

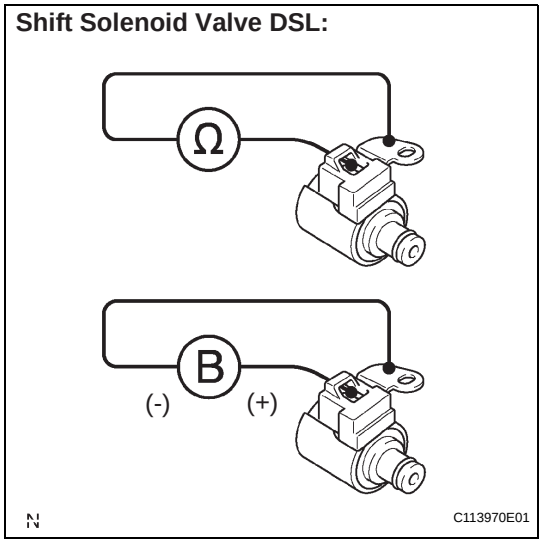

(a) Remove the shift solenoid valve DSL.
(b) Measure the resistance according to the value(s) in the table below.
Standard resistance

Tester Connection	Specified Condition 20°C (68°F)
Solenoid Connector (DSL) - Solenoid Body (DSL)	11 to 13 Ω

(c) Connect the positive (+) lead to the terminal of the solenoid connector, and the negative (-) lead to the solenoid body.
OK:
The solenoid valve makes an operating sound.

NG → **REPLACE SHIFT SOLENOID VALVE (DSL)**

OK

5 CHECK TRANSMISSION WIRE

OK:
The connectors and pins are securely installed.
There is no open or short on the wire harness.

NG → **REPAIR OR REPLACE TRANSMISSION WIRE**

OK

6 INSPECT TRANSMISSION VALVE BODY ASSEMBLY

OK:
There are no foreign objects on each valve.

NG → **REPAIR OR REPLACE TRANSMISSION VALVE BODY ASSEMBLY**

OK

7 INSPECT TORQUE CONVERTER CLUTCH ASSEMBLY

OK:
The torque converter clutch operates normally.

NG → **REPLACE TORQUE CONVERTER CLUTCH ASSEMBLY**

cardiagn.com

OK

REPAIR AUTOMATIC TRANSAXLE ASSEMBLY

cardiagn.com

DTC	P0746	Pressure Control Solenoid "A" Performance (Shift Solenoid Valve SL1)

SYSTEM DESCRIPTION

The ECM uses signals from the vehicle speed sensor to detect the actual gear position (1st, 2nd, 3rd, 4th or 5th gear).
Then the ECM compares the actual gear with the shift schedule in the ECM memory to detect mechanical problems of the shift solenoid valves, valve body or automatic transaxle (clutch, brake or gear etc.).

DTC No.	DTC Detecting Condition	Trouble Area
P0746	The gear required by the ECM does not match the actual gear when driving (2-trip detection logic)	• Shift solenoid valve SL1 remains open or closed • Valve body is blocked • Automatic transaxle (clutch, brake or gear etc.)

MONITOR DESCRIPTION

The ECM commands gear shifts by turning the shift solenoid valves "ON/OFF". According to the input shaft revolution, intermediate (counter) shaft revolution and output shaft revolution, the ECM detects the actual gear position (1st, 2nd, 3rd, 4th or 5th gear position). When the gear position commanded by the ECM and the actual gear position are not the same, the ECM illuminates the MIL.
HINT:
Example:
When either condition (a) or (b) is met, the ECM detects a malfunction.
(a) The ECM commands the 1st gear, but the actual gear is 2nd.
(b) The ECM commands the 2nd gear, but the actual gear is 1st.

MONITOR STRATEGY

Related DTCs	P0746: Shift solenoid valve SL1/OFF malfunction Shift solenoid valve SL1/ON malfunction
Required sensors/Components	Shift solenoid valve SL1, Speed sensor (NT), Speed sensor (NC), Crankshaft position sensor (NE)
Frequency of operation	Continuous
Duration	0.8 sec.
MIL operation	2 driving cycles
Sequence of operation	None

TYPICAL ENABLING CONDITIONS

ALL:

The monitor will run whenever this DTC is not present.	P0115 - P0118 (ECT sensor) P0125 (Insufficient ECT for closed loop) P0500 (VSS) P0748, P0778, P0798 (Shift solenoid valve (range))
ECT (Engine coolant temperature)	10°C (50°F) or more
Transmission range	"D"
TFT (Transmission fluid temperature)	-20°C (-4°F) or more
TFT sensor circuit	Not circuit malfunction
ECT sensor circuit	Not circuit malfunction
Turbine speed sensor circuit	Not circuit malfunction
Intermediate shaft speed sensor circuit	Not circuit malfunction
Output speed sensor circuit	Not circuit malfunction
Shift solenoid valve SL1 circuit	Not circuit malfunction
Shift solenoid valve SL2 circuit	Not circuit malfunction

cardiagn.com

Shift solenoid valve SL3 circuit	Not circuit malfunction
Shift solenoid valve S4 circuit	Not circuit malfunction
Shift solenoid valve SR circuit	Not circuit malfunction
Shift solenoid valve DSL circuit	Not circuit malfunction
Electronic throttle system	Not circuit malfunction

OFF malfunction:

ECM selected gear	1st
Vehicle speed	Less than 40 km/h (24.9 mph)
Throttle valve opening angle	4.5% or more at engine speed 1,900 rpm (Varies with engine speed)

ON malfunction:

ECM selected gear	2nd
Throttle valve opening angle	4.5% or more at engine speed 1,900 rpm (Varies with engine speed)

TYPICAL MALFUNCTION THRESHOLDS

Either of the following conditions is met: OFF malfunction or ON malfunction

OFF malfunction:

2 detections are necessary per driving cycle:
1st detection; temporary flag ON
2nd detection; pending fault code ON

Input (turbine) speed/Intermediate shaft speed	1.49 to 1.63

ON malfunction:

Input (turbine) speed/Intermediate shaft speed	2.72 to 2.86

INSPECTION PROCEDURE

HINT:
Performing the ACTIVE TEST using the intelligent tester allows the relay, VSV, actuator and so on to operate without parts removal. Performing the ACTIVE TEST as the first step of troubleshooting is one method to shorten labor time.
It is possible to display the DATA LIST during the ACTIVE TEST.

1. PERFORM ACTIVE TEST

(a) Warm up the engine.
(b) Turn the ignition switch off.
(c) Connect the OBD II scan tool or intelligent tester together with the CAN VIM (controller area network vehicle interface module) to the DLC3.
(d) Turn the ignition switch on (IG).
(e) Turn on the tester.
(f) Select the item "DIAGNOSIS / OBD/MOBD / ECT / ACTIVE TEST / SHIFT".
(g) According to the display on the tester, perform the "ACTIVE TEST".

HINT:
While driving, the shift position can be forcibly changed with the intelligent tester.

cardiagn.com

Comparing the shift position commanded by the ACTIVE TEST with the actual shift position enables you to confirm the problem (See page AX-30).

Item	Test Details	Diagnostic Note
SHIFT	[Test Details] Operate the shift solenoid valve and set each shift position by yourself. [Vehicle Condition] Less than 50 km/h (31 mph) [Others] • Press "←" button: Shift up • Press "→" button: Shift down	Possible to check the operation of the shift solenoid valves.

HINT:
- This test can be conducted when the vehicle speed is 50 km/h (31 mph) or less.
- The shift position commanded by the ECM is shown in the DATA LIST/SHIFT display on the intelligent tester.

1 CHECK OTHER DTCS OUTPUT (IN ADDITION TO DTC P0746)

(a) Connect the OBD II scan tool or intelligent tester together with the CAN VIM (controller area network vehicle interface module) to the DLC3.
(b) Turn the ignition switch on (IG) and turn the OBD II scan tool or the intelligent tester main switch ON.
(c) When you use intelligent tester:
Select the item "DIAGNOSIS / ENHANCED OBD II / DTC INFO / CURRENT CODES".
(d) Read the DTCs using the OBD II scan tool or the intelligent tester.

Result

Display (DTC output)	Proceed to
Only "P0746" is output	**A**
"P0746" and other DTCs	**B**

HINT:
If any other codes besides "P0746" are output, perform the troubleshooting for those DTCs first.

B → **GO TO DTC CHART**

A

cardiagn.com

2 INSPECT SHIFT SOLENOID VALVE (SL1)

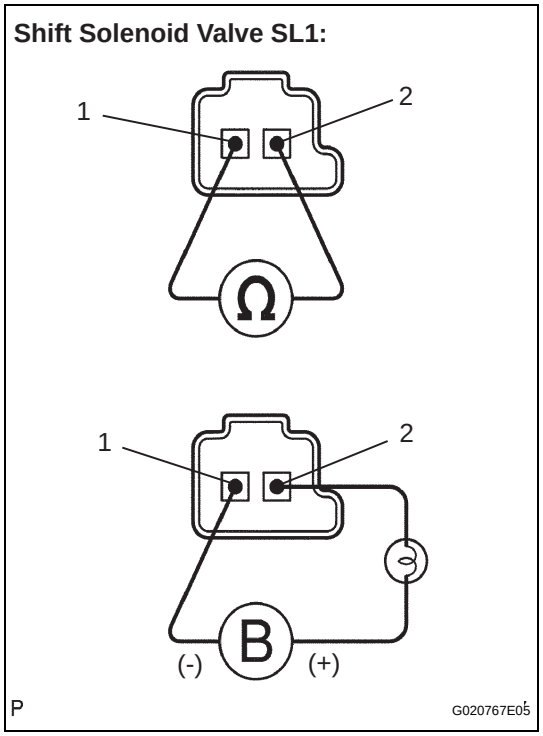

(a) Remove the shift solenoid valve SL1.

(b) Measure the resistance according to the value(s) in the table below.

Resistance

Tester Connection	Specified Condition 20°C (68°F)
1 - 2	5.0 to 5.6 Ω

(c) Connect the positive (+) lead with a 21 W bulb to terminal 2 and the negative (-) lead to terminal 1 of the solenoid valve connector, then check the movement of the valve.

OK:

The solenoid makes an operating sound.

NG → **REPLACE SHIFT SOLENOID VALVE (SL1)**

OK

3 INSPECT TRANSMISSION VALVE BODY ASSEMBLY

OK:

There are no foreign objects on each valve.

NG → **REPAIR OR REPLACE TRANSMISSION VALVE BODY ASSEMBLY**

OK

4 INSPECT TORQUE CONVERTER CLUTCH ASSEMBLY

OK:

The torque converter clutch operates normally.

NG → **REPLACE TORQUE CONVERTER CLUTCH ASSEMBLY**

OK

REPAIR OR REPLACE AUTOMATIC TRANSAXLE ASSEMBLY

cardiagn.com

DTC	P0748	Pressure Control Solenoid "A" Electrical (Shift Solenoid Valve SL1)

DESCRIPTION

Shifting from 1st to 5th is performed in combination with "ON" and "OFF" operation of the shift solenoid valves SL1, SL2, SL3, S4 and SR which are controlled by the ECM. If an open or short circuit occurs in either of the shift solenoid valves, the ECM controls the remaining normal shift solenoid valves to allow the vehicle to be operated smoothly (Fail safe function).

DTC No.	DTC Detection Condition	Trouble Area
P0748	The ECM checks for an open or short in the shift solenoid valve SL1 circuit while driving and shift gears. (1-trip detection logic) • Output signal duty equals to 100 %. (NOTE: SL1 output signal duty is less than 100 % under normal condition.)	• Open or short in shift solenoid valve SL1 circuit • Shift solenoid valve SL1 • ECM

MONITOR DESCRIPTION

The ECM commands gear shifts by turning the shift solenoid valves "ON/OFF". When there is an open or short circuit in any shift solenoid valve circuit, the ECM detects the problem and illuminates the MIL and stores the DTC. And the ECM performs the fail-safe function and turns the other normal shift solenoid valves "ON/OFF" (In case of an open or short circuit, the ECM stops sending current to the circuit.) (See page AX-30).

MONITOR STRATEGY

Related DTCs	P0748: Shift solenoid valve SL1/Range check
Required sensors/Components	Shift solenoid valve SL1
Frequency of operation	Continuous
Duration	1 sec.
MIL operation	Immediate
Sequence of operation	None

TYPICAL ENABLING CONDITIONS

The monitor will run whenever this DTC is not present.	None
Battery voltage	11 V or more
Ignition switch	ON
Starter	OFF

TYPICAL MALFUNCTION THRESHOLDS

Solenoid status from MIC	Fail (Open or Short)

COMPONENT OPERATING RANGE

Output signal duty	Less than 100%

cardiagn.com

WIRING DIAGRAM

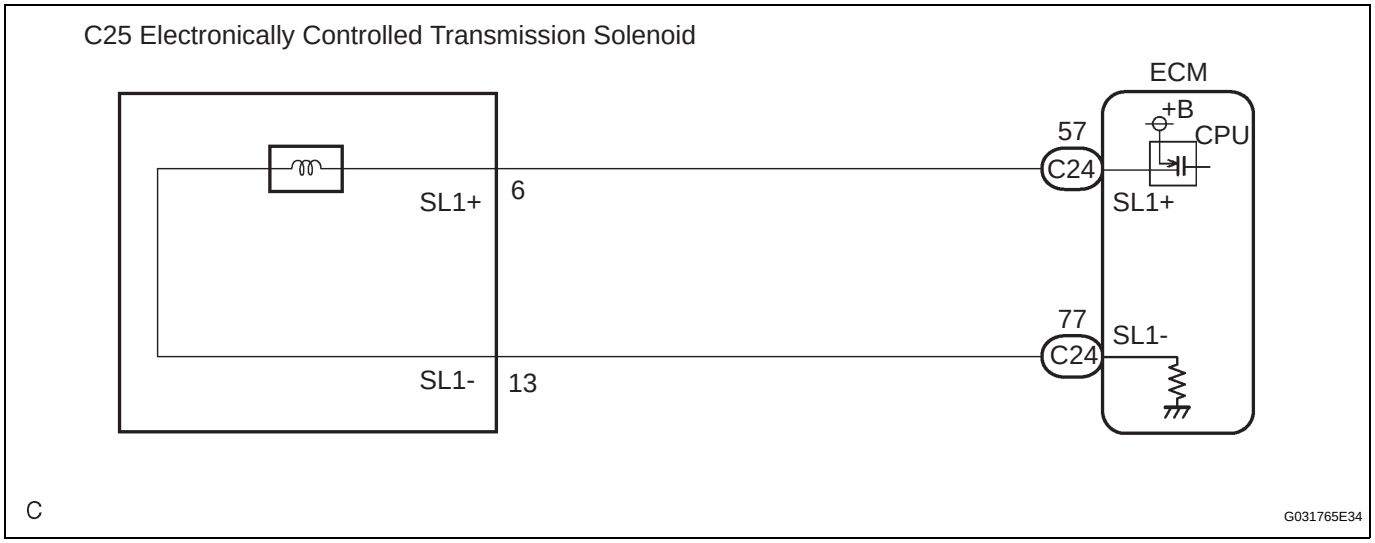

INSPECTION PROCEDURE

1	INSPECT TRANSMISSION WIRE (SL1)

Transmission Wire Side:

(Connector Front View):

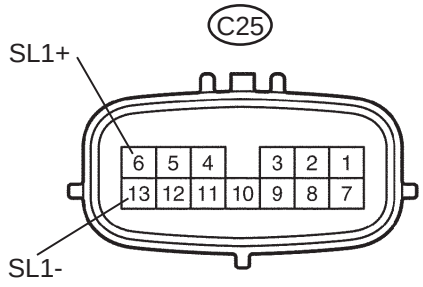

(a) Disconnect the transmission wire connector from the transaxle.

(b) Measure the resistance according to the value(s) in the table below.

Standard resistance

Tester Connection	Specified Condition 20°C (68°F)
6 (SL1+) - 13 (SL1-)	5.0 to 5.6 Ω

(c) Measure the resistance according to the value(s) in the table below.

Standard resistance (Check for short)

Tester Connection	Specified Condition
SL1+ - Body ground	10 kΩ or higher
SL1- - Body ground	10 kΩ or higher

NG → **Go to step 3**

OK

cardiagn.com

2 CHECK HARNESS AND CONNECTOR (TRANSMISSION WIRE - ECM)

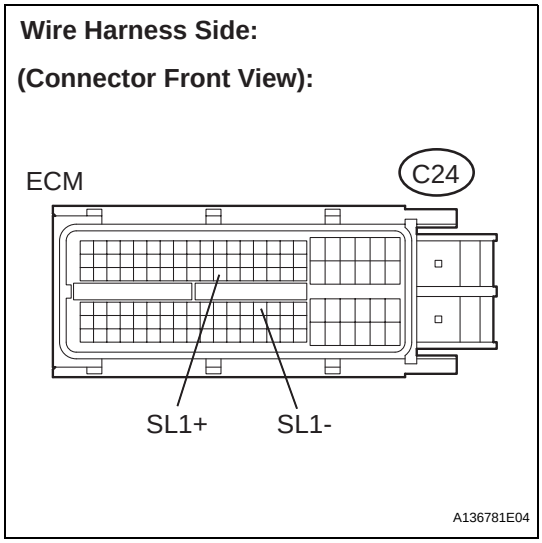

(a) Connect the transmission connector to the transaxle.
(b) Disconnect the connector from the ECM.
(c) Measure the resistance according to the value(s) in the table below.

Standard resistance

Tester Connection	Specified Condition 20°C (68°F)
C24-57 (SL1+) - C24-77 (SL1-)	5.0 to 5.6 Ω

(d) Measure the resistance according to the value(s) in the table below.

Standard resistance (Check for short)

Tester Connection	Specified Condition
C24-57 (SL1+) - Body ground	10 kΩ or higher
C24-77 (SL1-) - Body ground	

NG → **REPAIR OR REPLACE HARNESS OR CONNECTOR**

OK

REPLACE ECM

3 INSPECT SHIFT SOLENOID VALVE (SL1)

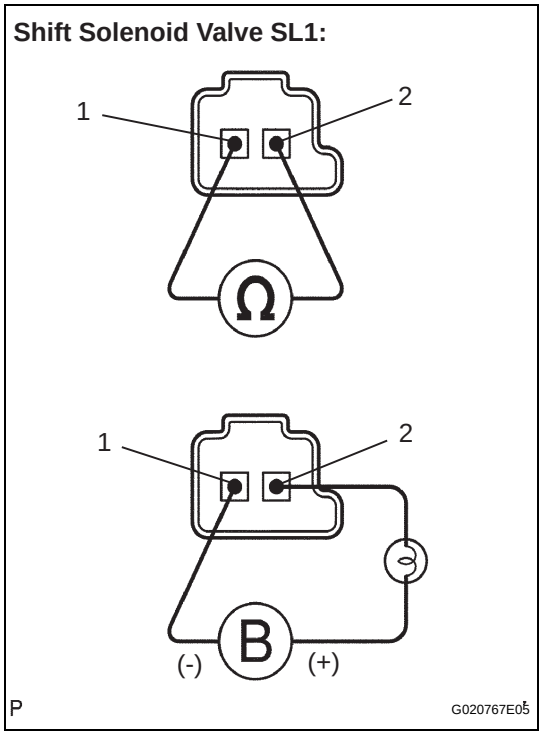

(a) Remove the shift solenoid valve SL1.
(b) Measure the resistance according to the value(s) in the table below.

Standard resistance

Tester Connection	Specified Condition 20°C (68°F)
1 - 2	5.0 to 5.6 Ω

(c) Connect the positive (+) lead with a 21 W bulb to terminal 2 and the negative (-) lead to terminal 1 of the solenoid valve connector, then check the movement of the valve.

OK:

The solenoid makes an operating sound.

NG → **REPLACE SHIFT SOLENOID VALVE (SL1)**

cardiagn.com

OK

REPAIR OR REPLACE TRANSMISSION WIRE

cardiagn.com

DTC	P0766	Shift Solenoid "D" Performance (Shift Solenoid Valve S4)

SYSTEM DESCRIPTION

The ECM uses signals from the vehicle speed sensor to detect the actual gear position (1st, 2nd, 3rd, 4th or 5th gear).
Then the ECM compares the actual gear with the shift schedule in the ECM memory to detect mechanical problems of the shift solenoid valves, valve body or automatic transaxle (clutch, brake or gear etc.).

DTC No.	DTC Detecting Condition	Trouble Area
P0766	The gear required by the ECM does not match the actual gear when driving (2-trip detection logic)	• Shift solenoid valve S4 remains open or closed • Valve body is blocked • Automatic transaxle (clutch, brake or gear etc.)

MONITOR DESCRIPTION

The ECM commands gear shifts by turning the shift solenoid valves "ON/OFF". According to the input shaft revolution, intermediate (counter) shaft revolution and output shaft revolution, the ECM detects the actual gear position (1st, 2nd, 3rd, 4th or 5th gear position). When the gear position commanded by the ECM and the actual gear position are not the same, the ECM illuminates the MIL and stores the DTC.

MONITOR STRATEGY

Related DTCs	P0766: Shift solenoid valve S4/OFF malfunction Shift solenoid valve S4/ON malfunction
Required sensors/Components	Shift solenoid valve S4, Speed sensor (NT), Speed sensor (NC), Crankshaft position sensor (NE)
Frequency of operation	Continuous
Duration	OFF malfunction (A) and ON malfunction (B) 1 sec. OFF malfunction (B) 1.2 sec. ON malfunction (A) 0.8 sec.
MIL operation	2 driving cycles
Sequence of operation	None

TYPICAL ENABLING CONDITIONS

All:

The monitor will run whenever this DTC is not present.	P0115 - P0118 (ECT sensor) P0125 (Insufficient ECT for closed loop) P0500 (VSS) P0748, P0778, P0798 (Shift solenoid valve (range))
ECT (Engine coolant temperature)	10°C (50°F) or more
Transmission range	"D"
TFT (Transmission fluid temperature)	-20°C (-4°F) or more
TFT sensor circuit	Not circuit malfunction
ECT sensor circuit	Not circuit malfunction
Turbine speed sensor circuit	Not circuit malfunction
Intermediate shaft speed sensor circuit	Not circuit malfunction
Output speed sensor circuit	Not circuit malfunction
Shift solenoid valve SL1 circuit	Not circuit malfunction
Shift solenoid valve SL2 circuit	Not circuit malfunction
Shift solenoid valve SL3 circuit	Not circuit malfunction

cardiagn.com

Shift solenoid valve S4 circuit	Not circuit malfunction
Shift solenoid valve SR circuit	Not circuit malfunction
Shift solenoid valve DSL circuit	Not circuit malfunction
Electronic throttle system	Not circuit malfunction

OFF malfunction (A):

ECM selected gear	5th
Throttle valve opening angle	5% or more
Vehicle speed	10 km/h (6.2 mph) or more

OFF malfunction (B):

ECM lock-up command	ON
ECM selected gear	3rd, 4th or 5th
Throttle valve opening angle	10% or more
Vehicle speed	25 to 100 km/h (15.5 to 62.1 mph)

ON malfunction (A):

ECM selected gear	4th or 5th
Throttle valve opening angle	4.5% or more at engine speed 1,900 rpm (Varies with engine speed)

ON malfunction (B):

ECM selected gear	4th
Throttle valve opening angle	5% or more
Vehicle speed	10 km/h (6.2 mph) or more

TYPICAL MALFUNCTION THRESHOLDS

Either of the following conditions is met: OFF malfunction (A) and (B), or ON malfunction (A) and (B)

2 detections are necessary per driving cycle:
1st detection; temporary flag ON
2nd detection; pending fault code ON

OFF malfunction (A):

Intermediate shaft speed/Output speed	1.34 to 1.48

OFF malfunction (B):

Difference between engine speed and input (turbine) speed	Less than 35 rpm

ON malfunction (A):

Input (turbine) speed/Intermediate shaft speed	0.64 to 0.74

ON malfunction (B):

Intermediate shaft speed/Output speed	0.95 to 1.09

INSPECTION PROCEDURE

HINT:
Performing the ACTIVE TEST using the intelligent tester allows the relay, VSV, actuator and so on to operate without parts removal. Performing the ACTIVE TEST as the first step of troubleshooting is one method to shorten labor time.
It is possible to display the DATA LIST during the ACTIVE TEST.

1. PERFORM ACTIVE TEST

(a) Warm up the engine.
(b) Turn the ignition switch off.

cardiagn.com

(c) Connect the OBD II scan tool or intelligent tester together with the CAN VIM (controller area network vehicle interface module) to the DLC3.
(d) Turn the ignition switch on (IG).
(e) Turn on the tester.
(f) Select the item "DIAGNOSIS / OBD/MOBD / ECT / ACTIVE TEST / SHIFT".
(g) According to the display on the tester, perform the "ACTIVE TEST".

HINT:
While driving, the shift position can be forcibly changed with the intelligent tester.
Comparing the shift position commanded by the ACTIVE TEST with the actual shift position enables you to confirm the problem (See page AX-30).

Item	Test Details	Diagnostic Note
SHIFT	[Test Details] Operate the shift solenoid valve and set each shift position by yourself. [Vehicle Condition] Less than 50 km/h (31 mph) [Others] • Press "→" button: Shift up • Press "←" button: Shift down	Possible to check the operation of the shift solenoid valves.

HINT:
- This test can be conducted when the vehicle speed is 50 km/h (31 mph) or less.
- The shift position commanded by the ECM is shown in the DATA LIST/SHIFT display on the intelligent tester.

1 CHECK OTHER DTCS OUTPUT (IN ADDITION TO DTC P0766)

(a) Connect the OBD II scan tool or intelligent tester together with the CAN VIM (controller area network vehicle interface module) to the DLC3.
(b) Turn the ignition switch on (IG) and turn the OBD II scan tool or the intelligent tester main switch ON.
(c) Select the item "DIAGNOSIS / ENHANCED OBD II / DTC INFO / CURRENT CODES".
(d) Read the DTCs using the OBD II scan tool or the intelligent tester.

Result

Display (DTC output)	Proceed to
Only "P0766" is output	A
"P0766" and other DTCs	B

HINT:
If any other codes besides "P0766" are output, perform the troubleshooting for those DTCs first.

B → GO TO DTC CHART

A

cardiagn.com

2 INSPECT SHIFT SOLENOID VALVE S4

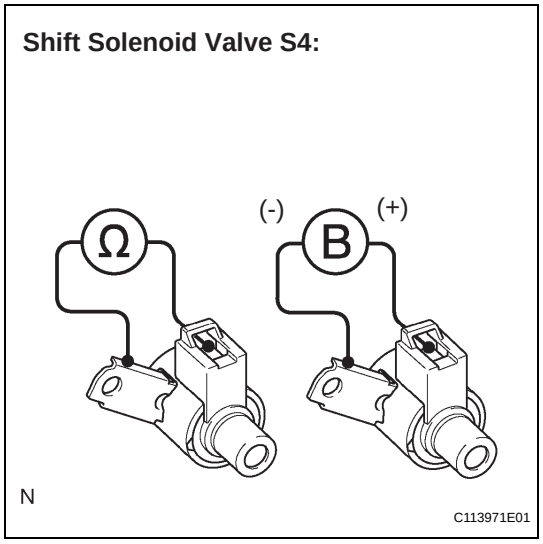

(a) Remove the shift solenoid valve S4.

(b) Measure the resistance according to the value(s) in the table below.

Standard resistance

Tester Connection	Specified Condition 20°C (68°F)
Solenoid Connector (S4) - Solenoid Body (S4)	11 to 15 Ω

(c) Connect the positive (+) lead to the terminal of the solenoid connector, and the negative (-) lead to the solenoid body.

OK:

The solenoid makes an operating sound.

NG → **REPLACE SHIFT SOLENOID VALVE (S4)**

OK

3 INSPECT TRANSMISSION VALVE BODY ASSEMBLY

OK:

There are no foreign objects on each valve.

NG → **REPAIR OR REPLACE TRANSMISSION VALVE BODY ASSEMBLY**

OK

4 INSPECT TORQUE CONVERTER CLUTCH ASSEMBLY

OK:

The torque converter clutch operates normally.

NG → **REPLACE TORQUE CONVERTER CLUTCH ASSEMBLY**

OK

REPAIR OR REPLACE AUTOMATIC TRANSAXLE ASSEMBLY

cardiagn.com

DTC	P0771	Shift Solenoid "E" Performance (Shift Solenoid Valve SR)

SYSTEM DESCRIPTION

The ECM uses signals from the vehicle speed sensor to detect the actual gear position (1st, 2nd, 3rd, 4th or 5th gear).
Then the ECM compares the actual gear with the shift schedule in the ECM memory to detect mechanical problems of the shift solenoid valves, valve body or automatic transaxle (clutch, brake or gear etc.).

DTC No.	DTC Detecting Condition	Trouble Area
P0771	The gear required by the ECM does not match the actual gear when driving (2-trip detection logic)	• Shift solenoid valve SR remains open or closed • Valve body is blocked • Automatic transaxle (clutch, brake or gear etc.)

MONITOR DESCRIPTION

The ECM commands gear shifts by turning the shift solenoid valves "ON/OFF". According to the input shaft revolution, intermediate (counter) shaft revolution and output shaft revolution, the ECM detects the actual gear position (1st, 2nd, 3rd, 4th or 5th gear position). When the gear position commanded by the ECM and the actual gear position are not the same, the ECM illuminates the MIL and stores the DTC.

MONITOR STRATEGY

Related DTCs	P0771: Shift solenoid valve SR/Rationality check
Required sensors/Components	Shift solenoid valve SR, Speed sensor (NT), Speed sensor (NC), Crankshaft position sensor (NE)
Frequency of operation	Continuous
Duration	OFF malfunction (A) 1 sec. OFF malfunction (B) 3.5 sec. ON malfunction (A) Continuous ON malfunction (B) and (C) 0.8 sec.
MIL operation	2 driving cycles
Sequence of operation	None

TYPICAL ENABLING CONDITIONS

All:

The monitor will run whenever this DTC is not present	P0115 - P0118 (ECT sensor) P0125 (Insufficient ECT for closed loop) P0500 (VSS) P0748, P0778, P0798 (Shift solenoid valve (range))
ECT (Engine coolant temperature)	10°C (50°F) or more
Transmission range	"D"
TFT (Transmission fluid temperature)	-20°C (-4°F) or more
TFT sensor circuit	Not circuit malfunction
ECT sensor circuit	Not circuit malfunction
Turbine speed sensor circuit	Not circuit malfunction
Intermediate shaft speed sensor circuit	Not circuit malfunction
Output speed sensor circuit	Not circuit malfunction
Shift solenoid valve SL1 circuit	Not circuit malfunction
Shift solenoid valve SL2 circuit	Not circuit malfunction

cardiagn.com

Shift solenoid valve SL3 circuit	Not circuit malfunction
Shift solenoid valve S4 circuit	Not circuit malfunction
Shift solenoid valve SR circuit	Not circuit malfunction
Shift solenoid valve DSL circuit	Not circuit malfunction
Electronic throttle system	Not circuit malfunction

OFF malfunction (A):

ECM selected gear	5th
Throttle valve opening angle	5% or more
Vehicle speed	10 km/h (6.2 mph) or more

OFF malfunction (B):

ECM lock-up command	ON
ECM selected gear	3rd, 4th or 5th
Vehicle speed	25 km/h (15.5 mph) or more

ON malfunction (A):

ECM lock-up command	OFF

ON malfunction (B):

ECM selected gear	1st
Vehicle speed	Less than 40 km/h (24.9 mph)
Throttle valve opening angle	4.5% or more at engine speed 1,900 rpm (Varies with engine speed)

ON malfunction (C):

ECM selected gear	3rd
Throttle valve opening angle	4.5% or more at engine speed 1,900 rpm (Varies with engine speed)

ON malfunction (D):

Duration time from shift command of ECM	15 sec. or more
ECM selected gear	4th or 5th

TYPICAL MALFUNCTION THRESHOLDS

Either of the following conditions is met: OFF malfunction (A) and (B), or ON malfunction (A), (B), (C) and (D)

OFF malfunction (A):

Intermediate shaft speed/Output speed	1.34 to 1.48

OFF malfunction (B):

Engine speed - Input (turbine) speed	75 rpm or more

ON malfunction (A):

Difference between engine speed and input (turbine) speed	150 rpm or more

ON malfunction (B):

Input (turbine) speed/Intermediate shaft speed	0.93 to 1.07

ON malfunction (C):

Input (turbine) speed/Intermediate shaft speed	0.93 to 1.07

ON malfunction (D):

Input (turbine) speed/Intermediate shaft speed	0.64 to 0.74

cardiagn.com

INSPECTION PROCEDURE

HINT:
Performing the ACTIVE TEST using the intelligent tester allows the relay, VSV, actuator and so on to operate without parts removal. Performing the ACTIVE TEST as the first step of troubleshooting is one method to shorten labor time.
It is possible to display the DATA LIST during the ACTIVE TEST.

1. PERFORM ACTIVE TEST

(a) Warm up the engine.
(b) Turn the ignition switch off.
(c) Connect the OBD II scan tool or intelligent tester together with the CAN VIM (controller area network vehicle interface module) to the DLC3.
(d) Turn the ignition switch on (IG).
(e) Turn on the tester.
(f) Select the item "DIAGNOSIS / OBD/MOBD / ECT / ACTIVE TEST / SHIFT".
(g) According to the display on the tester, perform the "ACTIVE TEST".

HINT:
While driving, the shift position can be forcibly changed with the intelligent tester.
Comparing the shift position commanded by the ACTIVE TEST with the actual shift position enables you to confirm the problem (See page AX-30).

Item	Test Details	Diagnostic Note
SHIFT	[Test Details] Operate the shift solenoid valve and set each shift position by yourself. [Vehicle Condition] Less than 50 km/h (31 mph) [Others] • Press "→" button: Shift up • Press "←" button: Shift down	Possible to check the operation of the shift solenoid valves.

HINT:
- This test can be conducted when the vehicle speed is 50 km/h (31 mph) or less.
- The shift position commanded by the ECM is shown in the DATA LIST/SHIFT display on the intelligent tester.

1	CHECK OTHER DTCS OUTPUT (IN ADDITION TO DTC P0771)

(a) Connect the OBD II scan tool or intelligent tester together with the CAN VIM (controller area network vehicle interface module) to the DLC3.
(b) Turn the ignition switch on (IG) and turn the OBD II scan tool or the intelligent tester main switch ON.
(c) When you use intelligent tester:
Select the item "DIAGNOSIS / ENHANCED OBD II / DTC INFO / CURRENT CODES".
(d) Read the DTCs using the OBD II scan tool or the intelligent tester.

Result

Display (DTC output)	Proceed to
Only "P0771" is output	A
"P0771" and other DTCs	B

HINT:
If any other codes besides "P0771" are output, perform the troubleshooting for those DTCs first.

cardiagn.com

B → **GO TO DTC CHART**

A

2 INSPECT SHIFT SOLENOID VALVE (SR)

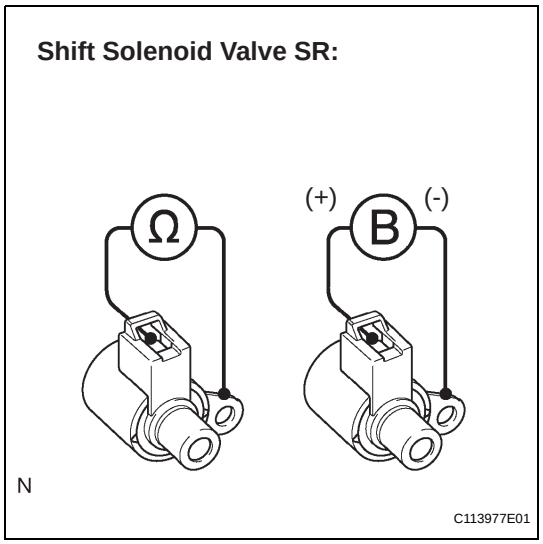

(a) Remove the shift solenoid valve SR.
(b) Measure the resistance according to the value(s) in the table below.
Standard resistance

Tester Connection	Specified Condition 20°C (68°F)
Solenoid Connector (SR) - Solenoid Body (SR)	11 to 15 Ω

(c) Connect positive (+) lead to the terminal of solenoid connector, negative (-) lead to the solenoid body.
OK:
The solenoid makes an operating sound.

NG → **REPLACE SHIFT SOLENOID VALVE (SR)**

OK

3 INSPECT TRANSMISSION VALVE BODY ASSEMBLY

OK:
There are no foreign objects on each valve.

NG → **REPAIR OR REPLACE TRANSMISSION VALVE BODY ASSEMBLY**

OK

4 INSPECT TORQUE CONVERTER CLUTCH ASSEMBLY

OK:
The torque converter clutch operates normally.

NG → **REPLACE TORQUE CONVERTER CLUTCH ASSEMBLY**

OK

REPAIR OR REPLACE AUTOMATIC TRANSAXLE ASSEMBLY

cardiagn.com

DTC	P0776	Pressure Control Solenoid "B" Performance (Shift Solenoid Valve SL2)

SYSTEM DESCRIPTION

The ECM uses signals from the vehicle speed sensor to detect the actual gear position (1st, 2nd, 3rd, 4th or 5th gear).
Then the ECM compares the actual gear with the shift schedule in the ECM memory to detect mechanical problems of the shift solenoid valves, valve body or automatic transaxle (clutch, brake or gear etc.).

DTC No.	DTC Detecting Condition	Trouble Area
P0776	The gear required by the ECM does not match the actual gear when driving (2-trip detection logic)	• Shift solenoid valve SL2 remains open or closed • Valve body is blocked • Automatic transaxle (clutch, brake or gear etc.)

MONITOR DESCRIPTION

The ECM commands gear shifts by turning the shift solenoid valves "ON/OFF". According to the input shaft revolution, intermediate (counter) shaft revolution and output shaft revolution, the ECM detects the actual gear position (1st, 2nd, 3rd, 4th or 5th gear position). When the gear position commanded by the ECM and the actual gear position are not the same, the ECM illuminates the MIL and stores the DTC.

MONITOR STRATEGY

Related DTCs	P0776: Shift solenoid valve SL2/OFF malfunction Shift solenoid valve SL2/ON malfunction
Required sensors/Components	Shift solenoid valve SL2, Speed sensor (NT), Speed sensor (NC), Crankshaft position sensor (NE)
Frequency of operation	Continuous
Duration	OFF malfunction (A) 1.8 sec. OFF malfunction (B) and (C) 0.8 sec. ON malfunction (A) and (B) 0.8 sec. ON malfunction (C) 0.4 sec.
MIL operation	2 driving cycles
Sequence of operation	None

TYPICAL ENABLING CONDITIONS

All:

The monitor will run whenever this DTC is not present.	P0115 - P0118 (ECT sensor) P0125 (Insufficient ECT for closed loop) P0500 (VSS) P0748, P0778, P0798 (Shift solenoid valve (range))
ECT (Engine coolant temperature)	10°C (50°F) or more
Transmission range	"D"
TFT (Transmission fluid temperature)	-20°C (-4°F) or more
TFT sensor circuit	Not circuit malfunction
ECT sensor circuit	Not circuit malfunction
Turbine speed sensor circuit	Not circuit malfunction
Intermediate shaft speed sensor circuit	Not circuit malfunction
Output speed sensor circuit	Not circuit malfunction
Shift solenoid valve SL1 circuit	Not circuit malfunction
Shift solenoid valve SL2 circuit	Not circuit malfunction

cardiagn.com

Shift solenoid valve SL3 circuit	Not circuit malfunction
Shift solenoid valve S4 circuit	Not circuit malfunction
Shift solenoid valve SR circuit	Not circuit malfunction
Shift solenoid valve DSL circuit	Not circuit malfunction
Electronic throttle system	Not circuit malfunction

OFF malfunction (A):

ECM lock-up command	OFF
Vehicle speed	Less than 60 km/h (37.3 mph)
Throttle valve opening angle	8.5% or more

OFF malfunction (B):

ECM selected gear	1st
Vehicle speed	Less than 40 km/h (24.9 mph)
Throttle valve opening angle	4.5% or more at engine speed 1,900 rpm (Varies with engine speed)

OFF malfunction (C):

ECM selected gear	3rd
Throttle valve opening angle	4.5% or more at engine speed 1,900 rpm (Varies with engine speed)

OFF malfunction (D):

Duration time from shift command of ECM	15 sec. or more
ECM selected gear	4th or 5th

ON malfunction (A):

ECM selected gear	1st
Vehicle speed	Less than 40 km/h (24.9 mph)
Throttle valve opening angle	4.5% or more at engine speed 1,900 rpm (Varies with engine speed)

ON malfunction (B):

ECM selected gear	3rd
Throttle valve opening angle	7.0% or more at output speed 1,400 rpm (Varies with engine speed)
Malfunction of pressure control solenoid "B" (SL2) and "C" (SL3)	Not detected

ON malfunction (C):

Throttle valve opening angle	7.0% or more at output speed 1,050 rpm (Varies with engine speed)
Malfunction of pressure control solenoid "B" (SL2)	Not detected

TYPICAL MALFUNCTION THRESHOLDS

Either of the following conditions is met: OFF malfunction (A), (B), (C) and (D), or ON malfunction (A), (B) and (C)

OFF malfunction (A):

Difference between engine speed and input (turbine) speed	Less than 35 rpm

OFF malfunction (B) and (C):

Input (turbine) speed/Intermediate shaft speed	0.93 to 1.07

OFF malfunction (D):

Input (turbine) speed/Intermediate shaft speed	0.64 to 0.74

cardiagn.com

ON malfunction (A):

Input (turbine) speed/Intermediate shaft speed	2.72 to 2.86

ON malfunction (B):

Input (turbine) speed - Intermediate shaft speed	700 rpm or more

ON malfunction (C):

Input (turbine) speed - Intermediate shaft speed	Less than -500 rpm or 700 rpm or more

INSPECTION PROCEDURE

HINT:
Performing the ACTIVE TEST using the intelligent tester allows the relay, VSV, actuator and so on to operate without parts removal. Performing the ACTIVE TEST as the first step of troubleshooting is one method to shorten labor time.
It is possible to display the DATA LIST during the ACTIVE TEST.

1. PERFORM ACTIVE TEST

(a) Warm up the engine.
(b) Turn the ignition switch off.
(c) Connect the OBD II scan tool or intelligent tester together with the CAN VIM (controller area network vehicle interface module) to the DLC3.
(d) Turn the ignition switch on (IG).
(e) Turn on the tester.
(f) Select the item "DIAGNOSIS / OBD/MOBD / ECT / ACTIVE TEST / SHIFT".
(g) According to the display on the tester, perform the "ACTIVE TEST".

HINT:
While driving, the shift position can be forcibly changed with the intelligent tester.
Comparing the shift position commanded by the ACTIVE TEST with the actual shift position enables you to confirm the problem (See page AX-30).

Item	Test Details	Diagnostic Note
SHIFT	[Test Details] Operate the shift solenoid valve and set the each shift position by yourself. [Vehicle Condition] Less than 50 km/h (31 mph) [Others] • Press "→" button: Shift up • Press "←" button: Shift down	Possible to check the operation of the shift solenoid valves.

HINT:
- This test can be conducted when the vehicle speed is 50 km/h (31 mph) or less.
- The shift position commanded by the ECM is shown in the DATA LIST/SHIFT display on the intelligent tester.

1	CHECK OTHER DTCS OUTPUT (IN ADDITION TO DTC P0776)

(a) Connect the OBD II scan tool or intelligent tester together with the CAN VIM (controller area network vehicle interface module) to the DLC3.
(b) Turn the ignition switch on (IG) and turn the OBD II scan tool or the intelligent tester main switch ON.
(c) When you use intelligent tester:
Select the item "DIAGNOSIS / ENHANCED OBD II / DTC INFO / CURRENT CODES".

cardiagn.com

(d) Read the DTCs using the OBD II scan tool or the intelligent tester.

Result

Display (DTC output)	Proceed to
Only "P0776" is output	A
"P0776" and other DTCs	B

HINT:
If any other codes besides "P0776" are output, perform the troubleshooting for those DTCs first.

B → **GO TO DTC CHART**

A

2 INSPECT SHIFT SOLENOID VALVE (SL2)

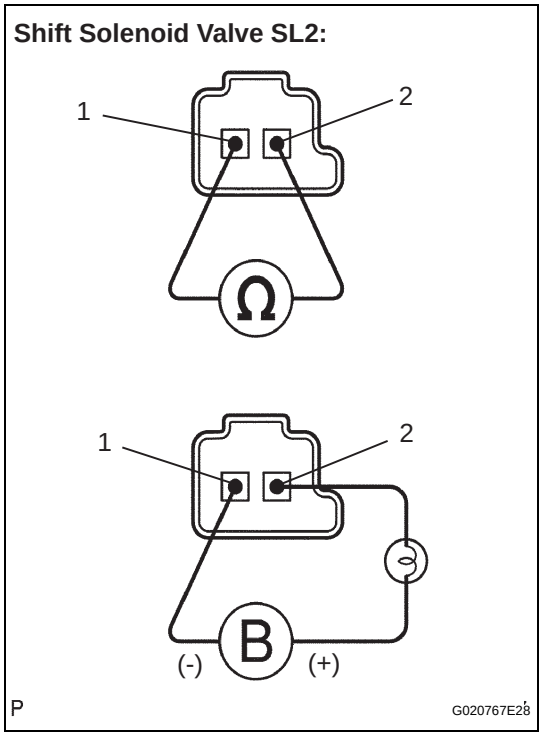

(a) Remove the shift solenoid valve SL2.
(b) Measure the resistance according to the value(s) in the table below.
Standard resistance

Tester Connection	Specified Condition 20°C (68°F)
1 - 2	5.0 to 5.6 Ω

(c) Connect the positive (+) lead with a 21 W bulb to terminal 2 and the negative (-) lead to terminal 1 of the solenoid valve connector, then check the movement of the valve.
OK:
The solenoid makes an operating sound.

NG → **REPLACE SHIFT SOLENOID VALVE (SL2)**

OK

3 INSPECT TRANSMISSION VALVE BODY ASSEMBLY

OK:
There are no foreign objects on each valve.

NG → **REPAIR OR REPLACE TRANSMISSION VALVE BODY ASSEMBLY**

OK

cardiagn.com

4	INSPECT TORQUE CONVERTER CLUTCH ASSEMBLY

OK:
The torque converter clutch operates normally.

NG → **REPLACE TORQUE CONVERTER CLUTCH ASSEMBLY**

OK

REPAIR OR REPLACE AUTOMATIC TRANSAXLE ASSEMBLY

cardiagn.com

DTC	P0778	Pressure Control Solenoid "B" Electrical (Shift Solenoid Valve SL2)

DESCRIPTION

Shifting from 1st to 5th is performed in combination with "ON" and "OFF" operation of the shift solenoid valves SL1, SL2, SL3, S4 and SR which are controlled by the ECM. If an open or short circuit occurs in either of the shift solenoid valves, the ECM controls the remaining normal shift solenoid valves to allow the vehicle to be operated smoothly (Fail safe function).

DTC No.	DTC Detection Condition	Trouble Area
P0778	ECM checks for an open or short circuit in shift solenoid valves SL2 (1-trip detection logic) Hybrid IC for solenoid indicates fail.	• Open or short in shift solenoid valve SL2 circuit • Shift solenoid valve SL2 • ECM

MONITOR DESCRIPTION

The ECM commands gear shifts by turning the shift solenoid valves "ON/OFF". When there is an open or short circuit in any shift solenoid valve circuit, the ECM detects the problem and illuminates the MIL and stores the DTC. And the ECM performs the fail-safe function and turns the other normal shift solenoid valves "ON/OFF" (In case of an open or short circuit, the ECM stops sending current to the circuit.) (See page AX-30).

MONITOR STRATEGY

Related DTCs	P0778: Shift solenoid valve SL2/Range check
Required sensors/Components	Shift solenoid valve SL2
Frequency of operation	Continuous
Duration	1 sec.
MIL operation	Immediate
Sequence of operation	None

TYPICAL ENABLING CONDITIONS

The monitor will run whenever this DTC is not present.	None
Solenoid current cut status	Not cut
Battery voltage	11 V or more
Ignition switch	ON
Starter	OFF
CPU commanded duty ratio to SL2	19% or more

TYPICAL MALFUNCTION THRESHOLDS

Solenoid status from MIC	Fail (Open or short)

COMPONENT OPERATING RANGE

Output signal duty	Less than 100%

cardiagn.com

WIRING DIAGRAM

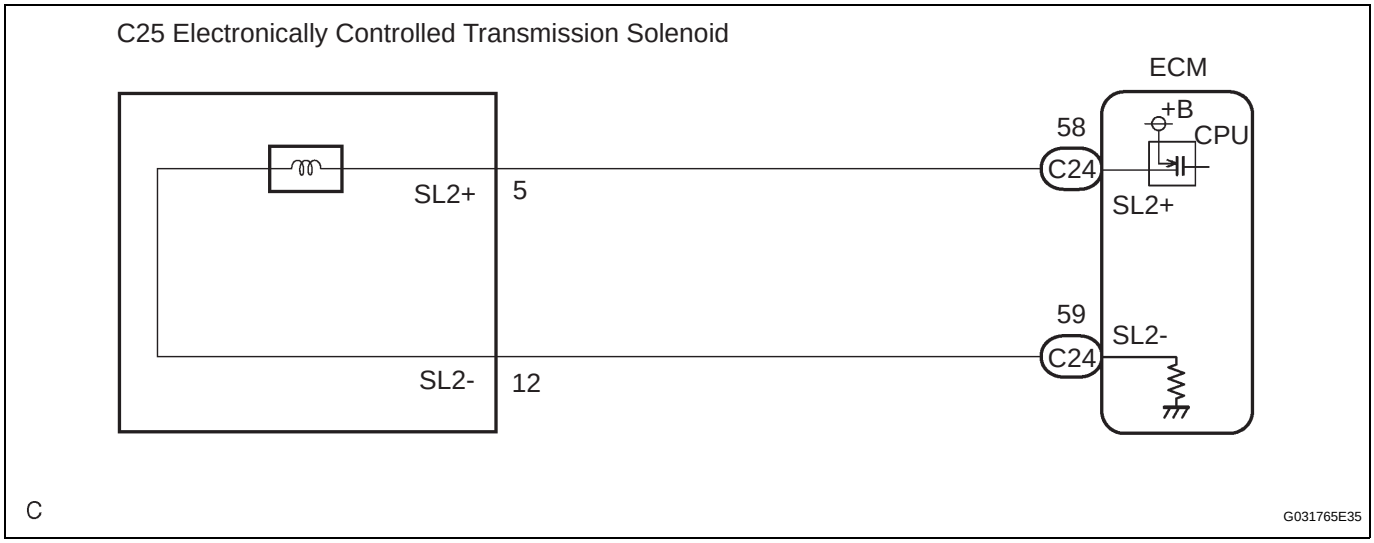

INSPECTION PROCEDURE

1	INSPECT TRANSMISSION WIRE (SL2)

Transmission Wire Side:

(Connector Front View):

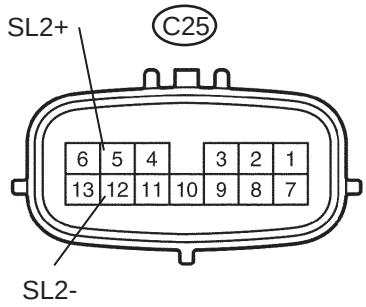

(a) Disconnect the transmission wire connector from the transaxle.

(b) Measure the resistance according to the value(s) in the table below.

Standard resistance

Tester Connection	Specified Condition 20°C (68°F)
5 (SL2+) - 12 (SL2-)	5.0 to 5.6 Ω

(c) Measure the resistance according to the value(s) in the table below.

Standard resistance (Check for short)

Tester Connection	Specified Condition
5 (SL2+) - Body ground	10 kΩ or higher
12 (SL2-) - Body ground	10 kΩ or higher

NG → **Go to step 3**

OK

cardiagn.com

2 CHECK HARNESS AND CONNECTOR (TRANSMISSION WIRE - ECM)

Wire Harness Side:

(Connector Front View):

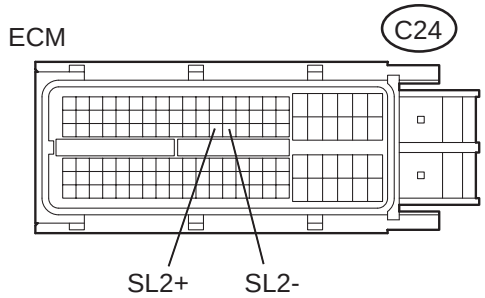

A136781E05

(a) Connect the transmission connector to the transaxle.
(b) Disconnect the connector from the ECM.
(c) Measure the resistance according to the value(s) in the table below.

Standard resistance

Tester Connection	Specified Condition 20°C (68°F)
C24-58 (SL2+) - C24-59 (SL2-)	5.0 to 5.6 Ω

(d) Measure the resistance according to the value(s) in the table below.

Standard resistance (Check for short)

Tester Connection	Specified Condition
C24-58 (SL2+) - Body ground	10 kΩ or higher
C24-59 (SL2-) - Body ground	

NG → **REPAIR OR REPLACE HARNESS OR CONNECTOR**

OK

REPLACE ECM

3 INSPECT SHIFT SOLENOID VALVE (SL2)

Shift Solenoid Valve SL2:

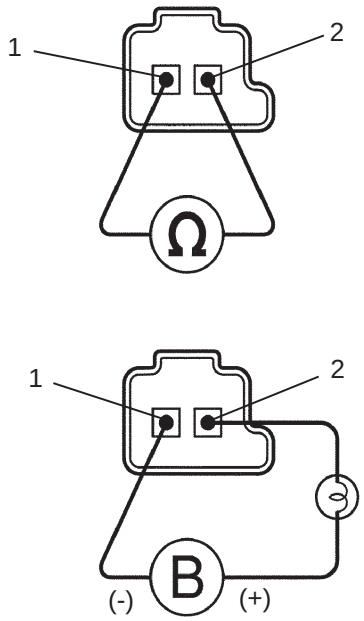

P

G020767E28

(a) Remove the shift solenoid valve SL2.
(b) Measure the resistance according to the value(s) in the table below.

Standard resistance

Tester Connection	Specified Condition 20°C (68°F)
1 - 2	5.0 to 5.6 Ω

(c) Connect the positive (+) lead with a 21 W bulb to terminal 2 and the negative (-) lead to terminal 1 of the solenoid valve connector, then check the movement of the valve.

OK:

The solenoid makes an operating sound.

NG → **REPLACE SHIFT SOLENOID VALVE (SL2)**

cardiagn.com

OK

REPAIR OR REPLACE TRANSMISSION WIRE

cardiagn.com

DTC	P0793	Intermediate Shaft Speed Sensor "A"

DESCRIPTION

This sensor detects the rotation speed of the counter gear. By comparing the counter gear speed signal (NC) with the direct clutch speed sensor signal (NT), the ECM detects the shift timing of the gears and appropriately controls the engine torque and hydraulic pressure according to various conditions. Thus smooth gear shifting is performed.

DTC No.	DTC Detection Condition	Trouble Area
P0793	ECM detects conditions (a), (b) and (c) continuously for 5 sec. or more: (1-trip detection logic) (a) Vehicle speed: 50 km/h (31 mph) or more (b) Park/neutral position switch (STAR) is OFF (c) Speed sensor (NC): less than 300 rpm	• Open or short in transmission revolution sensor NC (speed sensor NC) circuit • Transmission revolution sensor NC (speed sensor NC) • ECM

Reference (Using an oscilloscope):
Check the waveform between terminals NC+ and NC- of the ECM connector.

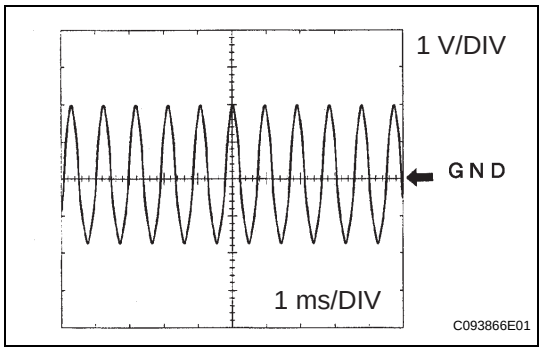

Standard: Refer to the illustration.

Terminal	**NC+ - NC-**
Tool setting	**1 V/DIV, 1ms/DIV**
Vehicle condition	**Vehicle speed 30 km/h (19 mph): (3rd gear) Engine speed 1,400 rpm**

MONITOR DESCRIPTION

The NC terminal of the ECM detects a revolution signal from the speed sensor (NC) (counter gear rpm). The ECM calculates a gearshift comparing the speed sensor (NT) with the speed sensor (NC).
While the vehicle is operating in 2nd, 3rd, 4th or 5th gear in the shift position of D, if the counter gear revolution is less than 300 rpm *1although the output shaft revolution is more than 1,000 rpm *2, the ECM detects the trouble, illuminates the MIL and stores the DTC.
*1: Pulse is not output or is irregularly output.
*2: The vehicle speed is 50 km/h (31 mph) or more.

MONITOR STRATEGY

Related DTCs	P0793: Speed sensor (NC)/Verify pulse input
Required sensors/Components	Speed sensor (NC), Speed sensor (NT), Park/neutral position switch
Frequency of operation	Continuous
Duration	5 sec.
MIL operation	Immediate
Sequence of operation	None

cardiagn.com

TYPICAL ENABLING CONDITIONS

The monitor will run whenever this DTC is not present.	P0500 (VSS) P0748, P0778, P0798 (Shift solenoid valve(range))
Engine	Running
NSW switch	OFF
Output shaft rpm	1,000 rpm or more
Battery voltage	8 V or more
Ignition switch	ON
Starter	OFF

TYPICAL MALFUNCTION THRESHOLDS

Sensor signal rpm	Less than 300 rpm

COMPONENT OPERATING RANGE

Counter gear speed sensor (NC)	HINT: 3rd when shift lever position is D position (After warming up the engine); • Intermediate shaft speed (NC) becomes close to the engine speed.

WIRING DIAGRAM

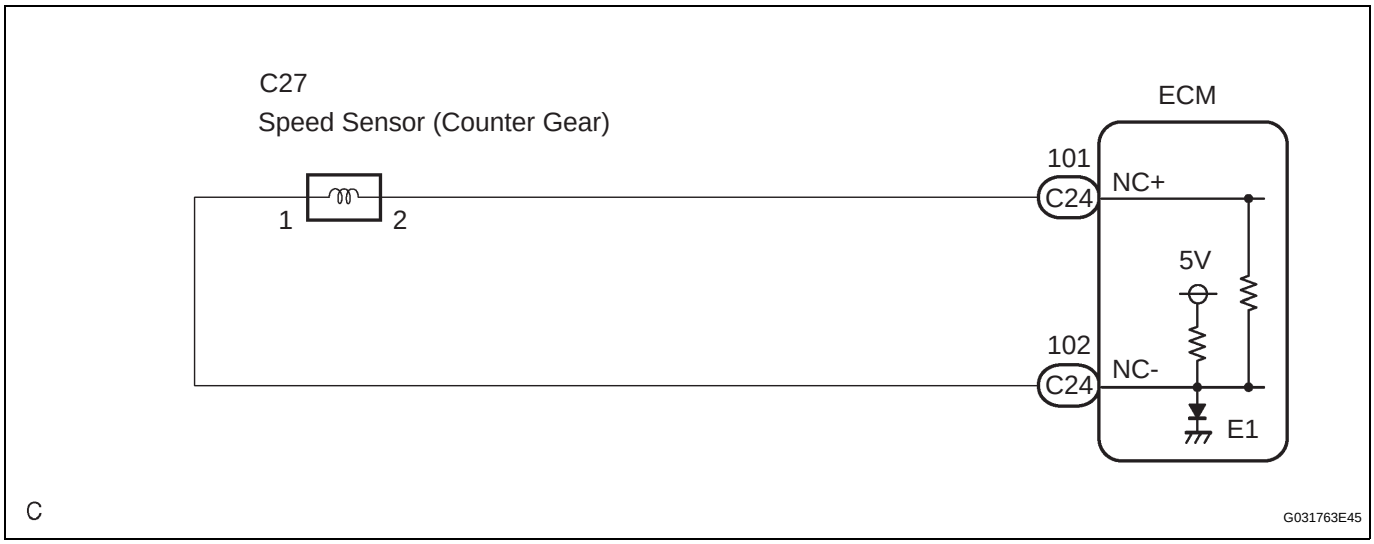

INSPECTION PROCEDURE

HINT:
According to the DATA LIST displayed by the OBD II scan tool or intelligent tester, you can read the value of the switch, sensor, actuator and so on without parts removal. Reading the DATA LIST as the first step of troubleshooting is one method to shorten labor time.

1. READ DATA LIST

(a) Warm up the engine.
(b) Turn the ignition switch off.
(c) Connect the OBD II scan tool or intelligent tester together with the CAN VIM (controller area network vehicle interface module) to the DLC3.
(d) Turn the ignition switch on (IG).
(e) Turn on the tester.
(f) Select the item "DIAGNOSIS / OBD/MOBD / ECT / DATA LIST".
(g) According to the display on the tester, read the "DATA LIST".

cardiagn.com

Item	Measurement Item/ Range (display)	Normal Condition
SPD (NC)	Counter Gear Speed/ display: 50 r/min	[HINT] 3rd when shift lever position is D position (After warming up the engine); • Intermediate shaft speed (NC) becomes close to the engine speed.

HINT:
- SPD (NC) is always 0 while driving:
  Open or short in the sensor or circuit.
- SPD (NC) is always more than 0 and less than 300 rpm while driving the vehicle at 50 km/h (31 mph) or more:
  Sensor trouble, improper installation, or intermittent connection trouble of the circuit.

1 INSPECT SPEED SENSOR INSTALLATION

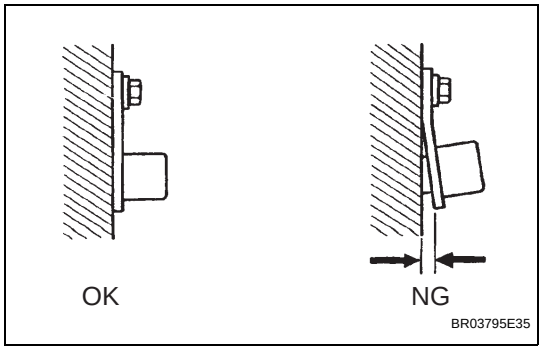

(a) Check the speed sensor installation.
OK:
The installation bolt is tightened properly and there is no clearance between the sensor and transaxle case.

NG → **REPLACE SPEED SENSOR (NC)**

OK

2 INSPECT SPEED SENSOR (NC)

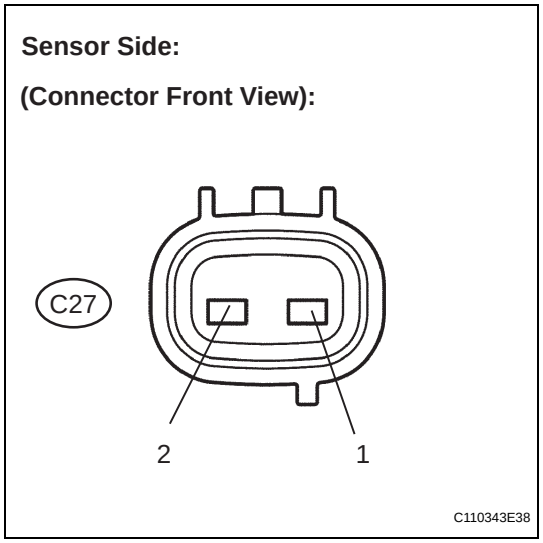

(a) Disconnect the speed sensor connector from the transaxle.
(b) Measure the resistance according to the value(s) in the table below.
Standard resistance

Tester Connection	Specified Condition 20 °C (68 °F)
1 - 2	560 to 680 Ω

NG → **REPLACE SPEED SENSOR (NC)**

OK

cardiagn.com

3 CHECK HARNESS AND CONNECTOR (SPEED SENSOR - ECM)

Wire Harness Side:

(Connector Front View):

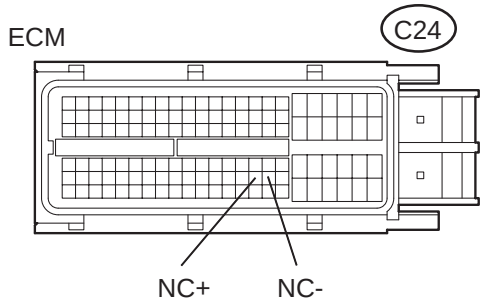

A136781E06

(a) Connect the speed sensor connector.
(b) Disconnect the ECM connector.
(c) Measure the resistance according to the value(s) in the table below.

Standard resistance

Tester Connection	Specified Condition 20 °C (68 °F)
C24-101 (NC+) - C24-102 (NC-)	560 to 680 Ω

(d) Measure the resistance according to the value(s) in the table below.

Standard resistance (Check for short)

Tester Connection	Specified Condition
C24-101 (NC+) - Body ground	10 kΩ or higher
C24-102 (NC-) - Body ground	

NG → **REPAIR OR REPLACE HARNESS OR CONNECTOR**

OK

REPLACE ECM

cardiagn.com

DTC	P0796	Pressure Control Solenoid "C" Performance (Shift Solenoid Valve SL3)

SYSTEM DESCRIPTION

The ECM uses signals from the vehicle speed sensor to detect the actual gear position (1st, 2nd, 3rd, 4th or 5th gear).
Then the ECM compares the actual gear with the shift schedule in the ECM memory to detect mechanical troubles of the shift solenoid valves and valve body.

DTC No.	DTC Detecting Condition	Trouble Area
P0796	The gear required by the ECM does not match the actual gear when driving (2-trip detection logic)	• Shift solenoid valve SL3 remains open or closed • Valve body is blocked • Automatic transaxle (clutch, brake or gear etc.)

MONITOR DESCRIPTION

The ECM commands gear shifts by turning the shift solenoid valves "ON/OFF". According to the input shaft revolution, intermediate (counter) shaft revolution and output shaft revolution, the ECM detects the actual gear position (1st, 2nd, 3rd, 4th or 5th gear position). When the gear position commanded by the ECM and the actual gear position are not the same, the ECM illuminates the MIL and stores the DTC.

MONITOR STRATEGY

Related DTCs	P0796: Shift solenoid valve SL3/OFF malfunction Shift solenoid valve SL3/ON malfunction
Required sensors/Components	Shift solenoid valve SL3, Speed sensor (NT), Speed sensor (NC), Crankshaft position sensor (NE)
Frequency of operation	Continuous
Duration	OFF malfunction (A) 0.8 sec. OFF malfunction (B) 1 sec. ON malfunction (A) and (B) 0.8 sec. ON malfunction (C) 0.4 sec.
MIL operation	2 driving cycles
Sequence of operation	None

TYPICAL ENABLING CONDITIONS

All:

The monitor will run whenever this DTC is not present.	P0115 - P0118 (ECT sensor) P0125 (Insufficient ECT for closed loop) P0500 (VSS) P0748, P0778, P0798 (Shift solenoid valve (range))
ECT (Engine coolant temperature)	10°C (50°F) or more
Transmission range	"D"
TFT (Transmission fluid temperature)	-20°C (-4°F) or more
TFT sensor circuit	Not circuit malfunction
ECT sensor circuit	Not circuit malfunction
Turbine speed sensor circuit	Not circuit malfunction
Intermediate shaft speed sensor circuit	Not circuit malfunction
Output speed sensor circuit	Not circuit malfunction
Shift solenoid valve SL1 circuit	Not circuit malfunction
Shift solenoid valve SL2 circuit	Not circuit malfunction

cardiagn.com

Shift solenoid valve SL3 circuit	Not circuit malfunction
Shift solenoid valve S4 circuit	Not circuit malfunction
Shift solenoid valve SR circuit	Not circuit malfunction
Shift solenoid valve DSL circuit	Not circuit malfunction
Electronic throttle system	Not circuit malfunction

OFF malfunction (A):

ECM selected gear	4th or 5th
Throttle valve opening angle	4.5% or more at engine speed 1,900 rpm (Varies with engine speed)

OFF malfunction (B):

ECM selected gear	4th
Throttle valve opening angle	5% or more
Vehicle speed	10 km/h (6.2 mph) or more

ON malfunction (A):

ECM selected gear	1st
Vehicle speed	Less than 40 km/h (24.9 mph)
Throttle valve opening angle	4.5% or more at engine speed 1,900 rpm (Varies with engine speed)

ON malfunction (B):

ECM selected gear	3rd
Throttle valve opening angle	7.0% or more at output speed 1,400 rpm (Varies with engine speed)
Malfunction of pressure control solenoid "B" (SL2) and "C" (SL3)	Not detected

ON malfunction (C):

Throttle valve opening angle	7.0% or more at output speed 1,050 rpm (Varies with engine speed)
Malfunction of pressure control solenoid "B" (SL2)	Not detected

TYPICAL MALFUNCTION THRESHOLDS

Either of the following conditions is met: OFF malfunction (A) and (B), or ON malfunctions (A), (B) and (C)

2 detections are necessary per driving cycle:

1st detection; temporary flag ON

2nd detection; pending fault code ON

OFF malfunction (A):

Input (turbine) speed/Intermediate shaft speed	0.93 to 1.07

OFF malfunction (B):

Intermediate shaft speed/Output speed	0.95 to 1.09

ON malfunction (A):

Input (turbine) speed/Intermediate shaft speed	0.93 to 1.07

ON malfunction (B):

Input (turbine) speed - Intermediate shaft speed	700 rpm or more

ON malfunction (C):

Input (turbine) speed - Intermediate shaft speed	Less than -500 rpm or 700 rpm or more

cardiagn.com

INSPECTION PROCEDURE

HINT:
Performing the ACTIVE TEST using the intelligent tester allows the relay, VSV, actuator and so on to operate without parts removal. Performing the ACTIVE TEST as the first step of troubleshooting is one method to shorten labor time.
It is possible to display the DATA LIST during the ACTIVE TEST.

1. PERFORM ACTIVE TEST

(a) Warm up the engine.
(b) Turn the ignition switch off.
(c) Connect the OBD II scan tool or intelligent tester together with the CAN VIM (controller area network vehicle interface module) to the DLC3.
(d) Turn the ignition switch on (IG).
(e) Turn on the tester.
(f) Select the item "DIAGNOSIS / OBD/MOBD / ECT / ACTIVE TEST / SHIFT".
(g) According to the display on the tester, perform the "ACTIVE TEST".

HINT:
While driving, the shift position can be forcibly changed with the intelligent tester.
Comparing the shift position commanded by the ACTIVE TEST with the actual shift position enables you to confirm the problem (See page AX-30).

Item	Test Details	Diagnostic Note
SHIFT	[Test Details] Operate the shift solenoid valve and set each shift position by yourself. [Vehicle Condition] Less than 50 km/h (31 mph) [Others] • Press "→" button: Shift up • Press "←" button: Shift down	Possible to check the operation of the shift solenoid valves.

HINT:
- This test can be conducted when the vehicle speed is 50 km/h (31 mph) or less.
- The shift position commanded by the ECM is shown in the DATA LIST/SHIFT display on the intelligent tester.

1	CHECK OTHER DTCS OUTPUT (IN ADDITION TO DTC P0796)

(a) Connect the OBD II scan tool or intelligent tester together with the CAN VIM (controller area network vehicle interface module) to the DLC3.
(b) Turn the ignition switch on (IG) and turn the OBD II scan tool or the intelligent tester main switch ON.
(c) When you use intelligent tester:
Select the item "DIAGNOSIS / ENHANCED OBD II / DTC INFO / CURRENT CODES".
(d) Read the DTCs using the OBD II scan tool or the intelligent tester.

Result

Display (DTC output)	Proceed to
Only "P0796" is output	A
"P0796" and other DTCs	B

HINT:
If any other codes besides "P0796" are output, perform the troubleshooting for those DTCs first.

cardiagn.com

B → **GO TO DTC CHART**

A

2 INSPECT SHIFT SOLENOID VALVE (SL3)

Shift Solenoid Valve SL3:

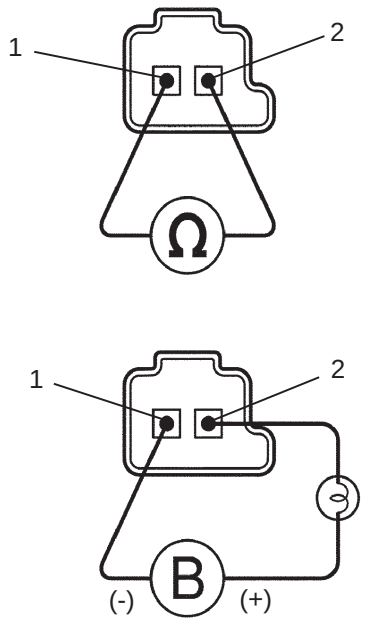

(a) Remove the shift solenoid valve SL3.

(b) Measure the resistance according to the value(s) in the table below.

Resistance

Tester Connection	Specified Condition 20°C (68°F)
1 - 2	5.0 to 5.6 Ω

(c) Connect the positive (+) lead with a 21 W bulb to terminal 2 and the negative (-) lead to terminal 1 of the solenoid valve connector, then check the movement of the valve.

OK:

The solenoid makes an operating sound.

NG → **REPLACE SHIFT SOLENOID VALVE (SL3)**

OK

3 INSPECT TRANSMISSION VALVE BODY ASSEMBLY

OK:

There are no foreign objects on each valve.

NG → **REPAIR OR REPLACE TRANSMISSION VALVE BODY ASSEMBLY**

OK

4 INSPECT TORQUE CONVERTER CLUTCH ASSEMBLY

OK:

The torque converter clutch operates normally.

NG → **REPLACE TORQUE CONVERTER CLUTCH ASSEMBLY**

OK

REPAIR OR REPLACE AUTOMATIC TRANSAXLE ASSEMBLY

cardiagn.com

DTC	P0798	Pressure Control Solenoid "C" Electrical (Shift Solenoid Valve SL3)

DESCRIPTION

Shifting from 1st to 5th is performed in combination with "ON" and "OFF" operation of the shift solenoid valves SL1, SL2, SL3, S4 and SR which are controlled by the ECM. If an open or short circuit occurs in either of the shift solenoid valves, the ECM controls the remaining normal shift solenoid valves to allow the vehicle to be operated smoothly (Fail safe function).

DTC No.	DTC Detection Condition	Trouble Area
P0798	The ECM checks for an open or short in the shift solenoid valve SL3 circuit while driving and shifting gears. (1-trip detection logic) – Output signal duty equals to 100 %. (NOTE: SL3 output signal duty is less than 100 % under normal condition.)	• Open or short in shift solenoid valve SL3 circuit • Shift solenoid valve SL3 • ECM

MONITOR DESCRIPTION

The ECM commands gear shifts by turning the shift solenoid valves "ON/OFF". When there is an open or short circuit in any shift solenoid valve circuit, the ECM detects the problem and illuminates the MIL and stores the DTC. And the ECM performs the fail-safe function and turns the other normal shift solenoid valves "ON/OFF" (In case of an open or short circuit, the ECM stops sending current to the circuit.) (See page AX-30).

MONITOR STRATEGY

Related DTCs	P0798: Shift solenoid valve SL3/Range check
Required sensors/Components	Shift solenoid valve SL3
Frequency of operation	Continuous
Duration	1 sec.
MIL operation	Immediate
Sequence of operation	None

TYPICAL ENABLING CONDITIONS

The monitor will run whenever this DTC is not present.	None
Battery voltage	11 V or more
Ignition switch	ON
Starter	OFF

TYPICAL MALFUNCTION THRESHOLDS

Solenoid status from MIC	Fail (Open or short)

COMPONENT OPERATING RANGE

Output signal duty	Less than 100%

cardiagn.com

WIRING DIAGRAM

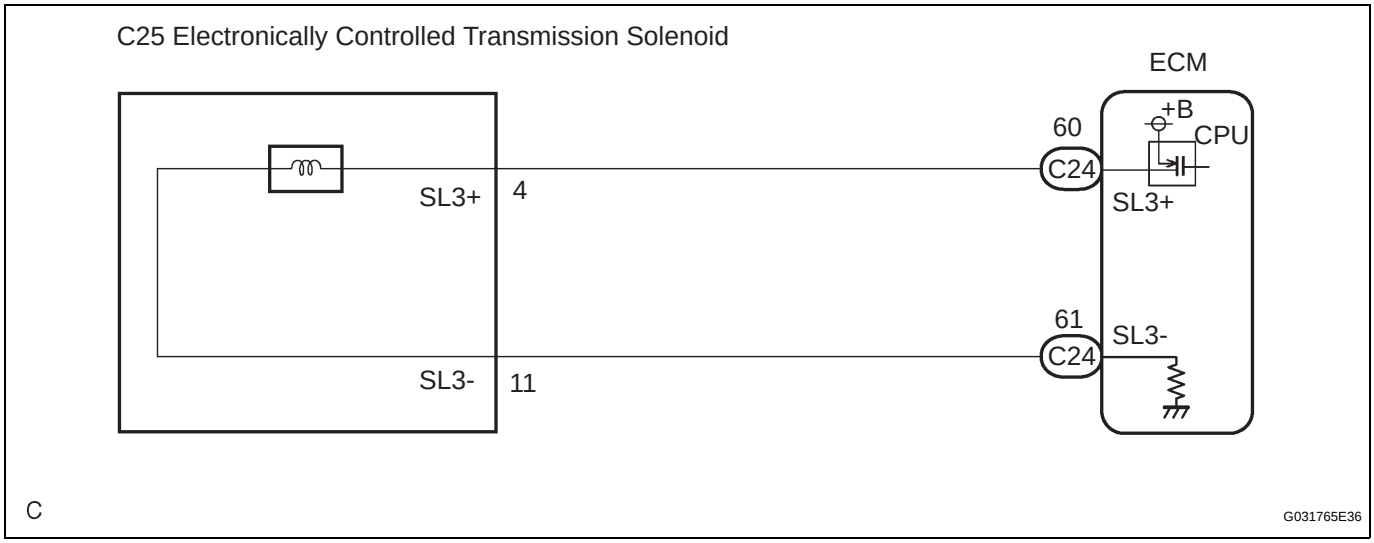

INSPECTION PROCEDURE

1	INSPECT TRANSMISSION WIRE (SL3)

Transmission Wire Side:

(Connector Front View):

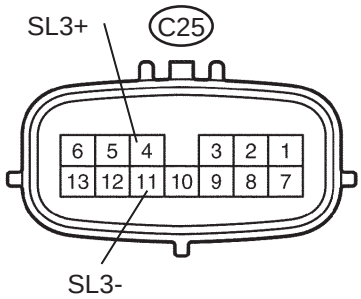

(a) Disconnect the transmission wire connector from the transaxle.

(b) Measure the resistance according to the value(s) in the table below.

Standard resistance

Tester Connection	Specified Condition 20°C (68°F)
4 (SL3+) - 11 (SL3-)	5.0 to 5.6 Ω

(c) Measure the resistance according to the value(s) in the table below.

Standard resistance (Check for short)

Tester Connection	Specified Condition
4 (SL3+) - Body ground	10 kΩ or higher
11 (SL3-) - Body ground	

NG → **Go to step 3**

OK

cardiagn.com

2 CHECK HARNESS AND CONNECTOR (TRANSMISSION WIRE - ECM)

Wire Harness Side:

(Connector Front View):

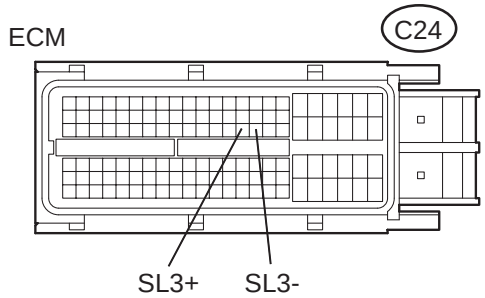

A136781E07

(a) Connect the transmission connector to the transaxle.
(b) Disconnect the connector from the ECM.
(c) Measure the resistance according to the value(s) in the table below.

Standard resistance

Tester Connection	Specified Condition 20°C (68°F)
C24-60 (SL3+) - C24-61 (SL3-)	5.0 to 5.6 Ω

(d) Measure the resistance according to the value(s) in the table below.

Standard resistance (Check for short)

Tester Connection	Specified Condition
C24-60 (SL3+) - Body ground	10 kΩ or higher
C24-61 (SL3-) - Body ground	

NG → **REPAIR OR REPLACE HARNESS OR CONNECTOR**

OK

REPLACE ECM

3 INSPECT SHIFT SOLENOID VALVE (SL3)

Shift Solenoid Valve SL3:

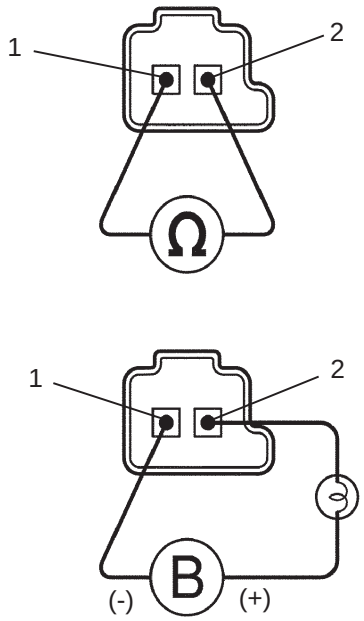

P

G020767E29

(a) Remove the shift solenoid valve SL3.
(b) Measure the resistance according to the value(s) in the table below.

Standard resistance

Tester Connection	Specified Condition 20°C (68°F)
1 - 2	5.0 to 5.6 Ω

(c) Connect the positive (+) lead with a 21 W bulb to terminal 2 and the negative (-) lead to terminal 1 of the solenoid valve connector, then check the movement of the valve.

OK:

The solenoid makes an operating sound.

NG → **REPLACE SHIFT SOLENOID VALVE (SL3)**

cardiagn.com

OK

REPAIR OR REPLACE TRANSMISSION WIRE

cardiagn.com

DTC	P0982	Shift Solenoid "D" Control Circuit Low (Shift Solenoid Valve S4)

DTC	P0983	Shift Solenoid "D" Control Circuit High (Shift Solenoid Valve S4)

DESCRIPTION

Shifting from 1st to 5th is performed in combination with "ON" and "OFF" operation of the shift solenoid valves SL1, SL2, SL3, S4 and SR which are controlled by the ECM. If an open or short circuit occurs in either of the shift solenoid valves, the ECM controls the remaining normal shift solenoid valves to allow the vehicle to be operated smoothly (Fail safe function).

DTC No.	DTC Detection Condition	Trouble Area
P0982	ECM detects short in solenoid valve S4 circuit 2 times when solenoid valve S4 is operated (1-trip detection logic)	• Short in shift solenoid valve S4 circuit • Shift solenoid valve S4 • ECM
P0983	ECM detects open in solenoid valve S4 circuit 2 times when solenoid valve S4 is not operated (1-trip detection logic)	• Open in shift solenoid valve S4 circuit • Shift solenoid valve S4 • ECM

MONITOR DESCRIPTION

The ECM commands gear shifts by turning the shift solenoid valves "ON/OFF". When there is an open or short circuit in any shift solenoid valve circuit, the ECM detects the problem and illuminates the MIL and stores the DTC. And the ECM performs the fail-safe function and turns the other normal shift solenoid valves "ON/OFF" (In case of an open or short circuit, the ECM stops sending current to the circuit.) (See page AX-30).

MONITOR STRATEGY

Related DTCs	P0982: Shift solenoid valve S4/Range check (Low resistance) P0983: Shift solenoid valve S4/Range check (High resistance)
Required sensors/Components	Shift solenoid valve S4
Frequency of operation	Continuous
Duration	0.064 sec. or more
MIL operation	Immediate
Sequence of operation	None

TYPICAL ENABLING CONDITIONS

P0982: Range check (Low resistance):

The monitor will run whenever this DTC is not present.	None
Shift solenoid valve S4	ON
Battery voltage	8 V or more
Ignition switch	ON
Starter	OFF

P0983: Range check (High resistance):

The monitor will run whenever this DTC is not present.	None
Shift solenoid valve S4	OFF
Battery voltage	8 V or more
Ignition switch	ON
Starter	OFF

cardiagn.com

TYPICAL MALFUNCTION THRESHOLDS

P0982: Range check (Low resistance):

Shift solenoid valve S4 resistance	8 Ω or less

P0983: Range check (High resistance):

Shift solenoid valve S4 resistance	100 kΩ or more

COMPONENT OPERATING RANGE

Shift solenoid valve S4	Resistance: 11 to 15 Ω at 20°C (68°F)

WIRING DIAGRAM

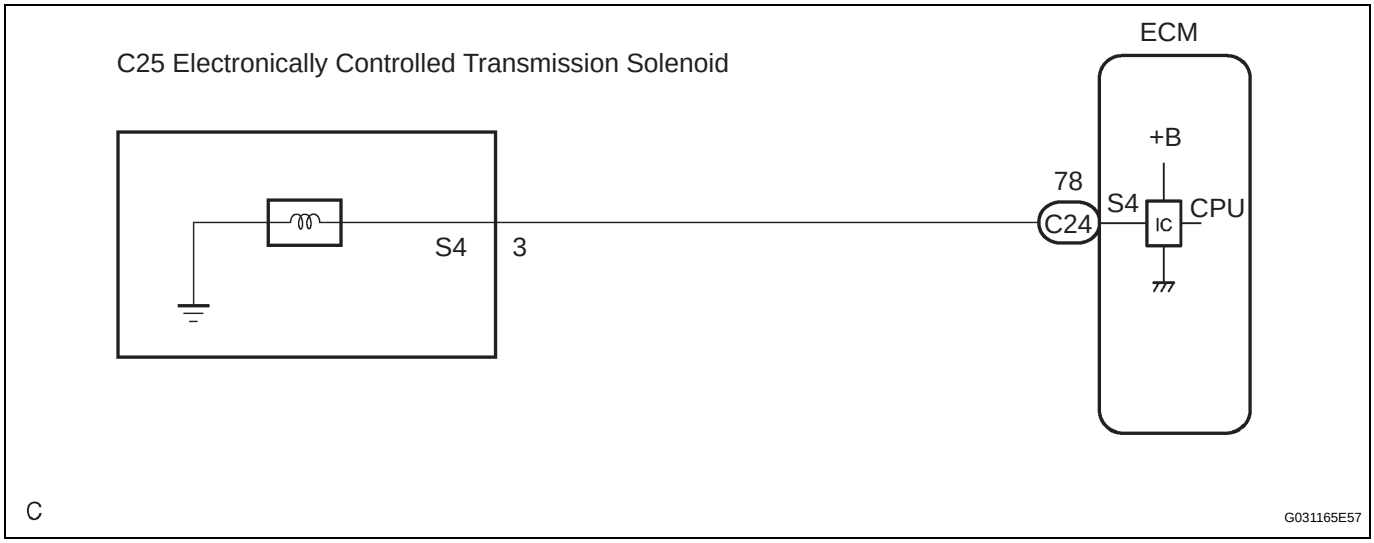

INSPECTION PROCEDURE

1	INSPECT TRANSMISSION WIRE (S4)

Transmission Wire Side:

(Connector Front View):

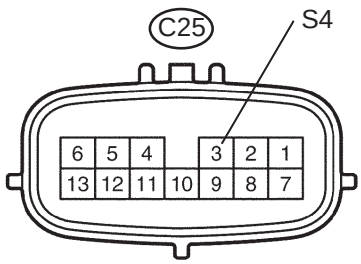

(a) Disconnect the transmission wire connector from the transaxle.

(b) Measure the resistance according to the value(s) in the table below.

Standard resistance

Tester Connection	Specified Condition 20°C (68°F)
3 - Body ground	11 to 15 Ω

NG → **Go to step 3**

OK

cardiagn.com

2 CHECK HARNESS AND CONNECTOR (TRANSMISSION WIRE - ECM)

Wire Harness Side:

(Connector Front View):

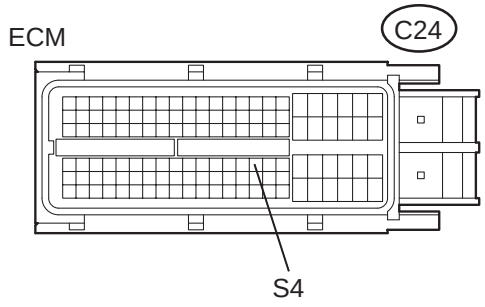

A136781E08

(a) Connect the transmission connector to the transaxle.
(b) Disconnect the connector from the ECM.
(c) Measure the resistance according to the value(s) in the table below.

Standard resistance

Tester Connection	Specified Condition 20°C (68°F)
C24-78 (S4) - Body ground	11 to 15 Ω

NG → **REPAIR OR REPLACE HARNESS OR CONNECTOR**

OK

REPLACE ECM

3 INSPECT SHIFT SOLENOID VALVE (S4)

Shift Solenoid Valve S4:

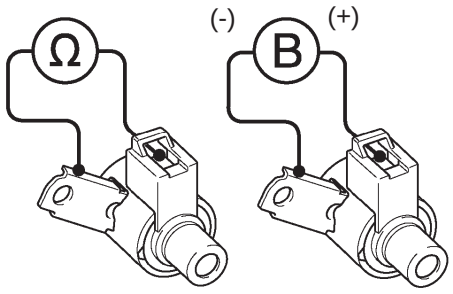

N

C113971E01

(a) Remove the shift solenoid valve S4.
(b) Measure the resistance according to the value(s) in the table below.

Standard resistance

Tester Connection	Specified Condition 20°C (68°F)
Solenoid Connector (S4) - Solenoid Body (S4)	11 to 15 Ω

(c) Connect the positive (+) lead to the terminal of the solenoid connector, and the negative (-) lead to the solenoid body.

OK:

The solenoid makes an operating sound.

NG → **REPLACE SHIFT SOLENOID VALVE (S4)**

OK

REPAIR OR REPLACE TRANSMISSION WIRE

cardiagn.com

DTC	P0985	Shift Solenoid "E" Control Circuit Low (Shift Solenoid Valve SR)

DTC	P0986	Shift Solenoid "E" Control Circuit High (Shift Solenoid Valve SR)

DESCRIPTION

Shifting from 1st to 5th is performed in combination with "ON" and "OFF" operation of the shift solenoid valves SL1, SL2, SL3, S4 and SR which are controlled by the ECM. If an open or short circuit occurs in either of the shift solenoid valves, the ECM controls the remaining normal shift solenoid valves to allow the vehicle to be operated smoothly (Fail safe function).

DTC No.	DTC Detection Condition	Trouble Area
P0985	ECM detects short in solenoid valve SR circuit 2 times when solenoid valve SR is operated (1-trip detection logic)	• Short in shift solenoid valve SR circuit • Shift solenoid valve SR • ECM
P0986	ECM detects open in solenoid valve SR circuit 2 times when solenoid valve SR is not operated (1-trip detection logic)	• Open in shift solenoid valve SR circuit • Shift solenoid valve SR • ECM

MONITOR DESCRIPTION

The ECM commands gear shifts by turning the shift solenoid valves "ON/OFF". When there is an open or short circuit in any shift solenoid valve circuit, the ECM detects the problem and illuminates the MIL and stores the DTC. And the ECM performs the fail-safe function and turns the other normal shift solenoid valves "ON/OFF" (In case of an open or short circuit, the ECM stops sending current to the circuit.) (See page AX-30).

MONITOR STRATEGY

Related DTCs	P0985: Shift solenoid valve SR/Range check (Low resistance) P0986: Shift solenoid valve SR/Range check (High resistance)
Required sensors/Components	Shift solenoid valve SR
Frequency of operation	Continuous
Duration	0.064 sec. or more
MIL operation	Immediate
Sequence of operation	None

TYPICAL ENABLING CONDITIONS

P0985: Range check (Low resistance):

The monitor will run whenever this DTC is not present.	None
Shift solenoid valve SR	ON
Battery voltage	8 V or more
Ignition switch	ON
Starter	OFF

P0986: Range check (High resistance):

The monitor will run whenever this DTC is not present.	None
Shift solenoid valve SR	OFF
Battery voltage	8 V or more
Ignition switch	ON
Starter	OFF

cardiagn.com

TYPICAL MALFUNCTION THRESHOLDS

P0985: Range check (Low resistance):

Shift solenoid valve SR resistance	8 Ω or less

P0986: Range check (High resistance):

Shift solenoid valve SR resistance	100 kΩ or more

COMPONENT OPERATING RANGE

Shift solenoid valve SR	Resistance: 11 to 15 Ω at 20°C (68°F)

WIRING DIAGRAM

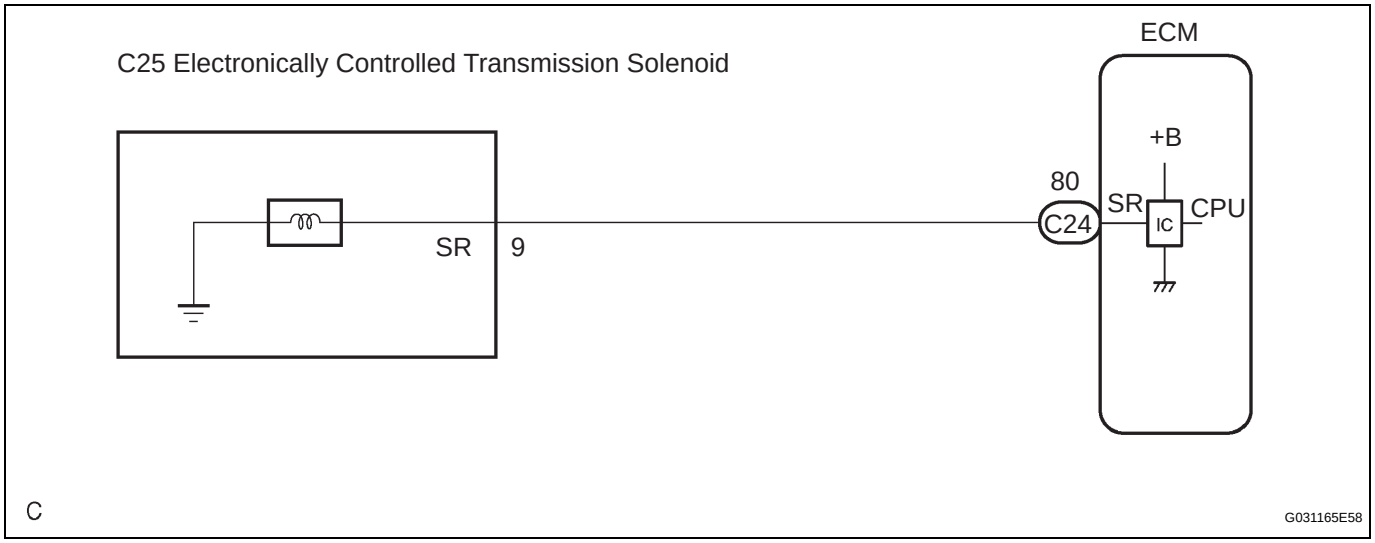

INSPECTION PROCEDURE

1	INSPECT TRANSMISSION WIRE (SR)

Transmission Wire Side:

(Connector Front View):

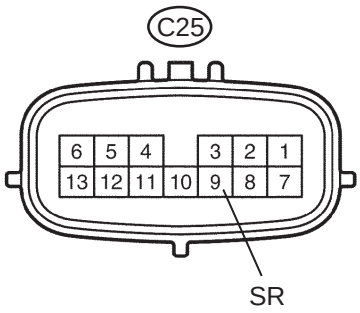

(a) Disconnect the transmission wire connector from the transaxle.

(b) Measure the resistance according to the value(s) in the table below.

Standard resistance

Tester Connection	Specified Condition 20°C (68°F)
9 - Body ground	11 to 15 Ω

NG → **Go to step 3**

OK

cardiagn.com

2 CHECK HARNESS AND CONNECTOR (TRANSMISSION WIRE - ECM)

Wire Harness Side:

(Connector Front View):

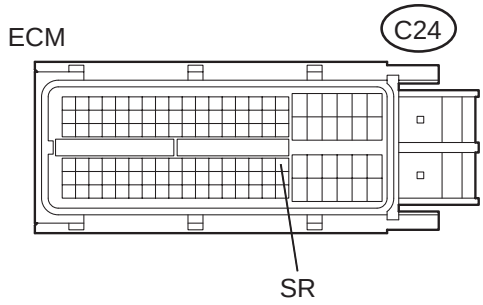

A136781E09

(a) Connect the transmission connector to the transaxle.
(b) Disconnect the connector from the ECM.
(c) Measure the resistance according to the value(s) in the table below.

Standard resistance

Tester Connection	Specified Condition 20°C (68°F)
C24-80 (SR) - Body ground	11 to 15 Ω

NG → **REPAIR OR REPLACE HARNESS OR CONNECTOR**

OK

REPLACE ECM

3 INSPECT SHIFT SOLENOID VALVE (SR)

Shift Solenoid Valve SR:

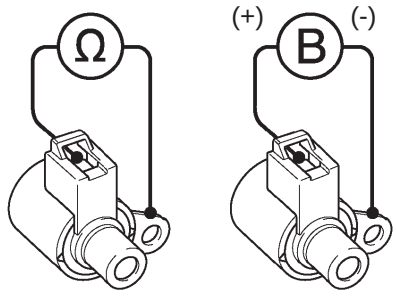

N

C113977E01

(a) Remove the shift solenoid valve SR.
(b) Measure the resistance according to the value(s) in the table below.

Standard resistance

Tester Connection	Specified Condition 20°C (68°F)
Solenoid Connector (SR) - Solenoid Body (SR)	11 to 15 Ω

(c) Connect the positive (+) lead to the terminal of the solenoid connector, and the negative (-) lead to the solenoid body.

OK:

The solenoid makes an operating sound.

NG → **REPLACE SHIFT SOLENOID VALVE (SR)**

OK

REPAIR OR REPLACE TRANSMISSION WIRE

cardiagn.com

DTC	P2714	Pressure Control Solenoid "D" Performance (Shift Solenoid Valve SLT)

SYSTEM DESCRIPTION

The linear solenoid valve (SLT) controls the transmission line pressure for smooth transmission operation based on signals from the throttle position sensor and the vehicle speed sensor. The ECM adjusts the duty ratio (*) of the SLT solenoid valve to control hydraulic line pressure coming from the primary regulator valve. Appropriate line pressure assures smooth shifting with varying engine outputs.
(*): Duty Ratio
The duty ratio is the ratio of the period of continuity in one cycle. For example, if A is the period of continuity in one cycle, and B is the period of non-continuity, then
Duty Ratio= A/(A+B) x 100(%)

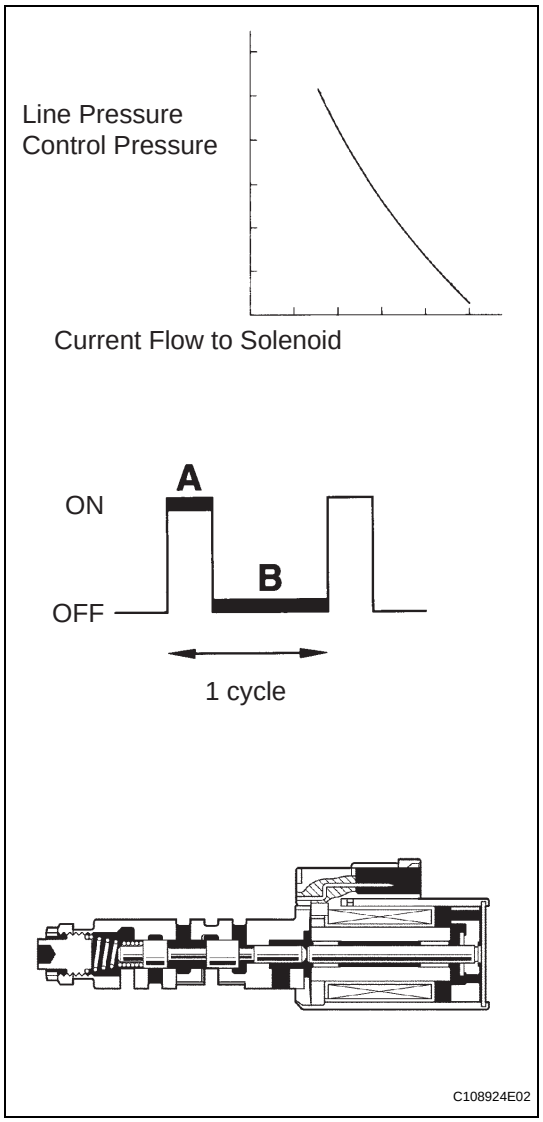

DTC No.	DTC Detection Condition	Trouble Area
P2714	ECM detects a malfunction on SLT (ON side) according to the revolution difference of the turbine, intermediate and the output shaft, and also by the oil pressure. (2-trip detection logic)	• Shift solenoid valve SLT remains closed • Valve body is blocked • Automatic transaxle (clutch, brake or gear, etc.)

cardiagn.com

MONITOR DESCRIPTION

In any forward position, when the difference between the revolutions of the turbine, Intermediate and output shaft exceeds the specified value (varies with Intermediate, output speed) determined by the ECM, the ECM illuminates the MIL and outputs the DTC.
When shift solenoid valve SLT remains on, the oil pressure goes down and the clutch engagement force decreases.

NOTICE:

If you continue driving under these conditions, the clutch will burn out and the vehicle will no longer be drivable.

MONITOR STRATEGY

Related DTCs	P2714: Shift solenoid valve SLT/ON malfunction
Required sensors/Components	Shift solenoid valve SLT, Speed sensor (NT), Speed sensor (NC), Crankshaft position sensor (NE)
Frequency of operation	Continuous
Duration	1 sec.
MIL operation	2 driving cycles
Sequence of operation	None

TYPICAL ENABLING CONDITIONS

ON malfunction:

The monitor will run whenever this DTC is not present.	None
Transmission range	"D"
TFT (Transmission fluid temperature)	-20°C (-4°F) or more
TFT sensor circuit	Not circuit malfunction
ECT sensor circuit	Not circuit malfunction
Turbine speed sensor circuit	Not circuit malfunction
Intermediate shaft speed sensor circuit	Not circuit malfunction
Output speed sensor circuit	Not circuit malfunction
Shift solenoid valve SL1 circuit	Not circuit malfunction
Shift solenoid valve SL2 circuit	Not circuit malfunction
Shift solenoid valve SL3 circuit	Not circuit malfunction
Shift solenoid valve S4 circuit	Not circuit malfunction
Shift solenoid valve SR circuit	Not circuit malfunction
Shift solenoid valve DSL circuit	Not circuit malfunction
Electronic throttle system	Not circuit malfunction

ON malfunction (a):

ECM selected gear	4th
Temporary MAIN gear	1st or 2nd or 3rd or 4th
NT - NC x Temporary MAIN gear ratio NT: Input (turbine) speed NC: Intermediate shaft speed	100 rpm or more at Intermediate shaft speed 1,000 rpm
Temporary U/D gear	Low or High
NC - NO x Temporary U/D gear ratio NO: Output speed	300 rpm or more at Output speed 1,000 rpm
TT TT: Turbine Torque	142 Nm or more
NT	250 rpm or more
NC	250 rpm or more
NO	250 rpm or more

cardiagn.com

ON malfunction (b):

ECM selected gear	5th
Temporary MAIN gear	1st or 2nd or 3rd or 4th
NT - NC x Temporary MAIN gear ratio NT: Input (turbine) speed NC: Intermediate shaft speed	100 rpm or more at Intermediate shaft speed 1,000 rpm
Temporary U/D gear	Low or High
NC - NO x Temporary U/D gear ratio NO: Output speed	300 rpm or more at Output speed 1,000 rpm
TT TT: Turbine Torque	142 Nm or more
NT	250 rpm or more
NC	250 rpm or more
NO	250 rpm or more

TYPICAL MALFUNCTION THRESHOLDS

[ON malfunction]
Detection condition: Total accumulated time of ON malfunctions (a) and (b) is 1 second or more

ON malfunction (a):

NT - NC x 4th gear ratio	100 rpm or more at Intermediate shaft speed 1,000 rpm
NC - NO x Low gear ratio	300 rpm or more at Output speed 1,000 rpm
Duration	0.85 sec. or more
Shift Solenoid valve SL1 Performance	Not performance malfunction

ON malfunction (b):

NT - NC x 4th gear ratio	100 rpm or more at Intermediate shaft speed 1,000 rpm
NC - NO x High gear ratio	300 rpm or more at Output speed 1,000 rpm
Duration	0.85 sec. or more
Shift Solenoid valve SL1 Performance	Not performance malfunction

INSPECTION PROCEDURE

1	CHECK OTHER DTCS OUTPUT (IN ADDITION TO DTC P2714)

(a) Connect the OBD II scan tool or intelligent tester together with the CAN VIM (controller area network vehicle interface module) to the DLC3.
(b) Turn the ignition switch on (IG) and turn the OBD II scan tool or the intelligent tester main switch ON.
(c) When you use intelligent tester:
Select the item "DIAGNOSIS / ENHANCED OBD II / DTC INFO / CURRENT CODES"
(d) Read the DTCs using the OBD II scan tool or the intelligent tester.

Result

Display (DTC output)	Proceed to
Only P2714 is output	**A**
P2714 and other DTCs	**B**

HINT:
If any other codes besides "P2714" are output, perform the troubleshooting for those DTCs first.

cardiagn.com

B → **GO TO DTC CHART**

A

2 INSPECT SHIFT SOLENOID VALVE SLT

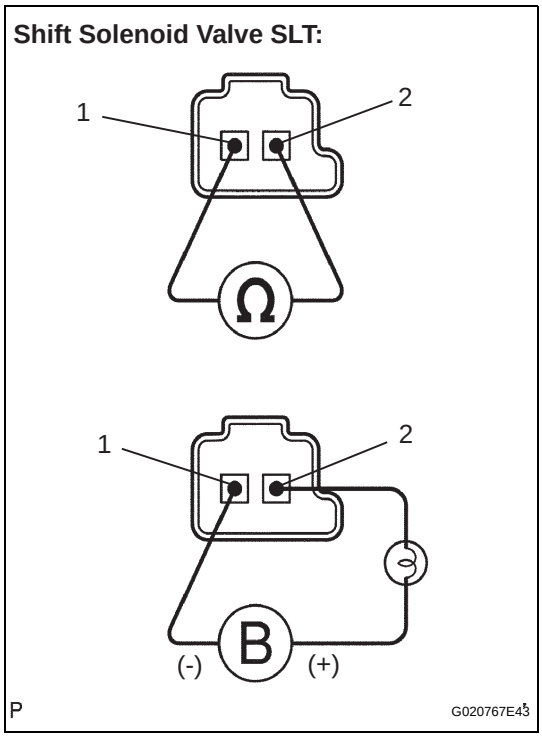

(a) Remove the shift solenoid valve SLT.

(b) Measure the resistance according to the value(s) in the table below.

Standard resistance

Tester Connection	Specified Condition 20°C (68°F)
1-2	5.0 to 5.6 Ω

(c) Connect the positive (+) lead with a 21 W bulb to terminal 2 and the negative (-) lead to terminal 1 of the solenoid valve connector, then check the movement of the valve.

OK:

The solenoid makes an operating sound.

NG → **REPLACE SHIFT SOLENOID VALVE SLT**

OK

3 INSPECT TRANSMISSION VALVE BODY ASSEMBLY

OK:

There are no foreign objects on each valve.

NG → **REPAIR OR REPLACE TRANSMISSION VALVE BODY ASSEMBLY**

OK

4 INSPECT TORQUE CONVERTER CLUTCH ASSEMBLY

OK:

The torque converter clutch operates normally.

NG → **REPLACE TORQUE CONVERTER CLUTCH ASSEMBLY**

OK

REPAIR OR REPLACE AUTOMATIC TRANSAXLE ASSEMBLY

cardiagn.com

DTC	P2716	Pressure Control Solenoid "D" Electrical (Shift Solenoid Valve SLT)

DESCRIPTION

The linear solenoid valve (SLT) controls the transmission line pressure for smooth transmission operation based on signals from the throttle position sensor and the vehicle speed sensor. The ECM adjusts the duty cycle of the SLT solenoid valve to control hydraulic line pressure coming from the primary regulator valve. Appropriate line pressure assures smooth shifting with varying engine outputs.
(*): Duty Ratio
The duty ratio is the ratio of the period of continuity in one cycle.
For example, if A is the period of continuity in one cycle, and B is the period of non-continuity, then
Duty Ratio=A/(A + B) x 100(%)

DTC No.	DTC Detection Condition	Trouble Area
P2716	Open or short is detected in shift solenoid valve SLT circuit for 1 second or more while driving (1-trip detecting logic).	• Open or short in shift solenoid valve SLT circuit • Shift solenoid valve SLT • ECM

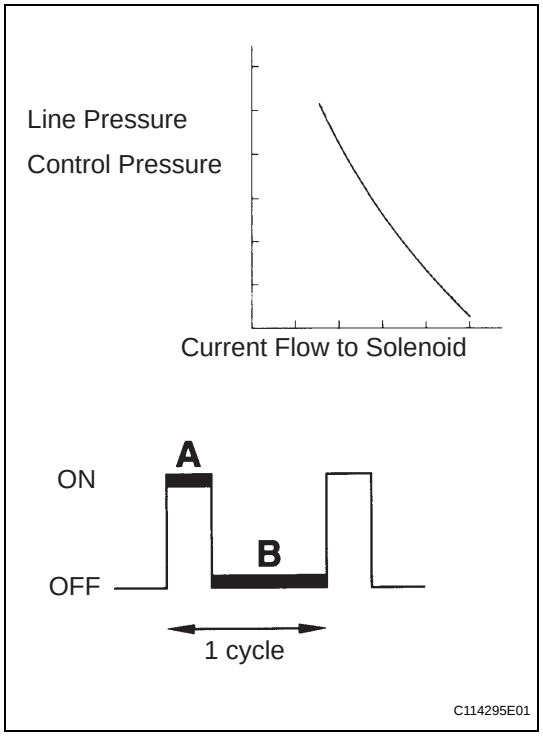

MONITOR DESCRIPTION

When an open or short in the linear solenoid valve (SLT) circuit is detected, the ECM interprets this as a fault. The ECM will turn on the MIL and store the DTC.

MONITOR STRATEGY

Related DTCs	P2716: Shift solenoid valve SLT/Range check
Required sensors/Components	Shift solenoid valve SLT
Frequency of operation	Continuous
Duration	1 sec.
MIL operation	Immediate
Sequence of operation	None

cardiagn.com

TYPICAL ENABLING CONDITIONS

The monitor will run whenever this DTC is not present.	None
Solenoid current cut status	Not cut
Battery voltage	11 V or more
Ignition switch	ON
Starter	OFF
CPU commanded duty ratio to SLT	19% or more

TYPICAL MALFUNCTION THRESHOLDS

Solenoid status from IC	Fail (Open or short)

COMPONENT OPERATING RANGE

Shift solenoid valve SLT	Resistance: 5.0 to 5.6 Ω at 20°C (68°F)

WIRING DIAGRAM

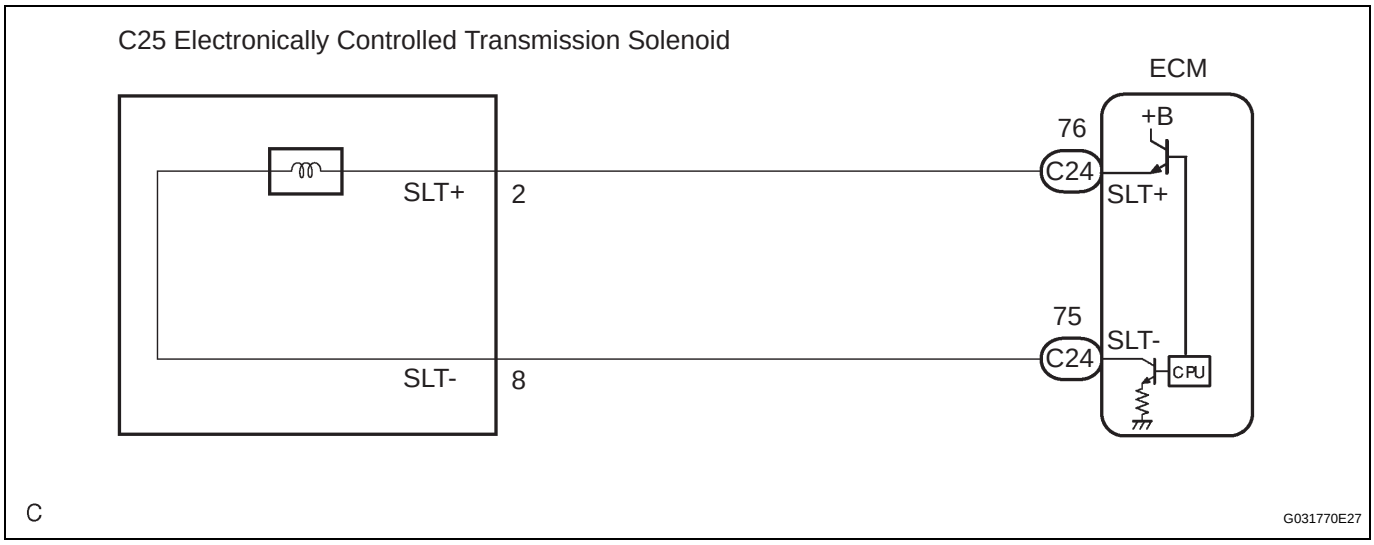

cardiagn.com

INSPECTION PROCEDURE

1 INSPECT TRANSMISSION WIRE (SLT)

Transmission Wire Side:

(Connector Front View):

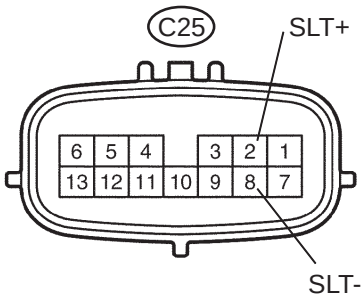

C113969E31

(a) Disconnect the transmission wire connector from the transaxle.
(b) Measure the resistance according to the value(s) in the table below.
Standard resistance

Tester Connection	Specified Condition 20°C (68°F)
2 (SLT+) - 8 (SLT-)	5.0 to 5.6 Ω

(c) Measure the resistance according to the value(s) in the table below.
Standard resistance (Check for short)

Tester Connection	Specified Condition
2 (SLT+) - Body ground	10 kΩ or higher
8 (SLT-) - Body ground	

NG → **Go to step 3**

OK

2 CHECK HARNESS AND CONNECTOR (TRANSMISSION WIRE - ECM)

Wire Harness Side:

(Connector Front View):

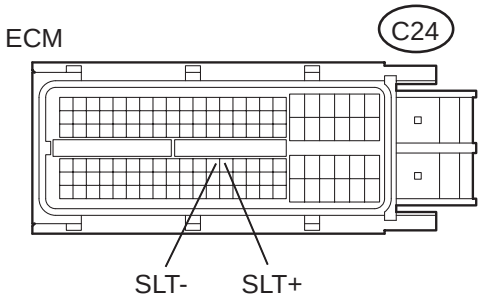

A136781E10

(a) Connect the transmission wire connector to the transaxle.
(b) Disconnect the ECM connector.
(c) Measure the resistance according to the value(s) in the table below.
Standard resistance

Tester Connection	Specified Condition 20°C (68°F)
C24-76 (SLT+) - C24-75 (SLT-)	5.0 to 5.6 Ω

(d) Measure the resistance according to the value(s) in the table below.
Standard resistance (Check for short)

Tester Connection	Specified Condition
C24-76 (SLT+) - Body ground	10 kΩ or higher
C24-75 (SLT-) - Body ground	

NG → **REPAIR OR REPLACE HARNESS OR CONNECTOR**

OK

REPLACE ECM

cardiagn.com

3	INSPECT SHIFT SOLENOID VALVE (SLT)

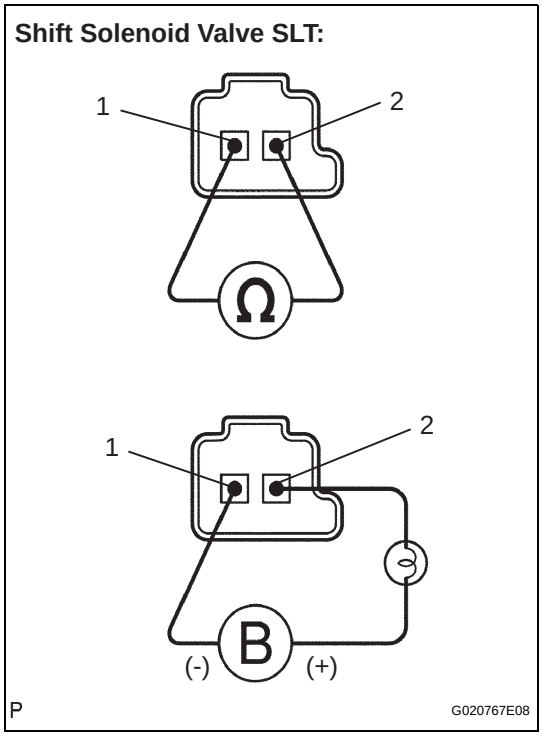

(a) Remove the shift solenoid valve (SLT).

(b) Measure the resistance according to the value(s) in the table below.

Standard resistance

Tester Connection	Specified Condition 20°C (68°F)
1 - 2	5.0 to 5.6 Ω

(c) Connect the positive (+) lead with a 21 W bulb to terminal 2 and the negative (-) lead to terminal 1 of the solenoid valve connector, then check the movement of the valve.

OK:

The solenoid makes an operating sound.

NG → **REPLACE SHIFT SOLENOID VALVE (SLT)**

OK

REPAIR OR REPLACE TRANSMISSION WIRE

cardiagn.com

DTC	P2769	Torque Converter Clutch Solenoid Circuit Low (Shift Solenoid Valve DSL)

DTC	P2770	Torque Converter Clutch Solenoid Circuit High (Shift Solenoid Valve DSL)

DESCRIPTION

The shift solenoid valve DSL is turned "ON" and "OFF" by signals from the ECM in order to control the hydraulic pressure operation, the lock-up relay valve, which then controls operation of the lock-up clutch.

DTC No.	DTC Detection Condition	Trouble Area
P2769	ECM detects short in solenoid valve DSL circuit (0.1 sec.) when solenoid valve DSL is operated (2-trip detection logic)	• Short in shift solenoid valve DSL circuit • Shift solenoid valve DSL • ECM
P2770	ECM detects open in solenoid valve DSL circuit (0.1 sec.) when solenoid valve DSL is not operated (2-trip detection logic)	• Open in shift solenoid valve DSL circuit • Shift solenoid valve DSL • ECM

MONITOR DESCRIPTION

Torque converter lock-up is controlled by the ECM based on engine rpm, engine load, engine temperature, vehicle speed, transmission temperature, and shift range selection. The ECM determines the lock-up status of the torque converter by comparing the engine rpm (NE) to the input turbine rpm (NT). The ECM calculates the actual transmission gear by comparing input turbine rpm (NT) to counter gear rpm (NC). When conditions are appropriate, the ECM requests "lock-up" by applying control voltage to the shift solenoid DSL. When the DSL is opened, it applies pressure to the lock-up relay valve and locks the torque converter clutch. If the ECM detects an open or short in the DSL solenoid circuit, the ECM interprets this as a fault in the DSL solenoid or circuit. The ECM will turn on the MIL and store the DTC.

MONITOR STRATEGY

Related DTCs	P2769: Shift solenoid valve DSL/Range check (Low resistance) P2770: Shift solenoid valve DSL/Range check (High resistance)
Required sensors/Components	Shift solenoid valve DSL
Frequency of operation	Continuous
Duration	0.064 sec. or more
MIL operation	2 driving cycles
Sequence of operation	None

TYPICAL ENABLING CONDITIONS

P2769: Range check (Low resistance):

The monitor will run whenever this DTC is not present.	None
Shift solenoid valve DSL	ON
Solenoid current cut status	Not cut
Battery voltage	8 V or more
Ignition switch	ON
Starter	OFF

P2770: Range check (High resistance):

The monitor will run whenever this DTC is not present.	None
Shift solenoid valve DSL	ON
Battery voltage	8 V or more
Ignition switch	ON

cardiagn.com

Starter	OFF

TYPICAL MALFUNCTION THRESHOLDS

P2769: Range check (Low resistance):

Shift solenoid valve DSL resistance	8 Ω or less

P2770: Range check (High resistance):

Shift solenoid valve DSL resistance	100 kΩ or more

COMPONENT OPERATING RANGE

Shift solenoid valve DSL	Resistance: 11 to 13 Ω at 20°C (68°F)

WIRING DIAGRAM

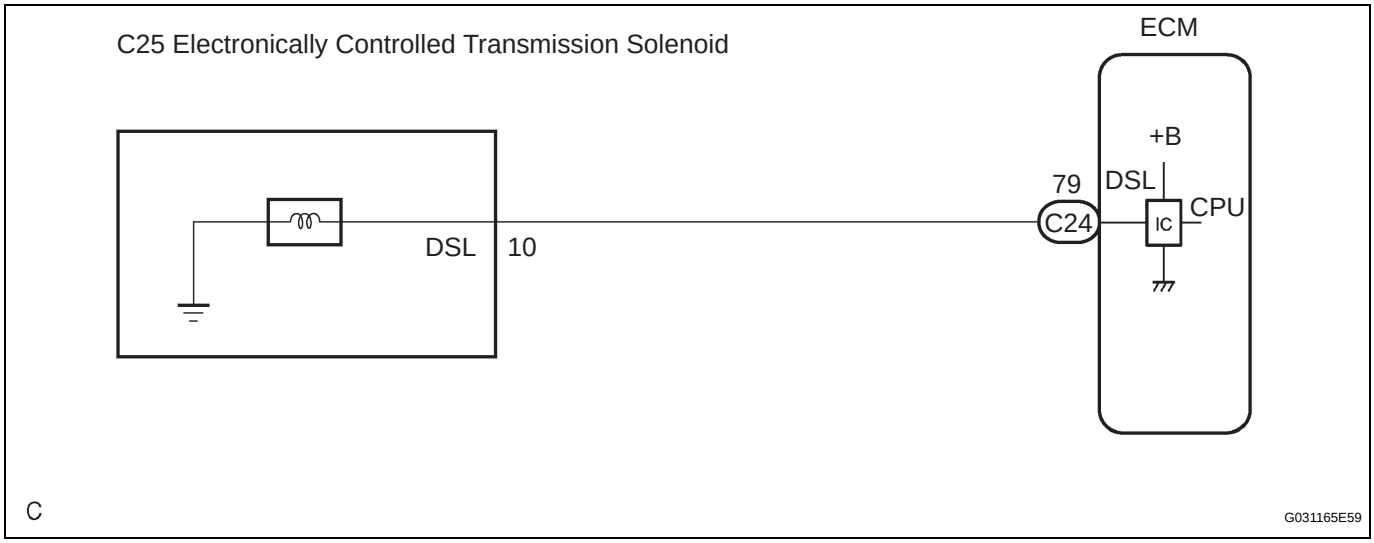

INSPECTION PROCEDURE

1	INSPECT TRANSMISSION WIRE (DSL)

Transmission Wire Side:

(Connector Front View):

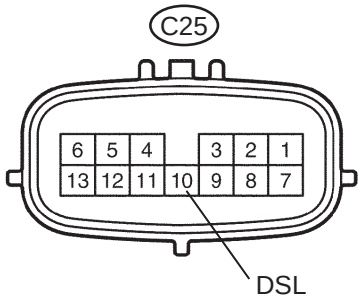

(a) Disconnect the transmission wire connector from the transaxle.

(b) Measure the resistance according to the value(s) in the table below.

Standard resistance

Tester Connection	Specified Condition 20°C (68°F)
10 - Body ground	11 to 13 Ω

NG → **Go to step 3**

cardiagn.com

OK

2 CHECK HARNESS AND CONNECTOR (TRANSMISSION WIRE - ECM)

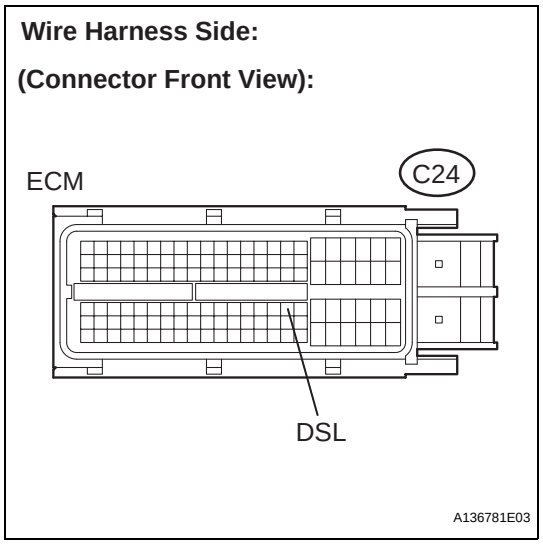

(a) Connect the transmission wire connector.
(b) Disconnect the ECM connector.
(c) Measure the resistance according to the value(s) in the table below.

Standard resistance

Tester Connection	Specified Condition 20°C (68°F)
C24-79 (DSL) - Body ground	11 to 13 Ω

NG → **REPAIR OR REPLACE HARNESS OR CONNECTOR**

OK

REPLACE ECM

3 INSPECT SHIFT SOLENOID VALVE (DSL)

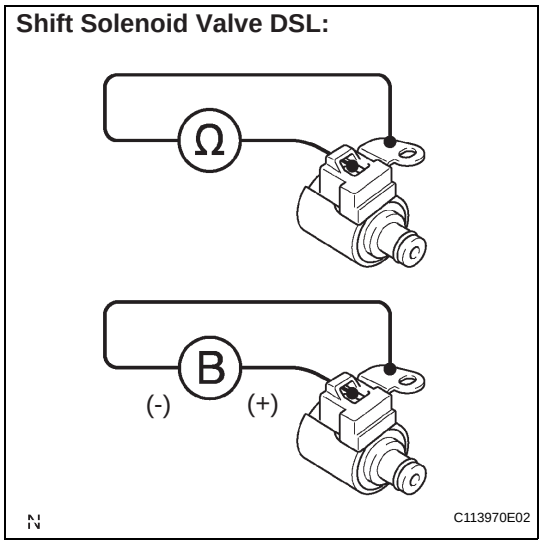

(a) Remove the shift solenoid valve DSL.
(b) Measure the resistance according to the value(s) in the table below.

Standard resistance

Tester Connection	Specified Condition 20°C (68°F)
Solenoid Connector (DSL) - Solenoid Body (DSL)	11 to 13 Ω

(c) Connect the positive (+) lead to the terminal of the solenoid connector, and the negative (-) lead to the solenoid body.

OK:

The solenoid valve makes an operating sound.

NG → **REPLACE SHIFT SOLENOID VALVE (DSL)**

OK

REPAIR OR REPLACE TRANSMISSION WIRE

cardiagn.com

AUTOMATIC TRANSAXLE FLUID

ON-VEHICLE INSPECTION

1. CHECK FLUID LEVEL

HINT:
Drive the vehicle so that the engine and transaxle are at normal operating temperature.
Fluid temperature:
70 to 80°C (158 to 176°F)

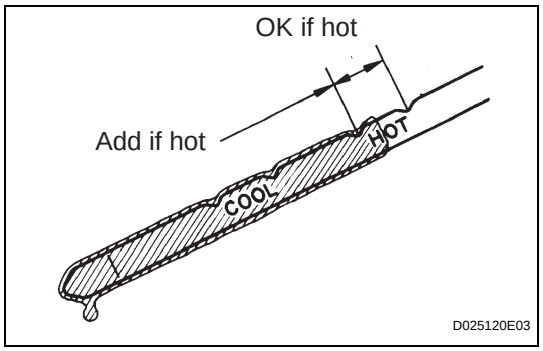

(a) Park the vehicle on a level surface and set the parking brake.
(b) With the engine idling and the brake pedal depressed, move the shift lever to all positions from P to L. Then return it to P.
(c) Pull out the dipstick and wipe it clean.
(d) Push it back fully into the pipe.
(e) Pull it out again and check that the fluid level is within the HOT range. If the fluid level is below the HOT range, add new fluid and recheck the fluid level. If the fluid level exceeds the HOT range, drain the fluid once, add proper amount of new fluid and recheck the fluid level.

cardiagn.com

SPEED SENSOR

COMPONENTS

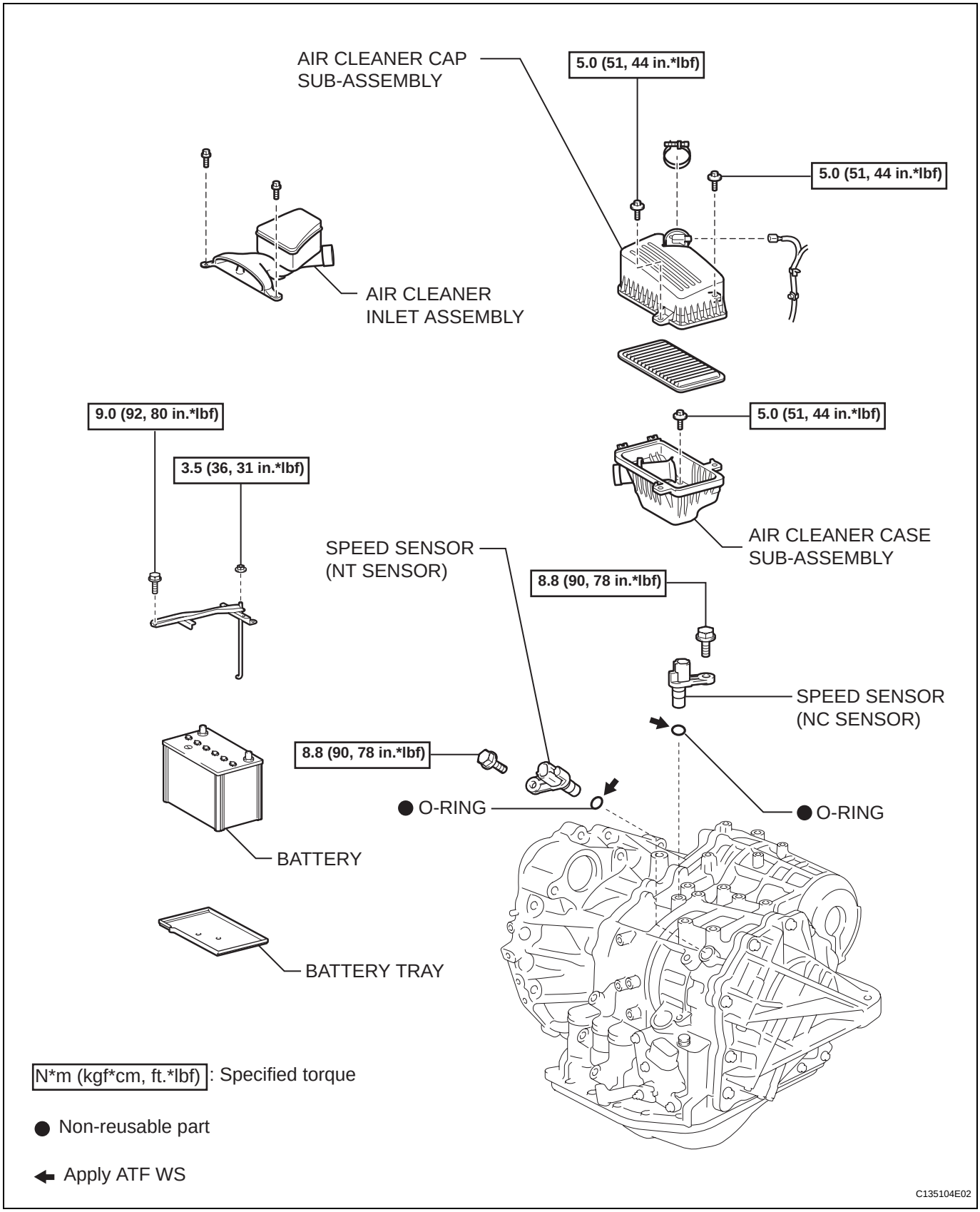

cardiagn.com

REMOVAL

1. **DISCONNECT CABLE FROM NEGATIVE BATTERY TERMINAL**
2. **REMOVE BATTERY (See page EM-95)**
3. **REMOVE AIR CLEANER INLET ASSEMBLY (See page EM-94)**
4. **REMOVE AIR CLEANER CAP SUB-ASSEMBLY (See page ES-416)**
5. **REMOVE AIR CLEANER CASE SUB-ASSEMBLY (See page EM-95)**
6. **REMOVE SPEED SENSOR (NT SENSOR)**
   (a) Disconnect the speed sensor connector.
   (b) Remove the bolt and speed sensor.
   (c) Remove the O-ring from the speed sensor.

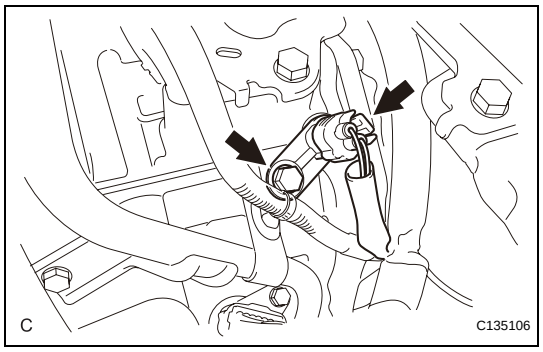

7. **REMOVE SPEED SENSOR (NC SENSOR)**
   (a) Disconnect the speed sensor connector.
   (b) Remove the bolt and speed sensor.
   (c) Remove the O-ring from the speed sensor.

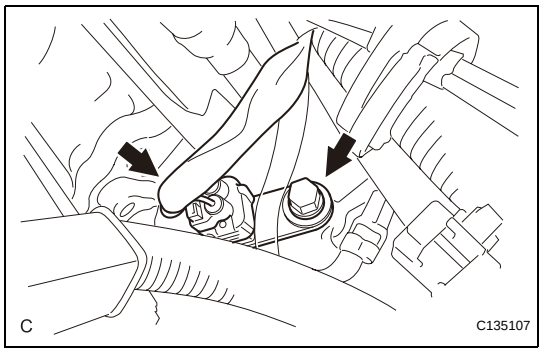

INSPECTION

1. **INSPECT SPEED SENSOR (NT SENSOR)**
   (a) Disconnect the speed sensor connector from the transaxle.
   (b) Measure the resistance according to the value(s) in the table below.
   Standard resistance

Tester Connection	Specified Condition (20°C (68°F))
1 - 2	560 to 680 Ω

If the resistance value is not as specified, replace the speed sensor.

Sensor Side:

(Connector Front View)

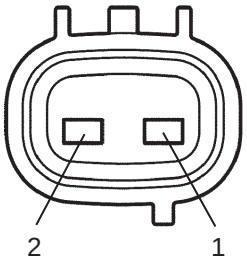

cardiagn.com

Sensor Side:

(Connector Front View)

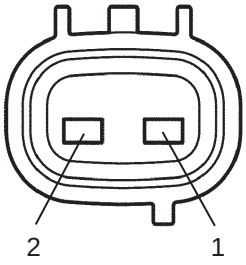

C113863E05

2. INSPECT SPEED SENSOR (NC SENSOR)

(a) Disconnect the speed sensor connector from the transaxle.

(b) Measure the resistance according to the value(s) in the table below.

Standard resistance

Tester Connection	Specified Condition (20°C (68°F))
1 - 2	560 to 680 Ω

If the resistance value is not as specified, replace the speed sensor.

cardiagn.com

INSTALLATION

1. **INSTALL SPEED SENSOR (NC SENSOR)**
   (a) Coat a new O-ring with ATF WS and install it to the speed sensor.
   (b) Install the speed sensor with the bolt.
   Torque: 8.8 N*m (90 kgf*cm, 78 in.*lbf)
   (c) Connect the speed sensor connector.

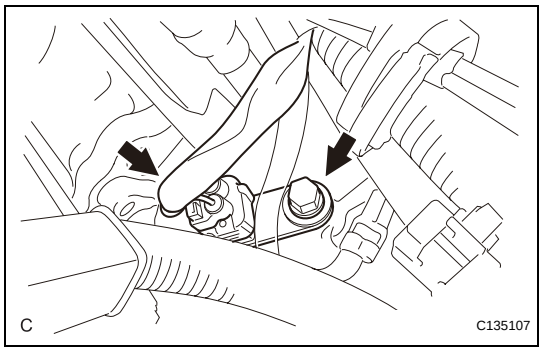

2. **INSTALL SPEED SENSOR (NT SENSOR)**
   (a) Coat a new O-ring with ATF WS and install it to the speed sensor.
   (b) Install the speed sensor with the bolt.
   Torque: 8.8 N*m (90 kgf*cm, 78 in.*lbf)
   (c) Connect the speed sensor connector.

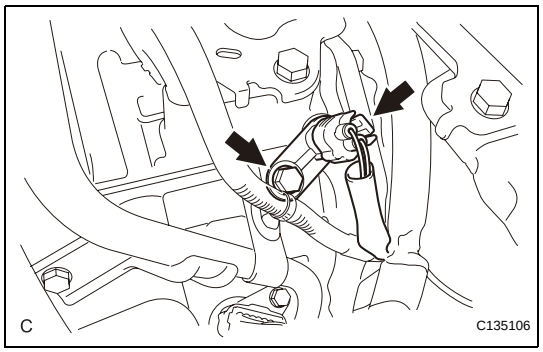

3. **INSTALL AIR CLEANER CASE SUB-ASSEMBLY (See page EM-120)**
4. **INSTALL AIR CLEANER CAP SUB-ASSEMBLY (See page ES-419)**
5. **INSTALL AIR CLEANER INLET ASSEMBLY (See page EM-120)**
6. **INSTALL BATTERY (See page EM-119)**
7. **CONNECT CABLE TO NEGATIVE BATTERY TERMINAL**
   Torque: 6.9 N*m (70 kgf*cm, 61 in.*lbf)

cardiagn.com

PARK / NEUTRAL POSITION SWITCH

COMPONENTS

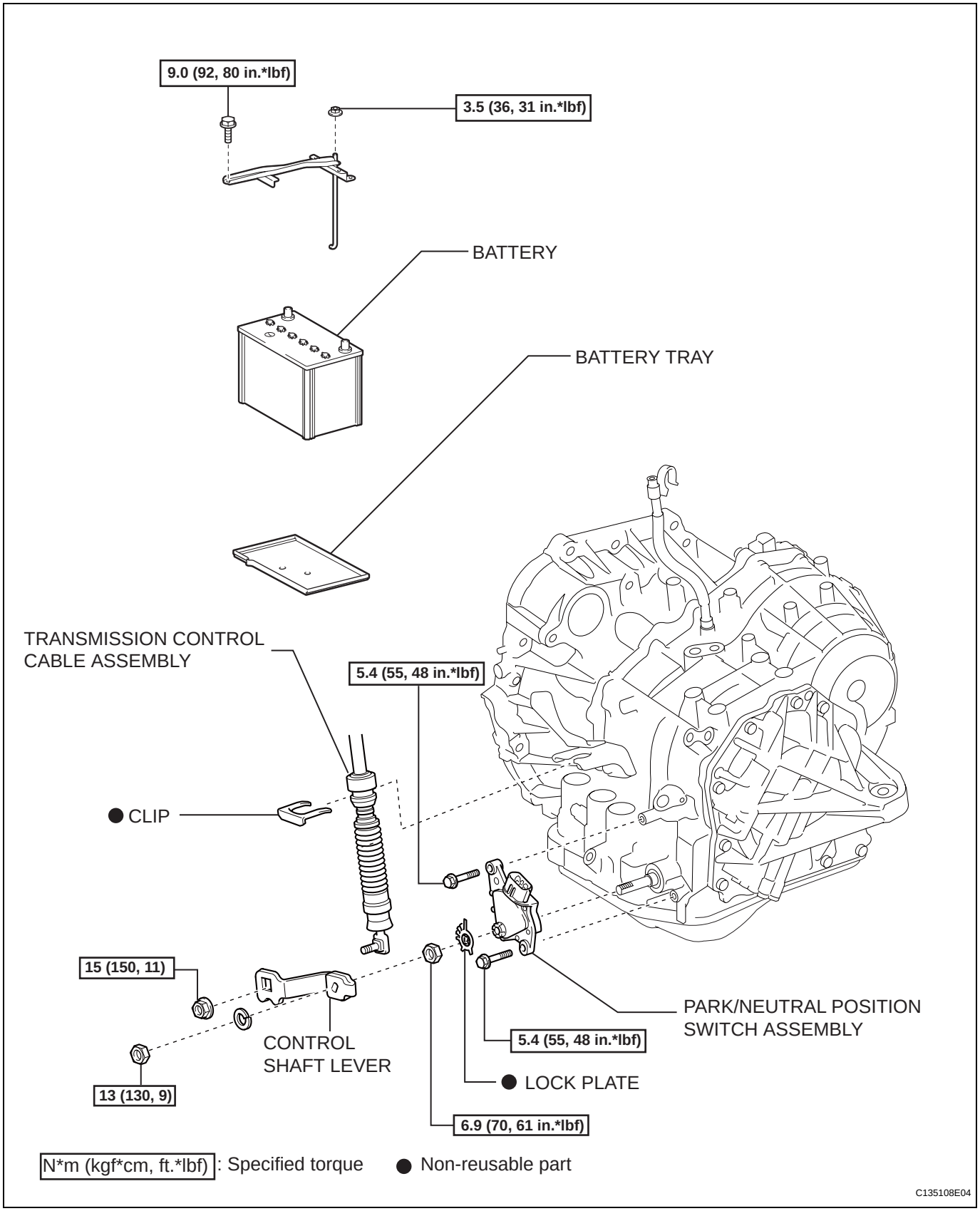

cardiagn.com

REMOVAL

1. DISCONNECT CABLE FROM NEGATIVE BATTERY TERMINAL

2. REMOVE BATTERY (See page EM-95)

3. SEPARATE TRANSMISSION CONTROL CABLE ASSEMBLY

(a) Remove the nut from the control shaft lever.

(b) Disconnect the transmission control cable assembly from the control shaft lever.

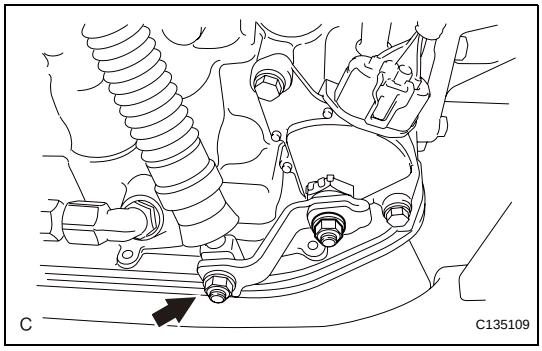

(c) Remove the clip and disconnect the transmission control cable assembly from the No. 1 control cable bracket.

NOTICE:

Do not hold the resin guide pipe.

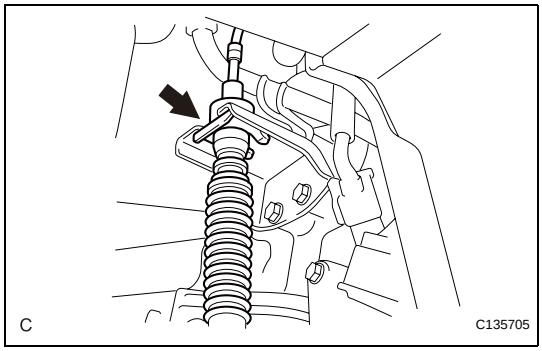

4. REMOVE PARK/NEUTRAL POSITION SWITCH ASSEMBLY

(a) Disconnect the park/neutral position switch connector.

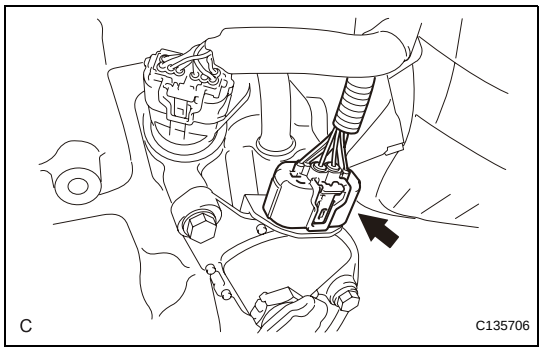

(b) Remove the nut, washer and control shaft lever.

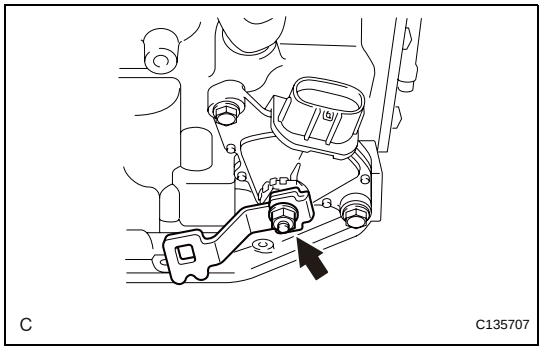

cardiagn.com

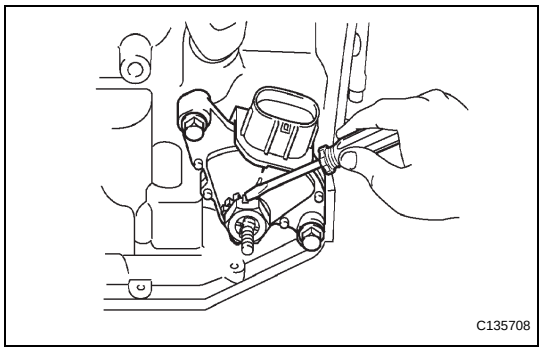

(c) Using a screwdriver, pry up the lock plate.

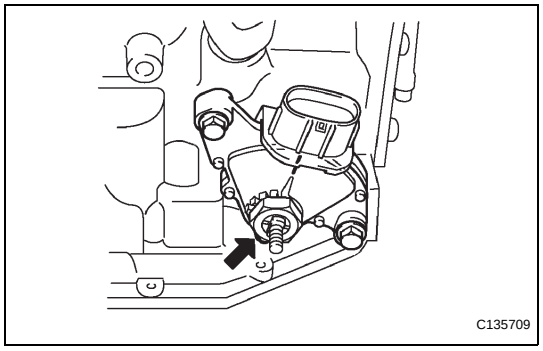

(d) Remove the lock nut and the lock plate.

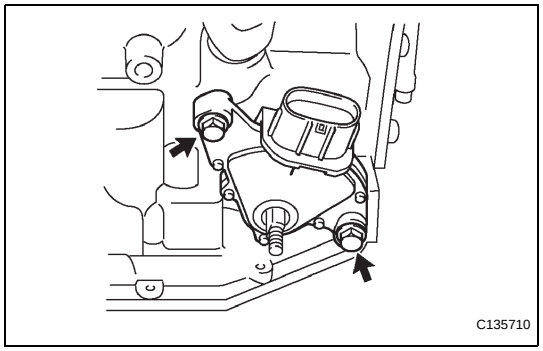

(e) Remove the 2 bolts and pull out the park/neutral position switch.

cardiagn.com

INSPECTION

1. INSPECT PARK/NEUTRAL POSITION SWITCH ASSEMBLY OPERATION

(a) Apply the parking brake and turn the ignition switch to the ON position.

(b) Depress the brake pedal and check that the engine starts only when the shift lever is set in the N or P position.

(c) Check that the back-up light comes on and the reverse warning buzzer sounds only when the shift lever is set in the R position and the light and buzzer do not operate when the shift lever is in other positions.

If a failure is found, check the park/neutral position switch.

2. INSPECT PARK/NEUTRAL POSITION SWITCH ASSEMBLY

(a) Jack up the vehicle.

(b) Disconnect the park/neutral position switch connector.

(c) Measure the resistance according to the value(s) in the table below when the shift lever is moved to each position.

Standard resistance

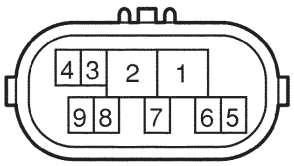

Shift Position	Tester Connection	Specified Condition
P	2 - 6 and 4 - 5	Below 1 Ω
Except P		10 kΩ or higher
R	2 - 1	Below 1 Ω
Except R		10 kΩ or higher
N	2 - 9 and 4 - 5	Below 1 Ω
Except N		10 kΩ or higher
D and 4	2 - 7	Below 1 Ω
Except D and 4		10 kΩ or higher
3	2 - 3	Below 1 Ω
Except 3		10 kΩ or higher
2 and L	2 - 8	Below 1 Ω
Except 2 and L		10 kΩ or higher

If operation cannot be done as specified, replace the park/neutral position switch.

ADJUSTMENT

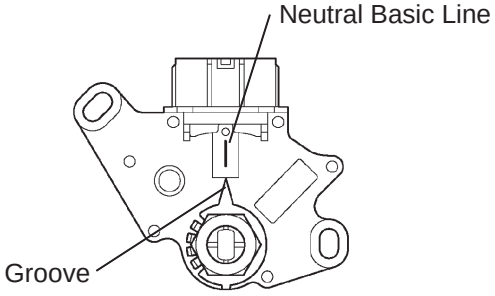

1. ADJUST PARK/NEUTRAL POSITION SWITCH ASSEMBLY

(a) Loosen the 2 bolts of the park/neutral position switch and move the shift lever to the N position.

(b) Align the groove with the neutral basic line.

(c) Hold the switch in position and tighten the 2 bolts.

Torque: 5.4 N*m (55 kgf*cm, 48 in.*lbf)

(d) After adjustment, perform the inspection (See page AX-129).

cardiagn.com

INSTALLATION

1. INSTALL PARK/NEUTRAL POSITION SWITCH ASSEMBLY

(a) Install the park/neutral position switch to the manual valve shaft.

(b) Temporarily install the 2 bolts.

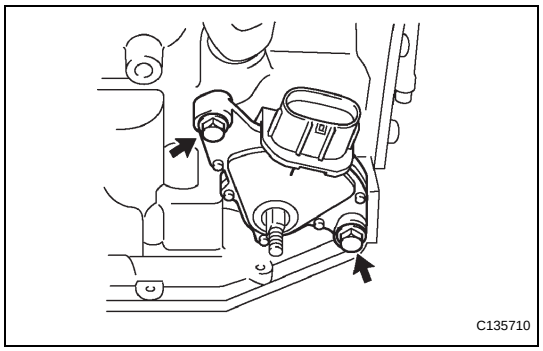

(c) Place a new lock plate and tighten the nut.
Torque: 6.9 N*m (70 kgf*cm, 61 in.*lbf)

(d) Temporarily install the control shaft lever.

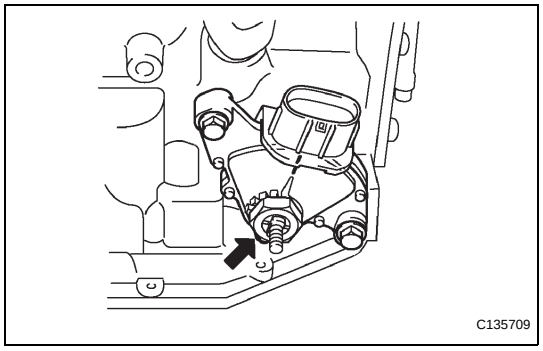

(e) Turn the lever counterclockwise until it stops, then turn it clockwise 2 notches.

(f) Remove the control shaft lever.

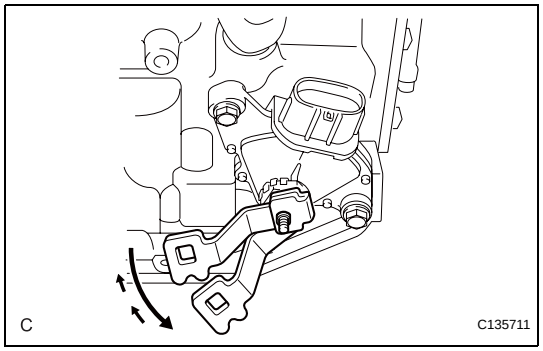

(g) Align the groove with the neutral basic line.

(h) Hold the switch in position and tighten the 2 bolts.
Torque: 5.4 N*m (55 kgf*cm, 48 in.*lbf)

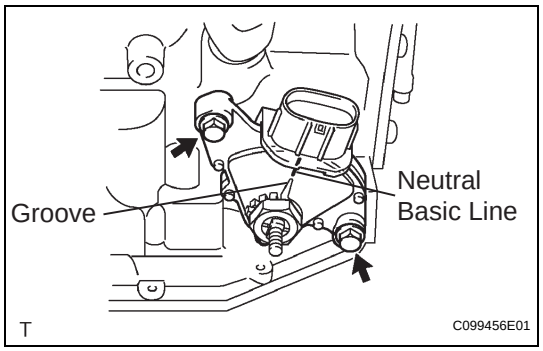

(i) Using a screwdriver, stake the nut with the lock plate.

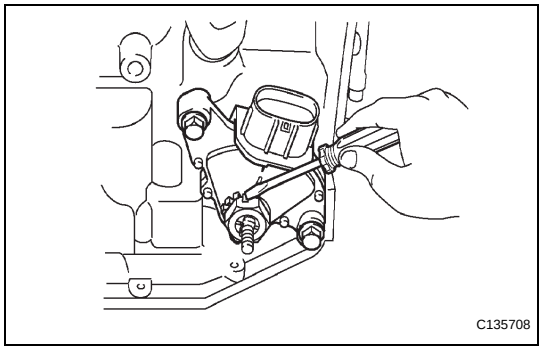

cardiagn.com

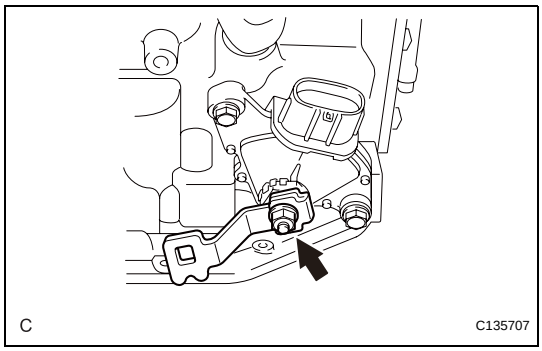

(j) Install the control shaft lever, washer and nut.
Torque: 13 N*m (130 kgf*cm, 9 ft.*lbf)

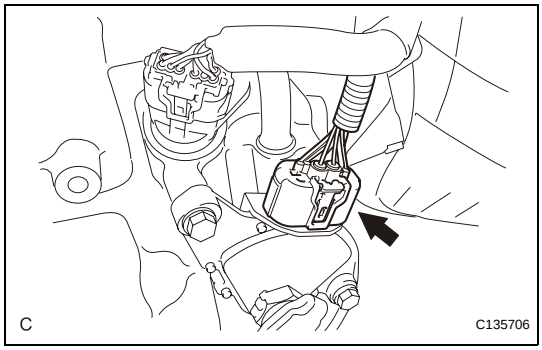

(k) Connect the park/neutral position switch connector.

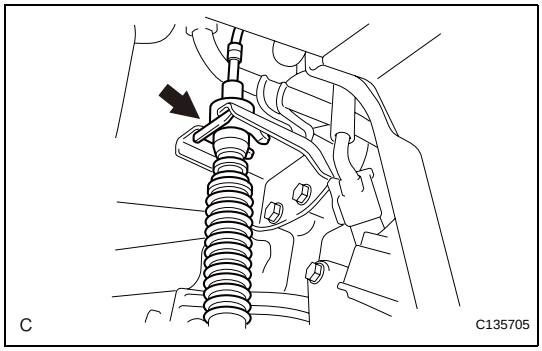

2. CONNECT TRANSMISSION CONTROL CABLE ASSEMBLY

(a) Connect the transmission control cable to the bracket with a new clip.

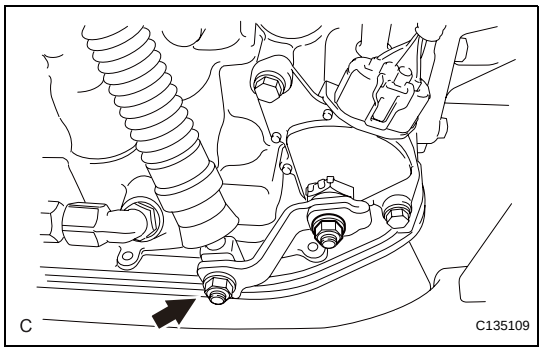

(b) Connect the transmission control cable assembly to the control shaft lever with the nut.
Torque: 15 N*m (150 kgf*cm, 11 ft.*lbf)

3. INSTALL BATTERY (See page EM-119)

4. CONNECT CABLE TO NEGATIVE BATTERY TERMINAL
Torque: 6.9 N*m (70 kgf*cm, 61 in.*lbf)

5. INSPECT SHIFT LEVER POSITION (See page AX-146)

6. ADJUST SHIFT LEVER POSITION (See page AX-146)

7. INSPECT PARK/NEUTRAL POSITION SWITCH ASSEMBLY
HINT:
See page AX-129.

cardiagn.com

TRANSMISSION WIRE

COMPONENTS

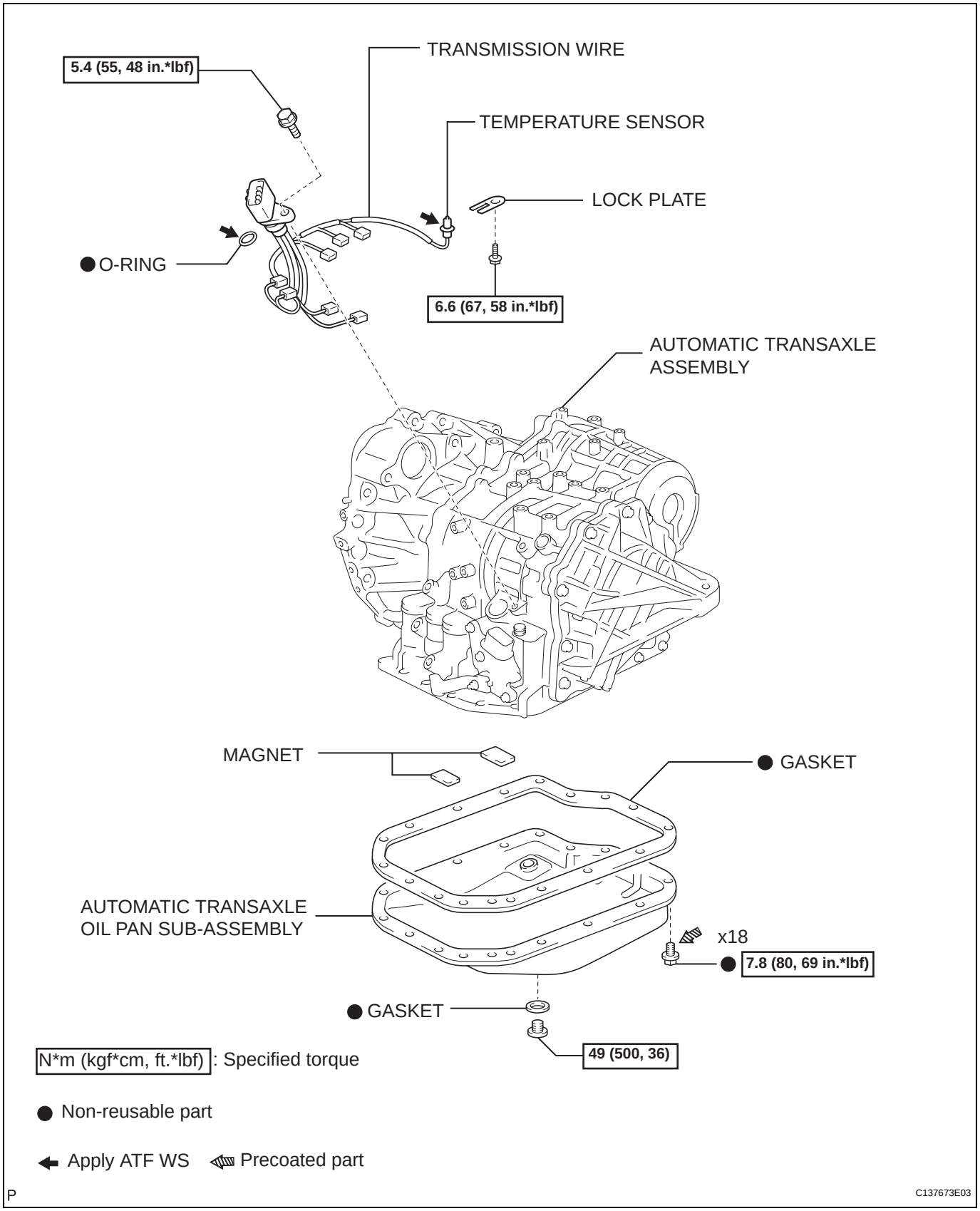

cardiagn.com

REMOVAL

1. REMOVE AUTOMATIC TRANSAXLE ASSEMBLY

HINT:

See page AX-162.

2. REMOVE AUTOMATIC TRANSAXLE OIL PAN SUB-ASSEMBLY

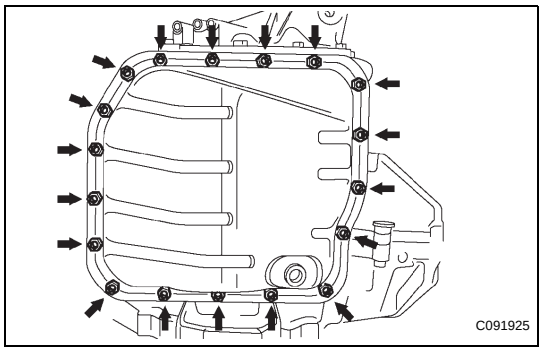

(a) Remove the 18 bolts, oil pan and gasket.

NOTICE:

Some fluid will remain in the oil pan. Remove all the pan bolts, and carefully remove the oil pan assembly.

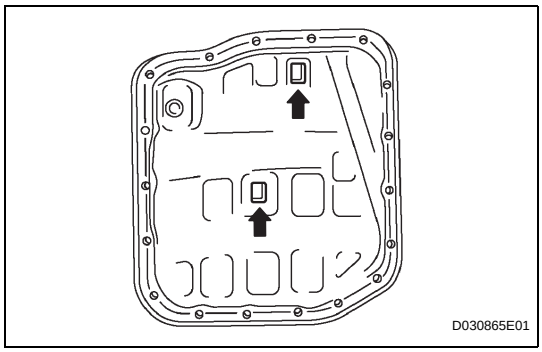

(b) Remove the 2 magnets from the oil pan.

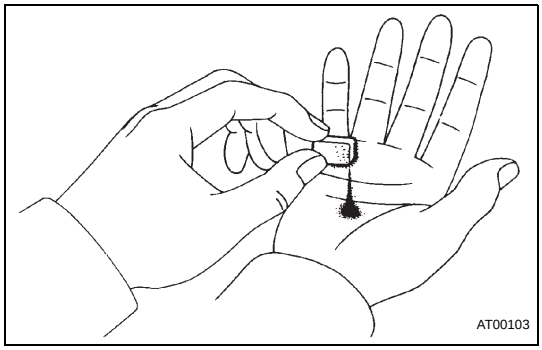

(c) Examine particles in the pan.

(1) Collect any steel chips with the removed magnets. Look carefully at the chips and particles in the pan and on the magnets to see the type of wear which might be found in the transaxle.

Steel (magnetic): bearing, gear and plate wear

Brass (non-magnetic): bearing wear

Result:

Steel (magnetic):

bearing, gear and plate wear

Brass (non-magnetic):

bearing wear

3. DISCONNECT TRANSMISSION WIRE

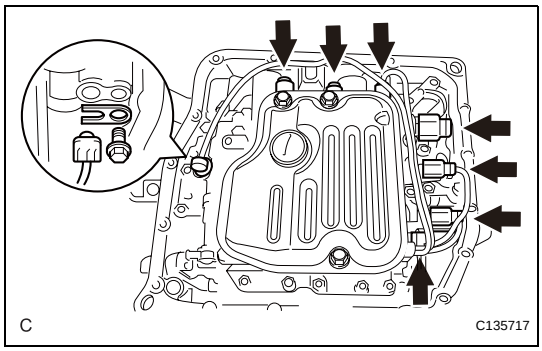

(a) Disconnect the 7 shift solenoid valve connectors.

(b) Remove the bolt and lock plate, and disconnect the ATF temperature sensor.

cardiagn.com

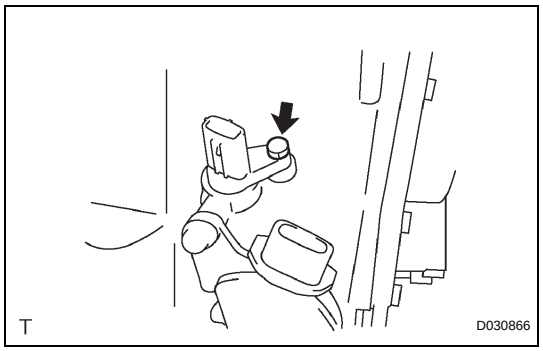

4. REMOVE TRANSMISSION WIRE

(a) Disconnect the transmission wire connector.

(b) Remove the bolt and transmission wire.

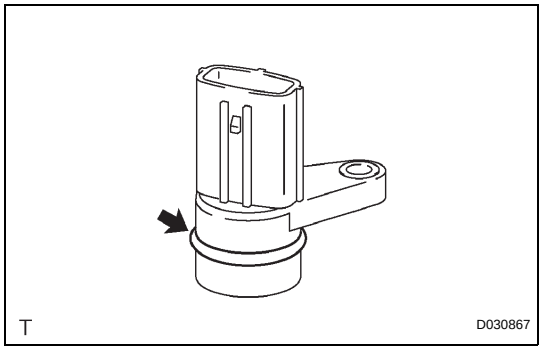

(c) Remove the O-ring from the transmission wire.

INSTALLATION

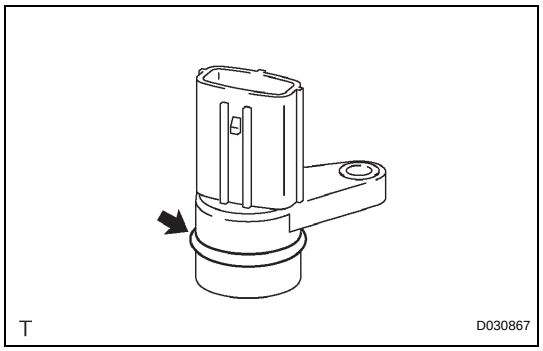

1. INSTALL TRANSMISSION WIRE

(a) Coat a new O-ring of the transmission wire connector with ATF WS and install it to the transmission wire.

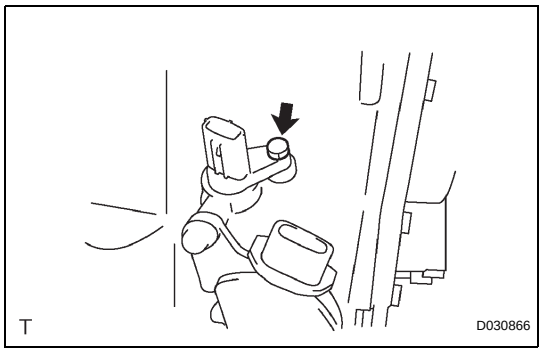

(b) Install the transmission wire with the bolt.
Torque: 5.4 N*m (55 kgf*cm, 48 in.*lbf)

(c) Connect the transmission wire connector.

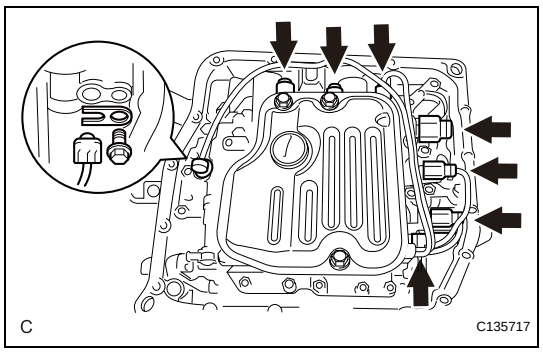

2. CONNECT TRANSMISSION WIRE

(a) Coat the O-ring of the ATF WS temperature sensor with ATF.

(b) Install the ATF temperature sensor with the lock plate and bolt.
Torque: 6.6 N*m (67 kgf*cm, 58 in.*lbf)

(c) Connect the 7 shift solenoid valve connectors.

cardiagn.com

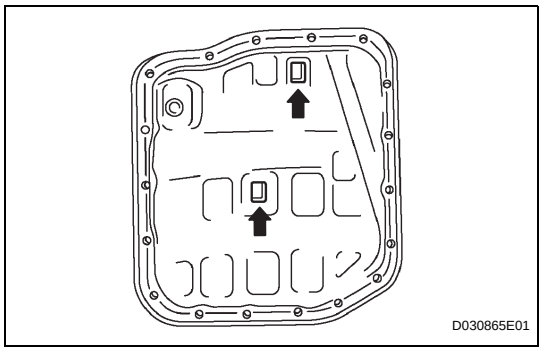

3. INSTALL AUTOMATIC TRANSAXLE OIL PAN SUB-ASSEMBLY

(a) Install the 2 magnets in the oil pan.

(b) Apply adhesive or equivalent to new 18 bolts.
Adhesive:
Toyota Genuine Adhesive 1344, Three Bond 1344 or Equivalent

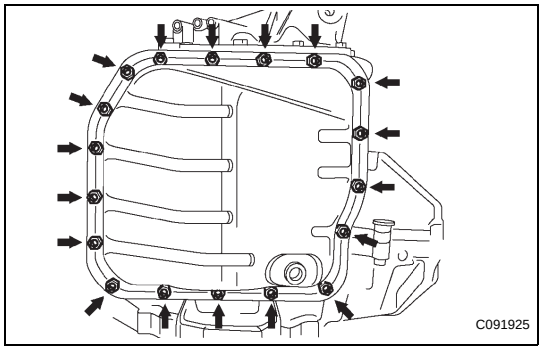

(c) Using a new gasket, install the oil pan to the transaxle case with the 18 bolts.
Torque: 7.8 N*m (80 kgf*cm, 69 in.*lbf)
NOTICE:
Since the bolts should be seal bolts, apply adhesive to the bolts and tighten them within 10 minutes of application.

4. INSTALL AUTOMATIC TRANSAXLE ASSEMBLY

HINT:
See page AX-168.

cardiagn.com

VALVE BODY ASSEMBLY

COMPONENTS

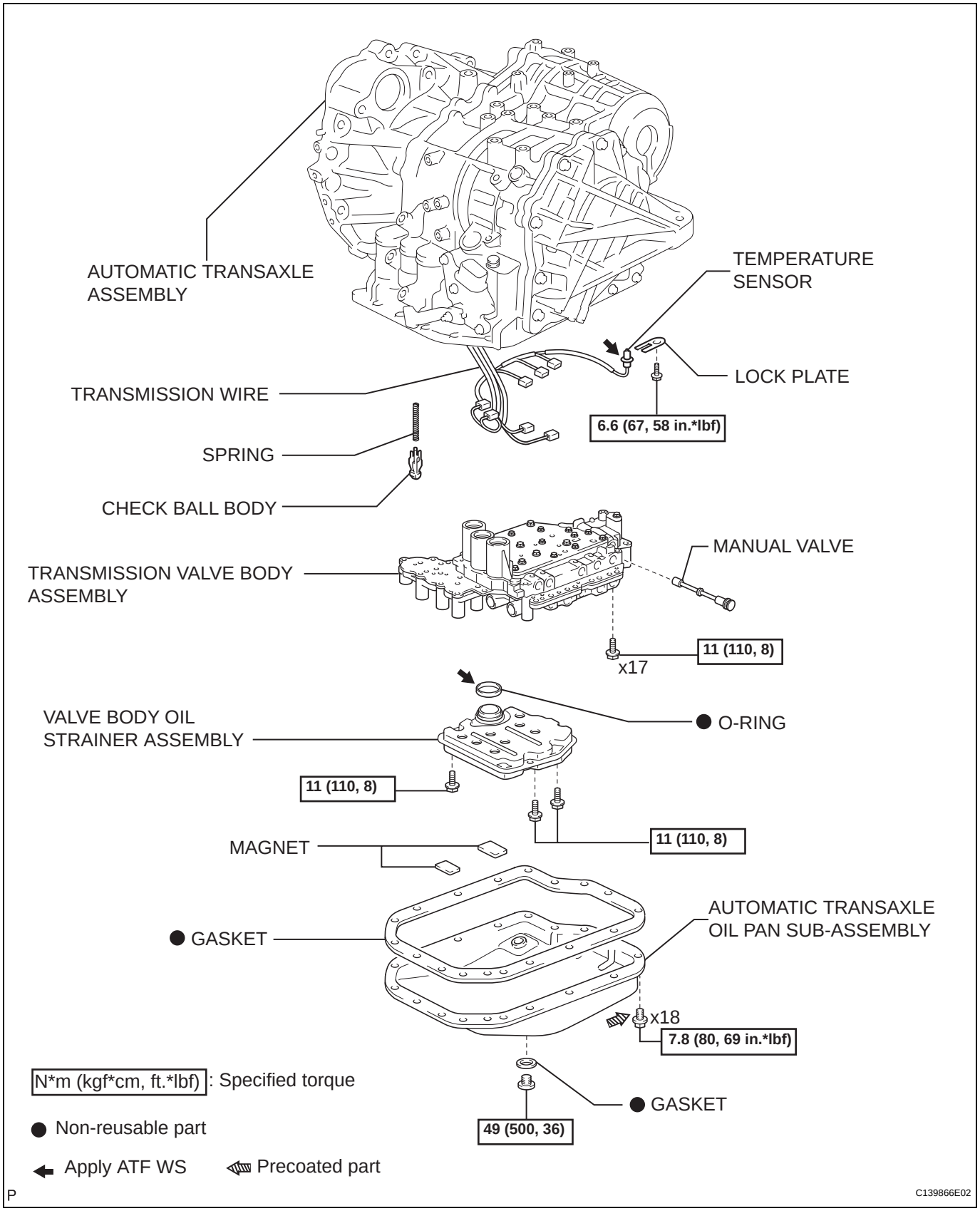

cardiagn.com

REMOVAL

1. REMOVE AUTOMATIC TRANSAXLE ASSEMBLY

HINT:

See page AX-162.

2. REMOVE AUTOMATIC TRANSAXLE OIL PAN SUB-ASSEMBLY

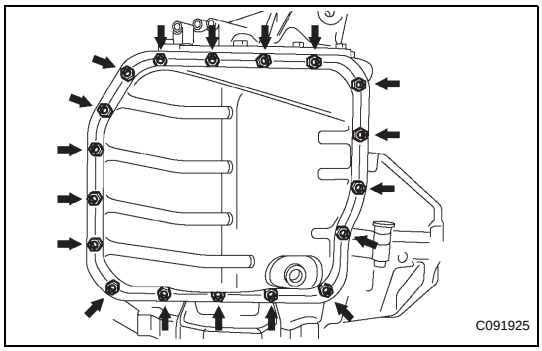

(a) Remove the 18 bolts, oil pan and gasket.

NOTICE:

Some fluid will remain in the oil pan. Remove all the pan bolts, and carefully remove the oil pan assembly.

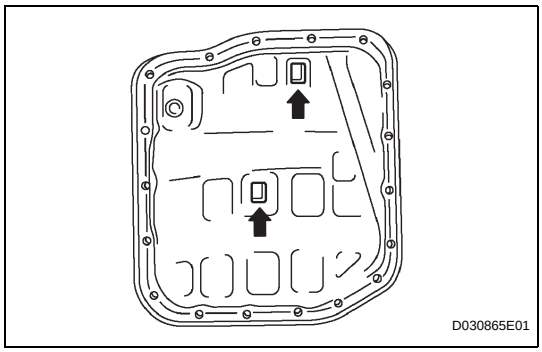

(b) Remove the 2 magnets from the oil pan.

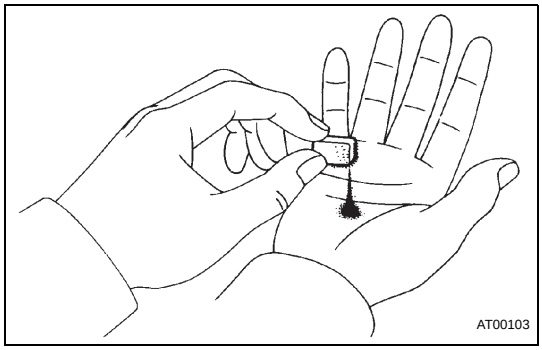

(c) Examine particles in the pan.

(1) Collect any steel chips with the removed magnets. Look carefully at the chips and particles in the pan and on the magnets to see the type of wear which might be found in the transaxle.

Result:

Steel (magnetic):
bearing, gear and plate wear

Brass (non-magnetic):
bearing wear

3. DISCONNECT TRANSMISSION WIRE

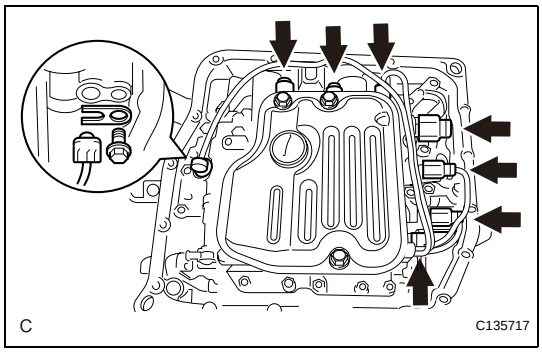

(a) Disconnect the 7 shift solenoid valve connectors.

(b) Remove the bolt and lock plate, and disconnect the ATF temperature sensor.

cardiagn.com

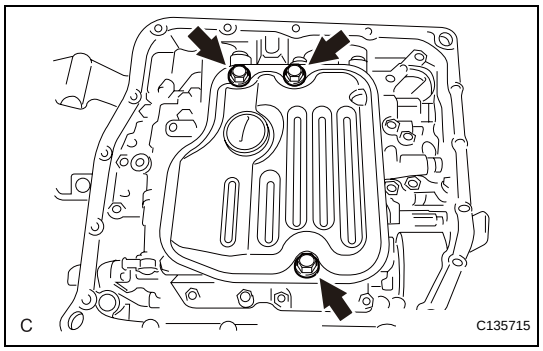

4. REMOVE VALVE BODY OIL STRAINER ASSEMBLY

(a) Remove the 3 bolts and oil strainer.

NOTICE:

Be careful that some fluid will come out of the oil strainer.

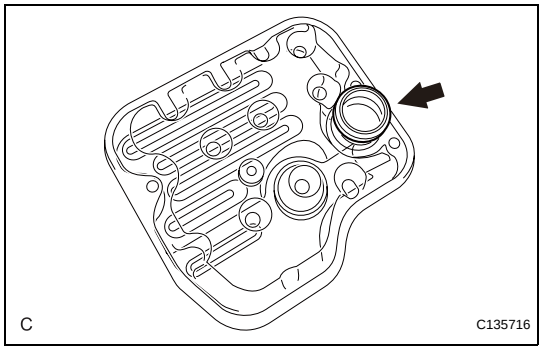

(b) Remove the O-ring from the oil strainer.

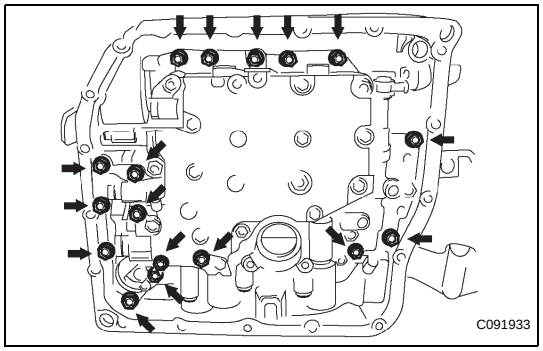

5. REMOVE TRANSMISSION VALVE BODY ASSEMBLY

(a) Support the valve body assembly and remove the 17 bolts and the valve body assembly.

NOTICE:

Be careful not to drop the check ball, spring and accumulator piston.

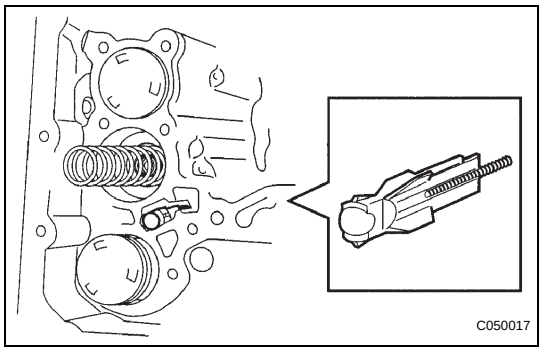

(b) Remove the check ball body and spring.

6. REMOVE MANUAL VALVE

(a) Remove the manual valve from the valve body assembly.

cardiagn.com

INSTALLATION

1. INSTALL MANUAL VALVE

(a) Install the manual valve to the valve body assembly.

2. INSTALL TRANSMISSION VALVE BODY ASSEMBLY

(a) Install the spring and check ball body.

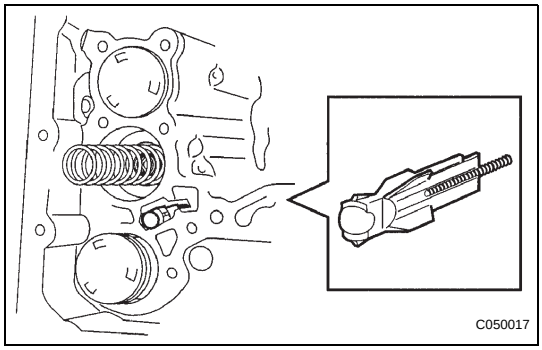

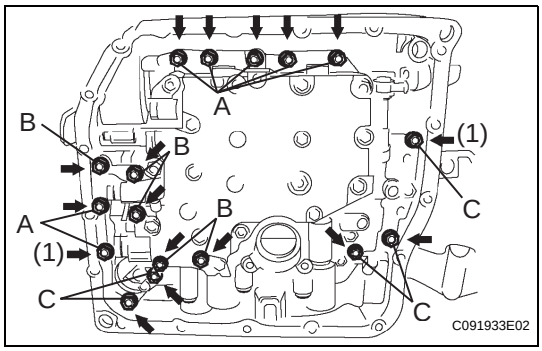

(b) Align the groove of the manual valve with the pin of the lever.

(c) Install the valve body with the 17 bolts.
Torque: 11 N*m (110 kgf*cm, 8 ft.*lbf)
NOTICE:
- **Push the valve body against the accumulator piston spring and the check ball body to install it.**
- **First, temporarily tighten the bolts marked by (1) in the illustration because they are positioning bolts.**

Bolt length:
Bolt A: 25 mm (0.984 in.)
Bolt B: 57 mm (2.244 in.)
Bolt C: 41 mm (1.614 in.)

3. INSTALL VALVE BODY OIL STRAINER ASSEMBLY

(a) Coat a new O-ring with ATF WS.

(b) Install the O-ring to the oil strainer.

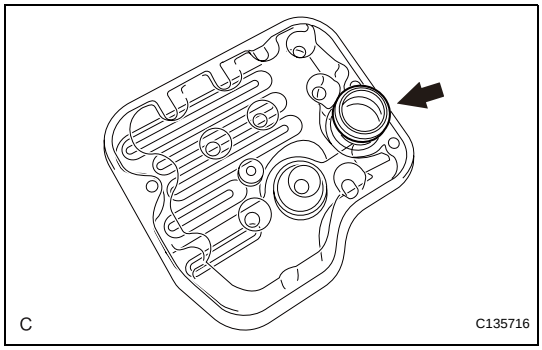

(c) Install the oil strainer with the 3 bolts.
Torque: 11 N*m (110 kgf*cm, 8 ft.*lbf)

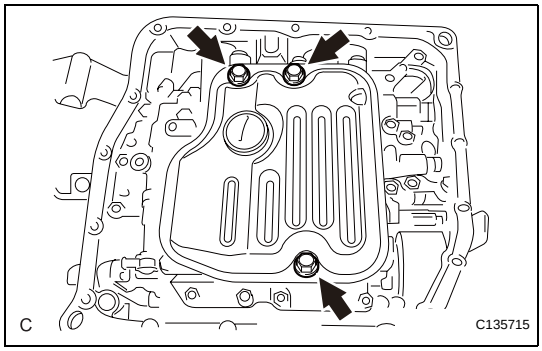

cardiagn.com

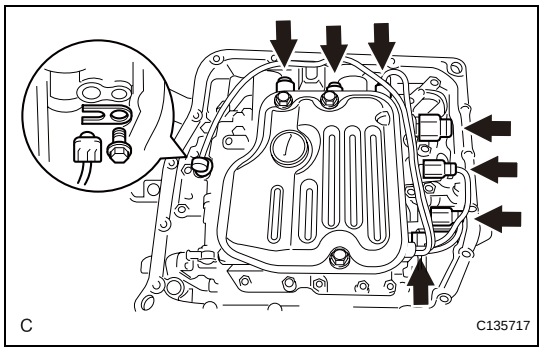

4. INSTALL TRANSMISSION WIRE

(a) Coat the O-ring with ATF WS.

(b) Install the ATF temperature sensor with the lock plate and bolt.
Torque: 6.6 N*m (67 kgf*cm, 58 in.*lbf)

(c) Connect the 7 shift solenoid valve connectors.

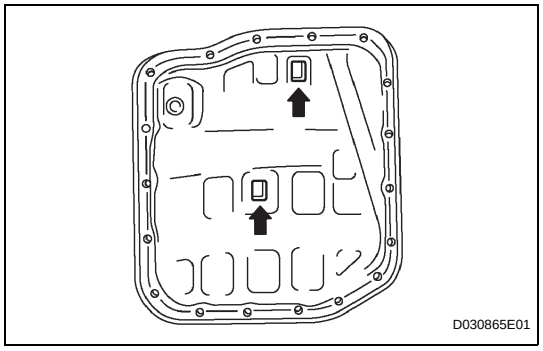

5. INSTALL AUTOMATIC TRANSAXLE OIL PAN SUB-ASSEMBLY

(a) Install the 2 magnets in the oil pan.

(b) Apply adhesive or equivalent to new 18 bolts.
Adhesive:
Toyota Genuine Adhesive 1344, Three Bond 1344 or Equivalent

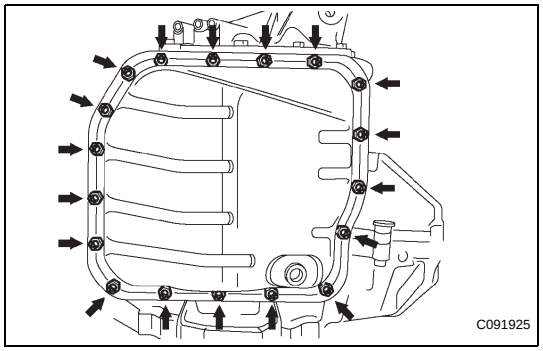

(c) Using a new gasket, install the oil pan to the transaxle case with the 18 bolts.
Torque: 7.8 N*m (80 kgf*cm, 69 in.*lbf)
NOTICE:
Since the bolts should be seal bolts, apply adhesive to the bolts and tighten them within 10 minutes of application.

6. CONNECT CABLE TO NEGATIVE BATTERY TERMINAL
Torque: 6.9 N*m (70 kgf*cm, 61 in.*lbf)

7. INSTALL AUTOMATIC TRANSAXLE ASSEMBLY
HINT:
See page AX-168.

cardiagn.com

SHIFT LOCK SYSTEM

ON-VEHICLE INSPECTION

1. CHECK SHIFT LOCK OPERATION

(a) Move the shift lever to the P position.
(b) Turn the ignition switch to the LOCK position.
(c) Check that the shift lever cannot be moved to any position other than P.
(d) Turn the ignition switch to the on position, depress the brake pedal and check that the shift lever can be moved to another position. If operation cannot be done as specified, inspect the shift lock control unit.

2. CHECK SHIFT LOCK RELEASE BUTTON OPERATION

(a) Using a screwdriver, remove the shift lock release cover.
(b) When operating the shift lever with the shift lock release button pressed, check that the lever can be moved to any position other than P.
If operation cannot be done as specified, check the shift lever assembly installation condition.

3. CHECK KEY INTERLOCK OPERATION

(a) Turn the ignition switch to the ON position.
(b) Depress the brake pedal and move the shift lever to any position other than P.
(c) Check that the ignition key cannot be turned to the LOCK position.
(d) Move the shift lever to the P position, turn the ignition key to the LOCK position and check that the ignition key can be removed.
If operation cannot be done as specified, inspect the shift lock control unit.

4. INSPECT SHIFT LOCK CONTROL ECU

(a) Measure the voltage according to the value(s) in the table below.
HINT:
Do not disconnect the shift lock control ECU connector.

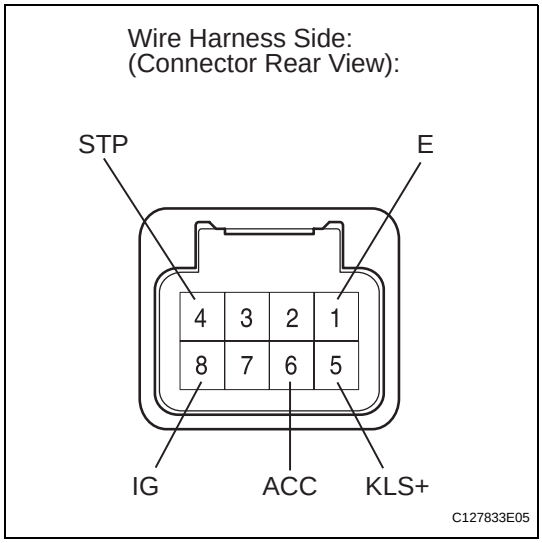

Standard voltage

Terminal	Measuring Condition	Voltage (V)
6 (ACC) - 1 (E)	Ignition switch ON	10 to 14
6 (ACC) - 1 (E)	Ignition switch ACC	10 to 14

cardiagn.com

Terminal	Measuring Condition	Voltage (V)
6 (ACC) - 1 (E)	Ignition switch OFF	Below 1
4 (STP) - 1 (E)	Depress brake pedal	10 to 14
4 (STP) - 1 (E)	Release brake pedal	Below 1
5 (KLS+) - 1 (E)	1. Ignition switch ACC and shift lever P position 2. Ignition switch ACC and shift lever except P position 3. Ignition switch ACC and shift lever P position (After approx. 1 second)	7.5 to 11 Below 1 6 to 9
8 (IG) - 1 (E)	Ignition switch ON	10 to 14
8 (IG) - 1 (E)	Ignition switch OFF	Below 1

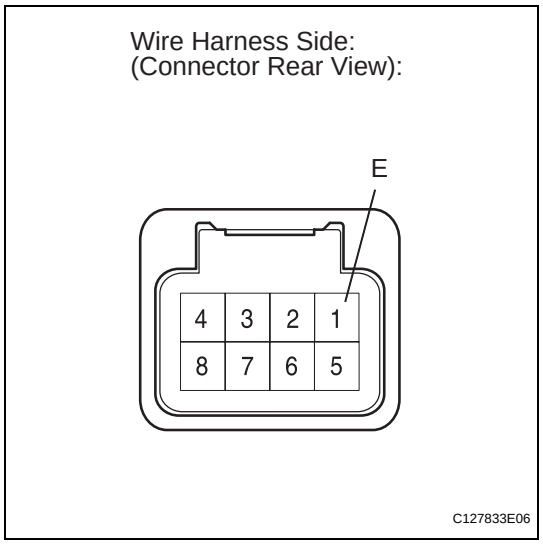

(b) Measure the resistance according to the value(s) in the table below.
HINT:
Do not disconnect the shift lock control ECU connector.
If the result is not as specified, replace the shift lock control ECU.

Standard resistance

Terminal	Measuring Condition	Specified Value
1 (E) - Body ground	Always	Below 1 Ω

cardiagn.com

TRANSMISSION CONTROL CABLE ASSEMBLY

COMPONENTS

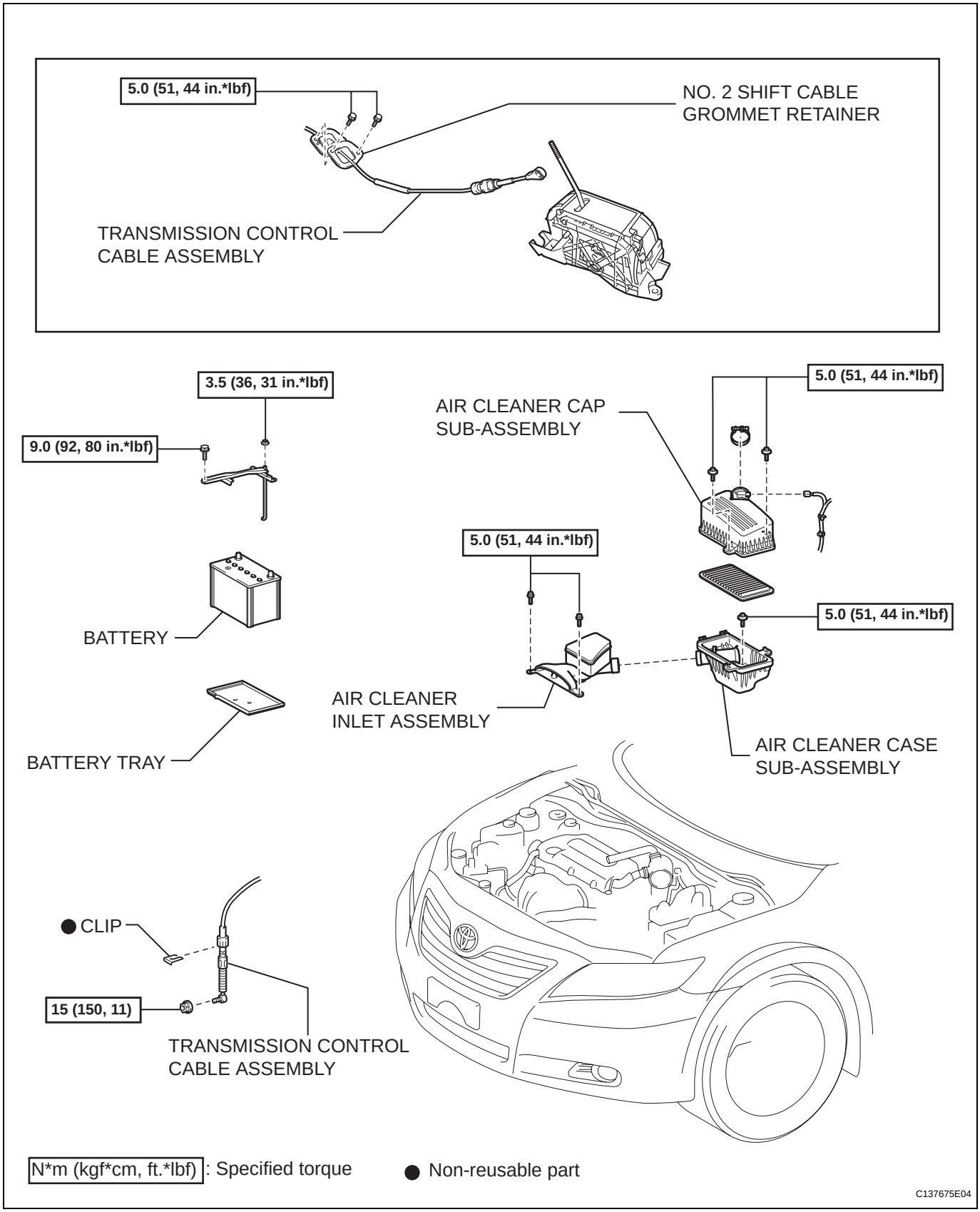

cardiagn.com

REMOVAL

1. **REMOVE AIR CONDITIONING UNIT**
   HINT:
   See page AC-151.

2. **REMOVE BATTERY (See page EM-95)**

3. **REMOVE AIR CLEANER INLET ASSEMBLY (See page EM-94)**

4. **REMOVE AIR CLEANER CAP SUB-ASSEMBLY (See page ES-416)**

5. **REMOVE AIR CLEANER CASE SUB-ASSEMBLY (See page EM-95)**

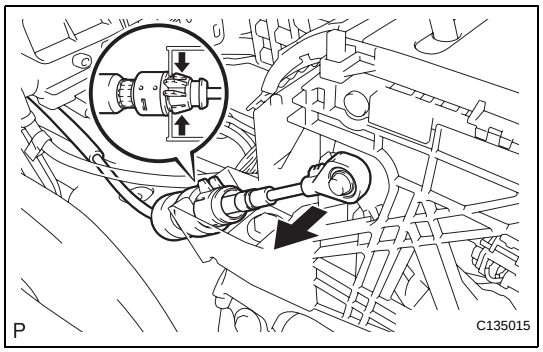

6. **DISCONNECT NO. 2 SHIFT CABLE GROMMET RETAINER**
   (a) Disconnect the transmission control cable assembly from the transmission floor shift assembly while pushing the 2 claws of the floor shift cable.
   (b) Turn back the carpet.

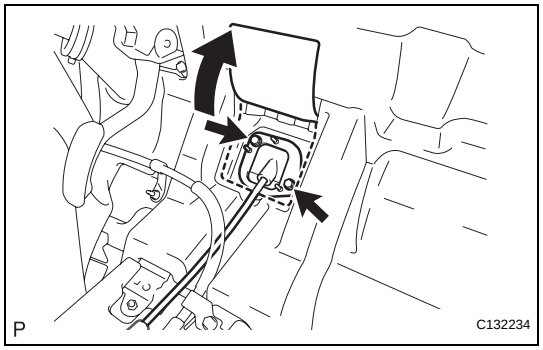

   (c) Remove the 2 bolts and disconnect the No. 2 shift cable grommet retainer.
   (d) Remove the No. 2 shift cable grommet retainer.

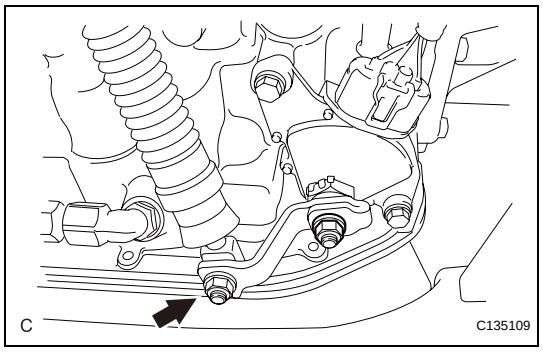

7. **REMOVE TRANSMISSION CONTROL CABLE ASSEMBLY**
   (a) Remove the nut from the control shaft lever.
   (b) Disconnect the transmission control cable assembly from the control shaft lever.

cardiagn.com

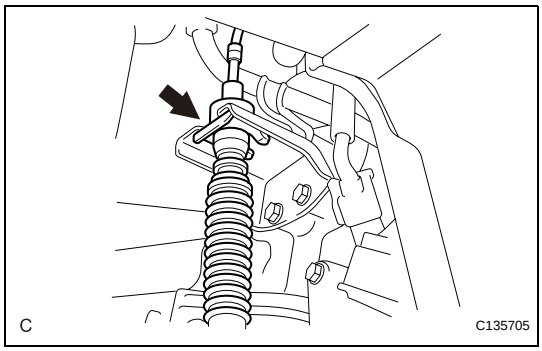

(c) Remove the clip and disconnect the transmission control cable assembly from the No. 1 control cable bracket.

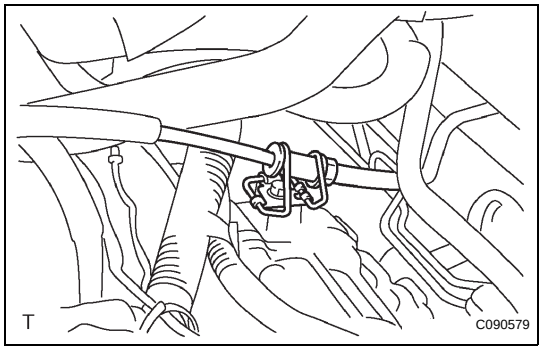

(d) Disconnect the transmission control cable assembly from the control cable clamp.

(e) Pull out the transmission control cable assembly from the body.

cardiagn.com

ADJUSTMENT

1. INSPECT SHIFT LEVER POSITION

(a) When shifting from the P to the R position with the ignition switch on and brake pedal depressed, make sure that the shift lever moves smoothly and moves correctly into position.

(b) Start the engine and make sure that the vehicle moves forward when shifting from the N to the D position and moves rearward when shifting to the R position.
If operation cannot be done as specified, inspect the park/neutral position switch assembly and check the shift lever assembly installation condition.

2. ADJUST SHIFT LEVER POSITION

(a) Move the shift lever to the N position.

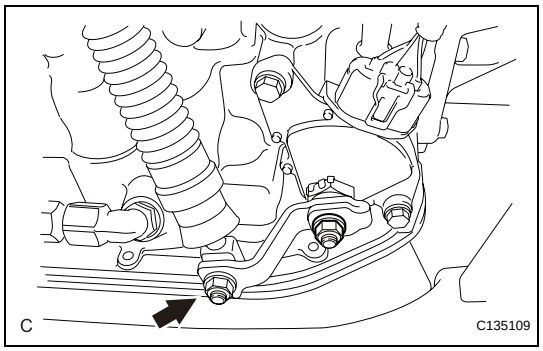

(b) Remove the nut from the control shaft lever.

(c) Disconnect the transmission control cable assembly from the control shaft lever.

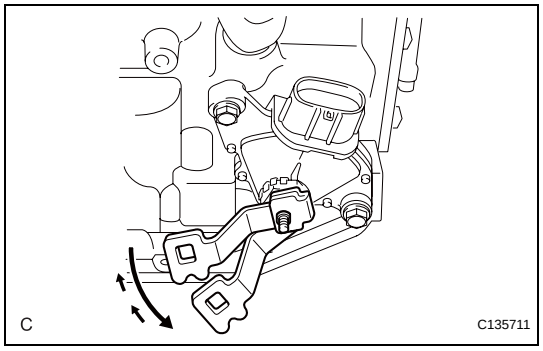

(d) Push the control shaft fully downward.

(e) Return the control shaft lever 2 notches to the N position.

cardiagn.com

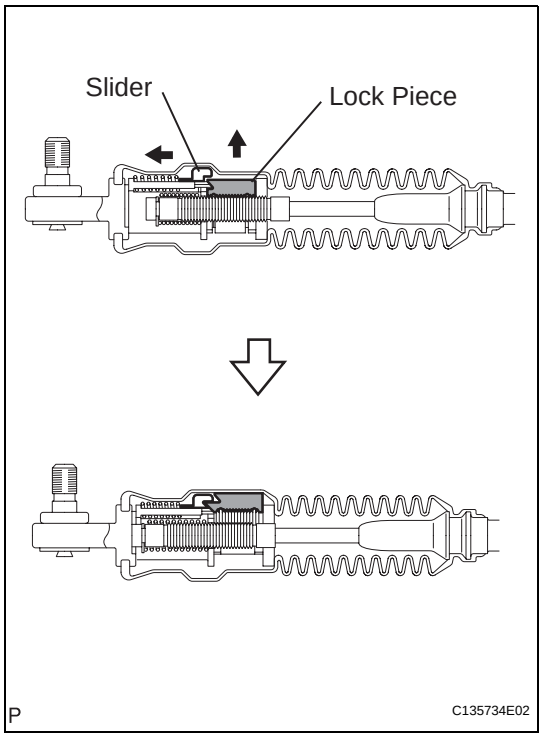

(f) Move the slider in the directions indicated by the arrows and pull up the lock piece.
NOTICE:
Do not damage the boot.

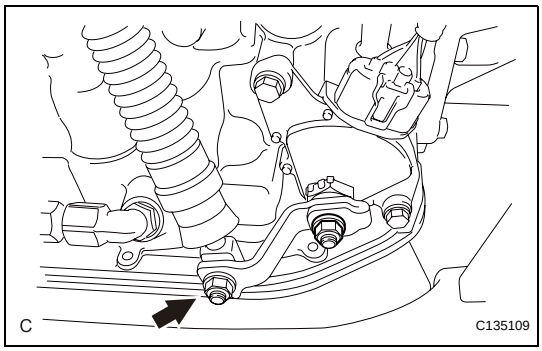

(g) Install the transmission control cable to the control shaft lever with the nut.
Torque: 15 N*m (150 kgf*cm, 11 ft.*lbf)
NOTICE:
- **If the control cable end is excessively pushed up, the shift lever cannot be adjusted.**
- **When tightening the nut, confirm that the control cable is properly stretched.**

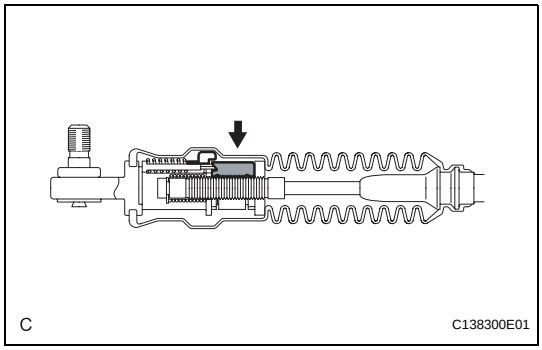

(h) Push in the lock piece.
NOTICE:
Firmly push in the lock piece until the slider lock is engaged.

(i) Start the engine and make sure that the vehicle moves forward when moving the lever from the N to the D position and moves rearward when moving it to the R position.
If it becomes hard to move the shift lever, readjust the shift lever position.

cardiagn.com

INSTALLATION

1. INSTALL NO. 2 SHIFT CABLE GROMMET RETAINER

(a) Pass the transmission control cable assembly from the cabin to the engine compartment.

(b) Install the No. 2 shift cable grommet retainer to the transmission control cable assembly.

(c) Install the No. 2 shift cable grommet retainer with the 2 bolts.
Torque: 5.0 N*m (51 kgf*cm, 44 in.*lbf)

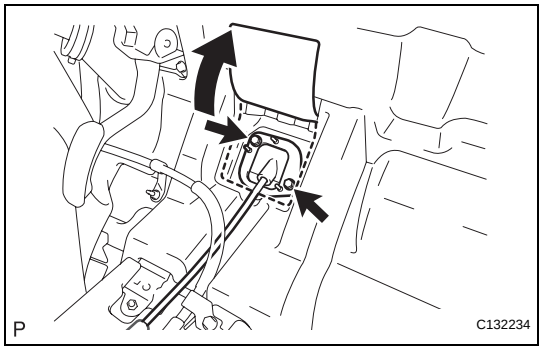

2. INSTALL TRANSMISSION CONTROL CABLE ASSEMBLY

(a) Install the transmission control cable assembly as shown in the illustration.
HINT:
- Install the floor shift cable with the uneven surface facing up.
- Securely engage the claws of the floor shift cable.

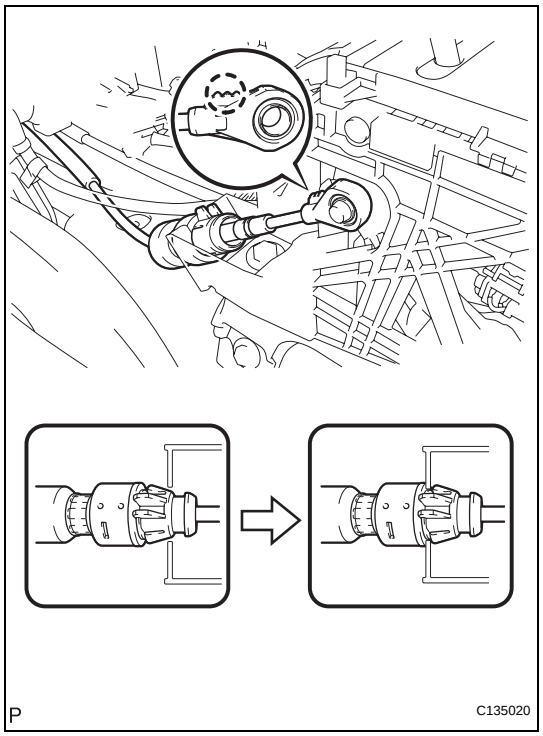

(b) Connect the control cable to the control cable clamp.

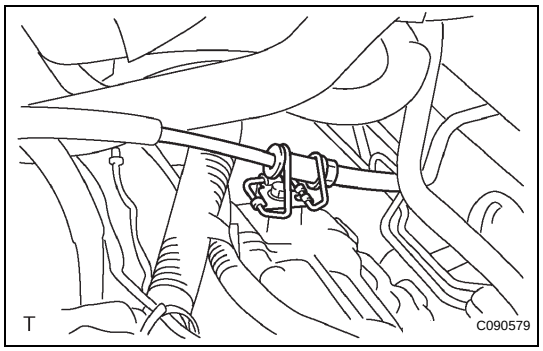

cardiagn.com

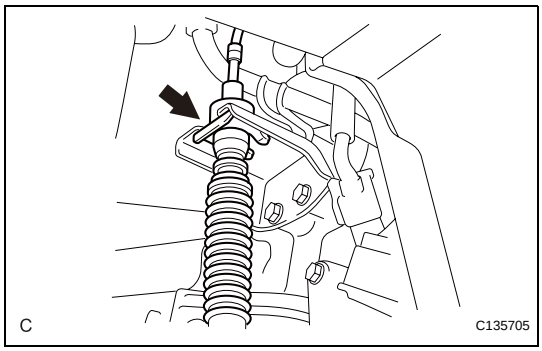

(c) Connect the control cable to the bracket with a new clip.

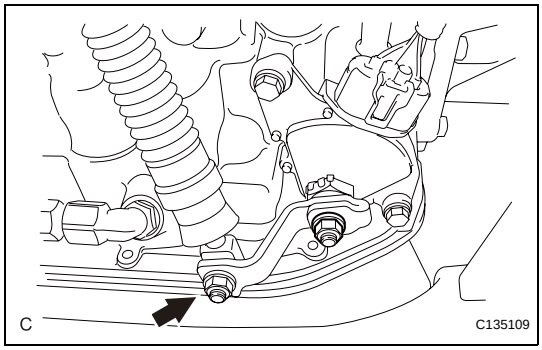

(d) Install the transmission control cable to the control shaft lever with the nut.
Torque: 15 N*m (150 kgf*cm, 11 ft.*lbf)

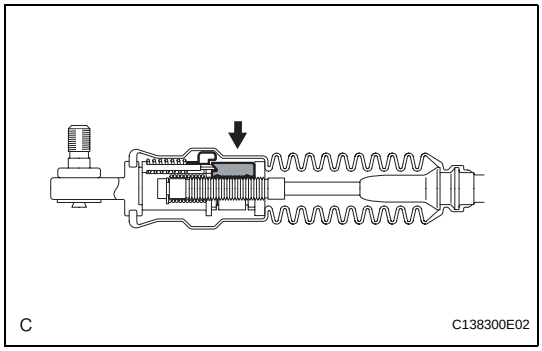

(e) Push in the lock piece of the transmission control cable.
NOTICE:
Firmly push in the lock piece until the slider lock is engaged.
HINT:
After pushing in the lock piece, make sure that the boot is not deformed.

3. **INSTALL AIR CLEANER CASE SUB-ASSEMBLY (See page EM-120)**
4. **INSTALL AIR CLEANER CAP SUB-ASSEMBLY (See page ES-419)**
5. **INSTALL AIR CLEANER INLET ASSEMBLY (See page EM-120)**
6. **INSTALL BATTERY (See page EM-119)**
7. **INSTALL AIR CONDITIONING UNIT**
HINT:
See page AC-173.
8. **INSPECT SHIFT LEVER POSITION (See page AX-146)**
9. **ADJUST SHIFT LEVER POSITION (See page AX-146)**

cardiagn.com

DIFFERENTIAL OIL SEAL

COMPONENTS

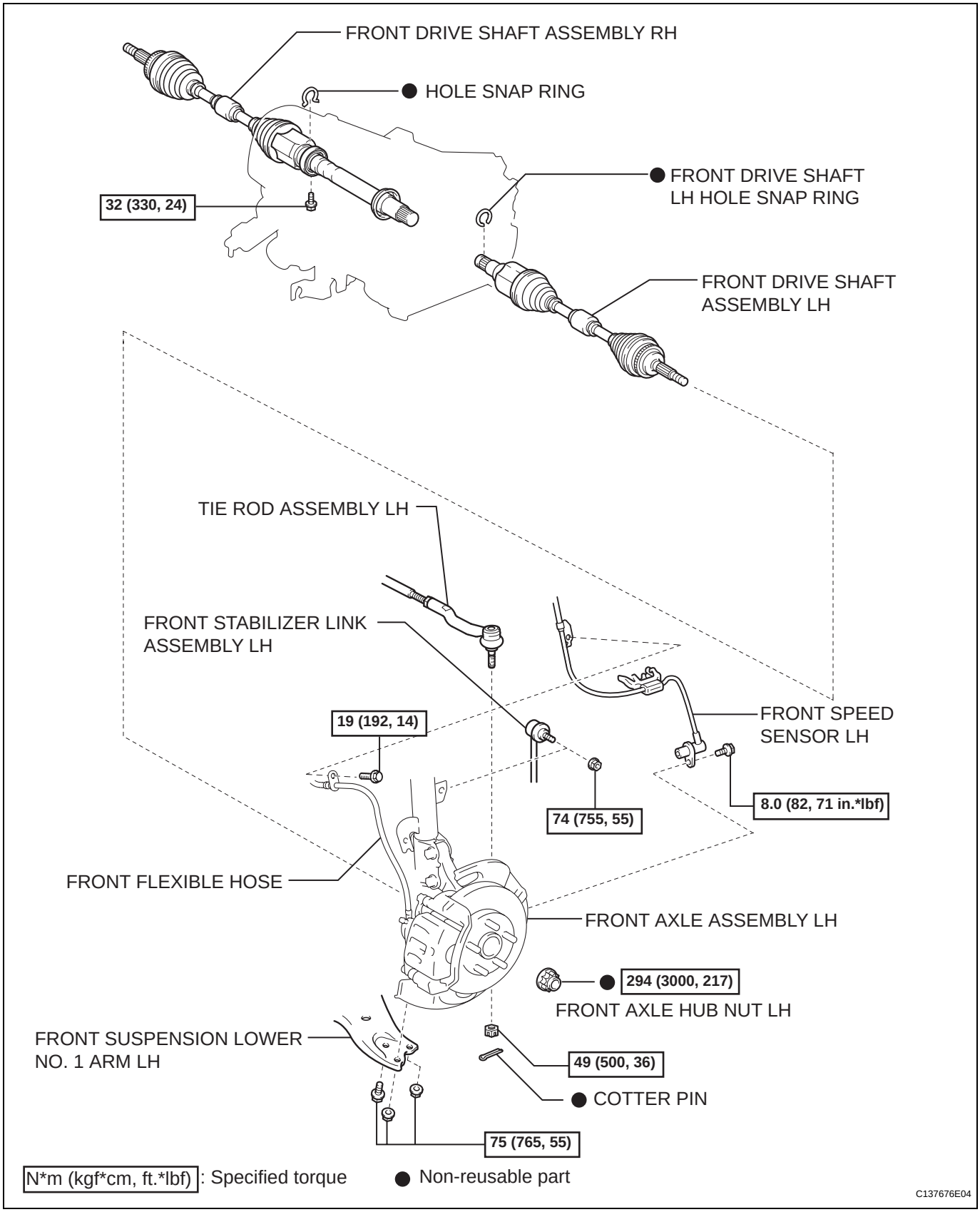

cardiagn.com

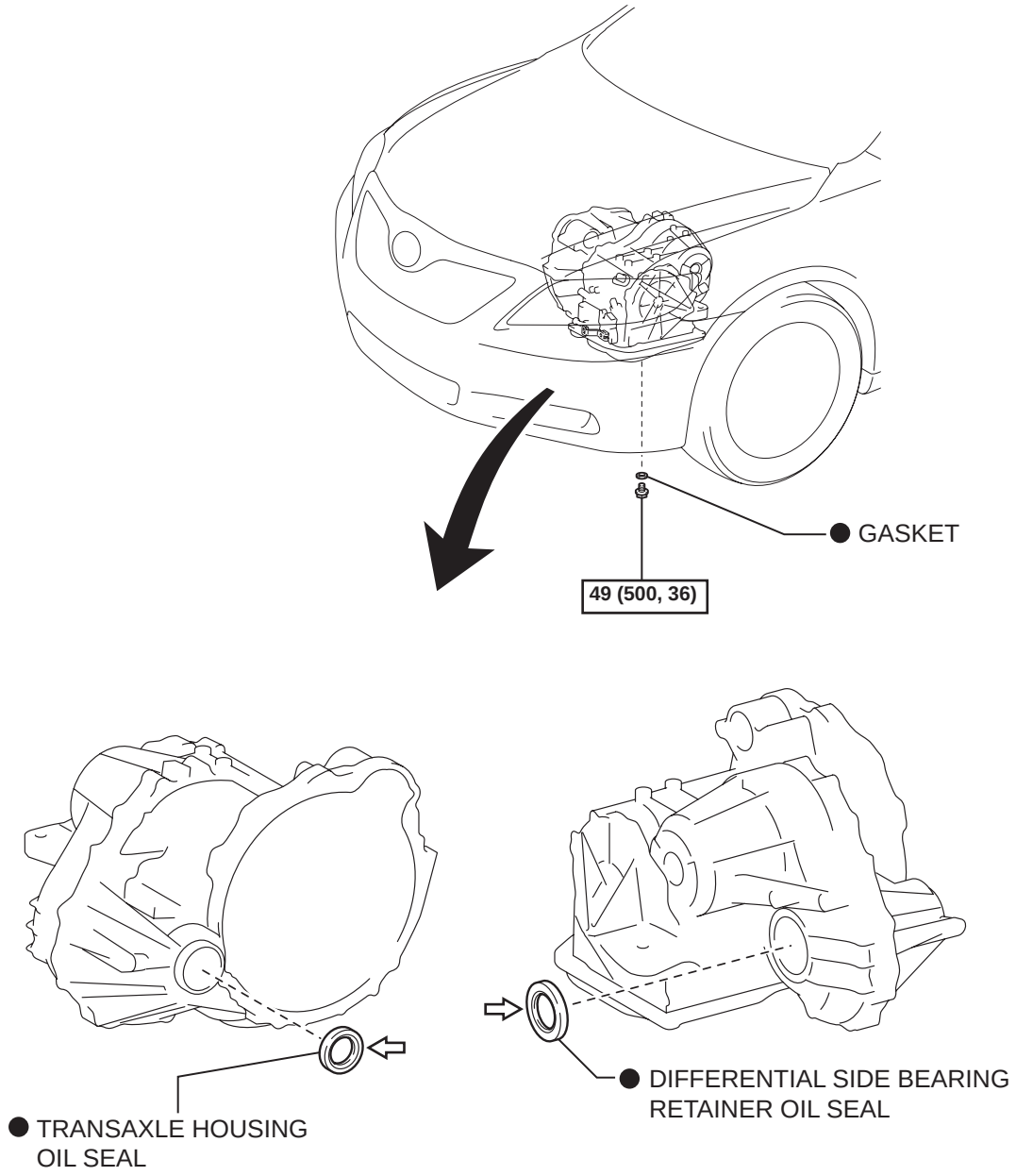

N*m (kgf*cm, ft.*lbf) : Specified torque ⇦ Apply MP grease ● Non-reusable part

C135731E04

cardiagn.com

REMOVAL

1. **DRAIN AUTOMATIC TRANSAXLE FLUID (See page AX-162)**
2. **REMOVE FRONT WHEEL**
3. **REMOVE FRONT AXLE HUB NUT LH (See page DS-7)**
4. **REMOVE FRONT AXLE HUB NUT RH**
   HINT:
   Use the same procedures described for the LH side.
5. **SEPARATE FRONT STABILIZER LINK ASSEMBLY LH (See page DS-7)**
6. **SEPARATE FRONT STABILIZER LINK ASSEMBLY RH**
   HINT:
   Use the same procedures described for the LH side.
7. **SEPARATE FRONT SPEED SENSOR LH (See page DS-7)**
8. **SEPARATE FRONT SPEED SENSOR RH**
9. **SEPARATE TIE ROD ASSEMBLY LH (See page DS-8)**
10. **SEPARATE TIE ROD ASSEMBLY RH**
    HINT:
    Use the same procedures described for the LH side.
11. **SEPARATE FRONT SUSPENSION LOWER NO. 1 ARM LH (See page DS-8)**
12. **SEPARATE FRONT SUSPENSION LOWER NO. 1 ARM RH**
    HINT:
    Use the same procedures described for the LH side.
13. **SEPARATE FRONT AXLE ASSEMBLY LH (See page DS-8)**
14. **SEPARATE FRONT AXLE ASSEMBLY RH**
    HINT:
    Use the same procedures described for the LH side.
15. **REMOVE FRONT DRIVE SHAFT ASSEMBLY LH (See page DS-9)**
16. **REMOVE FRONT DRIVE SHAFT ASSEMBLY RH (See page DS-9)**
17. **FIX FRONT AXLE ASSEMBLY LH (See page DS-9)**
18. **FIX FRONT AXLE ASSEMBLY RH**
    HINT:
    Use the same procedures described for the LH side.

cardiagn.com

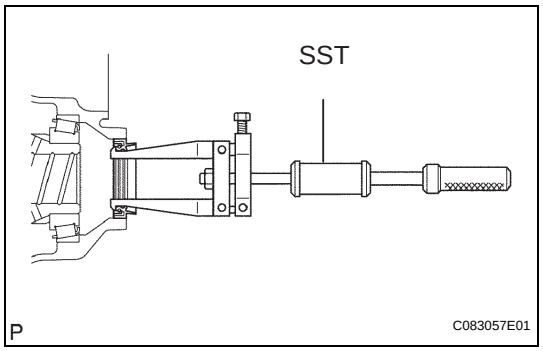

19. REMOVE TRANSAXLE HOUSING OIL SEAL

(a) Using SST, pull out the oil seal.
SST 09308-00010

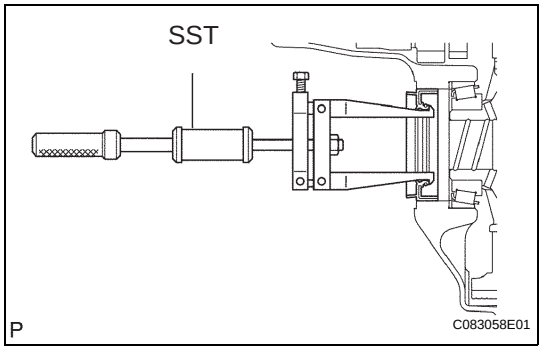

20. REMOVE DIFFERENTIAL SIDE BEARING RETAINER OIL SEAL

(a) Using SST, pull out the oil seal.
SST 09308-00010

INSTALLATION

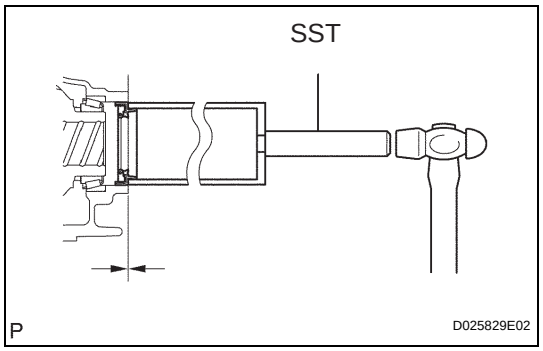

1. INSTALL TRANSAXLE HOUSING OIL SEAL

(a) Using SST and a hammer, install a new oil seal.
SST 09316-60011 (09316-00011)
Oil seal installation depth:
-0.5 to 0.5 mm (-0.020 to 0.020 in.)

(b) Coat the lip of the oil seal with MP grease.

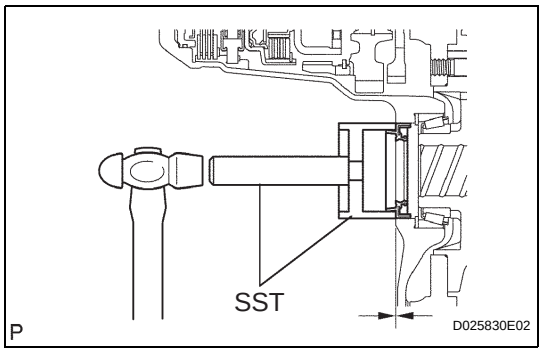

2. INSTALL DIFFERENTIAL SIDE BEARING RETAINER OIL SEAL

(a) Using SST and a hammer, install a new oil seal.
SST 09649-17010, 09950-70010 (09951-07150)
Oil seal installation depth:
-0.5 to 0.5 mm (-0.020 to 0.020 in.)

(b) Coat the lip of the oil seal with MP grease.

3. INSTALL FRONT DRIVE SHAFT ASSEMBLY LH (See page DS-20)

4. INSTALL FRONT DRIVE SHAFT ASSEMBLY RH (See page DS-21)

5. INSTALL FRONT AXLE ASSEMBLY LH (See page DS-21)

6. INSTALL FRONT AXLE ASSEMBLY RH

HINT:
Use the same procedures described for the LH side.

7. INSTALL FRONT SUSPENSION LOWER NO. 1 ARM LH (See page DS-21)

cardiagn.com

8. **INSTALL FRONT SUSPENSION LOWER NO. 1 ARM RH**
   HINT:
   Use the same procedures described for the LH side.
9. **INSTALL TIE ROD ASSEMBLY LH (See page DS-21)**
10. **INSTALL TIE ROD ASSEMBLY RH**
    HINT:
    Use the same procedures described for the LH side.
11. **INSTALL FRONT SPEED SENSOR LH (See page DS-21)**
12. **INSTALL FRONT SPEED SENSOR RH**
    HINT:
    Use the same procedures described for the LH side.
13. **INSTALL FRONT STABILIZER LINK ASSEMBLY LH (See page DS-22)**
14. **INSTALL FRONT STABILIZER LINK ASSEMBLY RH**
    HINT:
    Use the same procedures described for the LH side.
15. **INSTALL FRONT AXLE HUB NUT LH (See page DS-22)**
16. **INSTALL FRONT AXLE HUB NUT RH**
    HINT:
    Use the same procedures described for the LH side.
17. **INSTALL FRONT WHEEL (See page DS-22)**
18. **ADD AUTOMATIC TRANSAXLE FLUID (See page AX-175)**
19. **INSPECT AUTOMATIC TRANSAXLE FLUID (See page AX-123)**
20. **INSPECT AND ADJUST FRONT WHEEL ALIGNMENT**
    See page SP-4.
21. **CHECK ABS SPEED SENSOR SIGNAL**
    HINT:
    See page BC-11.

cardiagn.com

AUTOMATIC TRANSAXLE ASSEMBLY

COMPONENTS

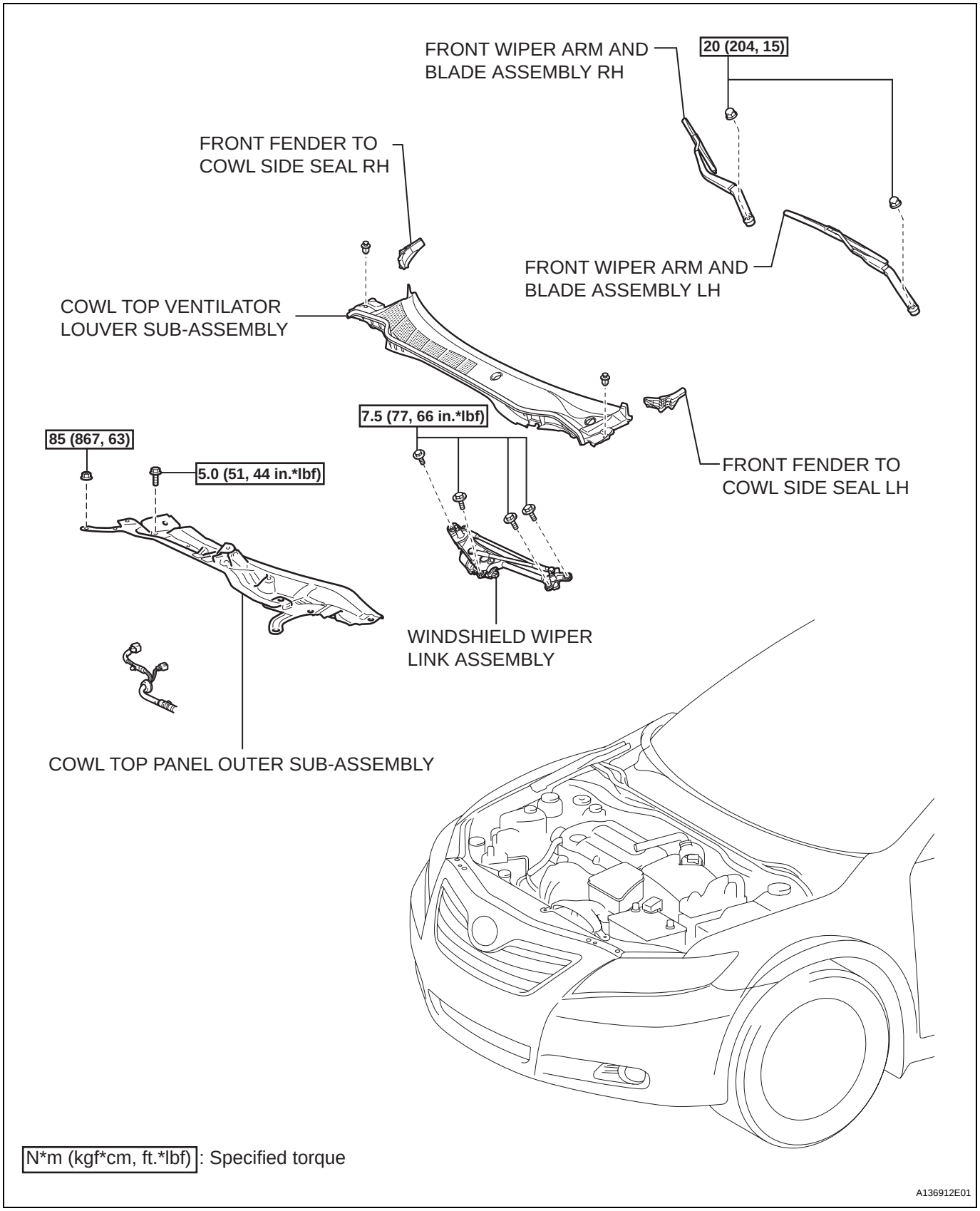

cardiagn.com

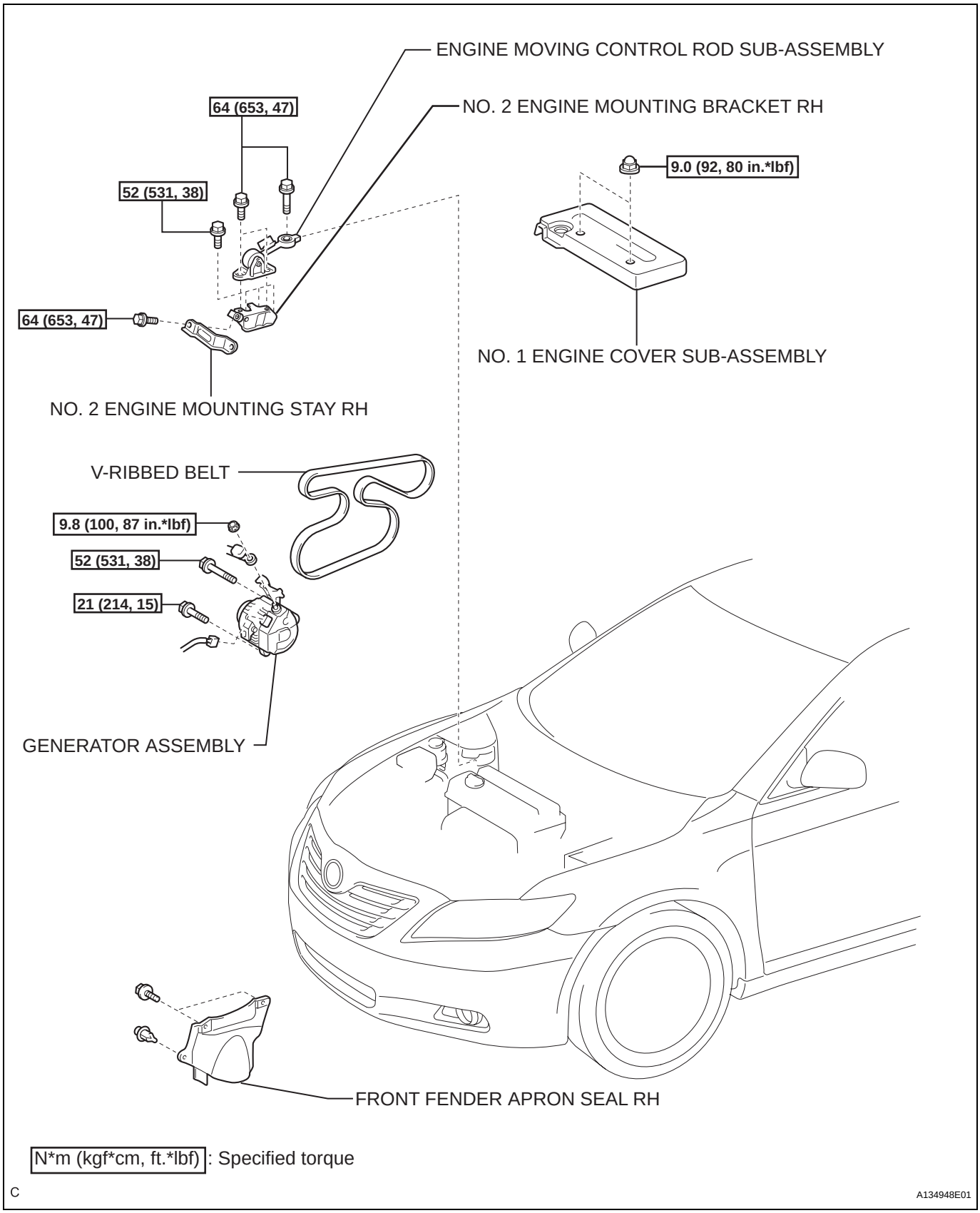

cardiagn.com

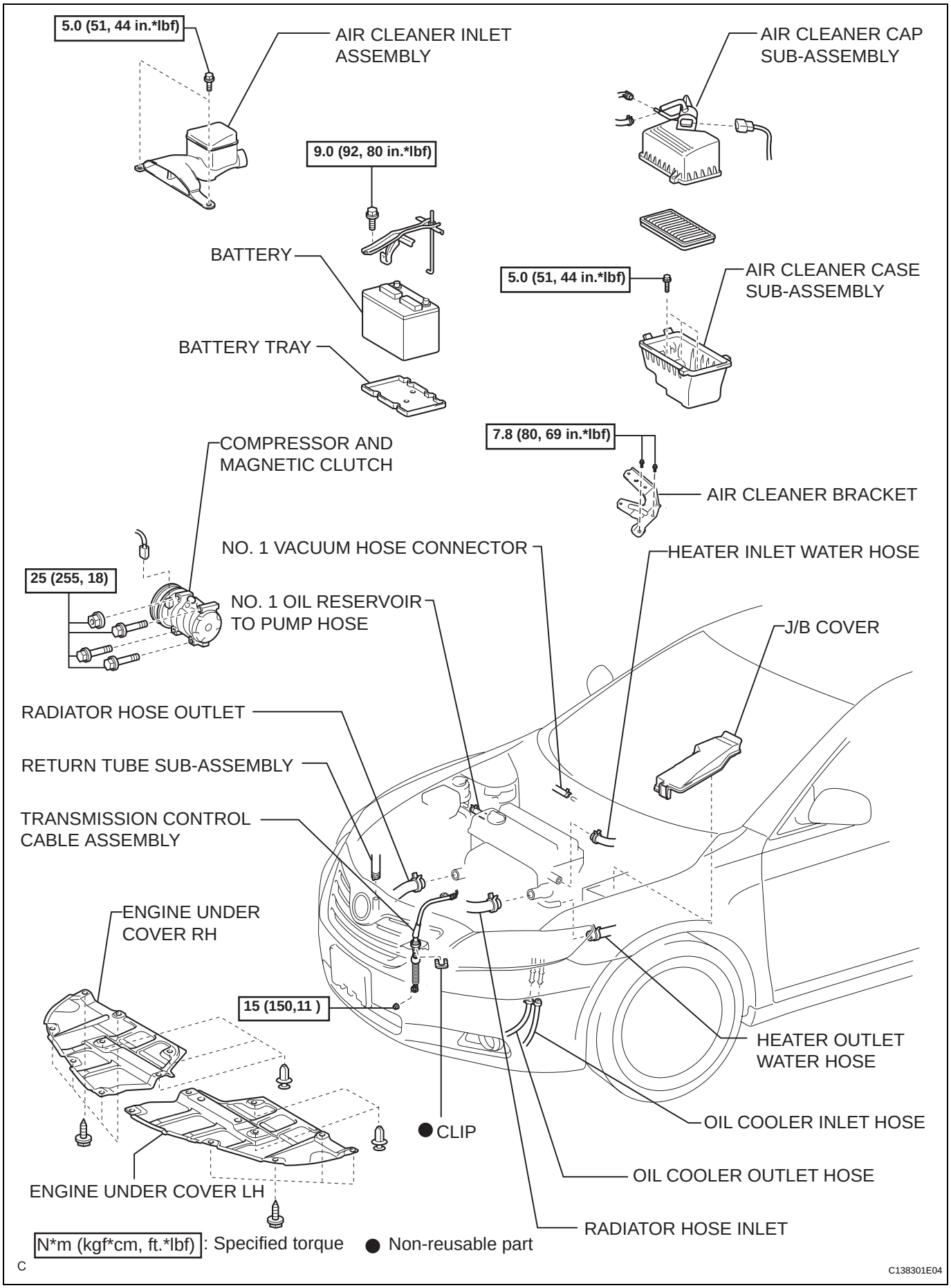

cardiagn.com

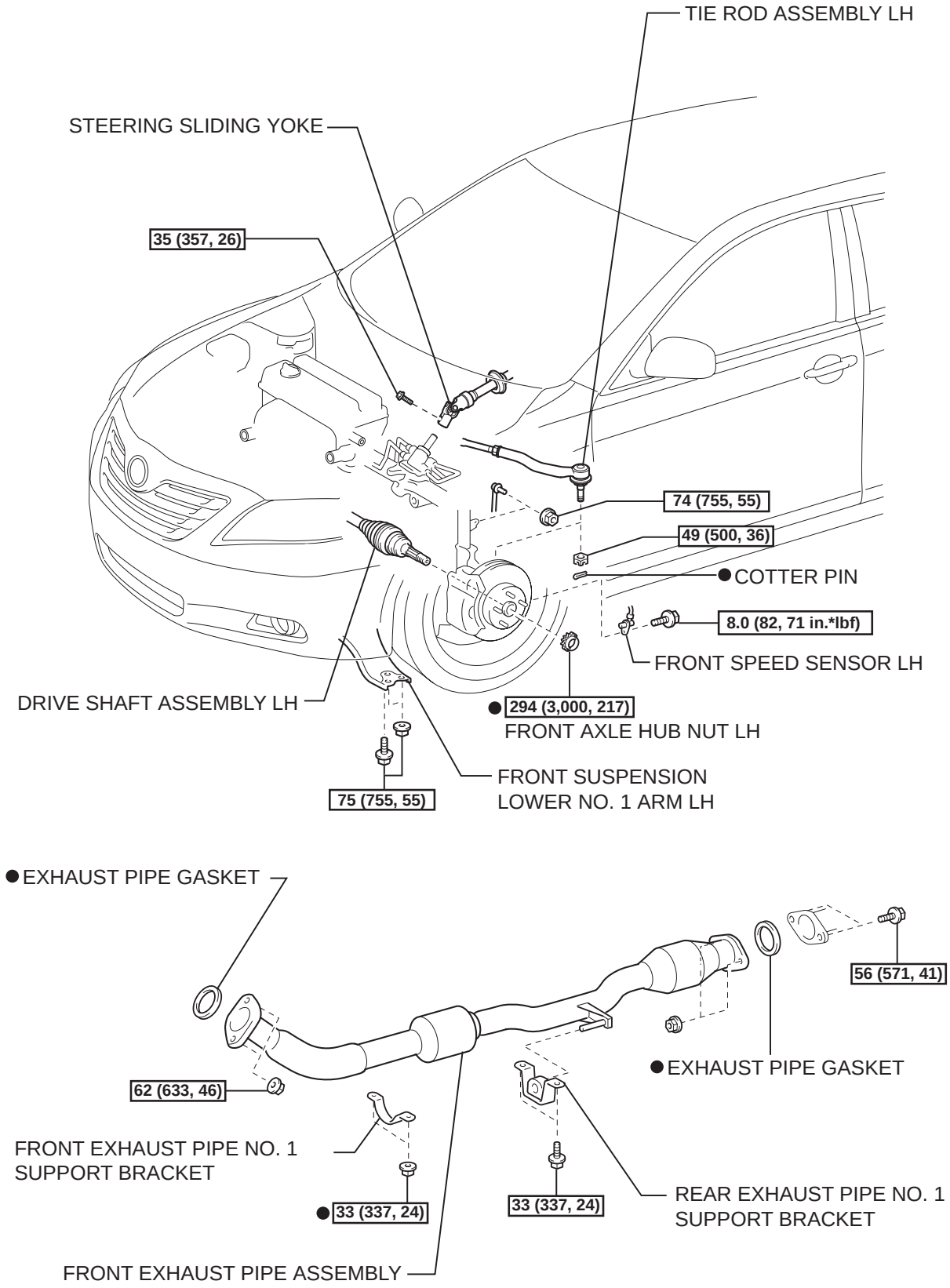

N*m (kgf*cm, ft.*lbf): Specified torque ● Non-reusable part

C

C143322E01

cardiagn.com

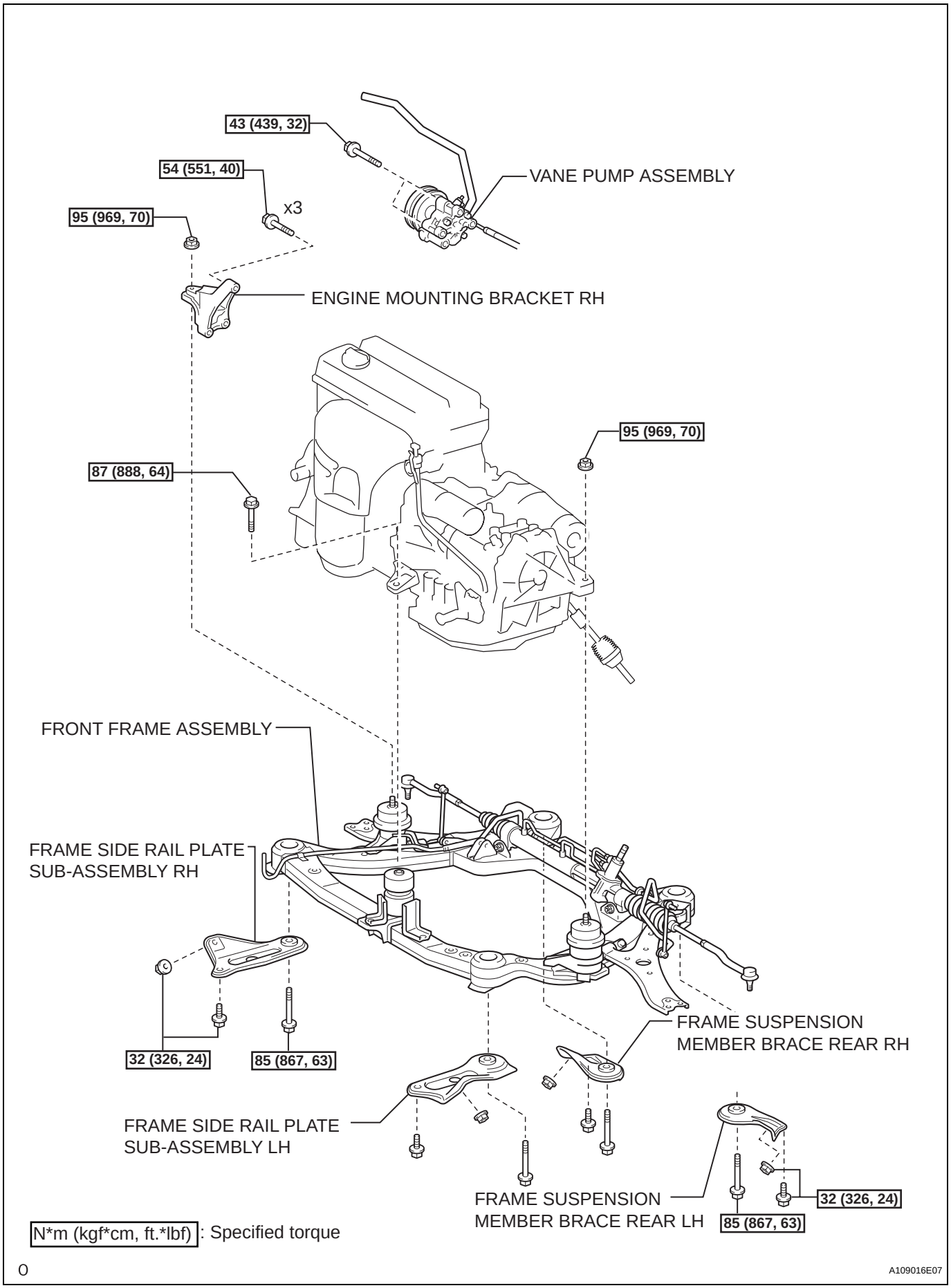

cardiagn.com

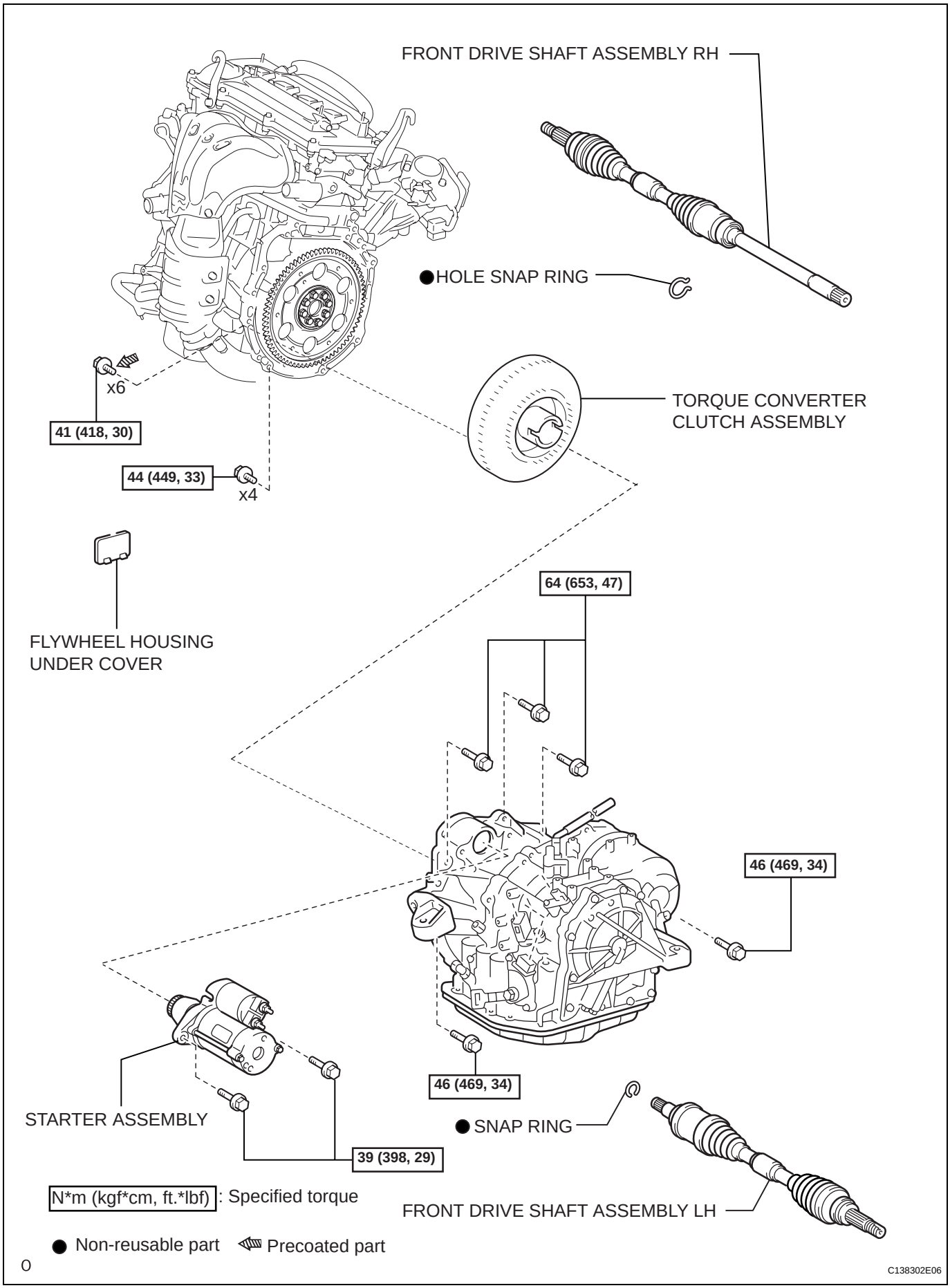

cardiagn.com

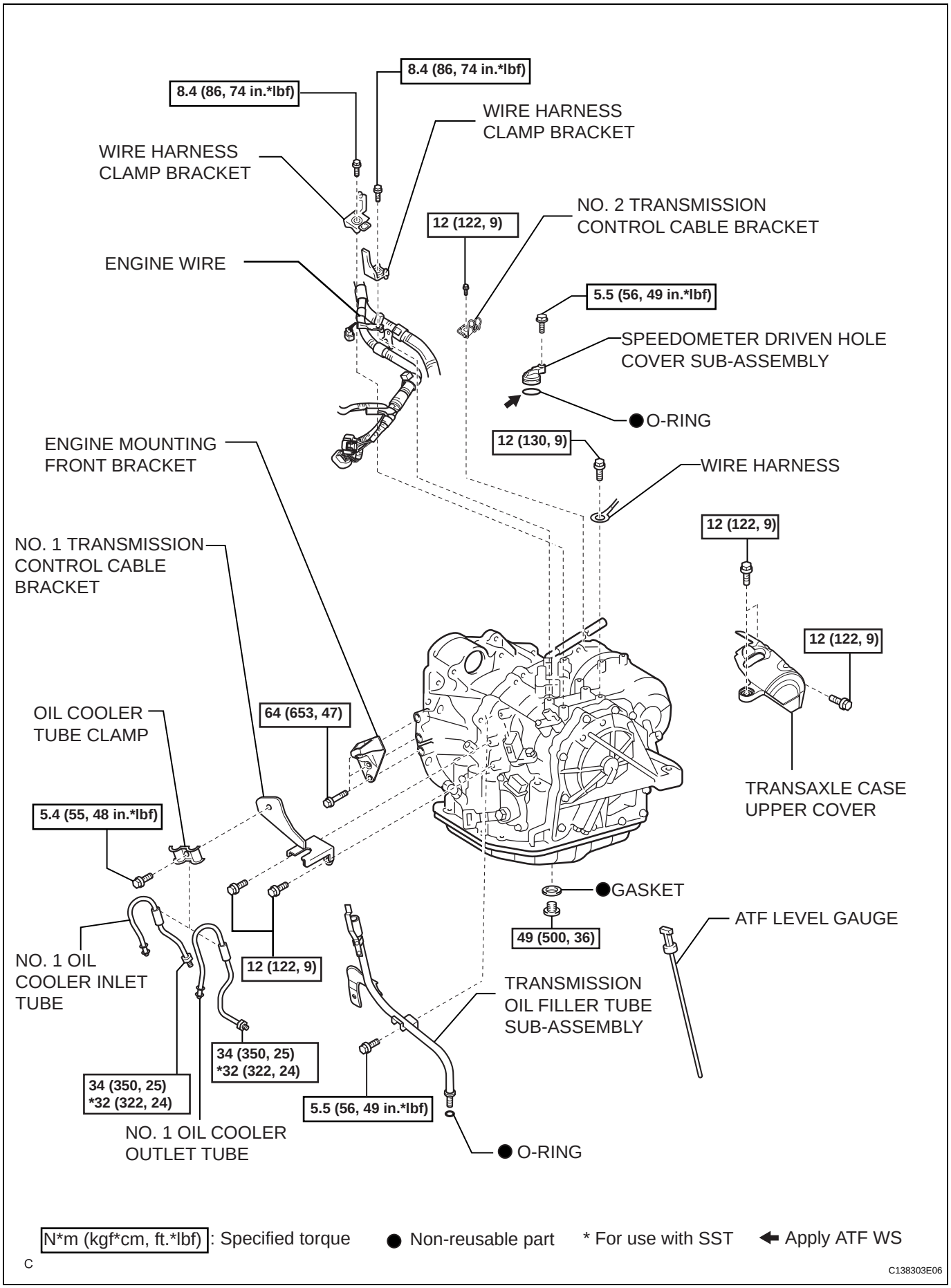

cardiagn.com

REMOVAL

1. **DISCHARGE FUEL SYSTEM PRESSURE**
   HINT:
   See page FU-1.
2. **DISCONNECT CABLE FROM NEGATIVE BATTERY TERMINAL**
3. **PLACE FRONT WHEELS FACING STRAIGHT AHEAD**
4. **REMOVE FRONT WHEELS**
5. **REMOVE ENGINE UNDER COVER LH**
6. **REMOVE ENGINE UNDER COVER RH**
7. **REMOVE FRONT FENDER APRON SEAL RH**
8. **DRAIN ENGINE OIL (See page LU-4)**
9. **DRAIN ENGINE COOLANT (See page CO-5)**
10. **DRAIN AUTOMATIC TRANSAXLE FLUID**
    (a) Using a 6 mm socket hexagon wrench, remove the drain plug and gasket, and drain ATF.
    (b) Install a new gasket and the drain plug.
    Torque: 49 N*m (500 kgf*cm, 36 ft.*lbf)
11. **REMOVE WINDSHIELD WIPER LINK ASSEMBLY**
    HINT:
    See page WW-9.
12. **REMOVE COWL TOP PANEL OUTER SUB-ASSEMBLY (See page ES-424)**
13. **REMOVE NO. 1 ENGINE COVER SUB-ASSEMBLY (See page EM-94)**
14. **REMOVE V-RIBBED BELT (See page EM-6)**
15. **REMOVE AIR CLEANER INLET ASSEMBLY (See page EM-94)**
16. **REMOVE AIR CLEANER CAP SUB-ASSEMBLY (See page ES-416)**
17. **REMOVE AIR CLEANER CASE SUB-ASSEMBLY (See page EM-95)**
18. **REMOVE BATTERY (See page EM-95)**
19. **REMOVE NO. 2 ENGINE MOUNTING STAY RH (See page EM-95)**
20. **REMOVE ENGINE MOVING CONTROL ROD SUB-ASSEMBLY (See page EM-95)**
21. **REMOVE NO. 2 ENGINE MOUNTING BRACKET RH (See page EM-96)**
22. **DISCONNECT NO. 1 VACUUM HOSE CONNECTOR (See page EM-96)**
23. **DISCONNECT RADIATOR HOSE INLET (See page EM-96)**

cardiagn.com

24. DISCONNECT RADIATOR HOSE OUTLET (See page EM-96)

25. DISCONNECT OIL COOLER INLET HOSE (See page CO-22)

26. DISCONNECT OIL COOLER OUTLET HOSE (See page CO-23)

27. DISCONNECT HEATER INLET WATER HOSE (See page EM-97)

28. DISCONNECT HEATER OUTLET WATER HOSE (See page EM-97)

29. REMOVE ECM (See page EM-97)

30. DISCONNECT ENGINE WIRE (See page EM-97)

31. DISCONNECT TRANSMISSION CONTROL CABLE ASSEMBLY

(a) Remove the nut from the control shaft lever.

(b) Disconnect the transmission control cable assembly from the control shaft lever.

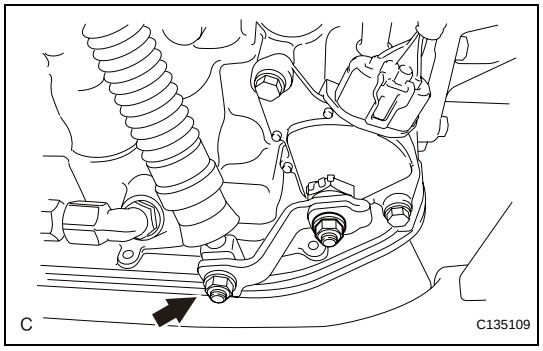

(c) Remove the clip and disconnect the transmission control cable assembly from the No. 1 control cable bracket.

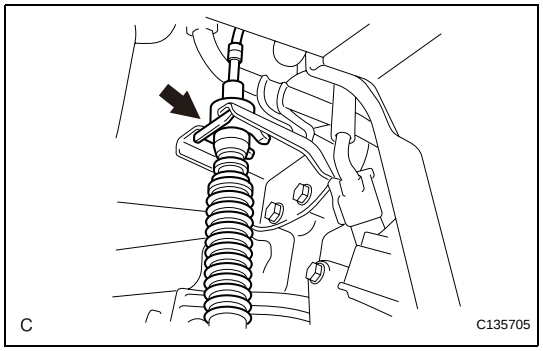

(d) Disconnect the transmission control cable assembly from the control cable clamp.

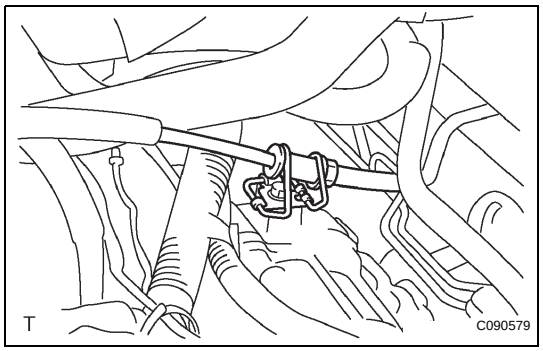

32. DISCONNECT NO. 1 OIL RESERVOIR TO PUMP HOSE (See page EM-98)

33. DISCONNECT RETURN TUBE SUB-ASSEMBLY (See page EM-99)

34. DISCONNECT FUEL TUBE SUB-ASSEMBLY (See page EM-99)

35. REMOVE GENERATOR ASSEMBLY (See page CH-11)

36. SEPARATE COMPRESSOR AND MAGNETIC CLUTCH (See page EM-99)

37. REMOVE FRONT EXHAUST PIPE ASSEMBLY (See page EX-3)

cardiagn.com

38. REMOVE FRONT AXLE HUB NUT LH (See page DS-7)

39. REMOVE FRONT AXLE HUB NUT RH
HINT:
Use the same procedures described for the LH side.

40. REMOVE FRONT STABILIZER LINK ASSEMBLY LH (See page DS-7)

41. REMOVE FRONT STABILIZER LINK ASSEMBLY RH
HINT:
Use the same procedures described for the LH side.

42. REMOVE FRONT SPEED SENSOR LH (See page DS-7)

43. REMOVE FRONT SPEED SENSOR RH
HINT:
Use the same procedures described for the LH side.

44. DISCONNECT TIE ROD ASSEMBLY LH (See page DS-8)

45. DISCONNECT TIE ROD ASSEMBLY RH
HINT:
Use the same procedures described for the LH side.

46. DISCONNECT FRONT SUSPENSION LOWER NO. 1 ARM LH (See page DS-8)

47. DISCONNECT FRONT SUSPENSION LOWER NO. 1 ARM RH
HINT:
Use the same procedures described for the LH side.

48. SEPARATE FRONT AXLE ASSEMBLY LH (See page DS-8)

49. SEPARATE FRONT AXLE ASSEMBLY RH
HINT:
Use the same procedures described for the LH side.

50. REMOVE DRIVE PLATE AND TORQUE CONVERTER CLUTCH SETTING BOLT
(a) Remove the flywheel housing under cover.

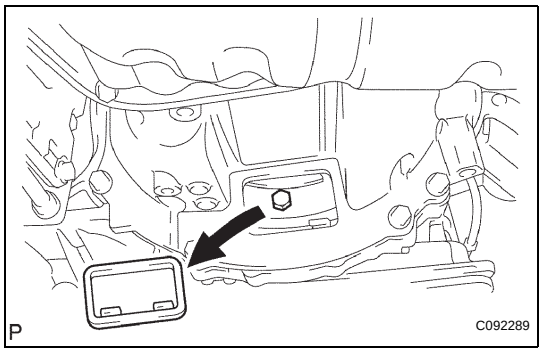

cardiagn.com

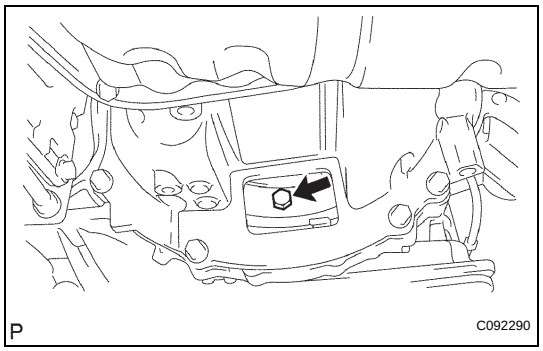

(b) Turn the crankshaft to gain access and remove the 6 bolts while holding the crankshaft pulley bolt with a wrench.
HINT:
There will be one green colored bolt.

51. SEPARATE STEERING SLIDING YOKE (See page PS-40)

52. REMOVE ENGINE ASSEMBLY WITH TRANSAXLE (See page EM-100)

53. REMOVE VANE PUMP ASSEMBLY (See page EM-101)

54. REMOVE FRONT FRAME ASSEMBLY (See page EM-101)

55. REMOVE FRONT DRIVE SHAFT ASSEMBLY LH (See page DS-9)

56. REMOVE FRONT DRIVE SHAFT ASSEMBLY RH (See page DS-9)

57. REMOVE ENGINE WIRE

58. REMOVE STARTER ASSEMBLY (See page ST-5)

59. REMOVE ENGINE MOUNTING FRONT BRACKET

(a) Remove the 3 bolts and engine mounting front bracket.

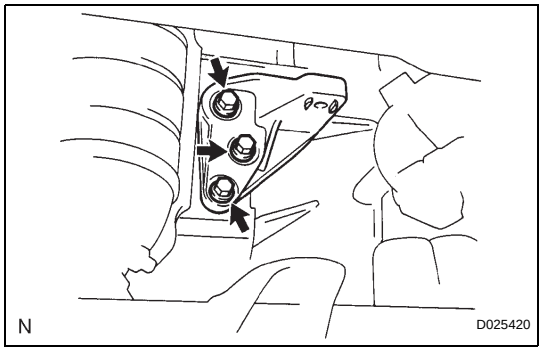

60. SEPARATE AUTOMATIC TRANSAXLE ASSEMBLY

(a) Remove the 5 bolts.

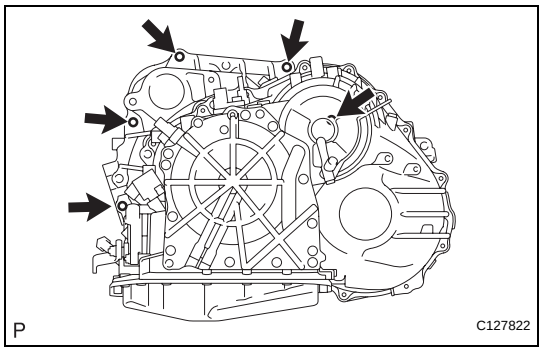

cardiagn.com

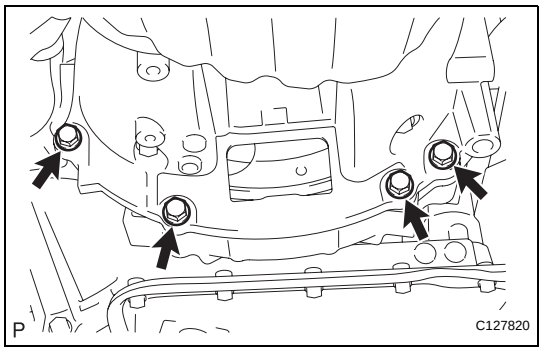

(b) Remove the 4 lower side mounting bolts.
(c) Separate and remove the automatic transaxle.

61. REMOVE TORQUE CONVERTER CLUTCH ASSEMBLY

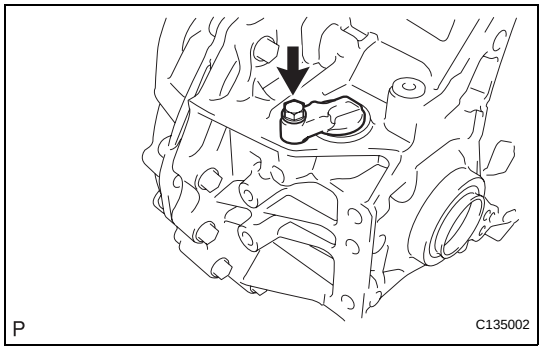

62. REMOVE SPEEDOMETER DRIVEN HOLE COVER SUB-ASSEMBLY
(a) Remove the bolt and hole cover from the transaxle case.
(b) Remove the O-ring from the hole cover.

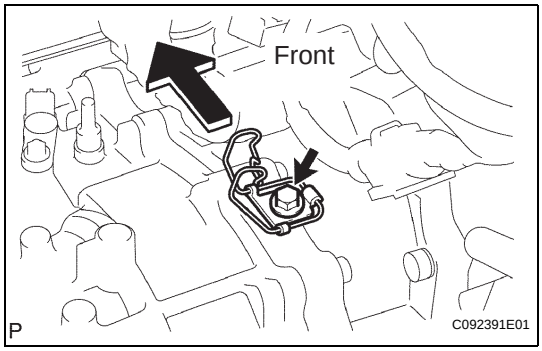

63. REMOVE NO. 2 TRANSMISSION CONTROL CABLE BRACKET
(a) Remove the bolt and No. 2 transmission control cable bracket.

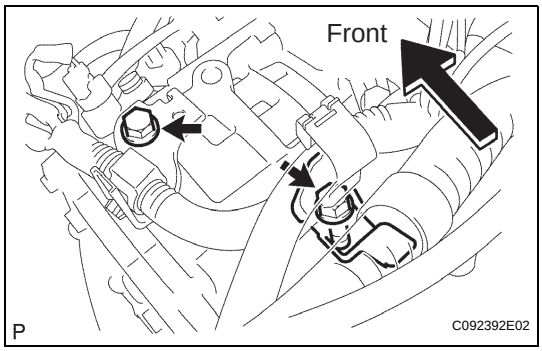

64. REMOVE WIRE HARNESS CLAMP BRACKET
(a) Disconnect the wire harnesses from the 2 brackets.
(b) Remove the 2 bolts and 2 clamps.

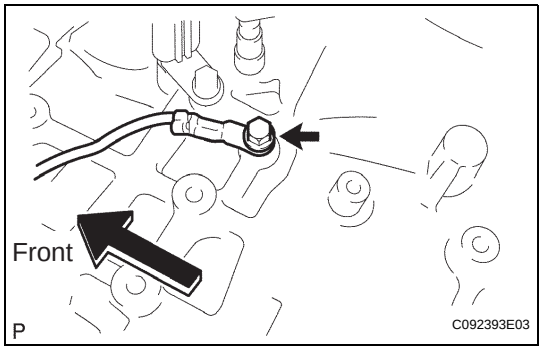

65. DISCONNECT WIRE HARNESS
(a) Remove the bolt and disconnect the wire harness.

cardiagn.com

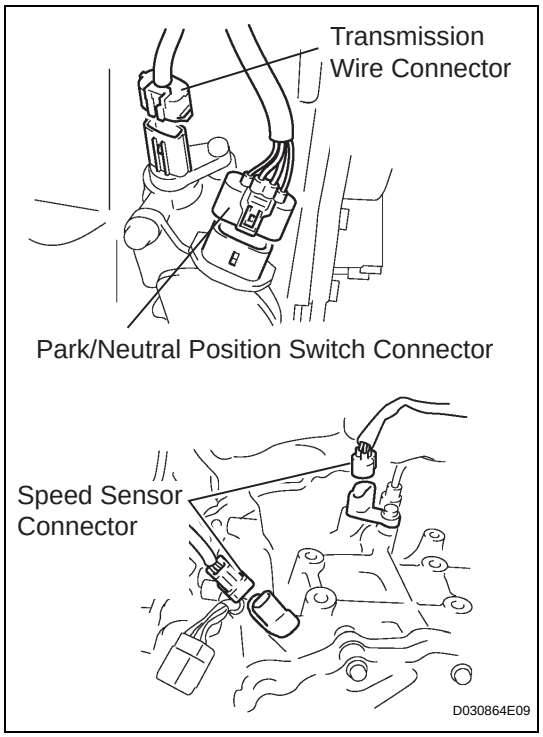

66. DISCONNECT CONNECTORS

(a) Disconnect the transmission wire connector.
(b) Disconnect the park/neutral position switch connector.
(c) Disconnect the 2 speed sensor connectors.

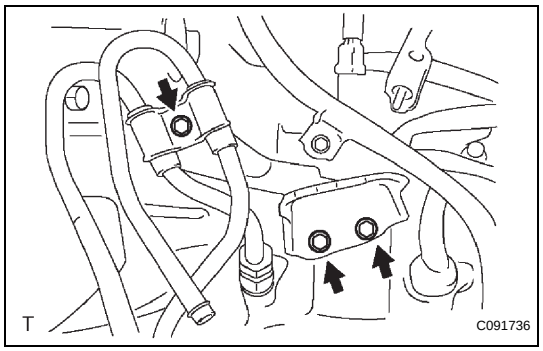

67. REMOVE NO. 1 TRANSMISSION CONTROL CABLE BRACKET

(a) Remove the bolt and oil cooler tube clamp.
(b) Remove the 2 bolts and No. 1 transmission control cable bracket.

68. REMOVE TRANSMISSION OIL FILLER TUBE SUB-ASSEMBLY

(a) Remove the ATF level gauge.

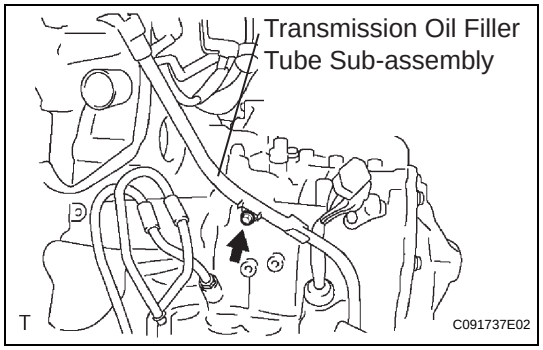

(b) Remove the bolt and transmission oil filler tube sub-assembly.
(c) Remove the O-ring from the oil filler tube sub-assembly.

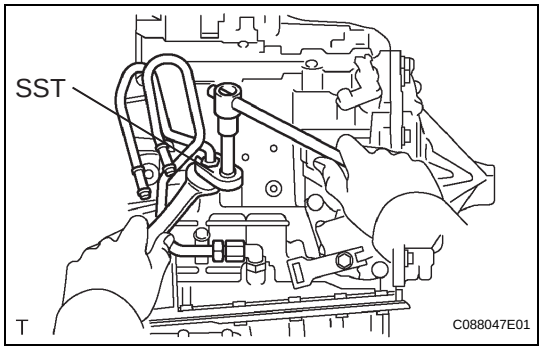

69. REMOVE NO. 1 OIL COOLER INLET TUBE

(a) Using SST and a wrench, disconnect the No. 1 oil cooler inlet tube.
SST 09023-12701

70. REMOVE NO. 1 OIL COOLER OUTLET TUBE

(a) Using SST and a wrench, disconnect the No. 1 oil cooler outlet tube.
SST 09023-12701

cardiagn.com

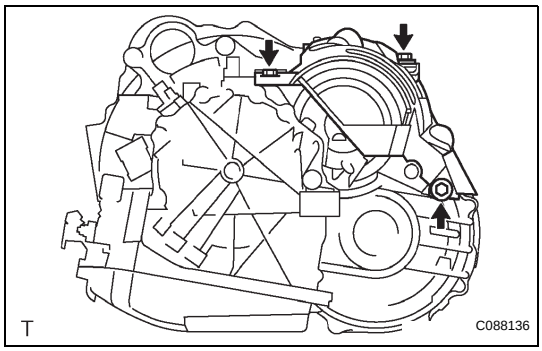

71. REMOVE TRANSAXLE CASE UPPER COVER

(a) Remove the 3 bolts and transaxle case upper cover.

INSTALLATION

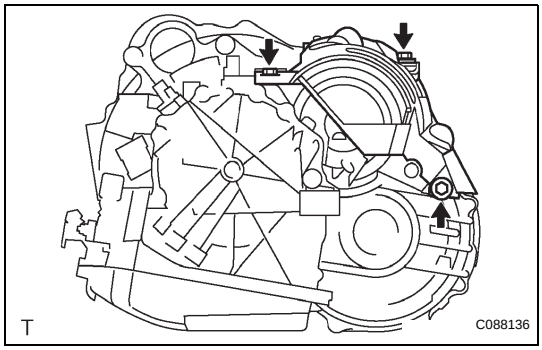

1. INSTALL TRANSAXLE CASE UPPER COVER

(a) Install the transmission case upper cover with the 3 bolts.
Torque: 12 N*m (117 kgf*cm, 8 ft.*lbf)

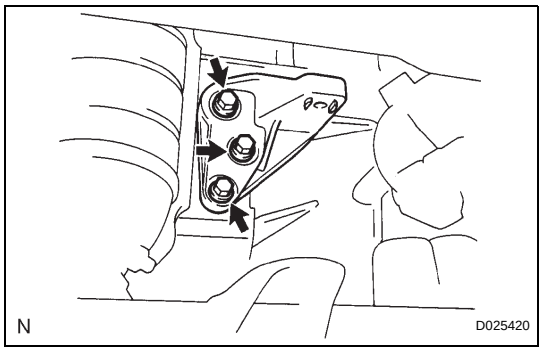

2. INSTALL ENGINE MOUNTING FRONT BRACKET

(a) Install the engine mounting front bracket to the automatic transaxle with the 3 bolts.
Torque: 64 N*m (653 kgf*cm, 47 ft.*lbf)

3. INSTALL TRANSMISSION OIL FILLER TUBE SUB-ASSEMBLY

(a) Coat a new O-ring with ATF, and install it to the oil filler tube.

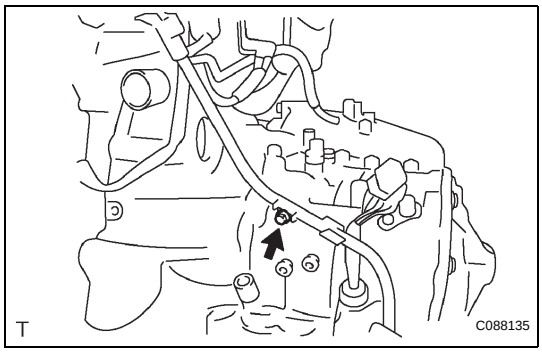

(b) Install the oil filler tube to the automatic transaxle with the bolt.
Torque: 5.5 N*m (56 kgf*cm, 49 in.*lbf)

(c) Install the ATF level gauge.

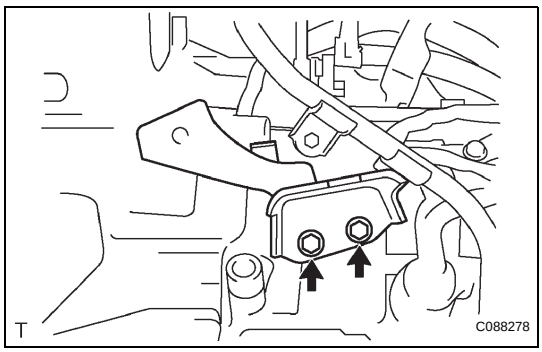

4. INSTALL NO. 1 TRANSMISSION CONTROL CABLE BRACKET

(a) Install the No. 1 control cable bracket with the 2 bolts.
Torque: 12 N*m (122 kgf*cm, 9 ft.*lbf)

5. INSTALL NO. 1 OIL COOLER INLET TUBE

(a) Temporarily install the No. 1 oil cooler outlet tube.
(b) Temporarily install the No. 1 oil cooler inlet tube.

cardiagn.com

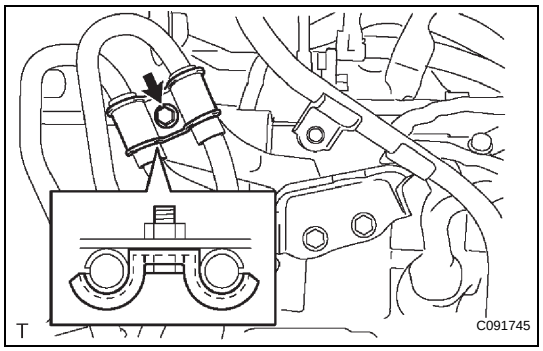

(c) Install the oil cooler tube clamp with the bolt.
Torque: 5.4 N*m (55 kgf*cm, 48 in.*lbf)
HINT:
Install the oil cooler tube clamp so that the oil cooler tube cushions are positioned as shown in the illustration.

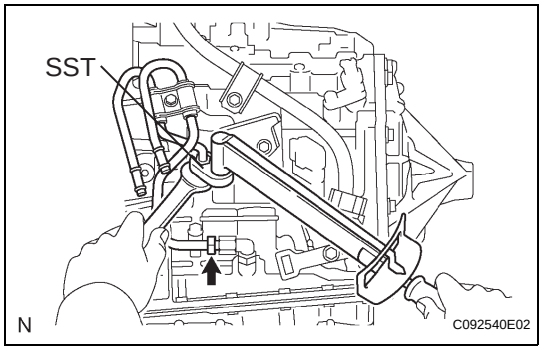

(d) Using SST and a wrench, tighten the No. 1 oil cooler inlet tube.
SST 09023-12701
Torque: For use without SST
34 N*m (350 kgf*cm, 25 ft.*lbf)
For use with SST
32 N*m (322 kgf*cm, 24 ft.*lbf)
HINT:
Use a torque wrench with a fulcrum length of 345 mm (13.58 in.).

6. INSTALL NO. 1 OIL COOLER OUTLET TUBE

(a) Using SST and a wrench, tighten the No. 1 oil cooler outlet tube.
SST 09023-12701
Torque: For use without SST
34 N*m (350 kgf*cm, 25 ft.*lbf)
For use with SST
32 N*m (322 kgf*cm, 24 ft.*lbf)
HINT:
Use a torque wrench with a fulcrum length of 345 mm (13.58 in.).

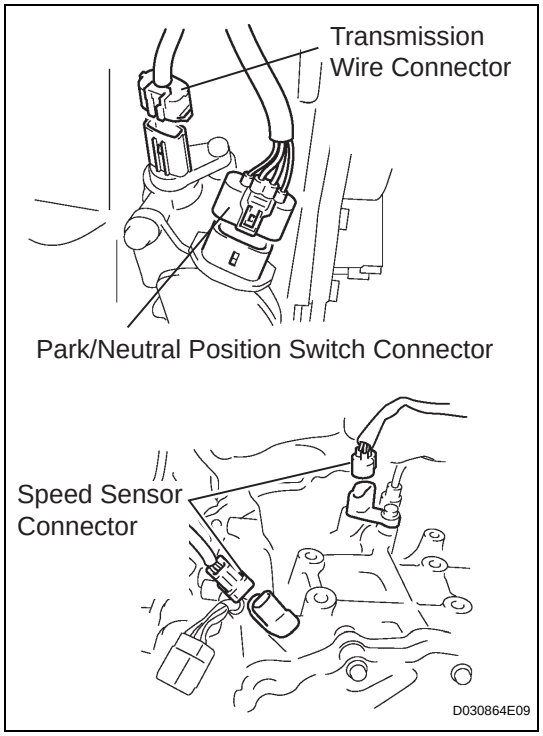

7. CONNECT CONNECTORS

(a) Connect the transmission wire connector.
(b) Connect the park/neutral position switch connector.
(c) Connect the 2 speed sensor connectors.

cardiagn.com

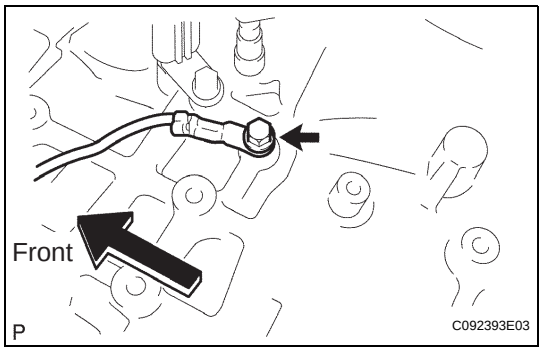

8. CONNECT WIRE HARNESS

(a) Connect the wire harness with the bolt.
Torque: 12 N*m (130 kgf*cm, 9 ft.*lbf)

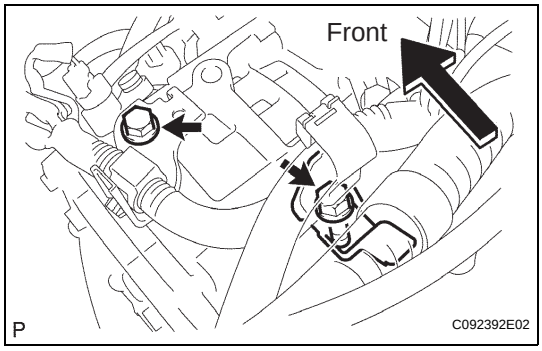

9. INSTALL WIRE HARNESS CLAMP BRACKET

(a) Install the 2 brackets with the 2 bolts.
Torque: 8.4 N*m (86 kgf*cm, 74 in.*lbf)

(b) Connect the wire harnesses to the clamps.

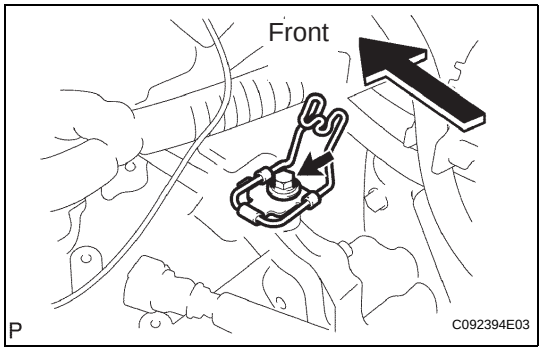

10. INSTALL NO. 2 TRANSMISSION CONTROL CABLE BRACKET

(a) Install the No. 2 transmission control cable bracket with the bolt.
Torque: 12 N*m (122 kgf*cm, 9 ft.*lbf)

11. INSTALL SPEEDOMETER DRIVEN HOLE COVER SUB-ASSEMBLY

(a) Coat a new O-ring with ATF WS, and install it to the hole cover.

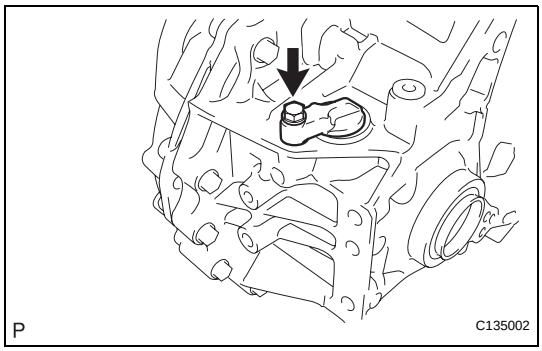

(b) Install the hole cover to the transaxle case with the bolt.
Torque: 5.5 N*m (56 kgf*cm, 47 in.*lbf)

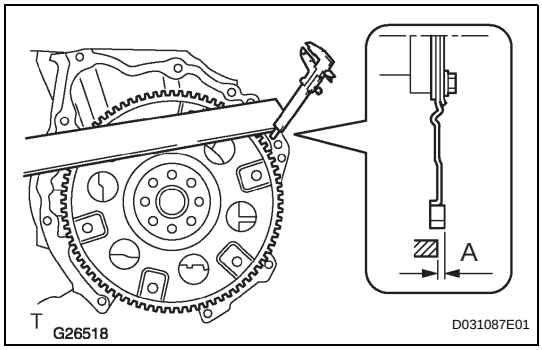

12. INSTALL TORQUE CONVERTER CLUTCH ASSEMBLY

(a) Using vernier calipers and a straight edge, measure dimension "A" between the transaxle fitting part of the engine and the converter fitting part of the drive plate (#1).

cardiagn.com

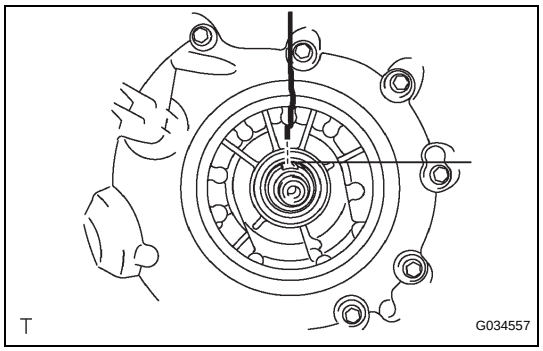

(b) Set the key of the front oil pump drive gear to the top and put a mark on the housing.

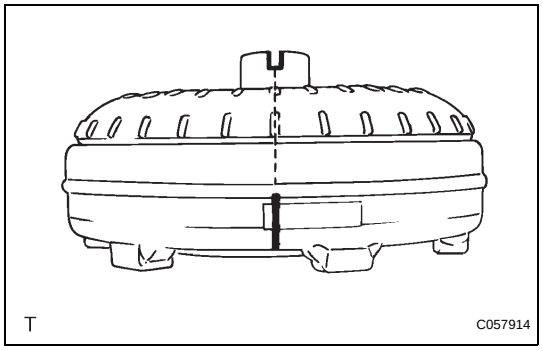

(c) Put a mark on the torque converter clutch so that its groove can be clearly indicated.

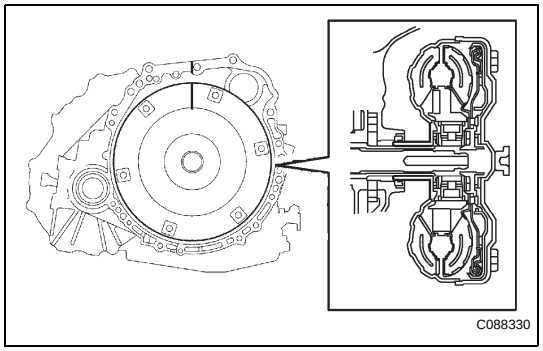

(d) Align the 2 marks on the transaxle case and torque converter clutch and fit the splined part of the input shaft to the spline part of the turbine runner.

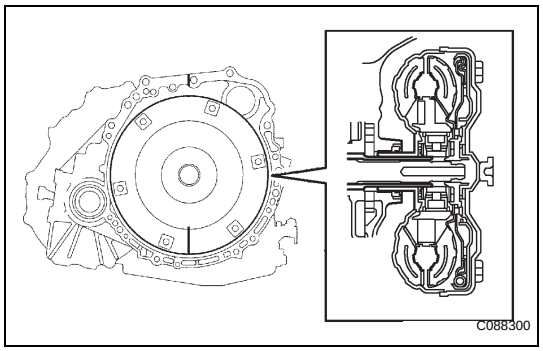

(e) Rotating the torque converter clutch, fit the spline part of the stator shaft to the spline part of the stator.
HINT:
Rotate it about 180 degrees.

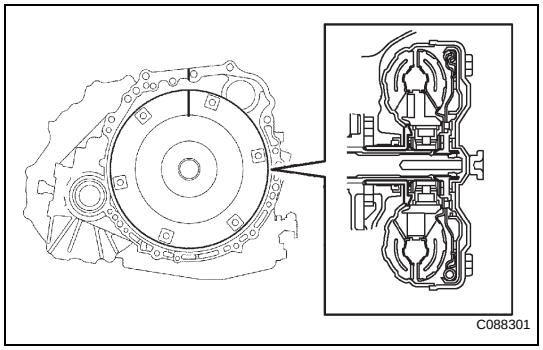

(f) Rotating the torque converter clutch, align the 2 marks on the case and the torque converter clutch again and fit the key of the oil pump drive gear into the key way of the torque converter clutch.
CAUTION:
When rotating the torque converter clutch, do not push it with excessive force.

cardiagn.com

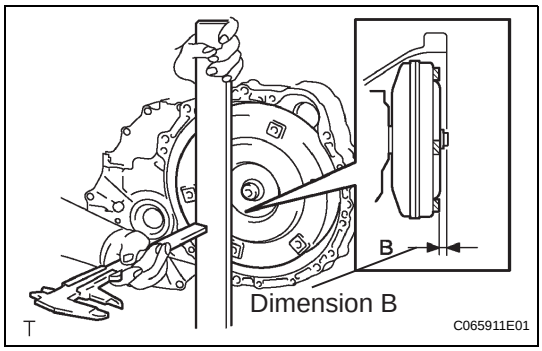

(g) Using vernier calipers and a straight edge, measure dimension "B" shown in the illustration and check that "B" is greater than "A" (measured in step (#1)).
Standard:
A + 1 (0.04 in.) mm or more
NOTICE:
Remember to minus the thickness of the straight edge.

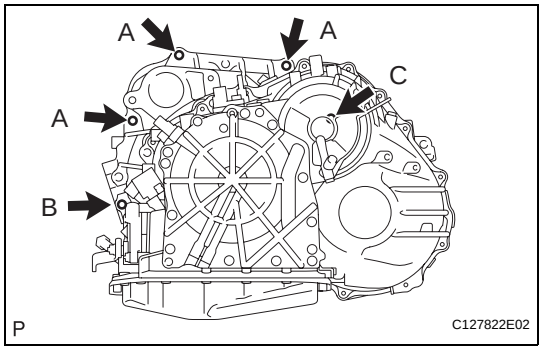

13. INSTALL AUTOMATIC TRANSAXLE ASSEMBLY

(a) Install the automatic transaxle to the engine with the 5 bolts.
Torque: Bolt A
64 N*m (653 kgf*cm, 47 ft.*lbf)
Bolt B
46 N*m (469 kgf*cm, 34 ft.*lbf)
Bolt C
46 N*m (469 kgf*cm, 34 ft.*lbf)

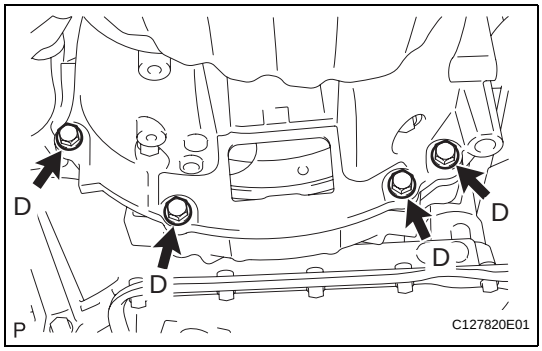

(b) Install the 4 lower side mounting bolts.
Torque: Bolt D
44 N*m (449 kgf*cm, 32 ft.*lbf)

14. INSTALL STARTER ASSEMBLY (See page ST-13)

15. INSTALL ENGINE WIRE

16. INSTALL FRONT DRIVE SHAFT ASSEMBLY LH (See page DS-20)

17. INSTALL FRONT DRIVE SHAFT ASSEMBLY RH (See page DS-21)

18. INSTALL FRONT FRAME ASSEMBLY (See page EM-112)

19. INSTALL VANE PUMP ASSEMBLY (See page EM-113)

20. INSTALL ENGINE ASSEMBLY WITH TRANSAXLE (See page EM-114)

21. INSTALL STEERING SLIDING YOKE (See page PS-65)

22. INSTALL DRIVE PLATE AND TORQUE CONVERTER CLUTCH SETTING BOLT

(a) Apply a few drops of adhesive to 2 threads on the tip of the 6 torque converter clutch mounting bolts.
Adhesive:
Toyota Genuine Adhesive 1324, Three Bond 1324 or Equivalent.

cardiagn.com

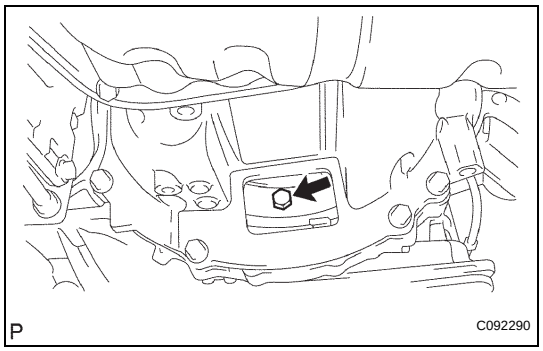

(b) Install the 6 torque converter clutch mounting bolts.
Torque: 41 N*m (418 kgf*cm, 30 ft.*lbf)
NOTICE:
First install the black colored bolt, and then the remaining 5 bolts.

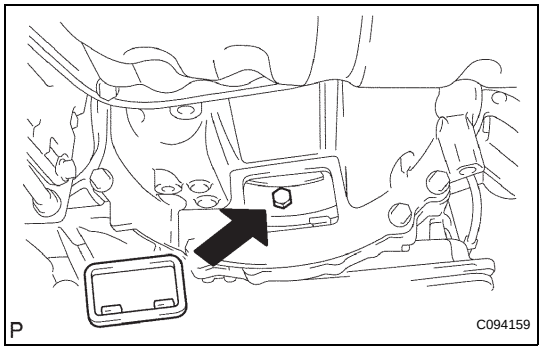

(c) Install the flywheel housing under cover.

23. INSTALL FRONT AXLE ASSEMBLY LH (See page DS-21)

24. INSTALL FRONT AXLE ASSEMBLY RH
HINT:
Use the same procedures described for the LH side.

25. INSTALL FRONT SUSPENSION LOWER NO. 1 ARM LH (See page DS-21)

26. INSTALL FRONT SUSPENSION LOWER NO. 1 ARM RH
HINT:
Use the same procedures described for the LH side.

27. INSTALL TIE ROD ASSEMBLY LH (See page DS-21)

28. INSTALL TIE ROD ASSEMBLY RH
HINT:
Use the same procedures described for the LH side.

29. INSTALL FRONT SPEED SENSOR LH (See page DS-21)

30. INSTALL FRONT SPEED SENSOR RH
HINT:
Use the same procedures described for the LH side.

31. INSTALL FRONT STABILIZER LINK ASSEMBLY LH (See page DS-22)

32. INSTALL FRONT STABILIZER LINK ASSEMBLY RH
HINT:
Use the same procedures described for the LH side.

33. INSTALL FRONT AXLE HUB NUT LH (See page DS-22)

34. INSTALL FRONT AXLE HUB NUT RH
HINT:
Use the same procedures described for the LH side.

35. INSTALL FRONT EXHAUST PIPE ASSEMBLY (See page EX-3)

36. CONNECT COMPRESSOR AND MAGNETIC CLUTCH (See page EM-115)

37. INSTALL GENERATOR ASSEMBLY (See page CH-19)

cardiagn.com

38. CONNECT FUEL TUBE SUB-ASSEMBLY (See page EM-115)

39. CONNECT RETURN TUBE SUB-ASSEMBLY (See page EM-116)

40. CONNECT NO. 1 OIL RESERVOIR TO PUMP HOSE (See page EM-116)

41. CONNECT TRANSMISSION CONTROL CABLE ASSEMBLY

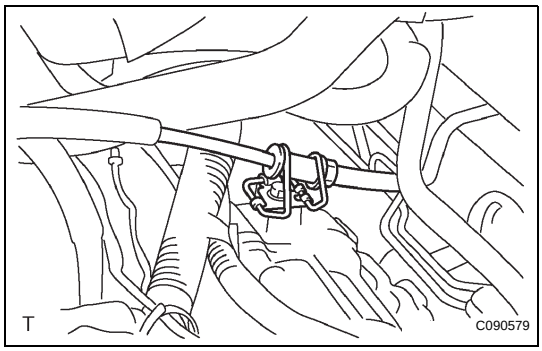

(a) Connect the transmission control cable assembly to the control cable clamp.

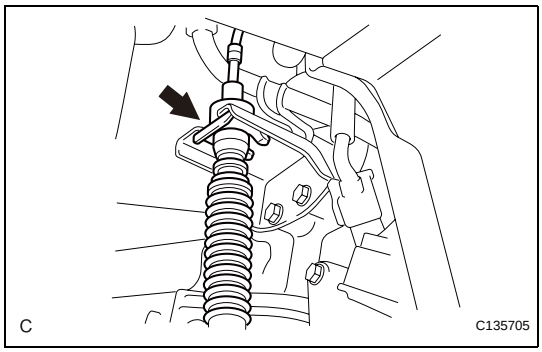

(b) Connect the transmission control cable to the bracket with a new clip.

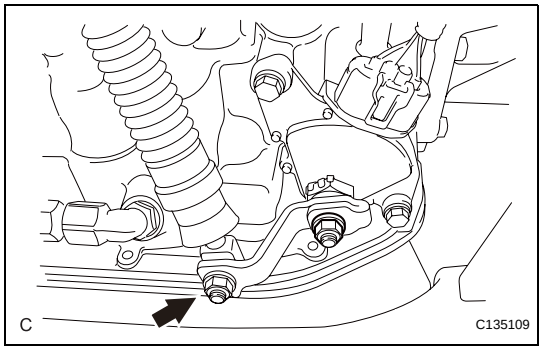

(c) Connect the transmission control cable assembly to the control shaft lever with the nut.
Torque: 15 N*m (150 kgf*cm, 11 ft.*lbf)

42. CONNECT ENGINE WIRE (See page EM-117)

43. INSTALL ECM (See page EM-117)

44. CONNECT HEATER INLET WATER HOSE (See page EM-117)

45. CONNECT HEATER OUTLET WATER HOSE (See page EM-118)

46. CONNECT OIL COOLER INLET HOSE (See page CO-30)

47. CONNECT OIL COOLER OUTLET HOSE (See page CO-30)

48. CONNECT RADIATOR HOSE INLET (See page EM-118)

49. CONNECT RADIATOR HOSE OUTLET (See page EM-118)

50. CONNECT NO. 1 VACUUM HOSE CONNECTOR (See page EM-118)

51. INSTALL NO. 2 ENGINE MOUNTING BRACKET RH (See page EM-118)

cardiagn.com

52. **INSTALL ENGINE MOVING CONTROL ROD SUB-ASSEMBLY (See page EM-119)**
53. **INSTALL NO. 2 ENGINE MOUNTING STAY RH (See page EM-119)**
54. **INSTALL BATTERY (See page EM-119)**
55. **INSTALL AIR CLEANER CASE SUB-ASSEMBLY (See page EM-120)**
56. **INSTALL AIR CLEANER CAP SUB-ASSEMBLY (See page ES-419)**
57. **INSTALL AIR CLEANER INLET ASSEMBLY (See page EM-120)**
58. **INSTALL V-RIBBED BELT (See page EM-6)**
59. **INSTALL COWL TOP PANEL OUTER SUB-ASSEMBLY (See page ES-426)**
60. **INSTALL WINDSHIELD WIPER LINK ASSEMBLY**
    HINT:
    See page WW-13.
61. **INSTALL FRONT WHEEL (See page EM-120)**
62. **ADD ENGINE OIL**
63. **CONNECT CABLE TO NEGATIVE BATTERY TERMINAL (See page EM-120)**
64. **ADD ENGINE COOLANT (See page CO-5)**
65. **ADD AUTOMATIC TRANSAXLE FLUID**
    Fluid type:
    Toyota Genuine ATF WS
66. **ADD POWER STEERING FLUID**
67. **BLEED POWER STEERING FLUID (See page PS-7)**
68. **INSPECT AUTOMATIC TRANSAXLE FLUID (See page AX-123)**
69. **CHECK FOR FUEL LEAKS (See page FU-9)**
70. **CHECK FOR ENGINE OIL LEAKS**
71. **CHECK FOR ENGINE COOLANT LEAKS (See page CO-1)**
72. **CHECK FOR EXHAUST GAS LEAKS**
73. **CHECK FOR SHIFT LEVER POSITION (See page AX-179)**
74. **ADJUST SHIFT LEVER POSITION (See page AX-182)**
75. **INSPECT AND ADJUST FRONT WHEEL ALIGNMENT**
    HINT:
    See page SP-4.
76. **CHECK IGNITION TIMING (See page EM-1)**
77. **CHECK ENGINE IDLE SPEED (See page EM-2)**

cardiagn.com

78. INSPECT CO/HC (See page EM-3)

79. INSTALL FRONT FENDER APRON SEAL RH

80. INSTALL ENGINE UNDER COVER LH

81. INSTALL ENGINE UNDER COVER RH

82. INSTALL NO. 1 ENGINE COVER SUB-ASSEMBLY (See page EM-121)

83. CHECK ABS SPEED SENSOR SIGNAL
HINT:
See page BC-11.

cardiagn.com

SHIFT LEVER

COMPONENTS

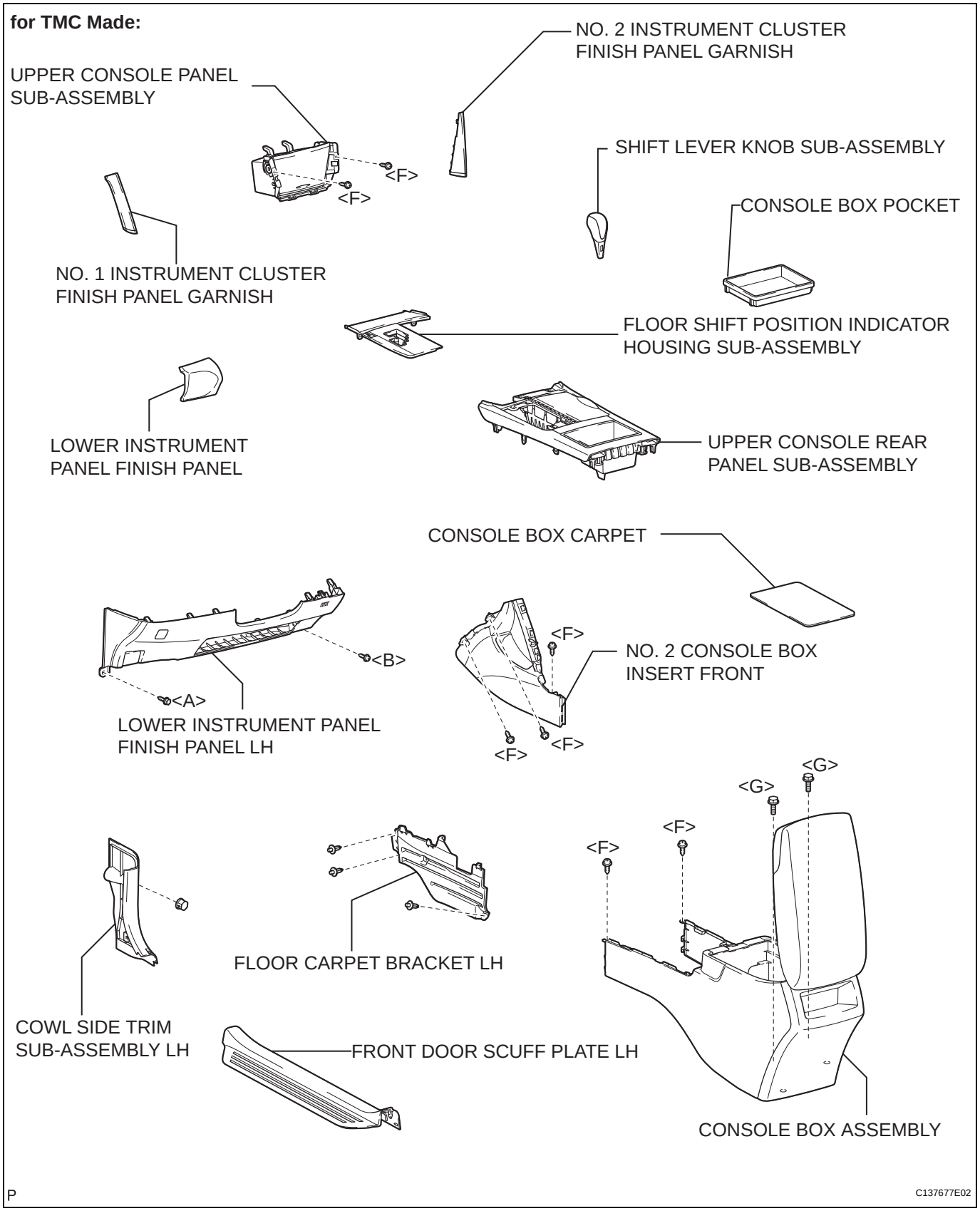

cardiagn.com

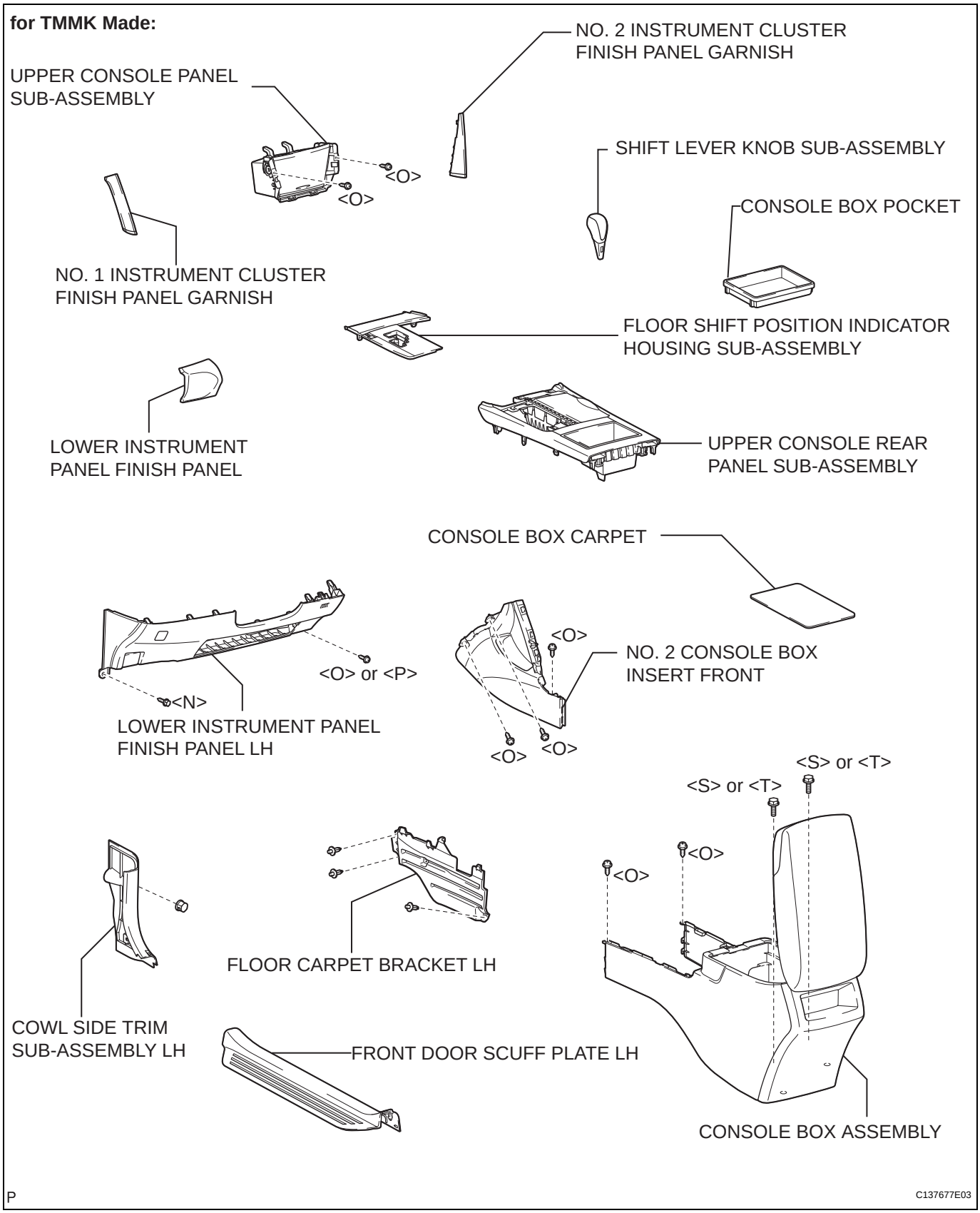

cardiagn.com

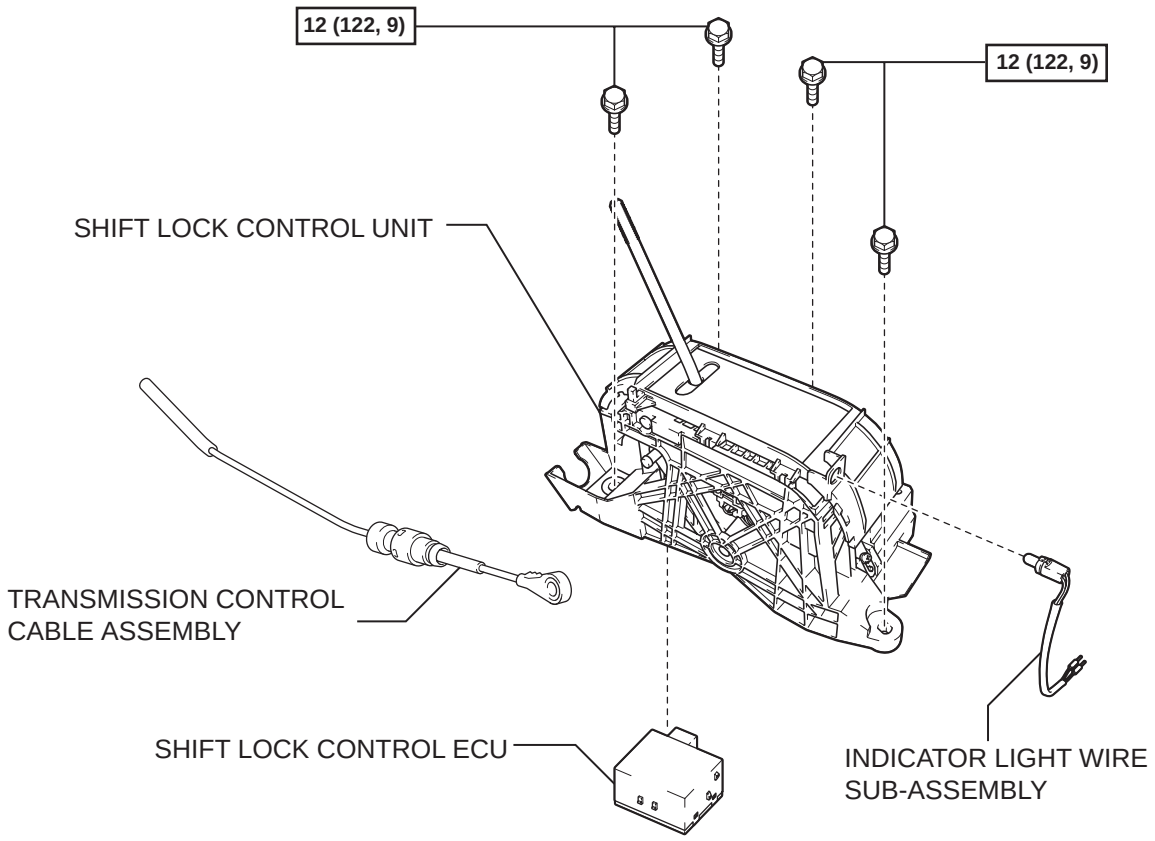

N*m (kgf*cm, ft.*lbf) : Specified torque

C135729E04

cardiagn.com

ON-VEHICLE INSPECTION

1. INSPECT SHIFT LEVER POSITION

(a) When shifting from the P to the R position with the ignition switch on and the brake pedal depressed, make sure that the shift lever moves smoothly and moves correctly into the position.

(b) Start the engine and make sure that the vehicle moves forward when shifting from the N to the D position and moves rearward when shifting to the R position. If operation cannot be done as specified, inspect the park/neutral position switch assembly and check the shift lever assembly installation condition.

cardiagn.com

REMOVAL

1. **DISCONNECT CABLE FROM NEGATIVE BATTERY TERMINAL**
2. **REMOVE FRONT DOOR SCUFF PLATE LH (See page IR-24)**
3. **REMOVE COWL SIDE TRIM SUB-ASSEMBLY LH (See page IR-25)**
4. **REMOVE LOWER INSTRUMENT PANEL FINISH PANEL LH (for TMC Made) (See page IP-20)**
5. **REMOVE LOWER INSTRUMENT PANEL FINISH PANEL LH (for TMMK Made) (See page IP-21)**
6. **REMOVE LOWER INSTRUMENT PANEL FINISH PANEL (See page IP-22)**
7. **REMOVE SHIFT LEVER KNOB SUB-ASSEMBLY**
   (a) Turn the shift lever knob counterclockwise and remove the shift lever knob sub-assembly.

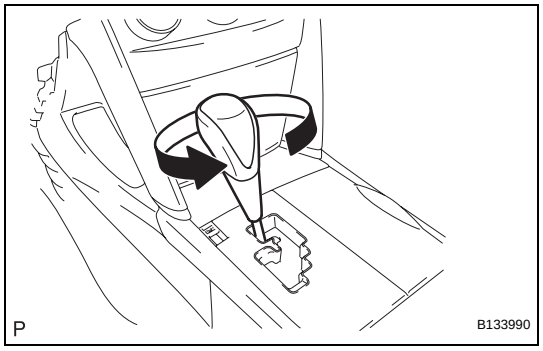

8. **REMOVE NO. 1 INSTRUMENT CLUSTER FINISH PANEL GARNISH (See page IP-24)**
9. **REMOVE NO. 2 INSTRUMENT CLUSTER FINISH PANEL GARNISH (See page IP-25)**
10. **REMOVE FLOOR SHIFT POSITION INDICATOR HOUSING SUB-ASSEMBLY (See page IP-25)**
11. **REMOVE UPPER CONSOLE REAR PANEL SUB-ASSEMBLY (See page IP-26)**
12. **REMOVE UPPER CONSOLE PANEL SUB-ASSEMBLY (for TMC Made) (See page IP-27)**
13. **REMOVE UPPER CONSOLE PANEL SUB-ASSEMBLY (for TMMK Made) (See page IP-27)**
14. **REMOVE CONSOLE BOX POCKET (See page IP-28)**
15. **REMOVE CONSOLE BOX CARPET (See page IP-28)**
16. **REMOVE CONSOLE BOX ASSEMBLY (for TMC Made) (See page IP-28)**
17. **REMOVE CONSOLE BOX ASSEMBLY (for TMMK Made) (See page IP-29)**
18. **REMOVE NO. 2 CONSOLE BOX INSERT FRONT (for TMC Made) (See page IP-29)**
19. **REMOVE NO. 2 CONSOLE BOX INSERT FRONT (for TMMK Made) (See page IP-30)**
20. **REMOVE FLOOR CARPET BRACKET LH (See page AC-155)**
21. **REMOVE TRANSMISSION CONTROL CABLE ASSEMBLY**
    (a) Disconnect the end of the transmission control cable assembly from the shift lock control unit.

cardiagn.com

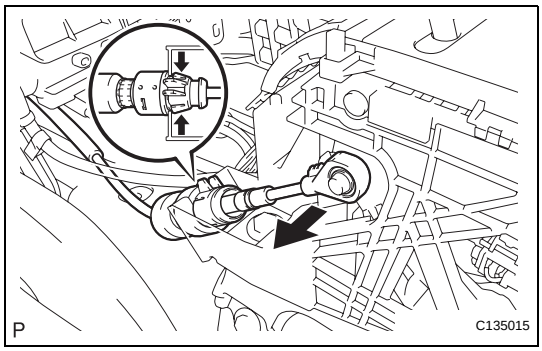

(b) Disconnect the transmission control cable assembly from the shift lock control unit.

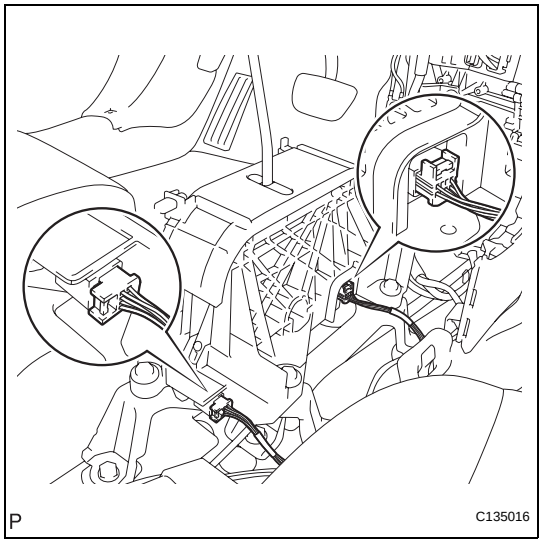

22. REMOVE SHIFT LOCK CONTROL UNIT

(a) Disconnect the shift lock control ECU connector and transmission control switch wire connector.

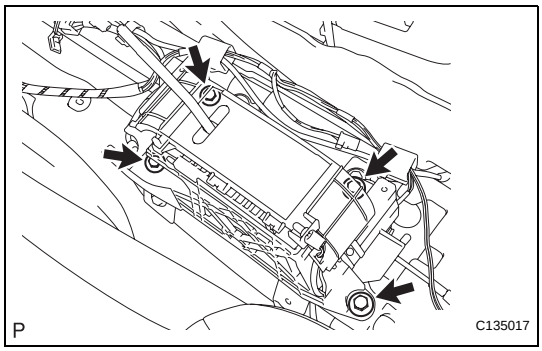

(b) Remove the 4 bolts and shift lever.

DISASSEMBLY

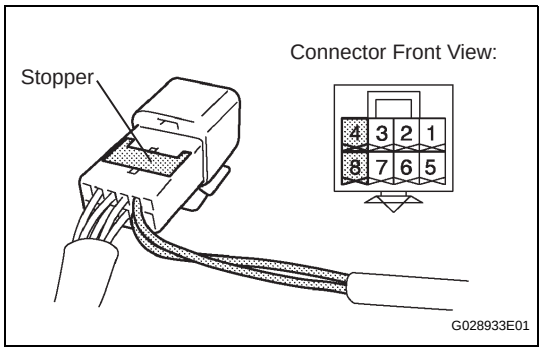

1. REMOVE INDICATOR LIGHT WIRE SUB-ASSEMBLY

(a) Using a screwdriver, release the stopper.

(b) Using a screwdriver, disengage the locking lug of terminals (4) and (8), and pull the terminals out from the rear of the connector.

cardiagn.com

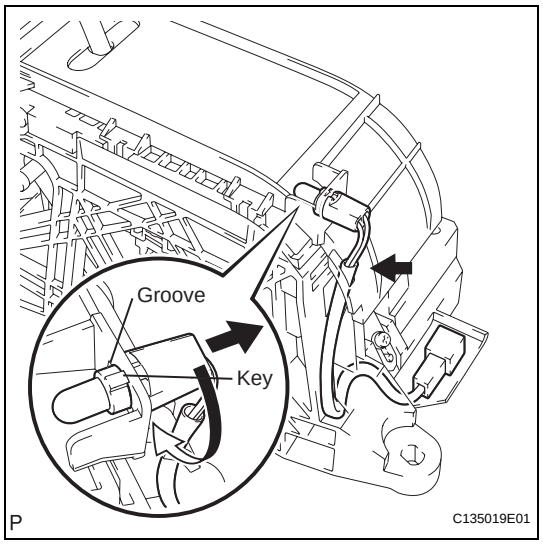

(c) Release the indicator light wire from the clamp on the shift lock control unit.
(d) Turn the indicator light guide counterclockwise.
(e) Align the indicator light guide key with the groove on the shift lock control unit to remove the indicator light wire.

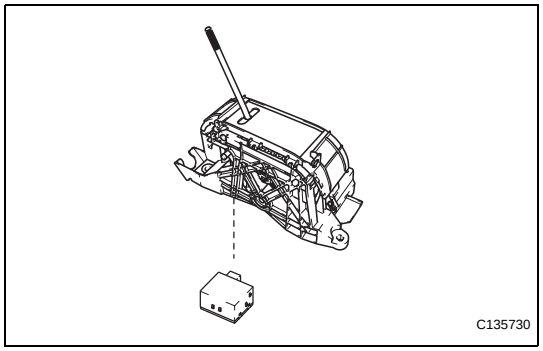

2. REMOVE SHIFT LOCK CONTROL ECU

(a) Remove the shift lock control ECU from the shift lock control unit.

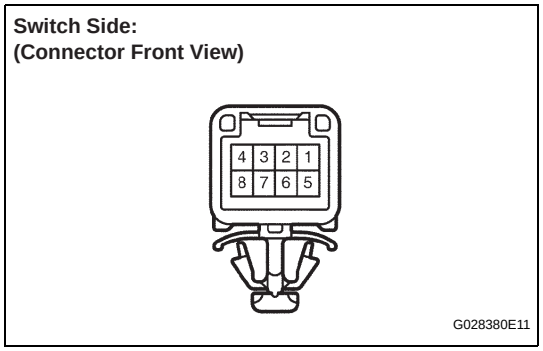

INSPECTION

1. INSPECT TRANSMISSION CONTROL SWITCH

(a) Measure the resistance according to the value(s) in the table below when the shift lever is moved to each position.

Standard resistance

Shift Position	Tester Connection	Specified Condition
4 and 3	1 - 2	Below 1 Ω
Except 4 and 3		10 kΩ or higher
L	5 - 6	Below 1 Ω
Except L		10 kΩ or higher

If the resistance value is not as specified, replace the transmission control switch.

cardiagn.com

ADJUSTMENT

1. ADJUST SHIFT LEVER POSITION

(a) Move the shift lever to the N position.

(b) Remove the nut from the control shaft lever.

(c) Disconnect the transmission control cable assembly from the control shaft lever.

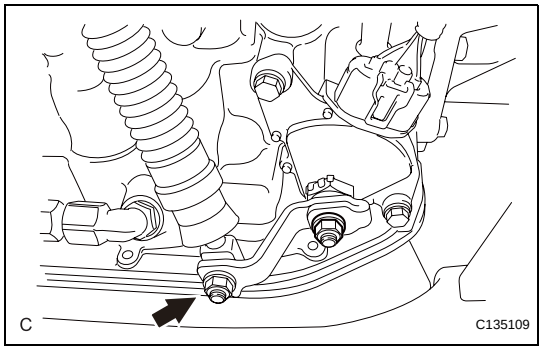

(d) Push the control shaft fully downward.

(e) Return the control shaft lever 2 notches to the N position.

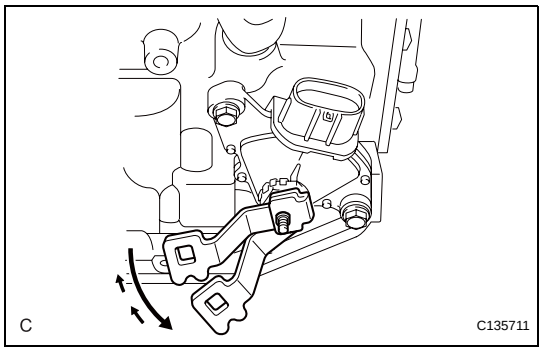

(f) Move the slider in the directions indicated by the arrows and pull up the lock piece.
NOTICE:
Do not damage the boot.

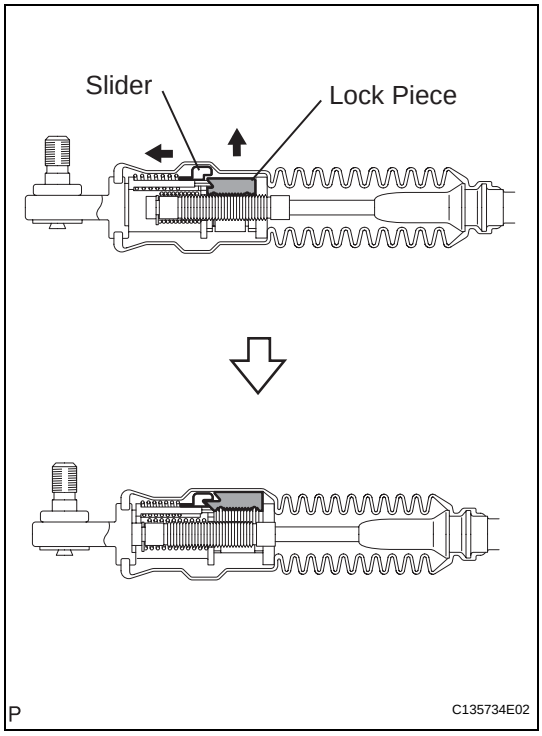

cardiagn.com

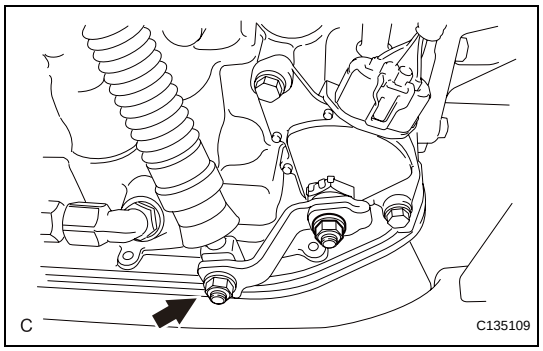

(g) Connect the transmission control cable assembly to the control shaft lever with the nut.
Torque: 15 N*m (150 kgf*cm, 11 ft.*lbf)

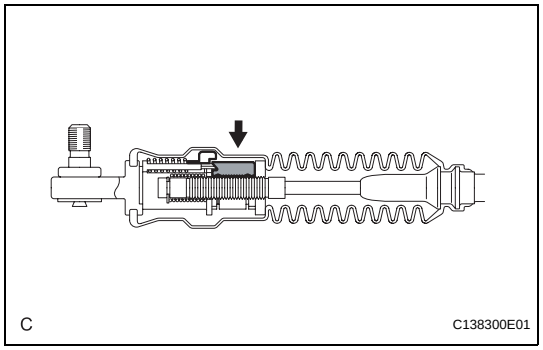

(h) Push in the lock piece.
NOTICE:
Firmly push in the lock piece until the slider lock is engaged.

(i) Start the engine and make sure that the vehicle moves forward when moving the lever from the N to the D position and moves rearward when moving it to the R position.
If it becomes hard to move the shift lever, readjust the shift lever position.

REASSEMBLY

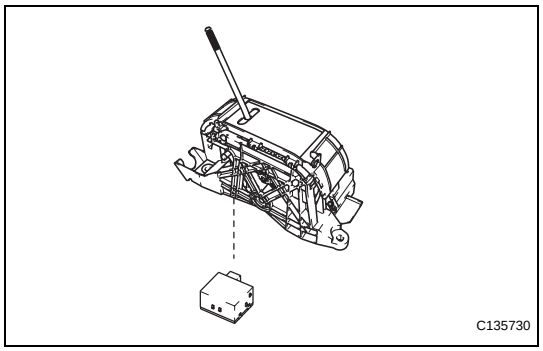

1. INSTALL SHIFT LOCK CONTROL ECU

(a) Install the shift lock control ECU to the shift lever.

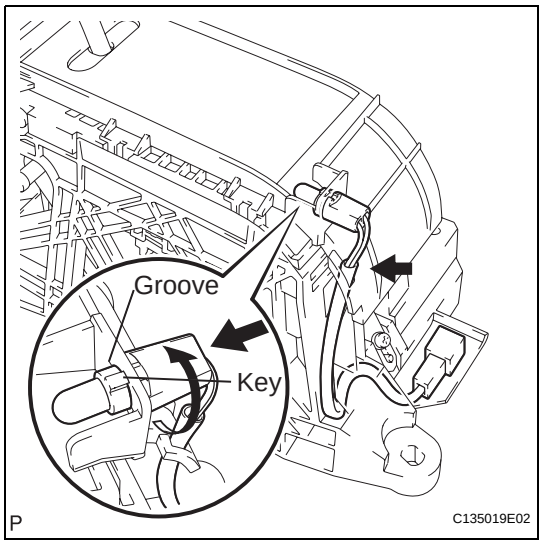

2. INSTALL INDICATOR LIGHT WIRE SUB-ASSEMBLY

(a) Insert the indicator light wire into the shift lock control unit while aligning the groove on the unit with the indicator light guide key.

(b) Install the indicator light guide by turning it clockwise until it securely locks.

(c) Install the indicator light wire to the clamp on the shift lock control unit.

cardiagn.com

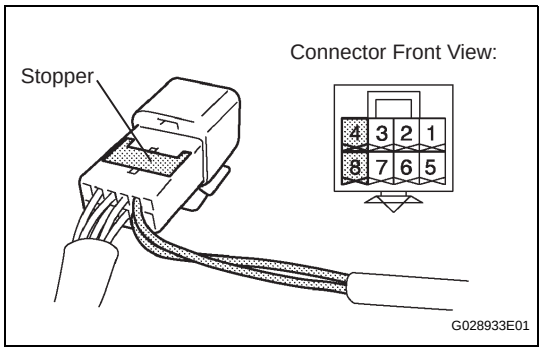

(d) Connect terminals (4) and (8) of the indicator light wire.
(e) Push the stopper.

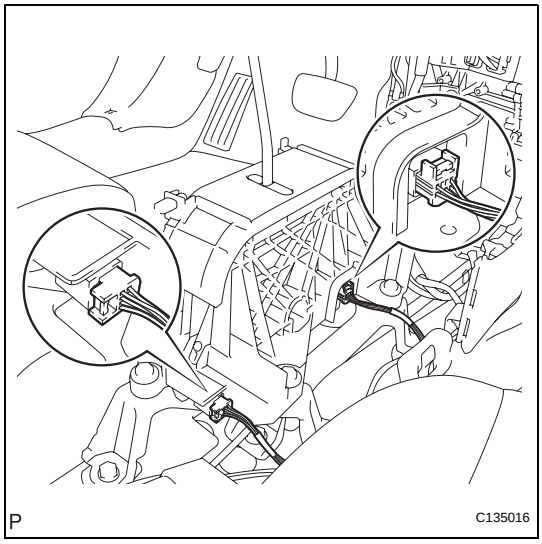

INSTALLATION

1. INSTALL SHIFT LOCK CONTROL UNIT

(a) Connect the shift lock ECU connector and transmission control switch wire connector.
(b) Install the 4 bolts and shift lock control unit.
Torque: 12 N*m (122 kgf*cm, 9 ft.*lbf)

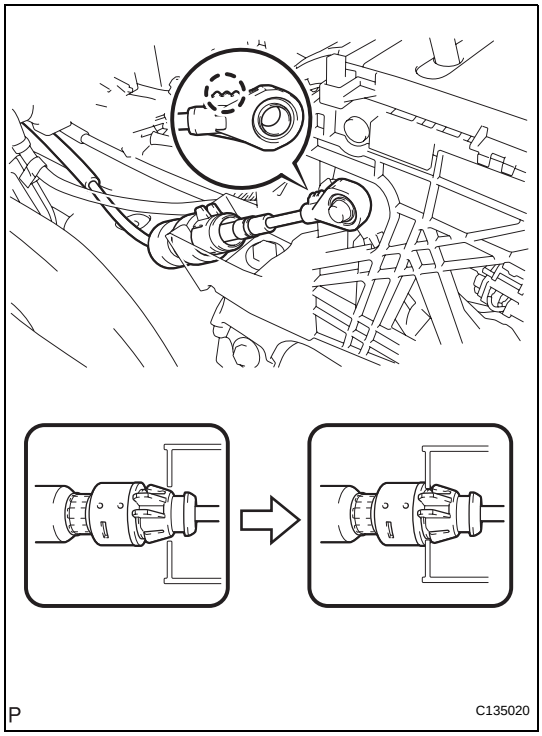

2. INSTALL TRANSMISSION CONTROL CABLE ASSEMBLY

(a) Install the transmission control cable assembly as shown in the illustration.
HINT:
- Install the floor shift cable with the uneven surface facing up.
- Securely engage the claws of the floor shift cable.

3. INSTALL FLOOR CARPET BRACKET LH

4. INSTALL NO. 2 CONSOLE BOX INSERT FRONT (for TMC Made) (See page IP-50)

5. INSTALL NO. 2 CONSOLE BOX INSERT FRONT (for TMMK Made) (See page IP-50)

6. INSTALL CONSOLE BOX ASSEMBLY (for TMC Made) (See page IP-51)

7. INSTALL CONSOLE BOX ASSEMBLY (for TMMK Made) (See page IP-51)

8. INSTALL CONSOLE BOX CARPET (See page IP-51)

9. INSTALL CONSOLE BOX POCKET (See page IP-51)

10. INSTALL UPPER CONSOLE PANEL SUB-ASSEMBLY (for TMC Made) (See page IP-52)

cardiagn.com

11. **INSTALL UPPER CONSOLE PANEL SUB-ASSEMBLY (for TMMK Made) (See page IP-52)**

12. **INSTALL UPPER CONSOLE REAR PANEL SUB-ASSEMBLY (See page IP-53)**

13. **INSTALL FLOOR SHIFT POSITION INDICATOR HOUSING SUB-ASSEMBLY (See page IP-53)**

14. **INSTALL NO. 2 INSTRUMENT CLUSTER FINISH PANEL GARNISH (See page IP-54)**

15. **INSTALL NO. 1 INSTRUMENT CLUSTER FINISH PANEL GARNISH (See page IP-55)**

16. **INSTALL SHIFT LEVER KNOB SUB-ASSEMBLY**
    (a) Install the shift lever knob sub-assembly.

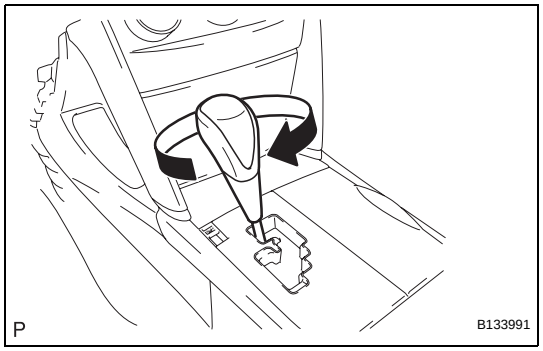

17. **INSTALL LOWER INSTRUMENT PANEL FINISH PANEL (See page IP-57)**

18. **INSTALL LOWER INSTRUMENT PANEL FINISH PANEL LH (for TMC Made) (See page IP-58)**

19. **INSTALL LOWER INSTRUMENT PANEL FINISH PANEL LH (for TMMK Made) (See page IP-59)**

20. **INSTALL COWL SIDE TRIM SUB-ASSEMBLY LH (See page IR-54)**

21. **INSTALL FRONT DOOR SCUFF PLATE LH (See page IR-54)**

22. **CONNECT CABLE TO NEGATIVE BATTERY TERMINAL**
    Torque: 6.9 N*m (70 kgf*cm, 61 in.*lbf)

23. **INSPECT SHIFT LEVER POSITION (See page AX-146)**

24. **ADJUST SHIFT LEVER POSITION (See page AX-146)**

cardiagn.com

TORQUE CONVERTER CLUTCH AND DRIVE PLATE

COMPONENTS

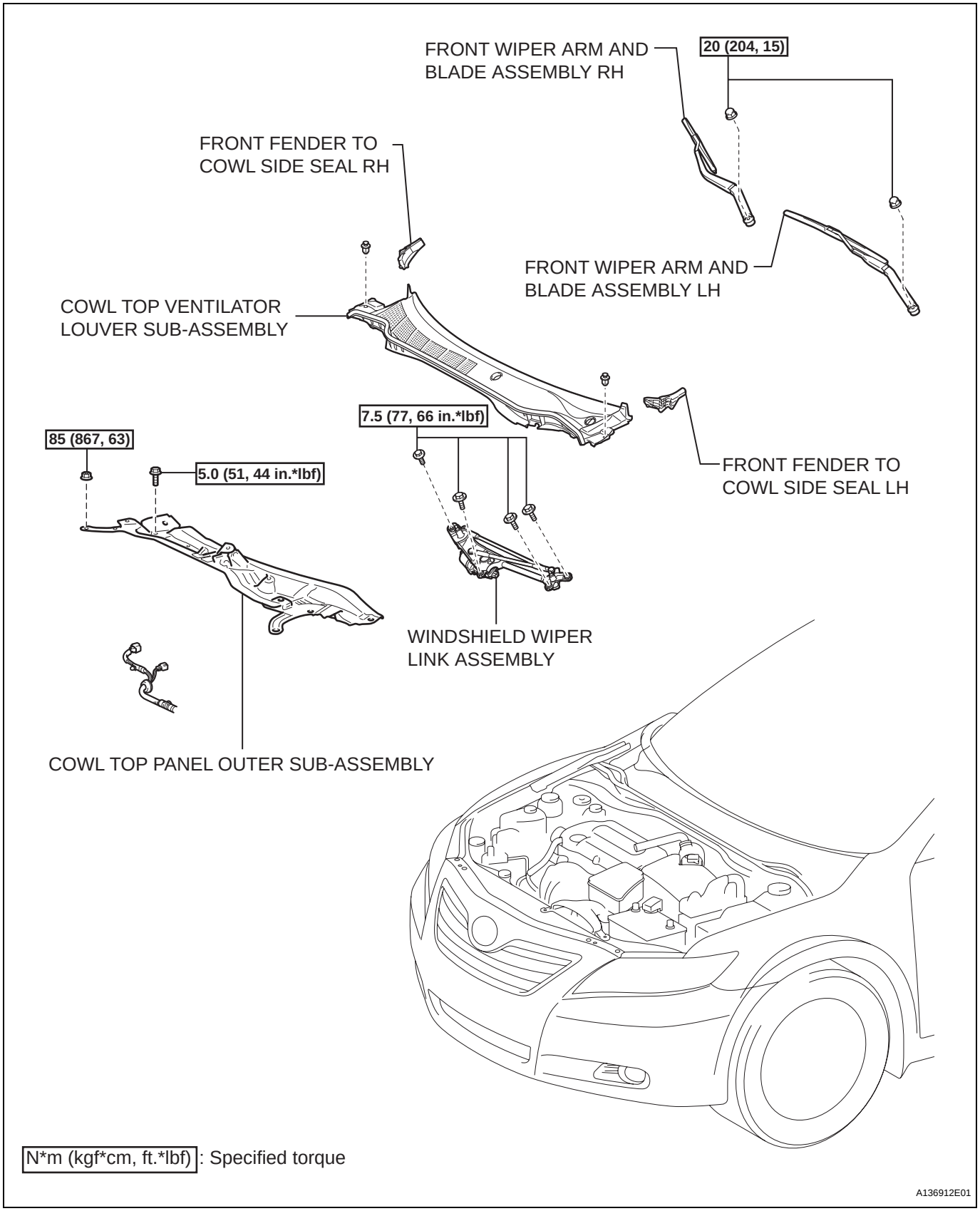

cardiagn.com

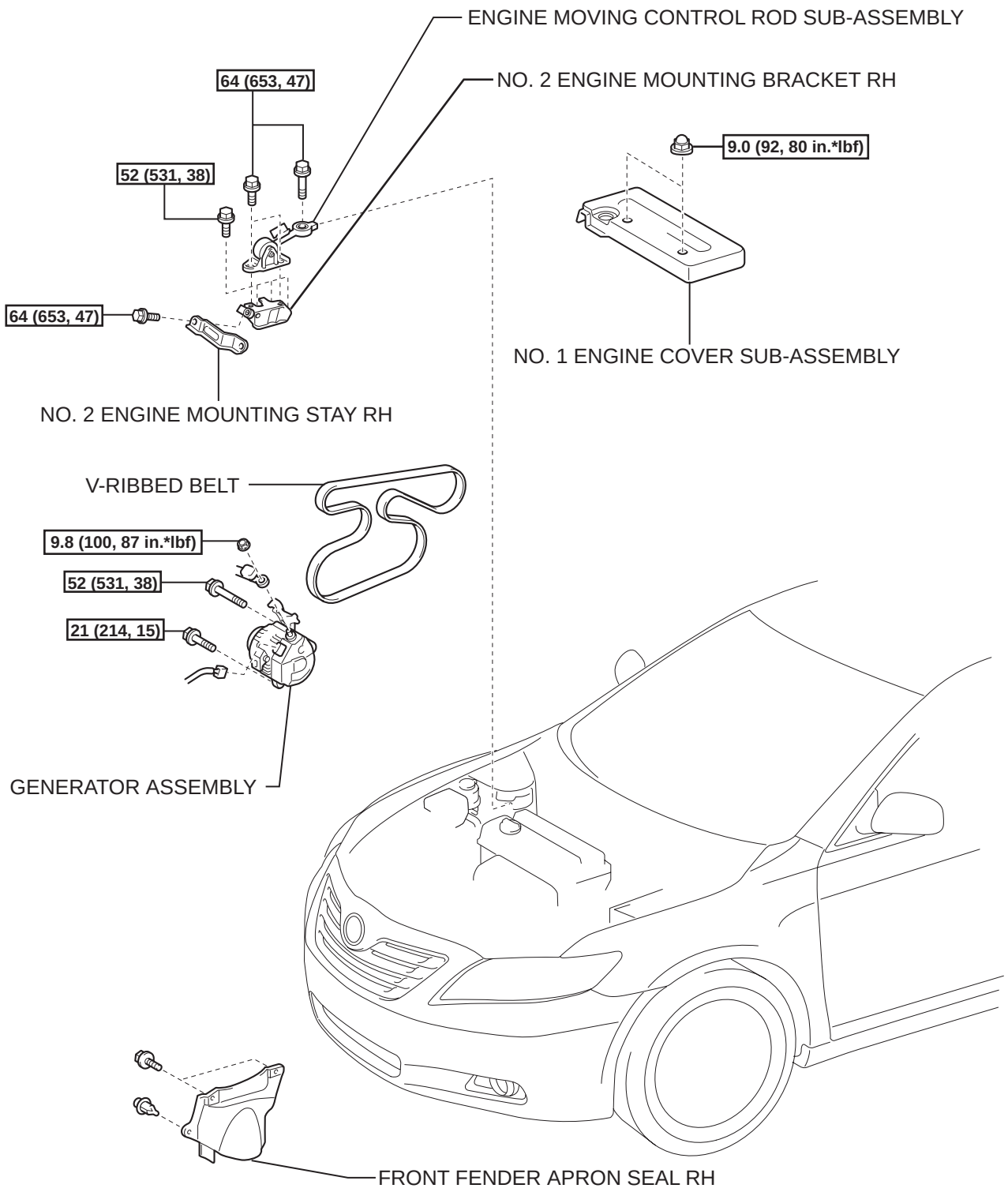

N*m (kgf*cm, ft.*lbf) : Specified torque

C

A134948E01

cardiagn.com

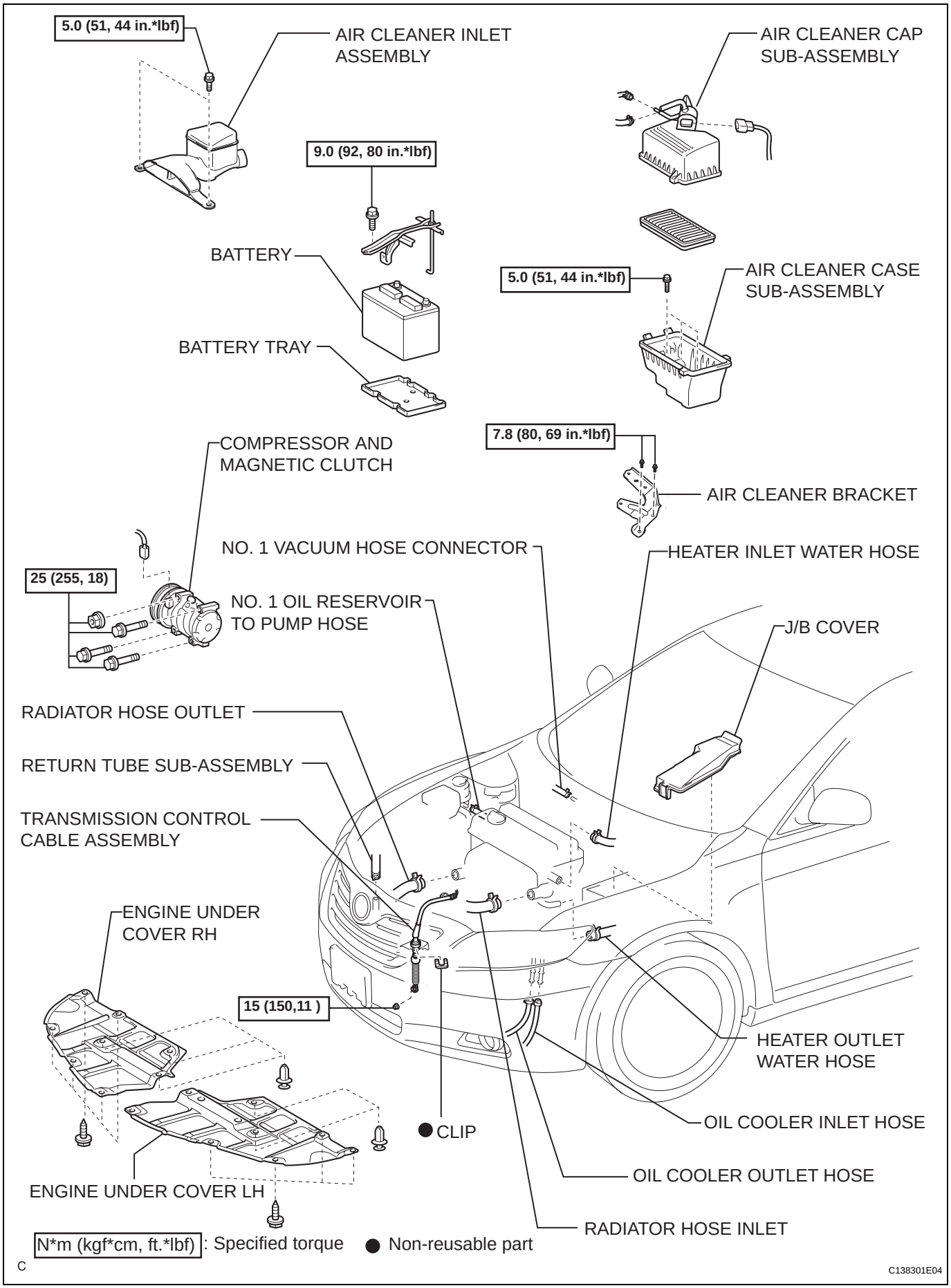

cardiagn.com

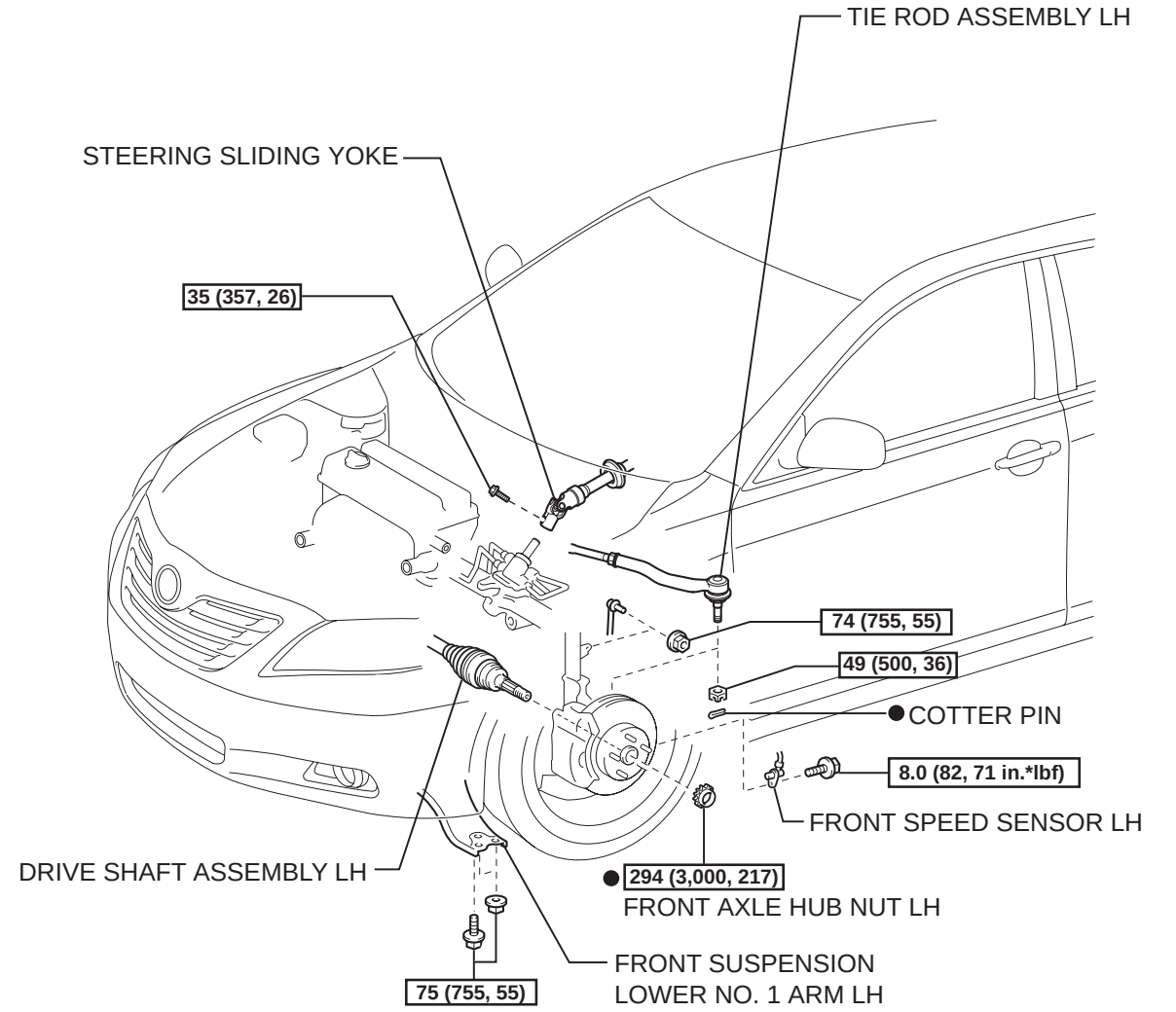

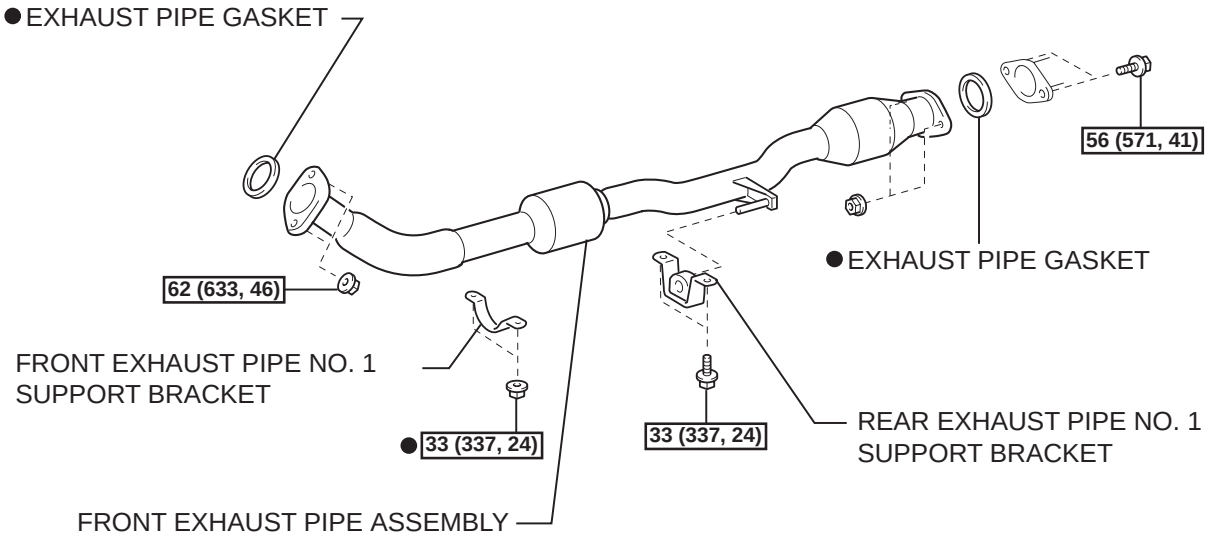

N*m (kgf*cm, ft.*lbf): Specified torque ● Non-reusable part

C

C143322E01

cardiagn.com

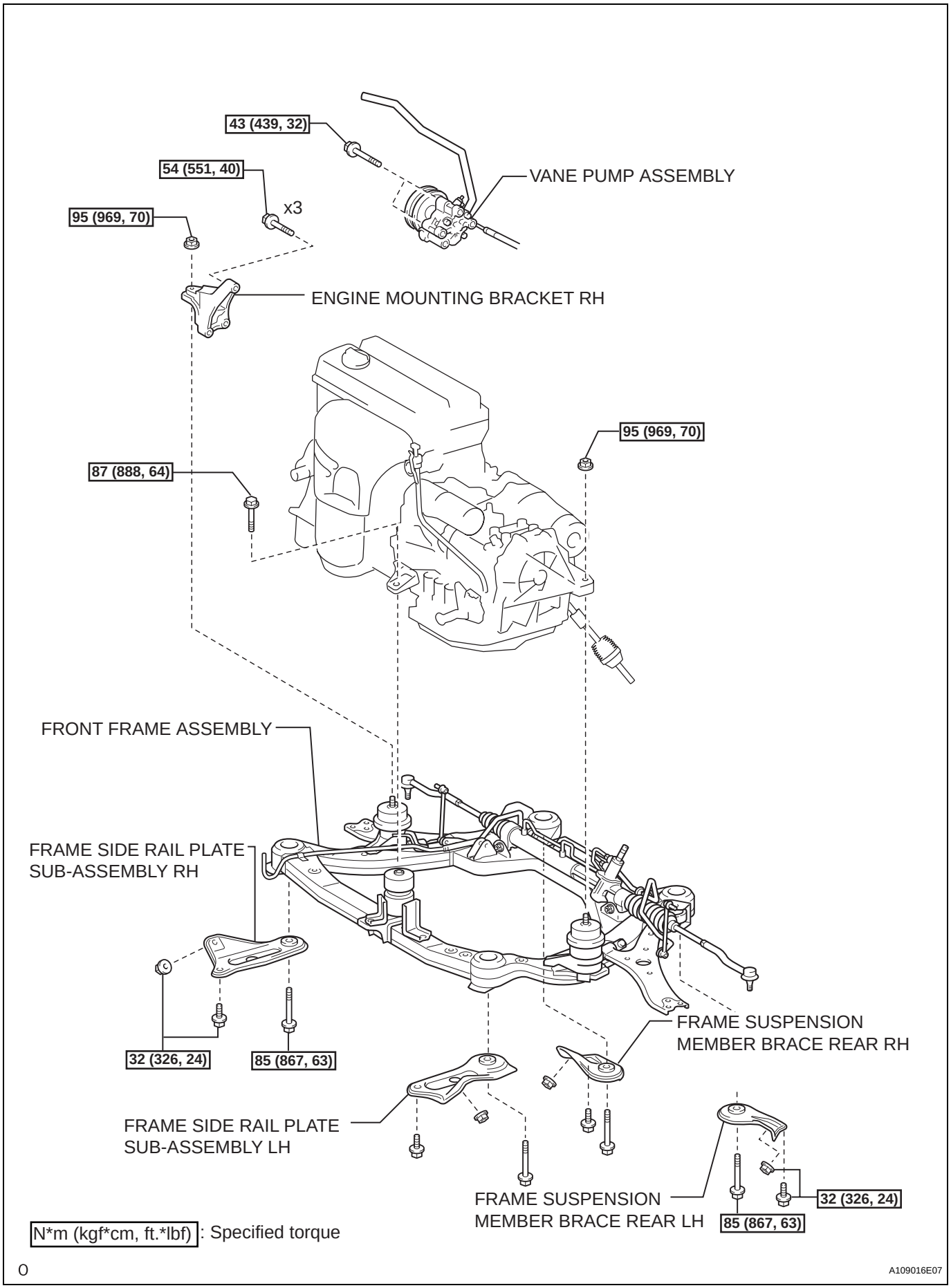

cardiagn.com

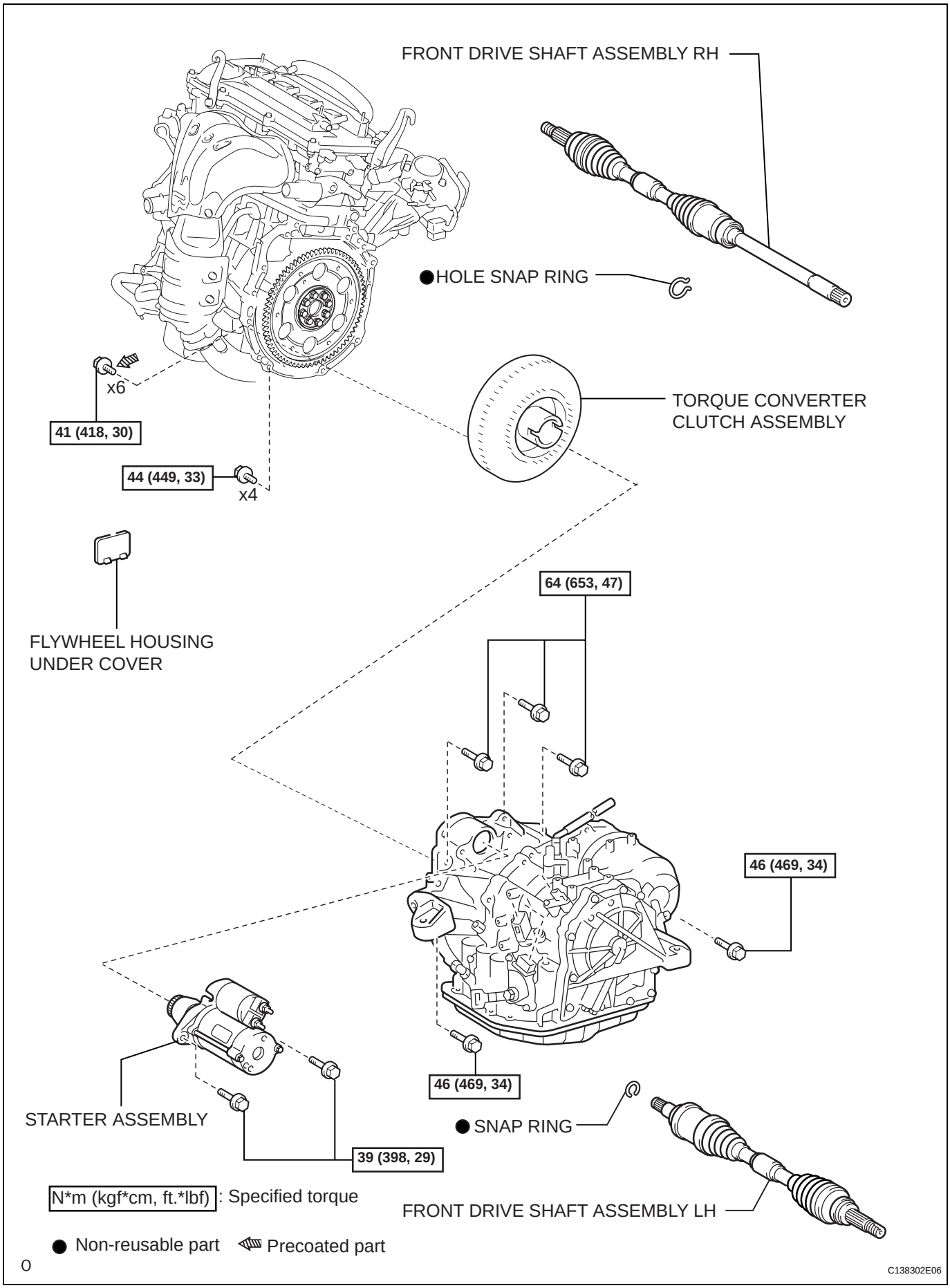

cardiagn.com

REMOVAL

1. REMOVE TORQUE CONVERTER CLUTCH ASSEMBLY

HINT:

See page AX-162.

INSPECTION

1. INSPECT TORQUE CONVERTER CLUTCH ASSEMBLY

(a) Inspect the one-way clutch.

(1) Set SST into the inner race of the one-way clutch.

SST 09350-32014 (09351-32010)

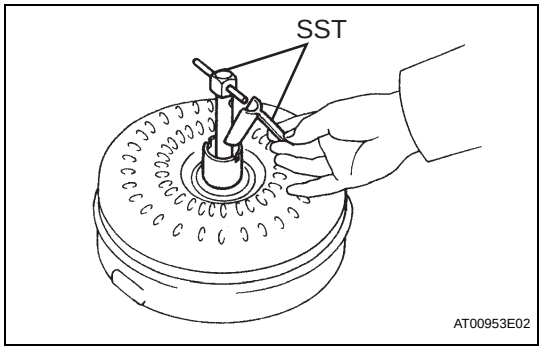

(2) Install SST so that it fits in the notch of the converter hub and outer race of the one-way clutch.

SST 09350-32014 (09351-32010, 09351-32020)

(3) Stand the torque converter up and turn the SST.

Standard:

If the one-way clutch is turned clockwise, it rotates freely and if turned counterclockwise, it locks.

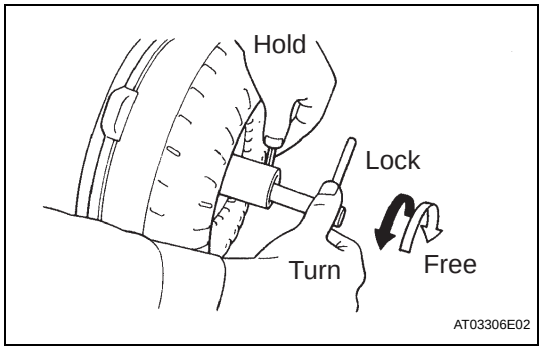

(b) Determine the condition of the torque converter clutch assembly.

(1) If the inspection result of the torque converter clutch assembly satisfies the following conditions, replace the torque converter clutch assembly.

Malfunction item:

A metallic sound is emitted from the torque converter clutch assembly during the stall test or when the shift lever is moved to the N position.

The one-way clutch is free or locked in both directions.

The amount of powder in the ATF is greater than the sample shown in the illustration (see the sample).

HINT:

The sample shows the auto fluid of approximately 0.25 liters (0.26 US qts, 0.22 Imp. qts) that is taken out from the removed torque converter clutch.

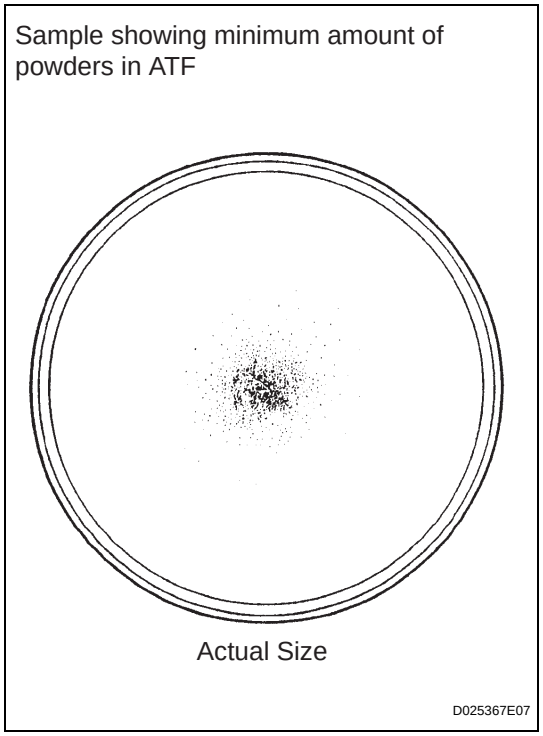

(c) Exchange the ATF in the torque converter clutch.

(1) If the ATF is discolored and/or has a foul odor, completely stir the ATF in the torque converter clutch and drain it.

cardiagn.com

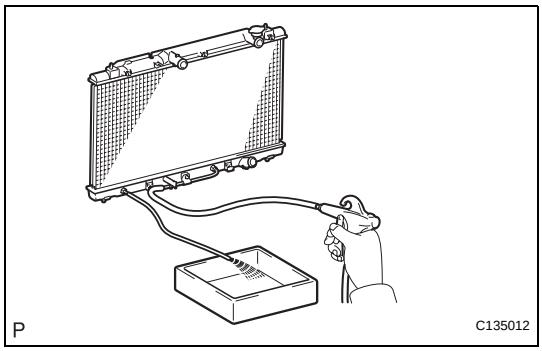

(d) Clean and check the oil cooler and oil pipe line.
   (1) If the torque converter clutch is inspected or the ATF is exchanged, clean the oil cooler and oil pipe line.
   HINT:
   - Spray compressed air of 196 kPa (2 kgf/cm^2, 28 psi) from the inlet hose.
   - If plenty of fine powders are identified in the ATF, add new ATF using a bucket pump and clean it again.
   (2) If the ATF is cloudy, inspect the oil cooler (radiator).

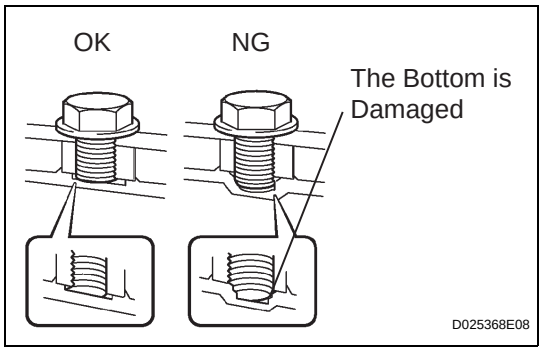

(e) Prevent deformation of the torque converter clutch and damage to the oil pump gear.
   (1) When there is any damage to the end of the bolt for the torque converter clutch and to the bottom of the bolt hole, replace the bolt and the torque converter clutch.
   (2) All of the bolts must be the same length.
   (3) Bolts with washers must be used.

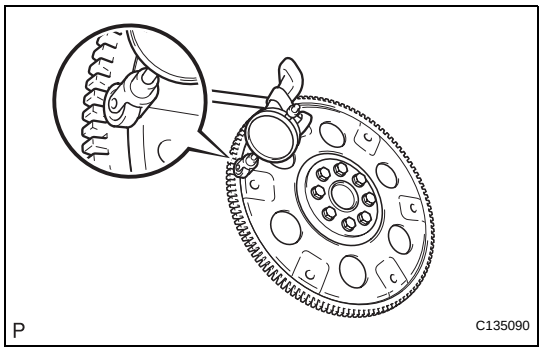

2. INSPECT DRIVE PLATE & RING GEAR SUB-ASSEMBLY

(a) Set up a dial indicator with a roller instrument and measure the drive plate runout.

(b) Check for damage of the ring gear.
   Maximum runout:
   0.20 mm (0.0079 in.)
   If runout is not within specification or the ring gear is damaged, replace the drive plate.

cardiagn.com

INSTALLATION

1. INSTALL TORQUE CONVERTER CLUTCH ASSEMBLY

HINT:

See page AX-168.

cardiagn.com

AUTOMATIC TRANSAXLE UNIT

COMPONENTS

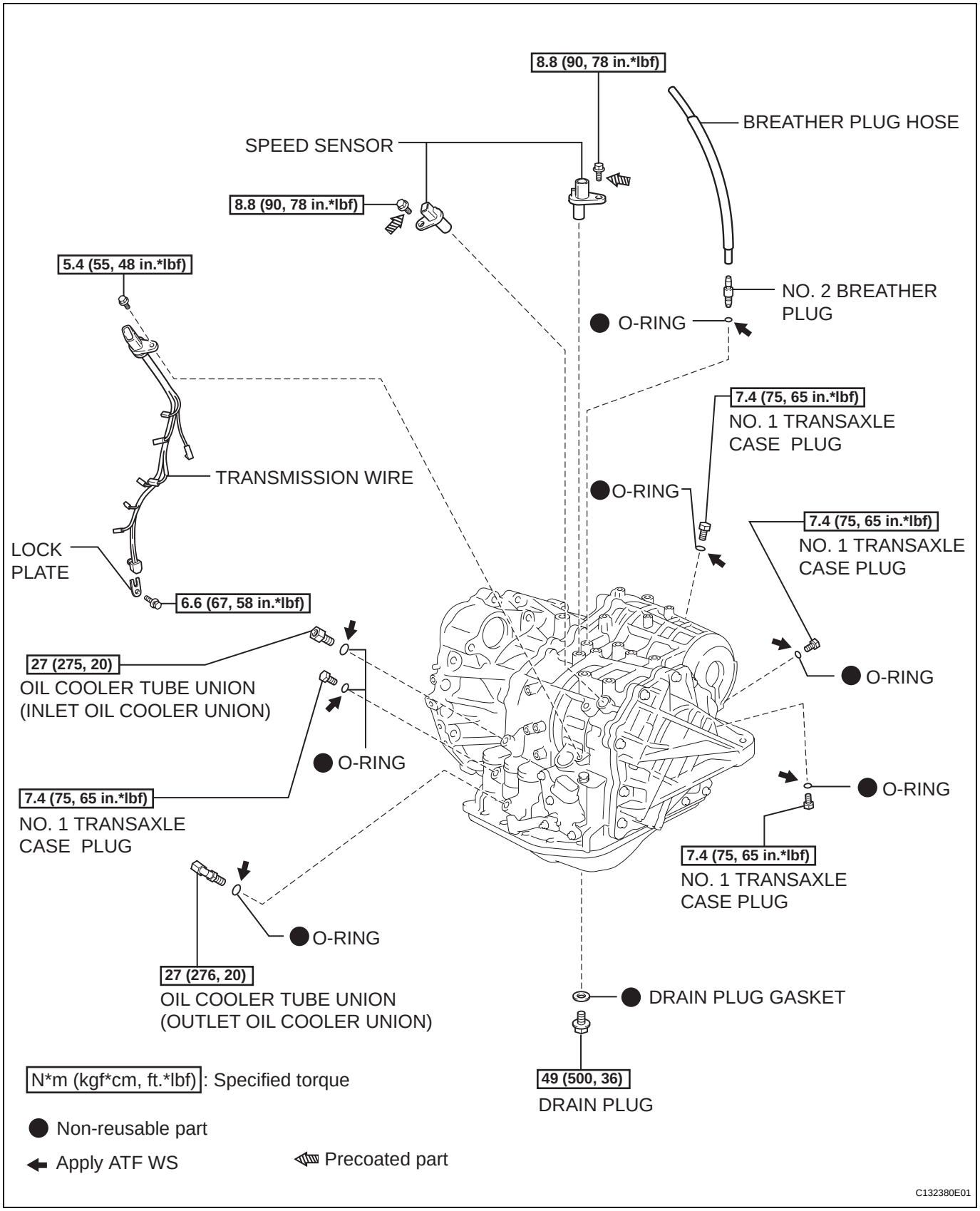

cardiagn.com

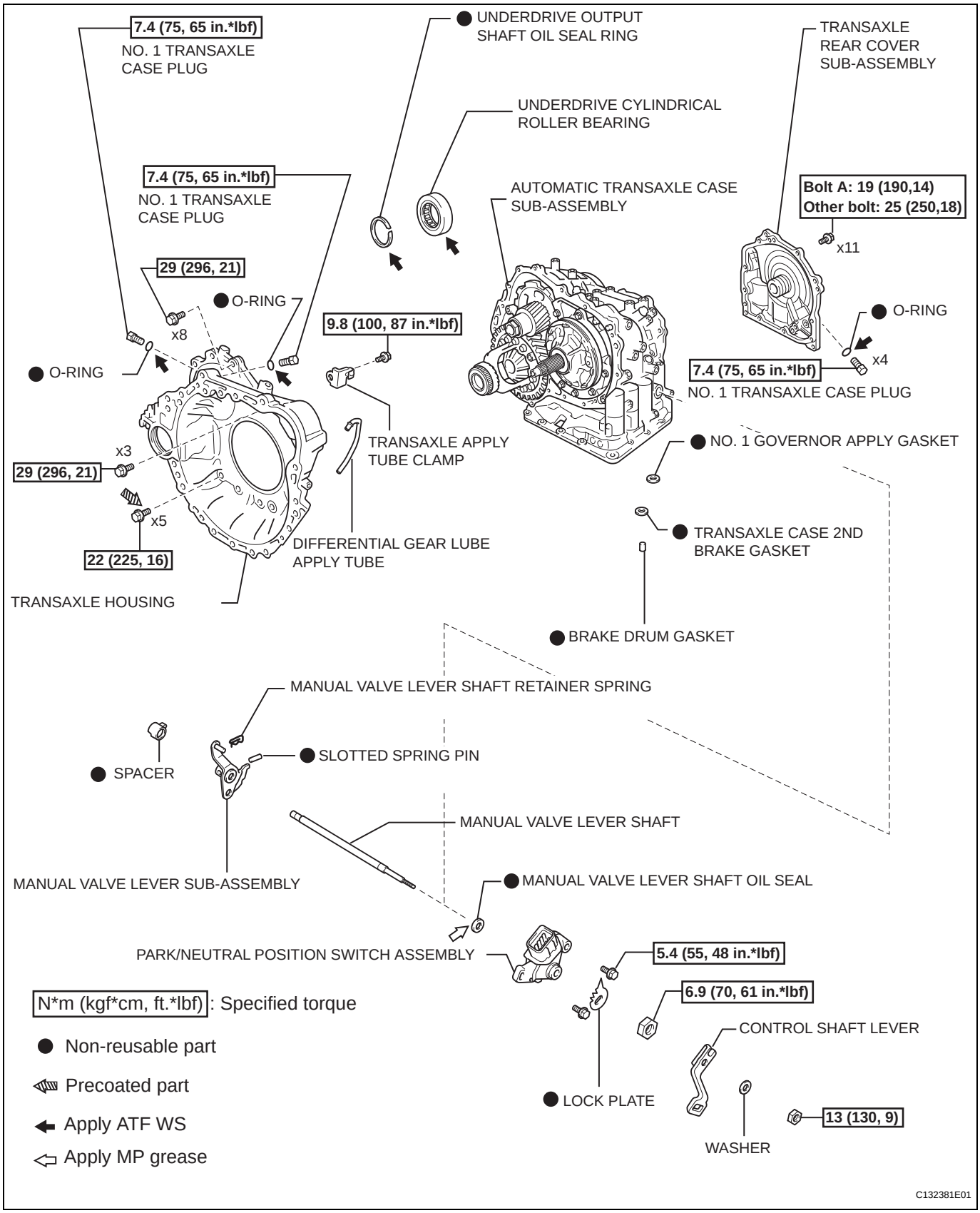

cardiagn.com

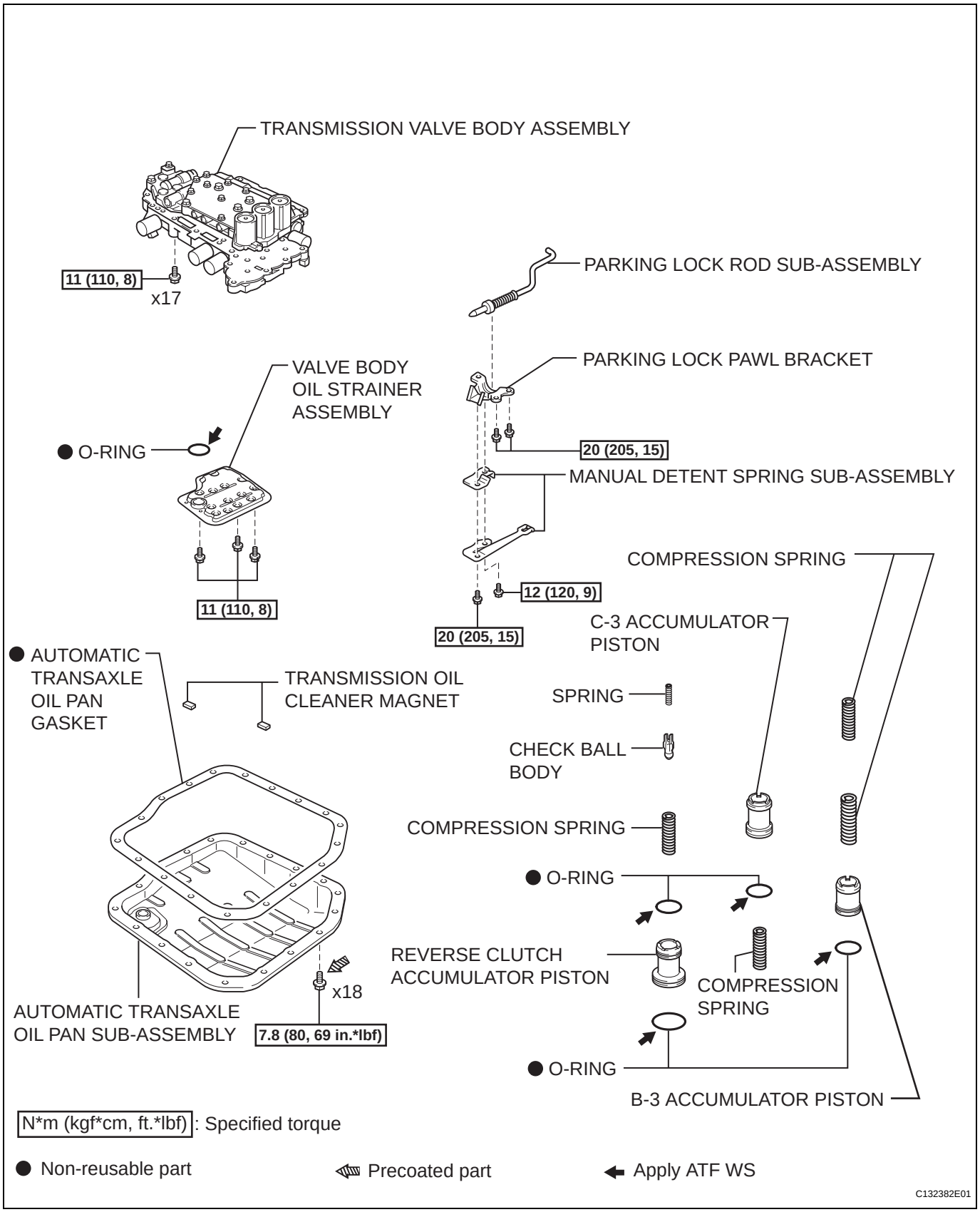

cardiagn.com

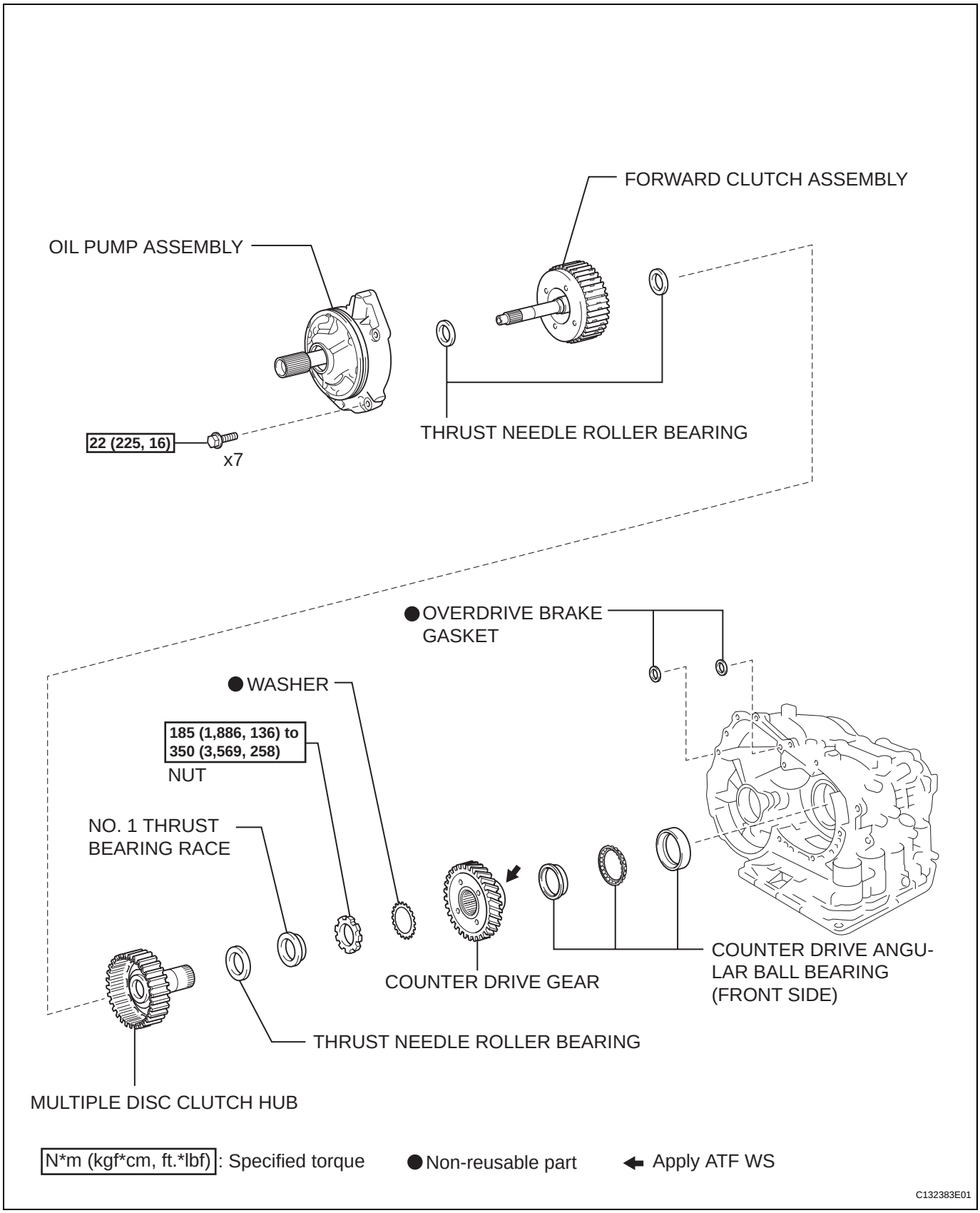

cardiagn.com

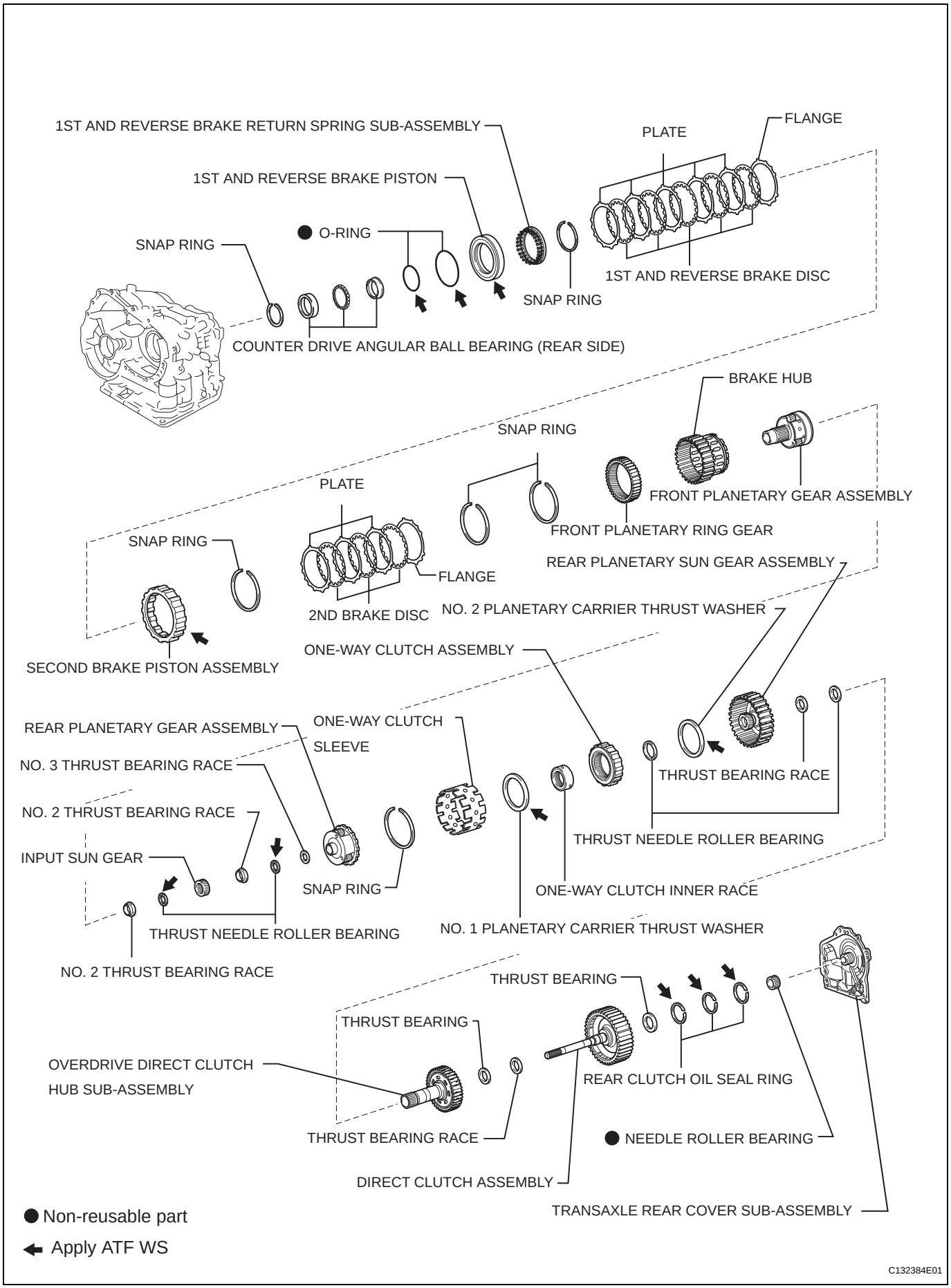

cardiagn.com

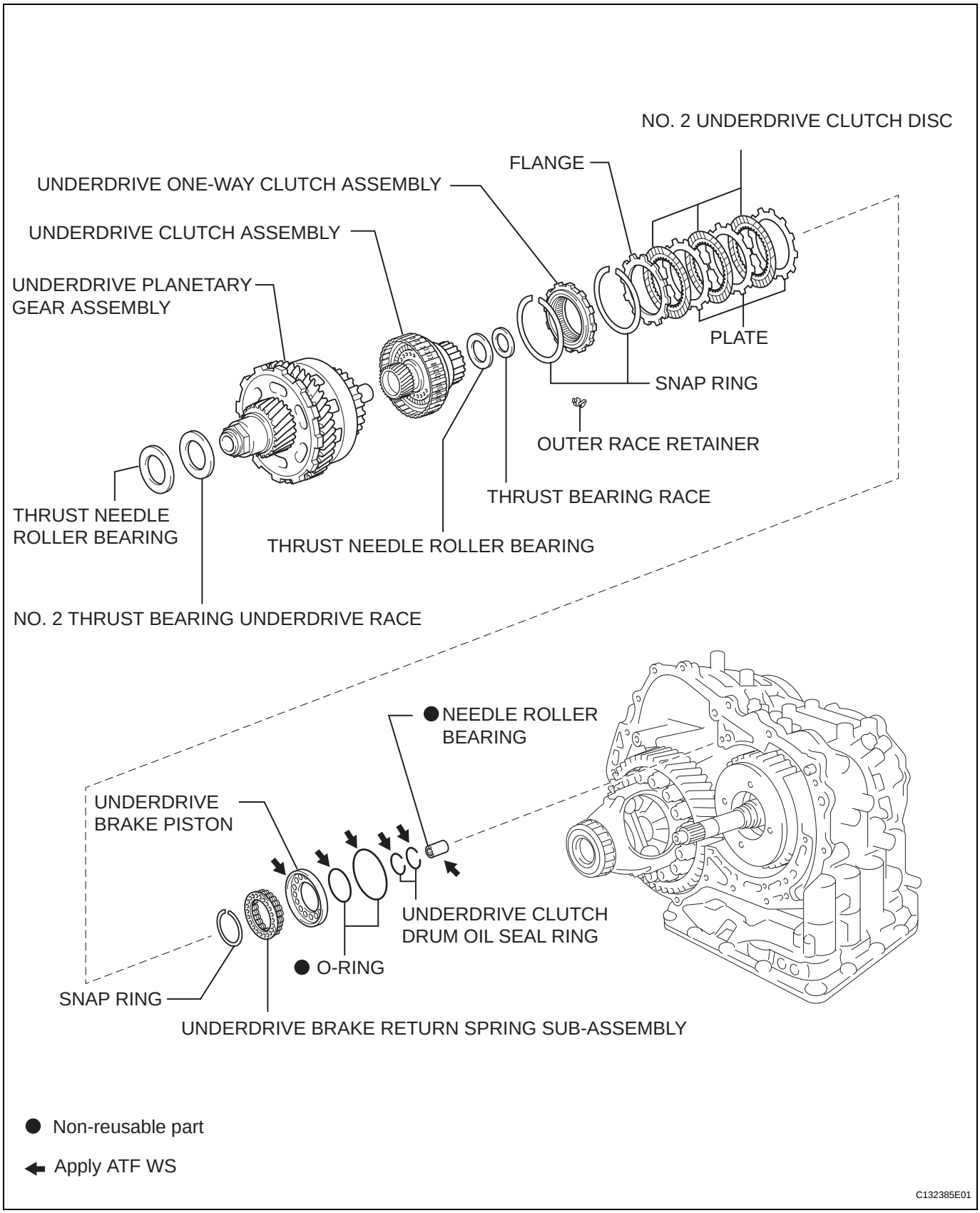

cardiagn.com

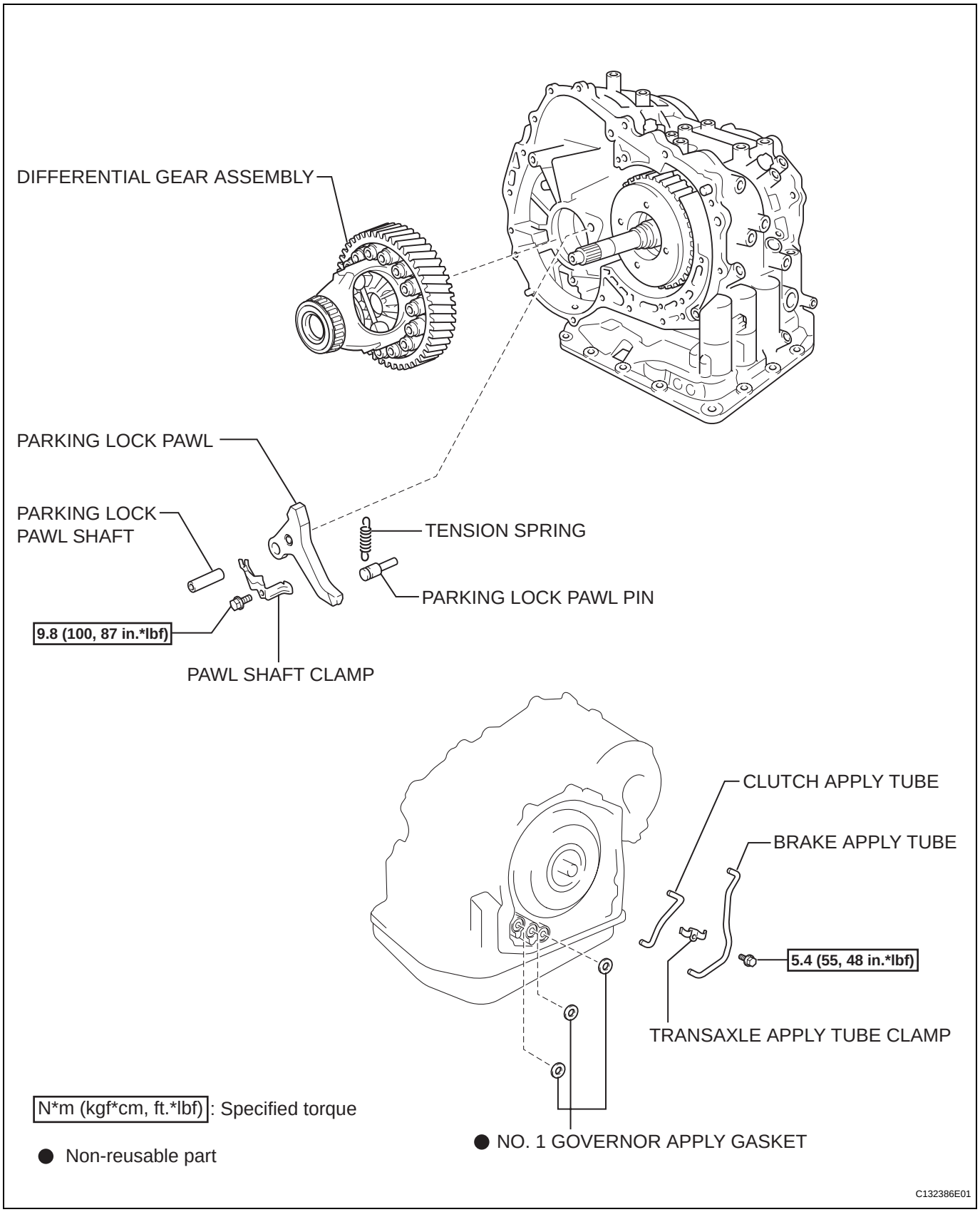

cardiagn.com

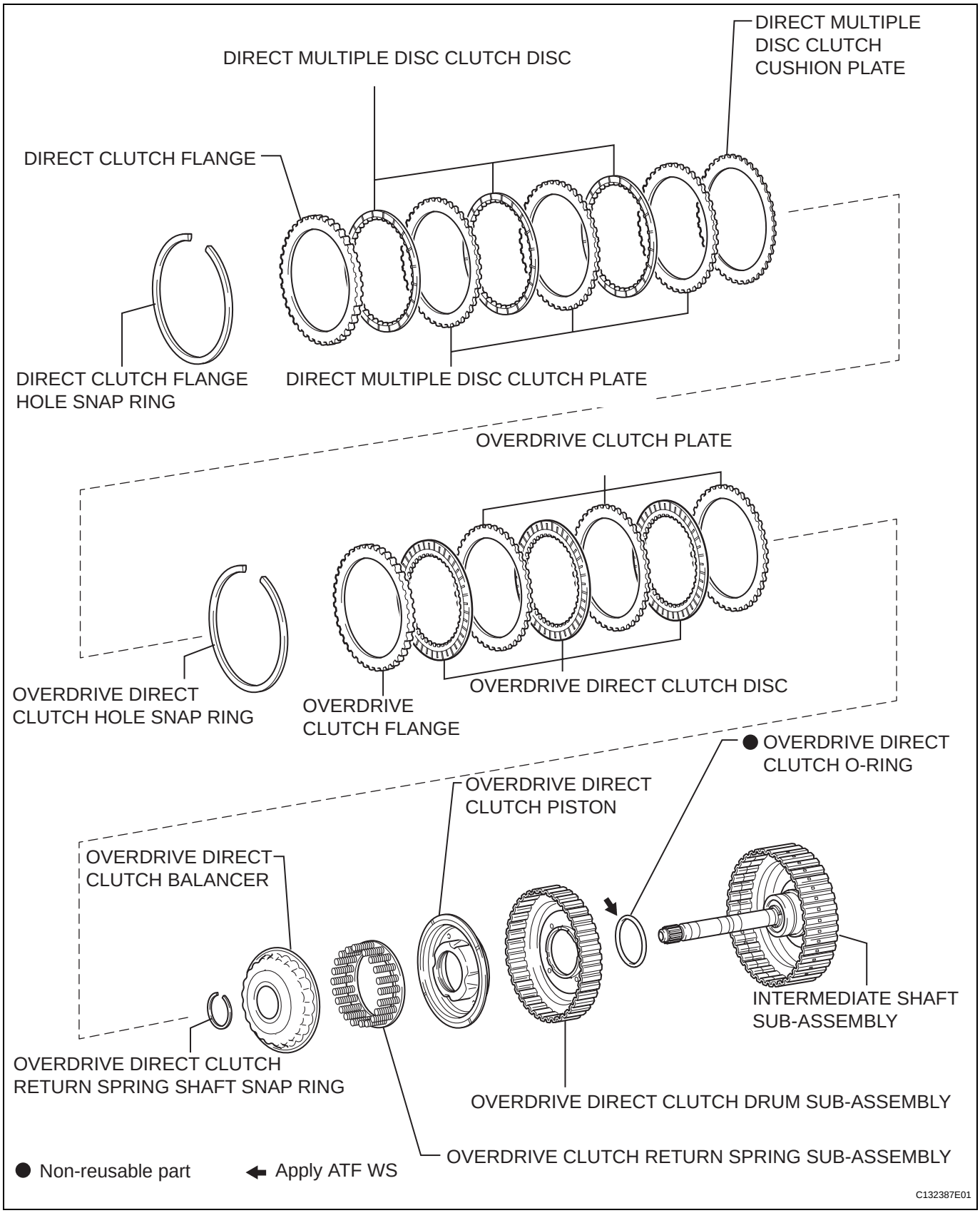

cardiagn.com

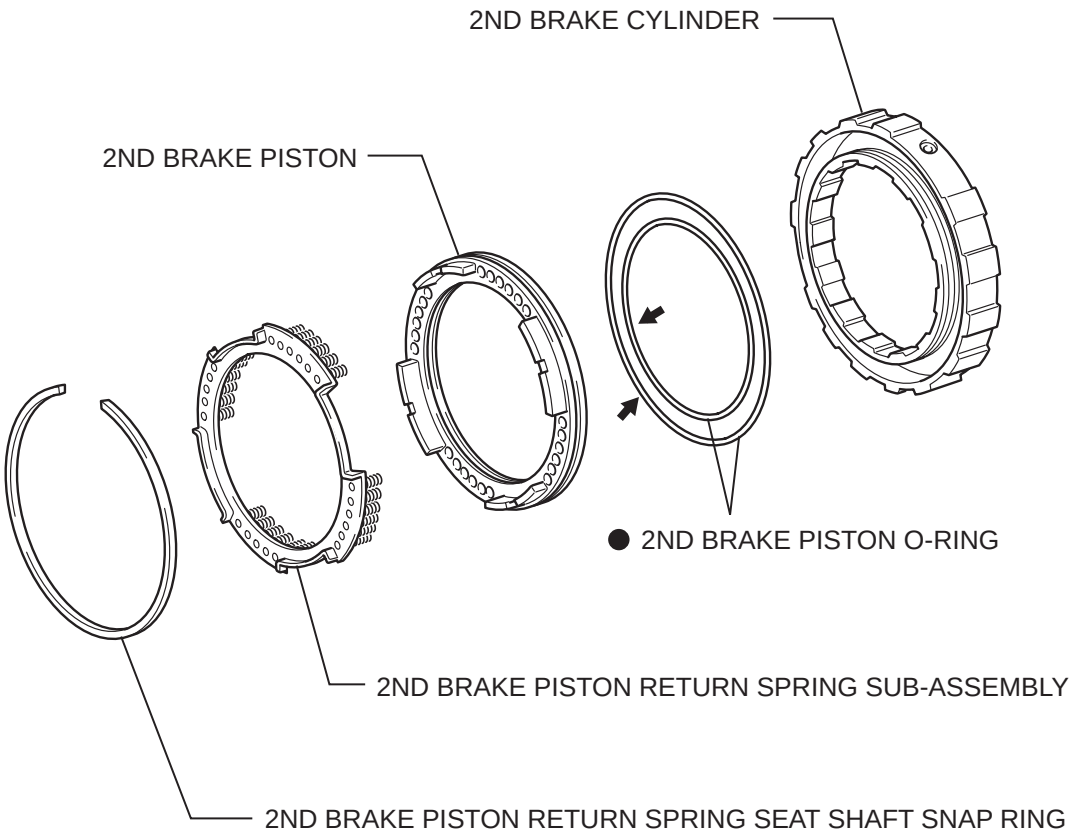

● Non-reusable part

⬅ Apply ATF WS

C132388E01

cardiagn.com

DISASSEMBLY

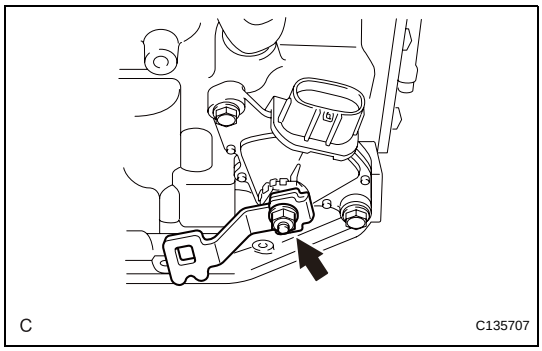

1. REMOVE PARK/NEUTRAL POSITION SWITCH ASSEMBLY

(a) Remove the nut, washer, and control shaft lever.

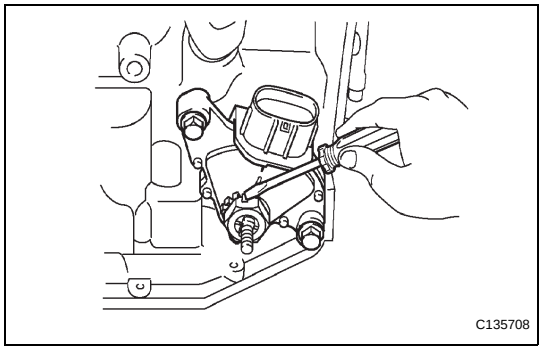

(b) Using a screwdriver, unstake the lock plate, and remove the lock nut and nut stopper.

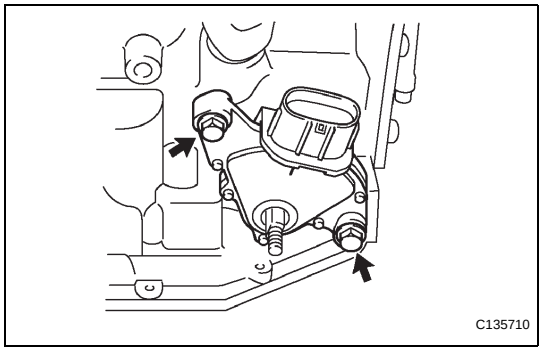

(c) Remove the 2 bolts and pull out the park/neutral position switch.

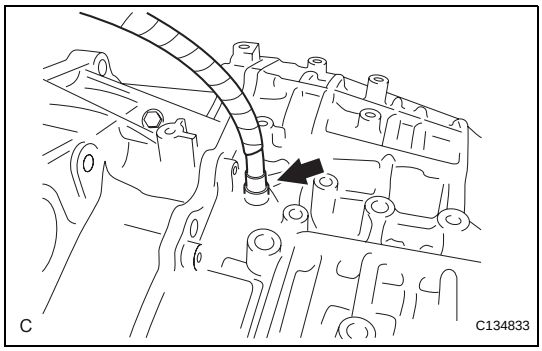

2. REMOVE NO. 2 BREATHER PLUG

(a) Remove the No. 2 breather plug from the transaxle case.

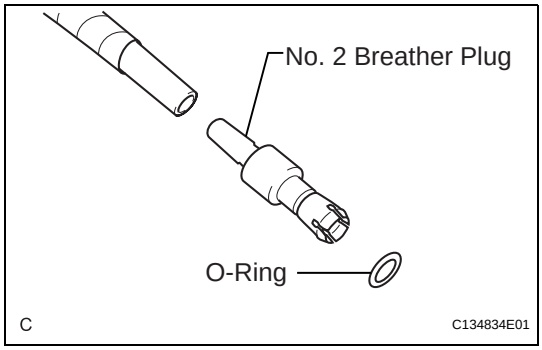

(b) Remove the hose and O-ring from the No. 2 breather plug.

cardiagn.com

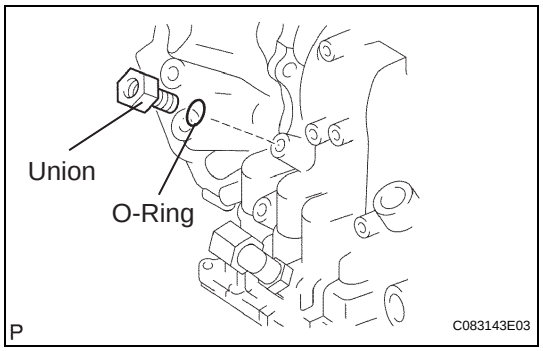

3. REMOVE OIL COOLER TUBE UNION (INLET OIL COOLER UNION)
(a) Remove the union.
(b) Remove the O-ring from the union.

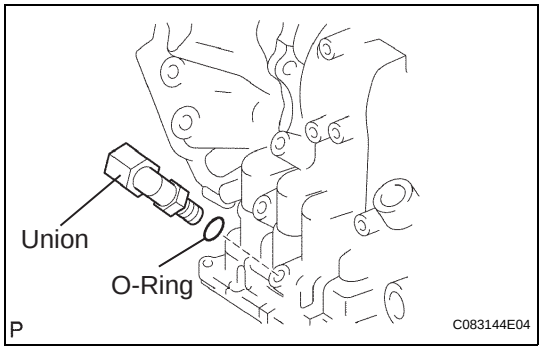

4. REMOVE OIL COOLER TUBE UNION (OUTLET OIL COOLER UNION)
(a) Remove the union.
(b) Remove the O-ring from the union.

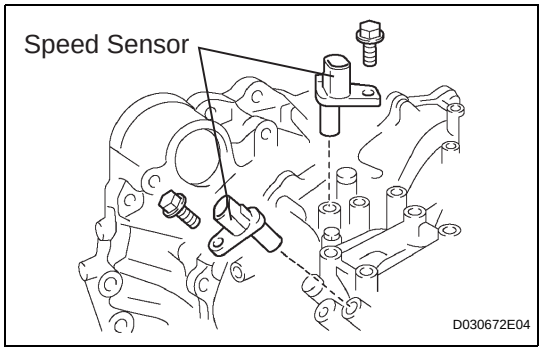

5. REMOVE SPEED SENSOR
(a) Remove the 2 bolts and the 2 speed sensors from the transaxle assembly.

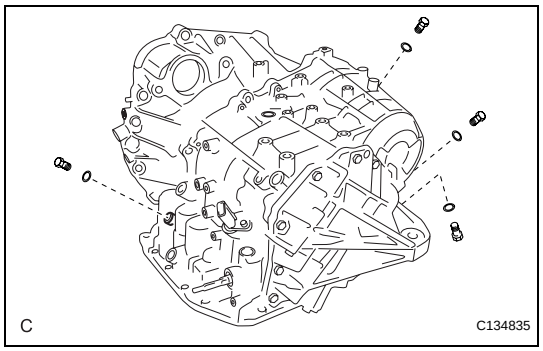

6. REMOVE NO. 1 TRANSAXLE CASE PLUG
(a) Remove the 4 No. 1 transaxle case plugs from the transaxle case.
(b) Remove the 4 O-rings from the 4 No. 1 transaxle case plugs.

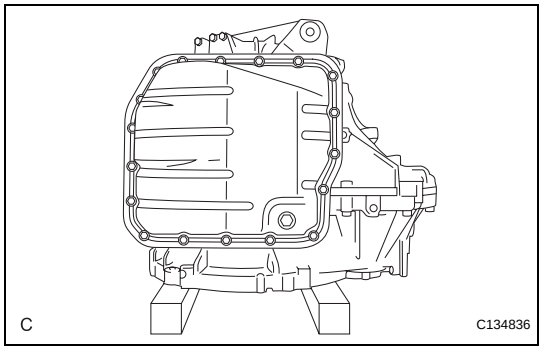

7. FIX AUTOMATIC TRANSAXLE ASSEMBLY
(a) Fix the transaxle assembly.

8. REMOVE AUTOMATIC TRANSAXLE OIL PAN SUB-ASSEMBLY
(a) Remove the drain plug and drain plug gasket from the oil pan.

cardiagn.com

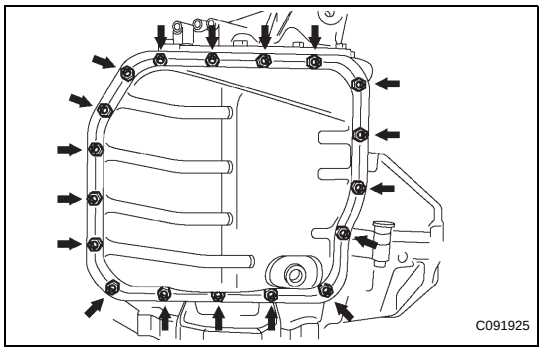

(b) Remove the 18 bolts, oil pan, and gasket.

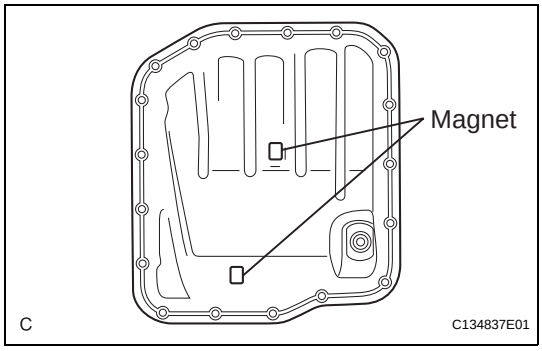

(c) Remove the 2 transmission oil cleaner magnets from the oil pan.

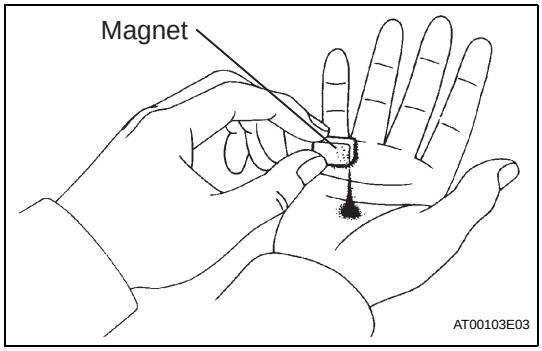

9. INSPECT TRANSMISSION OIL CLEANER MAGNET

(a) Remove the magnets and use them to collect any steel chips. Examine the chips and particles in the pan and on the magnet to determine what type of wear has occurred in the transaxle:

Result:

Steel (magnetic):
bearing, gear, and plate wear

Brass (non-magnetic):
bushing wear

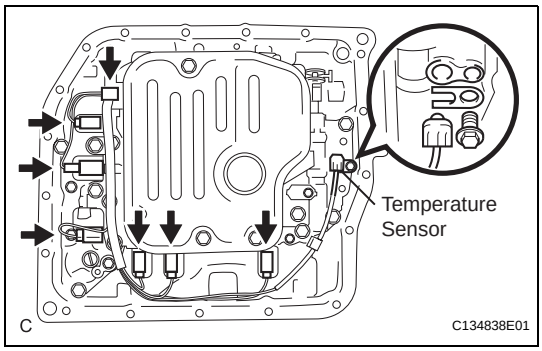

10. DISCONNECT TRANSMISSION WIRE

(a) Disconnect the 7 connectors from the shift solenoid valves.

(b) Remove the bolt, lock plate, and ATF temperature sensor.

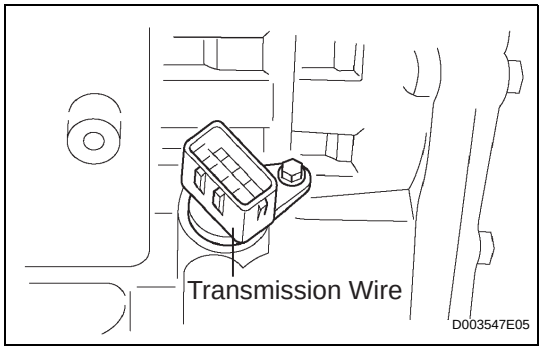

11. REMOVE TRANSMISSION WIRE

(a) Remove the bolt and transmission wire from the transaxle case.

cardiagn.com

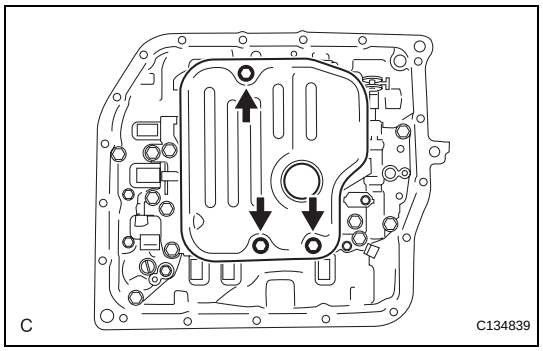

12. REMOVE VALVE BODY OIL STRAINER ASSEMBLY

(a) Remove the 3 bolts and oil strainer.

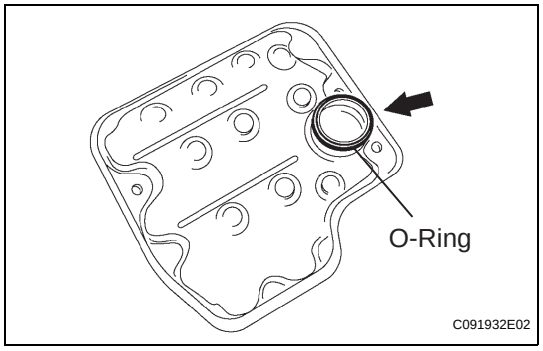

(b) Remove the O-ring from the oil strainer.

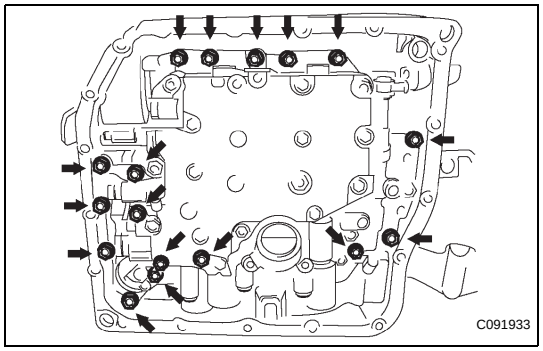

13. REMOVE TRANSMISSION VALVE BODY ASSEMBLY

(a) Support the valve body assembly and remove the 17 bolts and valve body assembly.

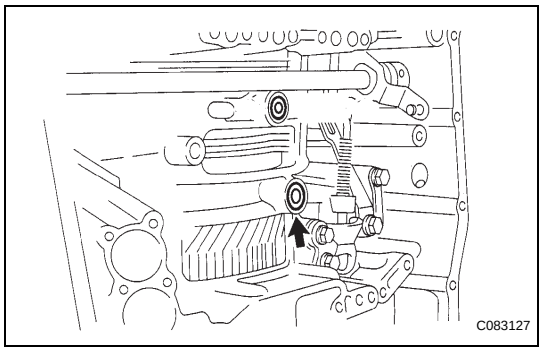

14. REMOVE NO. 1 GOVERNOR APPLY GASKET

(a) Remove the No. 1 governor apply gasket from the transaxle case.

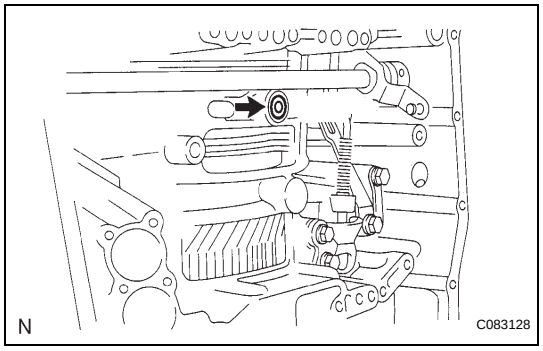

15. REMOVE TRANSAXLE CASE 2ND BRAKE GASKET

(a) Remove the transaxle case 2nd brake gasket from the transaxle case.

cardiagn.com

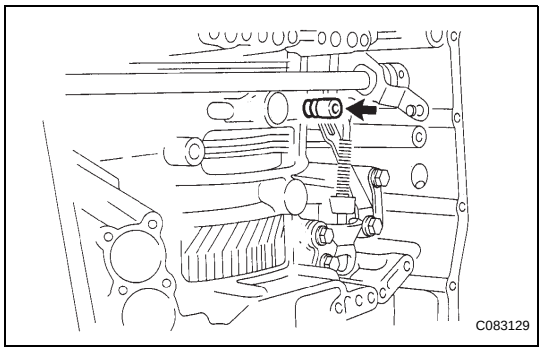

16. REMOVE BRAKE DRUM GASKET

(a) Remove the brake drum gasket from the transaxle case.

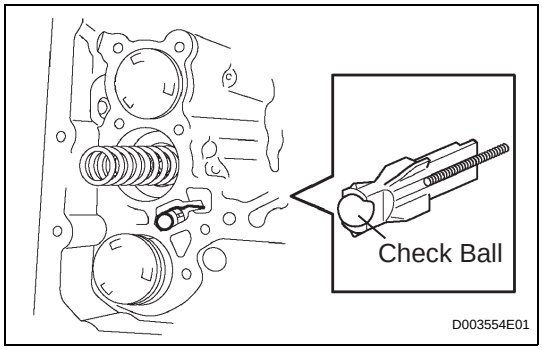

17. REMOVE CHECK BALL BODY

(a) Remove the check ball body and spring from the transaxle case.

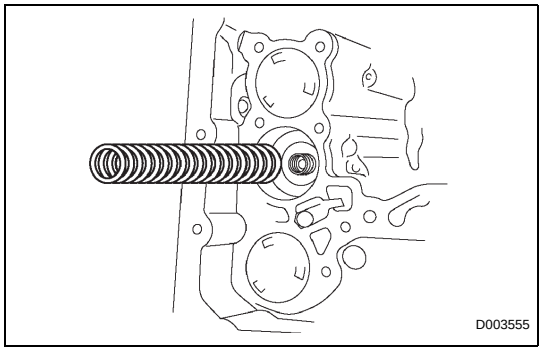

18. REMOVE C-3 ACCUMULATOR PISTON

(a) Remove the spring from the C-3 accumulator piston.

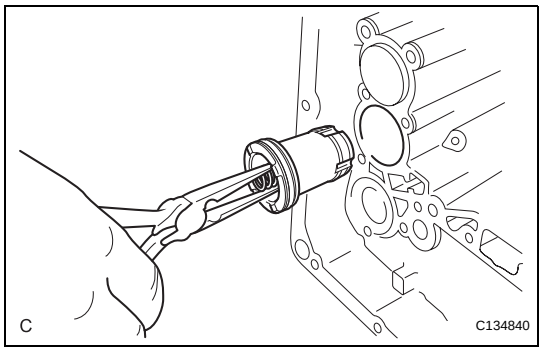

(b) Using needle-nose pliers, remove the the C-3 accumulator piston from the transaxle case.

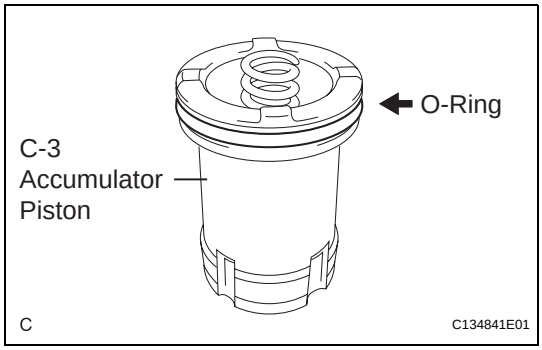

(c) Remove the O-ring from the C-3 accumulator piston.

cardiagn.com

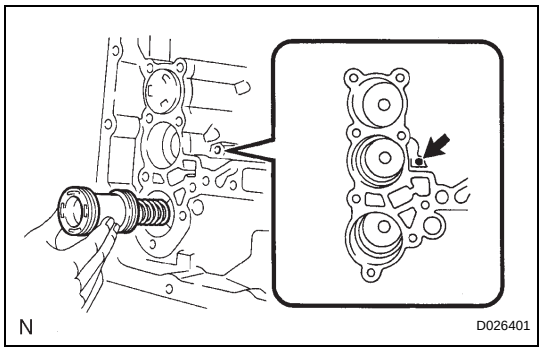

19. REMOVE REVERSE CLUTCH ACCUMULATOR PISTON

(a) Apply compressed air (392 kPa, 4.0 kgf/cm^2, 57 psi) to the oil hole and remove the reverse accumulator piston and spring.

NOTICE:

- **Applying compressed air may cause the piston to jump-out. When removing the piston, hold it by hand using a waste cloth.**
- **Take care not to splash ATF when applying the air.**

(b) Remove the 2 O-rings from the reverse clutch accumulator piston.

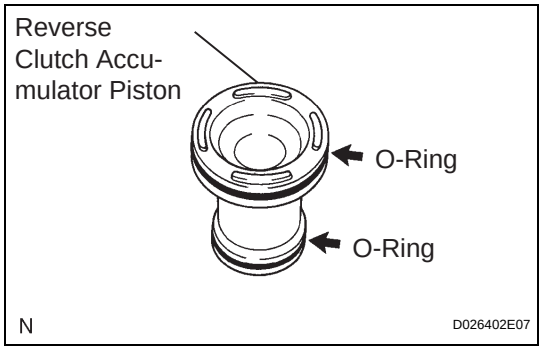

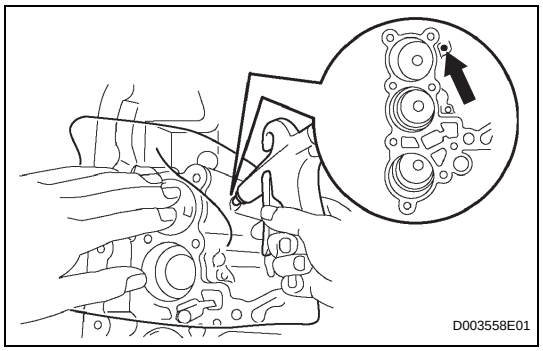

20. REMOVE B-3 ACCUMULATOR PISTON

(a) Apply compressed air (392 kPa, 4.0 kgf/cm^2, 57 psi) to the oil hole and remove the B-3 accumulator piston and 2 springs.

NOTICE:

- **Applying compressed air may cause the piston to jump-out. When removing the piston, hold it by hand using a waste cloth.**
- **Take care not to splash ATF when applying the air.**

(b) Remove the O-ring from the B-3 accumulator piston.

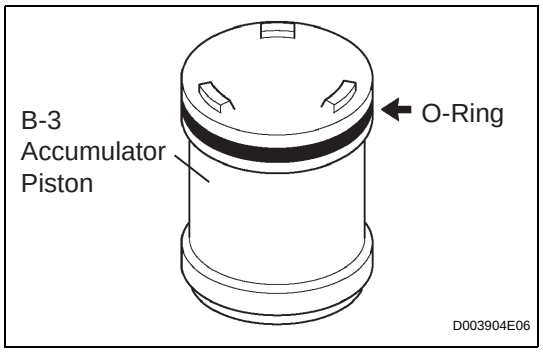

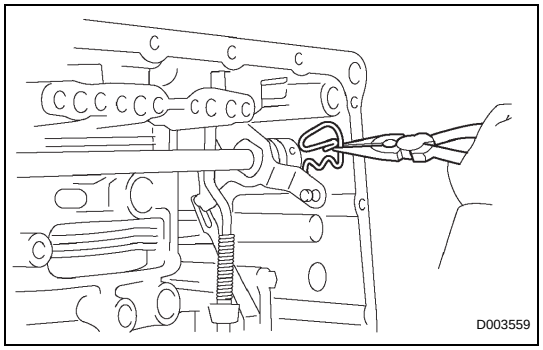

21. REMOVE MANUAL VALVE LEVER SHAFT RETAINER SPRING

(a) Using needle-nose pliers, remove the manual valve lever shaft retainer spring.

cardiagn.com

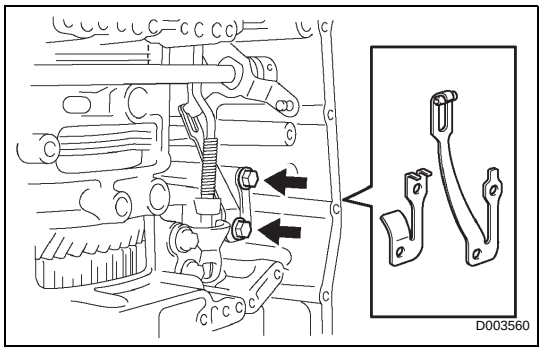

22. REMOVE MANUAL DETENT SPRING SUB-ASSEMBLY

(a) Remove the 2 bolts and manual detent spring sub-assembly.

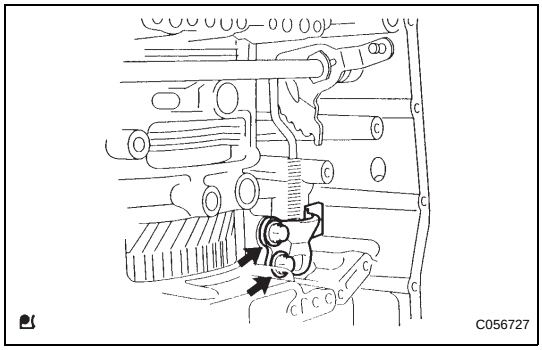

23. REMOVE PARKING LOCK PAWL BRACKET

(a) Remove the 2 bolts and parking lock pawl bracket.

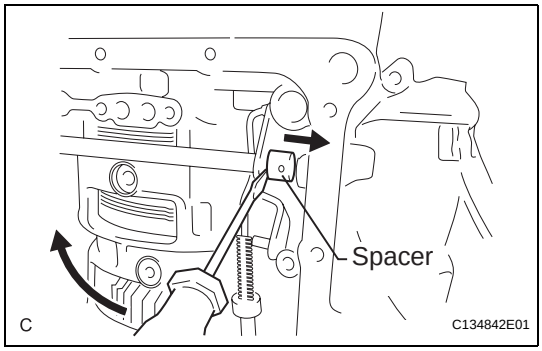

24. REMOVE MANUAL VALVE LEVER SUB-ASSEMBLY

(a) Using a screwdriver, slide the spacer.

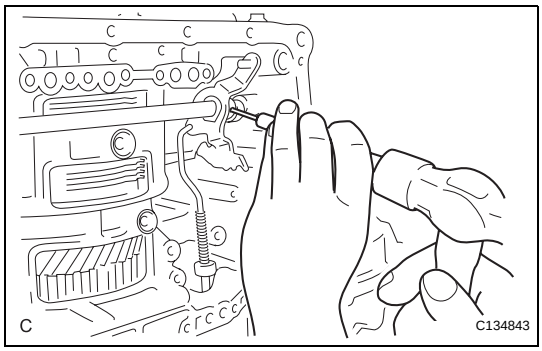

(b) Using a pin punch (ϕ3 mm) and hammer, drive out the pin.
HINT:
Slowly drive out the pin so that it will not fall into the transaxle case.

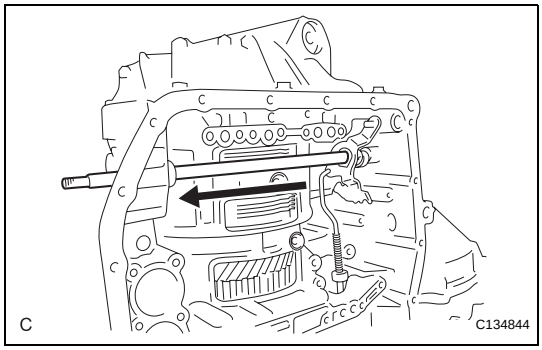

(c) Remove the manual valve lever shaft, manual valve lever, and spacer.

cardiagn.com

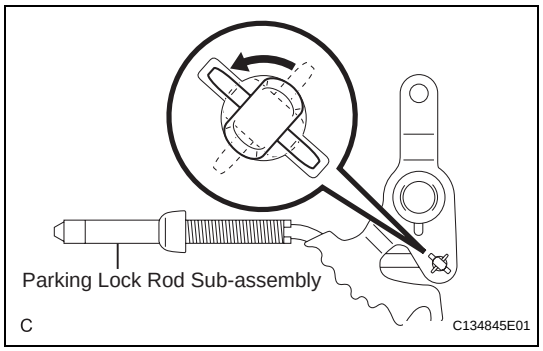

25. REMOVE PARKING LOCK ROD SUB-ASSEMBLY

(a) Remove the parking lock rod sub-assembly from the manual valve lever sub-assembly.
HINT:
Align the dial with the notches on the manual valve lever sub-assembly to remove the parking lock rod sub-assembly.

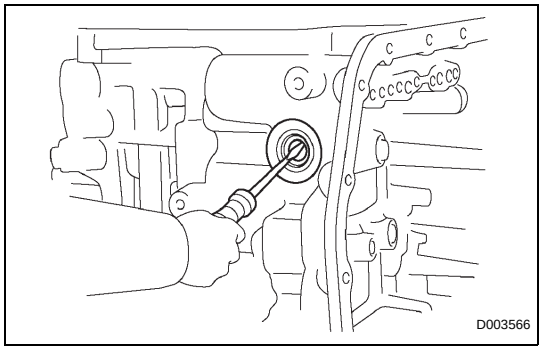

26. REMOVE MANUAL VALVE LEVER SHAFT OIL SEAL

(a) Using a screwdriver, remove the oil seal from the transaxle case.

27. FIX AUTOMATIC TRANSAXLE ASSEMBLY

(a) Fix the transaxle case with the oil pump side facing up.

28. INSPECT INPUT SHAFT END PLAY (See page AX-231)

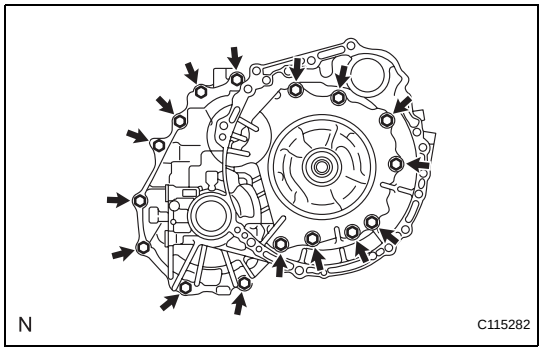

29. REMOVE TRANSAXLE HOUSING

(a) Remove the 16 bolts.
(b) Tap on the circumference of the transaxle housing with a plastic hammer to remove the transaxle housing from the transaxle case.
NOTICE:
The differential may be accidentally removed when the transaxle housing is removed.

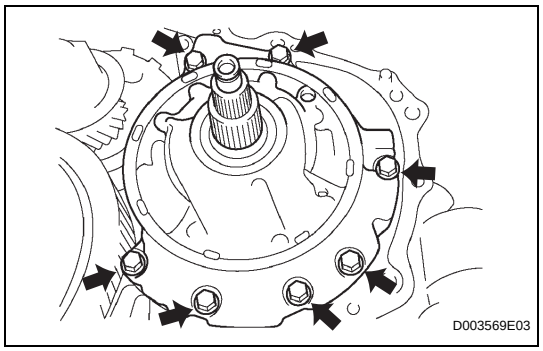

30. REMOVE OIL PUMP ASSEMBLY

(a) Remove the 7 bolts and oil pump from the transaxle case.

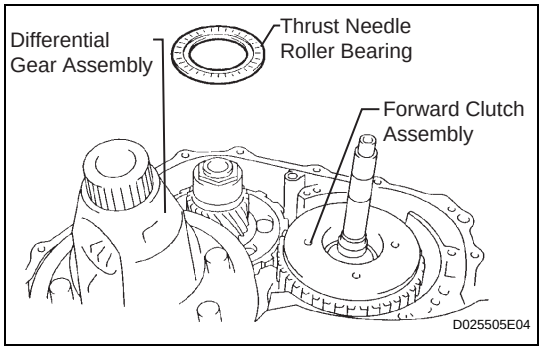

31. REMOVE THRUST NEEDLE ROLLER BEARING

(a) Remove the thrust needle roller bearing from the underdrive planetary gear assembly.

cardiagn.com

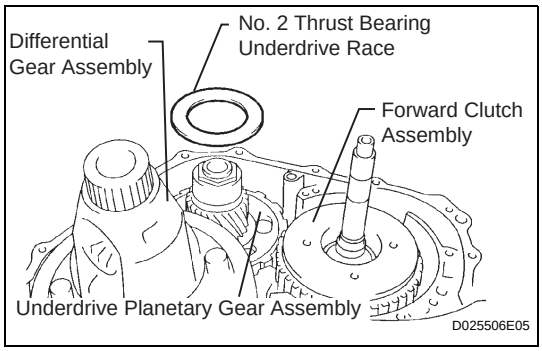

32. REMOVE NO. 2 THRUST BEARING UNDERDRIVE RACE

(a) Remove the No. 2 thrust bearing underdrive race from the underdrive planetary gear assembly.

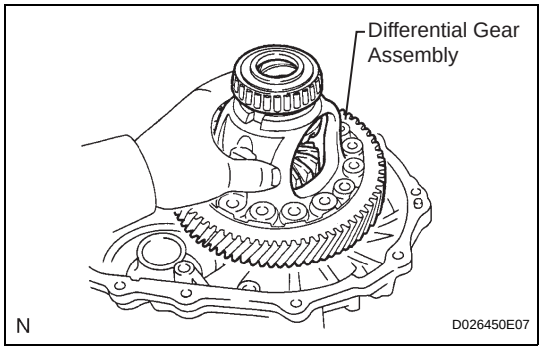

33. REMOVE DIFFERENTIAL GEAR ASSEMBLY

(a) Remove the differential gear assembly from the transaxle case.

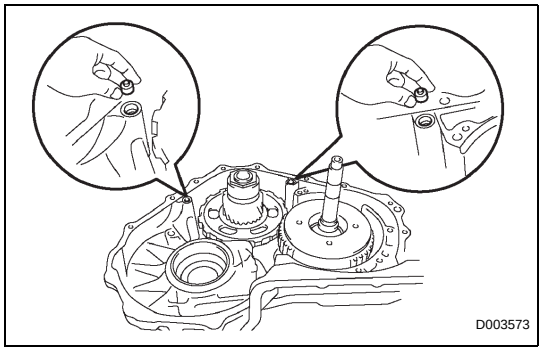

34. REMOVE OVERDRIVE BRAKE GASKET

(a) Remove the 2 overdrive brake gaskets from the transaxle case.

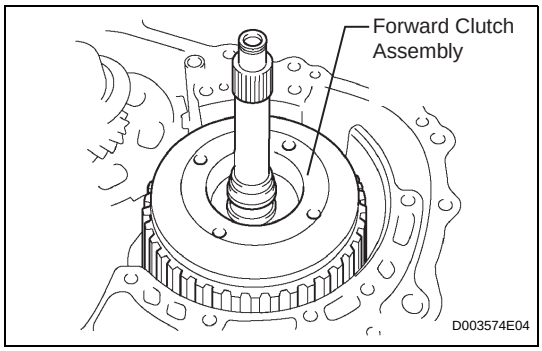

35. REMOVE FORWARD CLUTCH ASSEMBLY

(a) Remove the forward clutch assembly from the transaxle case.

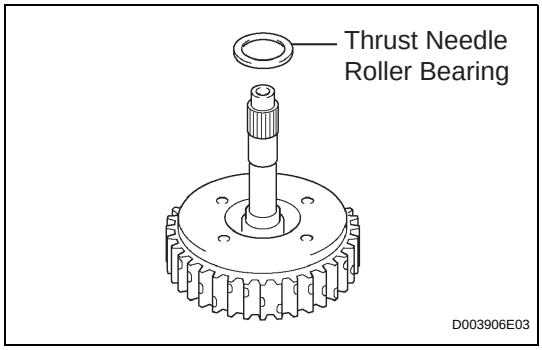

(b) Remove the thrust needle roller bearing from the forward clutch.

cardiagn.com

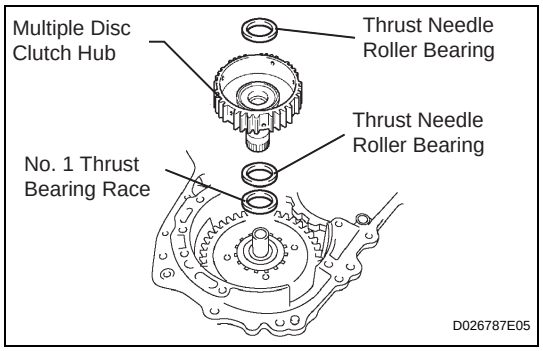

36. REMOVE MULTIPLE DISC CLUTCH HUB

(a) Remove the thrust needle roller bearing, multiple disc clutch hub, thrust needle roller bearing and No. 1 thrust bearing race from the transaxle case.

37. INSPECT MULTIPLE DISC CLUTCH HUB (See page AX-228)

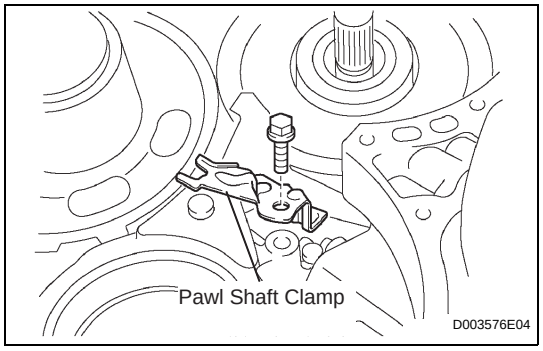

38. REMOVE UNDERDRIVE PLANETARY GEAR ASSEMBLY

(a) Remove the bolt and pawl shaft clamp from the transaxle case.

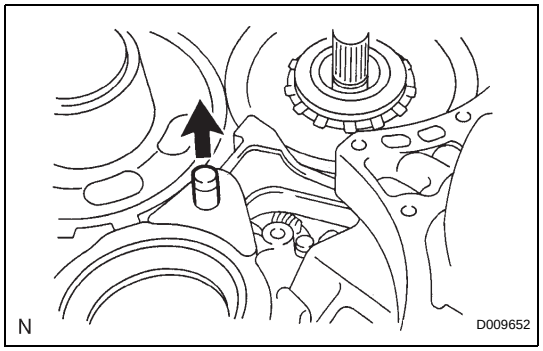

(b) Remove the parking lock pawl shaft from the transaxle case.

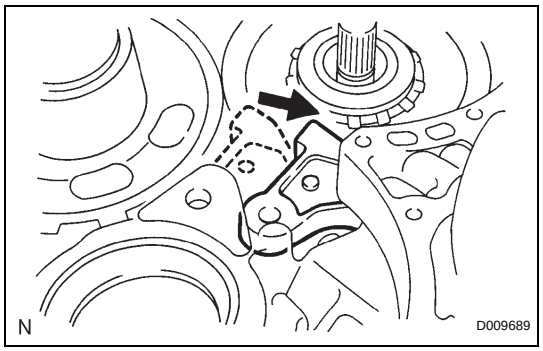

(c) Push the parking lock pawl.
HINT:
Failure to do so will cause interference when the underdrive planetary gear is removed.

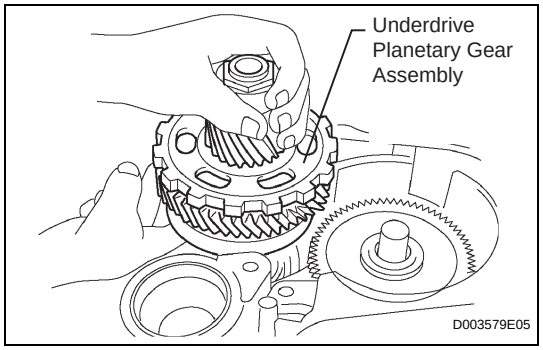

(d) Remove the underdrive planetary gear assembly from the transaxle case.
NOTICE:
Do not drop the underdrive planetary gear assembly.

cardiagn.com

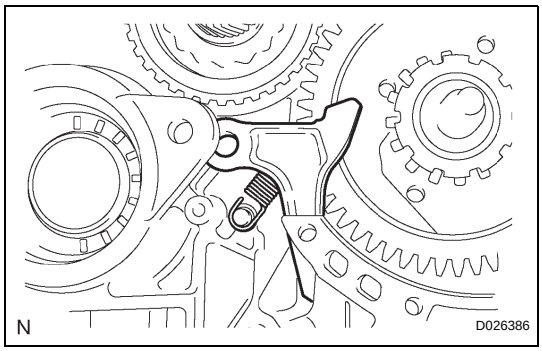

39. REMOVE PARKING LOCK PAWL

(a) Remove the spring, pawl pin and parking lock pawl.

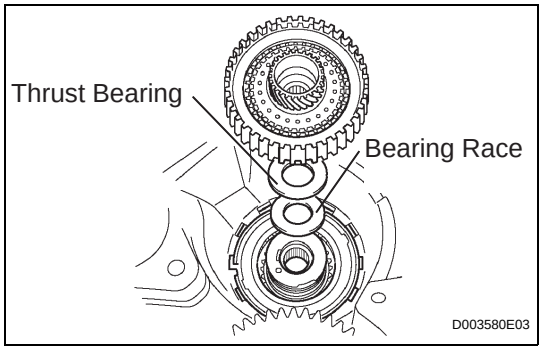

40. REMOVE UNDERDRIVE CLUTCH ASSEMBLY

(a) Remove the underdrive clutch assembly, thrust bearing, and bearing race from the transaxle case.

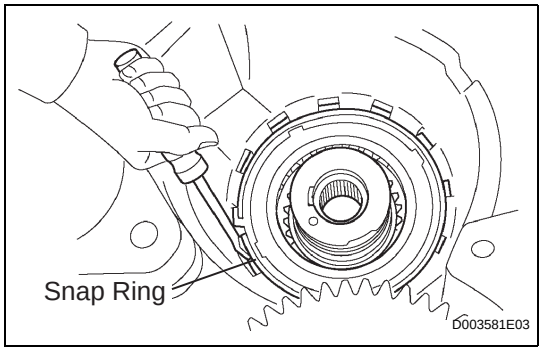

41. REMOVE UNDERDRIVE ONE-WAY CLUTCH ASSEMBLY

(a) Using a screwdriver, remove the snap ring from the transaxle case.

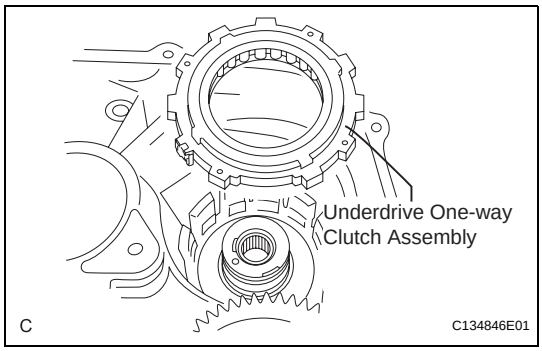

(b) Remove the underdrive one-way clutch from the transaxle case.

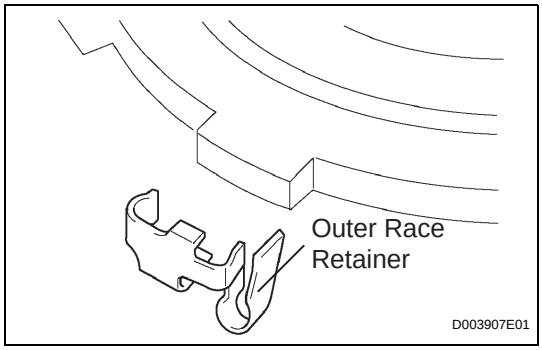

(c) Remove the outer race retainer from the one-way clutch.

cardiagn.com

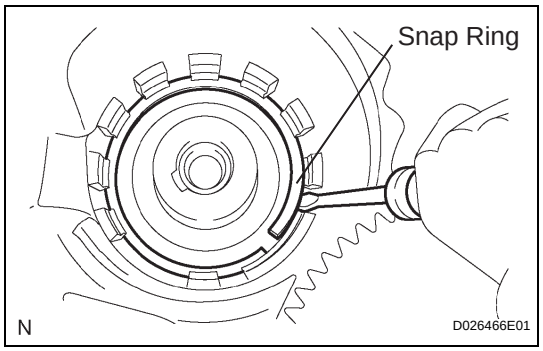

42. REMOVE NO. 2 UNDERDRIVE CLUTCH DISC

(a) Using a screwdriver, remove the snap ring.

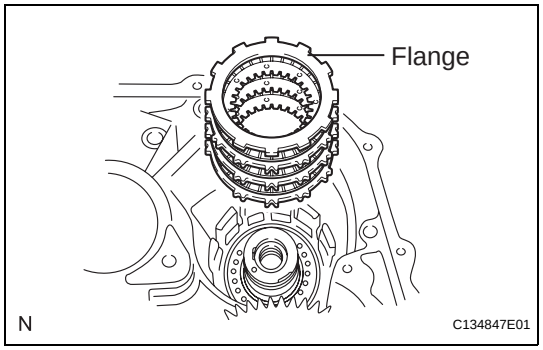

(b) Remove the flange, 3 discs and 3 plates from the transaxle case.

43. INSPECT NO. 2 UNDERDRIVE CLUTCH DISC (See page AX-228)

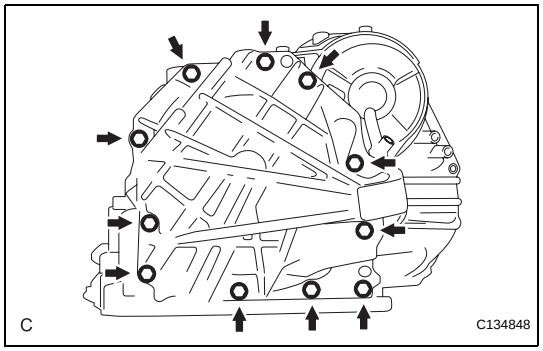

44. REMOVE TRANSAXLE REAR COVER SUB-ASSEMBLY

(a) Remove the 11 bolts.

(b) Tap on the circumference of the rear cover with a plastic hammer to remove the transaxle rear cover from the transaxle case.

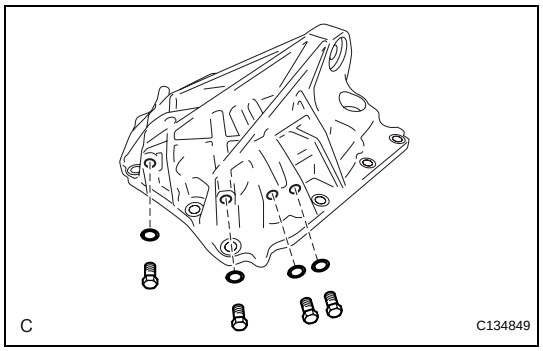

45. REMOVE NO. 1 TRANSAXLE CASE PLUG

(a) Remove the 4 No. 1 transaxle case plugs from the transaxle rear cover.

(b) Remove the 4 O-rings from the 4 No. 1 transaxle case plugs.

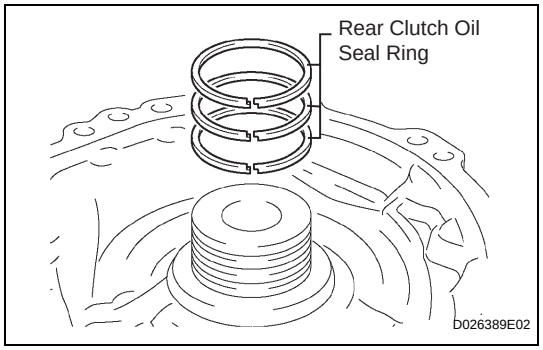

46. REMOVE REAR CLUTCH OIL SEAL RING

(a) Remove the 3 rear clutch oil seal rings from the transaxle rear cover.

cardiagn.com

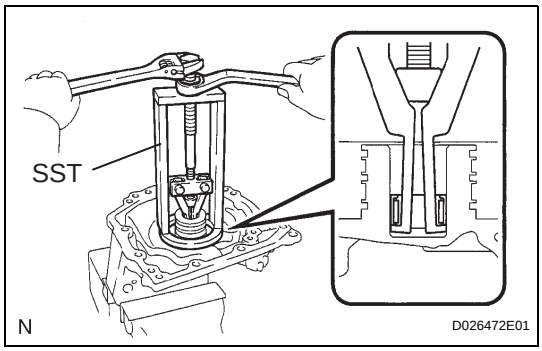

47. REMOVE NEEDLE ROLLER BEARING

(a) Using SST, remove the needle roller bearing from the transaxle rear cover.

SST 09387-00041 (09387-01021, 09387-01030, 09387-01040)

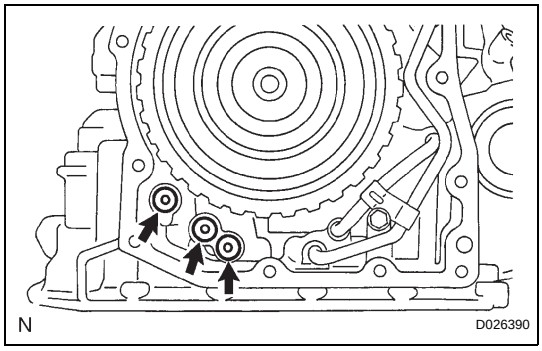

48. REMOVE NO. 1 GOVERNOR APPLY GASKET

(a) Using a screwdriver, remove the 3 apply gaskets.

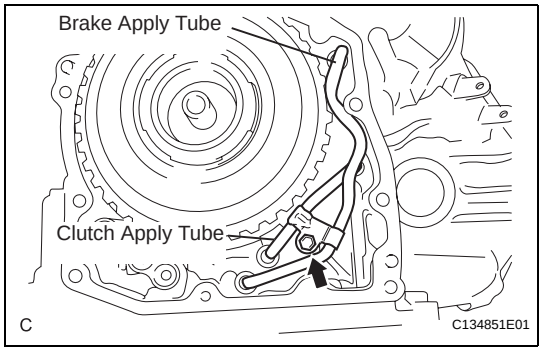

49. REMOVE BRAKE APPLY TUBE

(a) Remove the bolt, clamp and brake apply tube.
(b) Remove the clutch apply tube.
(c) Remove the brake apply tube from the clamp.

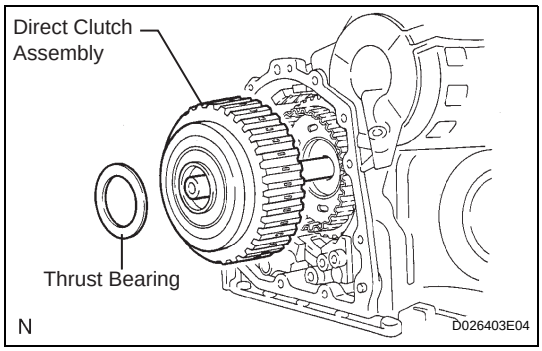

50. REMOVE DIRECT CLUTCH ASSEMBLY

(a) Remove the thrust bearing and the direct clutch assembly from the transaxle case.

51. INSPECT PACK CLEARANCE OF DIRECT CLUTCH (See page AX-232)

52. INSPECT PACK CLEARANCE OF OVERDRIVE CLUTCH (See page AX-232)

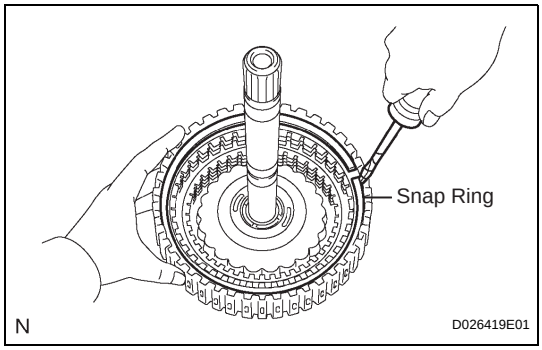

53. REMOVE DIRECT MULTIPLE DISC CLUTCH DISC

(a) Using a screwdriver, remove the snap ring from the intermediate shaft.

cardiagn.com

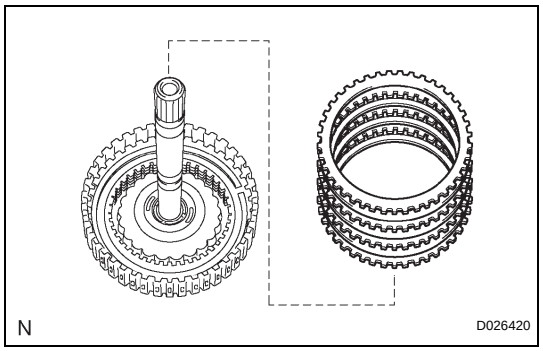

(b) Remove the flange, 3 discs, 3 plates and cushion plate from the intermediate shaft.

54. INSPECT DIRECT MULTIPLE DISC CLUTCH DISC (See page AX-231)

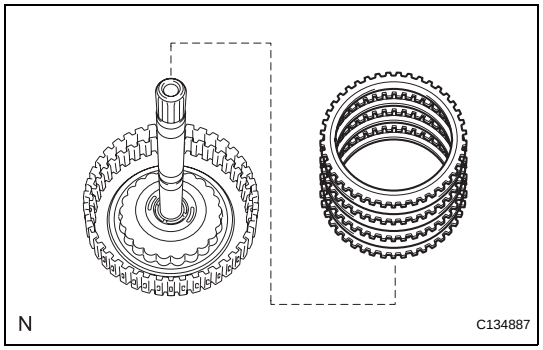

55. REMOVE OVERDRIVE DIRECT CLUTCH DISC

(a) Using a screwdriver, remove the snap ring from the intermediate shaft.

(b) Remove the flange, 3 discs and 3 plates from the intermediate shaft.

56. INSPECT OVERDRIVE DIRECT CLUTCH DISC (See page AX-231)

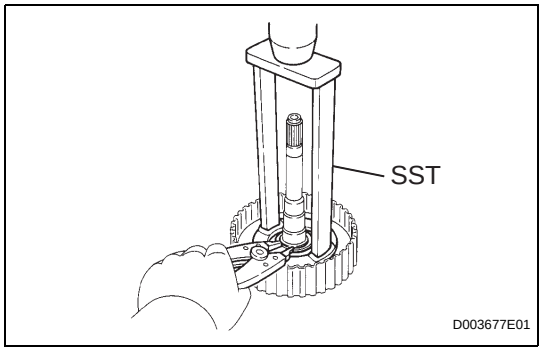

57. REMOVE OVERDRIVE CLUTCH RETURN SPRING SUB-ASSEMBLY

(a) Place SST on the clutch balancer and compress the spring with a press.
SST 09387-00020

(b) Using a snap ring expander, remove the snap ring from the direct clutch drum.
NOTICE:
- **Stop the press when the spring seat is lowered to the place 1 to 2 mm (0.039 to 0.078 in.) from the snap ring groove. This prevents the spring seat from being deformed.**
- **Do not expand the snap ring excessively.**

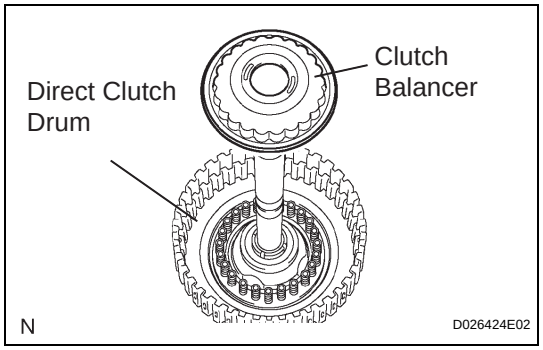

(c) Remove the clutch balancer from the overdrive direct clutch drum.

cardiagn.com

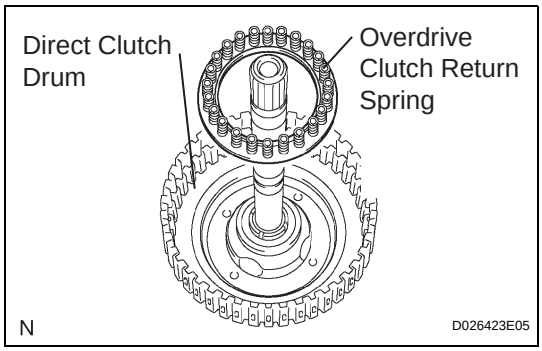

(d) Remove the overdrive clutch return spring from the overdrive direct clutch drum.

58. INSPECT OVERDRIVE CLUTCH RETURN SPRING SUB-ASSEMBLY (See page AX-231)

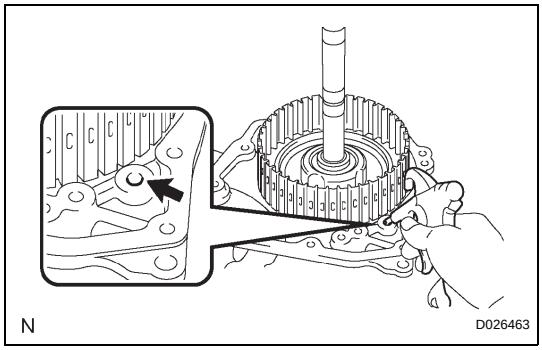

59. REMOVE OVERDRIVE DIRECT CLUTCH PISTON

(a) Install the intermediate shaft on the transaxle rear cover.

(b) Holding the direct clutch piston by hand, apply compressed air (392 kPa, 4.0 kgf/cm^2, 57 psi) to the transaxle rear cover to remove the direct clutch piston.

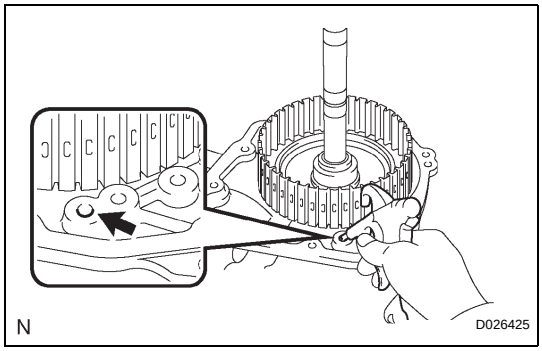

60. REMOVE OVERDRIVE DIRECT CLUTCH DRUM SUB-ASSEMBLY

(a) Holding the direct clutch drum by hand, apply compressed air (392 kPa, 4.0 kgf/cm^2, 57 psi) to the transaxle rear cover to remove the direct clutch drum.

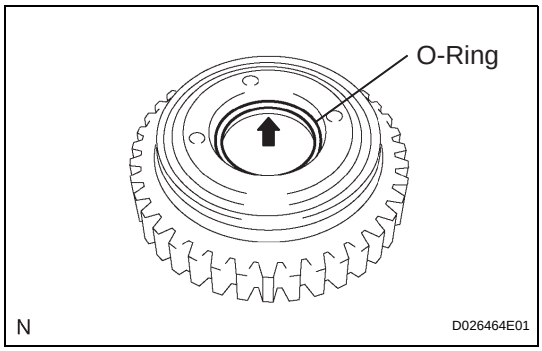

61. REMOVE OVERDRIVE DIRECT CLUTCH O-RING

(a) Using a screwdriver, remove the O-ring from the direct clutch drum.

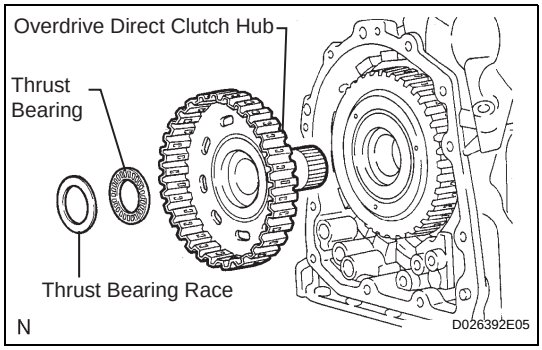

62. REMOVE OVERDREVE DIRECT CLUTCH HUB SUB-ASSEMBLY

(a) Remove the thrust bearing race, thrust bearing, and overdrive direct clutch hub from the planetary gear assembly.

cardiagn.com

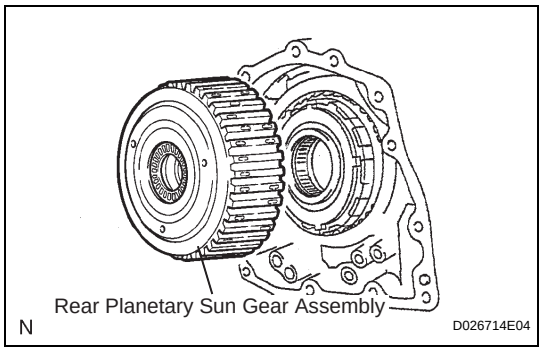

63. REMOVE REAR PLANETARY SUN GEAR ASSEMBLY

(a) Remove the rear planetary sun gear assembly from the transaxle case.

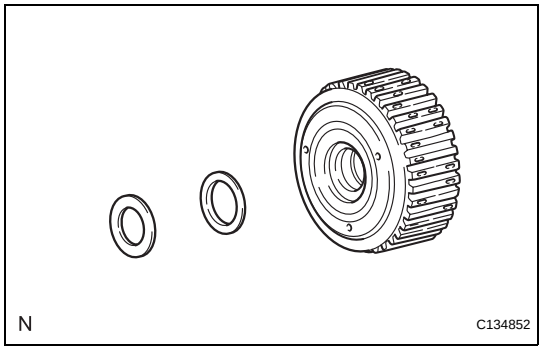

(b) Remove the thrust needle roller bearing and thrust bearing race from the rear planetary sun gear assembly.

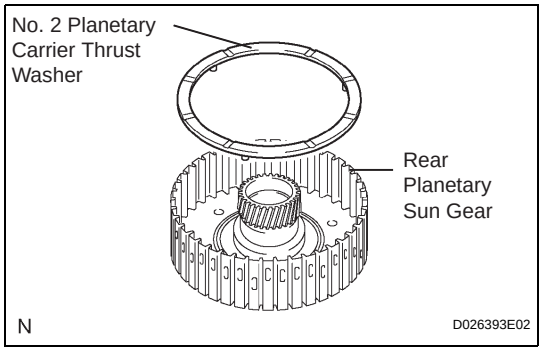

(c) Remove the No. 2 planetary carrier thrust washer from the rear planetary sun gear assembly.

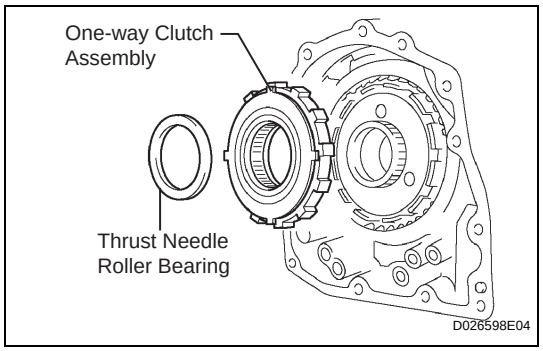

64. REMOVE ONE-WAY CLUTCH ASSEMBLY

(a) Remove the one-way clutch assembly and the thrust needle roller bearing from the transaxle case.

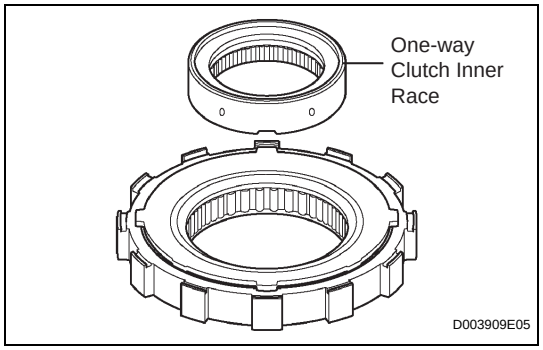

(b) Remove the one-way clutch inner race from the one-way clutch assembly.

cardiagn.com

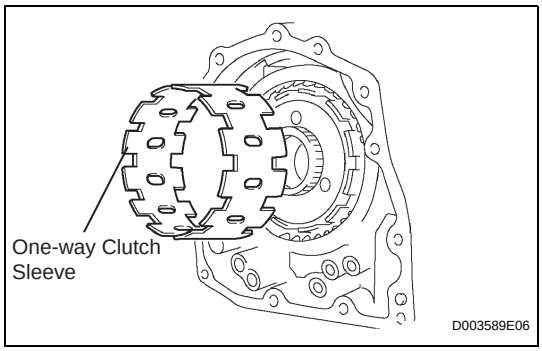

65. REMOVE ONE-WAY CLUTCH SLEEVE

(a) Remove the one-way clutch sleeve from the transaxle case.

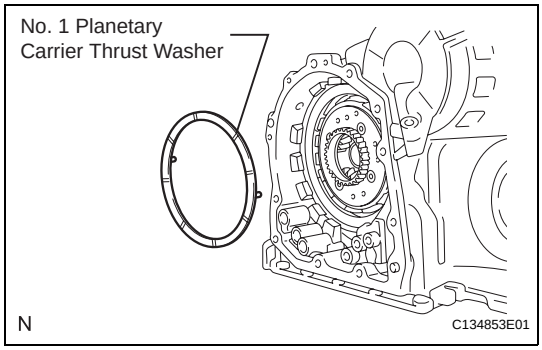

66. REMOVE NO. 1 PLANETARY CARRIER THRUST WASHER

(a) Remove the No. 1 planetary carrier thrust washer from the planetary gear assembly.

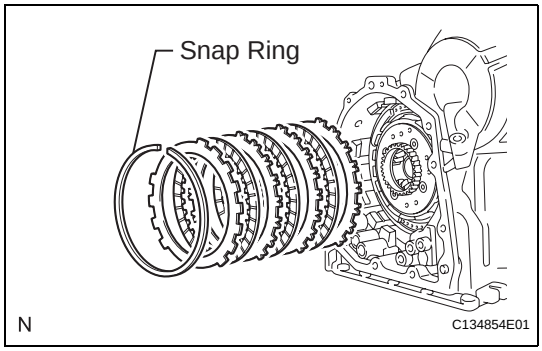

67. REMOVE 2ND BRAKE DISC

(a) Using a screwdriver, remove the snap ring.

(b) Remove the flange, 3 discs and 3 plates from the transaxle case.

68. INSPECT 2ND BRAKE DISC (See page AX-228)

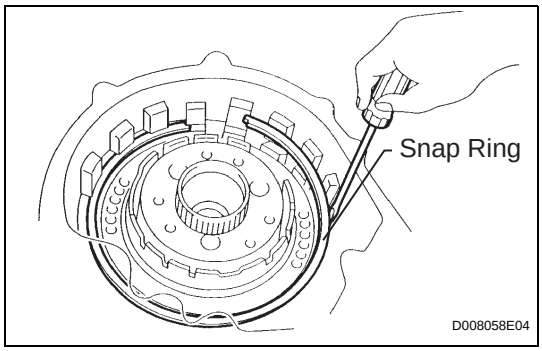

69. REMOVE SECOND BRAKE PISTON ASSEMBLY

(a) Using a screwdriver, remove the snap ring.

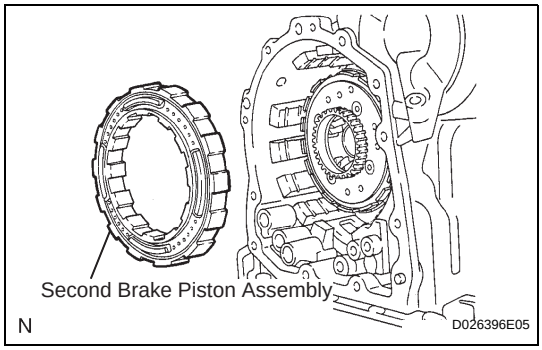

(b) Remove the second brake piston assembly from the transaxle case.

cardiagn.com

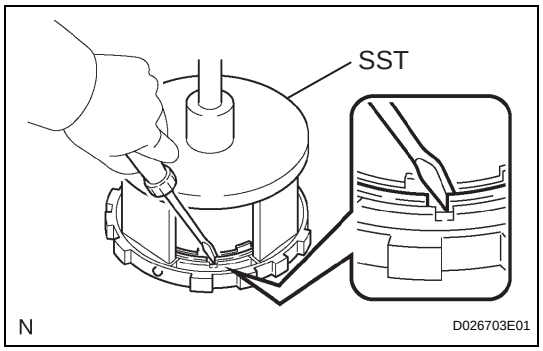

70. REMOVE 2ND BRAKE PISTON RETURN SPRING SUB-ASSEMBLY

(a) Place SST on the return spring and compress it with a press.
SST 09387-00060

(b) Using a screwdriver, remove the snap ring.

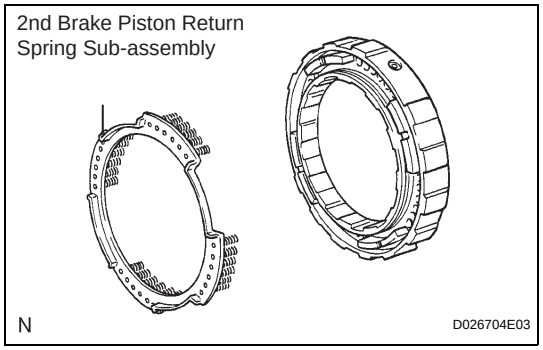

(c) Remove the 2nd brake piston return spring sub-assembly.

71. INSPECT 2ND BRAKE PISTON RETURN SPRING SUB-ASSEMBLY (See page AX-234)

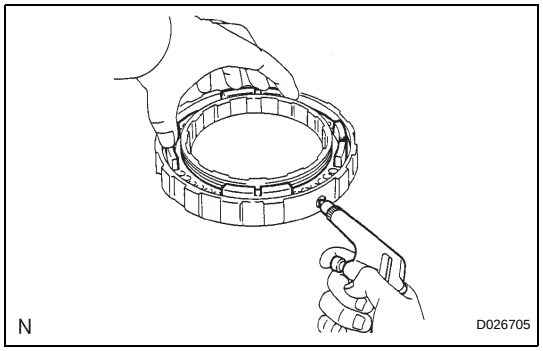

72. REMOVE 2ND BRAKE PISTON

(a) Hold the 2nd brake piston and apply compressed air (392 kPa, 4.0 kgf/cm^2, 57 psi) to the 2nd brake cylinder to remove the 2nd brake piston.

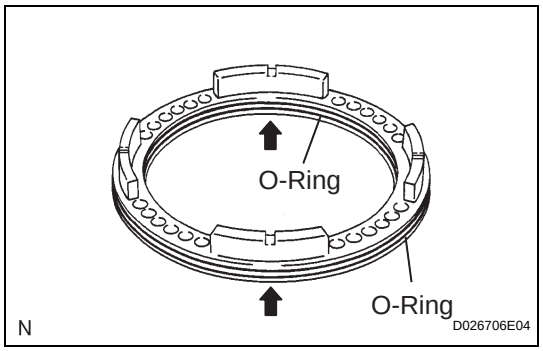

73. REMOVE 2ND BRAKE PISTON O-RING

(a) Remove the 2 O-rings from the 2nd brake piston.

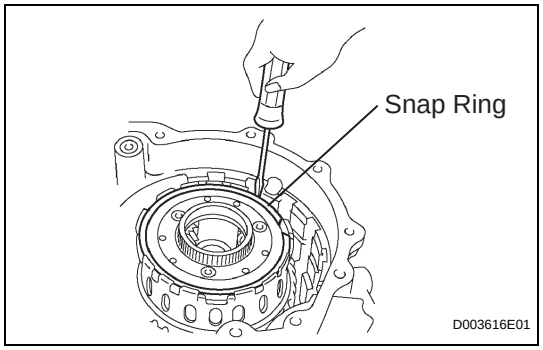

74. REMOVE REAR PLANETARY GEAR ASSEMBLY

(a) Using a screwdriver, remove the snap ring.

cardiagn.com

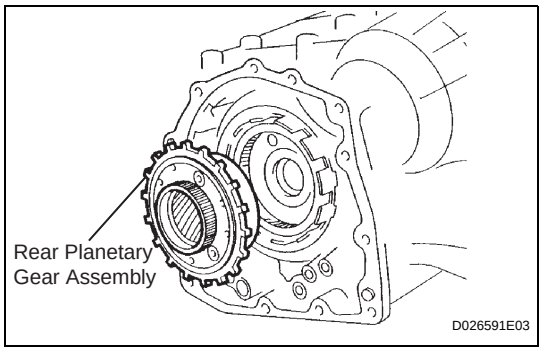

(b) Remove the rear planetary gear assembly from the transaxle case.

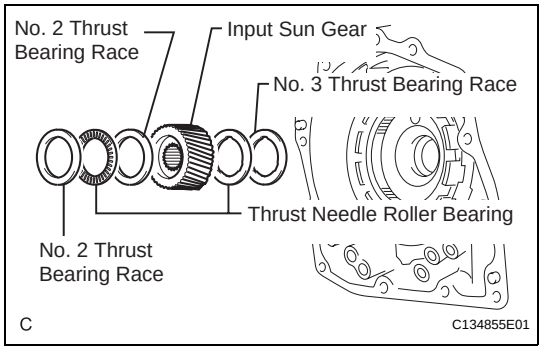

75. REMOVE INPUT SUN GEAR

(a) Remove the 2 thrust needle roller bearings, No. 2 thrust bearing races, No. 3 thrust bearing race, and input sun gear from the transaxle case.

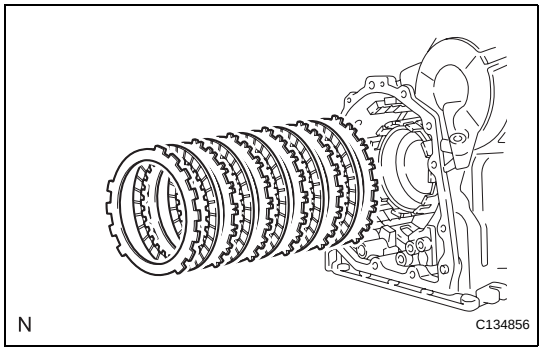

76. REMOVE 1ST AND REVERSE BRAKE DISC

(a) Remove the flange, 5 discs and 5 plates from the transaxle case.

77. INSPECT 1ST AND REVERSE BRAKE DISC (See page AX-229)

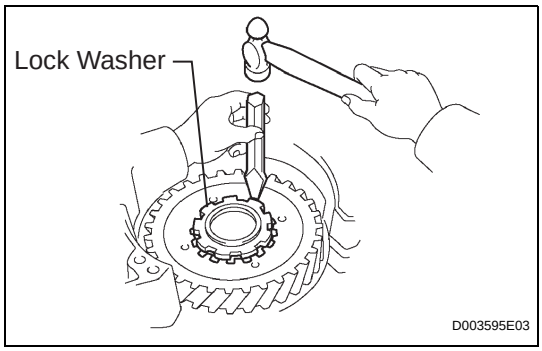

78. REMOVE FRONT PLANETARY GEAR ASSEMBLY

(a) Using a chisel and hammer, unstake the lock washer.

NOTICE:

Push down all claws of the washer. Otherwise SST cannot be fully pressed against the nut, and the nut cannot be loosened.

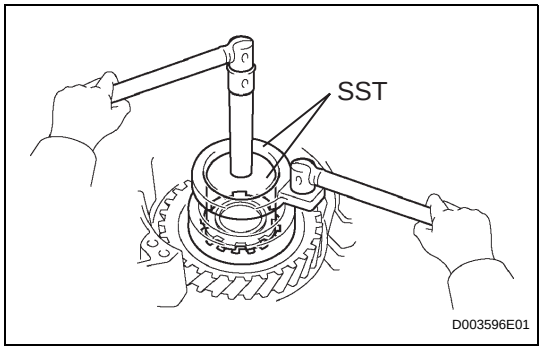

(b) Using SST, remove the nut and washer.

SST 09387-00030, 09387-00080

cardiagn.com

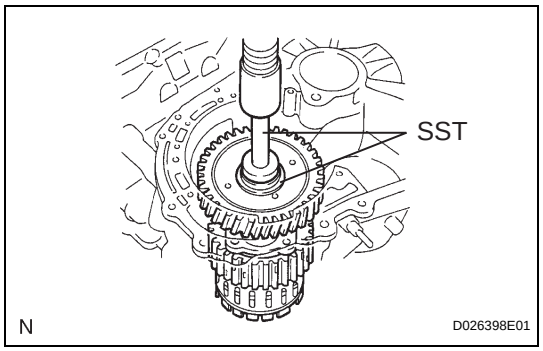

(c) Using SST and a press, remove the front planetary gear assembly from the counter drive gear.
SST 09950-60010 (09951-00450), 09950-70010 (09951-07100)

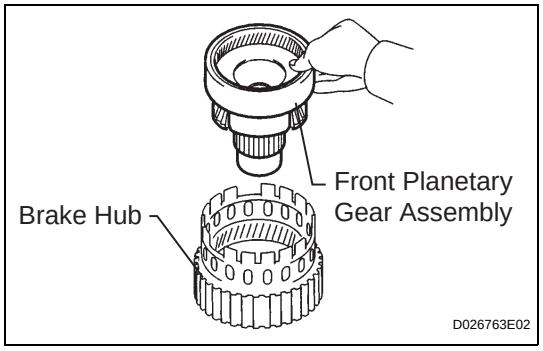

(d) Remove the front planetary gear assembly from the brake hub.

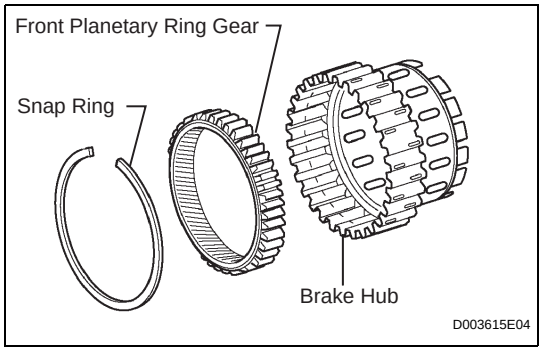

79. REMOVE FRONT PLANETARY RING GEAR

(a) Using a screwdriver, remove the snap ring and front planetary ring gear from the brake hub.

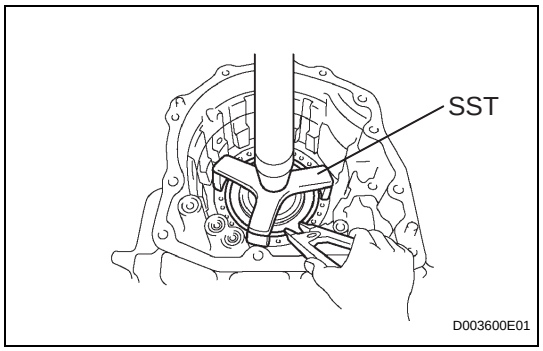

80. REMOVE 1ST AND REVERSE BRAKE RETURN SPRING SUB-ASSEMBLY

(a) Place SST on the return spring, and compress the return spring with a press.
SST 09387-00070

(b) Using a snap ring expander, remove the snap ring.
NOTICE:
- **Stop the press when the spring seat is lowered to the place 1 to 2 mm (0.039 to 0.078 in.) from the snap ring groove to prevent the spring seat from being deformed.**
- **Do not expand the snap ring excessively.**

(c) Remove the return spring.

81. INSPECT 1ST AND REVERSE BRAKE RETURN SPRING SUB-ASSEMBLY (See page AX-229)

cardiagn.com

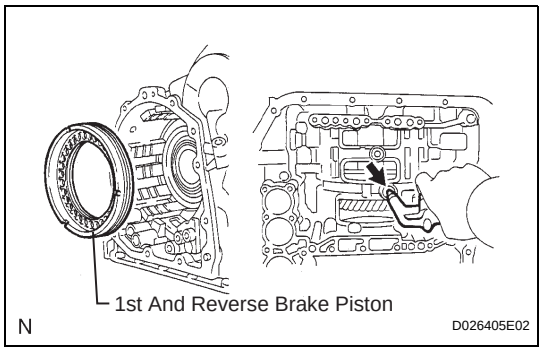

82. REMOVE 1ST AND REVERSE BRAKE PISTON

(a) Apply compressed air (392 kPa, 4.0 kgf/cm^2, 57 psi) to the transaxle case to remove the 1st and reverse brake piston.

NOTICE:

- **Applying compressed air may cause the piston to jump-out. When removing the piston, hold it by hand using a waste cloth.**
- **Take care not to splash ATF when applying the air.**

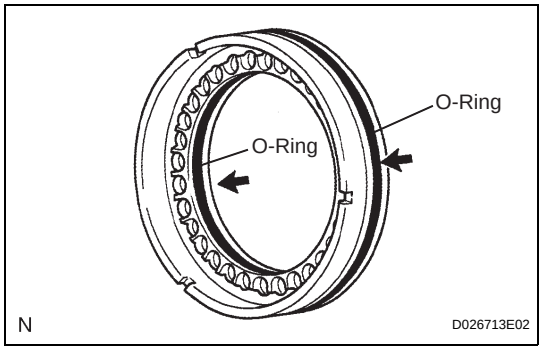

(b) Remove the 2 O-rings from the 1st and reverse brake piston.

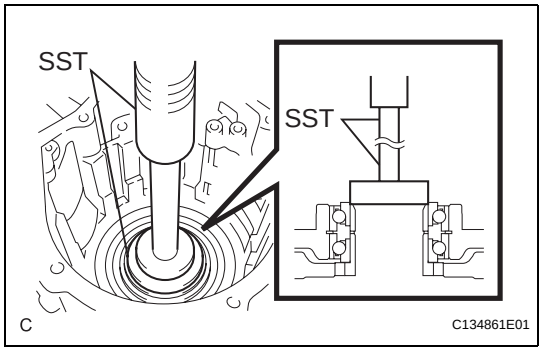

83. REMOVE COUNTER DRIVE GEAR

(a) Using SST and a press, remove the counter drive gear from the transaxle case.

SST 09950-60010 (09951-00590), 09950-70010 (09951-07100)

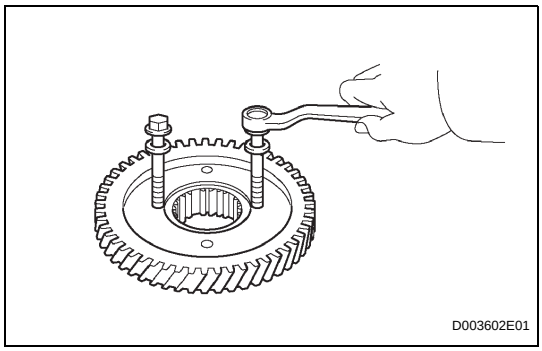

(b) Tighten the 2 bolts evenly and make clearance of approx. 20.0 mm (0.797 in.) between the counter drive gear and the inner race.

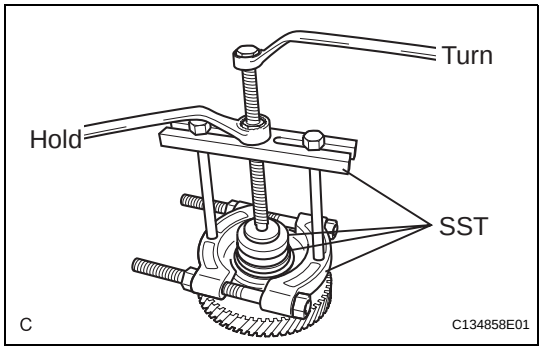

(c) Using SST, remove the tapered roller bearing inner race.

SST 09950-00020, 09950-00030, 09950-60010 (09951-00590)

cardiagn.com

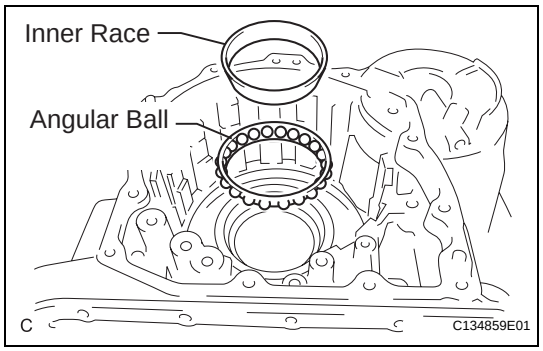

84. REMOVE COUNTER DRIVE ANGULAR BALL BEARING

(a) Remove the bearing inner race (rear side) and angular ball (rear side).

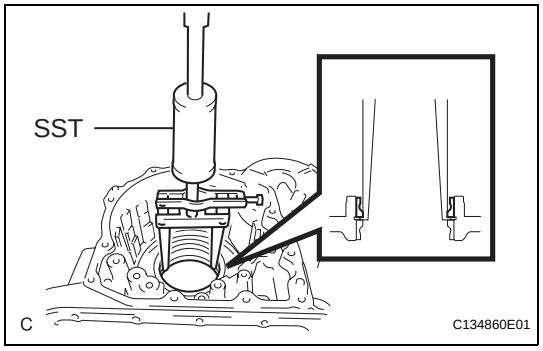

(b) Using SST, remove the bearing outer race (rear side) from the transaxle case.
SST 09308-00010

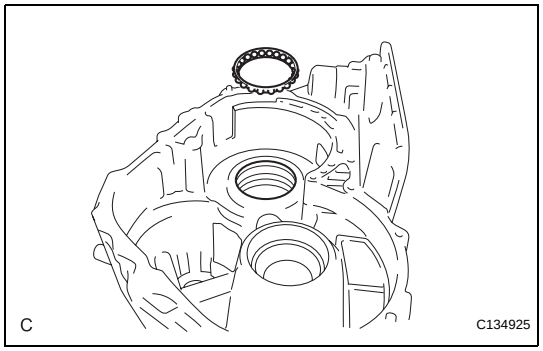

(c) Remove the angular ball (front side).

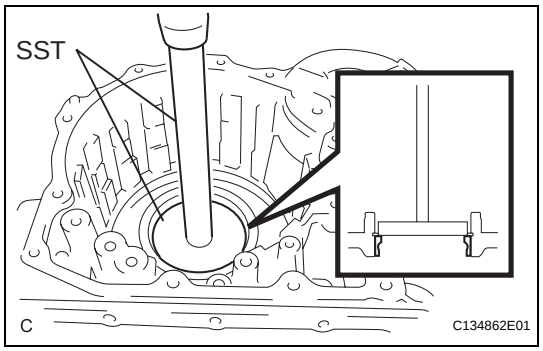

(d) Using SST and a press, remove the bearing outer race (front side) from the transaxle case.
SST 09950-60020 (09951-00810), 09950-70010 (09951-07200)

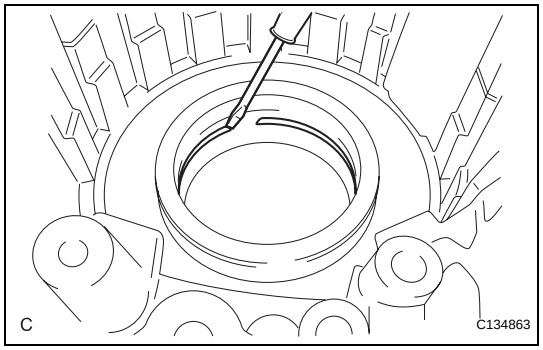

(e) Using a screwdriver, remove the snap ring from the transaxle case.

cardiagn.com

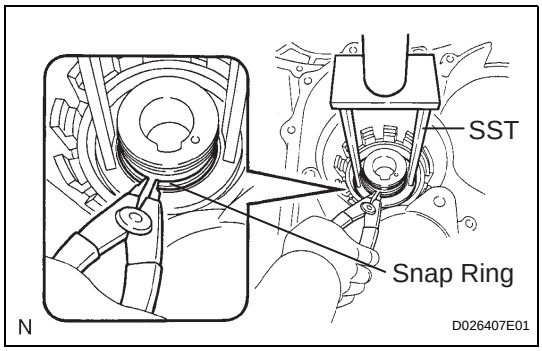

85. REMOVE UNDERDRIVE BRAKE RETURN SPRING SUB-ASSEMBLY

(a) Place SST on the return spring, and compress the return spring with a press.
SST 09387-00020

(b) Using a snap ring expander, remove the snap ring.
NOTICE:
- **Stop the press when the spring seat is lowered to the place 1 to 2 mm (0.039 to 0.078 in.) from the snap ring groove to prevent the spring seat from being deformed.**
- **Do not expand the snap ring excessively.**

(c) Remove the return spring.

86. INSPECT UNDERDRIVE BRAKE RETURN SPRING SUB-ASSEMBLY (See page AX-229)

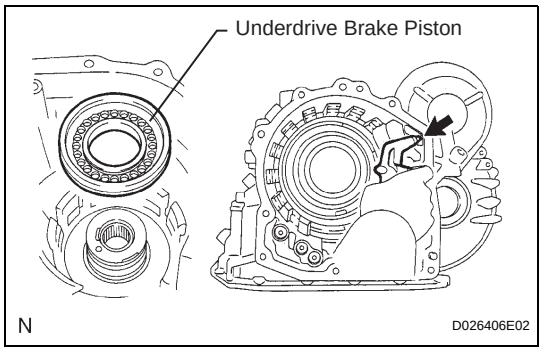

87. REMOVE UNDERDRIVE BRAKE PISTON

(a) Apply compressed air (392 kPa, 4.0 kgf/cm^2, 57 psi) to the transaxle case to remove the underdrive brake piston.

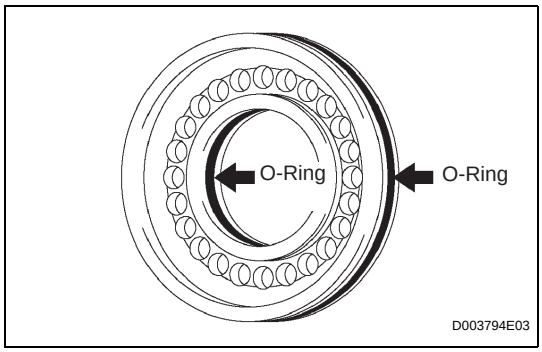

(b) Remove the 2 O-rings from the underdrive brake piston.

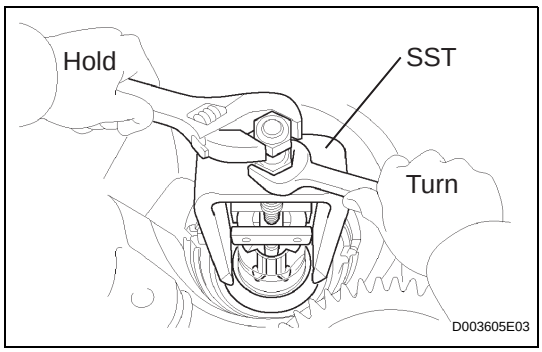

88. REMOVE NEEDLE ROLLER BEARING

(a) Using SST, remove the needle roller bearing from the transaxle case.
SST 09387-00041 (09387-01010, 09387-01030, 09387-01040)

cardiagn.com

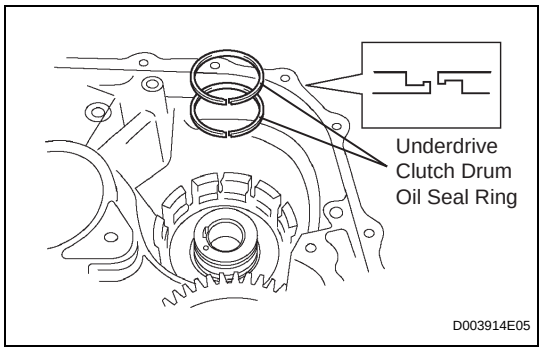

89. REMOVE UNDERDRIVE CLUTCH DRUM OIL SEAL RING

(a) Remove the 2 oil seal rings from the transaxle case.

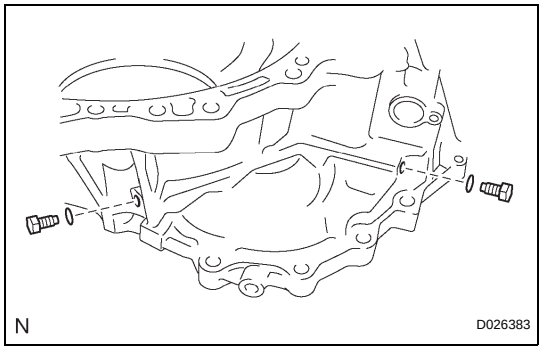

90. REMOVE NO. 1 TRANSAXLE CASE PLUG

(a) Remove the 2 No. 1 transaxle case plugs.

(b) Remove the 2 O-rings from the 2 No. 1 transaxle case plugs.

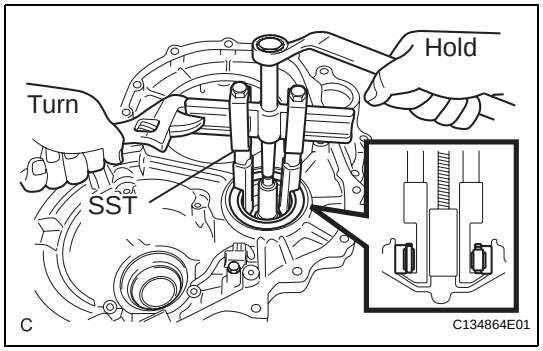

91. REMOVE UNDERDRIVE CYLINDRICAL ROLLER BEARING

(a) Using SST, remove the underdrive cylindrical roller bearing from the transaxle case.

SST 09820-00031, 09950-40011 (09952-04010, 09954-04010, 09955-04061, 09957-04010), 09950-50013 (09951-05010, 09953-05020)

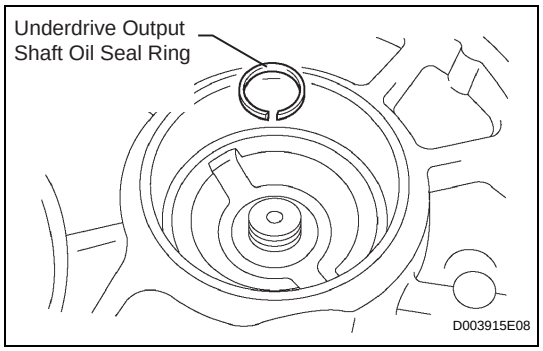

92. REMOVE UNDERDRIVE OUTPUT SHAFT OIL SEAL RING

(a) Remove the oil seal ring from the transaxle housing.

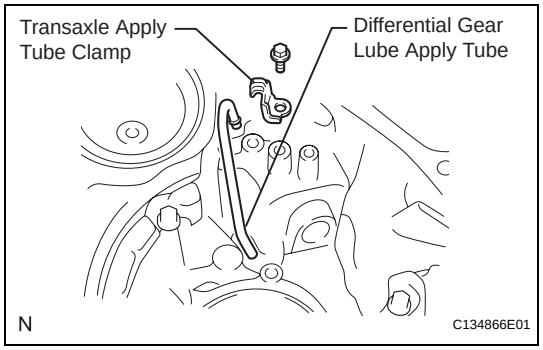

93. REMOVE DIFFERENTIAL GEAR LUBE APPLY TUBE

(a) Remove the bolt, transaxle apply tube clamp and differential gear lube apply tube from the transaxle housing.

cardiagn.com

INSPECTION

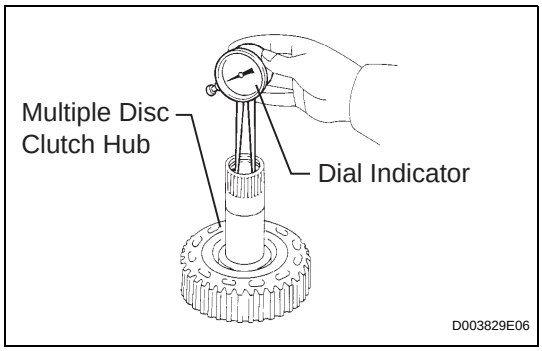

1. INSPECT MULTIPLE DISC CLUTCH HUB

(a) Using a dial indicator, measure the inside diameter of the multiple disc clutch hub bushing.

Standard inside diameter:
23.025 to 23.046 mm (0.9065 to 0.9073 in.)
Maximum inside diameter:
23.09 mm (0.9091 in.)

If the diameter is greather than the maximum, replace the multiple disc clutch hub with a new one.

NOTICE:
Check the contact surface of the bushing in the direct clutch shaft. If any scratch or discolor is identified, replace the direct clutch sub-assembly with a new one.

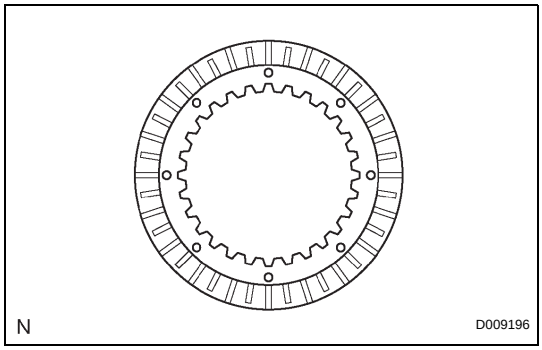

2. INSPECT NO. 2 UNDERDRIVE CLUTCH DISC

(a) Check if the sliding surfaces of the discs, plates and flange are worn or burnt.
If necessary, replace them.

NOTICE:
- **If the linings of the discs are peeled off or discolored, or even if a part of the groove is damaged, replace all discs.**
- **Before assembling new discs, soak them in ATF for at least 15 minutes.**

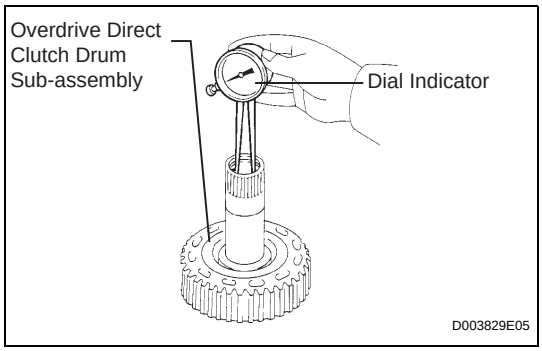

3. INSPECT OVERDRIVE DIRECT CLUTCH DRUM SUB-ASSEMBLY

(a) Using a dial indicator, measure the inside diameter of the overdrive direct clutch drum sub-assembly bushing.

Standard inside diameter:
23.025 to 23.046 mm (0.9065 to 0.9073 in.)
Maximum inside diameter:
23.09 mm (0.9091 in.)

If the diameter is greather than the maximum, replace the overdrive direct clutch drum sub-assembly.

NOTICE:
Check the contact surface of the bushing in the direct clutch shaft. If any scratch or discolor is identified, replace the direct clutch sub-assembly with a new one.

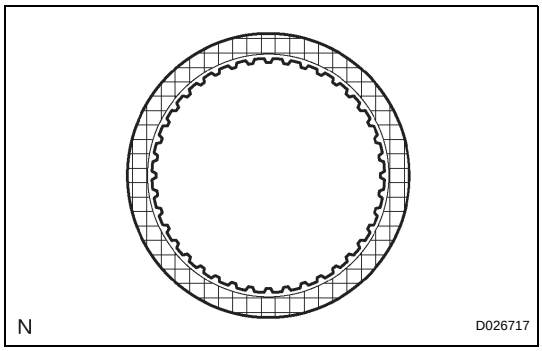

4. INSPECT 2ND BRAKE DISC

(a) Check if the sliding surfaces of the discs, plates and flange are worn or burnt.
If necessary, replace them.

NOTICE:
- **If the linings of the discs are peeled off or discolored, or even if a part of the groove is damaged, replace all discs.**
- **Before assembling new discs, soak them in ATF for at least 15 minutes.**

cardiagn.com

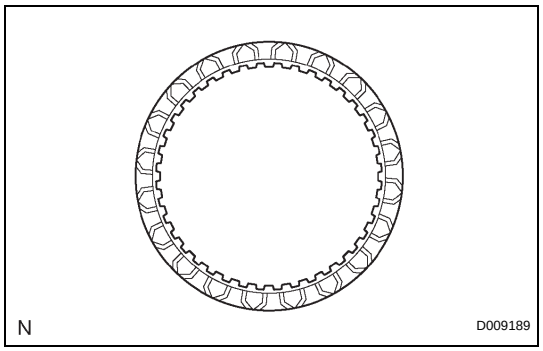

5. INSPECT 1ST AND REVERSE BRAKE DISC

(a) Check if the sliding surfaces of the discs, plates and flange are worn or burnt.
If necessary, replace them.
NOTICE:
- **If the linings of the discs are peeled off or discolored, or even if a part of the groove is damaged, replace all discs.**
- **Before assembling new discs, soak them in ATF for at least 15 minutes.**

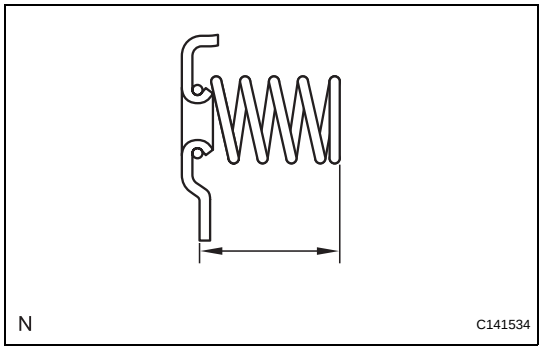

6. INSPECT 1ST AND REVERSE BRAKE RETURN SPRING SUB-ASSEMBLY

(a) Using vernier calipers, measure the free length of the spring together with the spring seat.
Standard free length:
17.63 mm (0.6941 in.)
If the free length is shorter than the standard free length, replace the 1st and reverse brake return spring sub-assembly.

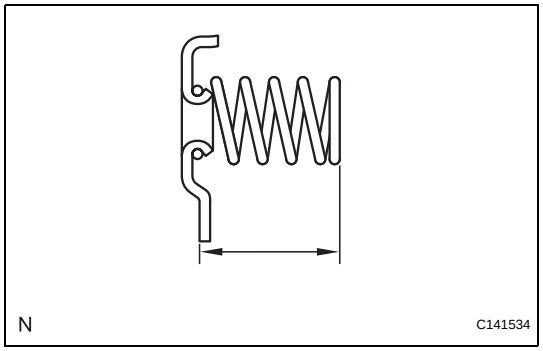

7. INSPECT UNDERDRIVE BRAKE RETURN SPRING SUB-ASSEMBLY

(a) Using vernier calipers, measure the free length of the spring together with the spring seat.
Standard free length:
13.24 mm (0.5213 in.)
If the free length is shorter than the standard free length, replace the under drive brake return spring sub-assembly.

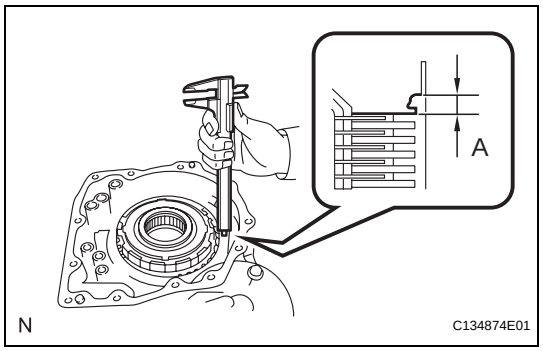

8. INSPECT PACK CLEARANCE OF FIRST AND REVERSE BRAKE

(a) Using vernier calipers, measure the distance between the disc surface and the contact surface of the 2nd brake cylinder and transaxle case (Dimension A).

(b) Select an appropriate flange so that the pack clearance will be within the specified range.
Pack clearance:
0.745 to 1.21 mm (0.0293 to 0.0476 in.)
HINT:
Piston stroke = Dimension A - Flange thickness
Flange thickness: mm (in.)

Mark	Thickness	Mark	Thickness
1	1.8 (0.071)	5	2.2 (0.087)
2	1.9 (0.075)	6	2.3 (0.091)
3	2.0 (0.079)	7	2.4 (0.094)
4	2.1 (0.083)	8	2.5 (0.098)

(c) Install the flange.

cardiagn.com

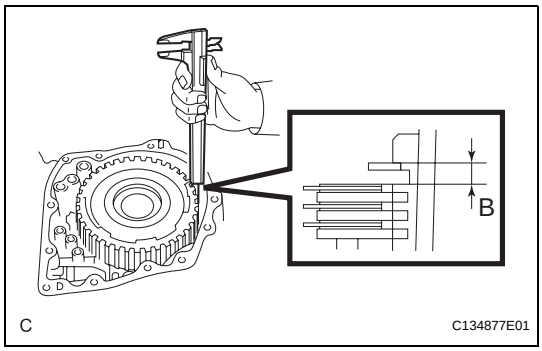

9. INSPECT PACK CLEARANCE OF SECOND BRAKE

(a) Using vernier calipers, measure the distance between the disc surface and snap ring surface (Dimension B).

(b) Select an appropriate flange so that the pack clearance will be within the specified range.

Pack clearance:

0.53 to 0.91 mm (0.0209 to 0.0358 in.)

HINT:

Piston stroke = Dimension B - Flange thickness - Snap ring thickness 1.6 mm (0.063 in.)

Flange thickness: mm (in.)

Mark	Thickness	Mark	Thickness
0	2.9 (0.114)	5	3.4 (0.134)
1	3.0 (0.118)	6	3.5 (0.138)
2	3.1 (0.122)	7	3.6 (0.142)
3	3.2 (0.126)	8	3.7 (0.146)
4	3.3 (0.130)	-	-

(c) Install the flange.

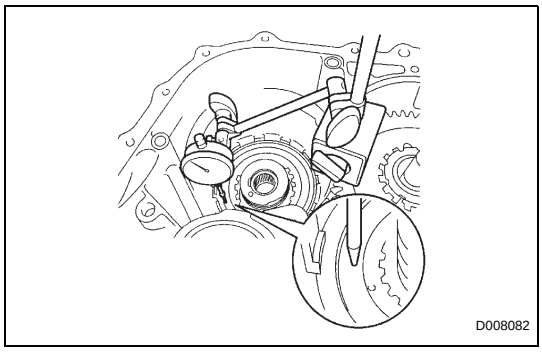

10. INSPECT PACK CLEARANCE OF NO. 2 UNDERDRIVE CLUTCH

(a) Using a dial indicator, measure the underdrive clutch pack clearance while applying and releasing compressed air (392 kPa, 4.0 kgf/cm^2, 57 psi).

Pack clearance:

1.645 to 2.20 mm (0.0648 to 0.0866 in.)

(b) Select an appropriate flange from the table below so that the pack clearance will be within the specified range.

Flange thickness: mm (in.)

Mark	Thickness	Mark	Thickness
Y	2.8 (0.110)	C	3.4 (0.134)
A	3.0 (0.118)	D	3.6 (0.142)
B	3.2 (0.126)	-	-

(c) Temporarily remove the snap ring and attach the flange to the transaxle case.

(d) Reinstall the snap ring to the transaxle case.

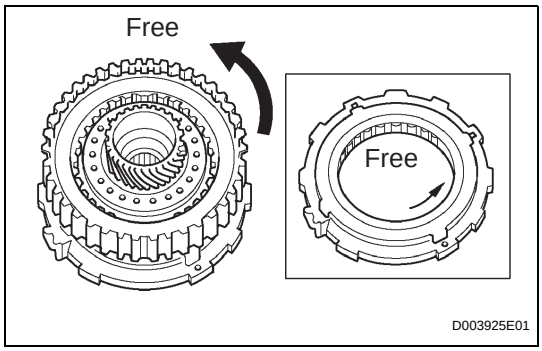

11. INSPECT UNDERDRIVE ONE-WAY CLUTCH ASSEMBLY

(a) Install the underdrive clutch assembly to the one-way clutch.

(b) Rotate the underdrive clutch assembly to check the rotating direction for the lock or free operation.

(c) Remove the underdrive clutch assembly from the one-way clutch.

cardiagn.com

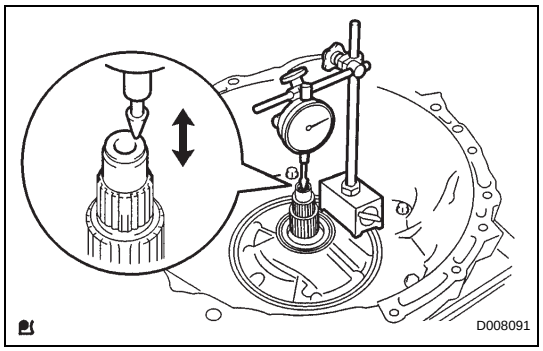

12. INSPECT INPUT SHAFT END PLAY

(a) Using a dial indicator, measure the input shaft end play.

End play:

0.262 to 1.244 mm (0.01 to 0.049 in.)

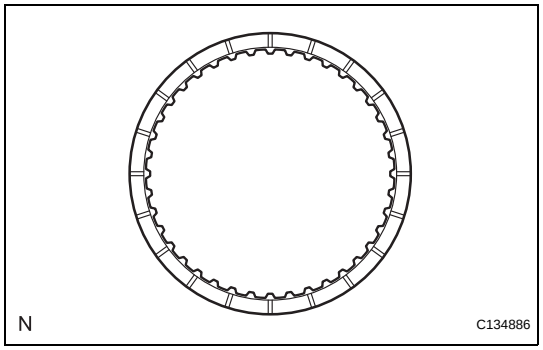

13. INSPECT DIRECT MULTIPLE DISC CLUTCH DISC

(a) Check if the sliding surfaces of the discs, plates, and flange are worn or burnt. If necessary, replace them.

NOTICE:

- **If the lining of a disc comes off or discolors, or a groove is damaged, replace all discs.**
- **Before assembling new discs, soak them in ATF for at least 15 minutes.**

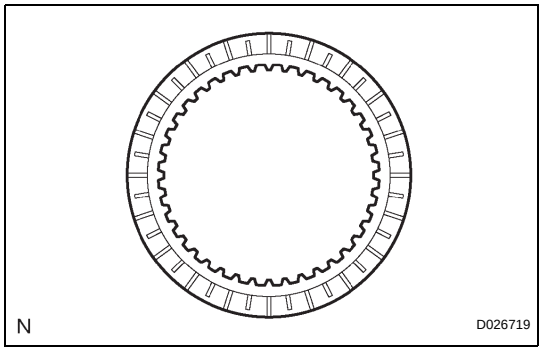

14. INSPECT OVERDRIVE DIRECT CLUTCH DISC

(a) Check if the sliding surfaces of the discs, plates, and flange are worn or burnt. If necessary, replace them.

NOTICE:

- **If the lining of a disc comes off or discolors, or a groove is damaged, replace all discs.**
- **Before assembling new discs, soak them in ATF for at least 15 minutes.**

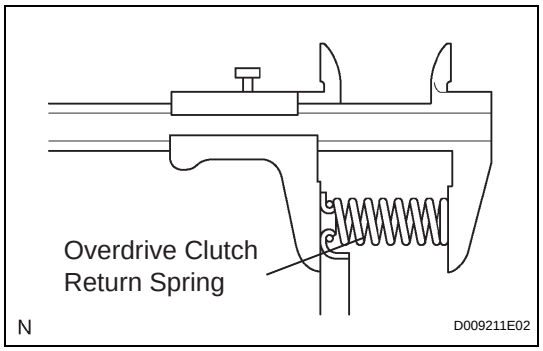

15. INSPECT OVERDRIVE CLUTCH RETURN SPRING SUB-ASSEMBLY

(a) Using vernier calipers, measure the free length of the spring together with the spring seat.

Standard free length:

25.91 mm (1.0201 in.)

If the free length is shorter than the standard free length, replace the overdrive clutch return spring sub-assembly.

cardiagn.com

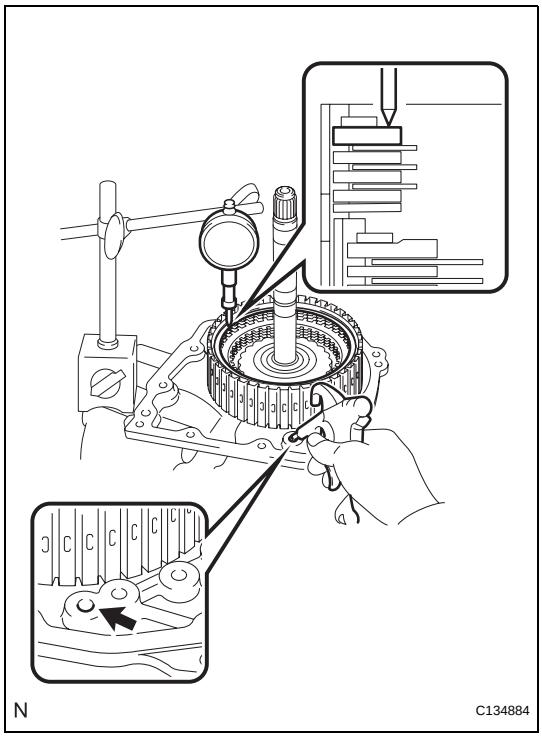

16. INSPECT PACK CLEARANCE OF DIRECT CLUTCH

(a) Install the intermediate shaft and needle roller bearing on the transaxle rear cover.

NOTICE:

Be careful not to damage the oil seal ring outers.

(b) Using a dial indicator, measure the direct clutch pack clearance while applying and releasing compressed air (392 kPa, 4.0 kgf/cm^2, 57 psi).

Pack clearance:

0.60 to 0.82 mm (0.02362 to 0.03228 in.)

If the pack clearance is not as specified, inspect the discs, plates and flange.

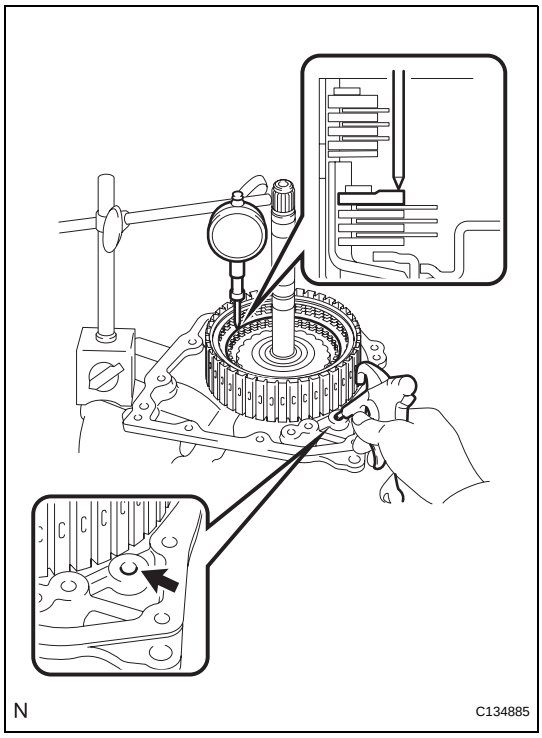

17. INSPECT PACK CLEARANCE OF OVERDRIVE CLUTCH

(a) Using a dial indicator, measure the overdrive clutch pack clearance while applying and releasing compressed air (392 kPa, 4.0 kgf/cm^2, 57 psi).

Pack clearance:

0.52 to 0.83 mm (0.02047 to 0.03268 in.)

If the pack clearance is not as specified, inspect the discs, plates and flange.

cardiagn.com

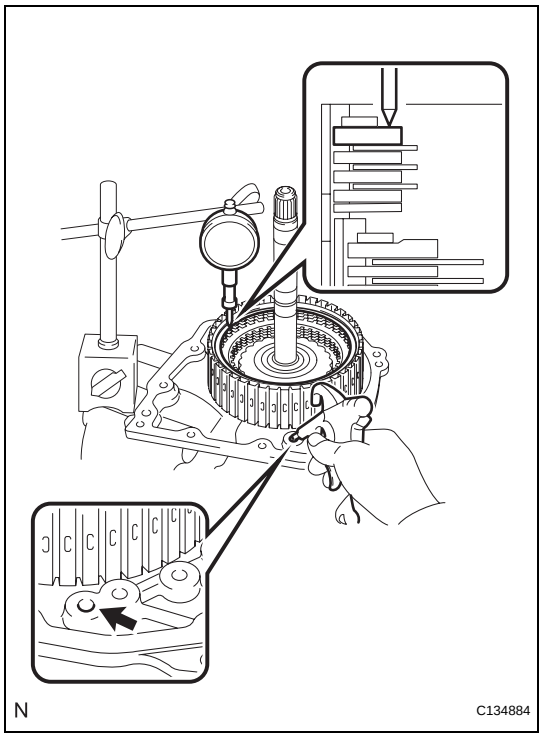

18. INSPECT PACK CLEARANCE OF DIRECT CLUTCH

(a) Install the intermediate shaft on the transaxle rear cover.

(b) Using a dial indicator, measure the direct clutch pack clearance while applying and releasing compressed air (392 kPa, 4.0 kgf/cm^2, 57 psi).

Pack clearance:

0.60 to 0.82 mm (0.02362 to 0.03228 in.)

If the pack clearance is less than the minimum, parts may have been assembled incorrectly, so check and reassemble.

If the clearance is not as specified, select another flange.

HINT:

There are 8 different thicknesses of flanges available.

Flange thickness: mm (in.)

Mark	Thickness	Mark	Thickness
0	2.9 (0.114)	4	3.3 (0.130)
1	3.0 (0.118)	5	3.4 (0.134)
2	3.1 (0.122)	6	3.5 (0.138)
3	3.2 (0.126)	7	3.6 (0.142)

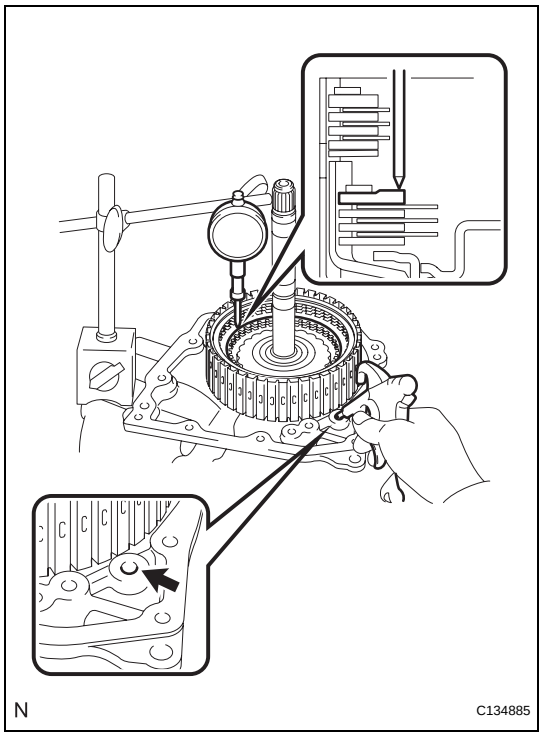

19. INSPECT PACK CLEARANCE OF OVERDRIVE CLUTCH

(a) Using a dial indicator, measure the overdrive clutch pack clearance while applying and releasing compressed air (392 kPa, 4.0 kgf/cm^2, 57 psi).

Pack clearance:

0.52 to 0.83 mm (0.02047 to 0.03268 in.)

If the pack clearance is less than the minimum, parts may have been assembled incorrectly, so check and reassemble.

If the clearance is not as specified, select another flange.

HINT:

There are 7 different thicknesses of flanges available.

Flange thickness: mm (in.)

Mark	Thickness	Mark	Thickness
0	2.5 (0.098)	4	2.9 (0.114)
1	2.6 (0.102)	5	3.0 (0.118)
2	2.7 (0.106)	6	3.1 (0.122)
3	2.8 (0.110)	-	-

cardiagn.com

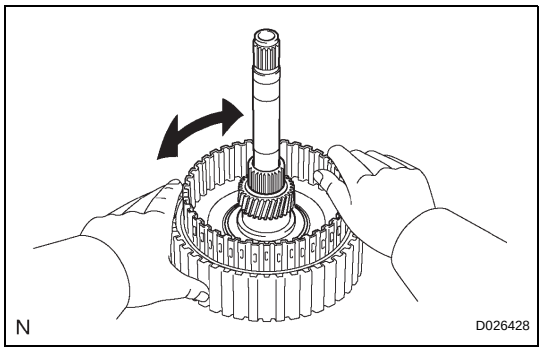

(b) Check that the disc rotates when rotating the disc after inserting the rear planetary sun gear.
NOTICE:
Do not place the rear planetary sun gear in a vise.

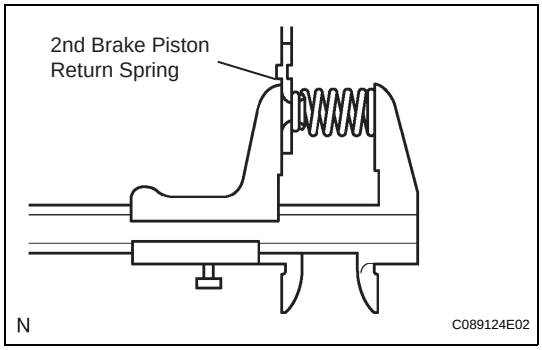

20. INSPECT 2ND BRAKE PISTON RETURN SPRING SUB-ASSEMBLY

(a) Using vernier calipers, measure the free length of the spring together with the spring seat.
Standard free length:
16.61 mm (0.6539 in.)
If the free length is shorter than the standard free length, replace the 2nd brake piston return spring sub-assembly.

cardiagn.com

REASSEMBLY

1. BEARING POSITION

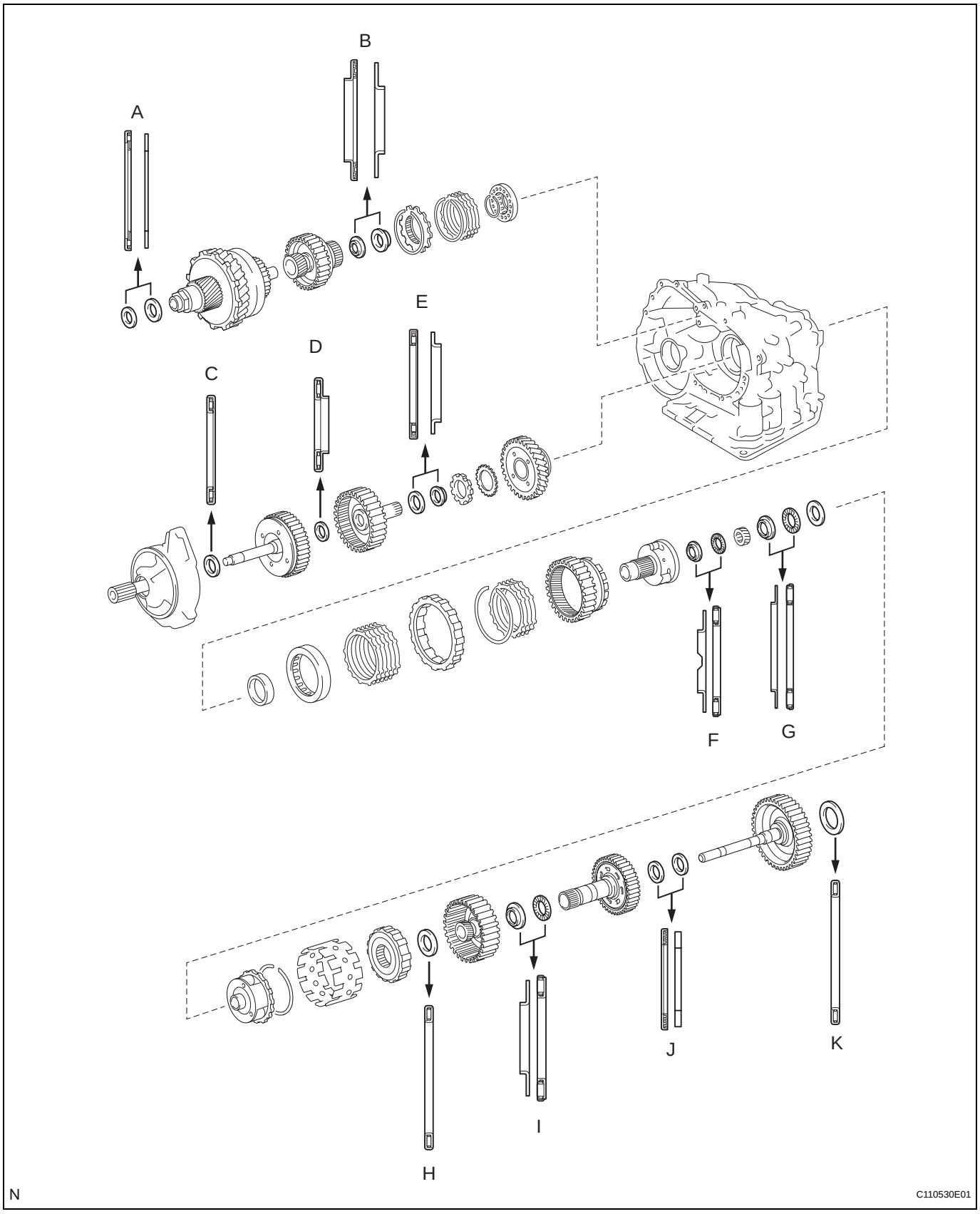

cardiagn.com

Mark	Front Race Diameter Inside / Outside (mm (in.))	Thrust Bearing Diameter Inside / Outside (mm (in.))	Rear Race Diameter Inside / Outside (mm (in.))
A	-	53.0 (2.087) / 78.2 (3.079)	52.1 (2.051) / 75.5 (2.972)
B	-	37.73 (1.4854) / 58.0 (2.284)	29.9 (1.177) / 55.5 (2.185)
C	-	33.85 (1.3327) / 52.2 (2.055)	-
D	-	23.5 (0.925) / 44.0 (1.732)	-
E	-	36.3 (1.429) / 52.2 (2.055)	34.5 (1.358) / 48.5 (1.909)
F	34.5 (1.358) / 56.82 (2.2370)	32.4 (1.276) / 56.62 (2.2291)	-
G	40.3 (1.587) / 58.0 (2.284)	38.6 (1.520) / 60.0 (2.362)	38.6 (1.520) / 58.0 (2.284)
H	-	53.6 (2.110) / 69.6 (2.740)	-
I	33.1 (1.303) / 45.4 (1.787)	31.85 (1.2539) / 45.2 (1.780)	-
J	-	25.0 (0.984) / 39.5 (1.555)	23.6 (0.929) / 36.6 (1.441)
K	-	55.9 (2.201) / 76.0 (2.992) or 76.6 (3.016)	-

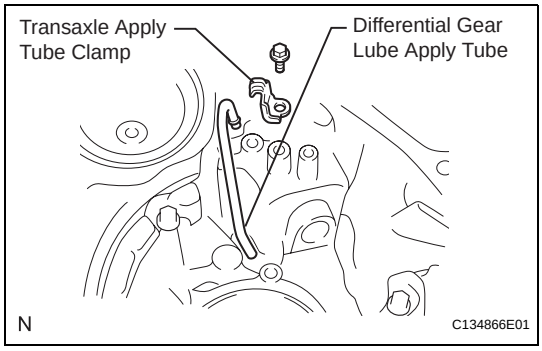

2. INSTALL DIFFERENTIAL GEAR LUBE APPLY TUBE

(a) Install the differential gear lube apply tube and transaxle apply tube clamp to the transaxle housing with the bolt.
Torque: 9.8 N*m (100 kgf*cm, 87 in.*lbf)
NOTICE:
Make sure to insert the pipe to the stopper.

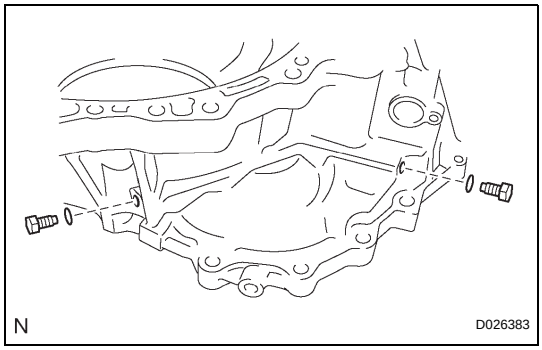

3. INSTALL NO. 1 TRANSAXLE CASE PLUG

(a) Install 2 new O-rings to the 2 No. 1 transaxle case plugs.
(b) Install the 2 No. 1 transaxle case plugs to the transaxle rear housing.
Torque: 7.4 N*m (75 kgf*cm, 65 in.*lbf)

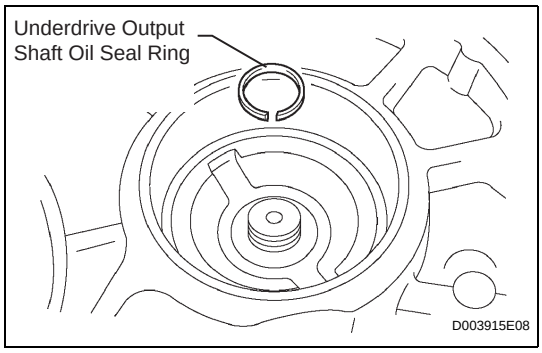

4. INSTALL UNDERDRIVE OUTPUT SHAFT OIL SEAL RING

(a) Coat a new oil seal ring with ATF and install it to the transaxle housing.

cardiagn.com

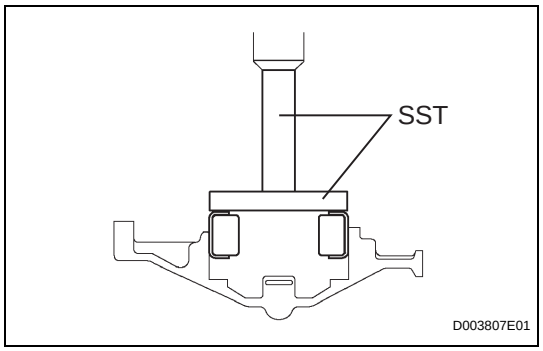

5. INSTALL UNDERDRIVE CYLINDRICAL ROLLER BEARING

(a) Coat the underdrive cylindrical roller bearing with ATF.

(b) Using SST and a press, install the underdrive cylindrical roller bearing.

SST 09950-60020, 09950-70010 (09951-00780, 09951-07100)

NOTICE:

Do not apply excessive pressure to it.

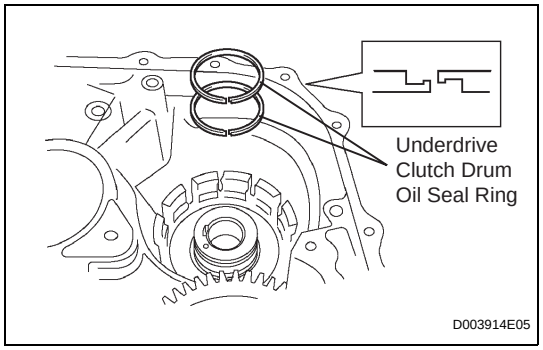

6. INSTALL UNDERDRIVE CLUTCH DRUM OIL SEAL RING

(a) Coat 2 new oil seal rings with ATF, and install them to the transaxle rear cover.

NOTICE:

- **Do not expand the gap of the oil seal ring excessively.**
- **Securely engage the hooks. Confirm the smooth rotation.**

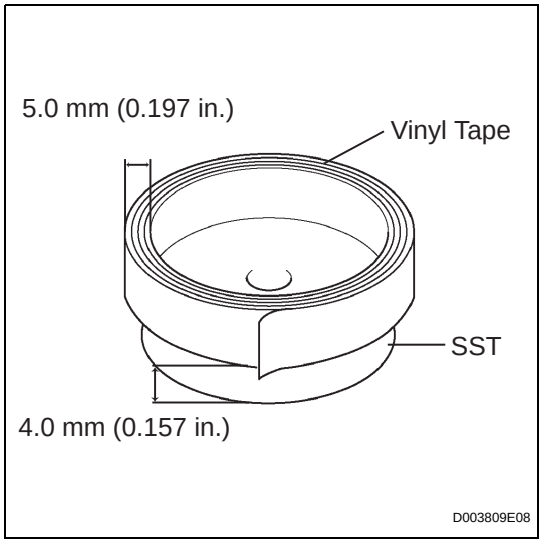

7. INSTALL NEEDLE ROLLER BEARING

(a) Wind vinyl tape around SST at the place 4.0 mm (0.157 in.) above the bottom end until the thickness of the wound tape is about 5.0 mm (0.197 in.).

NOTICE:

Clean SST to remove deposited oil before winding vinyl tape.

(b) Coat a new needle roller bearing with ATF.

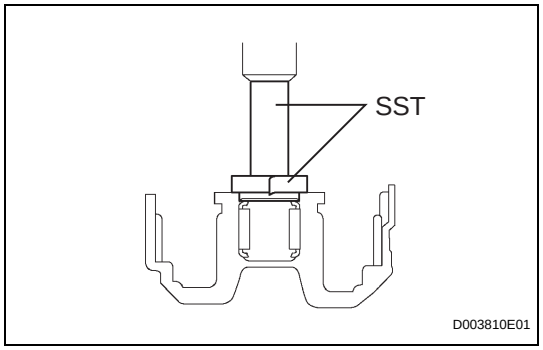

(c) Using SST and a press, install the needle roller bearing to the transaxle case.

SST 09950-60010 (09951-00320), 09950-70010 (09951-07100)

NOTICE:

When the wound vinyl tape contacts the transaxle case, stop press-fitting.

cardiagn.com

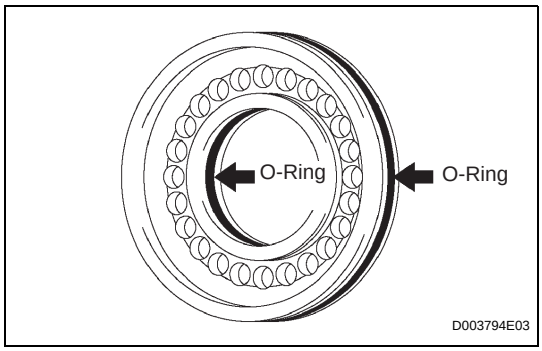

8. INSTALL UNDERDRIVE BRAKE PISTON

(a) Coat 2 new O-rings with ATF, and install them to the underdrive brake piston.

NOTICE:

- **Install the the O-rings carefully not to have a twist or a pinching.**
- **Apply enough ATF to the O-rings prior to installation.**

(b) Coat the underdrive brake piston with ATF.

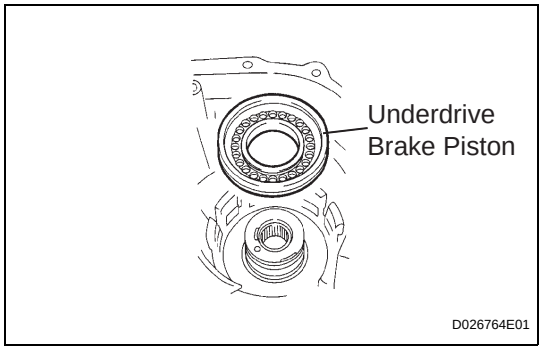

(c) Install the underdrive brake piston to the transaxle case.

NOTICE:

Be careful not to damage the O-rings.

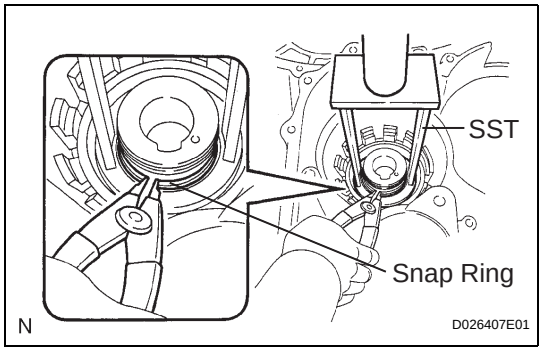

9. INSTALL UNDERDRIVE BRAKE RETURN SPRING SUB-ASSEMBLY

(a) Place SST on the return spring and compress the return spring with a press.

SST 09387-00020

(b) Using a snap ring expander, install the snap ring to the transaxle case.

NOTICE:

- **Stop the press when the spring seat is lowered to the place 1 to 2 mm (0.039 to 0.078 in.) from the snap ring groove to prevent the spring seat from being deformed.**
- **Do not expand the snap ring excessively.**
- **After installing the spring sub-assembly, check all of the springs are fitted in the piston correctly.**
- **The snap ring should be securely engaged in the groove of the transaxle case.**

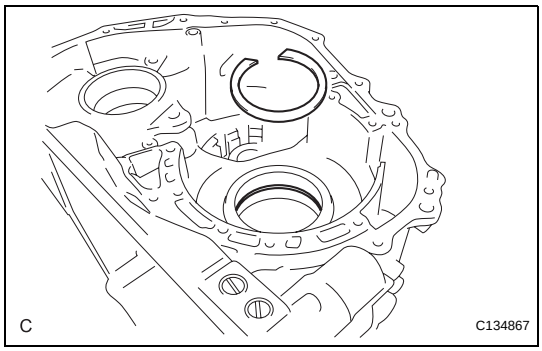

10. INSTALL COUNTER DRIVE GEAR BEARING

(a) Install the snap ring to the transaxle case.

cardiagn.com

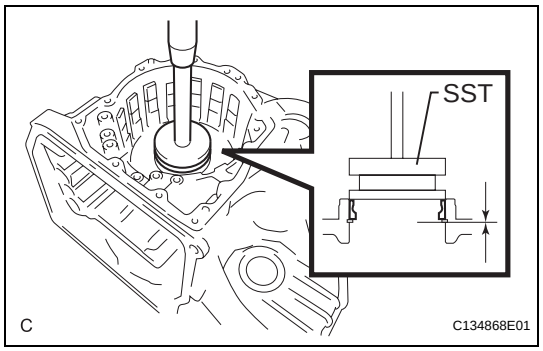

(b) Using SST and a press, install the bearing outer race (rear side) to the transaxle case.
SST 09316-12010, 09950-60020 (09951-00810), 09950-70010 (09951-07150)
NOTICE:
- **Ensure that the snap ring is securely installed.**
- **Do not apply excessive pressure to the bearing outer race.**

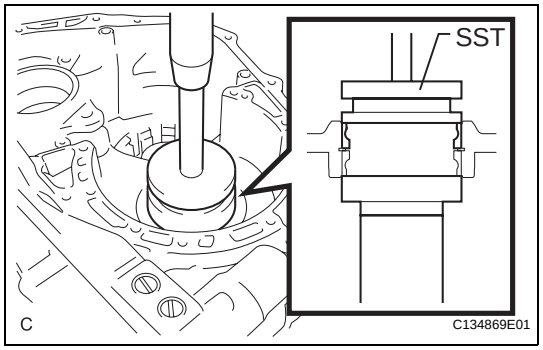

(c) Using SST and a press, install the bearing outer race (front side) to the transaxle case.
SST 09316-12010, 09502-24010, 09523-36010, 09950-60020 (09951-00810), 09950-70010 (09951-07150)
NOTICE:
- **Do not apply excessive pressure to the bearing outer race.**
- **Install the bearing outer race with a press while holding the bearing outer race with SST (09502-24010, 09523-36010).**

(d) Install the 2 angular balls to the transaxle case.

11. INSTALL COUNTER DRIVE GEAR

(a) Coat the counter drive gear with ATF.

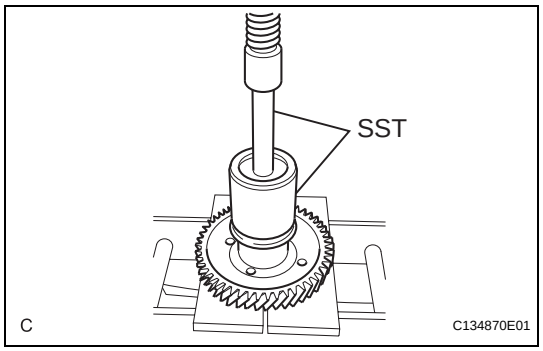

(b) Using SST and a press, install the tapered roller bearing inner race (front side) to the counter drive gear.
SST 09649-17010, 09950-70010 (09951-07150)
NOTICE:
Do not apply excessive pressure to the bearing inner race.

cardiagn.com

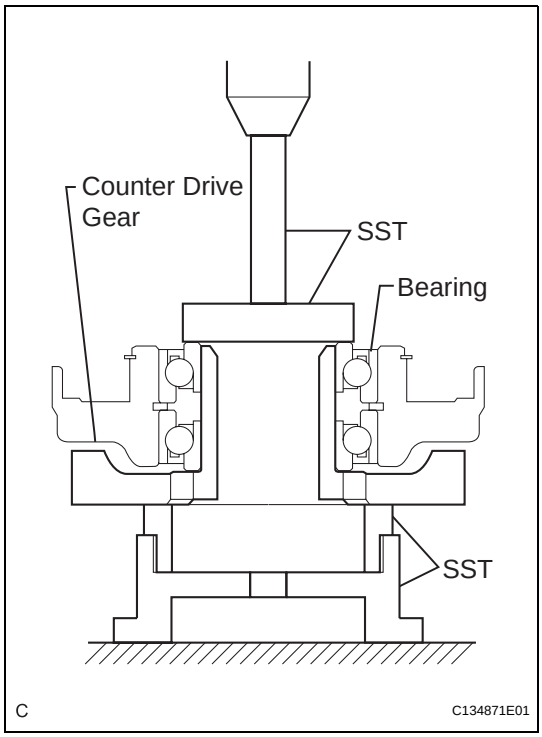

(c) Using SST and a press, install the counter drive gear and bearing inner race (rear side) to the transaxle case.
SST 09223-15030, 09527-17011, 09950-60020 (09951-00720), 09950-70010 (09951-07150)
NOTICE:
Do not apply excessive pressure to the counter drive gear and bearing inner race.

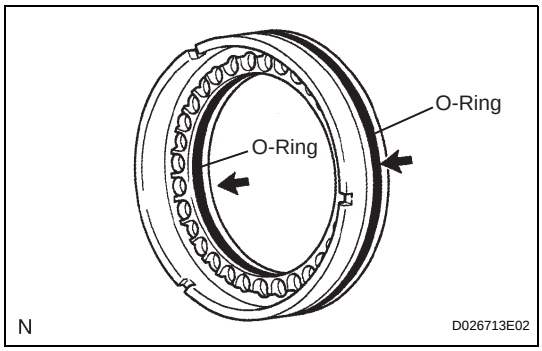

12. INSTALL 1ST AND REVERSE BRAKE PISTON
(a) Coat 2 new O-rings with ATF.
(b) Install the 2 O-rings to the 1st and reverse brake piston.
NOTICE:
- **Install the O-rings carefully not to have a twist or a pinching.**
- **Apply enough ATF to the O-rings prior to installation.**

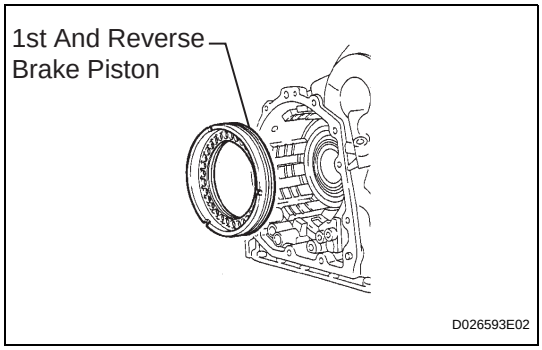

(c) Coat the 1st and reverse brake piston with ATF, and install it to the transaxle case.
NOTICE:
Be careful not to damage the O-rings.

13. INSTALL 1ST AND REVERSE BRAKE RETURN SPRING SUB-ASSEMBLY
(a) Install the return spring.

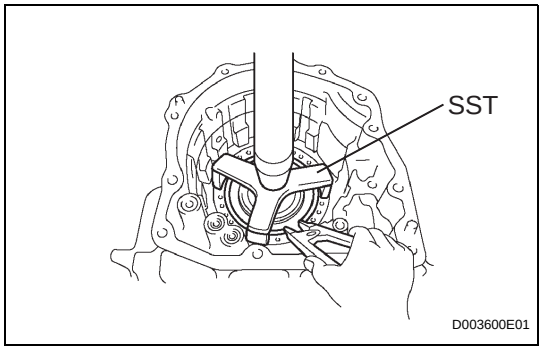

(b) Place SST on the return spring and compress the return spring with a press.
SST 09387-00070
(c) Using a snap ring expander, install the snap ring to the transaxle case.
NOTICE:
- **Stop the press when the spring seat is lowered to the place 1 to 2 mm (0.039 to 0.078 in.) from the snap ring groove to prevent the spring seat from being deformed.**
- **Do not expand the snap ring excessively.**

cardiagn.com

- **After installing the spring sub-assembly, check all of the springs are fitted in the piston correctly.**
- **The snap ring should be securely engaged in the groove of the cylinder.**

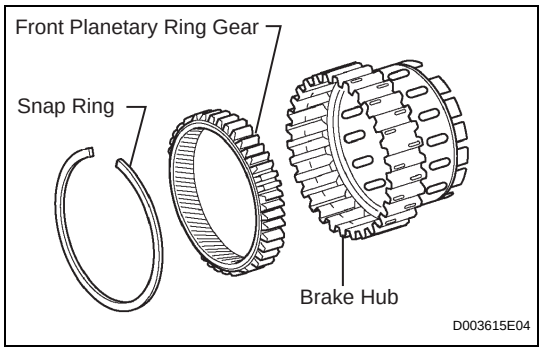

14. INSTALL FRONT PLANETARY RING GEAR

(a) Using a screwdriver, install the front planetary ring gear and snap ring to the brake hub.
NOTICE:
Confirm that the snap ring is engaged in the groove of the brake hub correctly.

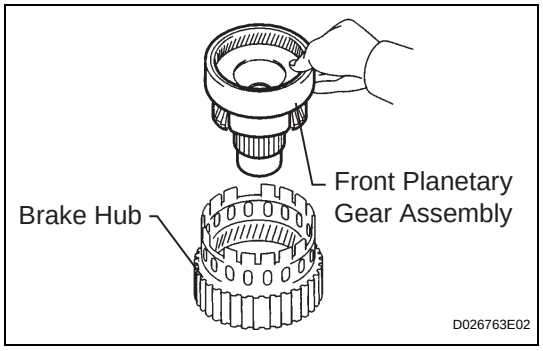

15. INSTALL FRONT PLANETARY GEAR ASSEMBLY

(a) Install the front planetary gear assembly to the brake hub.

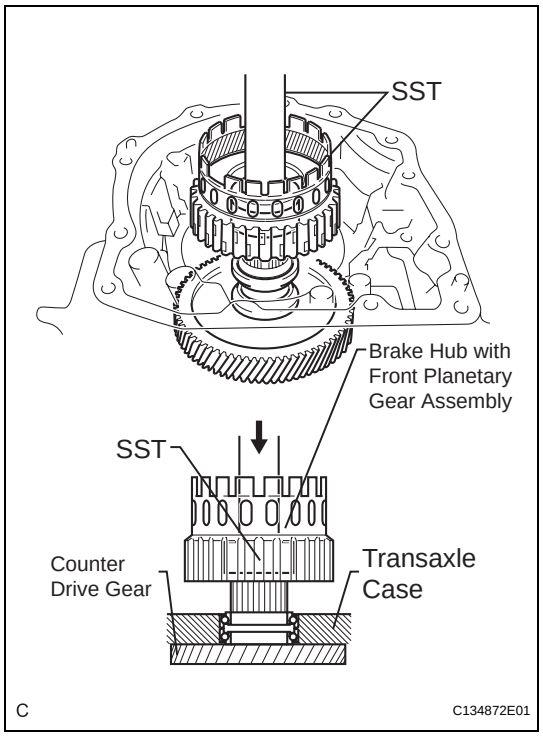

(b) Using SST and a press, press-fit the front planetary gear assembly.
SST 09950-60010 (09951-00500), 09950-70010 (09951-07100)
NOTICE:
- **Do not apply excessive pressure to the front planetary gear assembly.**
- **Press the inner race of the LH tapered roller bearing, counter gear, and front planetary gear assembly to the position where no pre-load is applied to one pair of tapered roller bearings (left and right).**

cardiagn.com

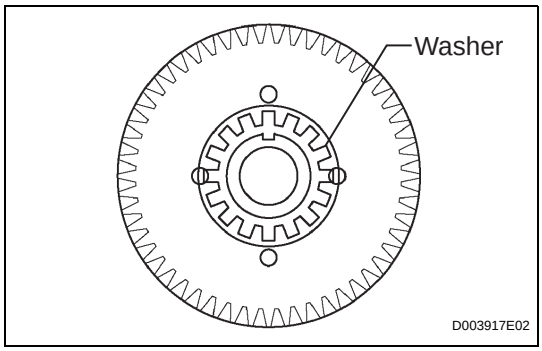

(c) Install a new washer as shown in the illustration.

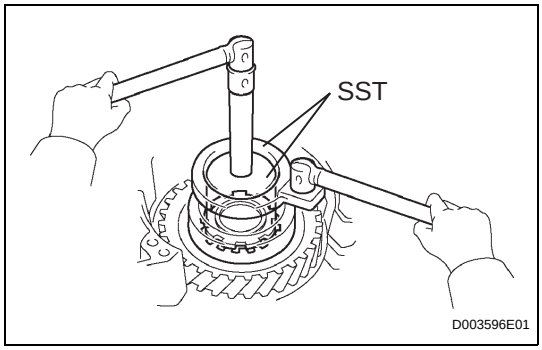

(d) Using SST, install the nut.
SST 09387-00030, 09387-00080
Torque: 185 N*m (1,886 kgf*cm, 136 ft.*lbf)

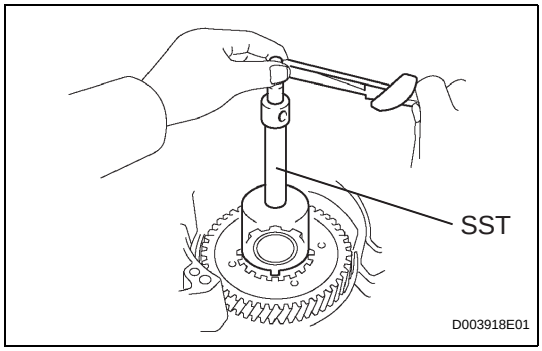

(e) Using SST and a torque wrench, measure the turning torque of the bearing while rotating SST at 60 rpm. If the measured value is not within the specified range, gradually tighten the nut until the turning torque falls within the specified range.
SST 09387-00080
Torque: 350 N*m (3,569 kgf*cm, 258 ft.*lbf) (a limit)
Bearing Turning Torque:
0.19 to 0.4 N*m (1.9 to 4.1 kgf*cm, 1.7 to 3.5 in.*lbf)
HINT:
Use a torque wrench with a fulcrum length of 160 mm (6.3 in.) to measure the turning torque.

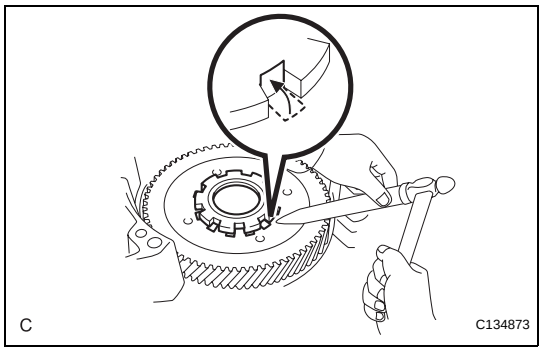

(f) Using a chisel and hammer, stake the front lock washer.

cardiagn.com

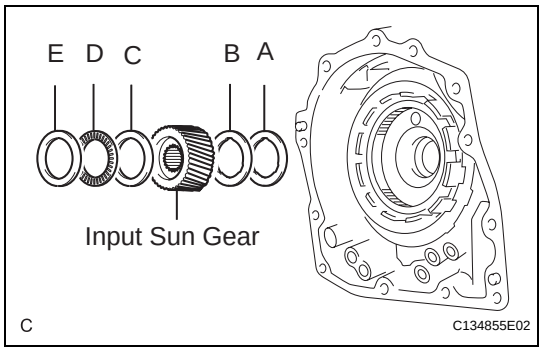

16. INSTALL INPUT SUN GEAR

(a) Coat the 2 thrust bearings with ATF.

(b) Install the input sun gear, 2 thrust needle roller bearings, 2 No. 2 thrust bearing races, and No. 3 thrust bearings to the transaxle case.

NOTICE:

Ensure that the parts are installed in the correct order and direction.

Thrust bearing and bearing race diameter: mm (in.)

	Inside	Outside
Bearing Race, A	34.5 (1.358)	56.82 (2.2370)
Thrust Bearing, B	32.4 (1.276)	56.62 (2.2291)
Bearing Race, C	40.3 (1.587)	58.0 (2.284)
Thrust Bearing, D	38.6 (1.520)	60.0 (2.362)
Bearing Race, E	38.6 (1.520)	58.0 (2.284)

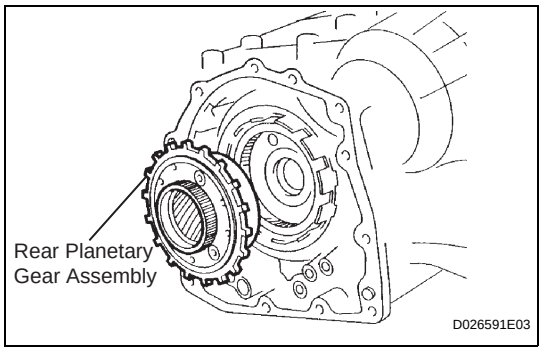

17. INSTALL REAR PLANETARY GEAR ASSEMBLY

(a) Install the rear planetary gear assembly to the brake hub.

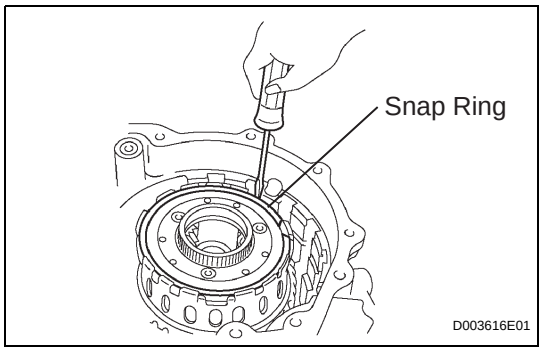

(b) Using a screwdriver, install the snap ring.

NOTICE:

Confirm that the snap ring is engaged in the groove of the 1st and reverse brake hub correctly.

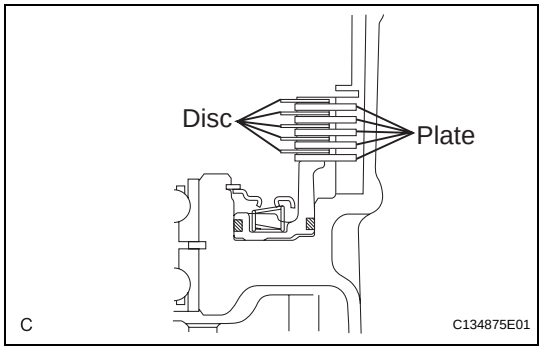

18. INSTALL 1ST AND REVERSE BRAKE DISC

(a) Coat the 5 discs with ATF.

(b) Install the 5 plates and 5 discs.

NOTICE:

Be careful about the order of discs and plates.

19. INSPECT PACK CLEARANCE OF FIRST AND REVERSE BRAKE (See page AX-229)

cardiagn.com

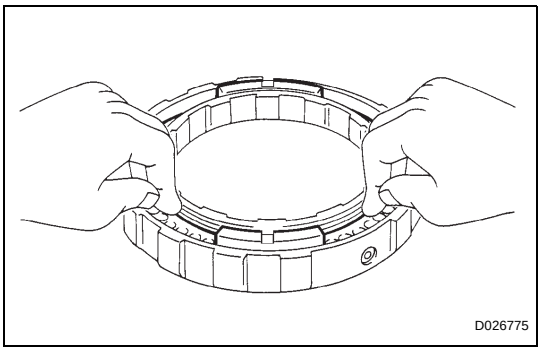

20. INSTALL 2ND BRAKE PISTON

(a) Coat the 2nd brake piston with ATF, and install it to the 2nd brake cylinder.

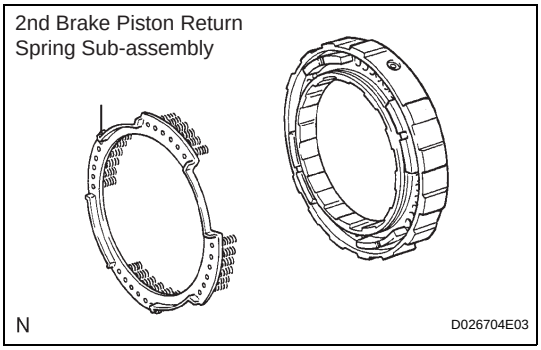

21. INSTALL 2ND BRAKE PISTON RETURN SPRING SUB-ASSEMBLY

(a) Install the 2nd brake piston return spring sub-assembly.
NOTICE:
Ensure that all springs are fitted in the piston correctly.

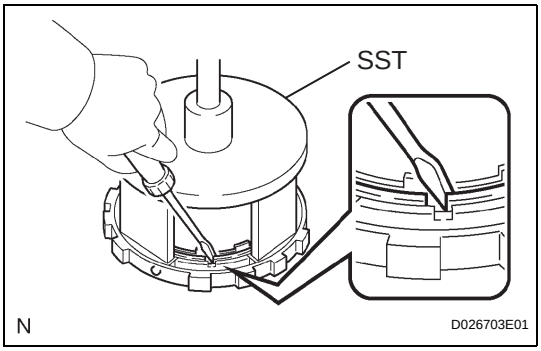

(b) Place SST on the piston return spring, and compress it with a press.
SST 09387-00060

(c) Using a screwdriver, install the snap ring.
NOTICE:
Stop the press when the spring seat is lowered to the place 1 to 2 mm (0.039 to 0.078 in.) from the snap ring groove. This prevents the spring seat from being deformed.

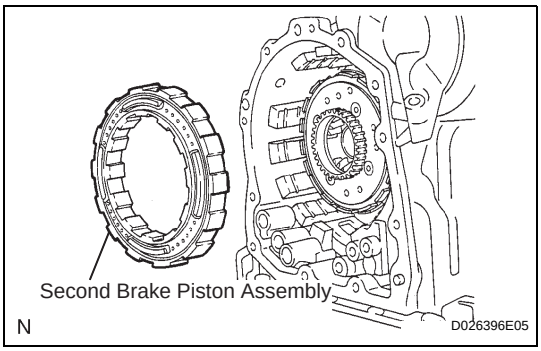

22. INSTALL SECOND BRAKE PISTON ASSEMBLY

(a) Install the second brake piston assembly to the transaxle case.

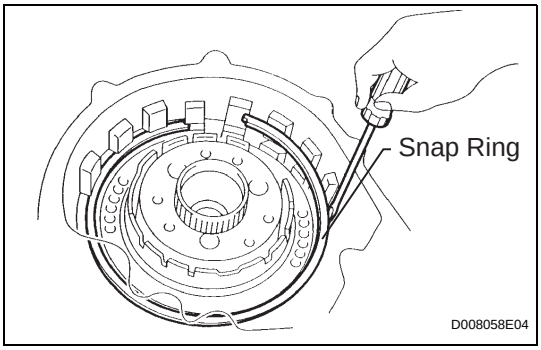

(b) Install the snap ring and measure the inside diameter.
Inside diameter:
More than 167 mm (6.57 in.)
NOTICE:
- **Make sure to install the tapered snap ring in the correct direction.**
- **When the diameter does not meet the specified value, replace the snap ring with a new one.**

cardiagn.com

- **After installing the snap ring, confirm that there is no clearance between the second brake cylinder and the fitting surface of the cylinder in the transaxle case.**

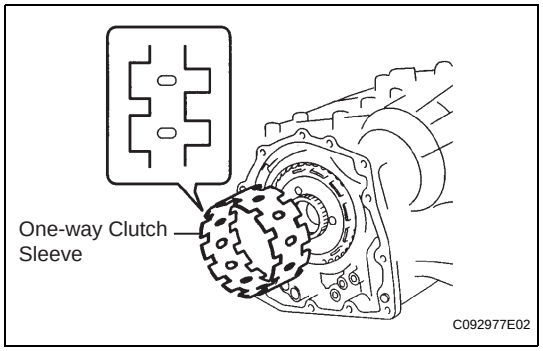

23. INSTALL ONE-WAY CLUTCH SLEEVE

(a) Install the one-way clutch sleeve to the 2nd brake cylinder assembly.
NOTICE:
Check the positioning direction of the outer sleeve.

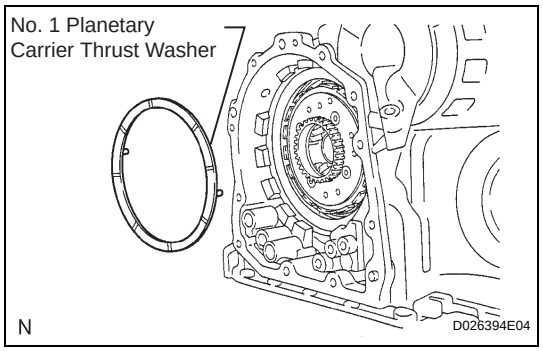

24. INSTALL NO. 1 PLANETARY CARRIER THRUST WASHER

(a) Coat the No. 1 planetary carrier thrust washer with ATF, and install it onto the planetary sun gear assembly.
NOTICE:
After installing the washer, confirm that the projections on the washer are securely fitted in the holes of the planetary sun gear assembly.

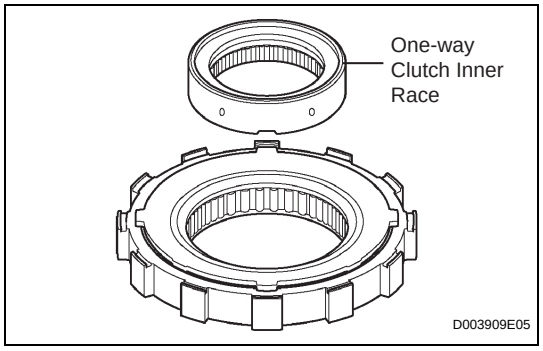

25. INSTALL ONE-WAY CLUTCH ASSEMBLY

(a) Install the one-way clutch inner race to the one-way clutch.
NOTICE:
- **Check the direction of the inner race.**
- **Confirm that the discrimination mark can be seen.**

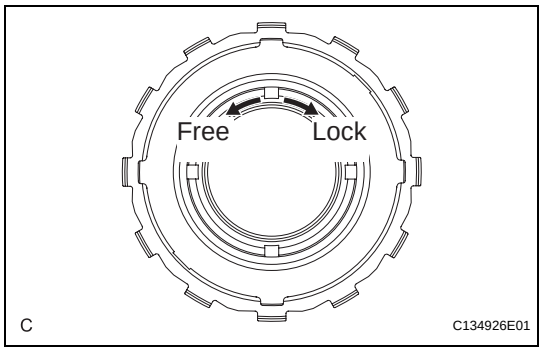

(b) Check the rotating direction of the one-way clutch inner race for the lock or free operation, as shown in the illustration.

cardiagn.com

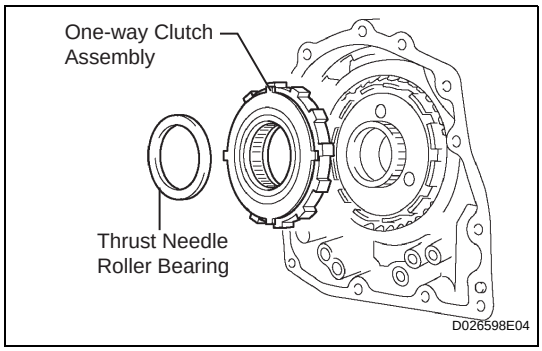

(c) Install the one-way clutch and thrust needle roller bearing to the one-way clutch sleeve outer.
Bearing diameter: mm (in.)

	Inside	Outside
Bearing	53.6 (2.110)	69.4 (2.732)

NOTICE:
Install the thrust bearing properly so that non-colored race will be visible.

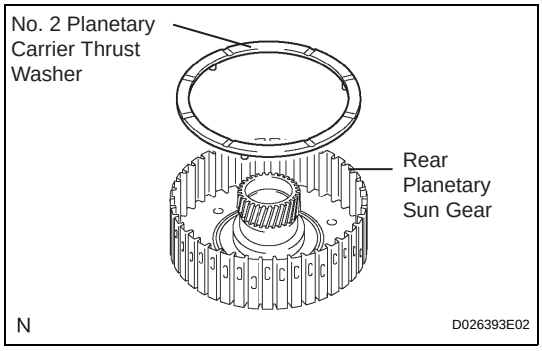

26. INSTALL REAR PLANETARY SUN GEAR ASSEMBLY

(a) Coat the No. 2 planetary carrier thrust washer with ATF, and install it onto the rear planetary sun gear.

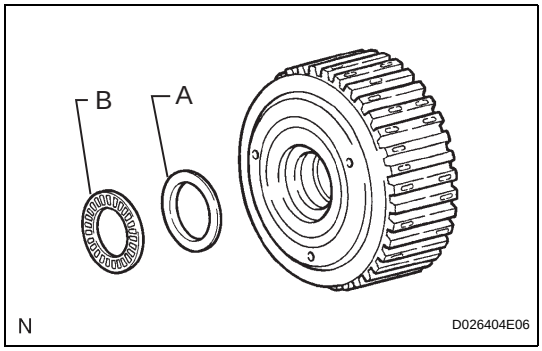

(b) Coat the bearing with yellow petrolatum, and install it onto the rear planetary sun gear.
Bearing diameter: mm (in.)

	Inside	Outside
Race, A	33.1 (1.303)	45.4 (1.787)
Bearing, B	31.85 (1.254)	45.2 (1.78)

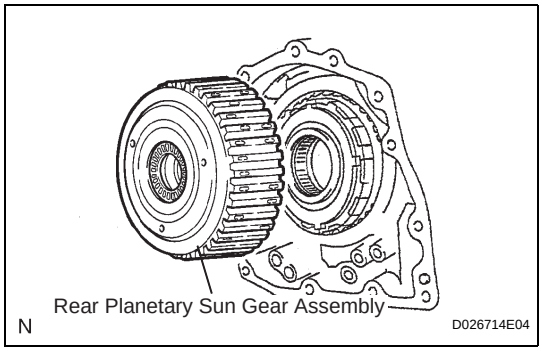

(c) Install the rear planetary sun gear assembly to the rear planetary gear.
NOTICE:
After installing the rear planetary sun gear assembly, confirm that the B1 discs engage.

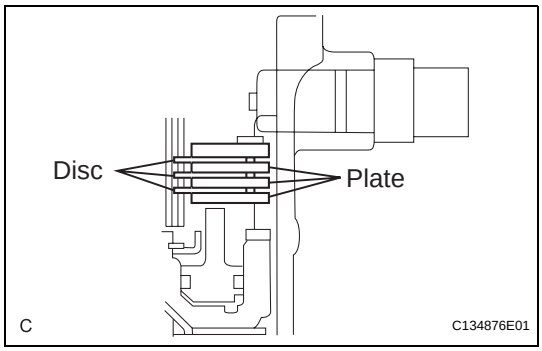

27. INSTALL 2ND BRAKE CLUTCH DISC

(a) Coat the 3 discs with ATF.
(b) Install the 3 discs and 3 plates to the transaxle case.
(c) Install the snap ring.

28. INSPECT PACK CLEARANCE OF SECOND BRAKE

HINT:
See page

cardiagn.com

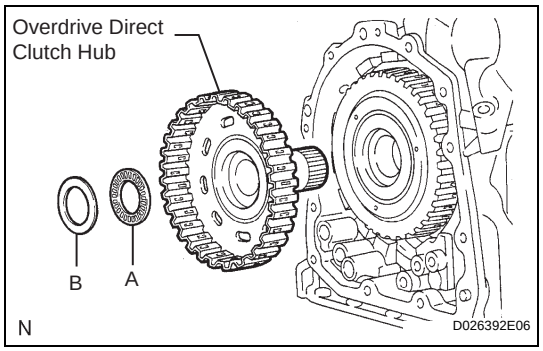

29. INSTALL OVERDRIVE DIRECT CLUTCH HUB SUB-ASSEMBLY

(a) Install the direct clutch hub to the planetary gear assembly.
NOTICE:
Be careful not to damage the bushing inside the overdrive clutch hub during installation.

(b) Coat the thrust bearing with ATF.

(c) Install the bearing race and the thrust bearing to the direct clutch hub.
NOTICE:
When installing the bearing, hold the side of the overdrive clutch hub.
Bearing and race diameter: mm (in.)

	Inside	Outside
Bearing, A	25.0 (0.984)	39.5 (1.555)
Race, B	23.6 (0.929)	36.6 (1.441)

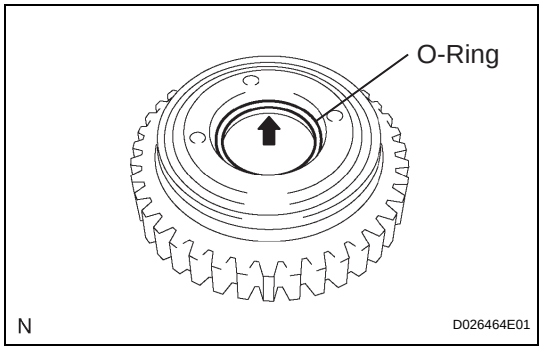

30. INSTALL OVERDRIVE DIRECT CLUTCH O-RING

(a) Coat a new O-ring with ATF, and install it to the direct clutch drum.
NOTICE:
Ensure that the O-ring is not twisted or pinched.

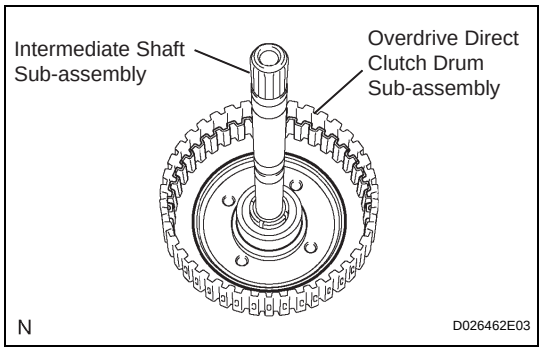

31. INSTALL OVERDRIVE DIRECT CLUTCH DRUM SUB-ASSEMBLY

(a) Coat the direct clutch drum with ATF, and install it to the intermediate shaft.
NOTICE:
- **Be careful not to damage the O-ring.**
- **Be careful not to damage the lip seal of the direct clutch drum.**

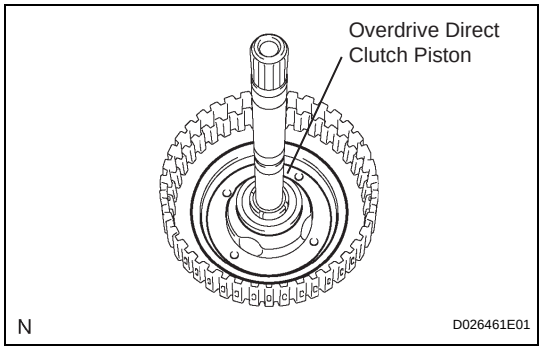

32. INSTALL OVERDRIVE DIRECT CLUTCH PISTON

(a) Coat the overdrive direct clutch piston with ATF, and install it to the overdrive direct clutch drum sub-assembly.
NOTICE:
Be careful not to damage the lip seal of the direct clutch piston.

cardiagn.com

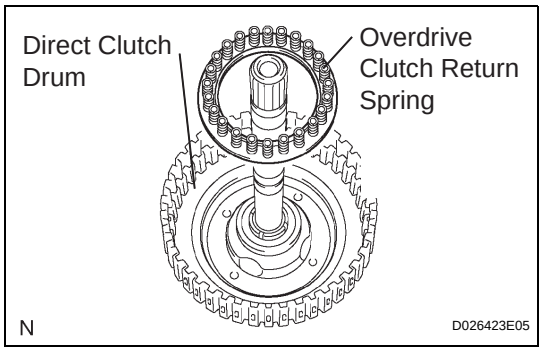

33. INSTALL OVERDRIVE CLUTCH RETURN SPRING SUB-ASSEMBLY

(a) Install the overdrive clutch return spring sub-assembly to the overdrive direct clutch drum sub-assembly.
NOTICE:
When installing the spring sub-assembly, ensure that all springs are fitted in the piston correctly.

(b) Coat the clutch balancer with ATF.

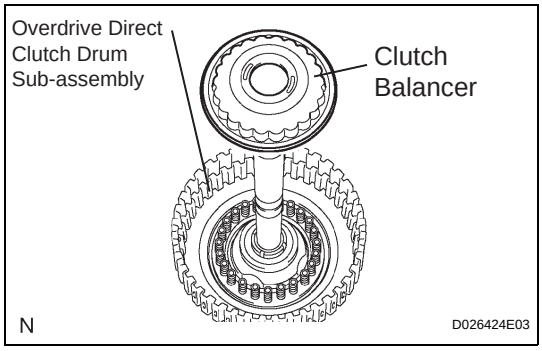

(c) Install the clutch balancer to the overdrive direct clutch drum sub-assembly.
NOTICE:
- **Be careful not to damage the lip seal of the direct clutch balancer.**
- **Ensure that the clutch balancer is not pinched and there are no other defects at the sealing lip.**
- **Apply enough ATF to the sealing lip prior to installation.**

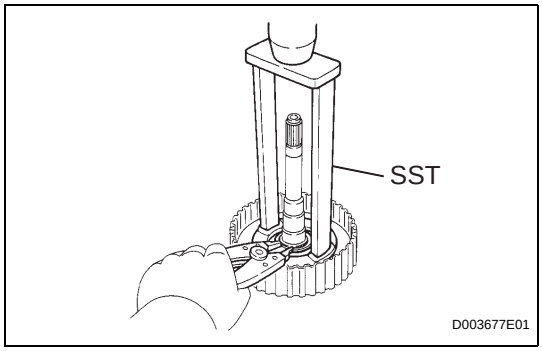

(d) Place SST on the clutch balancer and compress the piston return spring with a press.
SST 09387-00020

(e) Using a snap ring expander, install the snap ring to the direct clutch drum.
NOTICE:
- **Stop the press when the spring seat is lowered to the place 1 to 2 mm (0.039 to 0.078 in.) from the snap ring groove. This prevents the spring seat from being deformed.**
- **Do not expand the snap ring excessively.**

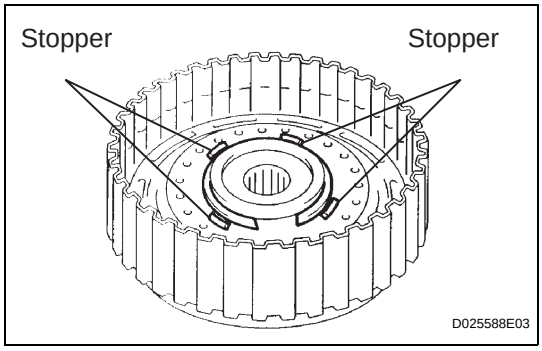

(f) Position the end gap of the snap ring in the piston as shown in the illustration.
NOTICE:
Ensure that the end gap of the snap ring is not aligned with any of the stoppers.

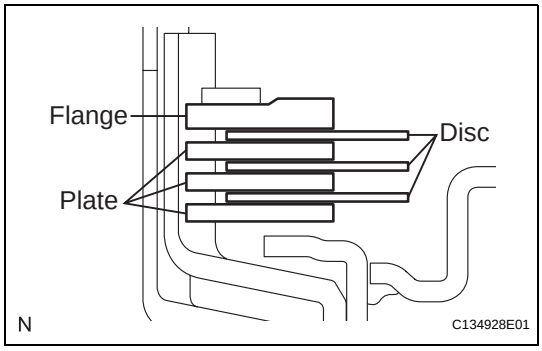

34. INSTALL OVERDRIVE DIRECT CLUTCH DISC

(a) Coat the 3 discs with ATF.

(b) Install the 3 plates, 3 discs and flange to the intermediate shaft.
NOTICE:
Be careful about the order of the discs, plates and flange.

cardiagn.com

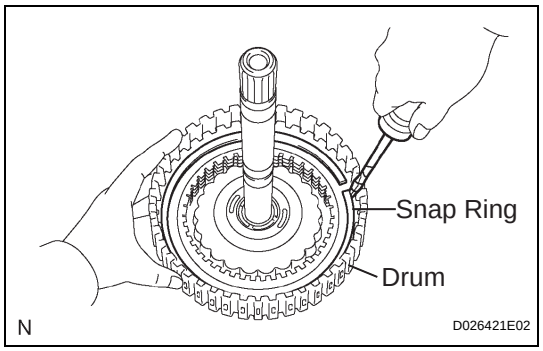

(c) Using a screwdriver, install the snap ring.
NOTICE:
The snap ring should be securely engaged in the groove of the drum.

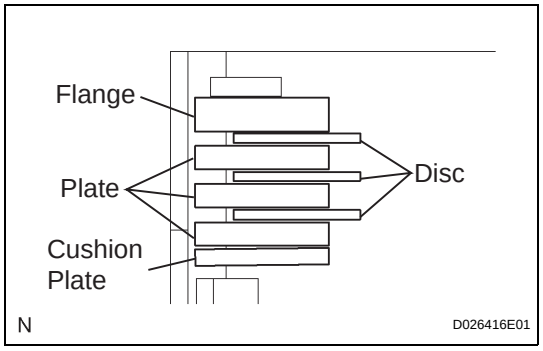

35. INSTALL DIRECT MULTIPLE DISC CLUTCH DISC
(a) Coat the 3 discs with ATF.
(b) Install the cushion plate, 3 plates, 3 discs and flange to the intermediate shaft.
NOTICE:
- **Install the cushion plate with the mark on the white surface facing the plate.**
- **Be careful about the order of discs, plates and flange.**

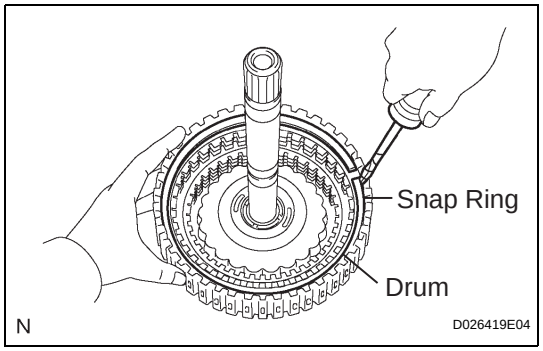

(c) Using a screwdriver, install the snap ring.
NOTICE:
The snap ring should be securely engaged in the groove of the drum.

36. INSPECT PACK CLEARANCE OF DIRECT CLUTCH (See page AX-232)

37. INSPECT PACK CLEARANCE OF OVERDRIVE CLUTCH (See page AX-232)

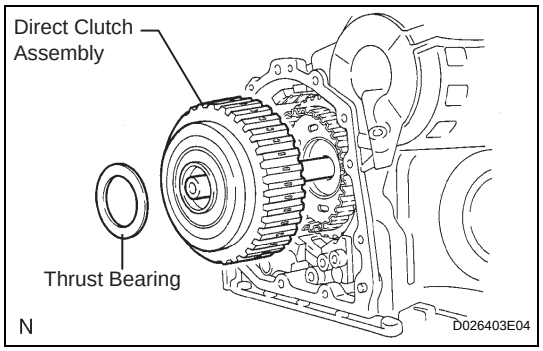

38. INSTALL DIRECT CLUTCH ASSEMBLY
(a) Coat the thrust bearing with ATF.
(b) Install the direct clutch assembly and thrust bearing to the rear planetary sun gear assembly.
NOTICE:
The disc in the direct clutch should completely match with the hub attached outside the rear planetary sun gear. Otherwise, the rear cover cannot be installed.

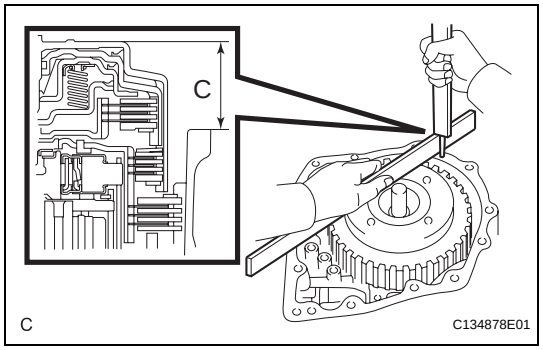

(c) Clean the contact surfaces of the transaxle case and the rear cover.
(d) As shown in the illustration, place a straight edge on the direct clutch drum and measure the distance between the transaxle case and the straight edge using vernier calipers (Dimension C).

cardiagn.com

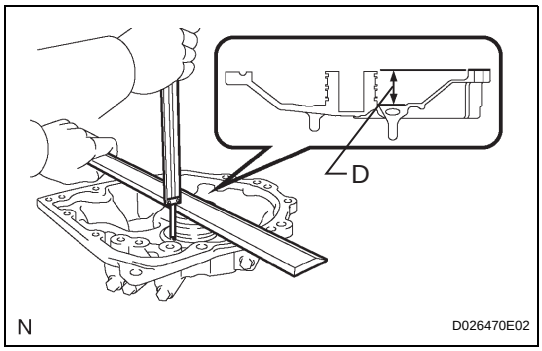

(e) Using vernier calipers and a simple straight edge, measure the dimension shown in the illustration.

(f) Calculate the end play value using the following formula. Select a thrust bearing which satisfies the specified end play value and install it.

End play:

0.199 to 0.970 mm (0.0078 to 0.0382 in.)

NOTICE:

Make sure that the non-colored race side is facing the direct clutch assembly.

HINT:

End play = Dimension D - Dimension C

Bearing thickness and diameter: mm (in.)

Thickness	Inside	Outside
3.6 (0.1417)	55.9 (2.201)	76.0 (2.992)
3.8 (0.150)	55.9 (2.201)	76.6 (3.016)

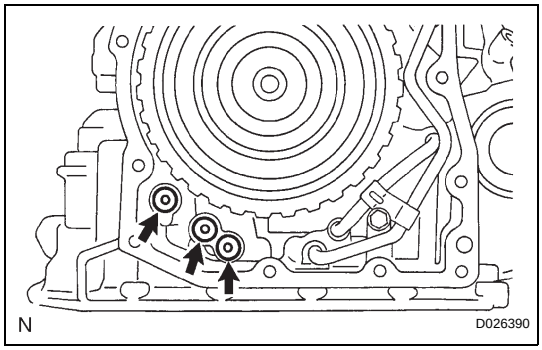

39. INSTALL NO. 1 GOVERNOR APPLY GASKET

(a) Install 3 new No. 1 governor apply gaskets to the transaxle case.

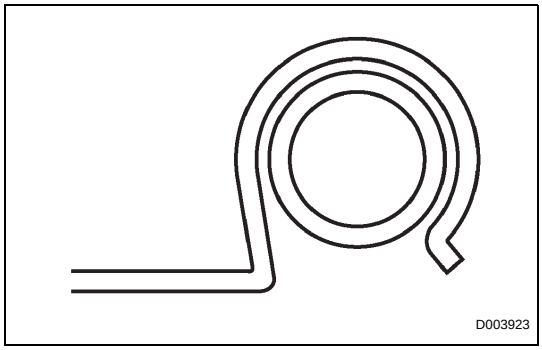

40. INSTALL BRAKE APPLY TUBE

(a) Install the clamp to the brake apply tube.

NOTICE:

Make sure to install the clamp to the apply tube before installing the apply tube to the transaxle case. This prevents the apply tube from being deformed or damaged.

(b) Install the clutch apply tube.

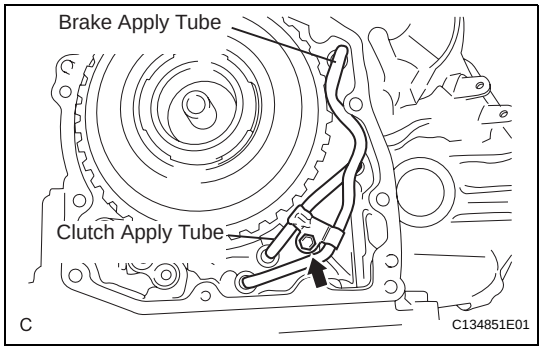

(c) Install the brake apply tube to the transaxle case with the bolt.

Torque: 5.4 N*m (55 kgf*cm, 48 in.*lbf)

NOTICE:

Each pipe should be securely inserted until it reaches the stopper.

cardiagn.com

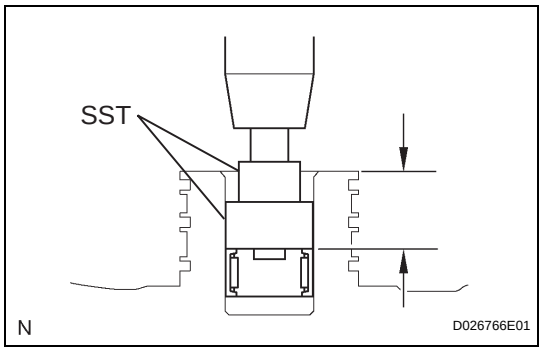

41. INSTALL NEEDLE ROLLER BEARING

(a) Using SST and a press, install the needle roller bearing to the transaxle rear cover.

SST 09950-60010 (09951-00230, 09952-06010, 09951-00360)

Press fit depth:

20.55 to 21.25 mm (0.8091 to 0.8366 in.)

NOTICE:

- **Face the inscribed mark side of the bearing race up.**
- **Keep pressing until the specified value is obtained.**

(b) Coat the needle roller bearing with ATF.

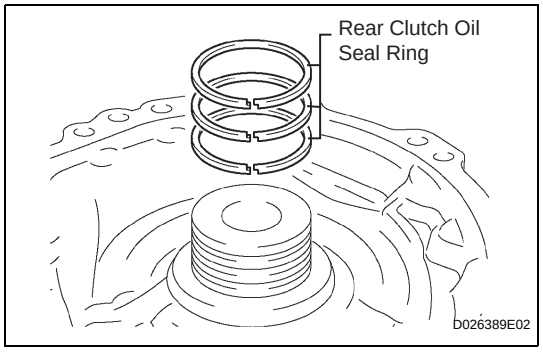

42. INSTALL REAR CLUTCH OIL SEAL RING OUTER

(a) Coat 3 new rear clutch oil seal rings with ATF, and install them to the transaxle rear cover.

NOTICE:

The rear clutch oil seal rings should be securely engaged in the grooves of the drum.

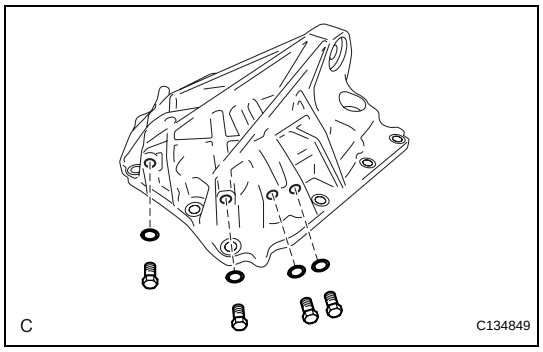

43. INSTALL NO. 1 TRANSAXLE CASE PLUG

(a) Install 4 new O-rings to the 4 No. 1 transaxle case plugs.

(b) Install the 4 No. 1 transaxle case plugs to the transaxle rear cover.

Torque: 7.4 N*m (75 kgf*cm, 65 in.*lbf)

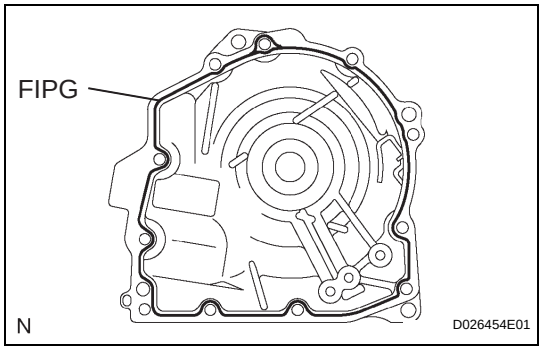

44. INSTALL TRANSAXLE REAR COVER SUB-ASSEMBLY

(a) Remove any packing material and keep the contact surfaces of the transaxle rear cover and the transaxle case away from oil.

(b) Apply FIPG to the cover.

FIPG:

Toyota Genuine Seal Packing 1281, Three Bond 1281 or Equivalent

NOTICE:

Apply FIPG in a continuous line (width 1.2 mm (0.047 in.)) along the sealing surface.

cardiagn.com

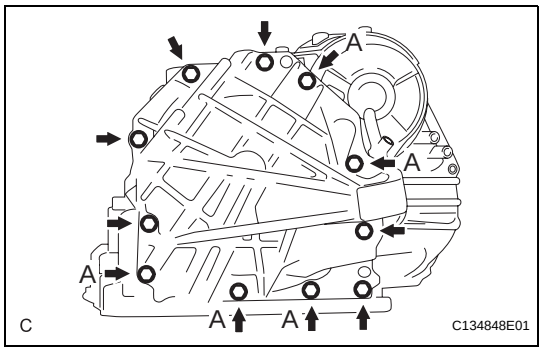

(c) Apply liquid sealer to the threads of bolt A.
Sealant:
Toyota Genuine Adhesive 1344, Three Bond 1344 or Equivalent

(d) Install the 11 bolts.
Torque: Bolt A
19 N*m (190 kgf*cm, 14 ft.*lbf)
Other bolts
25 N*m (250 kgf*cm, 18 ft.*lbf)

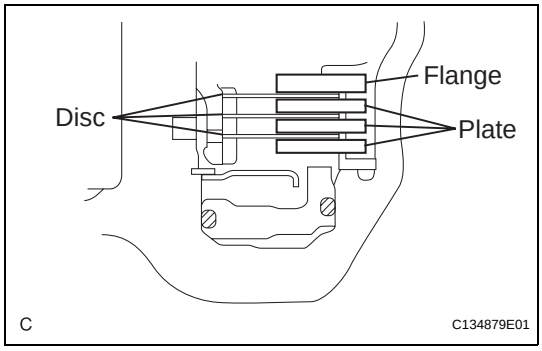

45. INSTALL NO. 2 UNDERDRIVE CLUTCH DISC

(a) Coat the 3 discs with ATF.

(b) Install the 3 discs, 3 plates and flange to the transaxle case.
NOTICE:
Be careful about the order of discs, plates and flange.

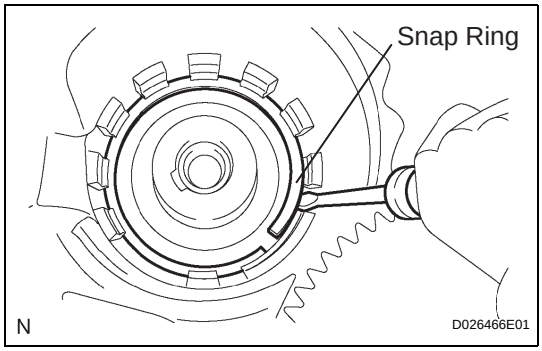

(c) Using a screwdriver, install the snap ring.
NOTICE:
The snap ring should be securely engaged in the groove of the drum.

46. INSPECT PACK CLEARANCE OF NO. 2 UNDERDRIVE CLUTCH (See page AX-230)

47. INSPECT UNDERDRIVE ONE-WAY CLUTCH ASSEMBLY (See page AX-230)

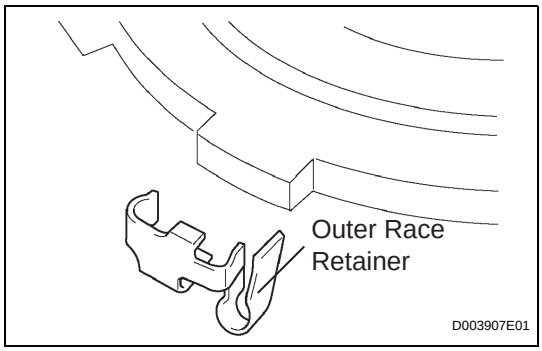

48. INSTALL UNDERDRIVE ONE-WAY CLUTCH ASSEMBLY

(a) Install the outer race retainer to the one-way clutch.
NOTICE:
Securely install the outer race retainer onto the external tooth of the one-way clutch.

cardiagn.com

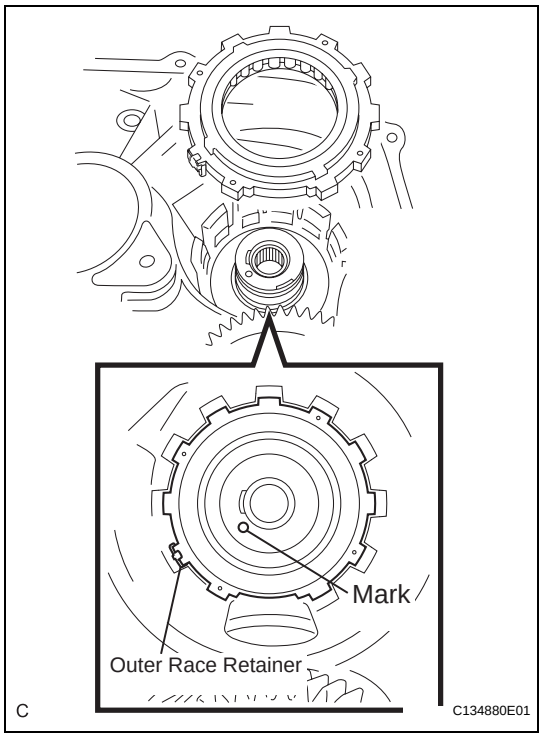

(b) Install the one-way clutch to the transaxle case.
NOTICE:
Ensure that the outer race retainer and the mark on the transaxle case are aligned.

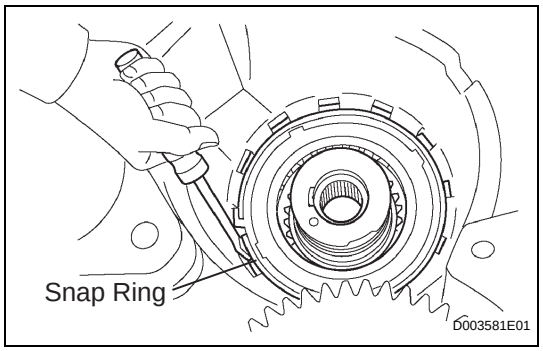

(c) Using a screwdriver, install the snap ring to the transaxle case.
NOTICE:
The snap ring should be securely engaged in the groove of the transaxle case.

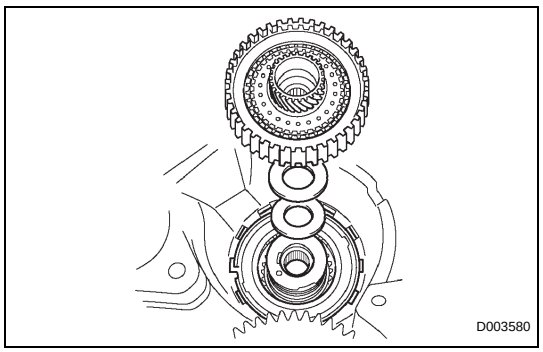

49. INSTALL UNDERDRIVE CLUTCH ASSEMBLY

(a) Coat the bearing and bearing race with ATF, and install them onto the underdrive clutch.
Bearing and bearing race diameter: mm (in.)

	Inside	Outside
Bearing	37.73 (1.4854)	58.0 (2.284)
Race	29.9 (1.177)	55.5 (2.185)

(b) Install the underdrive clutch assembly to the transaxle case.
NOTICE:
When installing the underdrive clutch drum sub-assembly, do not damage the oil seal ring.

cardiagn.com

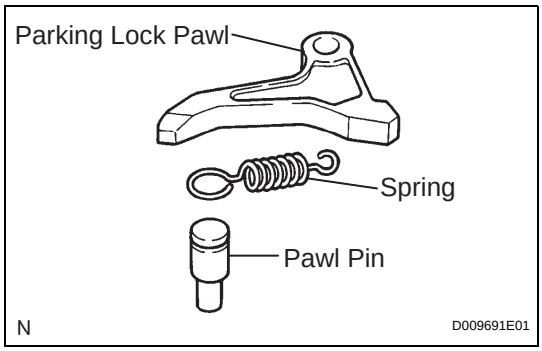

50. INSTALL PARKING LOCK PAWL

(a) Install the pawl pin and spring to the parking lock pawl.

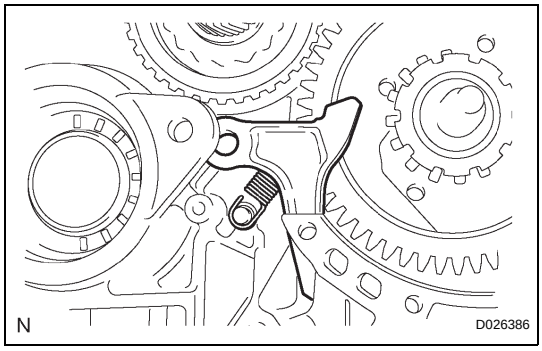

(b) Temporarily install the parking lock pawl, pin and spring to the transaxle case as shown in the illustration.

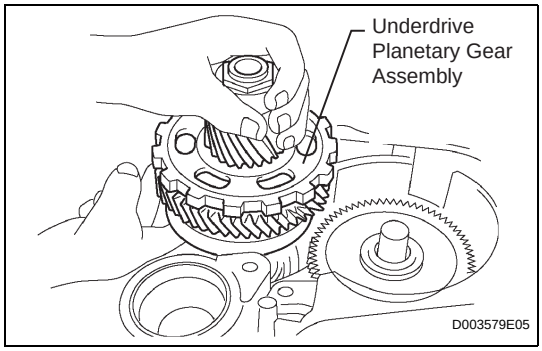

51. INSTALL UNDERDRIVE PLANETARY GEAR ASSEMBLY

(a) Install the underdrive planetary gear assembly to the transaxle case.

NOTICE:

Firmly engage all the discs of the underdrive clutch with the hub splines of the underdrive planetary gear assembly and securely assemble them.

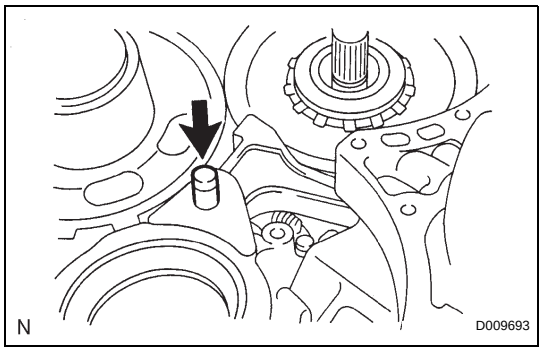

(b) Install the parking lock pawl shaft.

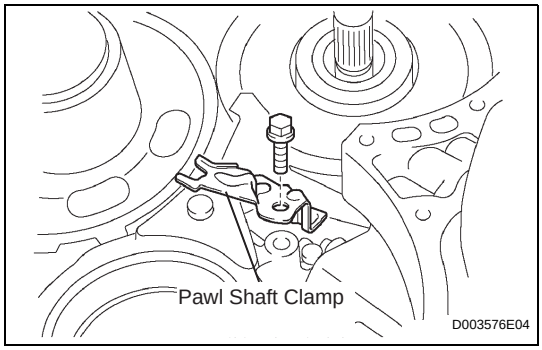

(c) Install the pawl shaft clamp with the bolt.

Torque: 9.8 N*m (100 kgf*cm, 87 in.*lbf)

cardiagn.com

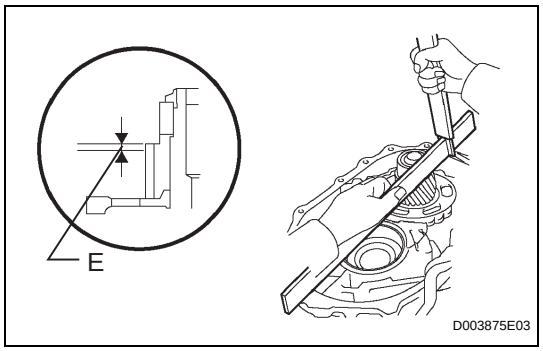

(d) Using a straight edge and vernier calipers as shown in the illustration, measure the gap between the top of the differential drive pinion in the underdrive planetary gear and contact surface of the transaxle case and housing (Dimension E).
NOTICE:
Note down dimension E because it is necessary for the following process.

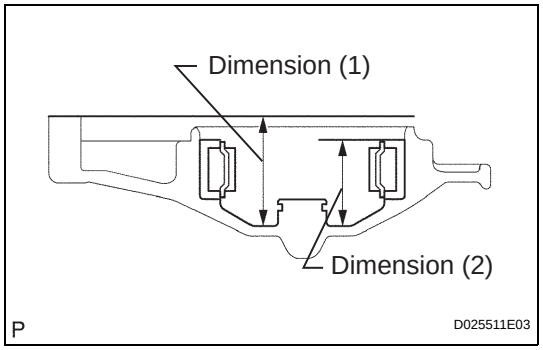

(e) As shown in the illustration, measure the 2 places of the transaxle housing, and calculate dimension F using the following formula.
NOTICE:
Note down dimension F because it is necessary for the following process.
HINT:
Dimension F = Dimension (1) - Dimension (2)

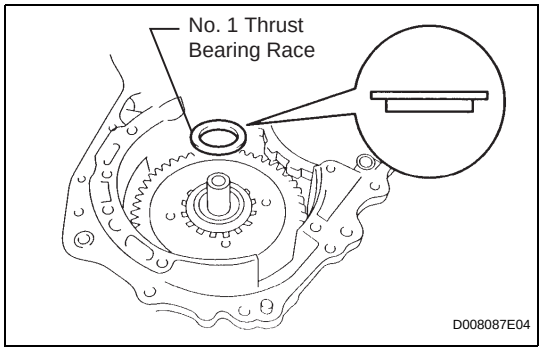

52. INSTALL MULTIPLE DISC CLUTCH HUB

(a) Install the No. 1 thrust bearing race to the transaxle case while checking its direction.
Bearing race diameter: mm (in.)

	Inside	Outside
Bearing Race	34.5 (1.359)	48.5 (1.909)

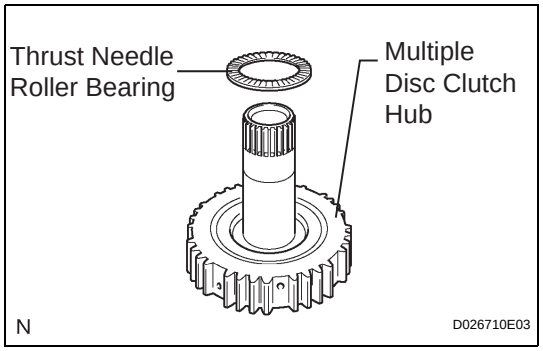

(b) Coat the thrust needle roller bearing and race with ATF, and install them onto the multiple disc clutch hub.
Thrust bearing and race diameter: mm (in.)

	Inside	Outside
Thrust Bearing	36.4 (1.433)	52.2 (2.055)

(c) Coat the needle roller bearing with ATF.

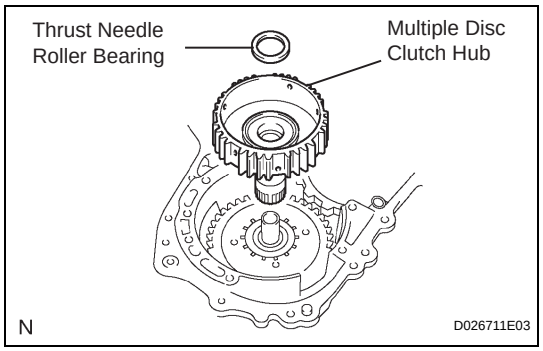

(d) Install the needle roller bearing to the multiple disc clutch hub.
Bearing diameter: mm (in.)

	Inside	Outside
Bearing	23.5 (0.925)	44.0 (1.732)

(e) Install the multiple disc clutch hub to the transaxle case.

cardiagn.com

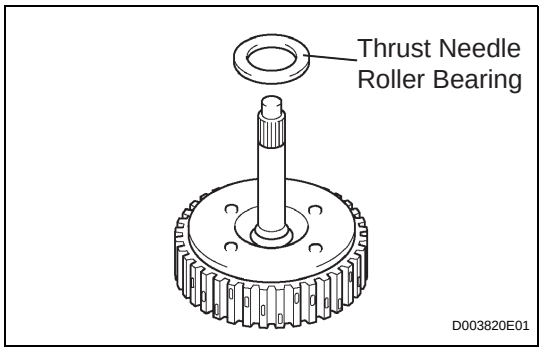

53. INSTALL FORWARD CLUTCH ASSEMBLY

(a) Coat the thrust needle roller bearing with ATF.

(b) Install the thrust needle roller bearing to the forward clutch.

Thrust bearing diameter: mm (in.)

	Inside	Outside
Thrust Bearing	33.85 (1.3327)	52.2 (2.0551)

NOTICE:
Install the thrust bearing properly so that the temper colored side of the race will be visible.

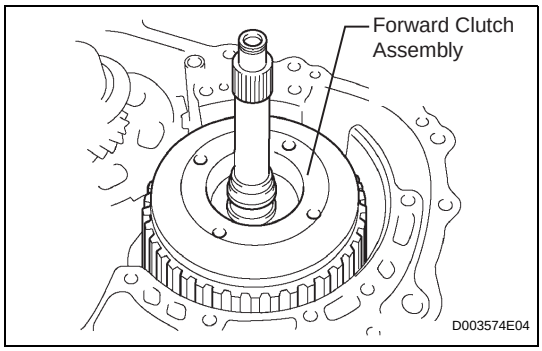

(c) Install the forward clutch to the forward clutch assembly.

NOTICE:
- **Align the splines of all discs in the forward clutch with those of the multiple clutch hub to assemble them securely.**
- **Be careful not to damage the bush inside the forward clutch hub during installation.**

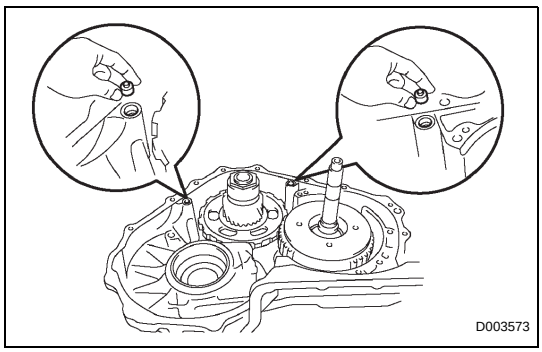

54. INSTALL OVERDRIVE BRAKE GASKET

(a) Install 2 new overdrive brake gaskets.

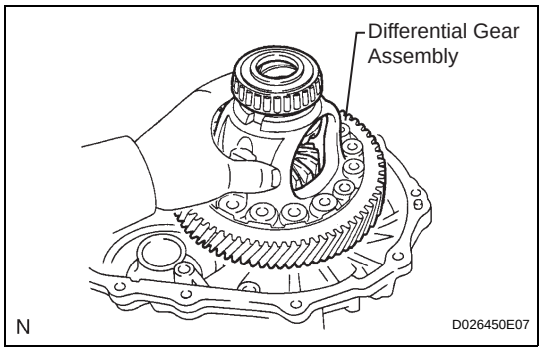

55. INSTALL DIFFERENTIAL GEAR ASSEMBLY

(a) Install the differential gear assembly to the transaxle case.

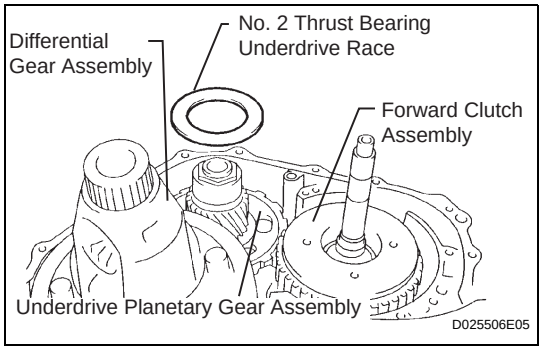

56. INSTALL NO. 2 THRUST BEARING UNDERDRIVE RACE

(a) Install the No. 2 thrust bearing underdrive race to the underdrive planetary gear assembly.

cardiagn.com

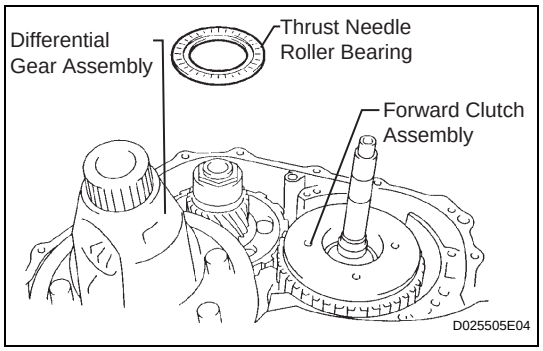

57. INSTALL THRUST NEEDLE ROLLER BEARING

(a) Coat the thrust needle roller bearing with ATF.

(b) Calculate the end play value using the following formula and values of Dimensions E and F that ware measured when installing the cylindrical roller bearing and underdrive planetary gear. Select an appropriate underdrive planetary gear thrust bearing race No. 2 which satisfies the specified end play value, and install it.

End play:

0.198 to 0.693 mm (0.00779 to 0.02728 in.)

HINT:

End play = Dimension F - Dimension E - Thrust bearing thickness 2.5 mm (0.0984 in.) - Underdrive thrust bearing race No. 2 thickness.

Race thickness: mm (in.)

F - E	Thickness
Less than 7.339 (0.28894)	3.5 (0.138)
7.339 (0.28894) or more	3.8 (0.150)

Bearing and bearing race diameter: mm (in.)

	Inside	Outside
Bearing	53.0 (2.087)	78.2 (3.079)
Bearing race	52.1 (2.051)	75.5 (2.972)

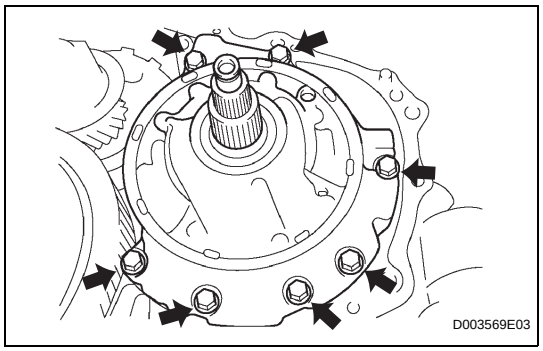

58. INSTALL OIL PUMP ASSEMBLY

(a) Install the oil pump to the transaxle case with the 7 bolts.

Torque: 22 N*m (225 kgf*cm, 16 ft.*lbf)

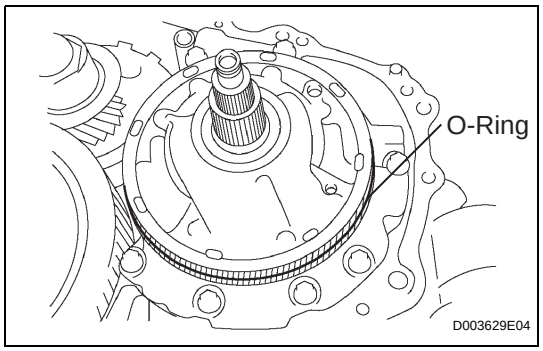

(b) Coat the O-ring of the oil pump with ATF.

NOTICE:

Confirm the input shaft rotates smoothly with the manual operation after installing the oil pump.

cardiagn.com

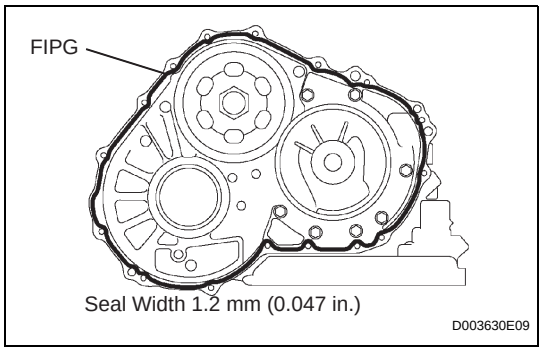

59. INSTALL TRANSAXLE HOUSING

(a) Remove any parking material and keep the contact surfaces of the transaxle case and transaxle housing away from oil.

(b) Apply FIPG to the transaxle case.

FIPG:

Toyota Genuine Seal Packing 1281, Three Bond 1281 or Equivalent

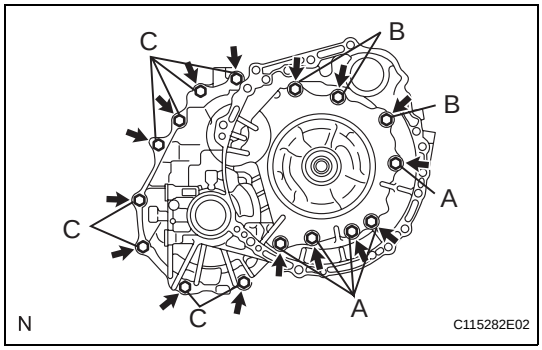

(c) Install the transaxle housing to the transaxle case with the 16 bolts.

Torque: Bolt A
22 N*m (225 kgf*cm, 16 ft.*lbf)
Bolt B
29 N*m (296 kgf*cm, 21 ft.*lbf)
Bolt C
29 N*m (296 kgf*cm, 21 ft.*lbf)

HINT:
Apply seal packing or equivalent to bolts A and C.

Seal packing:
Toyota Genuine Seal Packing 1344, Three Bond 1344 or Equivalent

Bolt length
Bolt A:
50 mm (1.969 in.)
Bolt B:
50 mm (1.969 in.)
Bolt C:
42 mm (1.654 in.)

NOTICE:
Apply seal packing to new bolts and tighten them within 10 minutes of application.

60. INSPECT INPUT SHAFT END PLAY (See page AX-231)

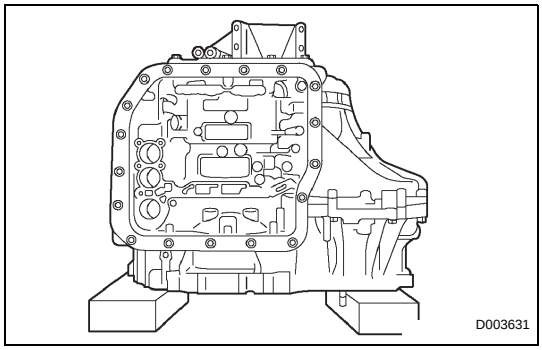

61. FIX AUTOMATIC TRANSAXLE ASSEMBLY

(a) Fix the transaxle assembly.

cardiagn.com

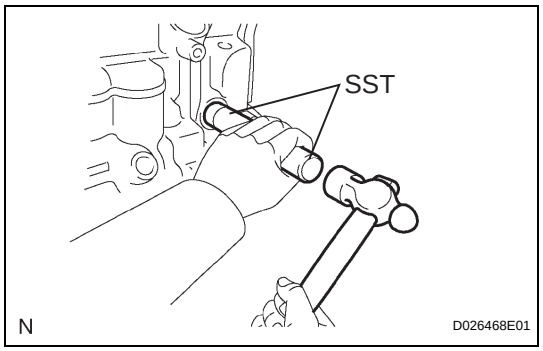

62. INSTALL MANUAL VALVE LEVER SHAFT OIL SEAL

(a) Coat a new oil seal with MP grease.

(b) Using SST, install the oil seal to the transaxle case.

SST 09950-60010 (09951-00230), 09950-70010 (09951-07100)

Oil seal drive in depth:
-0.5 to 0.5 mm (-0.0197 to 0.0197 in.)

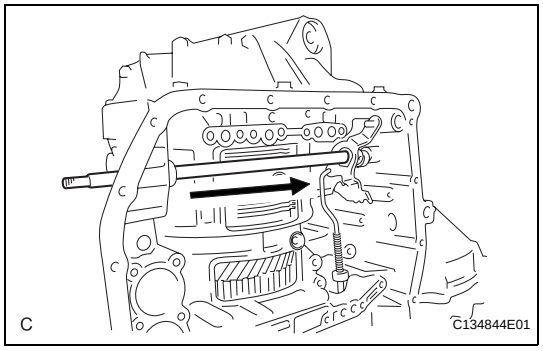

63. INSTALL PARKING LOCK ROD SUB-ASSEMBLY

(a) Install the parking lock rod to the manual valve lever.
HINT:
Align the dial with the notches on the manual valve lever and turn the dial 90° to install the parking lock rod.

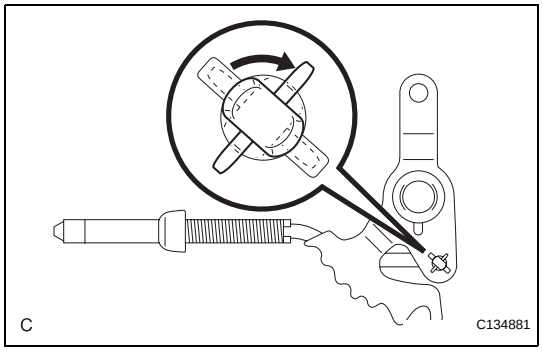

64. INSTALL MANUAL VALVE LEVER SUB-ASSEMBLY

(a) Install a new spacer and the manual valve lever shaft to the transaxle case.
NOTICE:
Do not damage the oil seal while installing the shaft to the transaxle case.

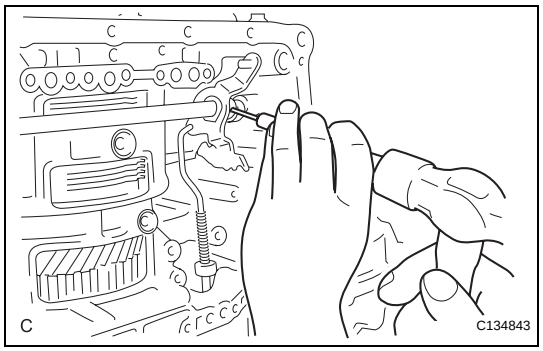

(b) Using a pin punch and hammer, drive in a new pin.

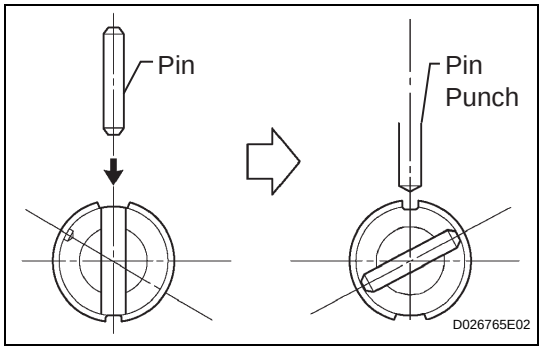

(c) Turn the spacer and the lever shaft to align the smaller hole of the spacer with the staking position mark on the lever shaft.

(d) Using a pin punch, stake the spacer through the small hole.

(e) Check that the spacer does not turn.

cardiagn.com

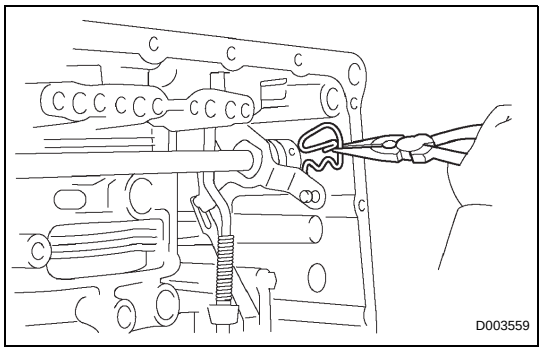

65. INSTALL MANUAL VALVE LEVER SHAFT RETAINER SPRING

(a) Using needle-nose pliers, install the retainer spring.
NOTICE:
Hang the spring on the shaft securely.

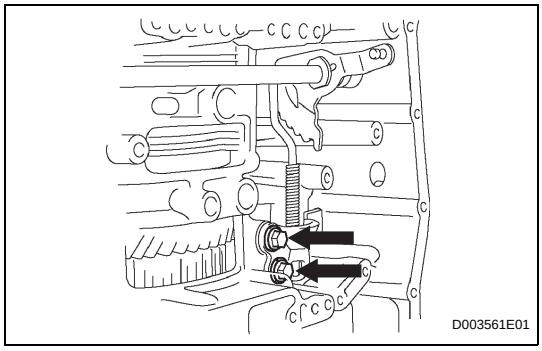

66. INSTALL PARKING LOCK PAWL BRACKET

(a) Install the parking lock pawl bracket with the 2 bolts.
Torque: 20 N*m (205 kgf*cm, 15 ft.*lbf)
Bolt length:
25 mm (0.98 in.)
NOTICE:
Be sure the parking rod is placed between the parking pawl and the guide of the parking bracket after the parking bracket is installed.

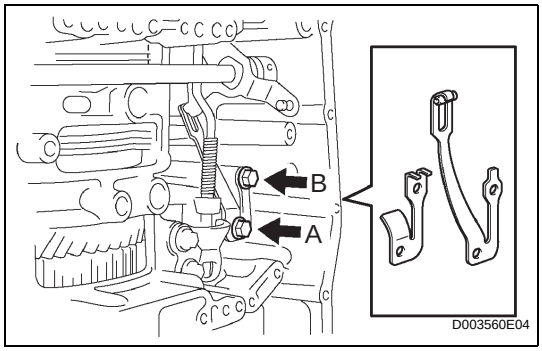

67. INSTALL MANUAL DETENT SPRING SUB-ASSEMBLY

(a) Install the manual detent spring sub-assembly with the 2 bolts.
NOTICE:
Make sure to install the manual detent spring and cover in this order.
HINT:
Tighten the bolts in the order of A and B.
Torque: Bolt A
20 N*m (205 kgf*cm, 15 ft.*lbf)
Bolt B
12 N*m (120 kgf*cm, 9 ft.*lbf)
Bolt length:
Bolt A:
27 mm (1.06 in.)
Bolt B:
16 mm (0.63 in.)

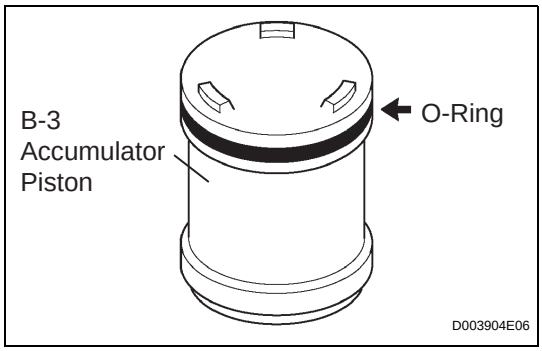

68. INSTALL B-3 ACCUMULATOR PISTON

(a) Coat a new O-ring with ATF, and install it to the B-3 accumulator piston.
NOTICE:
Install the O-ring to the accumulator piston not to have a twist or a pinching. Apply enough ATF to the O-ring prior to installation. Be sure about the installation position.

cardiagn.com

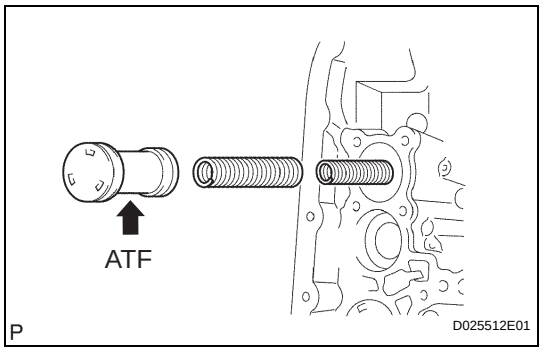

(b) Coat the piston and springs with ATF, and install them to the transaxle case.
NOTICE:
Install the correct springs to the B-3 accumulator piston by checking the color or dimension of the springs.
Accumulator spring:

Free length / Outer diameter (mm (in.))	Color
Inner: 62.00 (2.4409) / 15.50 (0.610)	Purple
Outer: 74.23 (2.9224) / 21.70 (0.854)	Purple

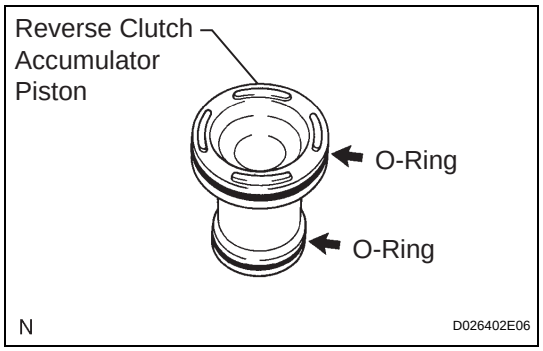

69. INSTALL REVERSE CLUTCH ACCUMULATOR PISTON

(a) Coat 2 new O-rings with ATF, and install them to the reverse clutch accumulator piston.
NOTICE:
Install the O-rings to the accumulator piston not to have a twist or a pinching. Apply enough ATF to the O-rings prior to installation. Be sure about the installation positions.

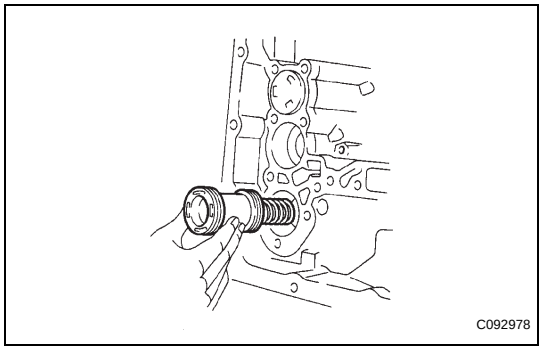

(b) Coat the piston and spring with ATF, and install them to the transaxle case.
NOTICE:
Install the correct spring to the reverse clutch accumulator piston by checking the color or dimension of the spring.
Accumulator spring:

Free length / Outer diameter (mm (in.))	Color
60.96 (2.3999) / 14.10 (0.555)	Yellow

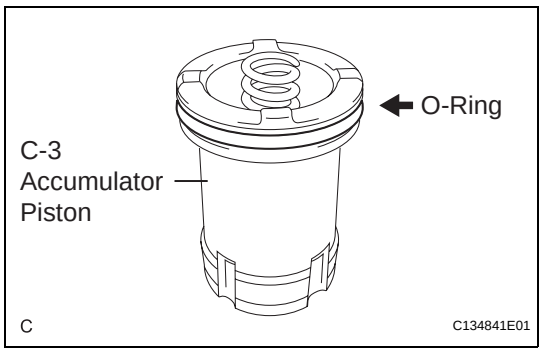

70. INSTALL C-3 ACCUMULATOR PISTON

(a) Coat a new O-ring with ATF, and install it to the C-3 accumulator piston.
NOTICE:
Install the O-ring to the accumulator piston not to have a twist or a pinching. Apply enough ATF to the O-ring prior to installation. Be sure about the installation position.

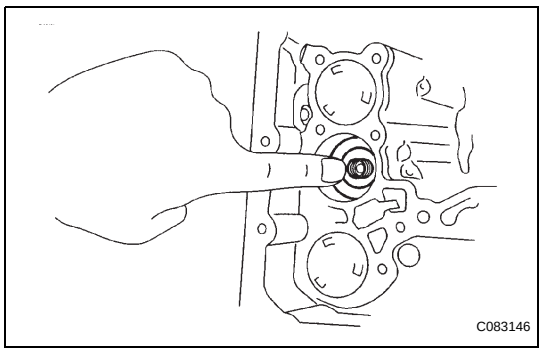

(b) Coat the piston with ATF, and install it to the transaxle case.

cardiagn.com

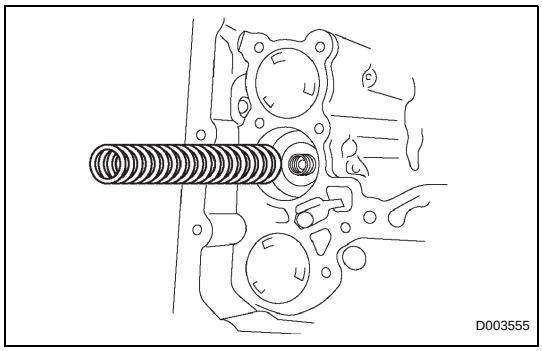

(c) Install the spring to the C-3 accumulator piston.
NOTICE:
Install the correct spring to the C-3 accumulator piston by checking the color or dimension of the spring.
Accumulator spring:

Free length / Outer diameter (mm (in.))	Color
72.20 (2.8425) / 19.0 (0.748)	Colorless

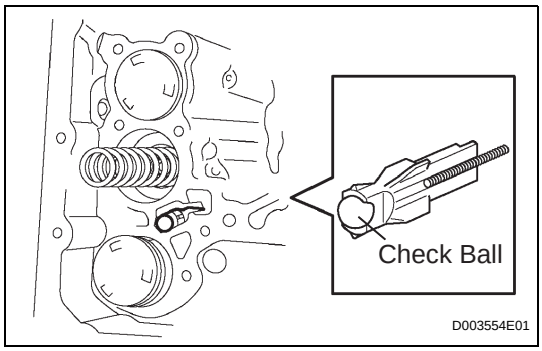

71. INSTALL CHECK BALL BODY
(a) Coat the check ball body with ATF.
(b) Install the check ball body and spring.
NOTICE:
Regarding the installation of the spring for the check ball body, be sure to place the spring in the hole in the ball body. Be careful about the orientation of the parts.

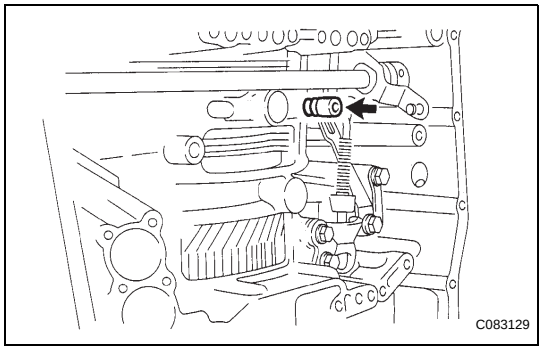

72. INSTALL BRAKE DRUM GASKET
(a) Coat a new brake drum gasket with ATF, and install it to the transaxle case.
NOTICE:
Do not damage the lip portion of the brake drum gasket when inserting the gasket to the case. Apply enough ATF to the gasket prior to installation. Be careful about the orientation of the parts.

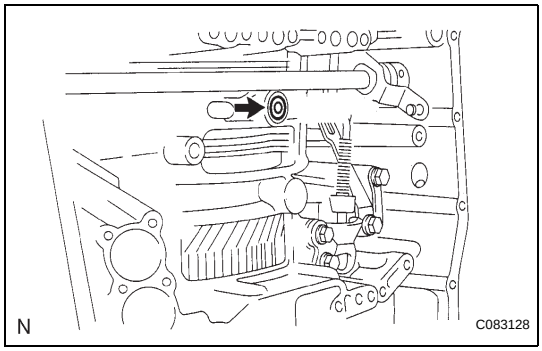

73. INSTALL TRANSAXLE CASE 2ND BRAKE GASKET
(a) Coat a new transaxle case 2nd brake gasket with ATF, and install it to the transaxle case.
NOTICE:
Do not damage the lip portion of the transaxle case 2nd brake gasket when inserting the gasket to the case. Apply enough ATF to the gasket prior to installation. Be careful about the orientation of the parts.

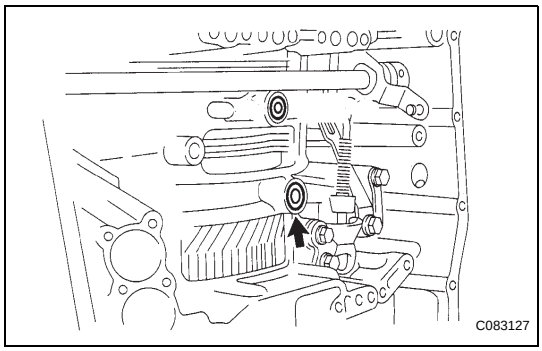

74. INSTALL NO. 1 GOVERNOR APPLY GASKET
(a) Coat a new No. 1 governor apply gasket with ATF, and install it to the transaxle case.
NOTICE:
Do not damage the lip portion of the No. 1 governor apply gasket when inserting the gasket to the case. Apply enough ATF to the gasket prior to installation. Be careful about the orientation of the parts.

cardiagn.com

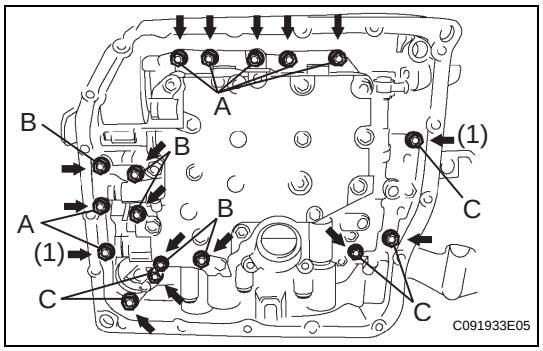

75. INSTALL TRANSMISSION VALVE BODY ASSEMBLY

(a) Check the manual valve lever position. Install the valve body to the transaxle case with the 17 bolts.
Torque: 11 N*m (110 kgf*cm, 8 ft.*lbf)
Bolt length:
Bolt A:
25 mm (0.984 in.)
Bolt B:
57 mm (2.244 in.)
Bolt C:
41 mm (1.614 in.)
NOTICE:
- **Push the valve body against the accumulator piston spring and the check ball body to install it.**
- **When installing the valve body to the transaxle case, do not hold the solenoids.**
- **Temporarily tighten the bolts marked by (1) in the illustration first because they are positioning bolts.**

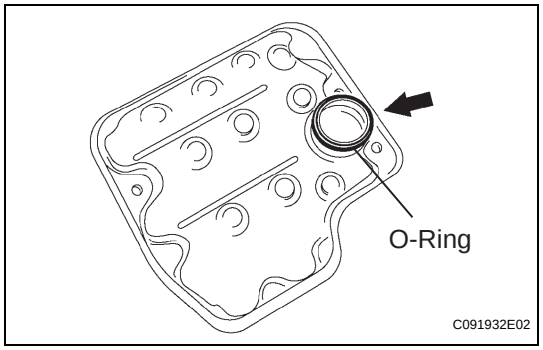

76. INSTALL VALVE BODY OIL STRAINER ASSEMBLY

(a) Coat a new O-ring with ATF, and install it to the oil strainer.
NOTICE:
Install the O-ring carefully not to have a twist or a pinching. Apply enough ATF to the O-ring prior to installation.

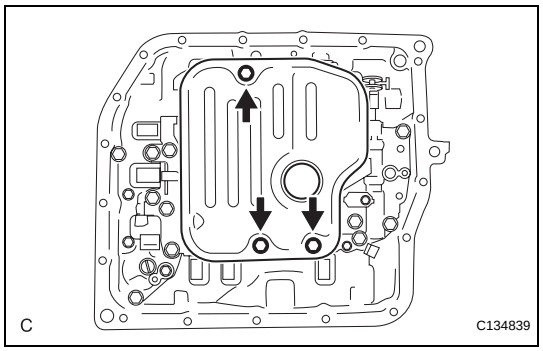

(b) Install the oil strainer to the valve body with the 3 bolts.
Torque: 11 N*m (110 kgf*cm, 8 ft.*lbf)
NOTICE:
Apply ATF to the bolts prior to installation.

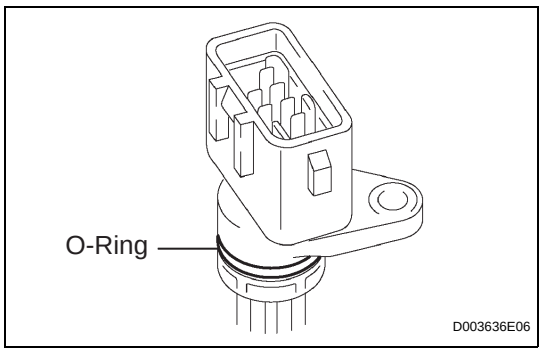

77. INSTALL TRANSMISSION WIRE

(a) Coat a new O-ring with ATF, and install it to the transmission wire.
NOTICE:
Install the O-ring not to have a twist or pinching. Apply enough ATF to the O-ring prior to installation.

cardiagn.com

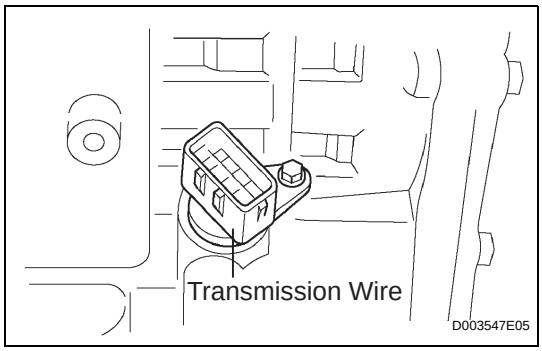

(b) Install the transmission wire retaining bolt.
Torque: 5.4 N*m (55 kgf*cm, 48 in.*lbf)

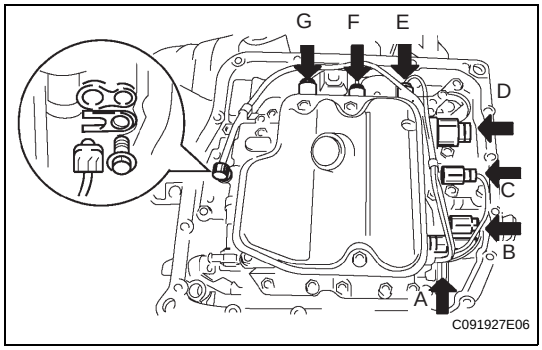

78. CONNECT TRANSMISSION WIRE

(a) Coat an O-ring of the ATF temperature sensor with ATF.

(b) Install the ATF temperature sensor with the lock plate and bolt.
Torque: 6.6 N*m (67 kgf*cm, 58 in.*lbf)

(c) Connect the 7 solenoid connectors.
NOTICE:
- **Connect the connectors to A, B, C, D, E, F and G, starting with the shorter ones.**
- **Apply ATF to the bolt prior to installation.**

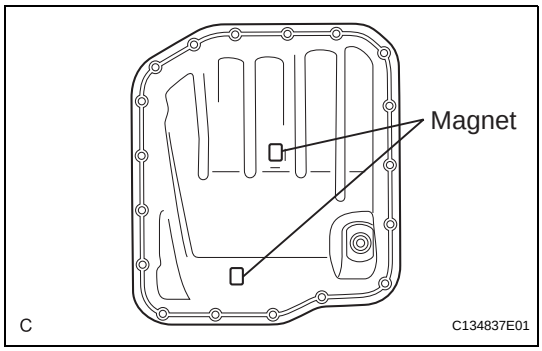

79. INSTALL AUTOMATIC TRANSAXLE OIL PAN SUB-ASSEMBLY

(a) Install the 2 magnets in the oil pan.

(b) Apply seal packing or equivalent to the 18 bolts.
Seal packing:
Toyota Genuine Seal Packing 1344, Three Bond 1344 or Equivalent

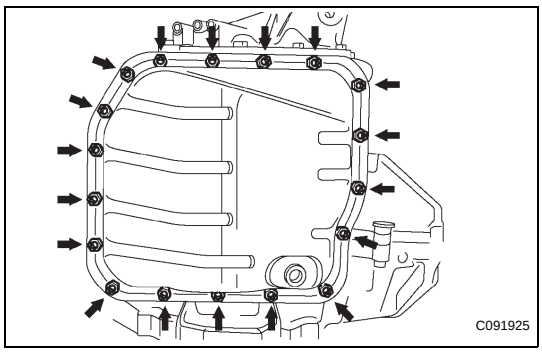

(c) Install a new oil pan gasket and the oil pan to the transaxle case with the 18 bolts.
Torque: 7.8 N*m (80 kgf*cm, 69 in.*lbf)
NOTICE:
- **Apply seal packing to new bolts and tighten them within 10 minutes of application.**
- **Remove any oil or grease from the contact surface of the transaxle case and the oil pan with the gasket completely before installing the oil pan to the case.**

(d) Install a new gasket to the drain plug.

(e) Install the drain plug.
Torque: 49 N*m (500 kgf*cm, 36 ft.*lbf)

cardiagn.com

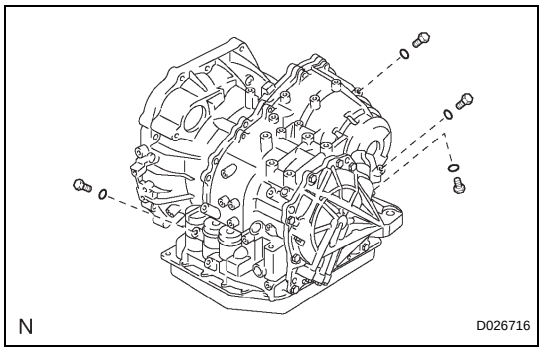

80. INSTALL NO. 1 TRANSAXLE CASE PLUG

(a) Coat 4 new O-rings with ATF, and install them to the 4 No. 1 transaxle case plugs.

(b) Install the 4 No. 1 transaxle case plugs to the transaxle case.
Torque: 7.4 N*m (75 kgf*cm, 65 in.*lbf)

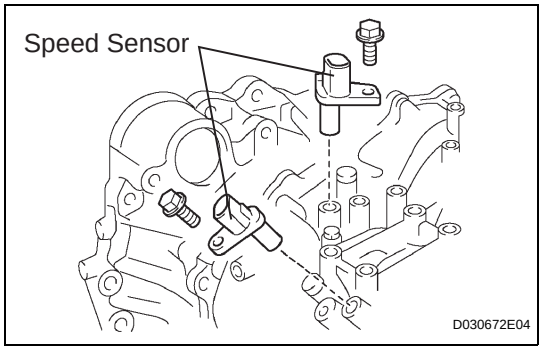

81. INSTALL SPEED SENSOR

(a) Apply liquid sealer to the "A" bolt threads.
Sealant:
Toyota Genuine Adhesive 1344, Three Bond 1344 or Equivalent

(b) Install the 2 sensors to the transaxle case with the 2 bolts.
Torque: 8.8 N*m (90 kgf*cm, 78 in.*lbf)

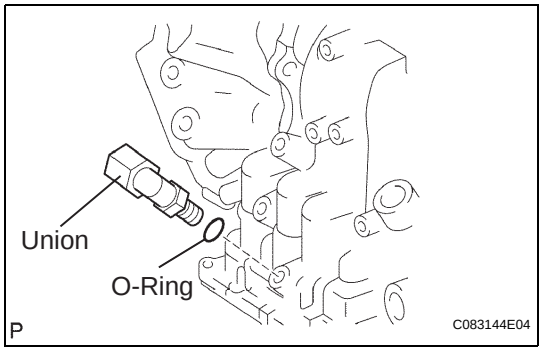

82. INSTALL OIL COOLER TUBE UNION (OUTLET OIL COOLER UNION)

(a) Coat a new O-ring with ATF, and install it to the union.

(b) Install the union to the transaxle case.
Torque: 27 N*m (276 kgf*cm, 20 ft.*lbf)

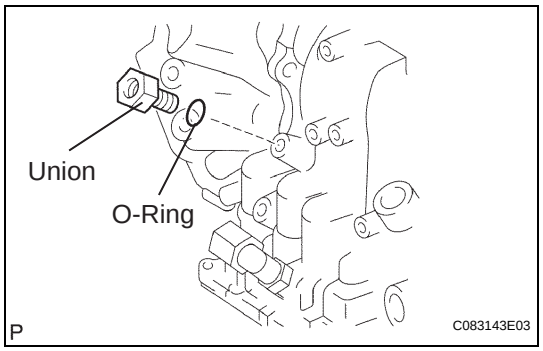

83. INSTALL OIL COOLER TUBE UNION (INLET OIL COOLER UNION)

(a) Coat a new O-ring with ATF, and install it to the union.

(b) Install the union to the transaxle case.
Torque: 25 N*m (255 kgf*cm, 18 ft.*lbf)

84. INSTALL NO. 2 BREATHER PLUG

(a) Coat a new O-ring with ATF.

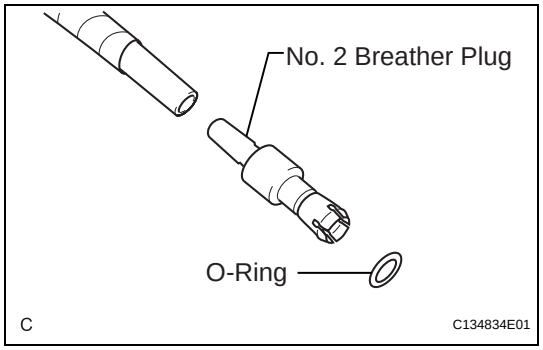

(b) Install the hose and a new O-ring to the breather plug.

(c) Install the No. 2 breather plug hose to the transaxle case.

cardiagn.com

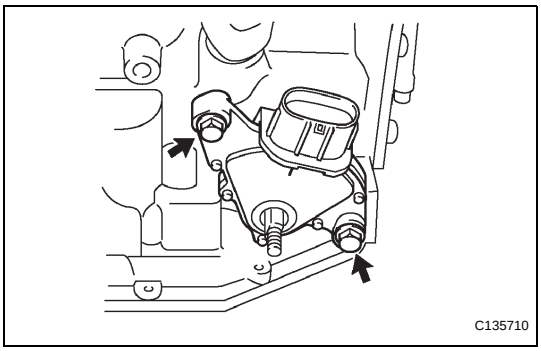

85. INSTALL PARK/NEUTRAL POSITION SWITCH ASSEMBLY

(a) Install the park/neutral position switch onto the manual valve lever shaft and temporarily install the 2 adjusting bolts.

(b) Install a new nut stopper and nut.
Torque: 6.9 N*m (70 kgf*cm, 61 in.*lbf)

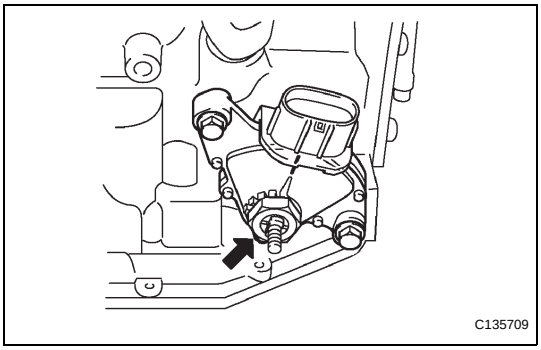

(c) Temporarily install the control shaft lever.

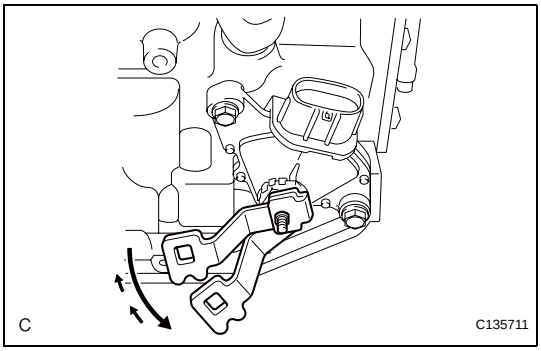

(d) Turn the lever counterclockwise until it stops, and then turn it clockwise 2 notches.

(e) Remove the control shaft lever.

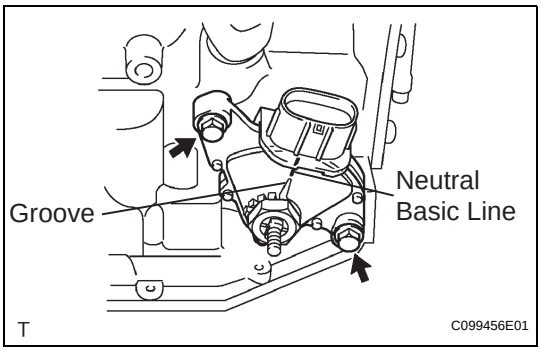

(f) Align the groove with the neutral basic line.

(g) Hold the switch in position and tighten the 2 bolts.
Torque: 5.4 N*m (55 kgf*cm, 48 in.*lbf)

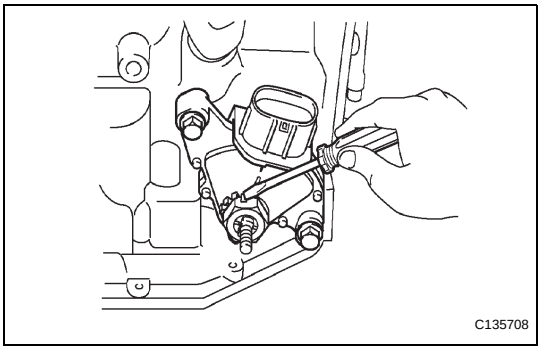

(h) Using a screwdriver, stake the nut with the nut stopper.

cardiagn.com

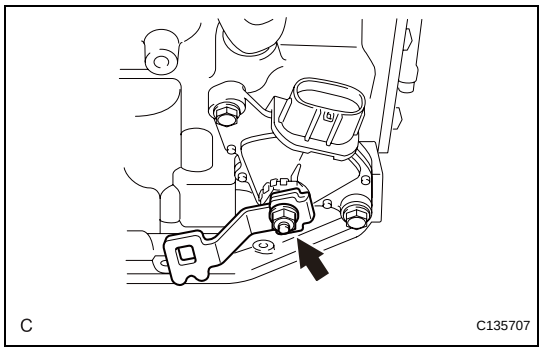

(i) Install the control shaft lever, washer and nut.
Torque: 13 N*m (130 kgf*cm, 9 ft.*lbf)

cardiagn.com

OIL PUMP

COMPONENTS

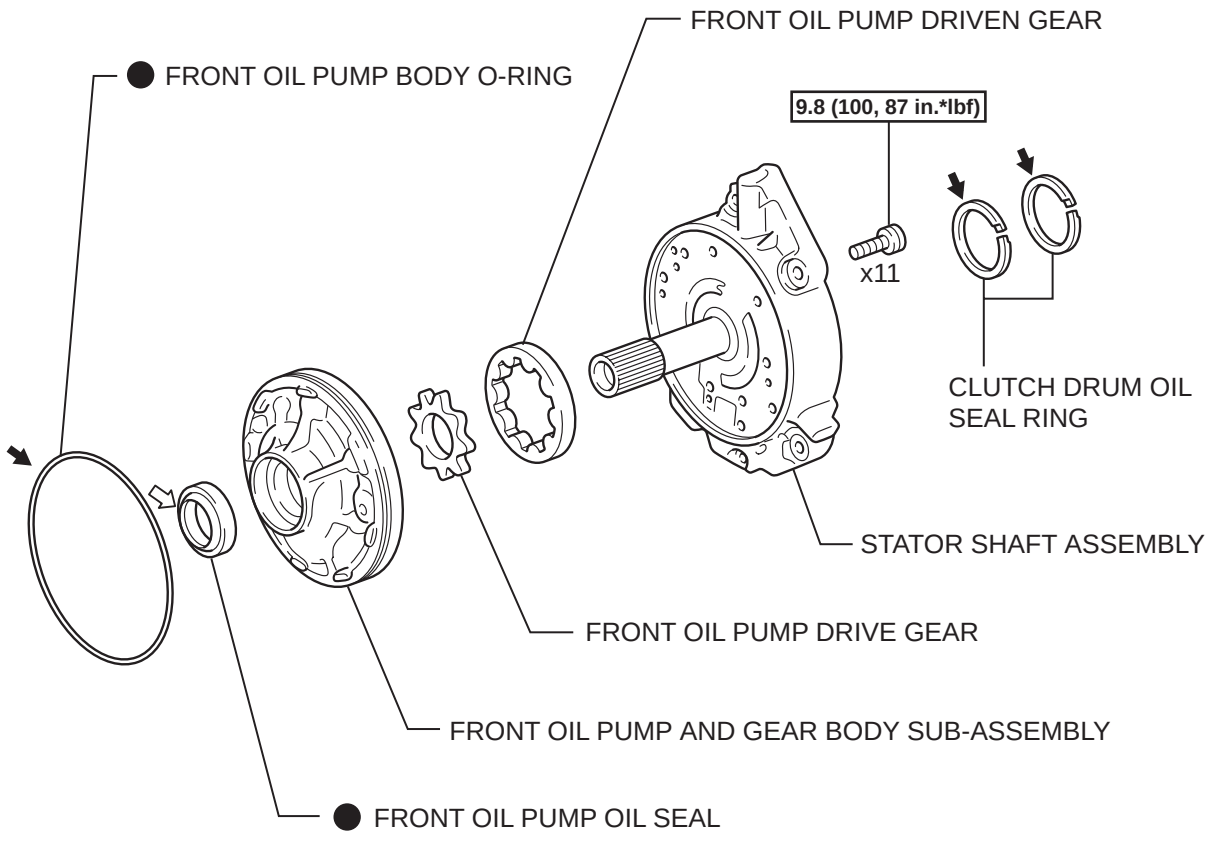

● Non-reusable part

⇦ Apply MP grease

🡄 Apply ATF WS

C132389E01

cardiagn.com

REMOVAL

1. **REMOVE OIL PUMP ASSEMBLY (See page AX-211)**

cardiagn.com

DISASSEMBLY

1. INSPECT OIL PUMP ASSEMBLY (See page AX-270)

2. REMOVE CLUTCH DRUM OIL SEAL RING

(a) Remove the 2 clutch drum oil seal rings.

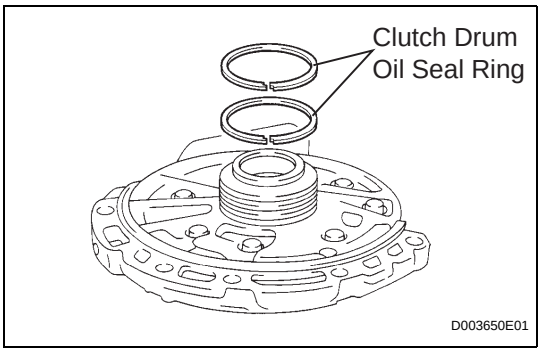

3. REMOVE STATOR SHAFT ASSEMBLY

(a) Using a torx socket (T30), remove the 11 bolts and stator shaft.

(b) Keep the gears in assembling order.

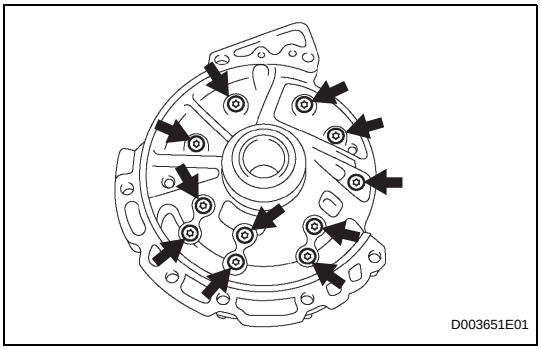

4. INSPECT CLEARANCE OF OIL PUMP ASSEMBLY (See page AX-270)

5. REMOVE FRONT OIL PUMP DRIVE GEAR

(a) Remove the front oil pump drive gear.

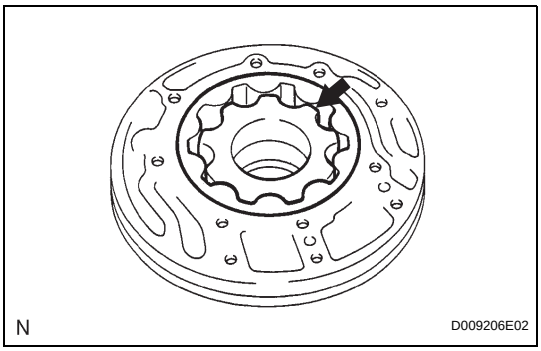

6. REMOVE FRONT OIL PUMP DRIVEN GEAR

(a) Remove the front oil pump driven gear.

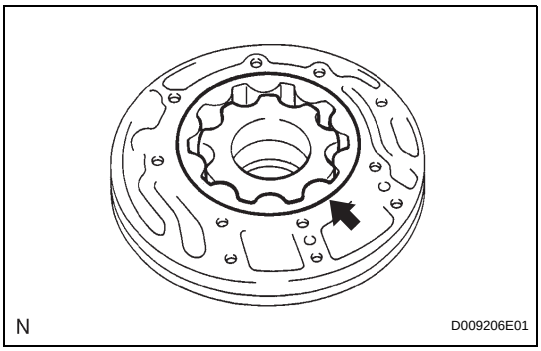

cardiagn.com

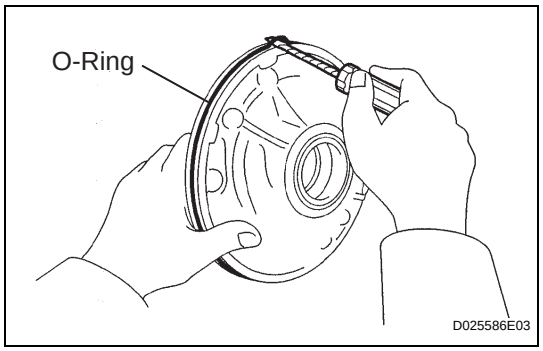

7. REMOVE FRONT OIL PUMP BODY O-RING

(a) Using a screwdriver, remove the O-ring.
HINT:
Tape the screwdriver tip before use.

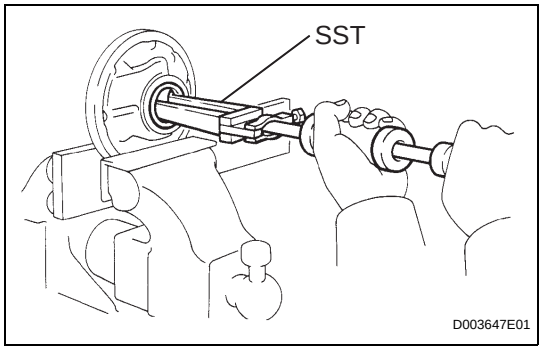

8. REMOVE FRONT OIL PUMP OIL SEAL

(a) Mount the oil pump in a soft jaw vise.
(b) Using SST, remove the oil seal from the oil pump body.
SST 09308-00010

INSPECTION

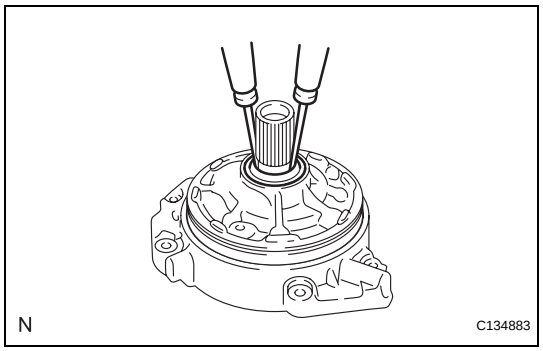

1. INSPECT OIL PUMP ASSEMBLY

(a) Turn the drive gear with 2 screwdrivers and make sure that it rotates smoothly.
NOTICE:
Be careful not to damage the oil seal lip.

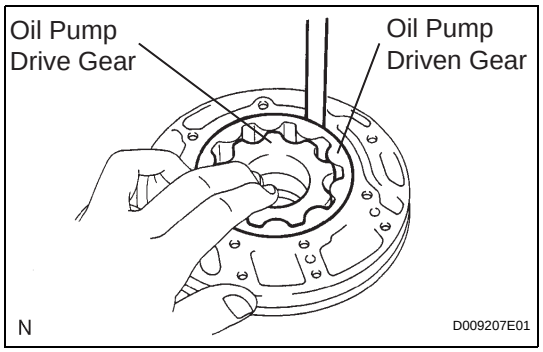

2. INSPECT CLEARANCE OF OIL PUMP ASSEMBLY

(a) Push the driven gear to one side of the body.
(b) Using a feeler gauge, measure the clearance.
Standard body clearance:
0.10 to 0.17 mm (0.0039 to 0.0067 in.)
Side clearance:
0.02 to 0.05 mm (0.001 to 0.002 in.)
Maximum body clearance:
0.17 mm (0.0067 in.)
If the body clearance is greater than the maximum, replace the oil pump body sub-assembly.

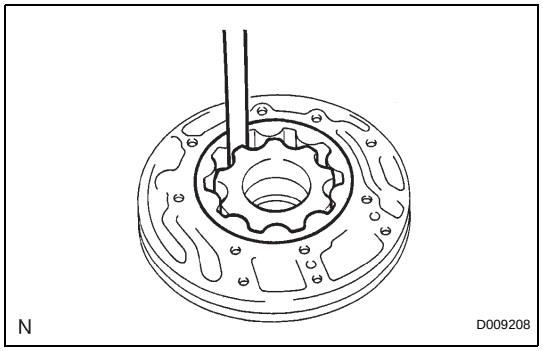

(c) Using a feeler gauge, measure the tip clearance between the driven gear teeth and drive gear teeth.
Standard tip clearance:
0.07 to 0.15 mm (0.0028 to 0.0059 in.)
Maximum tip clearance:
0.15 mm (0.0059 in.)
If the tip clearance is greater than the maximum, replace the oil pump body sub-assembly.

cardiagn.com

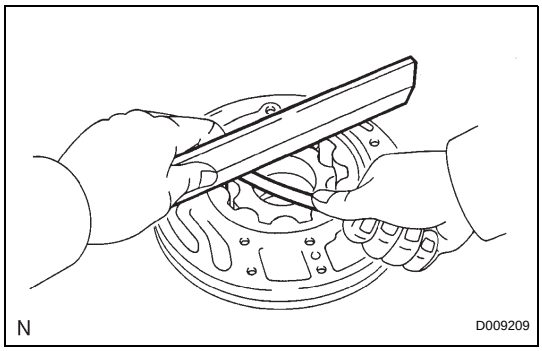

(d) Using a straight edge and feeler gauge, measure the side clearance of both gears.
Standard side clearance:
0.02 to 0.05 mm (0.0008 to 0.0020 in.)
Maximum side clearance:
0.05 mm (0.0020 in.)
Drive gear thickness: mm (in.)

Mark	Thickness
A	11.690 to 11.699 (0.4602 to 0.4606)
B	11.700 to 11.709 (0.4606 to 0.4610)
C	11.710 to 11.720 (0.4610 to 0.4614)
D	11.721 to 11.730 (0.4615 to 0.4618)
E	11.731 to 11.740 (0.4619 to 0.4622)

Driven gear thickness: mm (in.)

Mark	Thickness
A	11.690 to 11.699 (0.4602 to 0.4606)
B	11.700 to 11.709 (0.4606 to 0.4610)
C	11.710 to 11.720 (0.4610 to 0.4614)
D	11.721 to 11.730 (0.4615 to 0.4618)
E	11.731 to 11.740 (0.4619 to 0.4622)

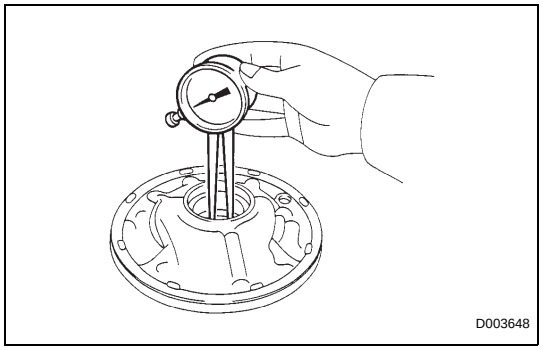

3. INSPECT FRONT OIL PUMP AND GEAR BODY SUB-ASSEMBLY

(a) Using a dial indicator, measure the inside diameter of the oil pump body bushing.
Standard inside diameter:
38.113 to 38.138 mm (1.50051 to 1.50149 in.)
Maximum inside diameter:
38.188 mm (1.50346 in.)
If the inside diameter is greater than the maximum, replace the oil pump body sub-assembly.

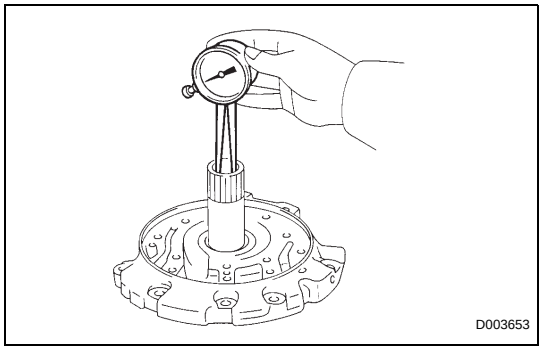

4. INSPECT STATOR SHAFT ASSEMBLY

(a) Using a dial indicator, measure the inside diameter of the stator shaft.
Standard inside diameter:
21.500 to 21.526 mm (0.84646 to 0.84748 in.)
Maximum inside diameter:
21.57 mm (0.8492 in.)
If the inside diameter is greater than the maximum, replace the stator shaft.

REASSEMBLY

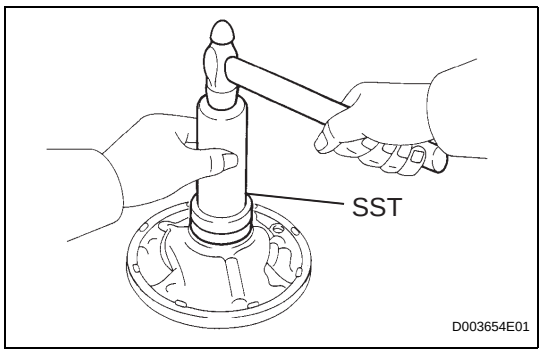

1. INSTALL FRONT OIL PUMP OIL SEAL

(a) Using SST and a hammer, install a new oil seal to the oil pump body.
SST 09350-32014 (09351-32140)
HINT:
The seal end should be flush with the outer edge of the oil pump.

(b) Coat the lip of the oil seal with MP grease.

cardiagn.com

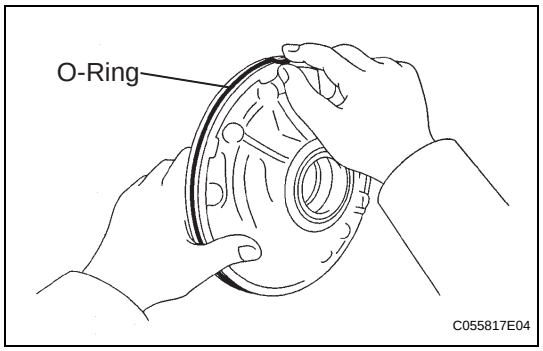

2. INSTALL FRONT OIL PUMP BODY O-RING

(a) Coat a new O-ring with ATF, and install it to the oil pump body.

NOTICE:

- **Install the O-ring carefully not to have a twist or a pinching.**
- **Apply enough ATF to the O-ring prior to installation.**

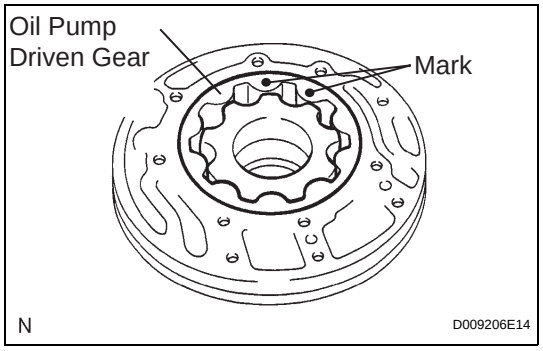

3. INSTALL FRONT OIL PUMP DRIVEN GEAR

(a) Coat the front oil pump driven gear with ATF, and install it to the oil pump body with the marked side up.

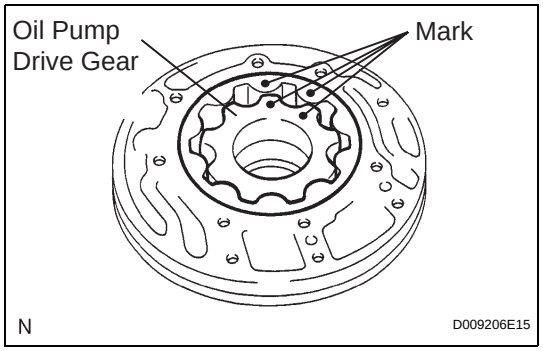

4. INSTALL FRONT OIL PUMP DRIVE GEAR

(a) Coat the front oil pump drive gear with ATF, and install it to the oil pump body with the marked side up.

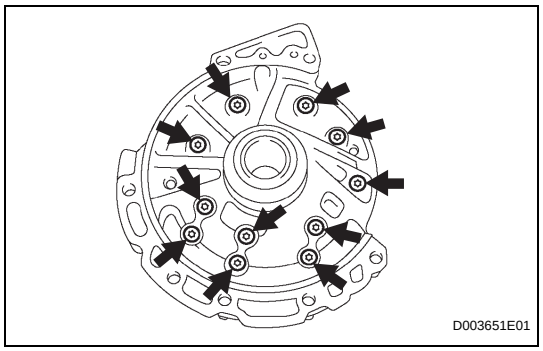

5. INSTALL STATOR SHAFT ASSEMBLY

(a) Align the bolt holes in the stator shaft assembly with those in the front oil pump and gear body sub-assembly.

(b) Using a torx socket (T30), install the 11 bolts.
Torque: 9.8 N*m (100 kgf*cm, 87 in.*lbf)

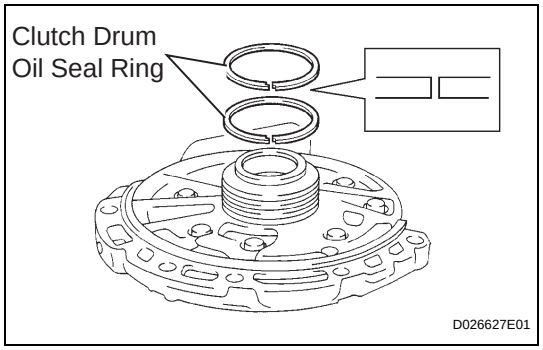

6. INSTALL CLUTCH DRUM OIL SEAL RING

(a) Coat 2 new clutch drum oil seal rings with ATF.

(b) Install the 2 clutch drum oil seal rings.
NOTICE:
Do not expand the ring ends excessively.

cardiagn.com

INSTALLATION

1. **INSTALL OIL PUMP ASSEMBLY (See page AX-257)**

cardiagn.com

FORWARD CLUTCH

COMPONENTS

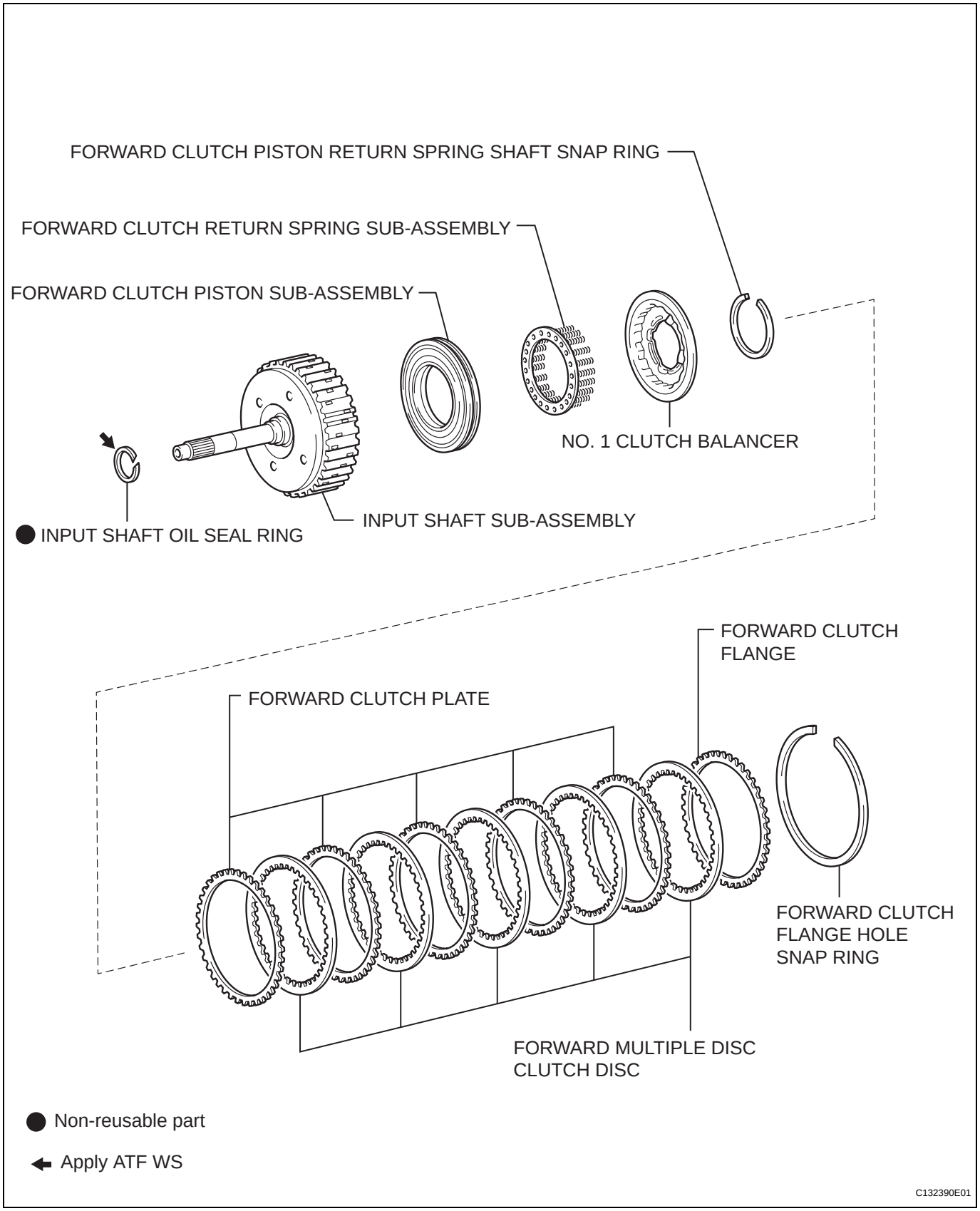

cardiagn.com

DISASSEMBLY

1. INSPECT PACK CLEARANCE OF FORWARD CLUTCH (See page AX-275)

2. REMOVE FORWARD MULTIPLE DISC CLUTCH DISC

(a) Using a screwdriver, remove the snap ring.

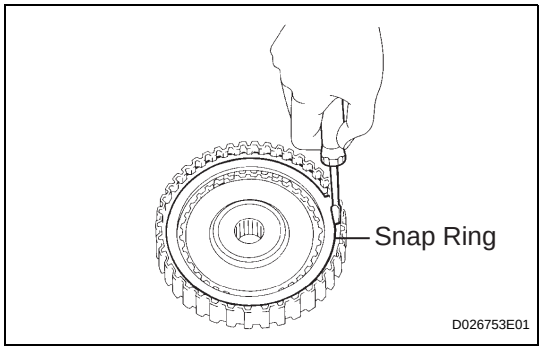

(b) Remove the flange, 5 discs and 5 plates from the input shaft assembly.

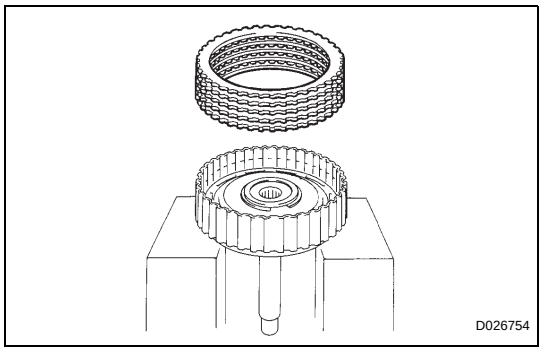

3. REMOVE FORWARD CLUTCH RETURN SPRING SUB-ASSEMBLY

(a) Place SST on the spring retainer and compress the return spring with a press.
SST 09387-00020

(b) Using a snap ring expander, remove the snap ring.
NOTICE:
- **Stop the press when the spring seat is lowered to the place 1 to 2 mm (0.039 to 0.078 in.) from the snap ring groove. This prevents the spring seat from bearing deformed.**
- **Do not expand the snap ring excessively.**

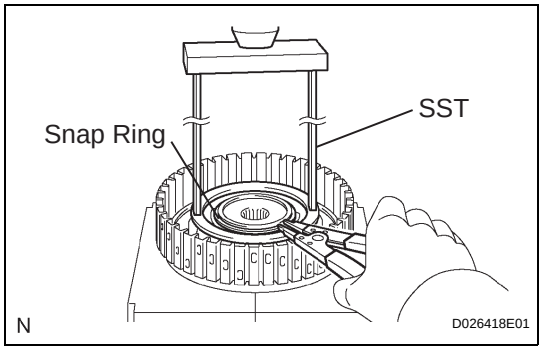

(c) Remove the clutch balancer from the input shaft.

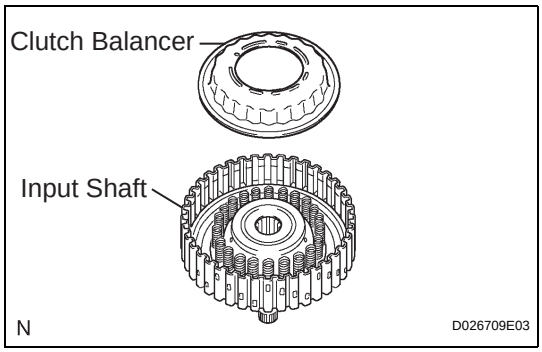

cardiagn.com

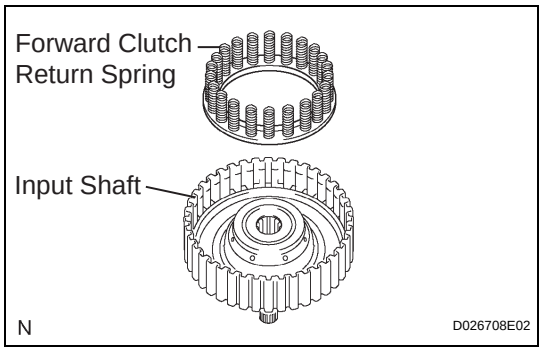

(d) Remove the forward clutch return spring from the input shaft.

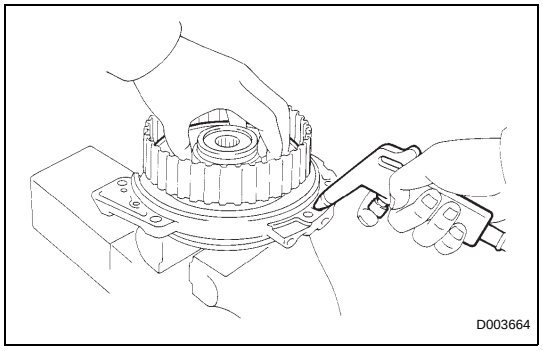

4. REMOVE FORWARD CLUTCH PISTON SUB-ASSEMBLY

(a) Place the forward clutch drum onto the oil pump.

(b) Holding the forward clutch piston by hand, apply compressed air (392 kPa, 4.0 kgf/cm^2, 57 psi) to the oil pump to remove the forward clutch piston.
HINT:
When the piston cannot be removed as it is slanted, either blow the air again with the protruding side pushed, or remove the piston using needle nose pliers with the tips taped.

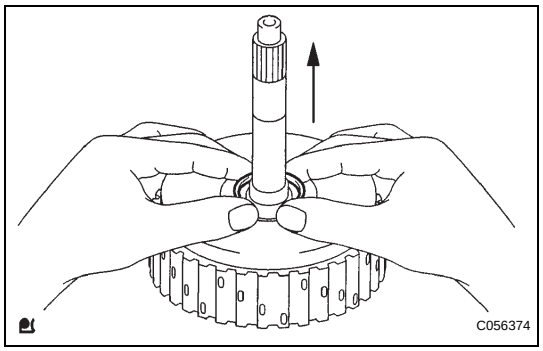

5. REMOVE INPUT SHAFT OIL SEAL RING

(a) Remove the input shaft oil seal ring from the input shaft.

INSPECTION

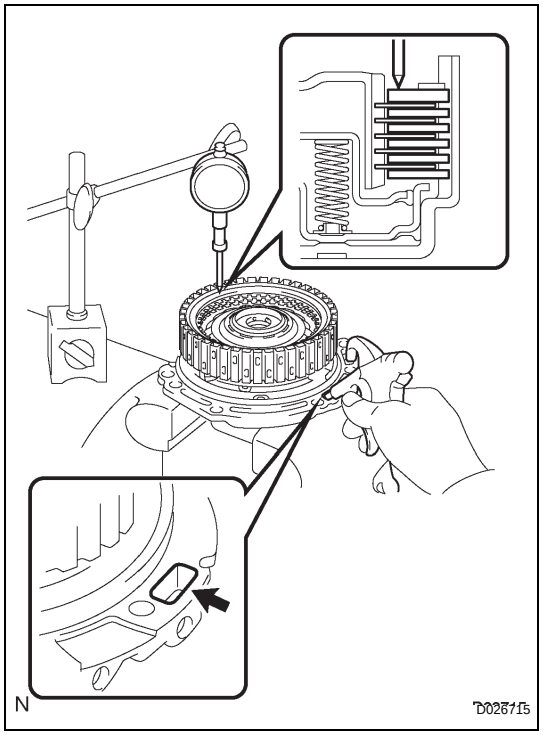

1. INSPECT PACK CLEARANCE OF FORWARD CLUTCH

(a) Install the forward clutch on the oil pump.
NOTICE:
Be careful not to damage the oil seal ring of the oil pump.

(b) Using a dial indicator, measure the forward clutch pack clearance while applying and releasing compressed air (392 kPa, 4.0 kgf/cm^2, 57 psi).
Pack clearance:
1.00 to 1.25 mm (0.0394 to 0.04921 in.)
If the clearance is not within the standard, inspect the discs, plates and flange.
If the piston stroke is less than the minimum, parts may have been assembled incorrectly. Check and reassemble again.
HINT:
- As the opening is large, cover it with a piece of cloth or shop rag to prevent the compressed air from being released.

cardiagn.com

- There are 5 different thicknesses of flanges available.

Flange thickness: mm (in.)

No.	Thickness	No.	Thickness
1	3.00 (0.1181)	4	3.45 (0.1358)
2	3.15 (0.1240)	5	3.60 (0.1417)
3	3.30 (0.1299)	-	-

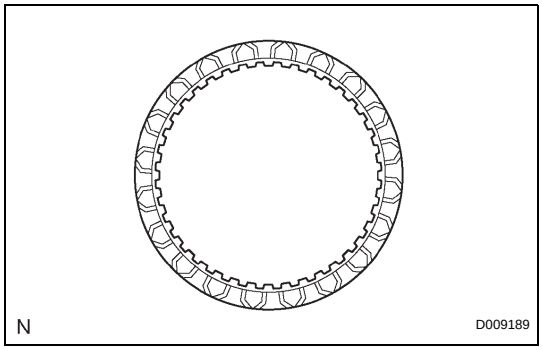

2. INSPECT FORWARD MULTIPLE DISC CLUTCH DISC

(a) Check if the sliding surfaces of the discs, plates, and flange are worn or burnt.
If necessary, replace them.
HINT:
- If the lining of a disc comes off or discolors, or even if a part of the groove is damaged, replace all discs.
- Before assembling new discs, soak them in ATF for at least 15 minutes.

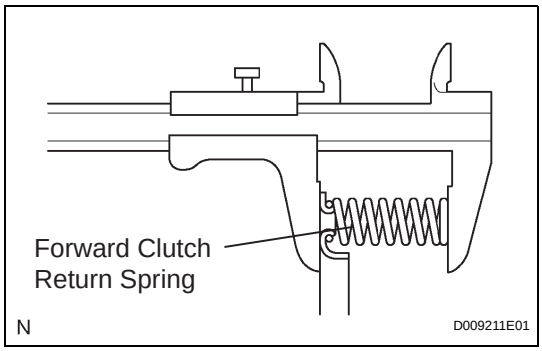

3. INSPECT FORWARD CLUTCH RETURN SPRING SUB-ASSEMBLY

(a) Using vernier calipers, measure the free length of the spring together with the spring seat.
Standard free length:
26.74 mm (1.0528 in.)
If the free length is shorter than the standard free length, replace the forward clutch return spring sub-assembly.

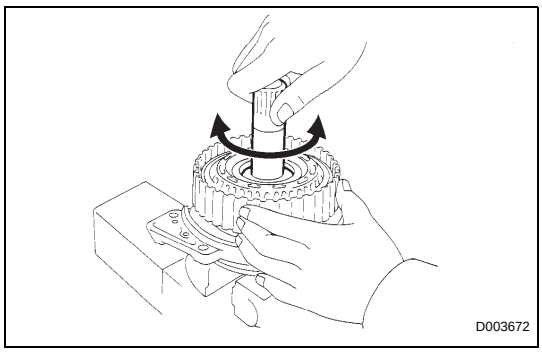

4. INSPECT FORWARD MULTIPLE DISC CLUTCH DISC

(a) Check if the disc lightly rotates when rotating the forward clutch assembly after inserting the multiple disc clutch into it.
NOTICE:
Do not place the forward clutch assembly in a vise.

REASSEMBLY

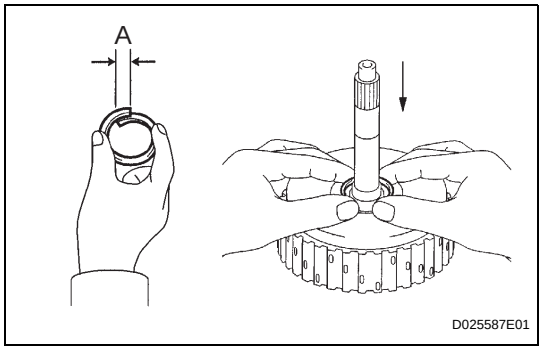

1. INSTALL INPUT SHAFT OIL SEAL RING

(a) Compress a new input shaft oil seal ring from both sides to adjust dimension A.
Dimension A:
5 mm (0.197 in.)

(b) Coat the oil seal ring with ATF and install it to the input shaft.
NOTICE:
Do not expand the gap of the oil seal ring too much. Securely engage the hooks.

cardiagn.com

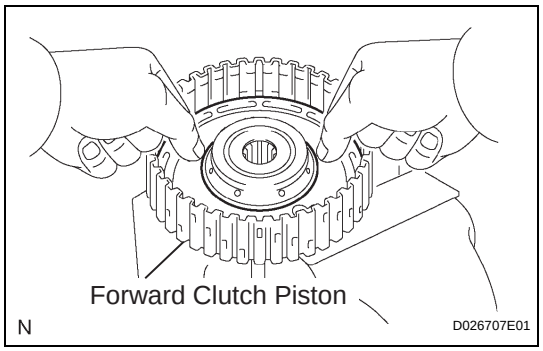

2. INSTALL FORWARD CLUTCH PISTON SUB-ASSEMBLY

(a) Coat the forward clutch piston with ATF, and install it to the input shaft.
NOTICE:
Be careful not to damage the lip seal of the forward clutch piston.

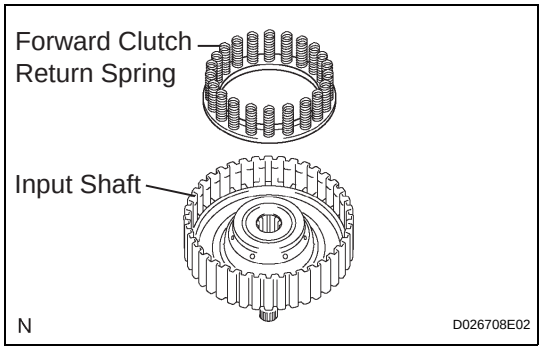

3. INSTALL FORWARD CLUTCH RETURN SPRING SUB-ASSEMBLY

(a) Install the return spring to the input shaft.
NOTICE:
After installing the spring sub-assembly, check all of the springs are fitted in the piston correctly.

(b) Coat the clutch balancer with ATF.

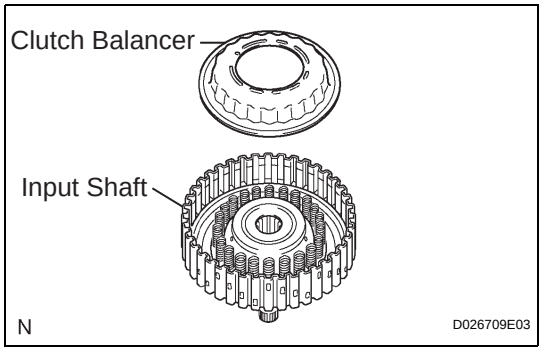

(c) Install the clutch balancer to the input shaft.
NOTICE:
- **Be careful not to damage the lip seal of the forward clutch balancer.**
- **Install the clutch balancer carefully not to have a pinching or any other defects at the sealing lip.**
- **Apply enough ATF to the sealing lip prior to installation.**

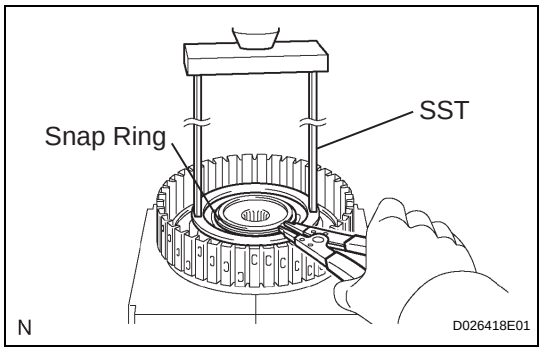

(d) Place SST on the clutch balancer, and compress the clutch balancer with a press.
SST 09387-00020

(e) Install the snap ring with a snap ring expander.
NOTICE:
- **Stop the press when the spring seat is lowered to the place 1 to 2 mm (0.039 to 0.078 in.) from the snap ring groove. This prevents the spring seat from being deformed.**
- **Do not expand the snap ring excessively.**

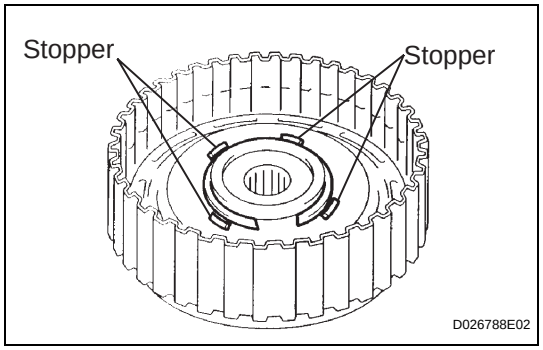

(f) Position the end gap of the snap ring in the piston as shown in the illustration.
NOTICE:
The end gap of the snap ring should not be aligned with any of the stoppers.

4. INSTALL FORWARD MULTIPLE DISC CLUTCH DISC

(a) Coat the 5 discs with ATF.

cardiagn.com

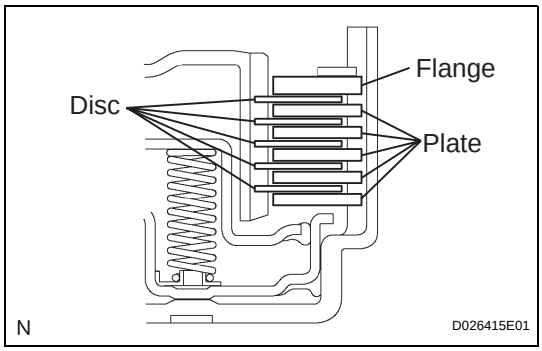

(b) Install the 5 plates, 5 discs, and flange to the input shaft.
NOTICE:
Be careful about the order of discs, plates, and flange.

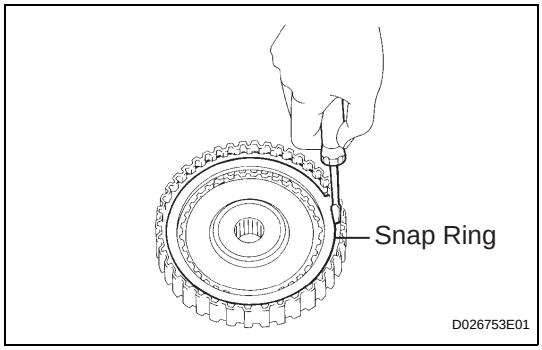

(c) Using a screwdriver, install the snap ring.
(d) Check that the end gap of the snap ring is not aligned with one of the cutouts.
NOTICE:
The snap ring should be securely engaged in the groove of the drum.

5. INSPECT PACK CLEARANCE OF FORWARD CLUTCH (See page AX-275)

6. INSPECT FORWARD MULTIPLE CLUTCH DISC (See page AX-276)

cardiagn.com

UNDERDRIVE PLANETARY GEAR

COMPONENTS

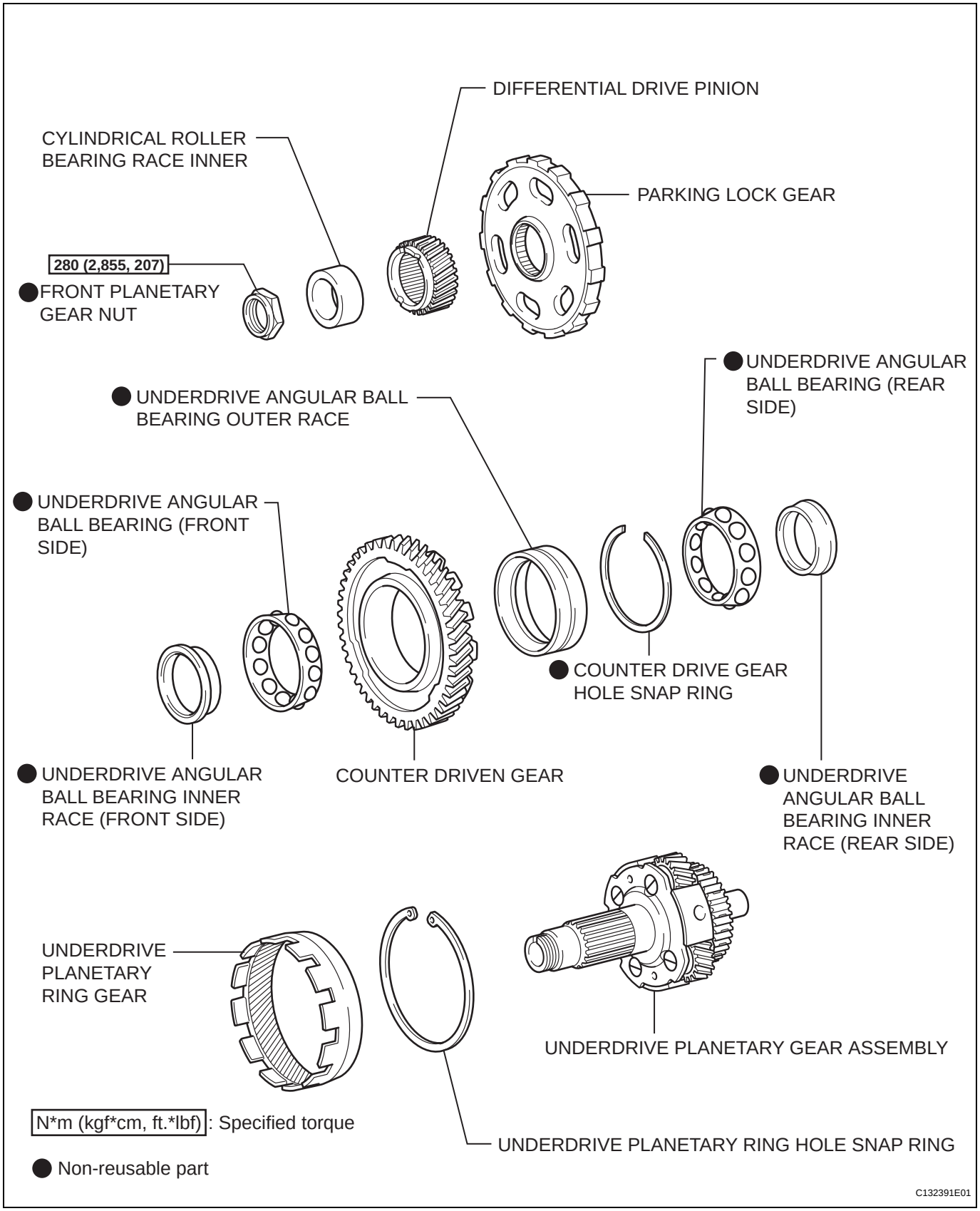

cardiagn.com

DISASSEMBLY

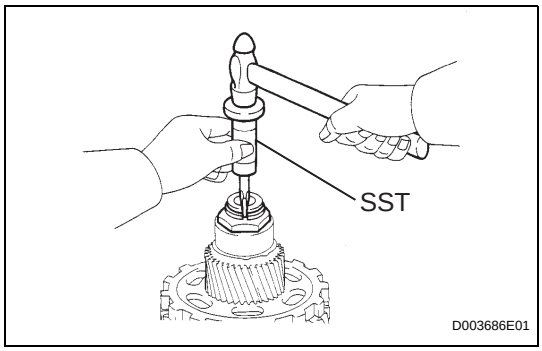

1. REMOVE FRONT PLANETARY GEAR NUT

(a) Using SST and a hammer, loosen the staked part of the lock nut.

SST 09930-00010 (09931-00010, 09931-00020), 09387-00050, 09495-65040

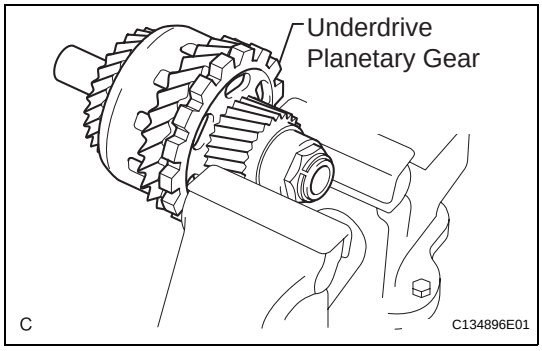

(b) Clamp the underdrive planetary gear in a soft jaw vise.

NOTICE:
Be careful not to damage the differential drive pinion.

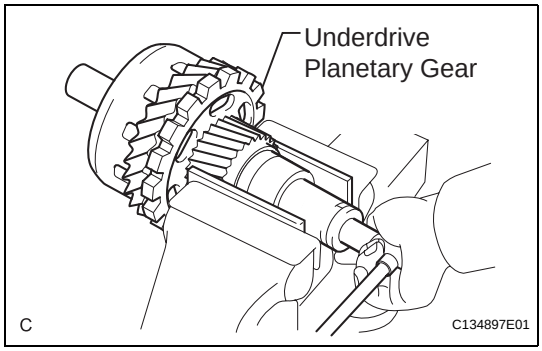

(c) Using a socket wrench, remove the lock nut.

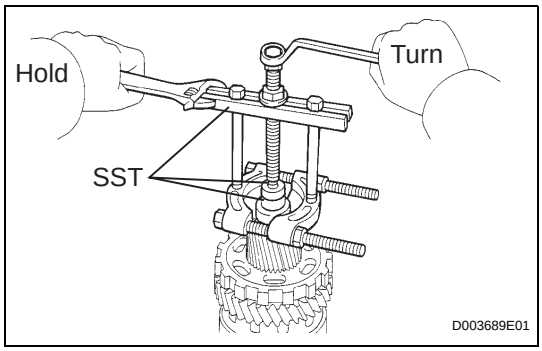

2. REMOVE CYLINDRICAL ROLLER BEARING RACE INNER

(a) Using SST, remove the cylindrical roller bearing race inner.

SST 09950-00020, 09950-00030, 09950-40011 (09957-04010), 09950-60010 (09951-00320)

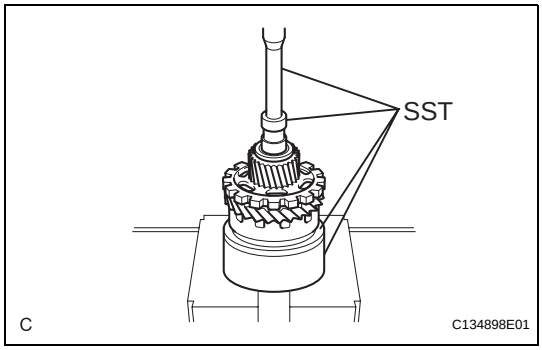

3. REMOVE UNDERDRIVE PLANETARY GEAR ASSEMBLY

(a) Using SST and a press, remove the differential drive pinion, parking lock gear, counter driven gear with underdrive planetary ring gear, and angular ball bearing.

SST 09387-00050, 09495-65040, 09950-60010 (09951-00320), 09950-70010 (09951-07100)

cardiagn.com

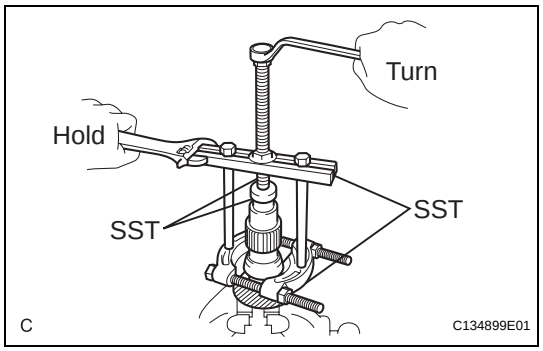

(b) Clamp the underdrive planetary gear in a soft jaw vise.

(c) Using SST, remove the rear angular ball bearing from the underdrive planetary gear.
SST 09950-00020, 09950-00030, 09950-40011 (09957-04010), 09950-60010 (09951-00320)

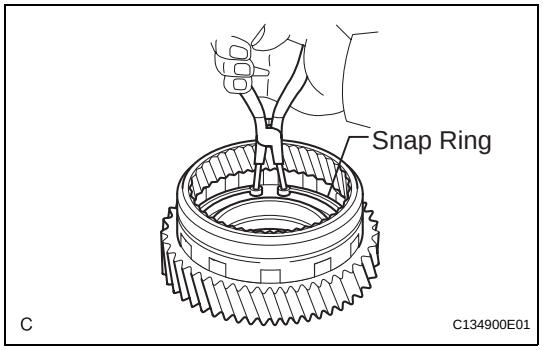

4. REMOVE UNDERDRIVE PLANETARY RING GEAR

(a) Using snap ring pliers, remove the snap ring.

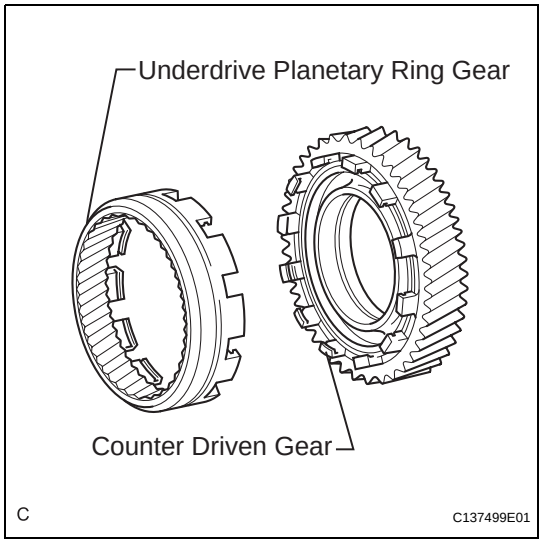

(b) Remove the underdrive planetary ring gear from the counter driven gear.

INSPECTION

1. INSPECT UNDERDRIVE PLANETARY GEAR PRELOAD

(a) Using SST, fix the underdrive planetary gear assembly.
SST 09387-00050, 09495-65040

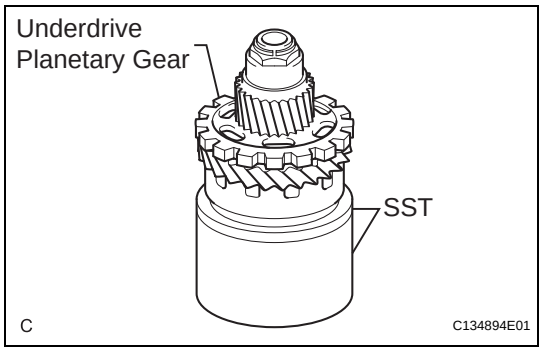

cardiagn.com

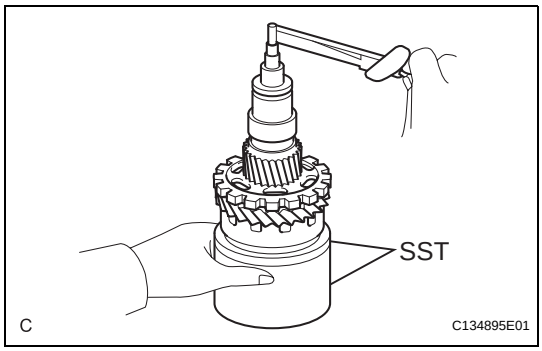

(b) Using SST and a torque wrench, measure the turning torque of the underdrive planetary gear assembly while turning the torque wrench at 60 rpm.
SST 09387-00050, 09495-65040
Turning torque at 60 rpm:
0.28 to 0.89 N*m (2.9 to 9.1 kgf*cm, 2.478 to 7.877 in.*lbf)
HINT:
Use a torque wrench with a fulcrum length of 160 mm (6.3 in.).

REASSEMBLY

1. INSTALL UNDERDRIVE PLANETARY RING GEAR

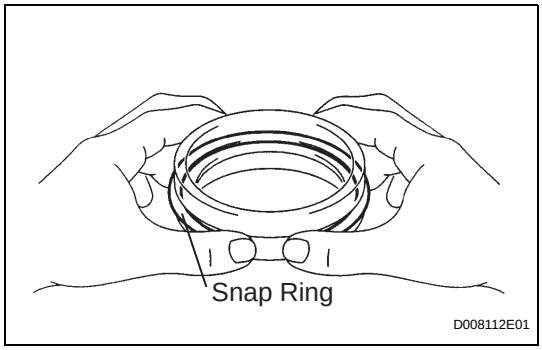

(a) Install a new snap ring to the outer race of the tapered roller bearing.
HINT:
If replacing the bearing, also replace the counter driven gear with a new one.

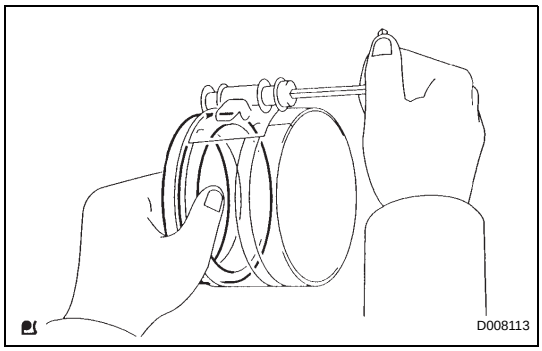

(b) Using a piston ring compressor, squeeze the snap ring.

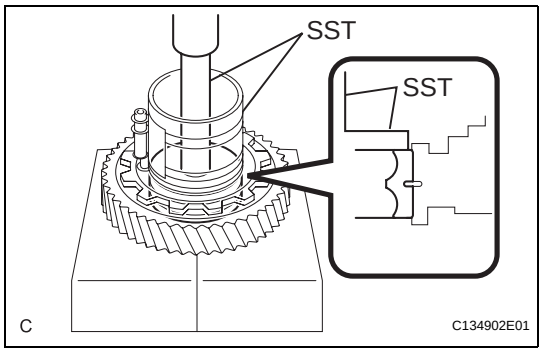

(c) Using SST and a press, press in the outer race of the angular ball bearing.
SST 09950-60020 (09951-00890), 09950-70010 (09951-07100)
NOTICE:
Do not damage the snap ring during installation of the outer race.

cardiagn.com

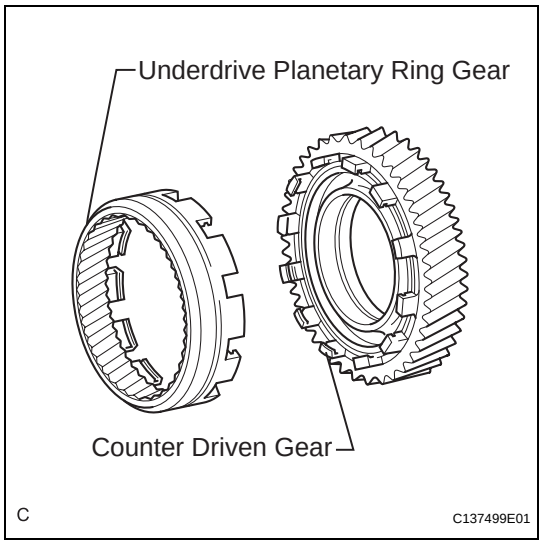

(d) Install the underdrive planetary ring gear to the counter driven gear.

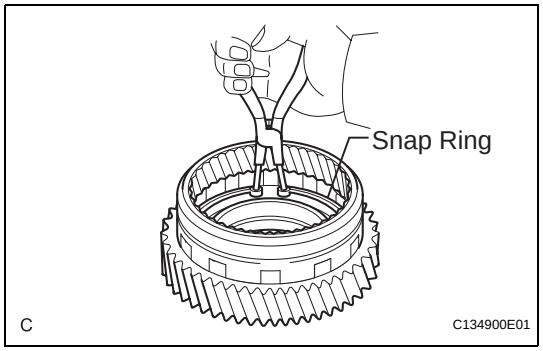

(e) Using snap ring pliers, install the snap ring.

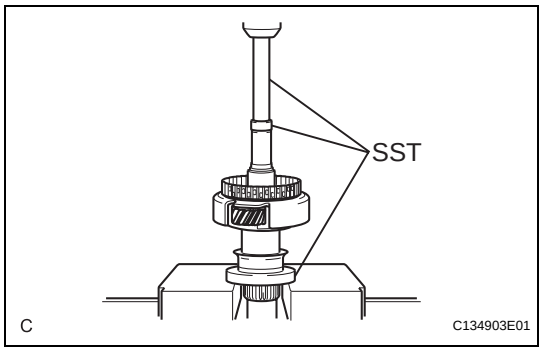

2. INSTALL UNDERDRIVE PLANETARY GEAR ASSEMBLY

(a) Using a press, press the angular ball bearing inner race (rear side) into the underdrive planetary gear.
SST 09950-60010 (09951-00260), 09950-70010 (09951-07100), 09726-40010

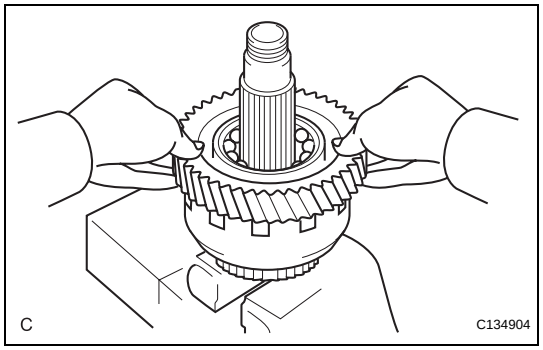

(b) Install the counter driven gear with planetary ring gear to the underdrive planetary gear.

cardiagn.com

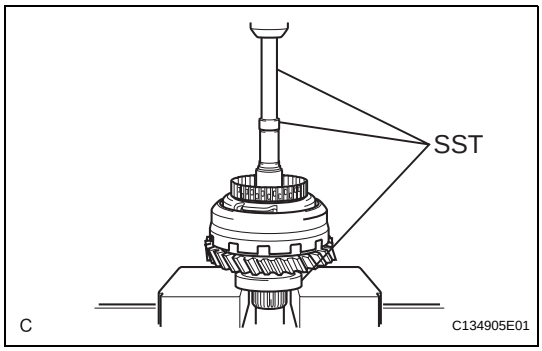

(c) Using SST and a press, press in the angular ball bearing inner race (front side).
SST 09950-60010 (09951-00260), 09950-70010 (09951-07100), 09726-40010
NOTICE:
Press the counter driven gear while rotating it.

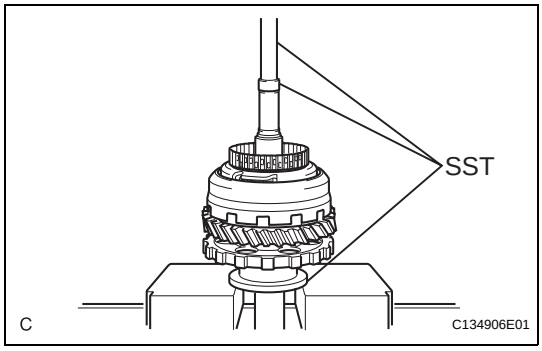

(d) Using a press, press in the parking lock gear.
SST 09950-60010 (09951-00260), 09950-70010 (09951-07100), 09316-20011
NOTICE:
Press the counter driven gear while rotating it.

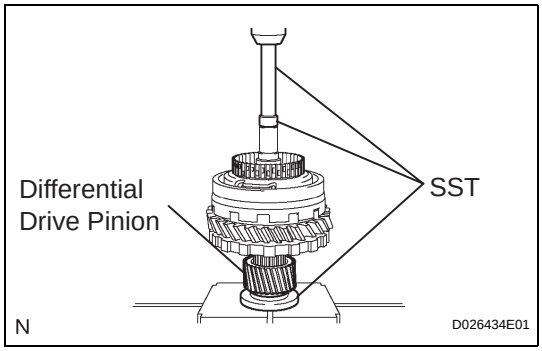

3. INSTALL DIFFERENTIAL DRIVE PINION

(a) Using a press, press in the differential drive pinion.
SST 09726-40010, 09950-60010 (09951-00260), 09950-70010 (09951-07100)
NOTICE:
Press the counter driven gear while rotating it.

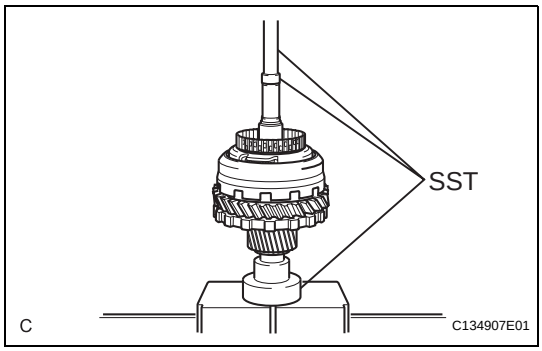

4. INSTALL CYLINDRICAL ROLLER BEARING RACE INNER

(a) Using a press, press in the cylindrical roller bearing race inner.
SST 09515-21010, 09950-60010 (09951-00260), 09950-70010 (09951-07100)
NOTICE:
Press the counter driven gear while rotating it.

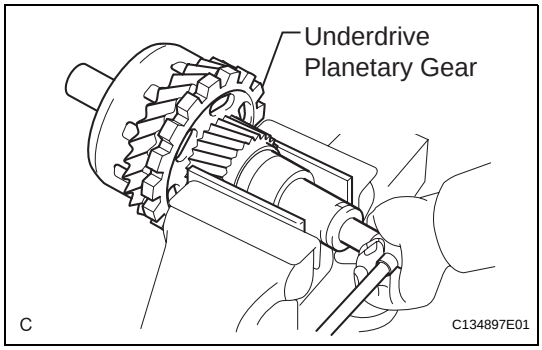

5. INSTALL FRONT PLANETARY GEAR NUT

(a) Clamp the underdrive planetary gear in a soft jaw vise.
NOTICE:
Be careful not to damage the differential drive pinion.

(b) Using a socket wrench, install a new lock nut.
Torque: 280 N*m (2,855 kgf*cm, 207 ft.*lbf)
HINT:
Use a torque wrench with a fulcrum length of 750 mm (29.53 in.).

cardiagn.com

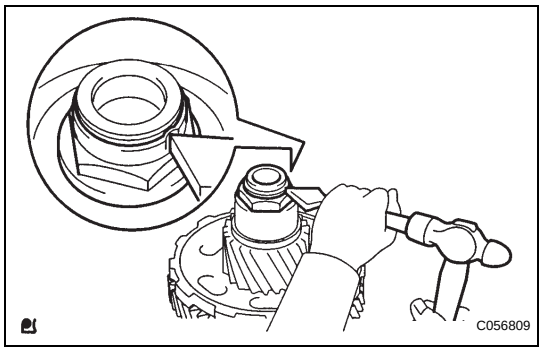

(c) Using a chisel and hammer, stake the lock nut.
CAUTION:
Be sure that there are no cracks on the nut.

cardiagn.com

UNDERDRIVE CLUTCH

COMPONENTS

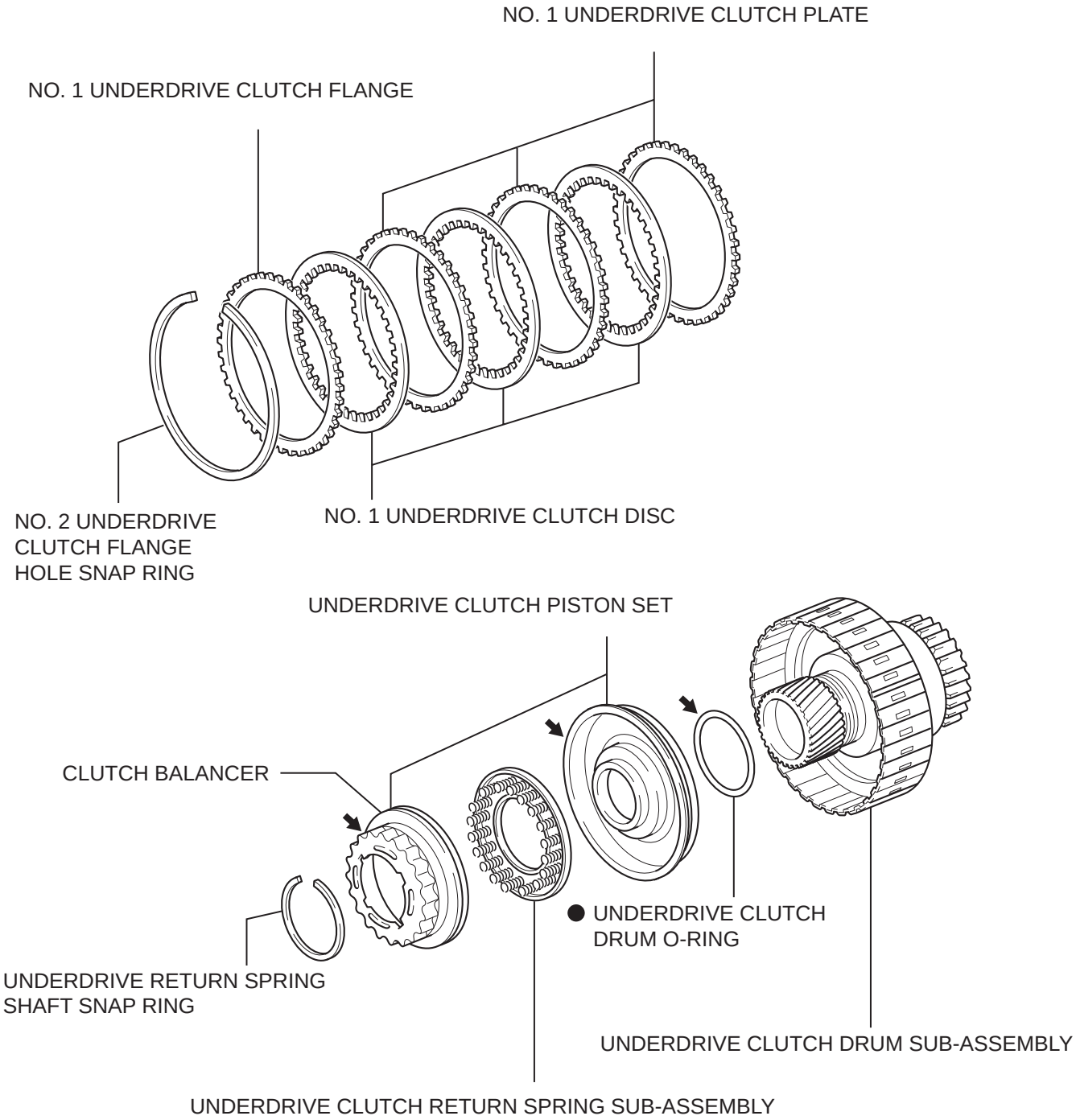

● Non-reusable part

← Apply ATF WS

C132392E01

cardiagn.com

DISASSEMBLY

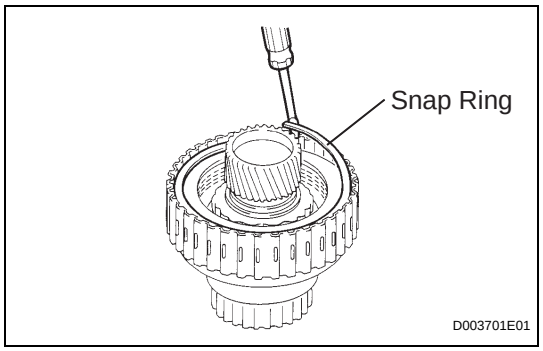

1. REMOVE NO. 2 UNDERDRIVE CLUTCH FLANGE HOLE SNAP RING

(a) Using a screwdriver, remove the No. 2 underdrive clutch flange hole snap ring.

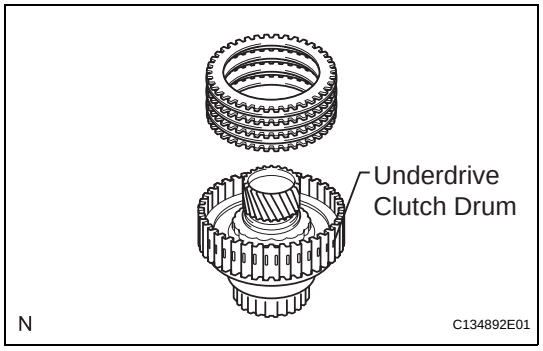

2. REMOVE NO. 1 UNDERDRIVE CLUTCH DISC

(a) Remove the flange, 3 discs, and 3 plates from the underdrive clutch drum.

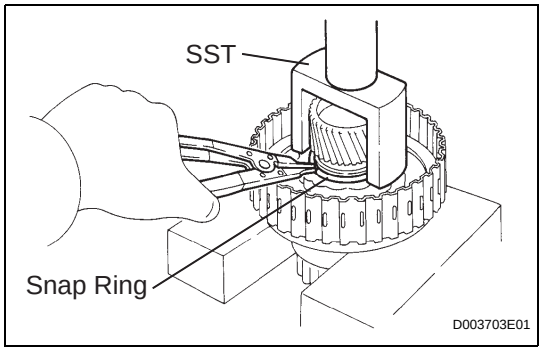

3. REMOVE UNDERDRIVE CLUTCH RETURN SPRING SUB-ASSEMBLY

(a) Place SST on the clutch balancer and compress the spring with a press.
SST 09350-32014 (09351-32070)

(b) Using a snap ring expander, remove the snap ring.
NOTICE:
- **Stop the press when the spring seat is lowered to the place 1 to 2 mm (0.039 to 0.078 in.) from the snap ring groove. This prevents the spring seat from being deformed.**
- **Do not expand the snap ring excessively.**

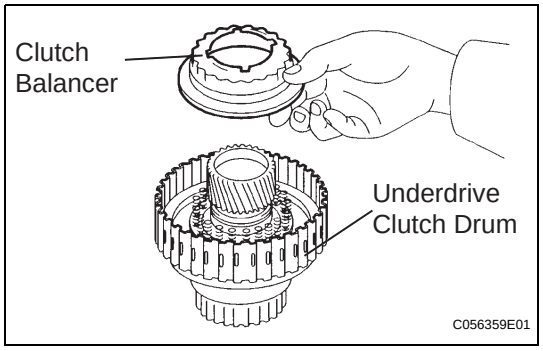

(c) Remove the clutch balancer from the underdrive clutch drum.

cardiagn.com

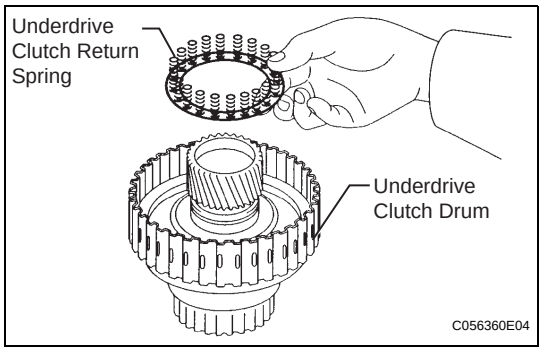

(d) Remove the return spring from the underdrive clutch drum.

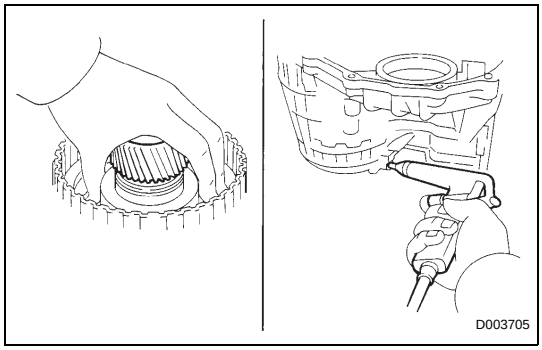

4. REMOVE UNDERDRIVE CLUTCH PISTON SET

(a) Remove the underdrive clutch from the transaxle case.
NOTICE:
Be careful not to damage the oil seal ring.

(b) Holding the underdrive clutch piston by hand, apply compressed air (392 kPa, 4.0 kgf/cm ^{2}, 57 psi) to the transaxle case to remove the underdrive clutch piston.

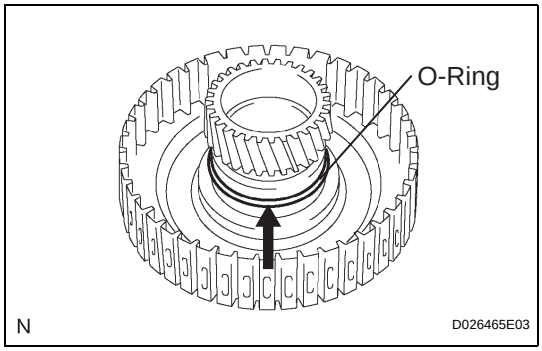

5. REMOVE UNDERDRIVE CLUTCH DRUM O-RING

(a) Using a screwdriver, remove the O-ring from the underdrive clutch drum.

INSPECTION

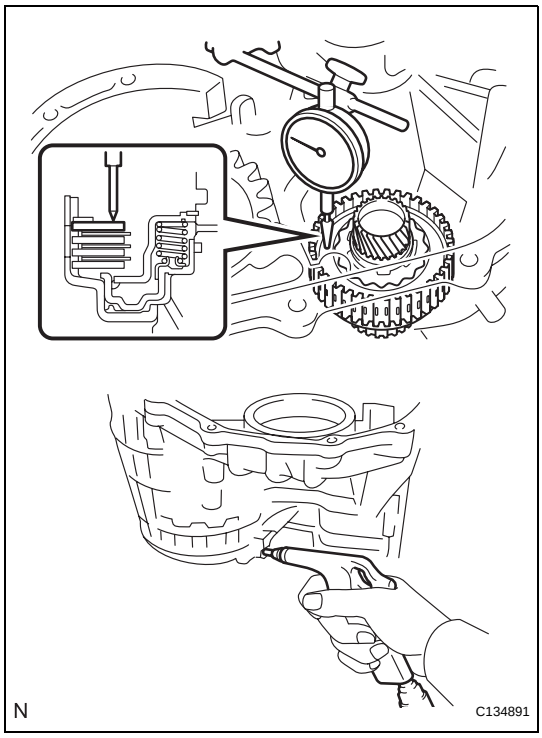

1. INSPECT UNDERDRIVE PACK CLEARANCE

(a) Install the underdrive clutch to the transaxle case.
NOTICE:
Be careful not to damage the oil seal rings.

(b) Install a dial indicator as shown in the illustration.

(c) Measure the underdrive clutch pack clearance while applying and releasing compressed air (392 kPa, 4.0 kgf/cm^2, 57 psi).
Pack clearance:
1.51 to 1.71 mm (0.0594 to 0.0673 in.)
If the pack clearance is not within the specified range, inspect the discs, plates, and flange.

cardiagn.com

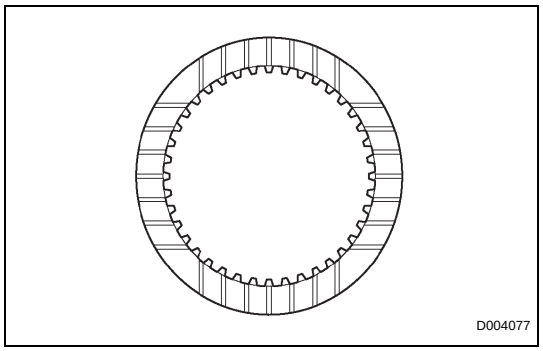

2. INSPECT NO. 1 UNDERDRIVE CLUTCH DISC

(a) Check if the sliding surfaces of the discs, plates and flange are worn or burnt. If necessary, replace them.
HINT:
- If the lining of a disc comes off or discolors, or even if a part of the groove is damaged, replace all discs.
- Before assembling new discs, soak them in ATF for at least 15 minutes.

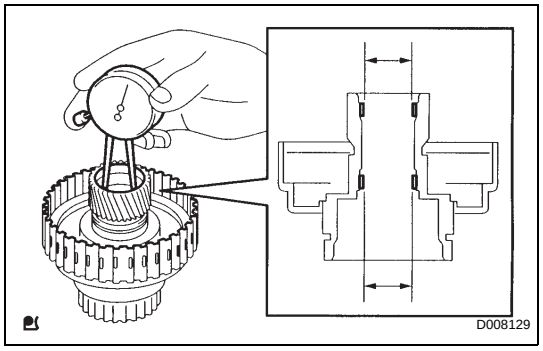

3. INSPECT UNDERDRIVE CLUTCH DRUM SUB-ASSEMBLY

(a) Using a dial indicator, measure the inside diameter of the underdrive clutch drum bushing.
Standard inside diameter:
32.56 to 32.58 mm (1.2818 to 1.2826 in.)
Maximum inside diameter:
32.63 mm (1.2846 in.)
If the inside diameter is greater than the maximum, replace the underdrive clutch drum.

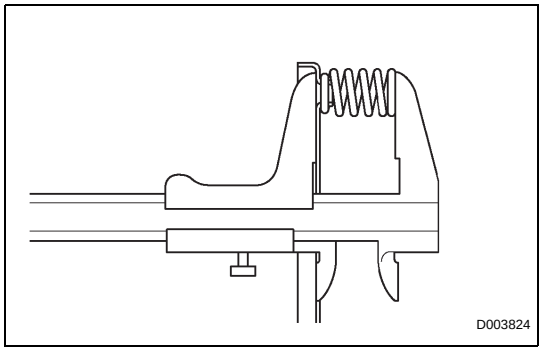

4. INSPECT UNDERDRIVE CLUTCH RETURN SPRING SUB-ASSEMBLY

(a) Using vernier calipers, measure the free length of the spring together with the spring seat.
Standard free length:
17.14 mm (0.6748 in.)
If the free length is shorter than the standard free length, replace the underdrive clutch return spring sub-assembly.

REASSEMBLY

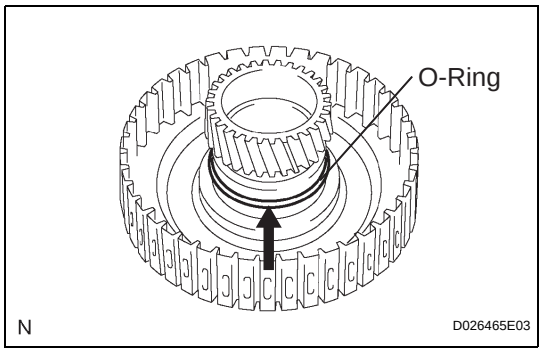

1. INSTALL UNDERDRIVE CLUTCH DRUM O-RING

(a) Coat a new O-ring with ATF, and install it to the underdrive clutch drum.
NOTICE:
Install the O-ring carefully not to have a twist or a pinching.

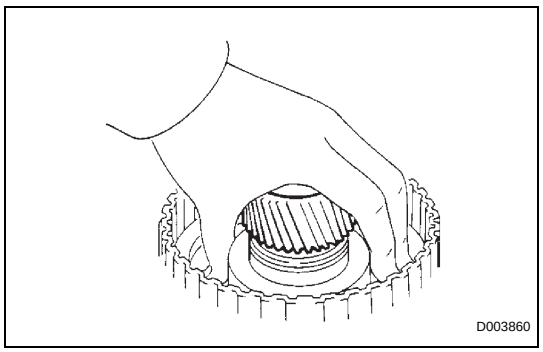

2. INSTALL UNDERDRIVE CLUTCH PISTON SET

(a) Coat the underdrive clutch piston with ATF, and install it to the underdrive clutch piston drum.
NOTICE:
- **Be careful not to damage the O-ring.**
- **Be careful not to damage the lip seal of the piston.**

cardiagn.com

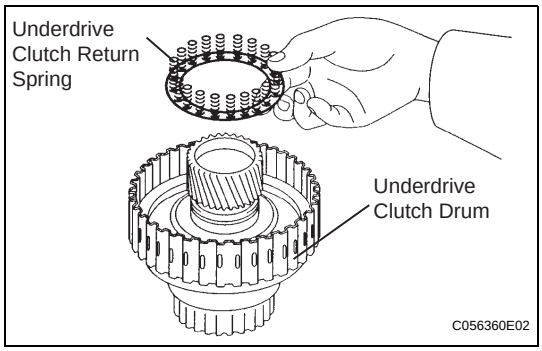

3. INSTALL UNDERDRIVE CLUTCH RETURN SPRING SUB-ASSEMBLY

(a) Install the return spring to the underdrive clutch drum.
NOTICE:
After installing the spring sub-assembly, check all of the springs are fitted in the piston correctly.

(b) Coat the clutch balancer with ATF.

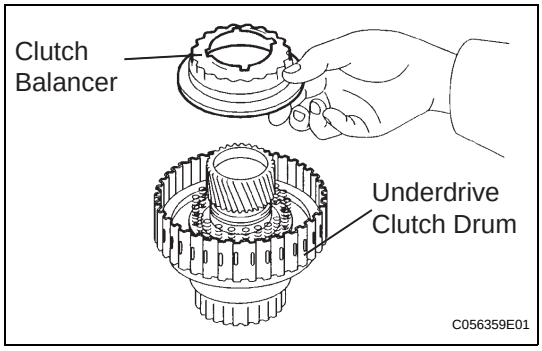

(c) Install the clutch balancer to the underdrive clutch drum.
NOTICE:
Be careful not to damage the lip seal of the clutch balancer.

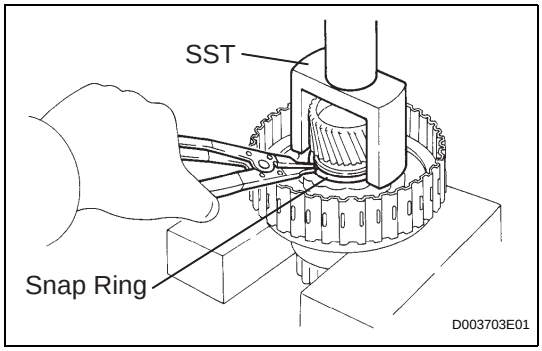

(d) Place SST on the clutch balancer and compress the piston return spring with a press.
SST 09350-32014 (09351-32070)

(e) Using a snap ring expander, install the snap ring to the underdrive clutch drum.
NOTICE:
- **Stop the press when the spring seat is lowered to the place 1 to 2 mm (0.039 to 0.078 in.) from the snap ring groove. This prevents the spring seat from being deformed.**
- **Do not expand the snap ring excessively.**

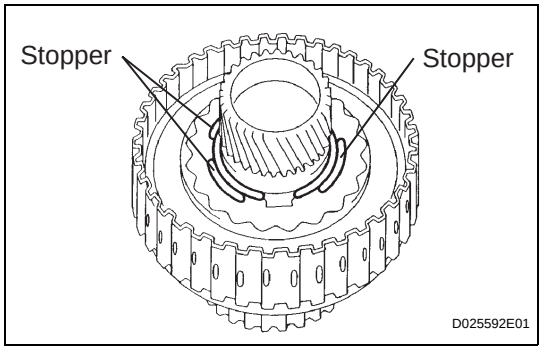

(f) Position the end gap of the snap ring in the underdrive clutch drum as shown in the illustration.
NOTICE:
The end gap of the snap ring should not be aligned with any of the stoppers.

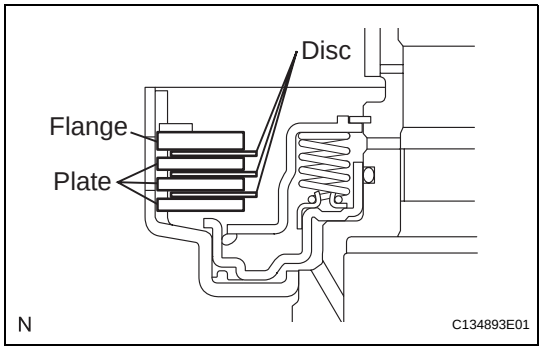

4. INSTALL NO. 1 UNDERDRIVE CLUTCH DISC

(a) Coat the 3 discs with ATF.

(b) Install the 3 plates, 3 discs, and flange to the underdrive clutch drum.
NOTICE:
Be careful about the order of discs, plates, and flange.

cardiagn.com

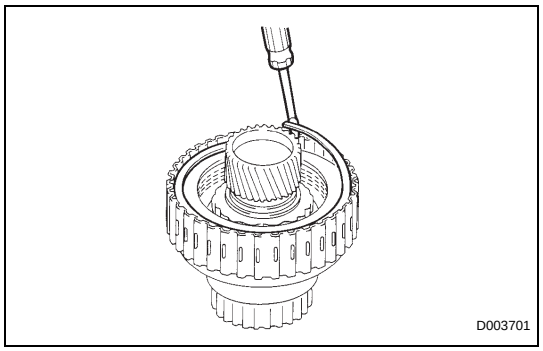

5. INSTALL NO. 2 UNDERDRIVE CLUTCH FLANGE HOLE SNAP RING

(a) Using a screwdriver, install the No. 2 underdrive clutch flange hole snap ring.

(b) Check that the end gap of the snap ring is not aligned with one of the cutouts.

NOTICE:

The snap ring should be securely engaged in the groove of the drum.

cardiagn.com

SHIFT SOLENOID VALVE

COMPONENTS

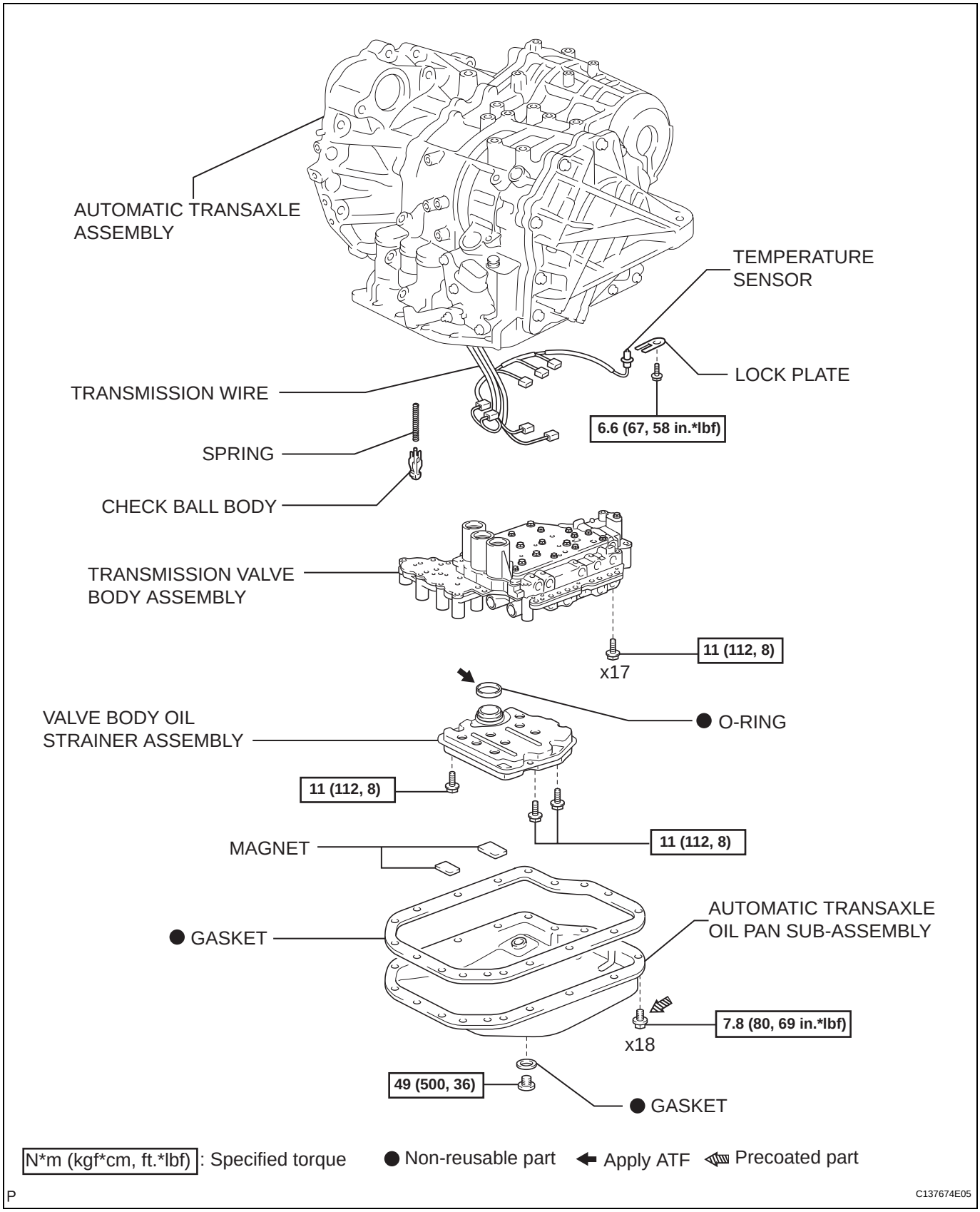

cardiagn.com

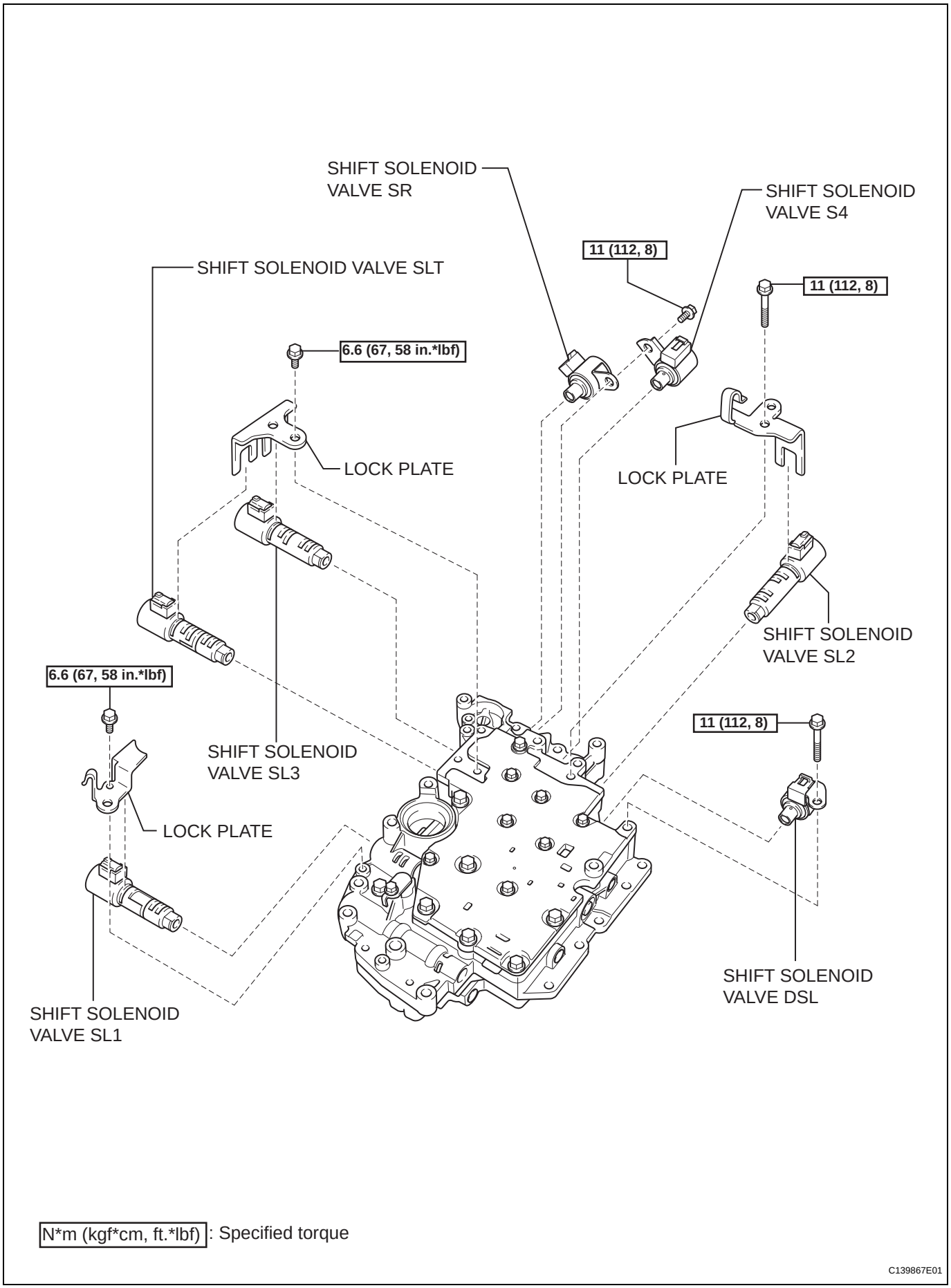

cardiagn.com

REMOVAL

1. **REMOVE AUTOMATIC TRANSAXLE ASSEMBLY**
   HINT:
   See page AX-162.
2. **REMOVE AUTOMATIC TRANSAXLE OIL PAN SUB-ASSEMBLY (See page AX-138)**
3. **DISCONNECT TRANSMISSION WIRE (See page AX-138)**
4. **REMOVE VALVE BODY OIL STRAINER ASSEMBLY (See page AX-139)**
5. **REMOVE TRANSMISSION VALVE BODY ASSEMBLY (See page AX-139)**

DISASSEMBLY

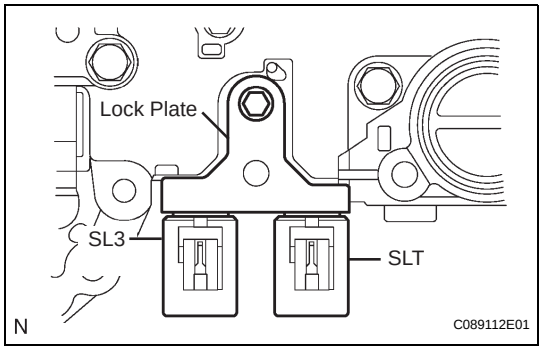

1. **REMOVE SHIFT SOLENOID VALVE SL3**
   (a) Remove the bolt and lock plate from the valve body assembly.
   (b) Remove the shift solenoid valve SL3 from the valve body assembly.
2. **REMOVE SHIFT SOLENOID VALVE SLT**
   (a) Remove the shift solenoid valve SLT from the valve body assembly.

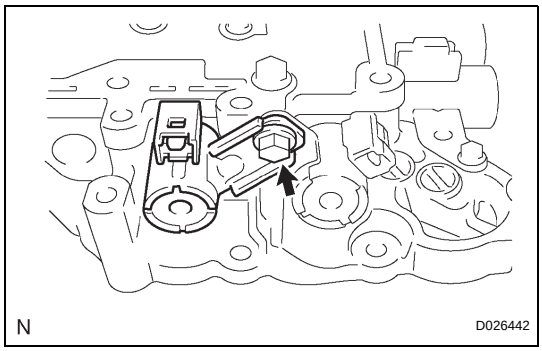

3. **REMOVE SHIFT SOLENOID VALVE S4**
   (a) Remove the bolt and shift solenoid valve S4 from the valve body assembly.

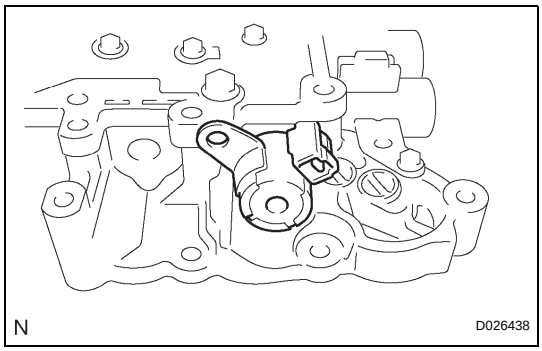

4. **REMOVE SHIFT SOLENOID VALVE SR**
   (a) Remove the shift solenoid valve SR from the valve body assembly.

cardiagn.com

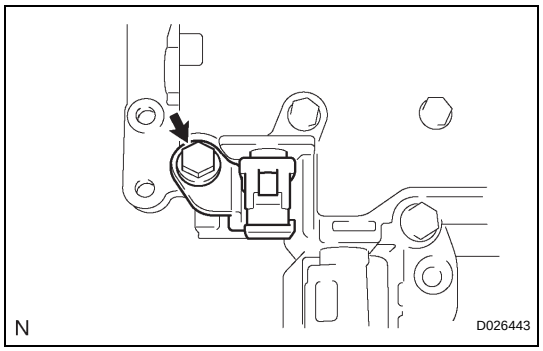

5. REMOVE SHIFT SOLENOID VALVE DSL

(a) Remove the bolt and shift solenoid valve DSL from the valve body assembly.

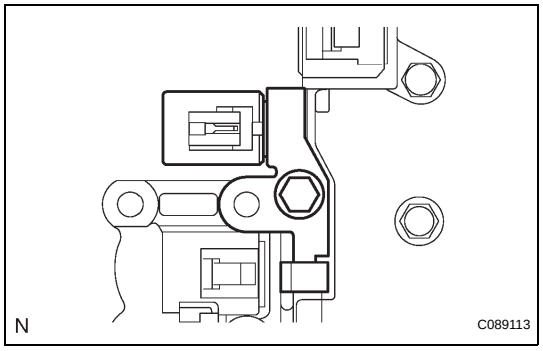

6. REMOVE SHIFT SOLENOID VALVE SL2

(a) Remove the bolt, lock plate and shift solenoid valve SL2 from the valve body assembly.

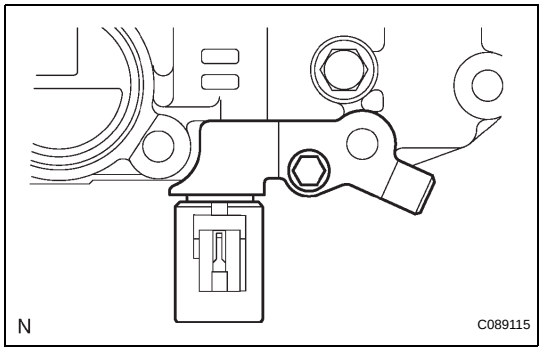

7. REMOVE SHIFT SOLENOID VALVE SL1

(a) Remove the bolt, lock plate and shift solenoid valve SL1 from the valve body assembly.

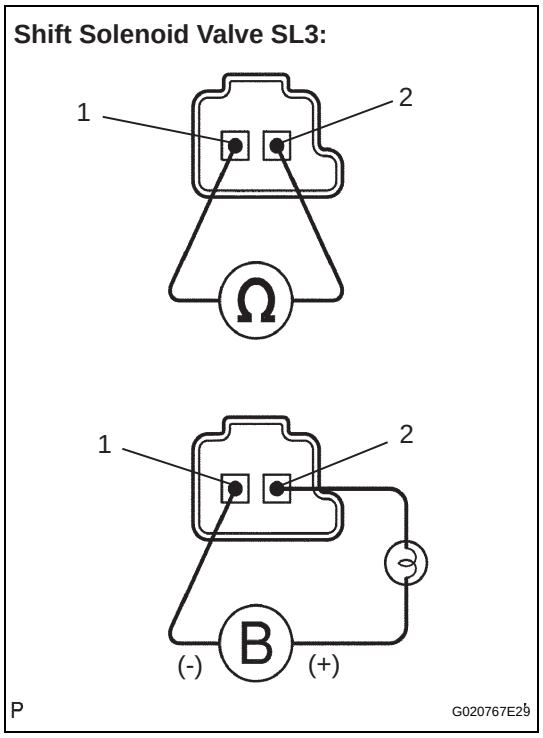

INSPECTION

1. INSPECT SHIFT SOLENOID VALVE SL3

(a) Measure the resistance according to the value(s) in the table below.

Standard resistance

Tester Connection	Specified Condition 20°C (68°F)
1 - 2	5.0 to 5.6 Ω

If the value is not as specified, replace the shift solenoid valve.

(b) Connect the positive (+) lead to terminal 2 of the solenoid connector, and the negative (-) lead to terminal 1 of the solenoid connector.

OK:

The solenoid valve makes an operating sound.

If the result is not as specified, replace the shift solenoid valve.

cardiagn.com

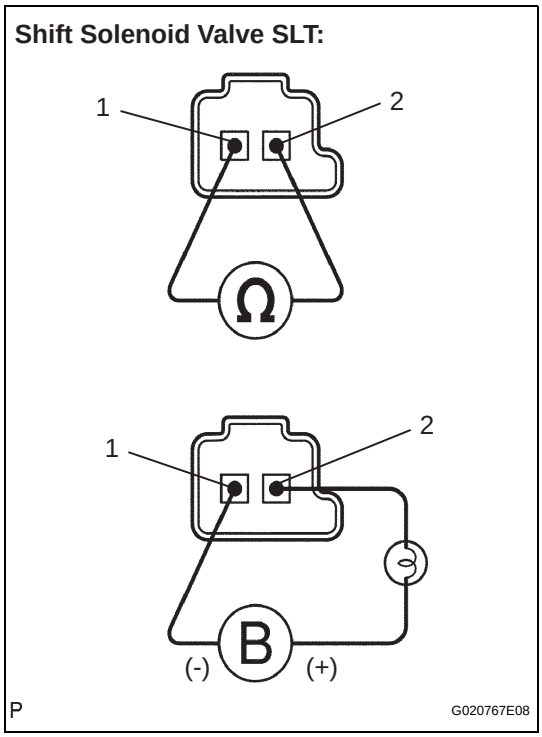

2. INSPECT SHIFT SOLENOID VALVE SLT

(a) Measure the resistance according to the value(s) in the table below.

Standard resistance

Tester Connection	Specified Condition 20°C (68°F)
1 - 2	5.0 to 5.6 Ω

If the value is not as specified, replace the shift solenoid valve.

(b) Connect the positive (+) lead to terminal 2 of the solenoid connector, and the negative (-) lead to terminal 1 of the solenoid connector.

OK:

The solenoid valve makes an operating sound.

If the result is not as specified, replace the shift solenoid valve.

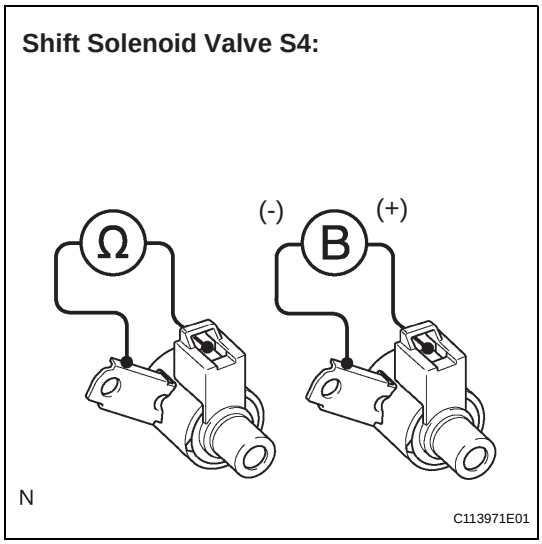

3. INSPECT SHIFT SOLENOID VALVE S4

(a) Measure the resistance according to the value(s) in the table below.

Standard resistance

Tester Connection	Specified Condition 20°C (68°F)
Solenoid Connector (S4) - Solenoid Body (S4)	11 to 15 Ω

If the value is not as specified, replace the shift solenoid valve.

(b) Connect the positive (+) lead to the terminal of the solenoid connector, and the negative (-) lead to the solenoid body.

OK:

The solenoid valve makes an operating sound.

If the result is not as specified, replace the shift solenoid valve.

cardiagn.com

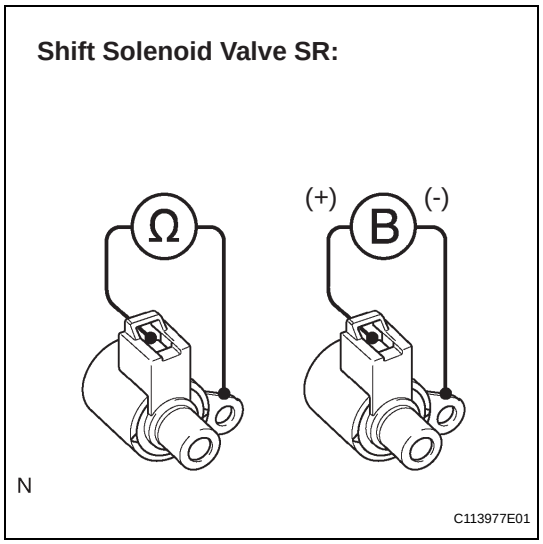

4. INSPECT SHIFT SOLENOID VALVE SR

(a) Measure the resistance according to the value(s) in the table below.

Standard resistance

Tester Connection	Specified Condition 20°C (68°F)
Solenoid Connector (SR) - Solenoid Body (SR)	11 to 15 Ω

If the value is not as specified, replace the shift solenoid valve.

(b) Connect the positive (+) lead to the terminal of the solenoid connector, and the negative (-) lead to the solenoid body.

OK:

The solenoid valve makes an operating sound.

If the result is not as specified, replace the shift solenoid valve.

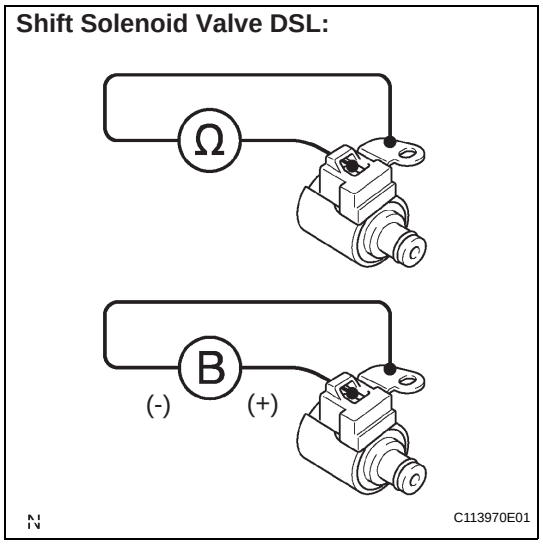

5. INSPECT SHIFT SOLENOID VALVE DSL

(a) Measure the resistance according to the value(s) in the table below.

Standard resistance

Tester Connection	Specified Condition 20°C (68°F)
Solenoid Connector (DSL) - Solenoid Body (DSL)	11 to 15 Ω

If the value is not as specified, replace the shift solenoid valve.

(b) Connect the positive (+) lead to the terminal of the solenoid connector, and the negative (-) lead to the solenoid body.

OK:

The solenoid valve makes an operating sound.

If the result is not as specified, replace the shift solenoid valve.

cardiagn.com

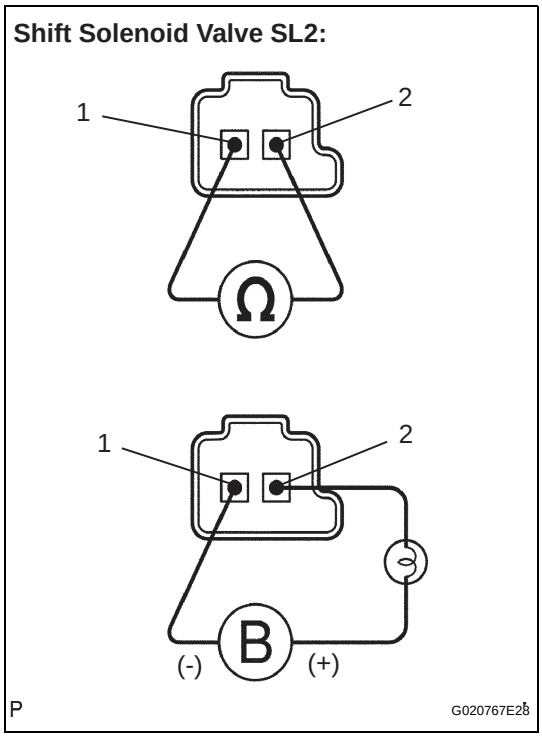

6. INSPECT SHIFT SOLENOID VALVE SL2

(a) Measure the resistance according to the value(s) in the table below.

Standard resistance

Tester Connection	Specified Condition 20°C (68°F)
1 - 2	5.0 to 5.6 Ω

If the value is not as specified, replace the shift solenoid valve.

(b) Connect the positive (+) lead to terminal 2 of the solenoid connector, and the negative (-) lead to terminal 1 of the solenoid connector.

OK:

The solenoid valve makes an operating sound.

If the result is not as specified, replace the shift solenoid valve.

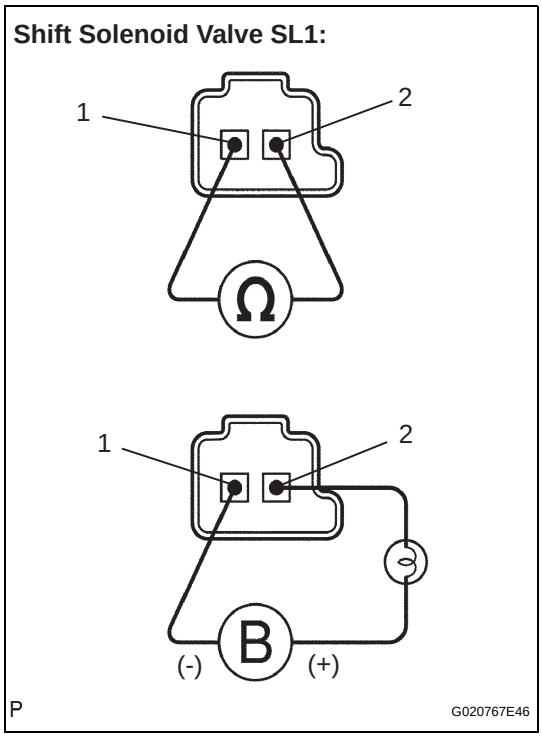

7. INSPECT SHIFT SOLENOID VALVE SL1

(a) Measure the resistance according to the value(s) in the table below.

Standard resistance

Tester Connection	Specified Condition 20°C (68°F)
1 - 2	5.0 to 5.6 Ω

If the value is not as specified, replace the shift solenoid valve.

(b) Connect the positive (+) lead to terminal 2 of the solenoid connector, and the negative (-) lead to terminal 1 of the solenoid connector.

OK:

The solenoid valve makes an operating sound.

If the result is not as specified, replace the shift solenoid valve.

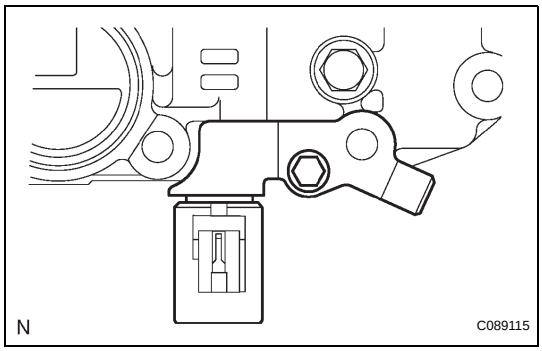

REASSEMBLY

1. INSTALL SHIFT SOLENOID VALVE SL1

(a) Install the shift solenoid valve SL1 and lock plate to the valve body assembly with the bolt.

Torque: 6.6 N*m (67 kgf*cm, 58 in.*lbf)

cardiagn.com

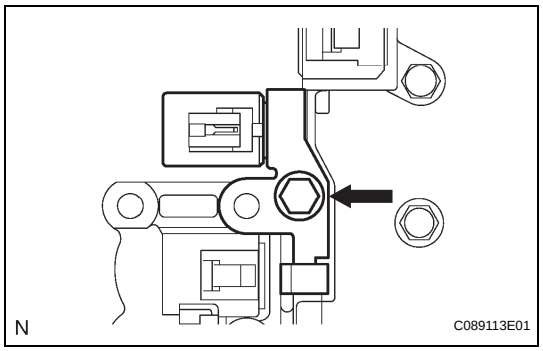

2. INSTALL SHIFT SOLENOID VALVE SL2

(a) Install the shift solenoid valve SL2 and lock plate to the valve body assembly with the bolt.
Torque: 11 N*m (112 kgf*cm, 8 ft.*lbf)

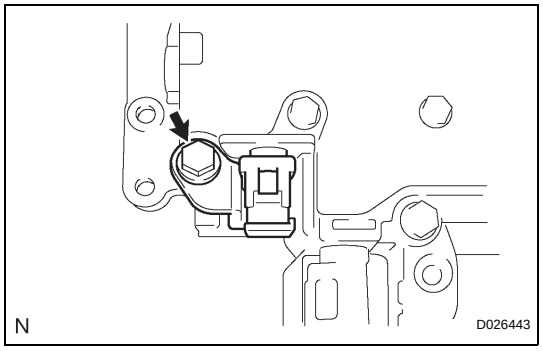

3. INSTALL SHIFT SOLENOID VALVE DSL

(a) Install the shift solenoid valve DSL to the valve body assembly with the bolt.
Torque: 11 N*m (112 kgf*cm, 8 ft.*lbf)

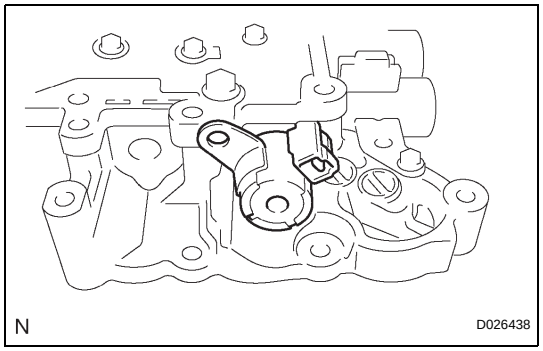

4. INSTALL SHIFT SOLENOID VALVE SR

(a) Install the shift solenoid valve SR to the valve body assembly.

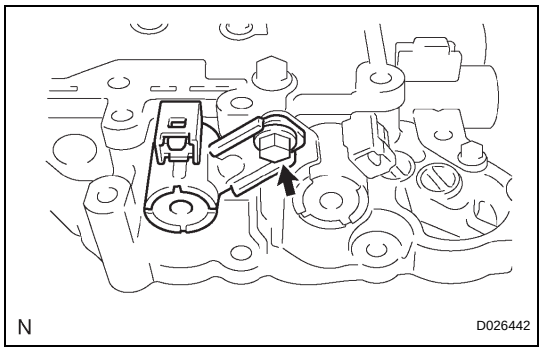

5. INSTALL SHIFT SOLENOID VALVE S4

(a) Install the shift solenoid valve S4 to the valve body assembly with the bolt.
Torque: 11 N*m (112 kgf*cm, 8 ft.*lbf)

6. INSTALL SHIFT SOLENOID VALVE SL3

(a) Install the shift solenoid valve SL3 to the valve body assembly.

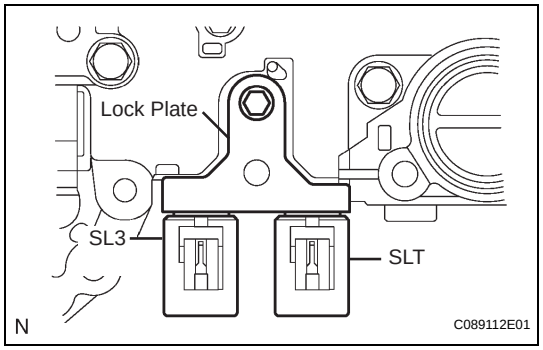

7. INSTALL SHIFT SOLENOID VALVE SLT

(a) Install the shift solenoid valve SLT and lock plate to the valve body assembly with the bolt.
Torque: 6.6 N*m (67 kgf*cm, 58 in.*lbf)

cardiagn.com

INSTALLATION

1. **INSTALL TRANSMISSION VALVE BODY ASSEMBLY (See page AX-139)**
2. **INSTALL VALVE BODY OIL STRAINER ASSEMBLY (See page AX-140)**
3. **INSTALL TRANSMISSION WIRE (See page AX-140)**
4. **INSTALL AUTOMATIC TRANSAXLE OIL PAN SUB-ASSEMBLY (See page AX-141)**
5. **CONNECT CABLE TO NEGATIVE BATTERY TERMINAL (See page AX-141)**
6. **INSTALL AUTOMATIC TRANSAXLE ASSEMBLY** (See page AX-168)

cardiagn.com

DIFFERENTIAL CASE

COMPONENTS

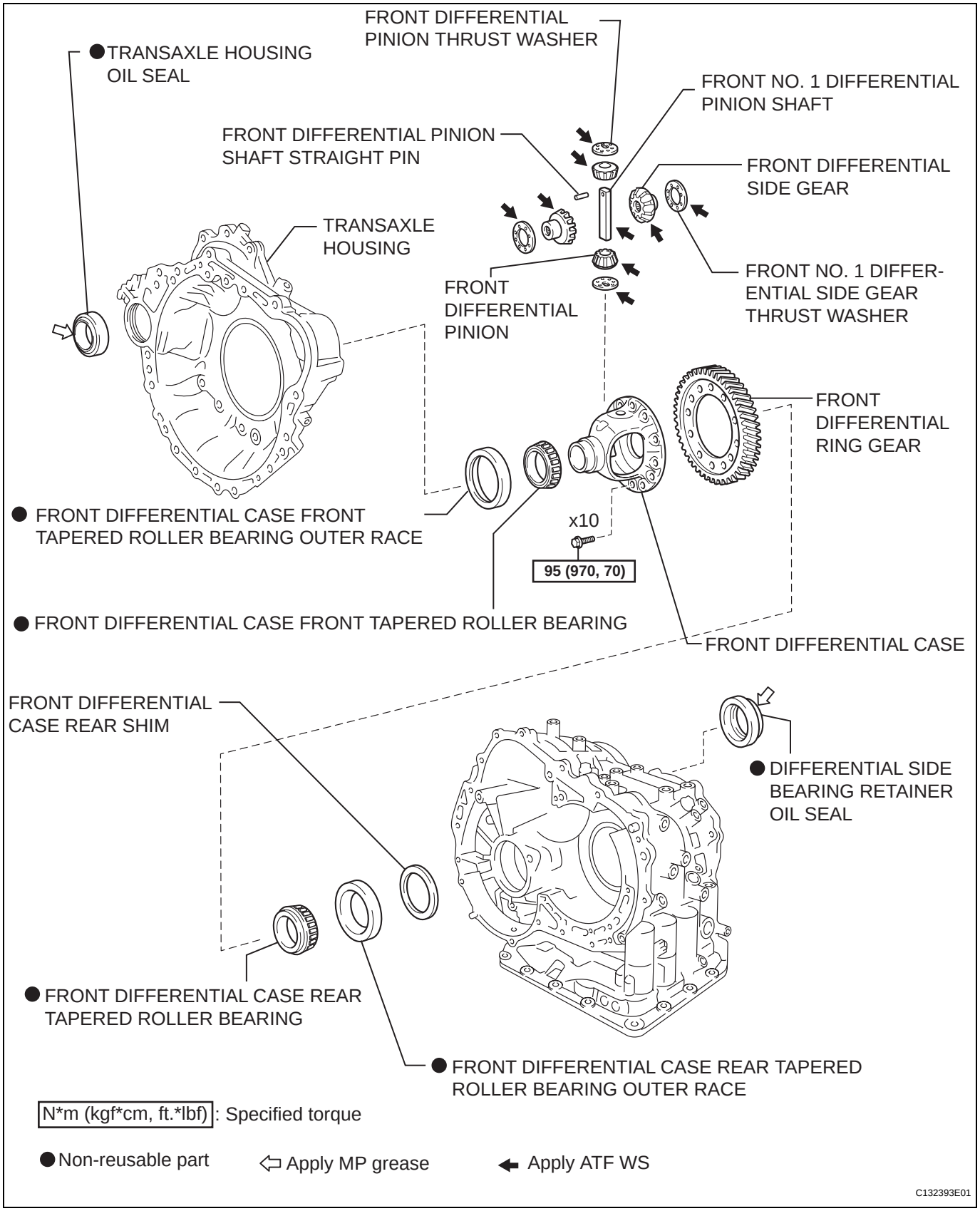

cardiagn.com

REMOVAL

1. REMOVE DIFFERENTIAL GEAR ASSEMBLY (See page AX-212)

DISASSEMBLY

1. REMOVE FRONT DIFFERENTIAL RING GEAR

(a) Put matchmarks on the front differential ring gear and differential case.

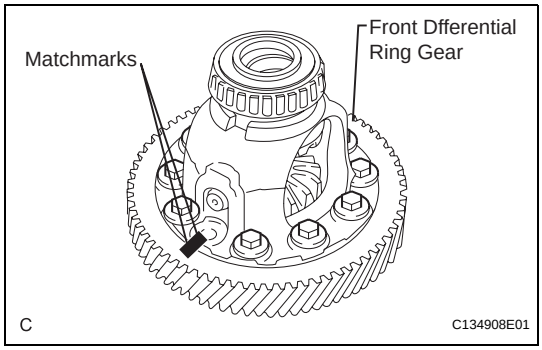

(b) Remove the 10 bolts.

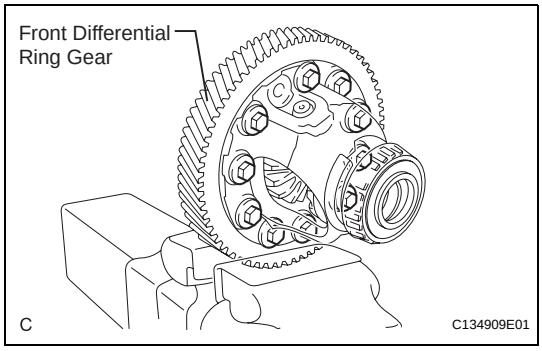

(c) Using a plastic hammer, tap on the front differential ring gear to remove it from the case.

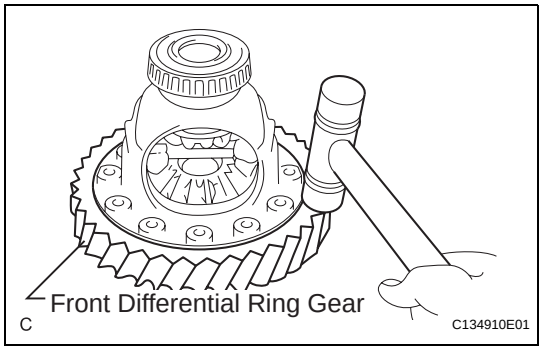

2. REMOVE FRONT DIFFERENTIAL CASE FRONT TAPERED ROLLER BEARING

(a) Using SST, remove the front differential case front tapered roller bearing from the differential case.

SST 09950-00020, 09950-00030, 09950-40011 (09957-04010), 09950-60010 (09951-00480)

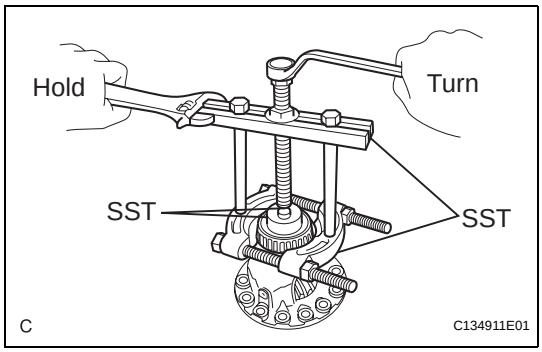

cardiagn.com

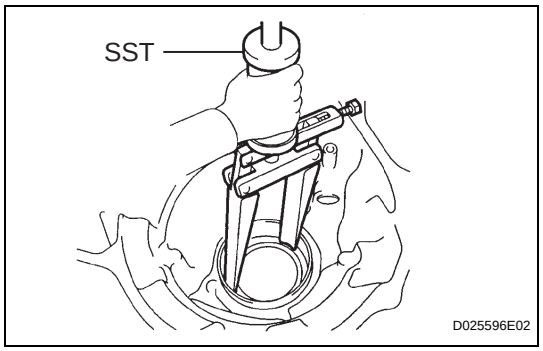

(b) Using SST, remove the front differential case front tapered roller bearing outer race.
SST 09308-00010

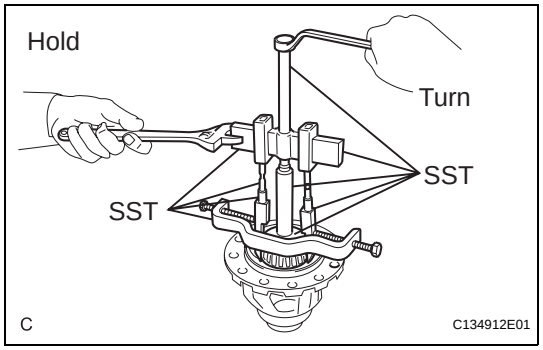

3. REMOVE FRONT DIFFERENTIAL CASE REAR TAPERED ROLLER BEARING

(a) Using SST, remove the front differential case rear tapered roller bearing from the differential case.
SST 09950-00020, 09950-00030, 09950-40011 (09955-04061, 09957-04010, 09958-04011), 09950-50013 (09951-05010, 09952-05010, 09953-05020, 09954-05021, 09955-05010), 09950-60010 (09951-00480), 09950-70010 (09951-07100)

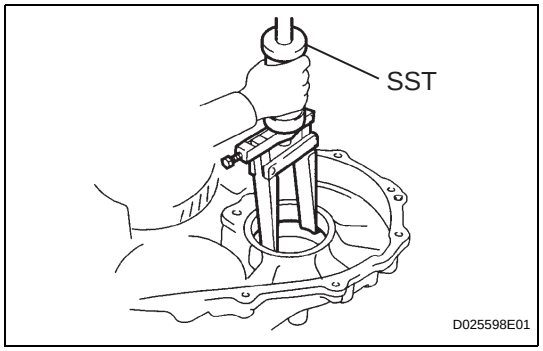

(b) Using SST, remove the front differential case rear tapered roller bearing outer race.
SST 09308-00010

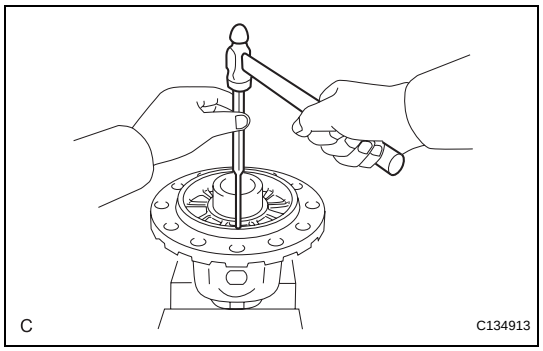

4. REMOVE FRONT DIFFERENTIAL PINION SHAFT STRAIGHT PIN

(a) Using a pin punch and hammer, remove the straight pin.
NOTICE:
Before removing the straight pin, unstake it with a pin punch.

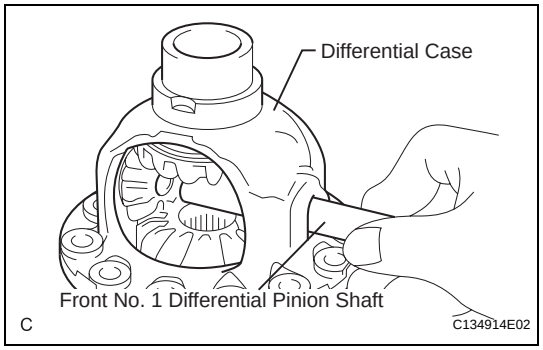

5. REMOVE FRONT NO. 1 DIFFERENTIAL PINION SHAFT

(a) Remove the front No. 1 differential pinion shaft from the differential case.

cardiagn.com

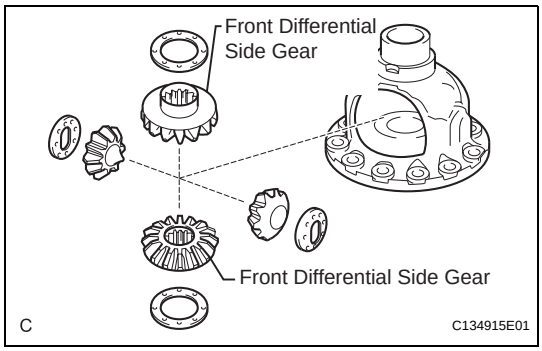

6. REMOVE FRONT DIFFERENTIAL SIDE GEAR

(a) Remove the 2 front differential pinions, 2 pinion thrust washers, 2 front differential side gears and 2 side gear thrust washers from the differential case.

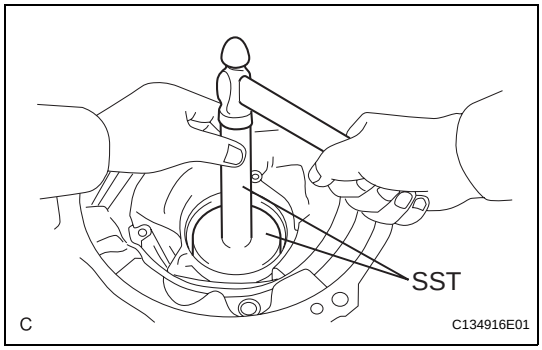

7. REMOVE TRANSAXLE HOUSING OIL SEAL

(a) Using SST and a hammer, remove the oil seal.
SST 09950-70010 (09951-07200), 09950-60010 (09951-00630)

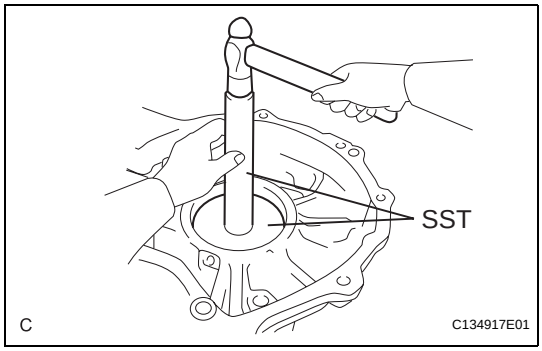

8. REMOVE DIFFERENTIAL SIDE BEARING RETAINER OIL SEAL

(a) Using SST and a hammer, remove the oil seal.
SST 09950-70010 (09951-07100), 09608-10010

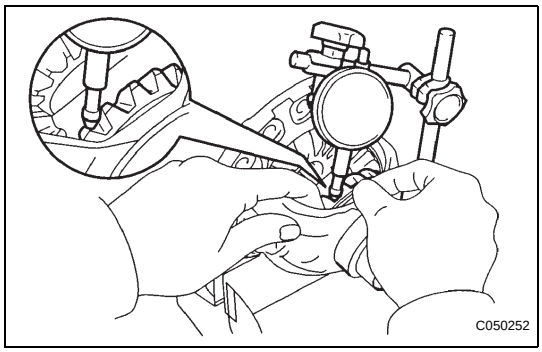

INSPECTION

1. INSPECT BACKLASH

(a) Using a dial indicator, inspect the backlash of the side gear.
Standard backlash:
0.05 to 0.20 mm (0.0020 to 0.0079 in.)
Thrust washer thickness

Mark	Thickness
1	1.000 mm (0.0394 in.)
2	1.100 mm (0.0433 in.)
3	1.200 mm (0.0472 in.)
4	1.300 mm (0.0512 in.)

cardiagn.com

REASSEMBLY

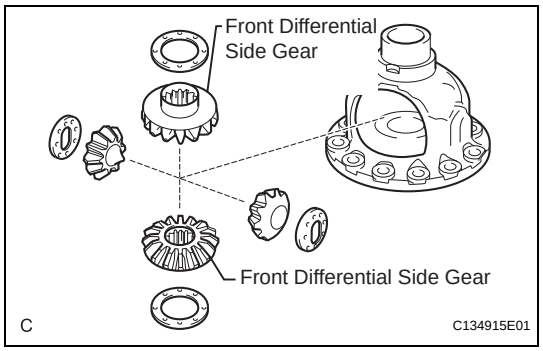

1. INSTALL FRONT DIFFERENTIAL SIDE GEAR

(a) Coat the 2 front differential side gears, 2 side gear thrust washers, 2 front differential pinions and 2 pinion thrust washers with ATF and install them to the differential case.

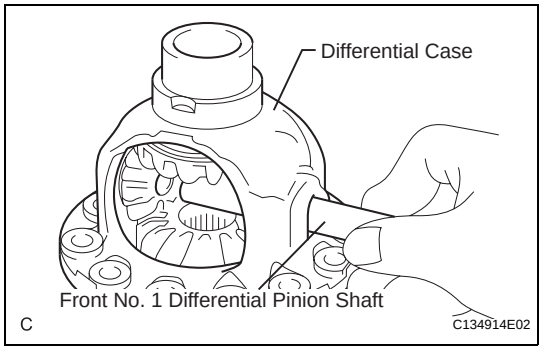

2. INSTALL FRONT NO. 1 DIFFERENTIAL PINION SHAFT

(a) Coat the front No. 1 differential pinion shaft with ATF, and install it to the differential case.

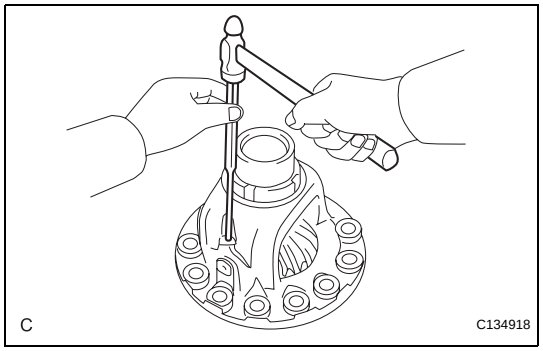

3. INSTALL FRONT DIFFERENTIAL PINION SHAFT STRAIGHT PIN

(a) Using a pin punch and hammer, install the pinion shaft straight pin.

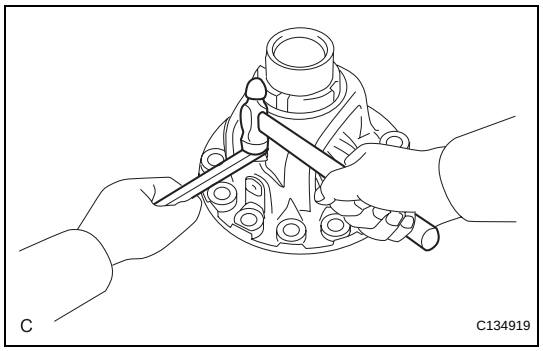

(b) Using a chisel and hammer, stake the differential case.

NOTICE:

Stake it after adjusting the backlash.

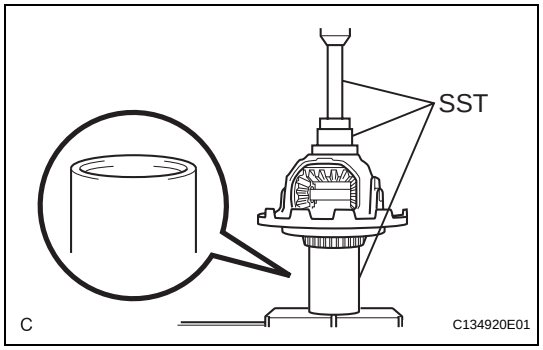

4. INSTALL FRONT DIFFERENTIAL CASE FRONT TAPERED ROLLER BEARING

(a) Using SST and a press, install the front differential case front tapered roller bearing to the differential case.

SST 09550-60010 (09951-00480), 09950-70010 (09951-07100), 09710-04081

NOTICE:

Do not damage the bearing cage during installation of the bearing inner race.

cardiagn.com

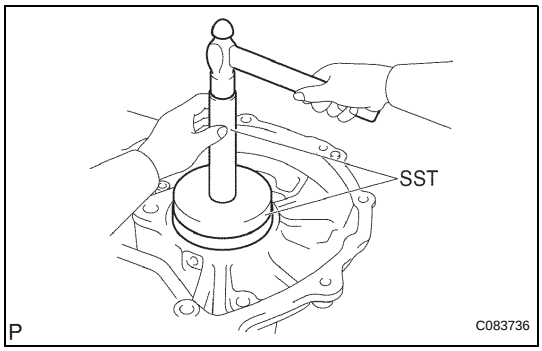

(b) Using SST and a hammer, install the front differential case front tapered roller bearing outer race to the transaxle housing.
SST 09950-60020 (09951-00750), 09950-70010 (09951-07200)

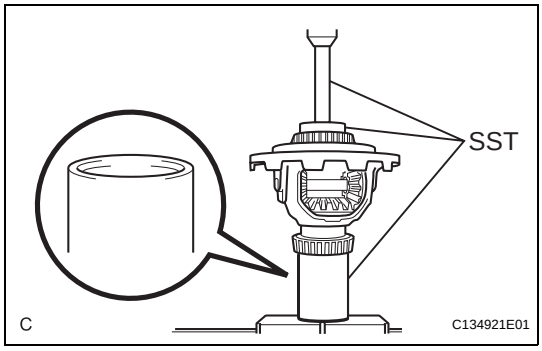

5. INSTALL FRONT DIFFERENTIAL CASE REAR TAPERED ROLLER BEARING

(a) Using SST and a press, install the front differential case rear tapered roller bearing to the differential case.
SST 09710-04081, 09550-60010 (09951-00480), 09950-70010 (09951-07100)
NOTICE:
Do not damage the bearing cage during installation of the bearing inner race.

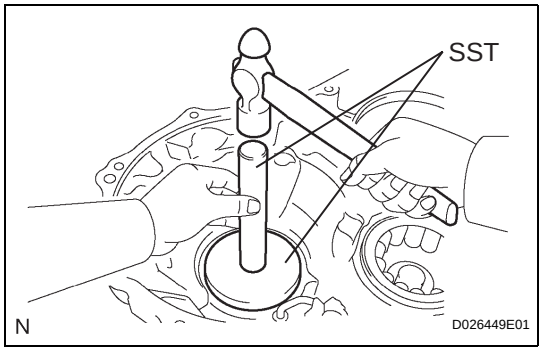

(b) Using SST and a hammer, install the front differential case rear tapered roller bearing outer race to the transaxle housing.
SST 09550-60010 (09951-00790), 09950-70010 (09951-00710)
NOTICE:
Clearance is not allowed between the bearing and transaxle housing.

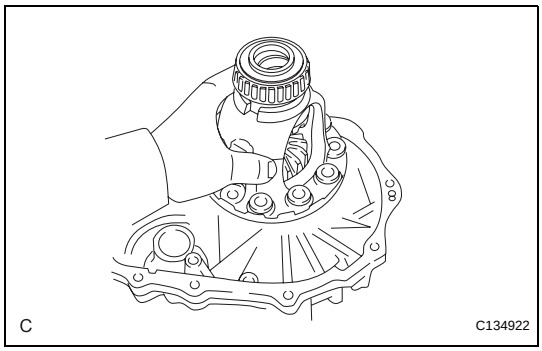

6. ADJUST DIFFERENTIAL SIDE BEARING PRELOAD

(a) Install the differential assembly to the transaxle case.

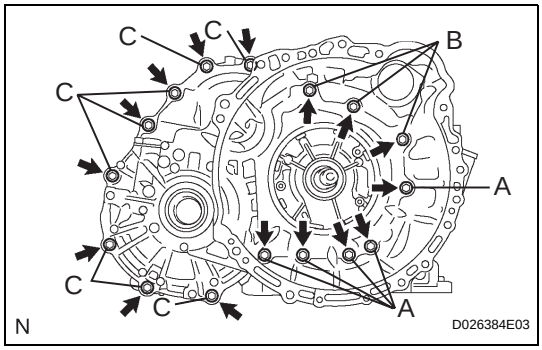

(b) Clean the matching surfaces of the transaxle case and transaxle housing.

(c) Install the transaxle housing to the transaxle case and tighten them with the 16 bolts.
Torque: Bolt A
22 N*m (225 kgf*cm, 16 ft.*lbf)
Bolt B, C
29 N*m (299 kgf*cm, 22 ft.*lbf)
Bolt length:
Bolt A:
50 mm (1.969 in.)

cardiagn.com

Bolt B:
50 mm (1.969 in.)
Bolt C:
42 mm (1.654 in.)

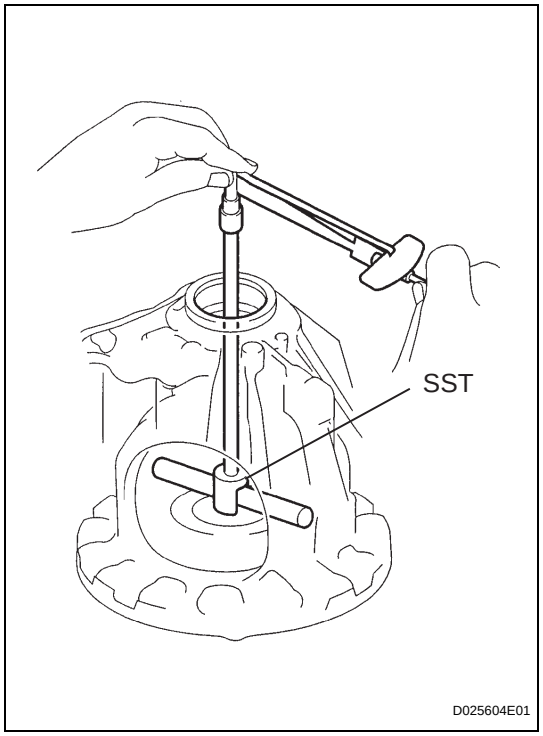

(d) Using SST, turn the differential assembly right and left 2 or 3 times to settle the bearing.
SST 09564-32011

(e) Using SST and a torque wrench, measure the turning torque of the differential.
SST 09564-32011
Turning torque at 60 rpm:
New bearing:
0.20 to 0.69 N*m (2.0 to 7.0 kgf*cm, 1.8 to 6.1 in.*lbf)
Used bearing:
0.10 to 0.35 N*m (1.0 to 3.6 kgf*cm, 0.9 to 3.1 in.*lbf)
HINT:
If the turning torque is not within the specified range, refer to the table below to select a thrust washer so that the turning torque is within the specified range.
Flange thickness: mm (in.)

Mark	Thickness	Mark	Thickness
0	1.90 (0.0748)	A	2.40 (0.0945)
1	1.95 (0.0768)	B	2.45 (0.0965)
2	2.00 (0.0787)	C	2.50 (0.0984)
3	2.05 (0.0807)	D	2.55 (0.1004)
4	2.10 (0.0827)	E	2.60 (0.1024)
5	2.15 (0.0846)	F	2.65 (0.1043)
6	2.20 (0.0866)	G	2.70 (0.1063)
7	2.25 (0.0886)	H	2.75 (0.1083)
8	2.30 (0.0906)	J	2.80 (0.1102)
9	2.35 (0.0925)	-	-

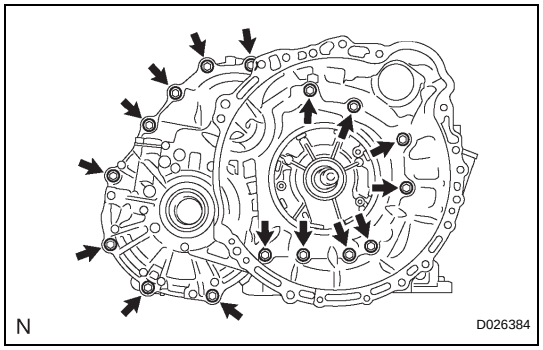

(f) Remove the 16 bolts and the transaxle housing.

cardiagn.com

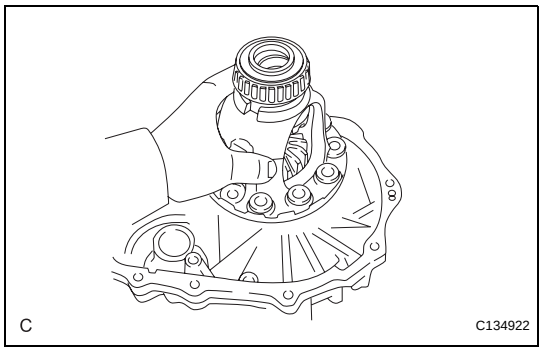

(g) Remove the differential assembly.

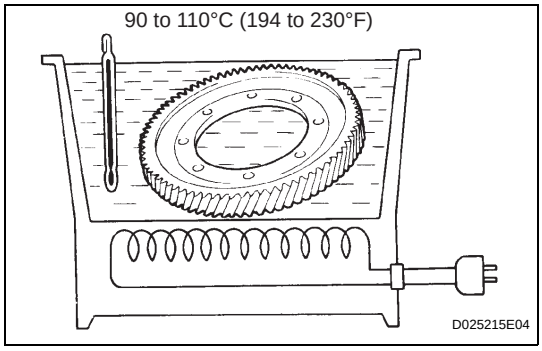

7. INSTALL FRONT DIFFERENTIAL RING GEAR

(a) Using ATF and a heater, heat the front differential ring gear to 90 to 110°C (194.0 to 230.0°F).
NOTICE:
Do not overheat the ring gear over 110°C (230.0°F).

(b) Clean the contact surface of the front differential case.

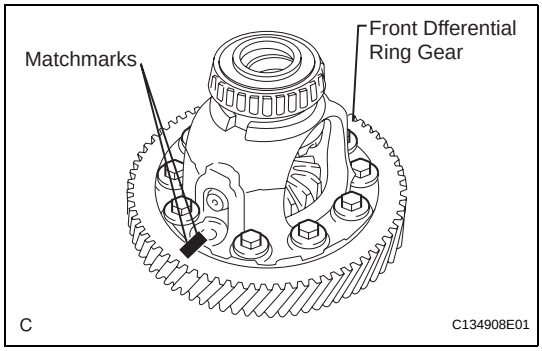

(c) Align the matchmarks, and install the front differential ring gear case quickly.
NOTICE:
Do not install the bolts while the ring gear is hot.

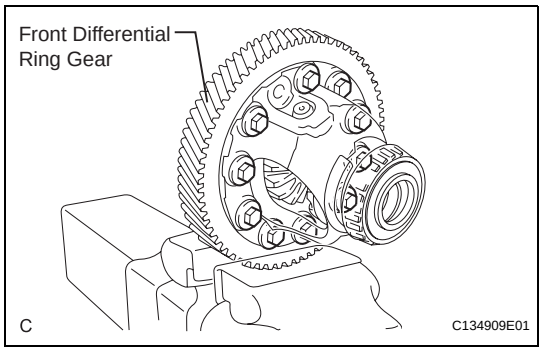

(d) Tighten the 10 bolts.
Torque: 95 N*m (970 kgf*cm, 70 ft.*lbf)
NOTICE:
Tighten the bolts a little at a time in diagonal order.

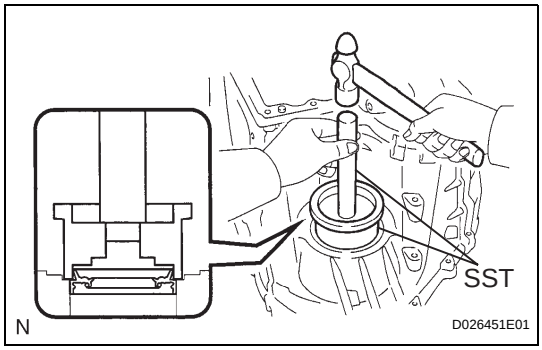

8. INSTALL TRANSAXLE HOUSING OIL SEAL

(a) Using SST and a hammer, drive in a new oil seal.
SST 09608-32010, 09950-70010 (09951-07150)

(b) Coat the lip of the oil seal with a small amount of MP grease.
Oil seal drive in depth:
-0.5 to 0.5 mm (-0.0197 to 0.0197 in.)

cardiagn.com

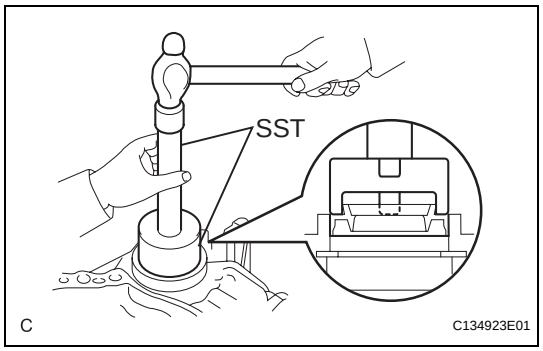

9. INSTALL DIFFERENTIAL SIDE BEARING RETAINER OIL SEAL

(a) Using SST and a hammer, drive in a new oil seal.
SST 09726-36010, 09950-70010 (09951-07150)

(b) Coat the lip of the oil seal with a small amount of MP grease.
Oil seal drive in depth:
-0.5 to 0.5 mm (-0.0197 to 0.0197 in.)

cardiagn.com

INSTALLATION

1. **INSTALL DIFFERENTIAL GEAR ASSEMBLY (See page AX-256)**

cardiagn.com