2005 ENGINE PERFORMANCE

Engine - Diagnostics - RAV4

HOW TO PROCEED WITH TROUBLESHOOTING

Troubleshoot in accordance with the following procedures.

cardiagn.com

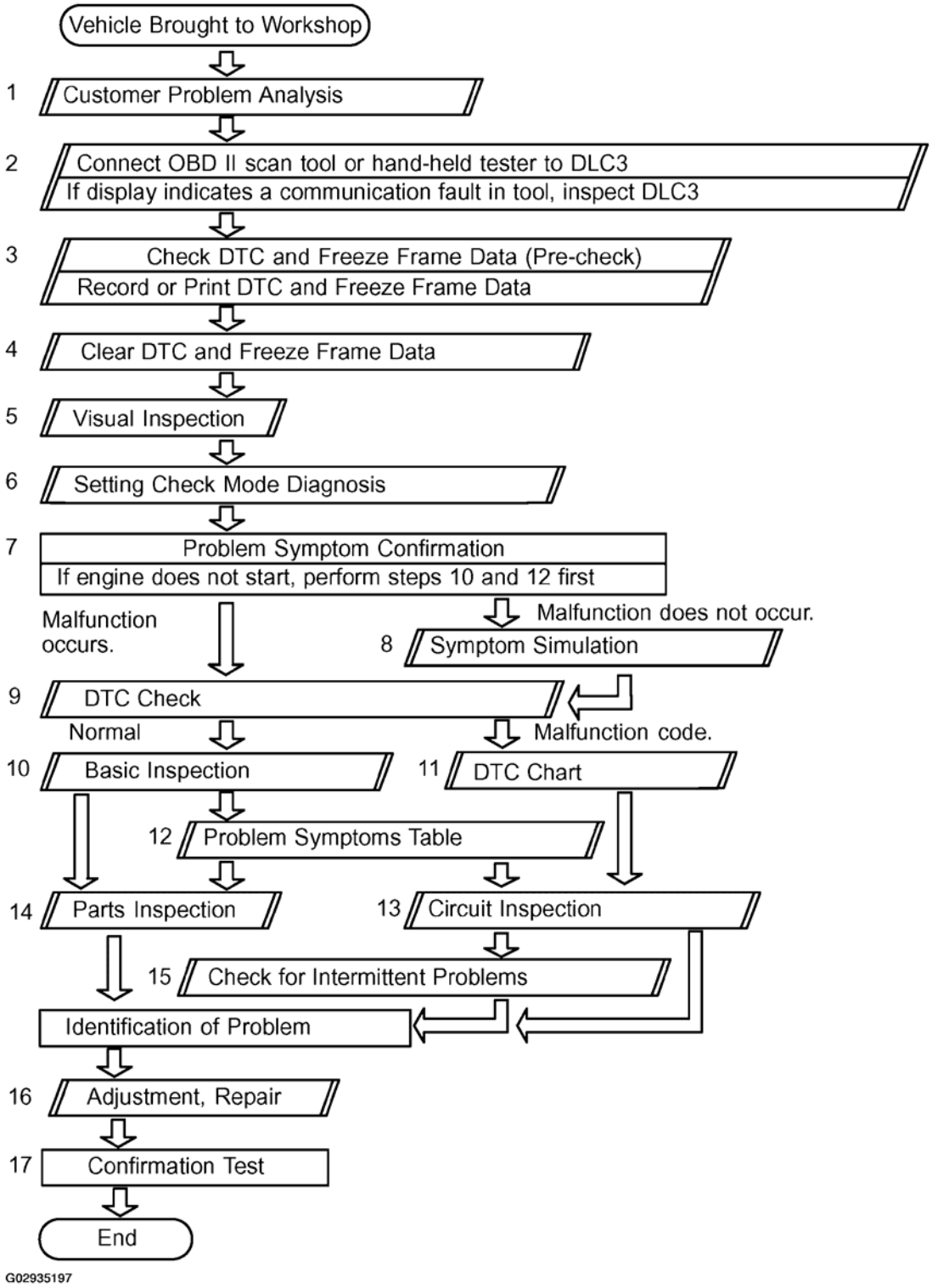

Fig. 1: Troubleshooting Flowchart
Courtesy of TOYOTA MOTOR SALES, U.S.A., INC.

cardiagn.com

CUSTOMER PROBLEM ANALYSIS CHECK

ENGINE Check Sheet

Inspector's Name _____

Customer's Name		VIN	
Date Vehicle Brought in		Production Date	
License Plate No.		Odometer Reading	km miles

Problem Symptoms	☐ Engine does not Start	☐ Engine does not crank ☐ No initial combustion ☐ No complete combustion
	☐ Difficult to Start	☐ Engine cranks slowly ☐ Other _____
	☐ Poor Idling	☐ Incorrect first idle ☐ Idling rpm is abnormal ☐ High (rpm) ☐ Low (rpm) ☐ Rough idling ☐ Other _____
	☐ Poor Drivability	☐ Hesitation ☐ Back fire ☐ Muffler explosion (after-fire) ☐ Surging ☐ Knocking ☐ Other _____
	☐ Engine Stall	☐ Soon after starting ☐ After accelerator pedal depressed ☐ After accelerator pedal released ☐ During A/C operation ☐ Shifting from N to D ☐ Other _____
	☐ Other	

Date Problem Occurred		
Problem Frequency		☐ Constant ☐ Sometimes (times per day/month) ☐ Once only ☐ Other _____
Condition When Problem Occurs	Weather	☐ Fine ☐ Cloudy ☐ Rainy ☐ Snowy ☐ Various/Other_____
	Outdoor Temperature	☐ Hot ☐ Warm ☐ Cool ☐ Cold (approx. ____ °F/____ °C)
	Place	☐ Highway ☐ Suburbs ☐ Inner city ☐ Uphill ☐ Downhill ☐ Rough road ☐ Other _____
	Engine Temperature	☐ Cold ☐ Warming up ☐ After warming up ☐ Any temperature ☐ Other _____
	Engine Operation	☐ Starting ☐ Just after starting (min.) ☐ Idling ☐ Racing ☐ Driving ☐ Constant speed ☐ Acceleration ☐ Deceleration ☐ A/C switch ON/OFF ☐ Other _____

Condition of CHK ENG		☐ Remains on	☐ Sometimes lights up ☐ Does not light up
DTC Inspection	Normal Mode (Pre-check)	☐ Normal	☐ Malfunction code(s) (code) ☐ Freeze frame data ( )
	Check Mode	☐ Normal	☐ Malfunction code(s) (code) ☐ Freeze frame data ( )

G02641695

Fig. 2: Customer Problem Analysis Check Sheet
Courtesy of TOYOTA MOTOR SALES, U.S.A., INC.

PRE-CHECK

1. **DIAGNOSIS SYSTEM**

cardiagn.com

Description

- When troubleshooting On-Board Diagnostic (OBD II) vehicles, the vehicle must be connected to the OBD II scan tool (in compliance with SAE J1978) or the hand-held tester. Various data output from the vehicle's ECM can then be read.

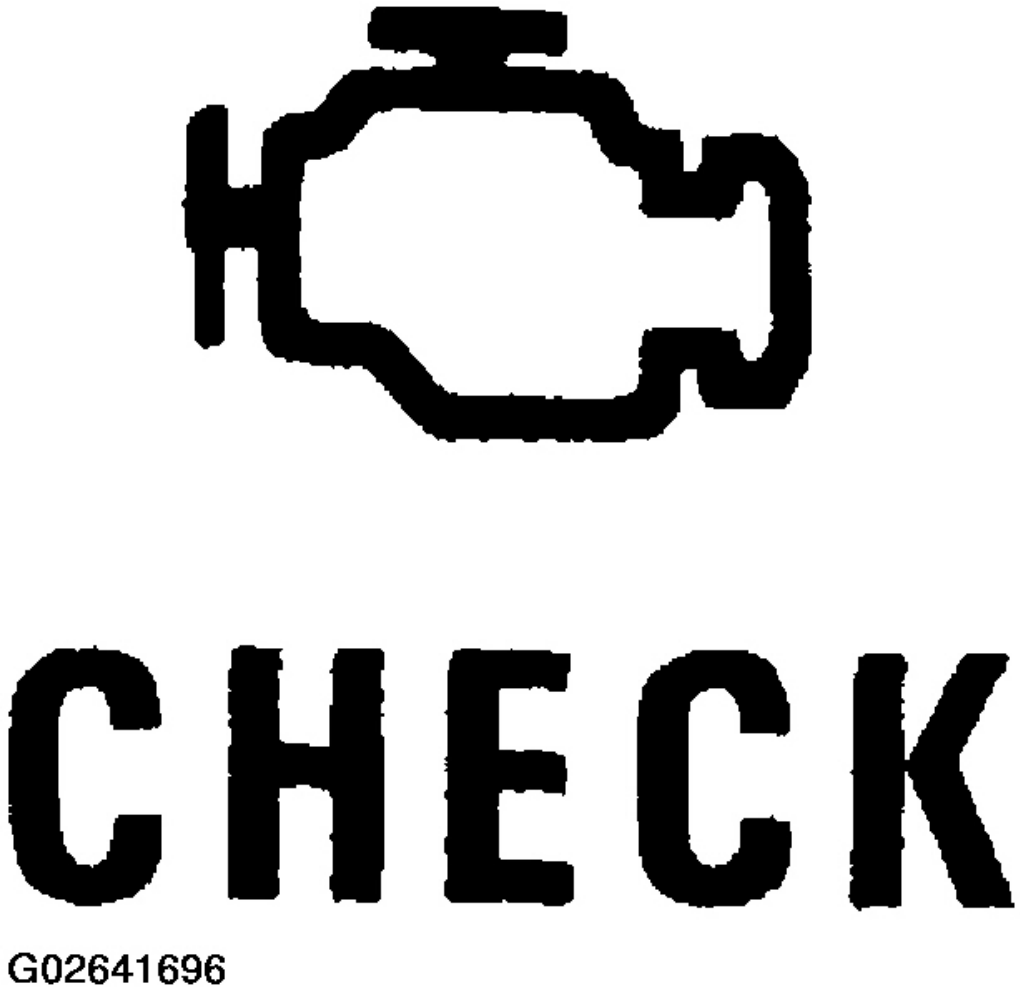

Fig. 3: Identifying Malfunction Indicator Lamp (MIL)
Courtesy of TOYOTA MOTOR SALES, U.S.A., INC.

- OBD II regulations require that the vehicle's on-board computer illuminates the Malfunction Indicator Lamp (MIL) on the instrument panel when the computer detects a malfunction in: 1) the emission control system/components, or 2) the powertrain control components (which affect vehicle emissions), or 3) the computer. In addition, the applicable Diagnostic Trouble Codes

cardiagn.com

(DTCs) prescribed by SAE J2012 are recorded in the ECM memory (see **DIAGNOSTIC TROUBLE CODE CHART**)

If the malfunction does not reoccur in 3 consecutive trips, the MIL turns off automatically but the DTCs remain recorded in the ECM memory.

- To check the DTC, connect the hand-held tester or OBD II scan tool to the Data Link Connector 3 (DLC3) on the vehicle. The hand-held tester or OBD II scan tool also enables you to erase the DTC and check the freeze frame data and various forms of engine data (for operating instructions, see the OBD II scan tool's instruction book). The DTC includes SAE controlled codes and manufacturer controlled codes. SAE controlled codes must be set as prescribed by the SAE, while manufacturer controlled codes can be set freely by a manufacturer within the prescribed limits (see the DTC chart on **DIAGNOSTIC TROUBLE CODE CHART**).

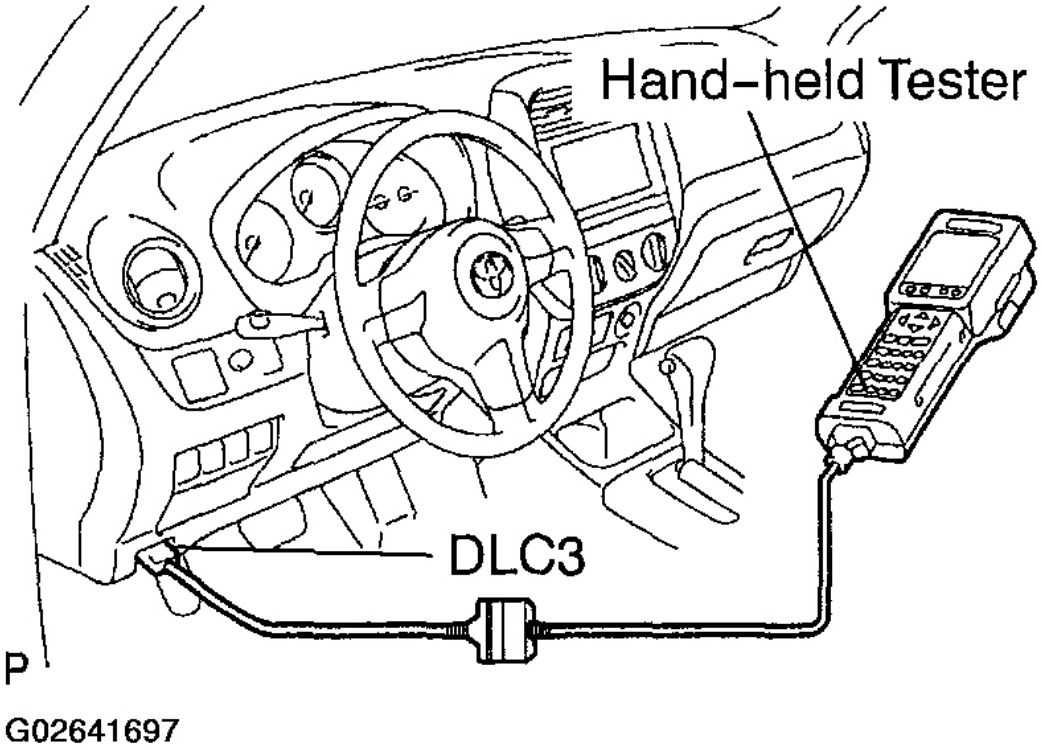

Fig. 4: Connecting Hand-Held Tester To Data Link Connector (DLC3)
Courtesy of TOYOTA MOTOR SALES, U.S.A., INC.

- The diagnosis system operates in "normal mode" during normal vehicle use. In "normal mode", 2 trip detection logic* is used to ensure accurate detection of malfunctions. A "check mode" is also available to technicians as an option. In "check mode", 1 trip detection logic is used for simulating malfunction symptoms and increasing the system's ability to detect malfunctions, including

cardiagn.com

intermittent malfunctions (hand-held tester only) (see step 5).

- *2 trip detection logic:

  When a malfunction is first detected, the malfunction is temporarily stored in the ECM memory (1st trip). If the ignition switch is turned OFF and then ON again, and the same malfunction is detected again, the MIL will illuminate (2nd trip).

- Freeze frame data:

  The freeze frame data records the engine conditions (fuel system, calculated load, engine coolant temperature, fuel trim, engine speed, vehicle speed, etc.) when a malfunction is detected. When troubleshooting, freeze frame data can help determine if the vehicle was running or stopped, if the engine was warmed up or not, if the air-fuel ratio was lean or rich, and other data from the time the malfunction occurred.

Priorities for troubleshooting:

When multiple DTCs occur, find out the order in which the DTCs should be inspected by checking the component's DTC chart. If no instructions are written in the DTC chart, check DTCs in the following order of priority:

1. DTCs other than fuel trim malfunction (DTC P0171, P0172) and misfire (DTC P0300 - P0304).
2. Fuel trim malfunction (DTC P0171, P0172).
3. Misfire (DTC P0300 - P0304).

2. **CHECK DLC3**

The vehicle's ECM uses the ISO 9141-2 for communication protocol. The terminal arrangement of the DLC3 complies with SAE J1962 and matches the ISO 9141-2 format.

cardiagn.com

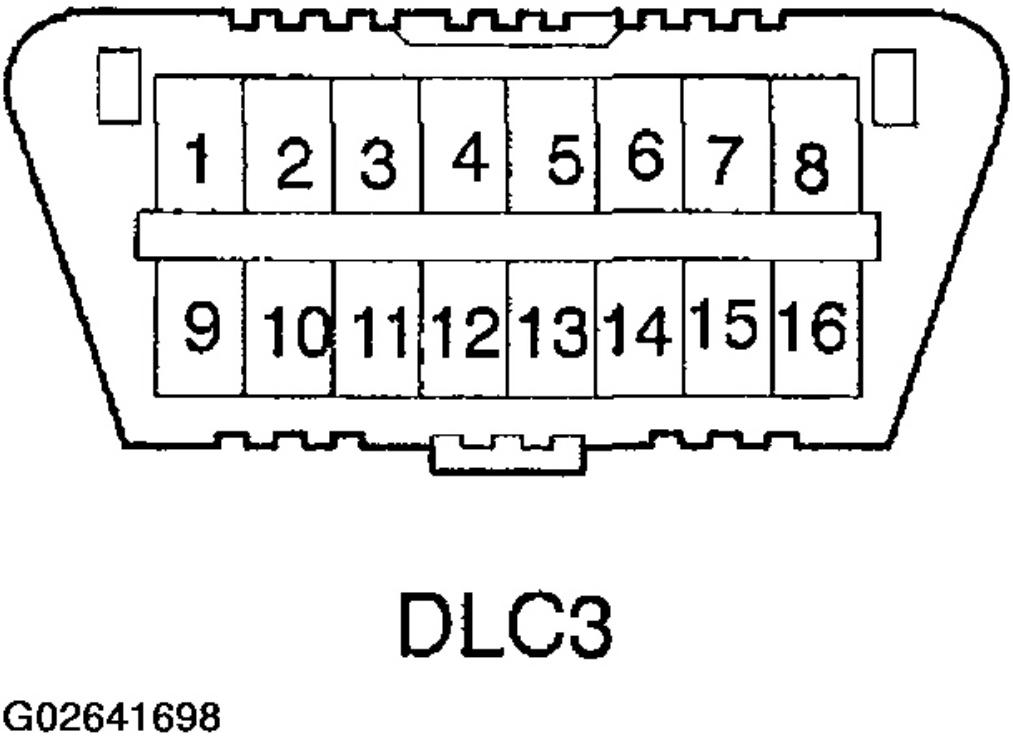

Fig. 5: Identifying DLC3 Connector Terminals
Courtesy of TOYOTA MOTOR SALES, U.S.A., INC.

Tester Connection	Condition	Specified Condition
7 (Bus + line) – 5 (Signal ground)	During communication	Pulse generation
4 (Chassis ground) – Body ground	Constant	Below 1 Ω
5 (Signal ground) – Body ground	Constant	
16 (B+) – Body ground	Constant	9 to 14 V

G02641699

Fig. 6: DLC3 Connector Terminals Resistance & Voltage Chart
Courtesy of TOYOTA MOTOR SALES, U.S.A., INC.

HINT:

Connect the cable of the hand-held tester or the OBD II scan tool to the DLC3, turn the ignition switch ON and attempt to use the hand-held tester or the OBD II scan tool. If the screen displays UNABLE TO CONNECT TO VEHICLE, a problem exists in the vehicle side or the tester side.

cardiagn.com

- If the communication is normal when the tool is connected to another vehicle, inspect the DLC3 on the original vehicle.
- If communication is still impossible when the tool is connected to another vehicle, the problem is probably in the tool itself, so consult the Service Department listed in the tool's instruction manual.

3. **INSPECT BATTERY VOLTAGE**

   Battery voltage: 11 to 14 V

   If the voltage is below 11 V, recharge the battery before proceeding.

4. **CHECK MIL**
   a. The MIL turns on when the ignition switch is turned ON and the engine is not running.

      HINT:

      If the MIL is not illuminated, troubleshoot the MIL circuit (see **MIL CIRCUIT MALFUNCTION**).

   b. When the engine is started, the MIL should turn off. If the lamp remains on, it means that the diagnosis system has detected a malfunction or abnormality in the system.

5. **DTC CHECK (Normal Mode)**

   NOTE:
   - **If there is no DTC in the normal mode, check the pending fault code using the Continuous Test Results function (Mode 7 for SAE J1979) on the OBD II scan tool or the hand-held tester.**
   - **Hand-held tester only:**

     When the diagnosis system is switched from the normal mode to the check mode, all the DTCs and freeze frame data recorded in the normal mode will be erased. So before switching modes, always check the DTCs and freeze frame data, and then write them down.

   a. Checking DTCs using the hand-held tester or OBD II scan tool.
      1. Connect the hand-held tester or the OBD II scan tool to DLC3. (See **Fig. 4**).
      2. Turn the ignition switch ON.
      3. Use the hand-held tester or the OBD II scan tool to check the DTCs and freeze frame data and then write them down.

         For the hand-held tester, enter the following menus: DIAGNOSIS / ENHANCED OBD II / DTC INFO / CURRENT CODES. For the OBD II scan tool, see its instruction manual.

      4. See **DIAGNOSTIC TROUBLE CODE CHART** to confirm the details of the DTCs.

   NOTE: **When simulating a symptom with the OBD II scan tool (excluding**

cardiagn.com

hand-held tester) to check for DTCs, use the normal mode. For DTCs subject to "2 trip detection logic", perform either of the following actions.

- **Turn the ignition switch OFF after the symptom is simulated once. Then repeat the simulation process again. When the problem has been simulated twice, the MIL lights up and the DTCs are recorded in the ECM.**
- **Check the pending fault code using the Continuous Test Results function (Mode 7 for SAE J1979) on the OBD II scan tool.**

b. Clearing the DTCs using the hand-held tester or the OBD II scan tool.
   1. Connect the hand-held tester or the OBD II scan tool to the DLC3.
   2. Turn the ignition switch ON.
   3. Erase DTCs and freeze frame data using the hand-held tester or the OBD II scan tool (complying with SAE J1978).

      For the hand-held tester: 1) enter the following menus: DIAGNOSIS / ENHANCED OBD II / DTC INFO / CLEAR CODES; and 2) press YES. For the OBD II scan tool, see its instruction manual.

c. Clearing the DTCs without using the hand-held tester or the OBD II scan tool.
   1. Remove the EFI1 fuse from the engine room J/B and ETCS fuse from the engine room R/B for more than 60 seconds. Or, disconnect the battery terminal for more than 60 seconds.

      After disconnecting the battery terminal, perform the "INITIALIZE" procedure (see **PRE-CHECK**).

cardiagn.com

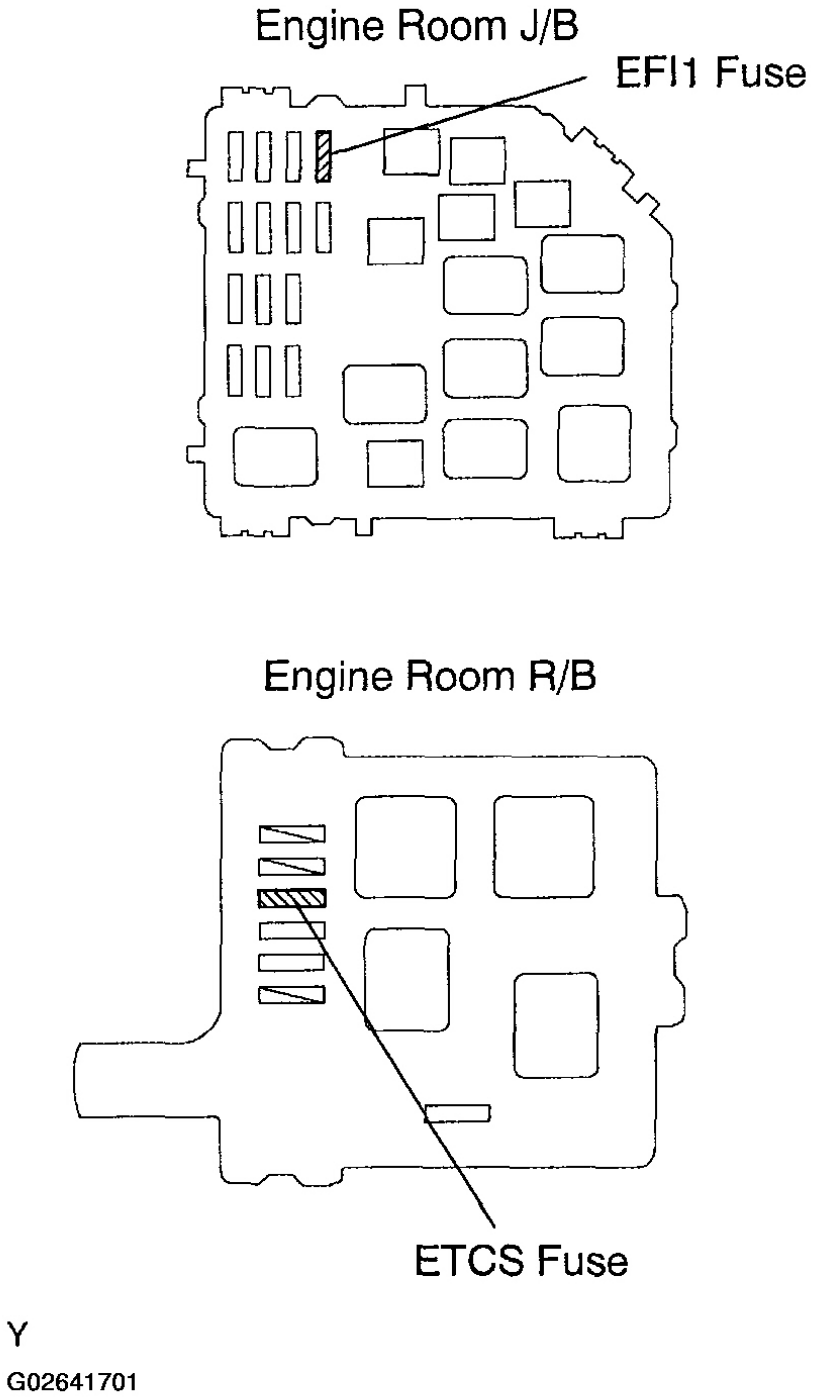

Fig. 7: Identifying EFI1 Fuse & ETCS Fuse
Courtesy of TOYOTA MOTOR SALES, U.S.A., INC.

6. **DTC CHECK (Check Mode)**

cardiagn.com

HINT:

Hand-held tester only:

Check mode has a higher sensitivity to detect malfunctions and can detect malfunctions that normal mode cannot detect. Check mode can also detect all the malfunctions that normal mode can detect.

a. Procedure for Check Mode using the hand-held tester.
   1. Make sure that the items below are true:
      - Battery positive voltage 11 V or more.
      - Throttle valve fully closed.
      - Transmission in the P or N position.
      - A/C switched OFF.
   2. Turn the ignition switch OFF.
   3. Connect the hand-held tester to the DLC3. (See **Fig. 4**).
   4. Turn the ignition switch ON.
   5. Change the ECM to check mode with the hand-held tester. Enter the following menus: DIAGNOSIS / ENHANCED OBD II / CHECK MODE. Make sure the MIL flashes as shown (see **Fig. 8**).

NOTE: **All DTCs and freeze frame data recorded will be erased if: 1) the hand-held tester is used to change the ECM from normal mode to check mode or vice-versa; or 2) during check mode, the ignition switch is turned from ON to ACC or OFF.**

cardiagn.com

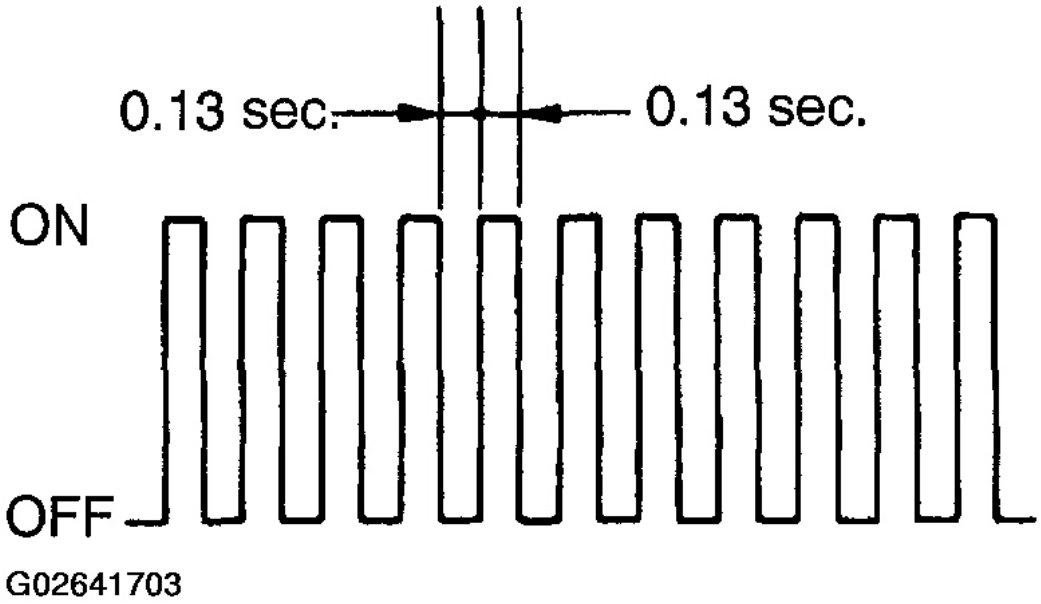

Fig. 8: Identifying MIL Flashes
Courtesy of TOYOTA MOTOR SALES, U.S.A., INC.

6. Start the engine. The MIL should turn off after the engine starts.
7. Simulate the conditions of the malfunction described by the customer.
8. After simulating the malfunction conditions, use the hand-held tester diagnosis selector to check the DTC, freeze frame data and other data.
   - After checking the DTC, inspect the applicable circuit.

b. Clearing the DTCs using the hand-held tester or the OBD II scan tool.
   1. Connect the hand-held tester or the OBD II scan tool to the DLC3.
   2. Turn the ignition switch ON.
   3. Erase DTCs and freeze frame data with the hand-held tester or the OBD II scan tool (complying with SAE J1978)

      For the hand-held tester: 1) enter the following menus: DIAGNOSIS / ENHANCED OBD II / DTC INFO / CLEAR CODES; and 2) press YES. For the OBD II scan tool, see its instruction manual.

c. Clearing the DTCs not using the hand-held tester or the OBD II scan tool.
   1. Remove the EFI1 fuse from the engine room J/B and ETCS fuse from the engine room R/B for more than 60 seconds (See **Fig. 7**). Or, disconnect the battery terminal for more than 60 seconds. After disconnecting the battery terminal, perform the "INITIALIZE" procedure (see **PRE-CHECK**).

cardiagn.com

7. **FAIL-SAFE CHART**

If any of the following codes are recorded, the ECM enters the fail-safe mode.

DTC No.	Fail-Safe Operation	Fail-Safe Deactivation Conditions
P0031 P0032 P0037 P0038	Turn off heater	Ignition switch OFF
P0100 P0102 P0103	Ignition timing is calculated from engine speed and a throttle angle	Returned to normal condition
P0110 P0112 P0113	Intake air temperature is fixed at 20°C (68°F)	Returned to normal condition
P0115 P0117 P0118	Engine coolant temperature is fixed at 80°(176°F)	Returned to normal condition
P0120 P0121 P0122 P0123 P0220 P0222 P0223 P0604 P0606 P0607 P0657 P2102 P2103 P2111 P2112 P2118 P2119 P2135	If Electronic Throttle Control System (ETCS) has malfunction, ECM cuts off current to throttle control motor. Throttle control valve returns to predetermined opening angle (approximately 16°) by force of return spring. ECM then adjusts engine output by controlling fuel injection (intermittent fuel-cut) and ignition timing in accordance with accelerator pedal opening angle to enable vehicle to continue at minimal speed. If accelerator pedal is depressed firmly and slowly, vehicle can be driven slowly. If accelerator pedal is depressed quickly, vehicle may speed up and slow down erratically.	"Pass" condition is detected and then ignition switch is turned OFF, fail-safe operation will stop and system will return to normal condition.
P0327 P0328	Maximum timing retardation	Ignition switch OFF
P0351 P0352 P0353 P0354	Fuel cut	IGF signal is detected for 2 consecutive ignitions
P2120 P2121 P2122 P2123 P2125 P2127 P2128 P2138	Accelerator pedal position sensor has 2 (main and sub) sensor circuits. If malfunction occurs in either of sensor circuits, ECM detects abnormal signal voltage difference between 2 sensor circuits and switches to fail-safe mode. In fail-safe mode, remaining circuit is used to calculate accelerator pedal opening to allow vehicle to continue driving. If both circuits malfunction, ECM regards opening angle of accelerator pedal to be fully closed. In this case, throttle valve will remain closed as if engine is idling.	"Pass" condition is detected and then ignition switch is turned OFF, fail-safe operation will stop and system will return to normal condition.

G02641705

Fig. 9: Fail-Safe Chart
Courtesy of TOYOTA MOTOR SALES, U.S.A., INC.

8. **CHECK FOR INTERMITTENT PROBLEMS**

cardiagn.com

Hand-held tester only:

Inspect the vehicle's ECM using check mode. Intermittent problems are easier to detect when the ECM is in check mode with the hand-held tester. In check mode, the ECM uses 1 trip detection logic, which has a higher sensitivity to malfunctions than normal mode (default), which uses 2 trip detection logic.

a. Clear the DTCs (see step 5).
b. Set the check mode (see step 6).
c. Perform a simulation test (see **HOW TO PROCEED WITH TROUBLESHOOTING**).
d. Check the connector and terminal (see **HOW TO USE THE DIAGNOSTIC CHART AND INSPECTION PROCEDURE**).
e. Wiggle the harness and connector (see **HOW TO USE THE DIAGNOSTIC CHART AND INSPECTION PROCEDURE**).

9. **BASIC INSPECTION**

When the malfunction is not confirmed in the DTC check, troubleshooting should be carried out in all the possible circuits considered as causes of the problem. In many cases, by carrying out the basic engine check shown in the following flow chart, the location causing the problem can be found quickly and efficiently. Therefore, using this check is essential in the engine troubleshooting.

1. **Is battery positive voltage 11 V or more when engine stopped?**

   NO: Charge or replace battery.

   YES: Go To Next Step.
2. **Is engine cranked?**

   NO: Proceed to STARTING SYSTEM and continue to troubleshoot.

   YES: Go To Next Step.
3. **Does engine start?**

   NO: Go to step 6.

   YES: Go To Next Step.
4. **Check air filter.**

   PREPARATION:

   Remove the air filter.

   CHECK:

   Visually check if air filter is contaminated with dirty or oily.

   NG: Repair or replace.

   OK: Go To Next Step.
5. **Check idle speed.**

cardiagn.com

PREPARATION:

a. Warm up the engine to the normal operating temperature.
b. Switch off all the accessories.
c. Switch off the A/C.
d. Shift the transmission into the N position.
e. Connect the hand-held tester or OBD II scan tool to the DLC3 of the vehicle.

CHECK

Use CURRENT DATA to check the idle speed.

OK:

Idle speed:

M/T: 650 to 750 RPM

A/T: 550 to 750 RPM

NG: Proceed to problem symptoms table on PROBLEM SYMPTOMS TABLE.
OK: Go To Next Step.

6. **Check fuel pressure (see FUEL PUMP).**
   NG: Proceed to FUEL PUMP and continue to troubleshoot.
   OK: Go To Next Step.
7. **Check for spark.**

PREPARATION

a. Disconnect the ignition coil.
b. Remove the spark plug.
c. Install the spark plug to the ignition coil assembly.
d. Disconnect the injector connector.
e. Ground the spark plug.

CHECK:

Check if spark occurs while the engine is being cranked.

NOTE:

- **Do not crash the electrode gap.**
- **To prevent the injectors from injecting excess fuel during this test, do not crank the engine for more than 5 seconds at one**

cardiagn.com

time.

NG: Proceed to IGNITION SYSTEM and continue to troubleshoot.

OK: Proceed to problem symptoms table on PROBLEM SYMPTOMS TABLE.

10. **DATA LIST**

HINT:

Using the hand-held tester DATA LIST allows switch, sensor, actuator and other item values to be read without removing any parts. Reading the DATA LIST early in troubleshooting is one way to shorten labor time.

NOTE: In the table below, the values listed under "Normal Condition" are reference values. Do not depend solely on the these reference values when deciding whether a part is faulty or not.

a. Warm up the engine.
b. Turn the ignition switch OFF.
c. Connect the hand-held tester or the OBD II scan tool to the DLC3.
d. Turn the ignition switch ON.
e. Push the "ON" button of the hand-held tester or the OBD II scan tool.
f. Enter the following menus: DIAGNOSIS / ENHANCED OBD II / DATA LIST.
g. According to the display on tester, read the "DATA LIST".

cardiagn.com

Hand-held Tester Display	Measurement Item/Range (Display)	Normal Condition*	Diagnostic Note
INJECTOR	Injection period/ Min: 0 ms, Max: 32.64 ms	Idling: 1.92 to 3.37 ms	–
IGN ADVANCE	Ignition timing advance/ Min: –64 deg., Max: 63.5 deg.	Idling: BTDC 5 to 15 deg.	–
CALC LOAD	Calculated load by ECM/ Min: 0 %, Max: 100 %	Idling: 3.3 to 26.7 % Running without load (2,500 rpm): 12.0 to 14.7 %	–
MAF	Air flow rate from MAF meter/ Min: 0 gm/s, Max: 655 gm/s	• Idling: M/T 0.54 to 4.33 gm/second A/T 0.58 to 4.67 gm/second • Racing without load (2,500 rpm): 3.33 to 9.17 gm/s	If the value is approximately 0.0 gm/s: • Mass air flow meter power source circuit open • VG circuit open or short If the value is 160.0 gm/s or more: • EVG circuit open
ENGINE SPD	Engine speed/ Min: 0 rpm, Max: 16,383 rpm	• Idling: M/T 650 to 750 rpm A/T 550 to 750 rpm	–
COOLANT TEMP	Coolant temperature/ Min: –40 °C, Max: 140°C	After warming up: 80 to 95˚C (176 to 203˚F)	• If value is –40°C (–40°F): sensor circuit is open • If value is 140°C (284°F) or more: sensor circuit is shorted
INTAKE AIR	Intake air temperature/ Min: –40°C, Max: 140 °C	Equivalent to ambient temp. (after cold soak)	• If value is –40°C (–40°F): sensor circuit is open • If value is 140°C (284°F) or more: sensor circuit is shorted
THROTTLE POS	Absolute throttle position sensor/ Min: 0 %, Max: 100 %	• Throttle fully closed: 6 to 16 % • Throttle fully open: 64 to 98 %	Read value with ignition switch ON (do not start engine)
VEHICLE SPD	Vehicle speed/ Min: 0 km/h Max: 255 km/h	Vehicle stopped: 0 km/h (0 mph)	Speed indicated on speedometer
ACCEL POS #1	Accelerator pedal position sensor No.1 output voltage/ Min: 0 V, Max: 5 V	• Accelerator released: 0.5 to 1.1 V • Accelerator depressed: 2.5 to 4.5 V	Read value with ignition switch ON (do not start engine)
ACCEL POS #2	Accelerator pedal position sensor No. 2 output voltage/ Min: 0 V, Max: 5 V	• Accelerator released: 1.2 to 2.0 V • Accelerator depressed: 3.4 to 5.3 V	Read value with ignition switch ON (do not start engine)

G02641706

Fig. 10: Hand Held Tester Display Data List (1 Of 4)
Courtesy of TOYOTA MOTOR SALES, U.S.A., INC.

cardiagn.com

THROTTLE POS #2	Throttle position sensor No. 2 output voltage/ Min: 0 V, Max: 5 V	• Throttle fully closed: 2.1 to 3.1 V • Throttle fully open: 4.5 to 5.5 V	Read value with ignition switch ON (do not start engine)
THROTTLE TARGT	Target position of throttle valve/ Min: 0 V, Max: 5 V	Idling: 0.4 to 1.1 V	Read value with ignition switch ON (do not start engine)
THROTTLE OPN DUTY	Throttle actuator opening duty ratio/ Min: 0 %, Max: 100 %	Throttle fully closed: 0 %	• When accelerator pedal is depressed, duty ratio is increased • Read value with ignition switch ON (do not start engine)
THROTTLE CLS DUTY	Throttle actuator closed duty ratio/ Min: 0 %, Max: 100 %	Throttle fully open: 0 %	• When accelerator pedal is quickly released, duty ratio is increased • Read the value with ignition switch ON (do not start engine)
THROTTLE MOT	Whether or not throttle actuator control is permitted/ ON or OFF	Idling: ON	Read value with ignition switch ON (do not start engine)
+BM	Whether or not electric throttle control system power is input/ ON or OFF	Idling: ON	–
VAPOR PRESS	Vapor pressure/ Min.: –4.125 kPa, Max.: 2.125 kPa	Fuel tank cap removed: 0 kPa	Pressure inside of fuel tank as read by vapor pressure sensor
O2S B1 S2	Oxygen sensor output voltage of bank 1 sensor 2/ Min: 0 V, Max: 1.275 V	Idling: 0.1 to 0.9 V	Performing INJ VOL or A/F CONTROL function of ACTIVE TEST enables technician to check voltage output of each sensor
AFS B1 S1	A/F sensor output voltage of bank 1 sensor 1/ Min: 0 V, Max: 7.999 V	Idling 2.8 to 3.8 V	Performing INJ VOL or A/F CONTROL function of ACTIVE TEST enables technician to check voltage output of each sensor
ACCEL IDL POS	Whether or not accelerator pedal position sensor is detecting idle/ ON or OFF	Idling: ON	–
THROTTLE IDL POS	Whether or not throttle position sensor is detecting idle/ ON or OFF	Idling: ON	–
FAIL #1	Whether or not fail–safe function is executed/ ON or OFF	ETCS has failed: ON	–
FAIL #2	Whether or not fail–safe function is executed/ ON or OFF	ETCS has failed: ON	–
THROTTLE INITIAL	Throttle fully closed (learned value) Min.: 0 V, Max.: 5 V	0.5 to 0.9 V	–
ACCEL LEARN VAL	Accelerator fully closed (learned value) Min.: 0 V, Max.: 5 V	0.4 to 0.8 V	–
THROTTLE MOT	Throttle motor current Min.: 0 A, Max.: 20 A	Idling: 0 to 3.0 A	–
SHORT FT #1	Short term fuel trim of bank 1/ Min: –100 %, Max: 100 %	0 ± 20 %	This item is short–term fuel compensation used to maintain air–fuel ratio at stoichiometric air–fuel ratio
LONG FT #1	Long term fuel trim of bank 1/ Min: –100 %, Max: 100 %	0 ± 20 %	This item is overall, long–term fuel compensation that helps to maintain air–fuel ratio at stoichiometric air fuel ratio (steadies long term deviations of short–term fuel trim from central value).

G02641707

Fig. 11: Hand Held Tester Display Data List (2 Of 4)
Courtesy of TOYOTA MOTOR SALES, U.S.A., INC.

cardiagn.com

TOTAL FT #1	Total fuel trim of bank 1: Min: 0.5, Max: 1.496	Idling: 0.5 to 1.4	–
AF FT B1 S1	Short term fuel trim associated with bank 1 sensor 1/ Min: 0, Max: 1.999	• Value less than 1 (0.000 to 0.999) = LEAN • Stoichiometric Air–Fuel Ratio=1 • Value greater than 1 (1.001 to 1.999) = RICH	–
FUEL SYS #1	Fuel system status (Bank1) / OL or CL or OL DRIVE or OL FAULT or CL FAULT	Idling after warming up: CL	• OL (Open Loop) : Has not yet satisfied conditions to go closed loop • CL (Closed Loop) : Using heated oxygen sensor(s) as feedback for fuel control • OL DRIVE: Open loop due to driving conditions (fuel enrichment) • OL FAULT: Open loop due to detected system fault • CL FAULT: Closed loop but one of heated oxygen sensors, which is used for fuel control, is malfunctioning
FC IDL	Fuel cut idle/ ON or OFF	Fuel cut operation: ON	FC IDL = ON when throttle valve is fully closed and engine speed is over 1,500 rpm
MIL	MIL status/ ON or OFF	MIL ON: ON	–
STARTER SIG	Starter signal/ ON or OFF	Cranking: ON	–
A/C SIG	A/C signal/ ON or OFF	A/C ON: ON	–
PNP SW [NSW]	Park/neutral position switch signal/ ON or OFF	P or N position: ON	–
ELECT LOAD SIG	Electrical load signal/ ON or OFF	Defogger switch ON: ON	–
STOP LIGHT SW	Stop light switch/ ON or OFF	• Brake pedal depressed: ON • Brake pedal released: OFF	–
PS OIL PRESS SW	Power steering signal/ ON or OFF	• While turning steering wheel: ON • While not turning steering wheel: OFF	Idle–up control is performed when PS is ON
PS SIGNAL	Power steering signal/ ON or OFF	When steering wheel is turned	This signal is usually ON until ignition switch is turned OFF
FUEL PUMP / SPD	Fuel pump / speed status / ON/H or OFF/M,L	Idling: ON	–
A/C MAG CLUTCH	A/C magnet clutch status/ ON or OFF	A/C magnet clutch ON: ON	–
EVAP VSV	EVAP VSV status control/ ON or OFF	VSV operating: ON	EVAP VSV is controlled by ECM (ground side duty control)
VVT CTRL B1	VVT control status (bank 1) ON or OFF	VVT system operation: ON	–
IGNITION	Ignition counter/ Min: 0, Max: 400	0 to 400	–
CYL #1, #2, #3, #4	Misfire ratio of cylinder 1 / Min: 0 %, Max: 50 %	0 %	This item is displayed in only idling
MISFIRE LOAD	Engine load for first misfire range/ Min.: 0 g/rev, Max.: 3.98 g/rev.	Misfire 0: 0 g/rev.	–
MISFIRE RPM	Engine RPM for first misfire range/ Min.: 0 rpm, Max.: 6,375 rpm	Misfire 0: 0 rpm	–

G02641708

Fig. 12: Hand Held Tester Display Data List (3 Of 4)
Courtesy of TOYOTA MOTOR SALES, U.S.A., INC.

cardiagn.com

FC TAU	Fuel Cut TAU: Fuel cut during very light load/ ON or OFF	Fuel cut operating: ON	Fuel cut is being performed under very light load to prevent engine combustion from becoming incomplete
CHECK MODE	Check mode/ ON or OFF	Check mode ON: ON	See step 6

*: If no conditions are specifically stated for "Idling", the shift lever is in the N or P position, the A/C switch is OFF and all accessory switches are OFF.

G02641709

Fig. 13: Hand Held Tester Display Data List (4 Of 4)
Courtesy of TOYOTA MOTOR SALES, U.S.A., INC.

11. **ACTIVE TEST**

HINT:

Performing the hand-held tester ACTIVE TEST allows relay, VSV, actuator and other items to be operated without removing any parts. Performing the ACTIVE TEST early in troubleshooting is one way to shorten labor time. The DATA LIST can be displayed during the ACTIVE TEST.

a. Warm up the engine.
b. Turn the ignition switch OFF.
c. Connect the hand-held tester or the OBD II scan tool to the DLC3.
d. Turn the ignition switch ON.
e. Turn ON the hand-held tester or the OBD II scan tool.
f. Enter the following menus: DIAGNOSIS / ENHANCED OBD II / ACTIVE TEST.
g. According to the display on tester, perform the ACTIVE TEST.

cardiagn.com

Hand-held Tester Display	Test Details	Diagnostic Note
INJ VOL	[Test Details] Control injection volume Min.: −12.5 %, Max.: 25 % [Vehicle Condition] Engine speed: 3,000 rpm or less	• All injectors are tested at once • Injector volume is gradually changed between −12.5 and 25 %
A/F CONTROL	[Test Details] Control injection volume −12.5 or 25 % (Change the injection volume −12.5 % or 25 %) [Vehicle Condition] Engine speed: 3,000 rpm or less	Following A/F CONTROL procedure enables technician to check and graph voltage outputs of both A/F sensor and heated oxygen sensor For displaying graph, enter "ACTIVE TEST / A/F CONTROL / USER DATA", select "AFS B1S1 and O2S B1S2" by pressing "YES" and push "ENTER", Then press "F4".
EVAP (PURGE) VSV	Activate EVAP VSV (Purge) control ON or OFF	–
A/C MAG CLUTCH	[Test Details] Control A/C magnet clutch ON or OFF	–
FUEL PUMP / SPD	[Test Details] Control fuel pump ON or OFF	–
VVT CTRL B1	[Test Details] Active VVT system (Bank 1) ON or OFF	• ON: Rough idle or engine stall • OFF: Normal engine speed
TC/TE1	[Test Details] Connect TC and TE1 ON or OFF	–
FC IDL PROHBT	[Test Details] Control idle fuel cut prohibit ON or OFF	–
CAN CTRL VSV	[Test Details] Activate the VSV for canister control. ON or OFF	–
TANK BYPASS VSV	[Test Details] Activate the VSV for tank bypass. ON or OFF	–

G02641710

Fig. 14: Active Test Chart
Courtesy of TOYOTA MOTOR SALES, U.S.A., INC.

12. **DEFINITION OF TERMS**

DEFINITION OF TERMS

Term	Definition
Monitor description	Description of what the ECM monitors and how it detects malfunctions (monitoring purpose and its details).
Related DTCs	Diagnostic code
Typical enabling condition	Preconditions that allow the ECM to detect malfunctions. With all preconditions satisfied, the ECM sets the DTC when the monitored value(s) exceeds the malfunction threshold(s).

cardiagn.com

Sequence of operation	The priority order that is applied to monitoring, if multiple sensors and components are used to detect the malfunction. While another sensor is being monitored, the next sensor or component will not be monitored until the previous monitoring has concluded.
Required sensor/components	The sensors and components that are used by the ECM to detect malfunctions.
Frequency of operation	The number of times that the ECM checks for malfunctions per driving cycle. "Once per driving cycle" means that the ECM detects malfunction only one time during a single driving cycle. "Continuous" means that the ECM detects malfunction every time when enabling condition is met.
Duration	The minimum time that the ECM must sense a continuous deviation in the monitored value(s) before setting a DTC. This timing begins after the "typical enabling conditions" are met.
Malfunction thresholds	Beyond this value, the ECM will conclude that there is a malfunction and set a DTC.
MIL operation	MIL illumination timing after a defect is detected.
MIL operation	`Immediate" means that the ECM illuminates MIL the instant the ECM determines that there is a malfunction.
MIL operation	`2 driving cycles" means that the ECM illuminates MIL if the same malfunction is detected again in the 2nd driving cycle.

13. **TOYOTA/LEXUS PART AND SYSTEM NAME LIST**

This reference list indicates the part names used in this manual along with their definitions.

TOYOTA/LEXUS PART AND SYSTEM NAME LIST

TOYOTA/LEXUS Name	Definition
Toyota HCAC system, Hydro-carbon Adsorptive Catalyst (HCAC) system, HC adsorptive three-way catalyst	HC adsorptive three-way catalytic converter
Variable valve timing sensor, VVT sensor	Camshaft position sensor
Variable valve timing system, VVT system	Camshaft timing control system
Camshaft timing oil control valve, Oil control valve, OCV, VVT, VSV	Camshaft timing oil control valve
Variable timing and lift, VVTL	Camshaft timing and lift control
Crankshaft position sensor "A"	Crankshaft position sensor
Engine speed sensor	Crankshaft position sensor
THA	Intake air temperature
Knock control module	Engine knock control module
Knock sensor	Engine knock sensor
Mass or volume air flow circuit	Mass air flow sensor circuit
Vacuum sensor	Manifold air pressure sensor

cardiagn.com

Internal control module, Control module, Engine control ECU, PCM	Power train control module
FC idle	Deceleration fuel cut
Idle air control valve	Idle speed control

TOYOTA/LEXUS PART AND SYSTEM NAME LIST

CCV, Canister close valve VSV for canister control	**Evaporative emissions canister vent valve**
EVAP VSV, Vacuum switching valve assembly No. 1, EVAP VSV, Purge VSV	Evaporative emissions canister purge valve
Pressure switching valve, Bypass VSV	Evaporative emission pressure switching valve
Vapor pressure sensor, EVAP pressure sensor, Evaporative emission control system pressure sensor	Fuel tank pressure sensor
Charcoal canister	Evaporative emissions canister
ORVR system	On-board refueling vapor recovery system
Intake manifold runner control	Intake manifold tuning system
Intake manifold runner valve, IMRV, IACV (runner valve)	Intake manifold tuning valve
Intake control VSV	Intake manifold tuning solenoid valve
AFS	Air fuel ratio sensor
O2 sensor	Heater oxygen sensor
Oxygen sensor pumping current circuit	Oxygen sensor output signal
Oxygen sensor reference ground circuit	Oxygen sensor signal ground
Accel position sensor	Accelerator pedal position sensor
Throttle actuator control motor, Actuator control motor, Electronic throttle motor, Throttle control motor	Electronic throttle actuator
Electronic throttle control system, Throttle actuator control system	Electronic throttle control system
Throttle/pedal position sensor, Throttle/pedal position switch, Throttle position sensor/switch	Throttle position sensor
Turbo press sensor	Turbocharger pressure sensor
Turbo VSV	Turbocharger pressure control solenoid valve
P/S pressure switch	Power-steering pressure switch
VSV for ACM	Active control engine mount

14. **List of Disable a Monitor**

HINT:

This table indicates ECM monitoring status for the items in the upper columns if the DTCs in each line on the left are being set.

cardiagn.com

As for the "X" make, when the DTC on the left is stored detection of the DTC in the upper column is not performed.

Monitor detected malfunction			Monitor disablement (X - disabled)																									
Fault code			P0010,P0020	P0011	P0012	P0016,P0018	P0021	P0022	P0030,50	P0135,P0155	P0036,56	P0043,44,63,64	P0100	P0101	P0105	P0106	P0110	P0115	P0116	P0120,P0121	P0125	P0128	P0130-P0153	P0134,P0154	P0136,P0156	P0142,P0162	P0171,P0172	P0300-P0308
	Fault code		P0010,P0020	P0011	P0012	P0016,P0018	P0021	P0022	P0031,32,51,52	P0031,32,51,52	P0037,38,57,58	P0043,44,63,64	P0100-P0103	P0101	P0105-P0108	P0106	P0110-P0113	P0115-P0118	P0116	P0120-P0223,P2135	P0125	P0128	P0130-P0153	P0134,P0154	P0136,P0156	P0142,P0162	P0171,P0172	P0300-P0308
		Component/ system	VVT VSV1,2	VVT System1 -Advance	VVT System1 - Retard	VVT System - Misalignment	VVT System2 - Advance	VVT System2 - Retard	O2 Sensor Heater - Sensor1	A/F Sensor Heater - Sensor1	O2 Sensor Heater - Sensor2	O2 Sensor Heater - Sensor3	MAF sensor	MAF sensor	MAP sensor	MAP sensor	IAT sensor	ECT sensor	ECT sensor	TP sensor	Insufficient ECT for Closed Loop	Thermostat	O2 Sensor -Sensor1	O2 Sensor, A/F Sensor(No Activity) - Sensor1	O2 Sensor - Sensor2	O2 Sensor - Sensor3	Fuel system	Misfire
P0010,P0020	P0010,P0020	VVT VSV1,2																				X					X	
P0011	P0011	VVT System1 - Advance				X		X														X					X	
P0012	P0012	VVT System1 - Retard				X		X														X					X	
P0016,P0018	P0016,P0018	VVT System - Misalignment																										
P0021	P0021	VVT System2 - Advance			X	X																X					X	
P0022	P0022	VVT System2 - Retard			X																	X					X	
P0030,50	P0031,32,51,52	O2 Sensor Heater - Sensor1																				X	X	X	X	X	X	
P0135,P0155	P0031,32,51,52	A/F Sensor Heater - Sensor1																				X			X	X	X	
P0036,56	P0037,38,57,58	O2 Sensor Heater - Sensor2																							X	X		
P0043,44,63,64	P0043,44,63,64	O2 Sensor Heater - Sensor3																								X		
P0100,P0101	P0100-P0103	MAF sensor		X	X		X	X											X		X	X	X	X	X	X	X	X
P0105,P0106	P0105-P0108	MAP sensor		X	X		X	X											X		X	X	X	X	X	X	X	X
P0110	P0110-P0113	IAT sensor																			X	X	X	X	X	X		X
P0115,P0116	P0115-P0118	ECT sensor		X	X	X	X	X						X		X					X	X	X	X	X	X	X	X
P0120,P0121	P0120-P0223,P2135	TP sensor												X		X							X	X	X	X	X	X
P0125	P0125	Insufficient ECT for Closed Loop		X	X		X	X						X		X						X	X	X	X	X	X	X
P0128	P0128	Thermostat																										
P0130-P0153	P0130-P0153	O2 Sensor - Sensor1																				X		X	X	X		
P0134,P0154	P0134,P0154	O2 Sensor, A/F Sensor(No Activity) - Sensor1								X												X	X		X	X	X	
P0136,P0156	P0136,P0156	O2 Sensor - Sensor2																										
P0142,P0162	P0142,P0162	O2 Sensor - Sensor3																										
P0171,P0172	P0171,P0172	Fuel system																				X	X	X	X	X		
P0300-P0308	P0300-P0308	Misfire							X													X	X	X	X	X		
P0325,P0330	P0325-P0333	Knock sensor																										X
P0335	P0335	CKP sensor		X	X		X	X						X		X						X	X	X	X	X	X	X
P0340, P0341	P0340, P0341	CMP sensor		X	X		X	X						X		X						X	X	X	X	X	X	X
P0340-P0346	P0340-P0346	VVT sensor1,2																				X						
P0351-P0358	P0351-P0358	Ignitor		X	X		X	X														X						
P0385	P0385	CKP sensor 2												X		X						X	X	X	X	X	X	X
P0401	P0401	EGR system (closed)																				X					X	
P0402	P0402	EGR system (open)																				X	X	X	X	X	X	
P0405,P0409	P0405-P0409	Lift sensor																									X	
P0420,P0430	P0420,P0430	Catalyst																										
P0442-P0456	P0442-P0456	EVAP system																					X	X	X	X		
P0450,P0451	P0450-P0453	EVAP press sensor																										

C

G02641711

Fig. 15: ECM Monitoring Status Chart (1 Of 6)
Courtesy of TOYOTA MOTOR SALES, U.S.A., INC.

cardiagn.com

Monitor detected malfunction			Monitor disablement (X - disabled)																						
Fault code			P0010,P0020	P0011	P0012	P0016,P0018	P0021	P0022	P0030,50	P0135,P0155	P0036,56	P0043,44,63,64	P0100	P0101	P0105	P0106	P0110	P0115	P0116	P0120,P0121	P0125	P0128	P0130-P0153	P0134,P0154	P0136,P0156	P0142,P0162	P0171,P0172	P0300-P0308
	Fault code		P0010,P0020	P0011	P0012	P0016,P0018	P0021	P0022	P0031,32,51,52	P0031,32,51,52	P0037,38,57,58	P0043,44,63,64	P0100-P0103	P0101	P0105-P0108	P0106	P0110-P0113	P0115-P0118	P0116	P0120-P0223,P2135	P0125	P0128	P0130-P0153	P0134,P0154	P0136,P0156	P0142,P0162	P0171,P0172	P0300-P0308
		Component/ system	VVT VSV1,2	VVT System1 -Advance	VVT System1 - Retard	VVT System - Misalignment	VVT System2 - Advance	VVT System2 - Retard	O2 Sensor Heater - Sensor1	A/F Sensor Heater - Sensor1	O2 Sensor Heater - Sensor2	O2 Sensor Heater - Sensor3	MAF sensor	MAF sensor	MAP sensor	MAP sensor	IAT sensor	ECT sensor	ECT sensor	TP sensor	Insufficient ECT for Closed Loop	Thermostat	O2 Sensor -Sensor1	O2 Sensor, A/F Sensor(No Activity) - Sensor1	O2 Sensor - Sensor2	O2 Sensor - Sensor3	Fuel system	Misfire
P0500	P0500	VSS																				X	X	X	X	X	X	X
P0511	P0511	IAC valve																					X					
P0510	P0510	Idle switch												X		X						X	X		X	X	X	X
P0560	P0560	System Voltage																										
P0617	P0617	Starter signal																										
P0705	P0705	Shift lever position switch																										
P0710	P0710-P0713	Trans fluid temp sensor																										
P0720-P0793	P0720-P0793	Output speed sensor																										
P0715-P0717	P0715-P0717	Input speed sensor																										
P0724	P0724	Stop lamp switch																										
P0741-P0796	P0741-P0796	Trans solenoid (function)																										
P0748-P0798	P0748-P0799	Trans solenoid (range)																										
P0850	P0850	PNP switch																										X
P1010,P1020	P1010,P1020	VVTL																				X					X	
P1011,12(,21,22)	P1011,12(,21,22)	VVTL system1(,2)																				X					X	
P1126	P1126	Electronic magnet clutch																										
P1129	P1129	Electronic throttle system																										
P1430	P1430	HC adsorber ACT press sensor																										
P2004,6	P2004,6	Intake Manifold Runner Control																										
P2009,10	P2009,10	Intake Manifold Runner Control Circuit																										
P2014,16,17	P2014,16,17	Intake Manifold Runner Position Sensor																										
P2102,P2103	P2102,P2103	Throttle motor																										
P2120-P2138	P2120-P2138	Accel position sensor																										
P2196,P2198	P2196,P2198	A/F sensor (rationality)																				X			X	X		
P2226	P2226	BARO sensor																					X		X	X		
P2237,P2240	P2237,P2240	A/F sensor (open)																				X			X	X		
P2423,24	P2423,24	HC Adsorption Catalyst																										
P2430,2,3	P2430,2,3	AIR Pressure Sensor(Low/High)																										
P2431	P2431	AIR Pressure Sensor(Rationality)																										
P2440	P2440	AIR control valve stuck open																					X	X	X	X	X	
P2441	P2441	AIR control valve stuck close																					X	X	X	X	X	
P2444	P2444	AIP stuck On																					X	X	X	X	X	
P2445	P2445	AIP stuck Off																					X	X	X	X	X	
P2714-P2759	P2714-P2759	Trans solenoid(SLU-SLD)																										
P2A00,P2A03	P2A00,P2A03	A/F sensor (slow response)																				X			X	X		

C

G02641712

Fig. 16: ECM Monitoring Status Chart (2 Of 6)
Courtesy of TOYOTA MOTOR SALES, U.S.A., INC.

cardiagn.com

Monitor detected malfunction			Monitor disablement (X - disabled)																								
Fault code			P0325,P0330	P0335	P0340,P0341	P0340-P0346	P0351-P0358	P0385	P0401	P0402	P0405	P0409	P0420,P0430	P0440-P0446	P0450,P0451	P0500	P0500	P0500	P0511	P0510	P0560	P0617	P0705	P0710	P0720-P0793	P0715-P0717	P0724	P0741-P0796
	Fault code		P0325-P0333	P0335	P0340,P0341	P0340-P0346	P0351-P0358	P0385	P0401	P0402	P0405,P0406	P0409	P0420,P0430	P0440-P0446	P0450-P0453	P0500	P0500	P0500	P0511	P0510	P0560	P0617	P0705	P0710-P0713	P0720-P0793	P0715-P0717	P0724	P0741-P0796
		Component/ system	Knock sensor	CKP sensor	CMP sensor	VVT sensor1,2	Ignitor	CKP sensor 2	EGR system (closed)	EGR system (open)	EGR Lift sensor	EGR Lift sensor	Catalyst	EVAP system	EVAP press sensor	VSS(ECT2sensor)	VSS(ECT1sensor, non-ECT)	VSS(M/T)	IAC valve	Idle switch	System Voltage	Starter signal	Shift lever position switch	Trans fluid temp sensor	Output speed sensor	Input speed sensor	Stop lamp switch	Trans solenoid (function)*1
P0010,P0020	P0010,P0020	VVT VSV1,2																										X
P0011	P0011	VVT System1 - Advance							X	X			X	X					X									
P0012	P0012	VVT System1 - Retard							X	X			X	X					X									
P0016,P0018	P0016,P0018	VVT System - Misalignment																										
P0021	P0021	VVT System2 - Advance							X	X			X	X					X									
P0022	P0022	VVT System2 - Retard							X	X			X	X					X									
P0030,50	P0031,32,51,52	O2 Sensor Heater - Sensor1							X	X			X						X									X
P0135,P0155	P0031,32,51,52	A/F Sensor Heater - Sensor1							X	X			X						X									
P0036,56	P0037,38,57,58	O2 Sensor Heater - Sensor2											X															
P0043,44,63,64	P0043,44,63,64	O2 Sensor Heater - Sensor3																										
P0100,P0101	P0100-P0103	MAF sensor							X	X			X	X				X	X									X
P0105,P0106	P0105-P0108	MAP sensor							X	X			X	X				X	X									X
P0110	P0110-P0113	IAT sensor							X	X				X														X
P0115,P0116	P0115-P0118	ECT sensor							X	X		X	X	X				X	X									X
P0120,P0121	P0120-P0223,P2135	TP sensor							X	X			X	X			X		X									X
P0125	P0125	Insufficient ECT for Closed Loop							X	X		X	X	X				X	X									X
P0128	P0128	Thermostat																										
P0130-P0153	P0130-P0153	O2 Sensor - Sensor1							X	X			X	X					X									X
P0134,P0154	P0134,P0154	O2 Sensor, A/F Sensor(No Activity) - Sensor1							X	X			X						X									X
P0136,P0156	P0136,P0156	O2 Sensor - Sensor2											X															
P0142,P0162	P0142,P0162	O2 Sensor - Sensor3																										
P0171,P0172	P0171,P0172	Fuel system							X	X			X	X					X									X
P0300-P0308	P0300-P0308	Misfire											X	X					X									X
P0325,P0330	P0325-P0333	Knock sensor							X	X																		X
P0335	P0335	CKP sensor							X	X			X	X					X									X
P0340, P0341	P0340, P0341	CMP sensor							X	X			X	X					X									X
P0340-P0346	P0340-P0346	VVT sensor1,2																										
P0351-P0358	P0351-P0358	Ignitor							X	X			X	X					X									X
P0385	P0385	CKP sensor 2							X	X			X	X					X									
P0401	P0401	EGR system (closed)											X															X
P0402	P0402	EGR system (open)											X	X					X									X
P0405,P0409	P0405-P0409	Lift sensor																										
P0420,P0430	P0420,P0430	Catalyst																										
P0442-P0456	P0442-P0456	EVAP system																	X									
P0450,P0451	P0450-P0453	EVAP press sensor												X														

c

*1: Without input speed sensor

*2: With input speed sensor

G02641713

Fig. 17: ECM Monitoring Status Chart (3 Of 6)
Courtesy of TOYOTA MOTOR SALES, U.S.A., INC.

cardiagn.com

Monitor detected malfunction

Monitor disablement (X - disabled)

Fault code	Fault code	Component/ system	Knock sensor	CKP sensor	CMP sensor	VVT sensor1,2	Ignitor	CKP sensor 2	EGR system (closed)	EGR system (open)	EGR Lift sensor	EGR Lift sensor	Catalyst	EVAP system	EVAP press sensor	VSS(ECT2sensor)	VSS(ECT1sensor, non-ECT)	VSS(M/T)	IAC valve	Idle switch	System Voltage	Starter signal	Shift lever position switch	Trans fluid temp sensor	Output speed sensor	Input speed sensor	Stop lamp switch	Trans solenoid (function)*1
			P0325,P0330	P0335	P0340,P0341	P0340-P0346	P0351-P0358	P0385	P0401	P0402	P0405	P0409	P0420,P0430	P0440-P0446	P0450,P0451	P0500	P0500	P0500	P0511	P0510	P0560	P0617	P0705	P0710-P0713	P0720-P0793	P0715-P0717	P0724	P0741-P0796
			P0325-P0333	P0335	P0340,P0341	P0340-P0346	P0351-P0358	P0385	P0401	P0402	P0405,P0406	P0409	P0420,P0430	P0440-P0446	P0450-P0453	P0500	P0500	P0500	P0511	P0510	P0560	P0617	P0705	P0710-P0713	P0720-P0793	P0715-P0717	P0724	P0741-P0796
P0500	P0500	VSS							X	X			X	X					X						X	X		X
P0511	P0511	IAC valve																										
P0510	P0510	Idle switch								X			X	X					X									X
P0560	P0560	System Voltage																										
P0617	P0617	Starter signal																										
P0705	P0705	Shift lever position switch																										
P0710	P0710-P0713	Trans fluid temp sensor																										
P0720-P0793	P0720-P0793	Output speed sensor																										X
P0715-P0717	P0715-P0717	Input speed sensor																										
P0724	P0724	Stop lamp switch																										
P0741-P0796	P0741-P0796	Trans solenoid (function)																										
P0748-P0798	P0748-P0799	Trans solenoid (range)																							X	X		X
P0850	P0850	PNP switch																	X									X
P1010,P1020	P1010,P1020	VVTL																										
P1011,12(,21,22)	P1011,12(,21,22)	VVTL system1(,2)							X	X			X	X					X									
P1126	P1126	Electronic magnet clutch																										
P1129	P1129	Electronic throttle system																										
P1430	P1430	HC adsorber ACT press sensor												X	X													
P2004,6	P2004,6	Intake Manifold Runner Control																										
P2009,10	P2009,10	Intake Manifold Runner Control Circuit																										
P2014,16,17	P2014,16,17	Intake Manifold Runner Position Sensor																										
P2102,P2103	P2102,P2103	Throttle motor																										
P2120-P2138	P2120-P2138	Accel position sensor																										
P2196,P2198	P2196,P2198	A/F sensor (rationality)							X	X			X						X									X
P2226	P2226	BARO sensor																										X
P2237,P2240	P2237,P2240	A/F sensor (open)							X	X			X						X									X
P2423,24	P2423,24	HC Adsorption Catalyst																										
P2430,2,3	P2430,2,3	AIR Pressure Sensor(Low/High)																										
P2431	P2431	AIR Pressure Sensor(Rationality)																										
P2440	P2440	AIR control valve stuck open							X	X			X															
P2441	P2441	AIR control valve stuck close							X	X			X															
P2444	P2444	AIP stuck On							X	X			X															
P2445	P2445	AIP stuck Off							X	X			X															
P2714-P2759	P2714-P2759	Trans solenoid(SLU-SLD)																										X
P2A00,P2A03	P2A00,P2A03	A/F sensor (slow response)							X	X			X						X									X

C

*1: Without input speed sensor

*2: With input speed sensor

G02641714

Fig. 18: ECM Monitoring Status Chart (4 Of 6)
Courtesy of TOYOTA MOTOR SALES, U.S.A., INC.

cardiagn.com

Monitor detected malfunction			Monitor disablement (X - disabled)																								
Fault code			P0741-P0796	P0748-P0798	P0850	P1010,P1020	P1011,12(,21,22)	P1126	P1129	P1430	P2004,P2006	P2009,P2010	P2014,16,17	P2102,P2103	P2120-P2138	P2196,P2198	P2226	P2237,P2240	P2423,24	P2430,2,3	P2431	P2440	P2441	P2444	P2445	P2714-P2759	P2A00,P2A03
	Fault code		P0741-P0796	P0748-P0999	P0850	P1010,P1020	P1011,12(,21,22)	P1126	P1129	P1430	P2004,6	P2009,10	P2014,16,17	P2102,P2103	P2120-P2138	P2196,P2198	P2226	P2237,P2240	P2423,24	P2430,2,3	P2431	P2440	P2441	P2444	P2445	P2714-P2759	P2A00,P2A03
		Component/ system	Trans solenoid (function)*2	Trans solenoid (range)	PNP switch	VVTL	VVTL system1(,2)	Electronic magnet clutch	Electronic throttle system	HC adsorber ACT press sensor	Intake Manifold Runner Control	Intake Manifold Runner Control Circuit	Intake Manifold Runner Position Sensor	Throttle motor	Accel position sensor	A/F Sensor(Rationality) - Sensor1	BARO sensor	A/F Sensor(Open) - Sensor1	HC Adsorption Catalyst	AIR Pressure Sensor(Low/High)	AIR Pressure Sensor(Rationality)	AIR control valve stuck open	AIR control valve stuck close	AIP stuck On	AIP stuck Off	Trans solenoid(SLU-SLD)	A/F Sensor (Slow response) - Sensor1
P0010,P0020	P0010,P0020	VVT VSV1,2																				X	X	X	X		
P0011	P0011	VVT System1 - Advance																				X	X	X	X		
P0012	P0012	VVT System1 - Retard																				X	X	X	X		
P0016,P0018	P0016,P0018	VVT System - Misalignment																				X	X	X	X		
P0021	P0021	VVT System2 - Advance																				X	X	X	X		
P0022	P0022	VVT System2 - Retard																				X	X	X	X		
P0030,50	P0031,32,51,52	O2 Sensor Heater - Sensor1																	X			X	X	X	X		
P0135,P0155	P0031,32,51,52	A/F Sensor Heater - Sensor1														X		X	X			X	X	X	X		X
P0036,56	P0037,38,57,58	O2 Sensor Heater - Sensor2														X			X								
P0043,44,63,64	P0043,44,63,64	O2 Sensor Heater - Sensor3																	X								
P0100,P0101	P0100-P0103	MAF sensor				X	X									X		X	X			X	X	X	X		X
P0105,P0106	P0105-P0108	MAP sensor				X	X									X		X	X			X	X	X	X		X
P0110	P0110-P0113	IAT sensor									X					X		X				X	X	X	X		X
P0115,P0116	P0115-P0118	ECT sensor	X			X	X				X					X		X	X			X	X	X	X		X
P0120,P0121	P0120-P0223,P2135	TP sensor														X		X	X			X	X	X	X		X
P0125	P0125	Insufficient ECT for Closed Loop	X			X										X		X	X			X	X	X	X		X
P0128	P0128	Thermostat																									
P0130-P0153	P0130-P0153	O2 Sensor - Sensor1																	X			X	X	X	X		
P0134,P0154	P0134,P0154	O2 Sensor, A/F Sensor(No Activity) - Sensor1														X		X	X			X	X	X	X		X
P0136,P0156	P0136,P0156	O2 Sensor - Sensor2														X			X								
P0142,P0162	P0142,P0162	O2 Sensor - Sensor3																	X								
P0171,P0172	P0171,P0172	Fuel system														X		X	X			X	X	X	X		X
P0300-P0308	P0300-P0308	Misfire														X		X	X			X	X	X	X		X
P0325,P0330	P0325-P0333	Knock sensor																				X	X	X	X		
P0335	P0335	CKP sensor				X	X									X		X	X			X	X	X	X		X
P0340, P0341	P0340, P0341	CMP sensor				X	X									X		X	X			X	X	X	X		X
P0340-P0346	P0340-P0346	VVT sensor1,2																				X	X	X	X		
P0351-P0358	P0351-P0358	Ignitor																	X			X	X	X	X		
P0385	P0385	CKP sensor 2				X	X									X		X	X			X	X	X	X		X
P0401	P0401	EGR system (closed)																	X								
P0402	P0402	EGR system (open)														X		X	X			X	X	X	X		X
P0405,P0409	P0405-P0409	Lift sensor																									
P0420,P0430	P0420,P0430	Catalyst																									
P0442-P0456	P0442-P0456	EVAP system														X		X				X	X	X	X		X
P0450,P0451	P0450-P0453	EVAP press sensor																				X	X	X	X		

C

*1: Without input speed sensor

*2: With input speed sensor

G02641715

Fig. 19: ECM Monitoring Status Chart (5 Of 6)

Courtesy of TOYOTA MOTOR SALES, U.S.A., INC.

cardiagn.com

Monitor detected malfunction			Monitor disablement (X - disabled)																								
Fault code			P0741-P0796	P0748-P0798	P0850	P1010,P1020	P1011,12(,21,22)	P1126	P1129	P1430	P2004,P2006	P2009,P2010	P2014,16,17	P2102,P2103	P2120-P2138	P2196,P2198	P2226	P2237,P2240	P2423,24	P2430,2,3	P2431	P2440	P2441	P2444	P2445	P2714-P2759	P2A00,P2A03
	Fault code		P0741-P0796	P0748-P0799	P0850	P1010,P1020	P1011,12(,21,22)	P1126	P1129	P1430	P2004,6	P2009,10	P2014,16,17	P2102,P2103	P2120-P2138	P2196,P2198	P2226	P2237,P2240	P2423,24	P2430,2,3	P2431	P2440	P2441	P2444	P2445	P2714-P2759	P2A00,P2A03
		Component/ system	Trans solenoid (function)*2	Trans solenoid (range)	PNP switch	VVTL	VVTL system1(,2)	Electronic magnet clutch	Electronic throttle system	HC adsorber ACT press sensor	Intake Manifold Runner Control	Intake Manifold Runner Control Circuit	Intake Manifold Runner Position Sensor	Throttle motor	Accel position sensor	A/F Sensor(Rationality) - Sensor1	BARO sensor	A/F Sensor(Open) - Sensor1	HC Adsorption Catalyst	AIR Pressure Sensor(Low/High)	AIR Pressure Sensor(Rationality)	AIR control valve stuck open	AIR control valve stuck close	AIP stuck On	AIP stuck Off	Trans solenoid(SLU-SLD)	A/F Sensor (Slow response) - Sensor1
P0500	P0500	VSS	X													X		X	X			X	X	X	X		X
P0511	P0511	IAC valve														X		X									X
P0510	P0510	Idle switch														X		X	X								X
P0560	P0560	System Voltage																									
P0617	P0617	Starter signal																									
P0705	P0705	Shift lever position switch																									
P0710	P0710-P0713	Trans fluid temp sensor																									
P0720-P0793	P0720-P0793	Output speed sensor																									
P0715-P0717	P0715-P0717	Input speed sensor																									
P0724	P0724	Stop lamp switch																									
P0741-P0796	P0741-P0796	Trans solenoid (function)																									
P0748-P0798	P0748-P0799	Trans solenoid (range)	X																								
P0850	P0850	PNP switch																									
P1010,P1020	P1010,P1020	VVTL																				X	X	X	X		
P1011,12(,21,22)	P1011,12(,21,22)	VVTL system1(,2)																				X	X	X	X		X
P1126	P1126	Electronic magnet clutch																									
P1129	P1129	Electronic throttle system																									
P1430	P1430	HC adsorber ACT press sensor																									
P2004,6	P2004,6	Intake Manifold Runner Control																									
P2009,10	P2009,10	Intake Manifold Runner Control Circuit																									
P2014,16,17	P2014,16,17	Intake Manifold Runner Position Sensor																									
P2102,P2103	P2102,P2103	Throttle motor																									
P2120-P2138	P2120-P2138	Accel position sensor																									
P2196,P2198	P2196,P2198	A/F sensor (rationality)																	X			X	X	X	X		X
P2226	P2226	BARO sensor														X		X				X	X	X	X		X
P2237,P2240	P2237,P2240	A/F sensor (open)																	X			X	X	X	X		X
P2423,24	P2423,24	HC Adsorption Catalyst																									
P2430,2,3	P2430,2,3	AIR Pressure Sensor(Low/High)																			X	X	X	X	X		
P2431	P2431	AIR Pressure Sensor(Rationality)																				X	X	X	X		
P2440	P2440	AIR control valve stuck open														X		X	X								X
P2441	P2441	AIR control valve stuck close														X		X	X								X
P2444	P2444	AIP stuck On														X		X	X								X
P2445	P2445	AIP stuck Off														X		X	X								X
P2714-P2759	P2714-P2759	Trans solenoid(SLU-SLD)																									
P2A00,P2A03	P2A00,P2A03	A/F sensor (slow response)																	X			X	X	X	X		

C

*1: Without input speed sensor

*2: With input speed sensor

G02641716

Fig. 20: ECM Monitoring Status Chart (6 Of 6)

Courtesy of TOYOTA MOTOR SALES, U.S.A., INC.

cardiagn.com

15. **O2S TEST RESULT**

INTRODUCTION

The O2S TEST RESULT refers to the results of the engine control module (ECM) when it monitors the oxygen sensor (O2S), and it can be read using the hand-held tester or the generic OBDII scan tool. Based on this, you can find the O2S's conditions. The ECM monitors the O2S in the various items. You can read the monitor result (TEST DATA) of each monitor item using the O2S TEST RESULT. However, the output value of the TEST DATA is the latest "snapshot" value that is taken after monitoring and therefore it is not dynamic.

In this repair manual, the description of the O2S TEST RESULT (for O2S related DTCs) are written in a table.

This table consists of 5 items:

1. TEST ID (a code applied to each TEST DATA)
2. Description of TEST DATA
3. Conversion Factor (When Conversion Factor has a value written in the table, multiply the TEST DATA value appearing on the scan tool by the Conversion Factor value. The result will be the required value.)
4. Unit
5. Standard Value

If the TEST DATA value appearing on the scan tool is out of the standard value, the O2S is malfunctioning. If it is within the standard value, the O2S is functioning normally. However, if the value is on the borderline of the standard value, the O2S may malfunction very soon.

HOW TO READ O2S TEST RESULT USING HAND-HELD TESTER

a. Connect the hand-held tester to the DLC3.
b. On the tester screen, select the following menus: DIAGNOSIS / CARB OBDII / O2S TEST RESULT. A list of the O2S equipped on the vehicle will be displayed.

cardiagn.com

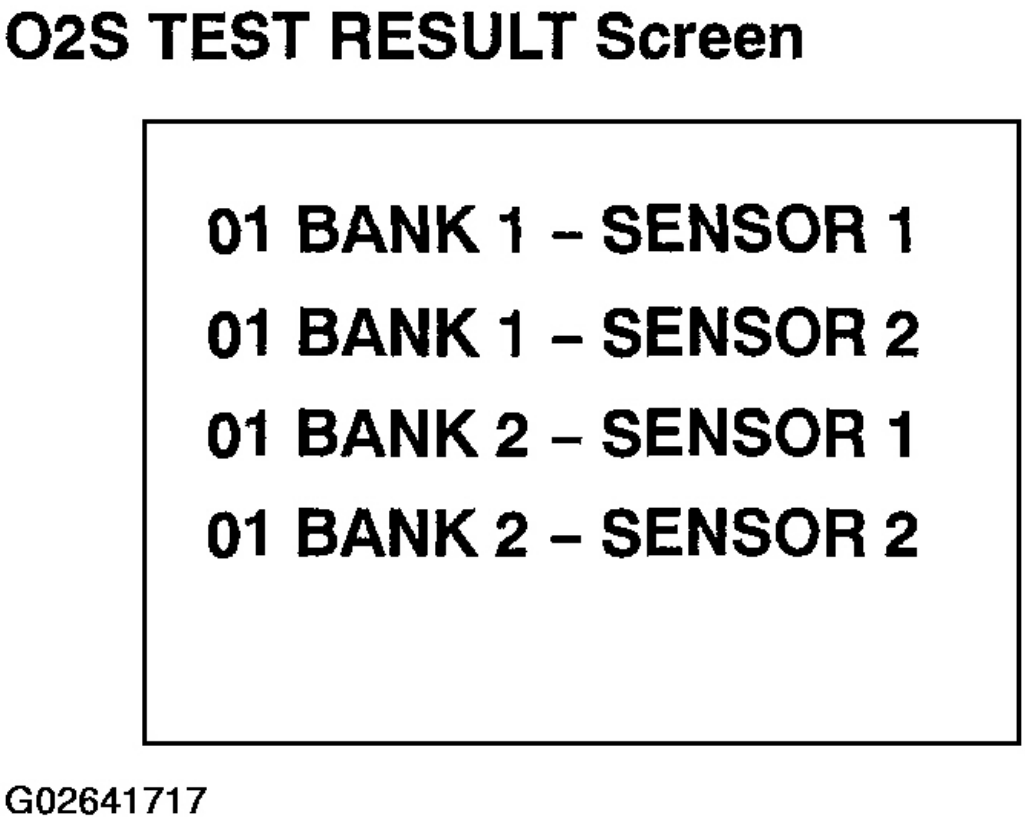

Fig. 21: Display O2S Test Result Screen
Courtesy of TOYOTA MOTOR SALES, U.S.A., INC.

c. Select the desired O2S and press ENTER. The following screen will appear.
d. Press HELP and * simultaneously. More information will appear.
e. Example:
   1. The hand-held tester displays "17" as a value of the "TIME $81" (see **Fig. 22**).
   2. Find the Conversion Factor value of "TIME $81" in the O2S TEST RESULT chart below. 0.3906 is specified for $81 in this chart.

cardiagn.com

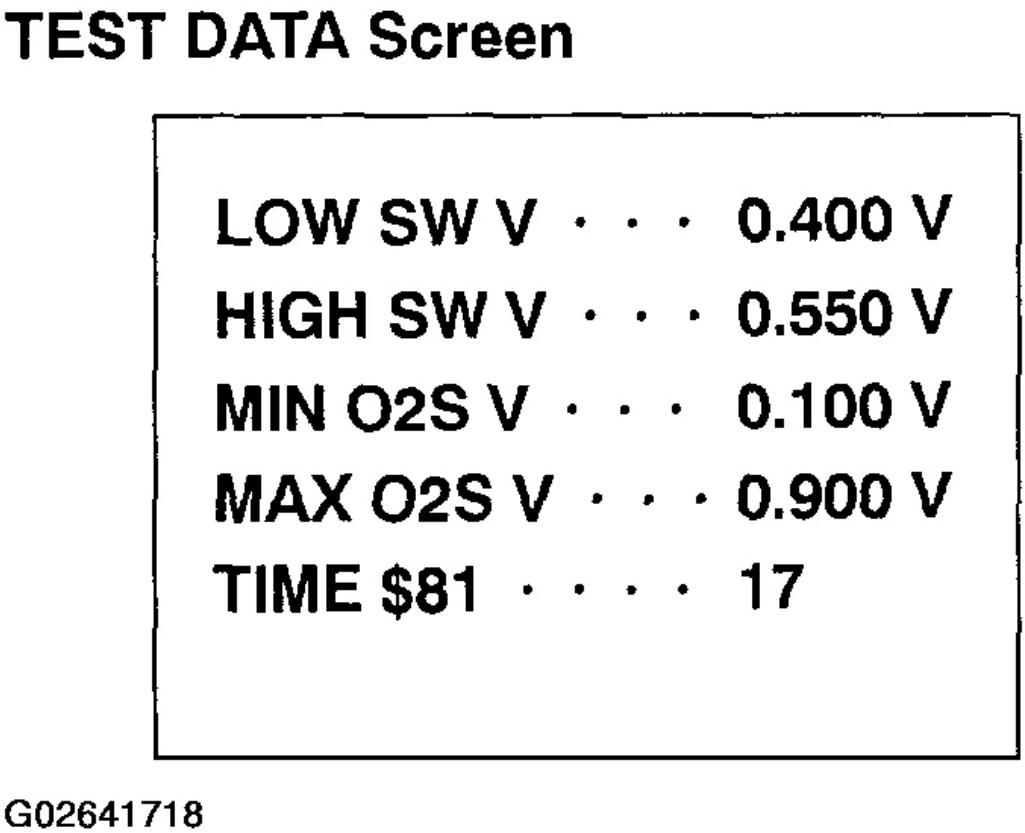

Fig. 22: Display Test Data Screen
Courtesy of TOYOTA MOTOR SALES, U.S.A., INC.

3. Multiply "17" in step (1) by 0.3906 (Conversion Factor) in the step (2).

   17 x 0.3906 = 6.6%

4. If the answer is within the standard value, the "TIME $81" can be confirmed to be normal.

O2S TEST RESULT Chart

O2S TEST RESULT CHART

TEST ID	Description of TEST DATA	Conversion Factor	Unit	Standard Value
$81	Percentage of monitoring time when the O2S voltage is less than 0.05 V	Multiply 0.3906	%	Within 60%

cardiagn.com

16. **CHECKING MONITOR STATUS**

HINT:

"MONITOR RESULT" indicates normal or malfunction of each component and system when judgment has done.

How to read data

1. Connect the hand-held tester to the DLC 3.
2. Enter the following menus: DIAGNOSIS / ENHANCED OBD II/MONITOR INFO/MONITOR RESULT.

   The Test ID will appear at the beginning of each line, followed by INCMP, PASS, or FAIL.

   HINT:

   - INCMP: Stands for "incomplete". The judgement has not been done yet.
   - PASS: Normal is detected.
   - FAIL: A malfunction has been detected.

cardiagn.com

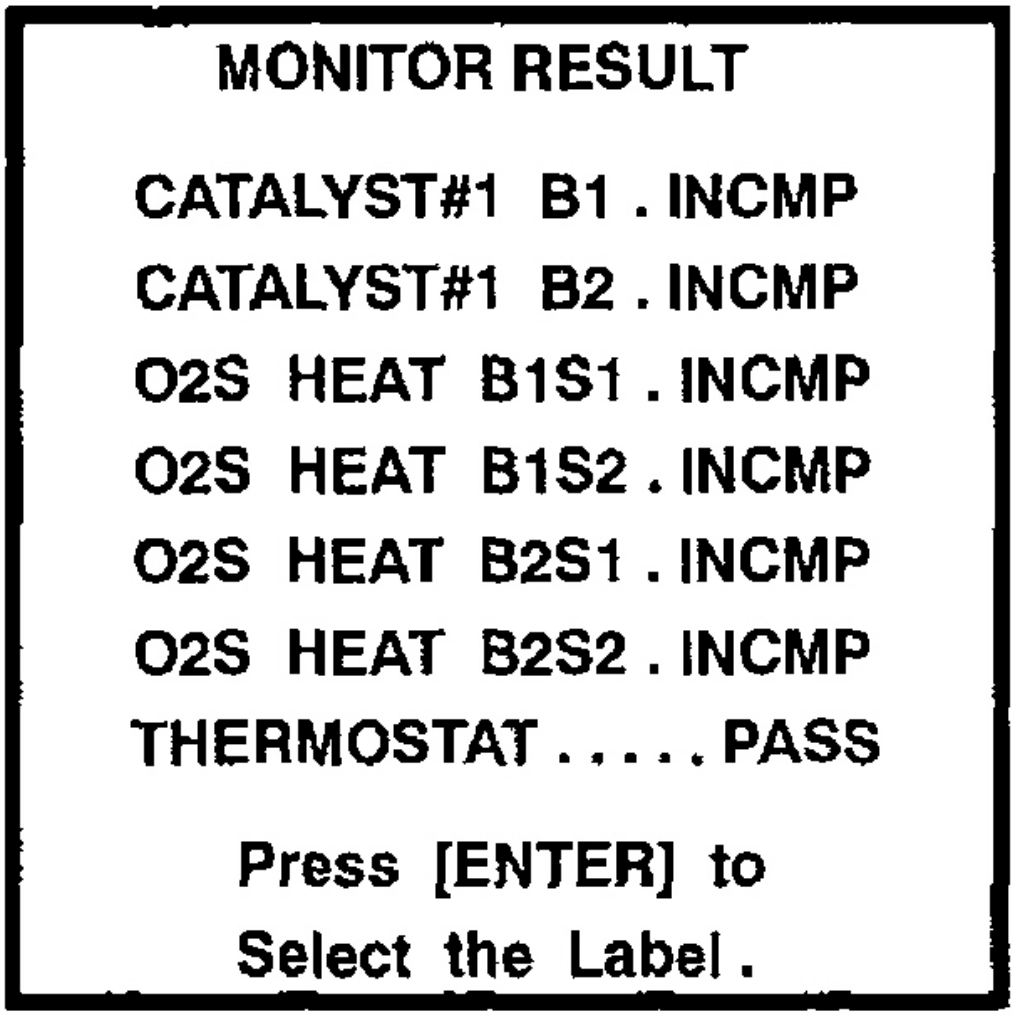

G02641719

Fig. 23: Display Monitor Result Screen
Courtesy of TOYOTA MOTOR SALES, U.S.A., INC.

3. Select a Test ID that you want from the list and press the "ENTER" button. You will see the following screen:
   - VAL (TEST VALUE) [Test Data] [Unit]
   - LMT (TEST LIMIT) [Test Limit] [Unit]
   - TLT [Test Limit Type]

cardiagn.com

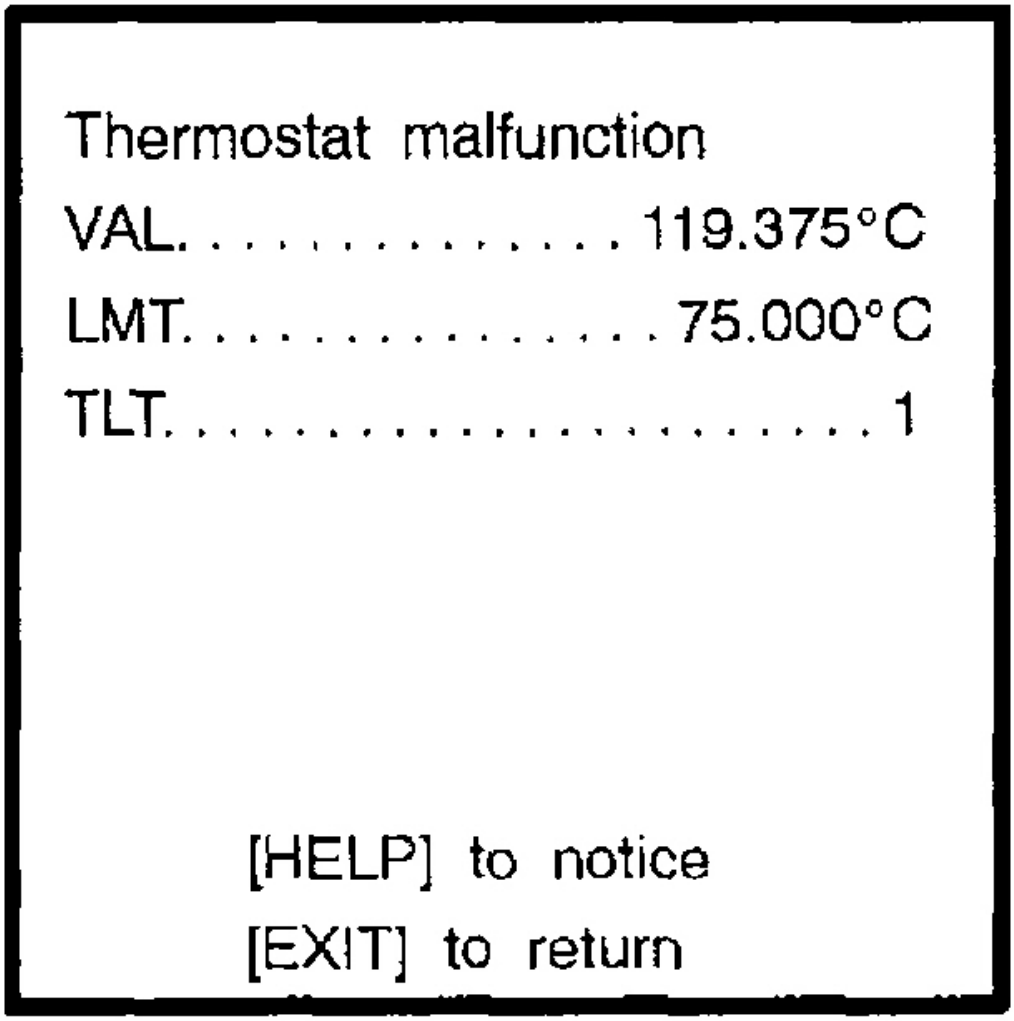

G02641720

Fig. 24: Display Test Result Screen (1 Of 2)
Courtesy of TOYOTA MOTOR SALES, U.S.A., INC.

4. By pressing the "HELP" button, you can see more information.

cardiagn.com

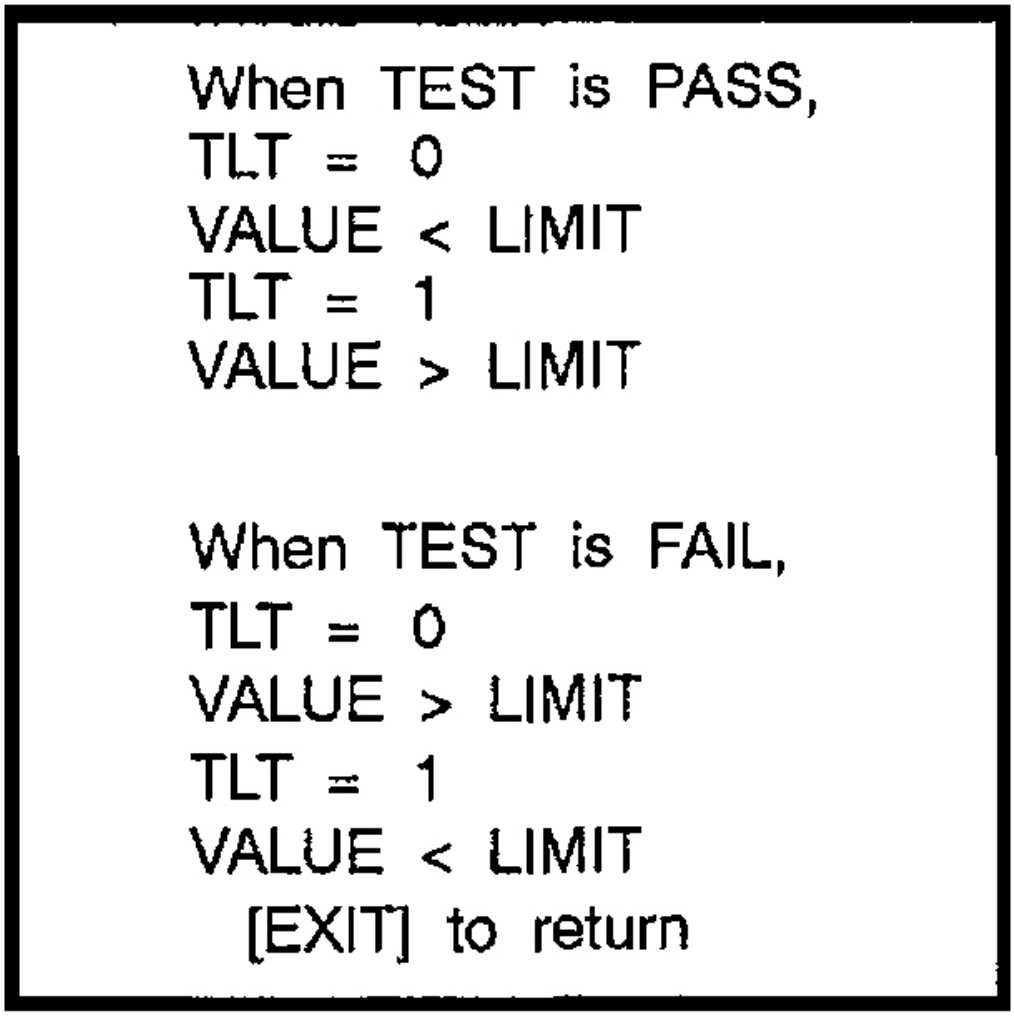

G02641721

Fig. 25: Display Test Result Screen (2 Of 2)
Courtesy of TOYOTA MOTOR SALES, U.S.A., INC.

HINT:

- Monitor test results can be viewed in the MONITOR RESULT screen.
- Monitor test results indicate the latest malfunction judgement result of this diagnostic.
- TEST VALUE indicates the detection parameter value (Example: P0128 Thermostat Malfunction = Engine coolant temperature at the time malfunction (or normal) judgement is done).

cardiagn.com

- TEST LIMIT indicates a threshold of malfunction judgement (Example: P0128 Thermostat Malfunction = 75°C).
- When the monitor runs, the monitored parameter's value is recorded. The value is then compared to the TEST LIMIT to determine if the result is PASS or FAIL.
- By comparing the Parameter VALUE to the TEST LIMIT, it is possible to determine the degree of failure.
- In rare cases, the monitor may have passed even with a DTC set and MIL illuminated. The monitor possibly detect a malfunction on the previous trip, and then passed on the most recent trip. This would indicate an intermittent problem may be the cause of the DTC.

REGISTRATION

NOTE: The Vehicle Identification Number (VIN) must be input into the replacement ECM.

HINT:

The VIN is in the form of a 17-digit alphanumeric vehicle identification number. A hand-held tester is required to register the VIN.

1. **DESCRIPTION**

   This registration section consists of three parts, Input Instructions, Read VIN and Write VIN.

   a. Input Instructions: Explains the general VIN input instructions using a hand-held tester.
   b. Read VIN: Explains the VIN reading process in a flowchart. This process allows the VIN stored in the ECM to be read, in order to confirm that the two VINs, provided with the vehicle and stored in the vehicle's ECM, are the same.
   c. Write VIN: Explains the VIN writing process in a flowchart. This process allows the VIN to be input into the ECM. If the ECM is changed, or the VIN and VIN do not match, the VIN can be registered, or overwritten in the ECM by following this procedure.

2. **INPUT INSTRUCTIONS**

   a. Hand-held tester

      The arrow buttons (UP, DOWN, RIGHT and LEFT) and numerical buttons (0 to 9) are used, in order to input the VIN.

   b. Cursor Operation

      To move the cursor around the tester screen, press the RIGHT and LEFT buttons.

   c. Alphabetical Character Input
      1. Press the UP and DOWN buttons to select the desired alphabetical character.
      2. After selection, the cursor should move.

cardiagn.com

d. Numeric Character Input
   1. Press the numerical button corresponding to the number that you want to input.
   2. Select or input the correct character using the UP/DOWN buttons, or the numerical buttons.

   HINT:

   Numerical characters can be selected by using the UP and DOWN buttons.

e. Correction
   1. After input, the cursor should move.
   2. When correcting the input character(s), put the cursor onto the character using the RIGHT or LEFT buttons.

f. Finishing Input Operation
   1. Make sure that the input VIN matches the vehicle VIN after input.
   2. Press the ENTER button on the tester.

3. **READ VIN (Vehicle Identification Number)**
   a. Read VIN using a hand-held tester.

READ:

cardiagn.com

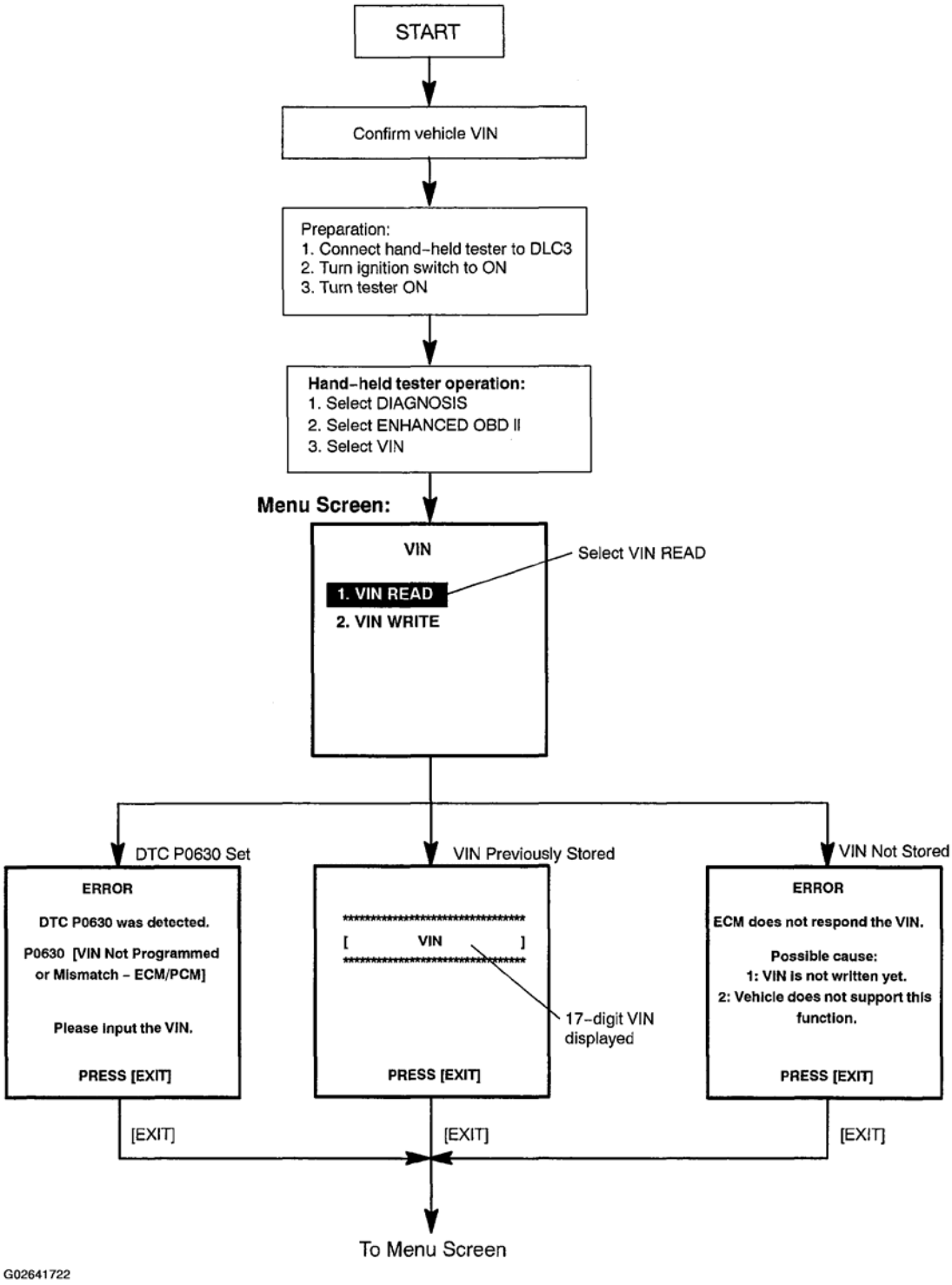

Fig. 26: Vehicle Identification Number Reading Flow Chart
Courtesy of TOYOTA MOTOR SALES, U.S.A., INC.

4. **WRITE VIN**

cardiagn.com

a. Write VIN using the hand-held tester.

Write:

cardiagn.com

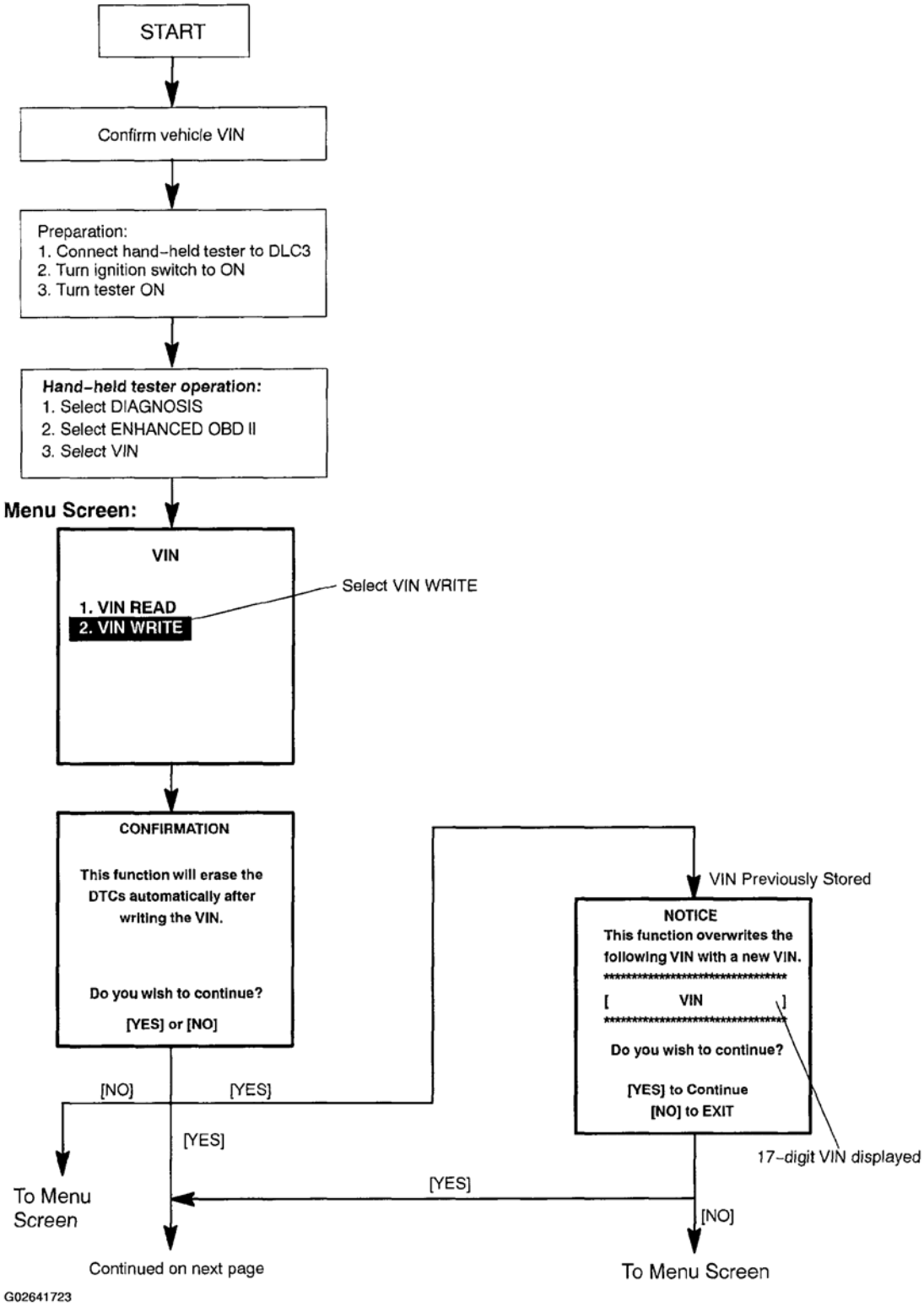

Fig. 27: Vehicle Identification Number Writing Flow Chart (1 Of 2)
Courtesy of TOYOTA MOTOR SALES, U.S.A., INC.

cardiagn.com

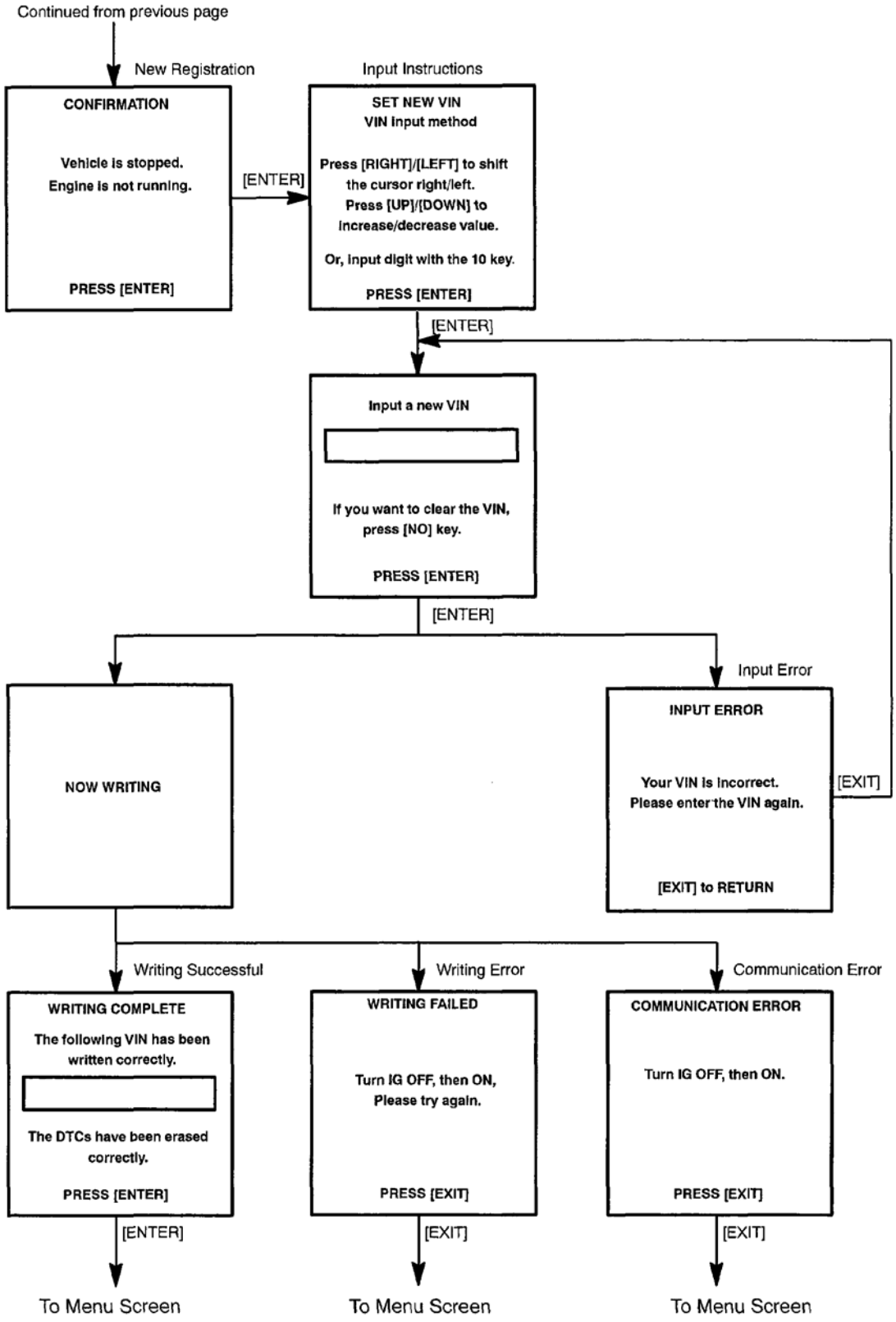

cardiagn.com

Fig. 28: Vehicle Identification Number Writing Flow Chart (2 Of 2)
Courtesy of TOYOTA MOTOR SALES, U.S.A., INC.

READINESS MONITOR DRIVE PATTERN

1. **PURPOSE OF READINESS TESTS**
   - The On-Board Diagnostic (OBD II) system is designed to monitor the performance of emission-related components, and report any detected abnormalities with Diagnostic Trouble Codes (DTCs). Since various components need to be monitored during different driving conditions, the OBD II system runs separate monitoring programs called readiness monitors.
   - The hand-held tester's software must be version 9.0 or newer to view the readiness monitor status. From the "Enhanced OBD II Menu", select "Monitor Status" to view the readiness monitor status.
   - A generic OBD II scan tool can also be used to view the readiness monitor status.
   - When the readiness monitor status reads "complete", the necessary conditions have been met for running performance tests for that readiness monitor.

   HINT:

   Many state Inspection and Maintenance (I/M) programs require a vehicle's readiness monitor status to show "complete".

   - The Readiness Monitor will be reset to "incomplete" if:
     - The ECM has lost battery power or blown a fuse
     - DTCs have been cleared.
     - The conditions for running the Readiness Monitor have not been met.
   - If the readiness monitor status shows "incomplete", follow the appropriate readiness monitor drive pattern to change the status to "complete".

   CAUTION: Strictly observe posted speed limits, traffic laws, and road conditions when performing these drive patterns.

   NOTE: The following drive patterns are the fastest method of completing all the requirements necessary for making the readiness monitor status read "complete".
   If forced to momentarily stop a drive pattern due to traffic or other factors, the drive pattern can be resumed. Upon completion of the drive pattern, in most cases, the readiness monitor status will change to "complete".
   Sudden changes in vehicle load and speed, such as driving up and down hills and/or sudden acceleration, hinder readiness monitor completion.

2. **CATALYST MONITOR (A/F sensor TYPE)**

cardiagn.com

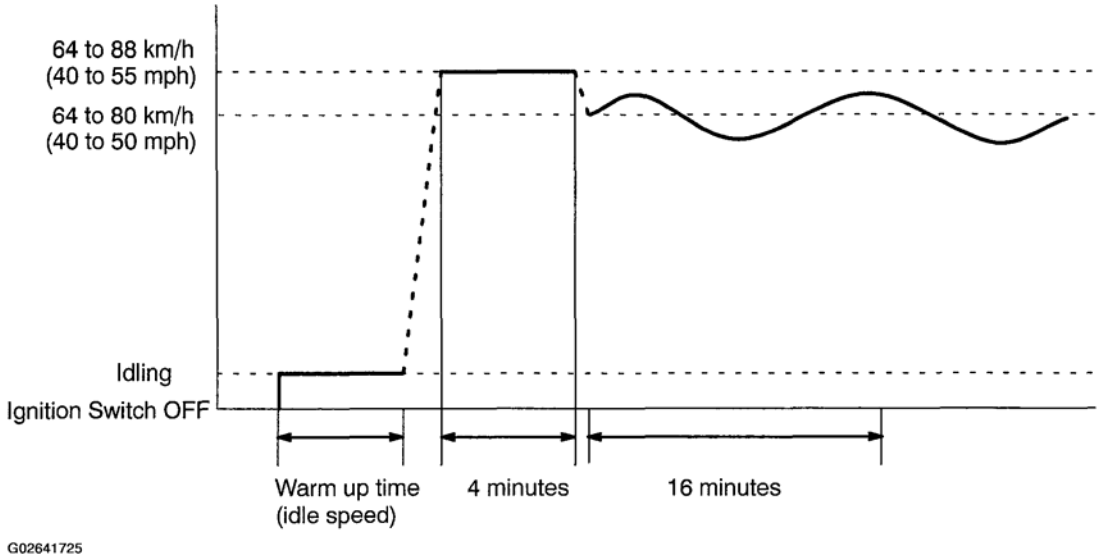

Fig. 29: Readiness Monitor Drive Pattern Graph (Catalyst Monitor (A/F Sensor Type))
Courtesy of TOYOTA MOTOR SALES, U.S.A., INC.

a. Preconditions

The monitor will not run unless:

- The MIL is OFF.
- Engine Coolant Temperature (ECT) is 75°C (167°F) or greater.
- Intake Air Temperature (IAT) is - 10°C (14°F) or greater*

NOTE: The readiness test can be completed in cold ambient conditions (less than - 10°C / 14°F) and / or high altitudes (more than 2,450 m / 8,000 feet). Finish the drive pattern, turn the ignition switch OFF and then on again, and repeat the drive pattern a second time.

b. Drive Pattern

1. Connect the OBD II scan tool to the DLC3 to check monitor status and preconditions (refer to step "a").
2. Drive the vehicle at 64 to 88 km/h (40 to 55 mph) for approximately 4 minutes.

NOTE: Drive with smooth throttle operation and avoid sudden acceleration.
If IAT is less than 10°C (50°F) when the engine was started, drive the vehicle at 64 to 88 km/h (40 to 55 mph) for an additional 4 minutes.

cardiagn.com

3. Drive the vehicle allowing speed to fluctuate between 64 to 80 km/h (40 to 50 mph) for about 16 minutes.

NOTE: Drive with smooth throttle operation and avoid sudden closure of the throttle.

4. Check the status of the readiness monitor on the scan tool display. If the readiness monitor status did not switch to "complete", ensure preconditions are met, turn the ignition switch OFF, and then repeat steps 2 and 3.

3. **EVAP MONITOR (VACUUM PRESSURE MONITOR)**

NOTE: A cold soak must be performed prior to conducting the drive pattern to complete the Internal Pressure Readiness Monitor.

a. Cold Soak Preconditions

The monitor will not run unless:

- The MIL is OFF
- Fuel level is approximately 1/2 to 3/4 fuel.
- Altitude is 2,450 m (8,000 feet) or less.

b. Cold Soak Procedure

Let vehicle cold soak for 8 hours or until "IAT - ECT" must be -7°C (-13°F) to 11.1°C (20°F).

HINT:

Examples:

- Scenario 1

  ECT = 24°C (75°F)

  IAT = 16°C (60°F)

  Difference between ECT and IAT is 8°C (15°F)

  --> The monitor will not run because "IAT - ECT" is less than -7°C (-13°F).

- Scenario 2

  ECT = 21°C (70°F)

  IAT = 20°C (68°F)

cardiagn.com

Difference between ECT and IAT is 1°C (2°F)

--> The monitor will run because "IAT - ECT" is -7°C (-13°F) and 11.1 °C (20°F).

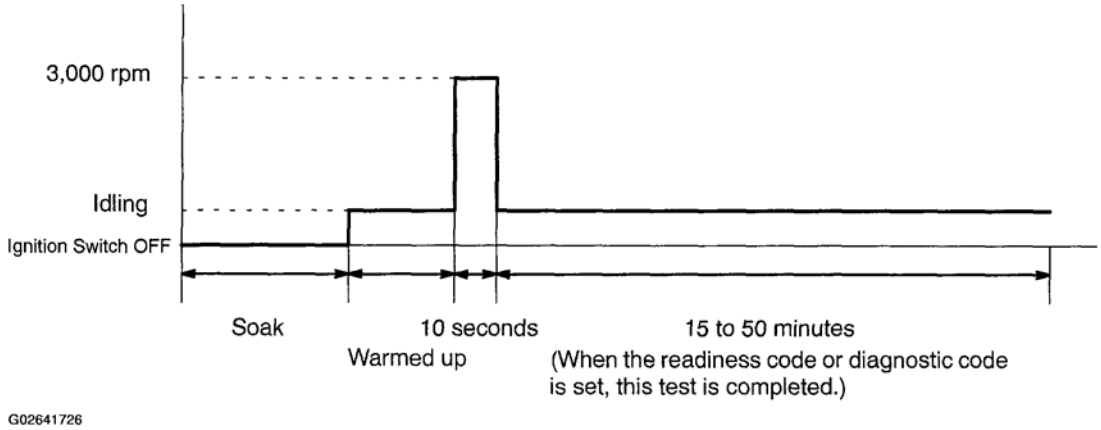

Fig. 30: Readiness Monitor Drive Pattern Graph (EVAP Monitor (Vacuum Pressure Monitor))
Courtesy of TOYOTA MOTOR SALES, U.S.A., INC.

c. Preconditions

The monitor will not run unless:

- The MIL is OFF
- Fuel level is approximately 1/2 to 3/4 fuel.
- The altitude is 2,450 m (8,000 feet) or less*
- Engine Coolant Temperature (ECT) is between 4.4°C and 35°C (40°F and 95°F)
- Intake Air Temperature (IAT) is between 4.4°C and 35°C (40°F and 95°F)*
- The cold Soak Procedure has been completed
- Before starting the engine, the difference between ECT and IAT must be less than 7°C (13° F)

HINT:

Examples:

- Scenario 1

  ECT = 24°C (75°F)

  IAT = 16°C (60°F)

cardiagn.com

Difference between ECT and IAT is 8°C (15°F)

--> The monitor will not run because difference between ECT and IAT is higher than 7°C (13°F)

- Scenario 2

  ECT = 21°C (70°F)

  IAT = 20°C (68°F)

  Difference between ECT and IAT is 1°C (2°F)

  --> The monitor will run because difference between ECT and IAT is less than 7°C (13°F)

NOTE: **The readiness test can be completed in cold ambient conditions (less than 4.4°C / 40°F) and / or high altitudes (more than 2,450 m / 8,000 feet). Finish the drive pattern, turn the ignition switch OFF and then on again, and repeat the drive pattern a second time.**

d. Drive Pattern
   1. Connect the OBD II scan tool to the DLC3 to check monitor status and preconditions (refer to step "a").
   2. Release pressure in fuel tank by removing the fuel tank cap and then reinstalling it.
   3. Start the engine and allow to idle until ECT is 75°C (167°F) or more.
   4. Run the engine at 3,000 RPM for about 10 seconds.
   5. With the engine idling, turn the A/C ON to create slight electrical load. Wait 15 to 50 minutes.

NOTE: **If the vehicle is not equipped with A/C, put a slight load on the engine by doing the following:**

- **Set the parking brake securely.**
- **Use wheel chocks to secure the tires.**
- **Move the shift lever to drive (position D) and allow the engine to idle for 15 to 50 minutes. Check the readiness monitor status.**

4. **OXYGEN/AIR FUEL RATIO SENSOR MONITOR (FRONT A/F SENSOR AND REAR O2S SYSTEM)**

cardiagn.com

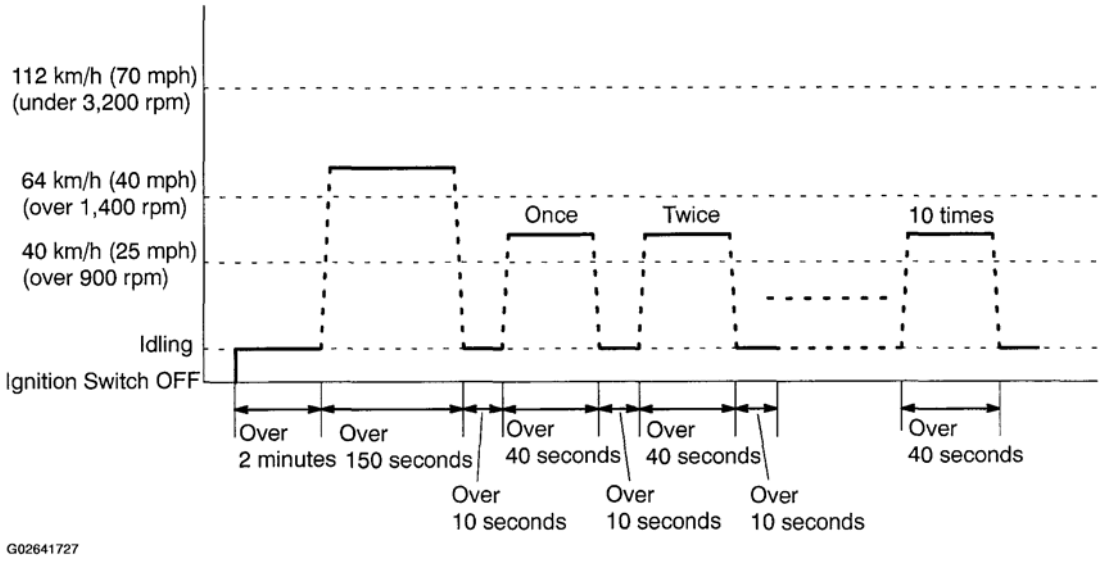

Fig. 31: Readiness Monitor Drive Pattern Graph (Oxygen/Air Fuel Ratio Sensor Monitor)
Courtesy of TOYOTA MOTOR SALES, U.S.A., INC.

a. Preconditions

The monitor will not run unless:

The MIL is OFF

b. Drive Pattern
   1. Connect the OBD II scan tool to the DLC3 to check monitor status and preconditions (refer to step "a").
   2. Start the engine and allow it to idle for 2 minutes or more.
   3. Drive the vehicle at 64 to 112 km/h (40 to 70 mph) for at least 150 seconds.
   4. Stop the vehicle and allow the engine to idle for 10 seconds or more.
   5. Drive the vehicle at 40 to 64 km/h (25 to 40 mph) for at least 40 seconds.
   6. Stop the vehicle and allow the engine to idle for 10 seconds or more
   7. Perform steps 5 and 6 10 times.
   8. Check the readiness monitor status. If the readiness monitor status did not change to "complete", check the preconditions, turn the ignition switch OFF, and repeat steps 1 to6.

5. **OXYGEN / A/F SENSOR HEATER MONITOR**

cardiagn.com

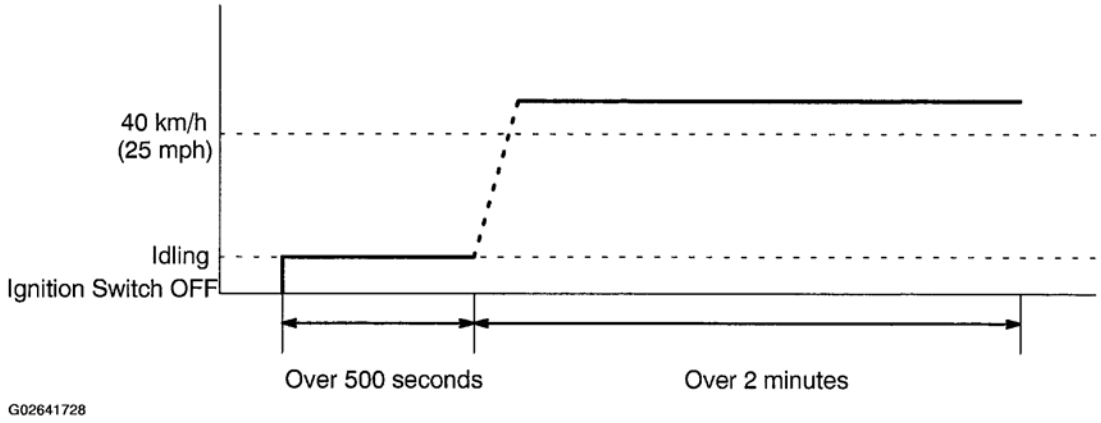

Fig. 32: Readiness Monitor Drive Pattern Graph (Oxygen/Air Fuel Sensor Heater Monitor)
Courtesy of TOYOTA MOTOR SALES, U.S.A., INC.

a. Preconditions

   The monitor will not run unless:

   The MIL is OFF

b. Drive Pattern
   1. Connect the OBD II scan tool to the DLC3 to check monitor status and preconditions (refer to step "a").
   2. Start the engine and allow it to idle for 500 seconds or more.
   3. Drive the vehicle at 40 km/h (25 mph) or more at least 2 minutes.
   4. Check the readiness monitor status. If the readiness monitor status did not change to "complete", check preconditions, turn the ignition switch OFF, and repeat steps 2 and 3.

PROBLEM SYMPTOMS TABLE

cardiagn.com

Symptom	Suspected Area
Engine does not crank (does not start)	10.Starter 11.Starter relay 12.Driver side J/B ECU
No initial combustion (does not start)	1. ECM power source circuit 2. Fuel pump control circuit 3. ECM
No complete combustion (does not start)	Fuel pump control circuit
Difficult to start (engine cranks normally)	1. Starter signal circuit 2. Fuel pump control circuit 3. Compression
Difficult to start cold engine	1. Starter signal circuit 2. Fuel pump control circuit
Difficult to start hot engine	1. Starter signal circuit 2. Fuel pump control circuit
High engine idle speed (poor idling)	1. A/C signal circuit (Compressor circuit) 2. ECM power source circuit
Low engine idle speed (poor idling)	1. A/C signal circuit (Compressor circuit) 2. Fuel pump control circuit
Rough idling (poor idling)	1. Compression 2. Fuel pump control circuit
Hunting (poor idling)	1. ECM power source circuit 2. Fuel pump control circuit
Hesitation/Poor acceleration (poor driveability)	1. Fuel pump control circuit 2. A/T faulty
Surging (poor driveability)	Fuel pump control circuit
Engine stalls soon after starting	Fuel pump control circuit
Engine stalls during A/C operation	1. A/C switch circuit (Compressor circuit) 2. ECM

G02912396

Fig. 33: Problem Symptoms Table
Courtesy of TOYOTA MOTOR SALES, U.S.A., INC.

TERMINALS OF ECM

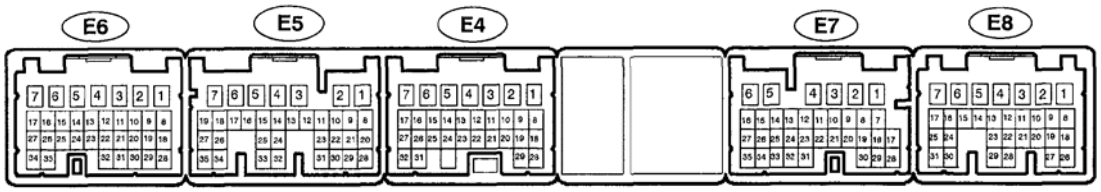

G02641730

Fig. 34: Identifying ECM Terminals
Courtesy of TOYOTA MOTOR SALES, U.S.A., INC.

cardiagn.com

HINT:

Each ECM terminal's standard voltage are shown in the following charts below.

In the table, first follow the information under "Condition". Next look under "Symbols (Terminal No.)" for the terminals to be inspected. The standard voltage between the terminals is shown under "Specified Condition". Use the illustration above as a reference for the ECM terminals. (See **Fig. 34**)

Symbols (Terminal No.)	Wiring Color	Condition		Specified Condition
BATT (E8-3) - E1 (E4-1)	R-W (SB) - BR	Always		9 to 14 V
+BM (E7-6) - E1 (E4-1)	R (P) - BR	Always		9 to 14 V
IGSW (E8-9) - E1 (E4-1)	B-O (W) - BR	Ignition switch ON		9 to 14 V
+B (E8-1) - E1 (E4-1)	B-R (LG) - BR	Ignition switch ON		9 to 14 V
OC1+ (E4-16) - OC1- (E4-15)	W - W-R	Ignition switch ON		Pulse generation (see page DI-51)
MREL (E8-8) - E1 (E4-1)	G-W (W) - BR	Ignition switch ON		9 to 14 V
VC (E6-18) - E2 (E6-28)	Y - BR	Ignition switch ON		4.5 to 5.5 V
VG (E6-30) - EVG (E6-29)	L-W - L	Idling	P or N position, A/C switch OFF	0.5 to 3.0 V
THA (E6-20) - E2 (E6-28)	R-W - BR	Idling	Intake air temp. 20°C (68° F)	0.5 to 3.4 V
THW (E6-19) - E2 (E6-28)	W - BR	Idling	Engine coolant temp. 80°C (176°F)	0.2 to 1.0 V
VTA1 (E6-21) - E2 (E6-28)	L-R - BR	Ignition switch ON	Accelerator pedal fully depressed	3.2 to 4.8 V
		Ignition switch ON	Accelerator pedal fully released	0.4 to 1.0 V
VTA 2 (E6-31) - E2 (E6-28)	G-W - BR	Ignition switch ON	Accelerator pedal fully depressed	4.5 to 5.5 V
		Ignition switch ON	Accelerator pedal fully released	2.1 to 3.1 V
VPA (E8-22) - EPA (E8-28)	P-B (W) - Y-R (SB)	Ignition switch ON	Accelerator pedal fully depressed	2.5 to 4.6 V
		Ignition switch ON	Accelerator pedal fully released	0.5 to 1.1 V
VPA2 (E8-23) - EPA2 (E8-29)	P (W) - Y-G (SB)	Ignition switch ON	Accelerator pedal fully depressed	3.5 to 5.5 V
		Ignition switch ON	Accelerator pedal fully released	1.5 to 2.9 V
VCPA (E8-26) - EPA (E8-28)	Y (W) - Y-R (SB)	Ignition switch ON		4.5 to 5.5 V
VCP2 (E8-27) - EPA2 (E8-29)	Y-B (W) - Y-G (SB)	Ignition switch ON		4.5 to 5.5 V
HT1B (E5-21) - E1 (E4-1) HA1A (E5-5) - E04 (E5-7)	R-B - BR W-L - W-B	Idling		Below 3.0 V
		Ignition switch ON		9 to 14 V
A1A+ (E5-23) - E1 (E4-1)	G - BR	Always (Ignition switch ON)		3.3 fixed*1 V
A1A- (E5-31) - E1 (E4-1)	R - BR	Always (Ignition switch ON)		3.0 fixed*1 V
OX1B (E5-29) - E1 (E4-1)	B - BR	Maintain engine speed at 2,500 rpm for 3 minutes after warming up		Pulse generation (see page DI-119)

G02641731

Fig. 35: ECM Terminals Voltage Chart (1 Of 2)
Courtesy of TOYOTA MOTOR SALES, U.S.A., INC.

cardiagn.com

#1 (E6-1) - E01 (E6-7)	B-R - W-B	Ignition switch ON	9 to 14 V
		Idling	Pulse generation (see page DI-140)
#2 (E6-2) - E01 (E6-7)	B - W-B	Ignition switch ON	9 to 14 V
		Idling	Pulse generation (seage DI-140)
#3 (E6-3) - E01 (E6-7)	W - W-B	Ignition switch ON	9 to 14 V
		Idling	Pulse generation (see page DI-140)
#4 (E6-4) - E01 (E6-7)	R - W-B	Ignition switch ON	9 to 14 V
		Idling	Pulse generation (see page DI-140)
KNK1 (E5-1) - EKNK (E5-2)	W - B	Idling	Pulse generation (see page DI-154)
NE+ (E4-25) - NE- (E4-24)	R - P	Idling	Pulse generation (see page DI-159)
G2+ (E4-27) - NE- (E4-24)	Y - P	Idling	Pulse generation (see page DI-159)
IGT1 (E6-8) - E1 (E4-1)	G-B - BR	Idling	Pulse generation (see page DI-167)
IGT2 (E6-9) - E1 (E4-1)	L-B - BR		
IGT3 (E6-10) - E1 (E4-1)	G - BR		
IGT4 (E6-11) - E1 (E4-1)	B - BR		
IGF1 (E6-24) - E1 (E4-1)	R - BR	Ignition switch ON	4.5 to 5.5 V
		Idling	Pulse generation (see page DI-140)
PRG (E6-34) - E01 (E6-7)	P - W-B	Ignition switch ON	9 to 14 V
CCV (E6-27) - E01 (E6-7)	Y-G - W-B	Ignition switch ON	9 to 14 V
TBP (E8-4) - E01 (E6-7)	G-O (W) - W-B	Ignition switch ON	9 to 14 V
PTNK (E8-21) - E01 (E6-7)	L-B (W) - W-B	Ignition switch ON	2.9 to 3.7 V
		Apply vacuum 4.0 kPa (30 mmHg, 1.18 in.Hg)	Below 0.5 V
SPD (E7-17) - E1 (E4-1)	V-W (W) - BR	Ignition switch ON Rotate driving wheel slowly	Pulse generation (see page DI-234)
STA (E6-17) - E1 (E4-1)	B-R - BR	Cranking	6.0 V or more
STP (E7-19) - E1 (E4-1)	G-W (W) - BR	Ignition switch ON Brake pedal depressed	7.5 to 14 V
M+ (E4-3) - ME01 (E4-4)	R - W-B	Idling	Pulse generation (see page DI-262)
M- (E4-2) - ME01 (E4-4)	G - W-B		
TC (E8-20) - E1 (E4-1)	P-B (W) - BR	Ignition switch ON	9 to 14 V
FC (E8-10) - E01 (E6-7)	G-R (W) - W-B	Ignition switch ON	9 to 14 V
W (E8-11) - E1 (E4-1)	G-R - BR	Idling	9 to 14 V
		Ignition switch ON	Below 3.0 V
NSW (E6-16) - E1 (E4-1)*2	B-Y*2 - BR	Ignition switch ON Shift position in P or N position	0 to 3 V
ACMG (E7-2) - E01 (E6-7)	R-Y (W) - W-B	A/C magnetic clutch ON	Below 1.0 V

*1: The ECM terminal voltage is fixed regardless of the output voltage from the sensor.

*2: Only for A/T

G02641732

Fig. 36: ECM Terminals Voltage Chart (2 Of 2)
Courtesy of TOYOTA MOTOR SALES, U.S.A., INC.

DIAGNOSTIC TROUBLE CODE CHART

cardiagn.com

HINT:

Parameters listed in the chart may not be exactly the same as your readings due to the type of instrument or other factors.

If a malfunction code is displayed during the DTC check in check mode, check the circuit for the code listed in the table below.

DIAGNOSTIC TROUBLE CODES (DTC) LIST

DTC	Description
DTC P0010	Camshaft Position "A" Actuator Circuit (Bank 1)
DTC P0011	Camshaft Position "A" -Timing Over-Advanced or System Performance (Bank 1)
DTC P0012	Camshaft Position "A" -Timing Over- Retarded (Bank 1)
DTC P0016	Crankshaft Position - Camshaft Position Correlation (Bank 1 Sensor A)
DTC P0031, P0032	Oxygen (A/F) Sensor Heater Control Circuit Low/High (Bank 1 Sensor 1)
DTC P0037, P0038	Oxygen Sensor Heater Control Circuit Low/High (Bank 1 Sensor 2)
DTC P0100, P0102, P0103	Mass or Volume Air Flow Circuit Malfunction Low/High Input
DTC P0101	Mass or Volume Air Flow Circuit Range/Performance Problem
DTC P0110, P0112, P0113	Intake Air Temperature Circuit Low/High Input
DTC P0115, P0117, P0118	Engine Coolant Temperature Circuit Low/High Input
DTC P0116	Engine Coolant Temperature Circuit Range/Performance Problem
DTC P0120, P0122, P0123, P0220, P0222, P0223, P2135	Throttle/Pedal Position Sensor/Switch "A & B" Circuit Malfunction Low/High Input & Throttle/Pedal Position Sensor/Switch "A & B" Voltage Correction
DTC P0121	Throttle/Pedal Position Sensor/Switch "A" Circuit Range/Performance Problem
DTC P0125	Insufficient Coolant Temperature for Closed Loop Fuel Control
DTC P0128	Coolant Thermostat (Coolant Temperature Below Thermostat Regulating Temperature)
DTC P0136	Oxygen Sensor Circuit Malfunction (Bank 1 Sensor 2)
DTC P0171, P0172	System too Lean/Rich (Bank 1)
DTC P0300, P0301, P0302, P0303, P0304	Random/Multiple Cylinder Misfire Detected & Cylinder 1-4 Misfire Detected
DTC P0327, P0328	Knock Sensor 1 Circuit Low/High Input (Bank 1 or Single Sensor)
DTC P0335, P0339	Crankshaft Position Sensor "A" Circuit Malfunction/Intermittent
DTC P0340, P0341	Camshaft Position Sensor "A" Circuit Range/Performance (Bank 1 or Single Sensor)
DTC P0351, P0352, P0353, P0354	Ignition Coil "A-D" Primary/Secondary Circuit
DTC P0420	Catalyst System Efficiency Below Threshold (Bank 1)
DTC P0441, P0446, P2418	Evaporative Emission Control System Incorrect Purge Flow/Vent Control Circuit/Valve Control Circuit/Open

cardiagn.com

DTC P0442, P0455, P0456	Evaporative Emission Control System Leak Detected (Small Leak/Gross Leak/Very Small Leak)
DTC P0442, P0455, P0456	Evaporative Emission Control System Leak Detected (Small Leak/Gross Leak/Very Small Leak)
DTC P0451, P0452, P0453	Evaporative Emission Control System Pressure Sensor/Switch Range/Performance Low/High Input
DTC P0500	Vehicle Speed Sensor Malfunction
DTC P0504	Brake Switch "A"/"B" Correlation
DTC P0505	Idle Air Control System
DTC P0560	System Voltage
DTC P0604, P0606, P0607, P0657	Internal Control Module Random Access Memory (RAM) Error, ECM/PCM Processor, Control Module Performance & Actuator Supply Voltage Circuit/Open
DTC P0617	Starter Relay Circuit High
DTC P0630	VIN NOT PROGRAMMED OF MISMATCH - ECM/PCM
DTC P0705	Transmission Range Sensor Circuit Malfunction (PRNDL Input)
DTC P2102, P2103	Throttle Actuator Control Motor Circuit Low/High
DTC P2111, P2112	Throttle Actuator Control System-Stuck Open/Closed
DTC P2118	Throttle Actuator Control Motor Current Range/Performance
DTC P2119	Throttle Actuator Control Throttle Body Range Performance
DTC P2120, P2122, P2123, P2125, P2127, P2128, P2138	Throttle/Pedal Position Sensor/Switch "D & E" Circuit Low/High Input & Throttle/Pedal Position Sensor/Switch "D & E" Voltage Correlation
DTC P2121	Throttle/Pedal Position Sensor/Switch "D" Circuit Range/Performance
DTC P2195, P2196:	Oxygen (A/F) Sensor Signal Stuck Lean (Bank 1 Sensor 1) & Oxygen (A/F) Sensor Signal Stuck Rich (Bank 1 Sensor 1)
DTC P2238, P2239, P2252, P2253	Oxygen Sensor Pumping Current Circuit Low/High (for A/F sensor) (Bank 1 Sensor 1)
DTC P2238, P2239, P2252, P2253	Oxygen Sensor Pumping Current Circuit Low/High (for A/F sensor) (Bank 1 Sensor 1)
DTC P2A00	A/F Sensor Circuit Slow Response (Bank 1 Sensor 1)

For reference only the following charts also contain "Transmission Diagnostic Trouble Codes". Refer to the appropriate transmission diagnostic article for testing and repair: **AUTOMATIC TRANSAXLE (U140F) - DIAGNOSTICS** or **AUTOMATIC TRANSAXLE (U241E) - DIAGNOSTICS** .

cardiagn.com

DTC No.	Detection Item	Trouble Area	MIL*1	Memory
P0010	Camshaft Position "A" Actuator Circuit (Bank 1)	• Open or short in OCV circuit • OCV • ECM	○	○
P0011	Camshaft Position "A" -Timing Over- Advanced or System Performance (Bank 1)	• Valve timing • OCV • VVT controller assembly • ECM	○	○
P0012	Camshaft Position "A" -Timing Over- Retarded (Bank 1)	• Same as DTC No. P0011	○	○
P0016	Crankshaft Position - Camshaft Position Correlation (Bank 1 Sensor 1)	• Mechanical system (jumped tooth of timing chain, chain stretched) • ECM	○	○
P0031*2	Oxygen (A/F) Sensor Heater Circuit Low (Bank 1 Sensor 1)	• Open in heater circuit of A/F sensor • A/F sensor heater • EFI main relay • ECM	○	○
P0032*2	Oxygen (A/F) Sensor Heater Circuit High (Bank 1 Sensor 1)	• Short in heater circuit of A/F sensor • A/F sensor heater • EFI main relay • ECM	○	○
P0037	Oxygen Sensor Heater Control Circuit Low (Bank 1 Sensor 2)	• Open or short in heater circuit of heated oxygen sensor • Heated oxygen sensor heater • EFI main relay • ECM	○	○
P0038	Oxygen Sensor Heater Control Circuit High (Bank 1 Sensor 2)	• Same as DTC No. P0037	○	○
P0100	Mass or Volume Air Flow Circuit	• Open or short in MAF meter circuit • MAF meter • ECM	○	○
P0101	Mass or volume Air Flow Circuit Range/Performance Problem	• MAF meter	○	○
P0102	Mass or Volume Air Flow Circuit Low Input	• Open in MAF meter circuit • Short in ground circuit • MAF meter • ECM	○	○
P0103	Mass or Volume Air Flow Circuit High Input	• Short in MAF meter circuit (to +B circuit) • MAF meter • ECM	○	○
P0110	Intake Air Temperature Circuit	• Open or short in IAT sensor circuit • IAT sensor (built in MAF meter) • ECM	○	○
P0112	Intake Air Temperature Circuit Low Input	• Same as DTC No. P0110	○	○

*2: Although the title (DTC description) says "oxygen sensor", this DTC is related to the "A/F sensor".

G02912385

Fig. 37: Diagnostic Trouble Code Chart (1 Of 7)
Courtesy of TOYOTA MOTOR SALES, U.S.A., INC.

cardiagn.com

P0113	Intake Air Temperature Circuit High Input	• Same as DTC No. P0110	○	○
P0115	Engine Coolant Temperature Circuit	• Open or short in ECT sensor circuit • ECT sensor • ECM	○	○
P0116	Engine Coolant Temperature Circuit Range/Performance Problem	• Cooling system • ECT sensor	○	○
P0117	Engine Coolant Temperature Circuit Low Input	• Same as DTC No. P0115	○	○
P0118	Engine Coolant Temperature Circuit High Input	• Same as DTC No. P0115	○	○
P0120	Throttle/Pedal Position Sensor/Switch "A" Circuit	• Throttle position sensor (built in throttle body) • ECM	○	○
P0121	Throttle/Pedal Position Sensor/Switch "A" Circuit Range/Performance Problem	• Throttle body assy (Throttle position sensor)	○	○
P0122	Throttle/Pedal Position Sensor/Switch "A" Circuit Low Input	• Throttle position sensor (built in throttle body) • Short in VTA1 circuit • Open in VC circuit • ECM	○	○
P0123	Throttle/Pedal Position Sensor/Switch "A" Circuit High Input	• Throttle position sensor (built in throttle body) • Open in VTA1 circuit • Open in E2 circuit • VC and VTA1 circuit are short-circuited • ECM	○	○
P0125	Insufficient Coolant Temperature for Closed Loop Fuel Control	• Cooling system • ECT sensor • Thermostat	○	○
P0128	Coolant Thermostat (Coolant Temperature Below Thermostat Regulating Temperature)	• Thermostat • Cooling system • ECT sensor • ECM	○	○
P0136	Oxygen Sensor Circuit Malfunction (Bank 1 Sensor 2)	• Open or short in heated oxygen sensor circuit • Heated oxygen sensor • Heated oxygen sensor heater • EFI main relay	○	○
P0171	System Too Lean (Bank 1)	• Air induction system • Injector blockage • MAF meter • ECT sensor • Fuel pressure • Gas leakage in exhaust system • Open or short in A/F sensor circuit • A/F sensor • A/F sensor heater • EFI main relay • A/F sensor heater and EFI main relay circuit • PCV hose connection • PCV hose	○	○

G02912386

Fig. 38: Diagnostic Trouble Code Chart (2 Of 7)
Courtesy of TOYOTA MOTOR SALES, U.S.A., INC.

cardiagn.com

P0172	System Too Rich (Bank 1)	• Injector leak, blockage • MAF meter • ECT sensor • Ignition system • Fuel pressure • Gas leakage in exhaust system • Open or short in A/F sensor circuit • A/F sensor • A/F sensor heater • A/F sensor heater and EFI main relay circuit • EFI main relay	○	○
P0220	Throttle/Pedal Position Sensor/ Switch "B" Circuit	• Throttle position sensor (built in throttle body) • ECM	○	○
P0222	Throttle/Pedal Position Sensor/ Switch "B" Circuit Low Input	• Throttle position sensor (built in throttle body) • Short in VTA2 circuit • Open in VC circuit • ECM	○	○
P0223	Throttle/Pedal Position Sensor/ Switch "B" Circuit High Input	• Throttle position sensor (built in throttle body) • Open in VTA2 circuit • Open in E2 circuit • VC and VTA2 circuit are short-circuited • ECM	○	○
P0300	Random/Multiple Cylinder Misfire Detected	• Open or short in engine wire • Connector connection • Vacuum hose connection • Ignition system • Injector • Fuel pressure • MAF meter • ECT sensor • Compression pressure • Valve clearance • Valve timing • PCV hose connection • PCV hose • ECM	-	○
P0301	Cylinder 1 Misfire Detected	• Same as DTC No. P0300	-	○
P0302	Cylinder 2 Misfire Detected	• Same as DTC No. P0300	-	○
P0303	Cylinder 3 Misfire Detected	• Same as DTC No. P0300	-	○
P0304	Cylinder 4 Misfire Detected	• Same as DTC No. P0300	-	○
P0325	Knock Sensor 1 Circuit (Bank 1 or Single Sensor)	• Open or short in knock sensor circuit • Knock sensor (under-torqued or loose) • ECM	○	○
P0327	Knock Sensor 1 Circuit Low Input (Bank 1 or Single Sensor)	• Short in knock sensor circuit • Knock sensor • ECM	○	○
P0328	Knock Sensor 1 Circuit High Input (Bank 1 or Single Sensor)	• Open in knock sensor circuit • Knock sensor • ECM	○	○

G02912387

Fig. 39: Diagnostic Trouble Code Chart (3 Of 7)
Courtesy of TOYOTA MOTOR SALES, U.S.A., INC.

cardiagn.com

P0335	Crankshaft Position Sensor "A" Circuit	• Open or short in crankshaft position sensor circuit • Crankshaft position sensor • Single plate (crankshaft position sensor plate No. 1) • ECM	○	○
P0339	Crankshaft Position Sensor "A" Circuit Intermittent	• Same as DTC No. P0335	-	○
P0340	Camshaft Position Sensor "A" Circuit (Bank 1 or Single Sensor)	• Open or short in camshaft position sensor circuit • Camshaft position sensor • Camshaft timing gear • Timing chain has a jumped tooth • ECM	○	○
P0341	Camshaft Position Sensor "A" Circuit Range/Performance (Bank 1 or Single Sensor)	• Same as DTC No. P0340	○	○
P0351	Ignition Coil "A" Primary/Secondary Circuit	• Ignition system • Open or short in IGF and IGT1 to 4 circuits from ignition coil with igniter assy to ECM • No.1 - 4 ignition coil assy • ECM	○	○
P0352	Ignition Coil "B" Primary/Secondary Circuit	• Same as DTC No. P0351	○	○
P0353	Ignition Coil "C" Primary/Secondary Circuit	• Same as DTC No. P0351	○	○
P0354	Ignition Coil "D" Primary/Secondary Circuit	• Same as DTC No. P0351	○	○
P0420	Catalyst System Efficiency Below Threshold (Bank 1)	• Gas leakage on exhaust system • A/F sensor • Heated oxygen sensor • Exhaust manifold converter (Three way catalytic converter)	○	○
P0441	Evaporative Emission Control System Incorrect Purge Flow	• Fuel tank cap incorrectly installed • Fuel tank cap has cracks or is damaged • Vacuum hose has cracks, holes, or is blocked, damaged or disconnected ((1), (2), (3), (4), (5), (6), (7), (8), (9), (10) and (11) in circuit description) • Open or short in vapor pressure sensor circuit • Vapor pressure sensor • Open or short in EVAP VSV circuit • EVAP VSV • Open or short in CCV circuit • CCV • Pressure switching valve • Fuel tank has cracks, holes, or is damaged • Charcoal canister has cracks, holes, or is damaged • Fuel tank over fill check valve cracks, or is damaged • ECM	○	○

G02912388

Fig. 40: Diagnostic Trouble Code Chart (4 Of 7)
Courtesy of TOYOTA MOTOR SALES, U.S.A., INC.

cardiagn.com

P0442	Evaporative Emission Control System Leak Detected (Small Leak)	• Hose or tube cracked, hole, damaged or loose seal ((3) or (9) in Fig. 1) • Fuel tank cap incorrectly installed • Fuel tank cap cracked or damaged • Vacuum hose cracked, holed, blocked, damaged or disconnected ("1, 2, 4, 5, 6, 7, 8, 10 and 11" in the circuit description) • Fuel tank cracked, holed or damaged • Charcoal canister cracked, holed or damaged • Open or short in vapor pressure sensor circuit • Vapor pressure sensor • Fuel tank over fill check valve cracked or damaged • ECM	○	○
P0446	Evaporative Emission Control System Vent Control Circuit	• Same as DTC No. P0441	○	○
P0451	Evaporative Emission Control System Pressure Sensor/Switch Range/Performance	• Open or short in vapor pressure sensor circuit • Vapor pressure sensor • ECM	○	○
P0452	Evaporative Emission Control System Pressure Sensor/Switch Low Input	• Same as DTC No. P0451	○	○
P0453	Evaporative Emission Control System Pressure Sensor/Switch High Input	• Same as DTC No. P0451	○	○
P0455	Evaporative Emission Control System Leak Detected (Gross Leak)	• Same as DTC No. P0442	○	○
P0456	Evaporative Emission Control System Leak Detected (Very Small Leak)	• Same as DTC No. P0442	○	○
P0500	Vehicle Speed Sensor "A"	• Open or short in speed sensor circuit • Vehicle speed sensor • Combination meter • ECM	○	○
P0504	Brake Switch Correlation	• Short in stop light switch signal circuit • STOP fuse • Stop light switch • ECM	-	○
P0505	Idle Control System	• ETCS • Air induction system • PCV hose connection • ECM	○	○
P0560	System Voltage	• Open in back-up power source circuit • ECM	○	○
P0604	Internal Control Module Random Access Memory (RAM) Error	• ECM	○	○
P0606	ECM/PCM Processor	• ECM	○	○
P0607	Control Module Performance	• ECM	○	○

G02912389

Fig. 41: Diagnostic Trouble Code Chart (5 Of 7)
Courtesy of TOYOTA MOTOR SALES, U.S.A., INC.

cardiagn.com

P0617	Starter Relay Circuit High	• Short in PNP switch (A/T) or clutch start switch (M/T) • PNP switch (A/T) • Clutch start switch (M/T) • Ignition switch • ECM	○	○
P0657	Actuator Supply Voltage Circuit / Open	• ECM	○	○
P0705	Transmission Range Sensor Circuit Malfunction (PRNDL Input)	• Short in PNP switch circuit • PNP switch • ECM	○	○
P0710	Transmission Fluid Temperature Sensor "A" circuit	• Electronic controlled automatic transmission (ECT)	○	○
P0711	Transmission Fluid Temperature Sensor "A" Performance	• Electronic controlled automatic transmission (ECT)	○	○
P0712	Transmission Fluid Temperature Sensor "A" Circuit Low Input	• Electronic controlled automatic transmission (ECT)	○	○
P0713	Transmission Fluid Temperature Sensor "A" Circuit High Input	• Electronic controlled automatic transmission (ECT)	○	○
P0717	Input/Turbine Speed Sensor "A" Circuit No Signal	• Electronic controlled automatic transmission (ECT)	○	○
P0724	Brake Switch "B" Circuit High	• Electronic controlled automatic transmission (ECT)	○	○
P0741	Torque Converter Clutch Circuit Performance or Stuck Off	• Electronic controlled automatic transmission (ECT)	○	○
P0746	Pressure Control Solenoid "A" Performance (Shift Solenoid Valve SL1)	• Electronic controlled automatic transmission (ECT)	○	○
P0748	Pressure Control Solenoid "A" Electrical (Shift Solenoid Valve SL1)	• Electronic controlled automatic transmission (ECT)	○	○
P0766	Shift Solenoid "D" Performance (Shift Solenoid Valve S4)	• Electronic controlled automatic transmission (ECT)	○	○
P0776	Pressure Control Solenoid "B" Performance (Shift Solenoid Valve SL2)	• Electronic controlled automatic transmission (ECT)	○	○
P0778	Pressure Control Solenoid "B" Electrical (Shift Solenoid Valve SL2)	• Electronic controlled automatic transmission (ECT)	○	○
P0793	Intermediate Shaft Speed Sensor "A" Circuit No Signal	• Electronic controlled automatic transmission (ECT)	○	○
P0982	Shift Solenoid "D" Control Low	• Electronic controlled automatic transmission (ECT)	○	○
P0983	Shift Solenoid "D" Control High	• Electronic controlled automatic transmission (ECT)	○	○
P2102	Throttle Actuator Control Motor Circuit Low	• Open in throttle actuator circuit • Throttle actuator • ECM	○	○
P2103	Throttle Actuator Control Motor Circuit High	• Short in throttle actuator circuit • Throttle actuator • Throttle valve • Throttle body assy • ECM	○	○

G02912390

Fig. 42: Diagnostic Trouble Code Chart (6 Of 7)
Courtesy of TOYOTA MOTOR SALES, U.S.A., INC.

cardiagn.com

P2111	Throttle Actuator Control System - Stuck Open	• Throttle actuator circuit • Throttle actuator • Throttle body • Throttle valve	○	○
P2112	Throttle Actuator Control System - Stuck Closed	• Same as DTC No. P2111	○	○
P2118	Actuator Control Motor Current Range/Performance	• Open in ETCS power source circuit • ECM	○	○
P2119	Throttle Actuator Control Throttle Body Range/Performance	• ETCS • ECM	○	○
P2120	Throttle/Pedal Position Sensor/ Switch "D" Circuit	• Open or short in accelerator pedal position sensor circuit • Accelerator pedal position sensor • ECM	○	○
P2121	Throttle/Pedal Position Sensor/ Switch "D" Circuit Range/Performance	• Accelerator pedal position sensor circuit • Accelerator pedal position sensor • ECM	○	○
P2122	Throttle/Pedal Position Sensor/ Switch "D" Circuit Low Input	• Same as DTC No. P2120	○	○
P2123	Throttle/Pedal Position Sensor/ Switch "D" Circuit High Input	• Same as DTC No. P2120	○	○
P2125	Throttle/Pedal Position Sensor/ Switch "E" Circuit	• Same as DTC No. P2120	○	○
P2127	Throttle/Pedal Position Sensor/ Switch "E" Circuit Low Input	• Same as DTC No. P2120	○	○
P2128	Throttle/Pedal Position Sensor/ Switch "E" Circuit High Input	• Same as DTC No. P2120	○	○
P2135	Throttle Pedal Position Sensor/ Switch "A"/"B" Voltage Correlation	• Same as DTC No. P0120	○	○
P2138	Throttle Pedal Position Sensor/ Switch "D"/"E" Voltage Correlation	• Same as DTC No. P2120	○	○
P2195*2	Oxygen (A/F) Sensor Signal Stuck Lean (Bank 1 Sensor 1)	• Open or short in A/F sensor circuit • A/F sensor • A/F sensor heater • EFI main relay • A/F sensor heater and EFI main relay circuit • Air induction system • Fuel pressure • Injector • ECM	○	○
P2196*2	Oxygen (A/F) Sensor Signal Stuck Rich (Bank 1 Sensor 1)	• Same as DTC No. P2195	○	○
P2238*2	Oxygen Sensor Pumping Current Circuit Low (for A/F Sensor) (Bank 1 Sensor 1)	• Open or short in A/F sensor circuit • A/F sensor • A/F sensor heater • EFI main relay • A/F sensor heater and EFI main relay circuit • ECM	○	○
P2239*2	Oxygen Sensor Pumping Current Circuit High (for A/F Sensor) (Bank 1 Sensor 1)	• Same as DTC No. P2238	○	○
P2252*2	Oxygen Sensor Reference Ground Circuit Low (for A/F Sensor) (Bank 1 Sensor 1)	• Same as DTC No. P2238	○	○
P2253*2	Oxygen Sensor Reference Ground Circuit High (for A/F Sensor) (Bank 1 Sensor 1)	• Same as DTC No. P2238	○	○
P2418	Evaporative Emission Control System Valve control Circuit/ Open	• Same as DTC No. P0441	○	○
P2A00	A/F Sensor Circuit Slow Response (Bank 1 Sensor 1)	• Open or short in A/F sensor circuit • A/F sensor • A/F sensor heater • EFI main relay • A/F sensor heater and EFI main relay circuit • Air induction system • Fuel pressure • Injector • ECM	○	○
P2769	Torque Converter Clutch Solenoid Circuit Low	• Electronic controlled automatic transmission (ECT)	○	○
P2770	Torque Converter Clutch Solenoid Circuit High	• Electronic controlled automatic transmission (ECT)	○	○
B2799	Engine Immobilizer System Malfunction	• Immobilizer system malfunction	-	○

*1: MIL illuminates

*2: Although the title (DTC description) says "oxygen sensor", this DTC is related to the "A/F sensor".

G02912391

Fig. 43: Diagnostic Trouble Code Chart (7 Of 7)
Courtesy of TOYOTA MOTOR SALES, U.S.A., INC.

PARTS LOCATION

cardiagn.com

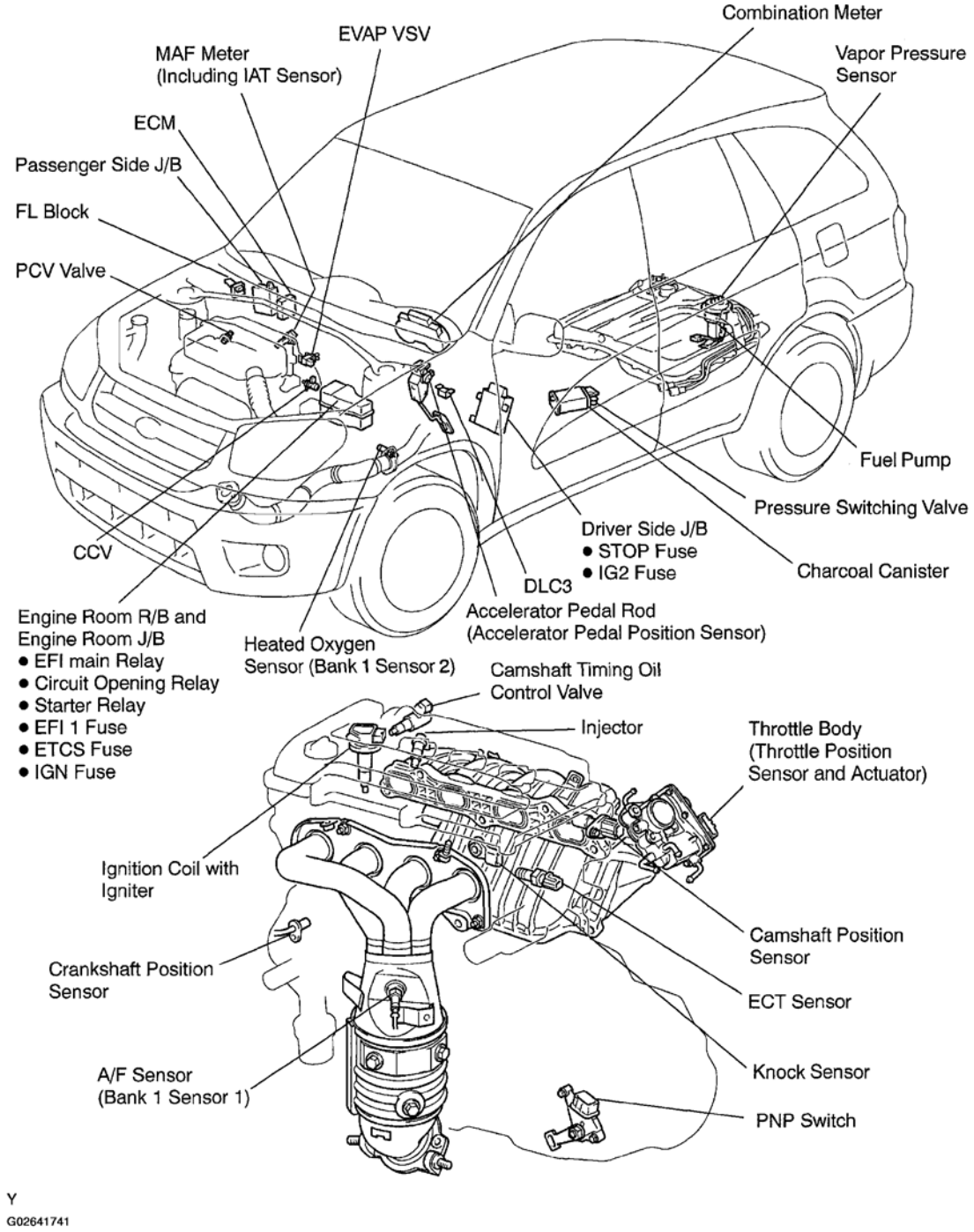

Fig. 44: Identifying Location Of Engine Management Electrical Components
Courtesy of TOYOTA MOTOR SALES, U.S.A., INC.

CIRCUIT INSPECTION

DTC P0010: CAMSHAFT POSITION "A" ACTUATOR CIRCUIT (BANK 1)

cardiagn.com

CIRCUIT DESCRIPTION

The Variable Valve Timing (VVT) system includes the ECM, the Oil Control Valve (OCV) and the VVT controller. The ECM sends a target duty-cycle control signal to the OCV. This control signal, applied to the OCV, regulates the oil pressure supplied to the VVT controller. Camshaft timing control is performed based on engine operation conditions such as intake air volume, throttle position and engine coolant temperature.

The ECM controls the OCV based on the signals output from several sensors. The VVT controller regulates the intake camshaft angle using oil pressure through the OCV. As result, the relative position between the camshaft and the crankshaft is optimized. Also, the engine torque improves, fuel economy improves, and exhaust emissions decrease. The ECM detects the actual valve timing using signals from the camshaft position sensor and the crankshaft position sensor. The ECM performs feedback control and verifies target valve timing.

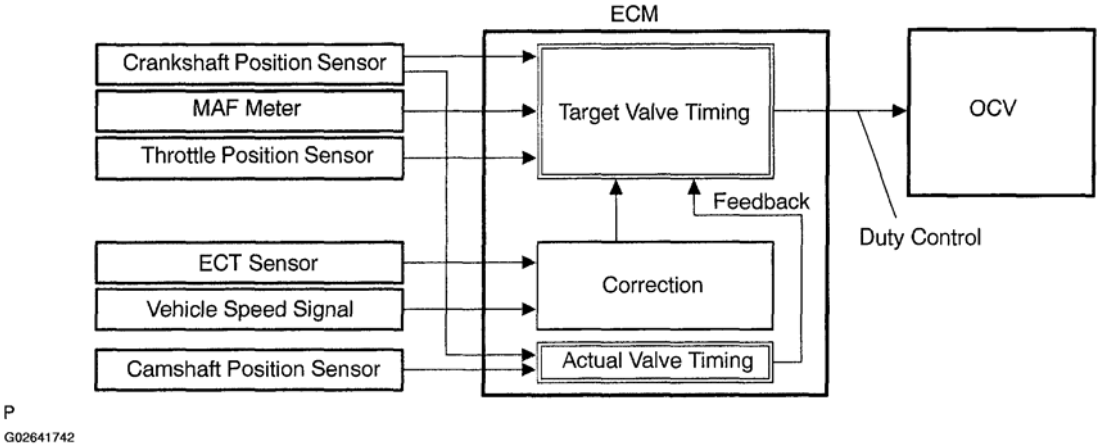

Fig. 45: Description - Camshaft Position "A" Actuator Circuit
Courtesy of TOYOTA MOTOR SALES, U.S.A., INC.

DTC No.	DTC Detection Condition	Trouble Area
P0010	Open or short in OCV circuit	• Open or short in OCV circuit • OCV • ECM

G02641743

Fig. 46: DTC P0010 - DTC Detection Condition Chart
Courtesy of TOYOTA MOTOR SALES, U.S.A., INC.

MONITOR DESCRIPTION

After the ECM sends the "target" duty-cycle signal to the OCV, the ECM monitors the OCV current to establish an "actual" duty-cycle. When the actual duty-cycle ratio varies from the target duty-cycle ratio, the ECM sets a DTC.

MONITOR STRATEGY

cardiagn.com

MONITOR STRATEGY

Related DTCs	**P0010: VVT OCV range check**
Required sensor([A-z])/([a-z]+) (Main)	VVT OCV
Required sensors/components (Related)	-
Frequency of operation	Continuous
Duration	1 sec.
MIL operation	Immediate
Sequence of operation	None

TYPICAL ENABLING CONDITIONS

TYPICAL ENABLING CONDITIONS

The monitor will run whenever the following DTCs are not present	**None**
Battery voltage	11 to 13 V
Target duty ratio for the OCV	70 % or less
Starter	OFF
Current cut status for the OCV	Not cut

TYPICAL MALFUNCTION THRESHOLDS

TYPICAL MALFUNCTION THRESHOLDS

Either of the following condition is set:	
OCV duty ratio	100 % (always ON) despite the target duty ratio is less than 70 %
OCV duty ratio when ECM supplies current to OCV	3 % or less despite the ECM supplying the current to the OCV

COMPONENT OPERATING RANGE

COMPONENT OPERATING RANGE

VVT OCV duty ratio	3 to 100 %

WIRING DIAGRAM

cardiagn.com

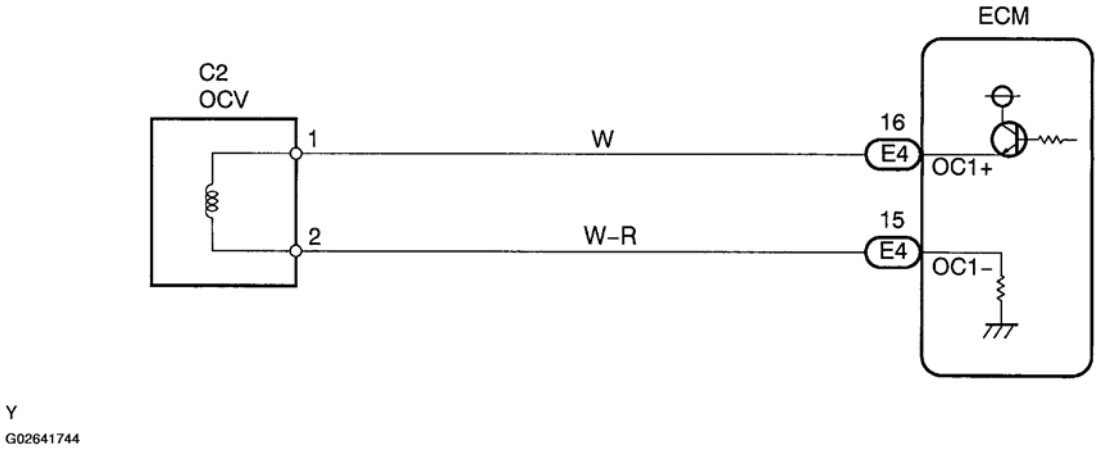

Fig. 47: Wiring Diagram - Oil Control Valve (OCV)
Courtesy of TOYOTA MOTOR SALES, U.S.A., INC.

INSPECTION PROCEDURE

HINT:

Read freeze frame data using the hand-held tester or the OBD II scan tool. Freeze frame data records the engine conditions when a malfunction is detected. When troubleshooting, freeze frame data can help determine if the vehicle was running or stopped, if the engine was warmed up or not, if the air-fuel ratio was lean or rich, and other data from the time the malfunction occurred.

Hand-held tester:

1. **Check operation of VVT system.**

   PREPARATION:

   a. Connect the hand-held tester to the DLC3.
   b. Start the engine and warm it up.
   c. Turn ON the ignition switch. Push the hand-held tester main switch.
   d. Enter the following menus: DIAGNOSIS / ENHANCED OBD II / ACTIVE TEST / VVT CTRL B1.

   CHECK:

   Check the engine speed when operating the OCV by using the hand-held tester.

   OK:

   VVT system is OFF (OCV is OFF): Normal engine speed

cardiagn.com

VVT system is ON (OCV is ON): Rough idle or engine stalled

OK: Check for intermittent problems (see PRE-CHECK).
NG: Go To Next Step.

2. **Check operation of OCV.**

PREPARATION:

a. Start the engine and warm it up.
b. Disconnect the OCV connector.
c. Apply battery positive voltage to the terminals of the OCV.

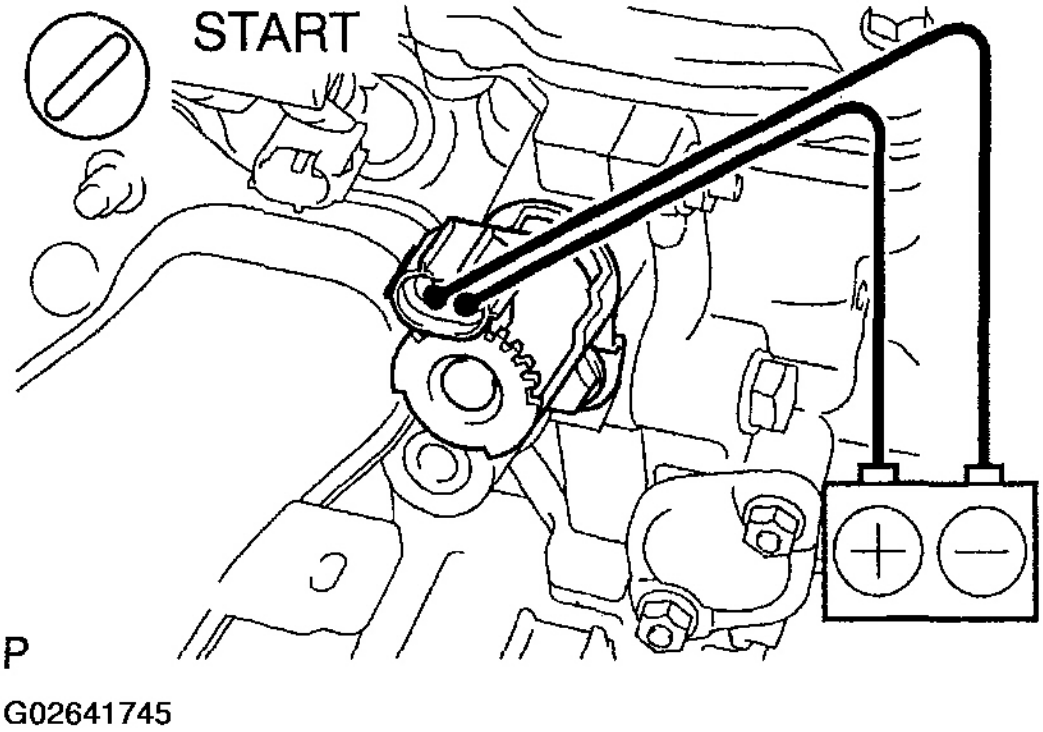

Fig. 48: Applying Battery Positive Voltage To Terminals Of OCV
Courtesy of TOYOTA MOTOR SALES, U.S.A., INC.

CHECK:

Check the engine speed.

OK:

cardiagn.com

Rough idle or engine stalled

NG: Replace OCV (see COMPONENTS).

OK: Go To Next Step.

3. **Check voltage between terminals OC1+ and OC1- of ECM connector.**

Reference: INSPECTION USING OSCILLOSCOPE

During idling, check the waveform between terminals OC1+ and OC1- of the ECM connector.

HINT:

The correct waveform is as shown.

cardiagn.com

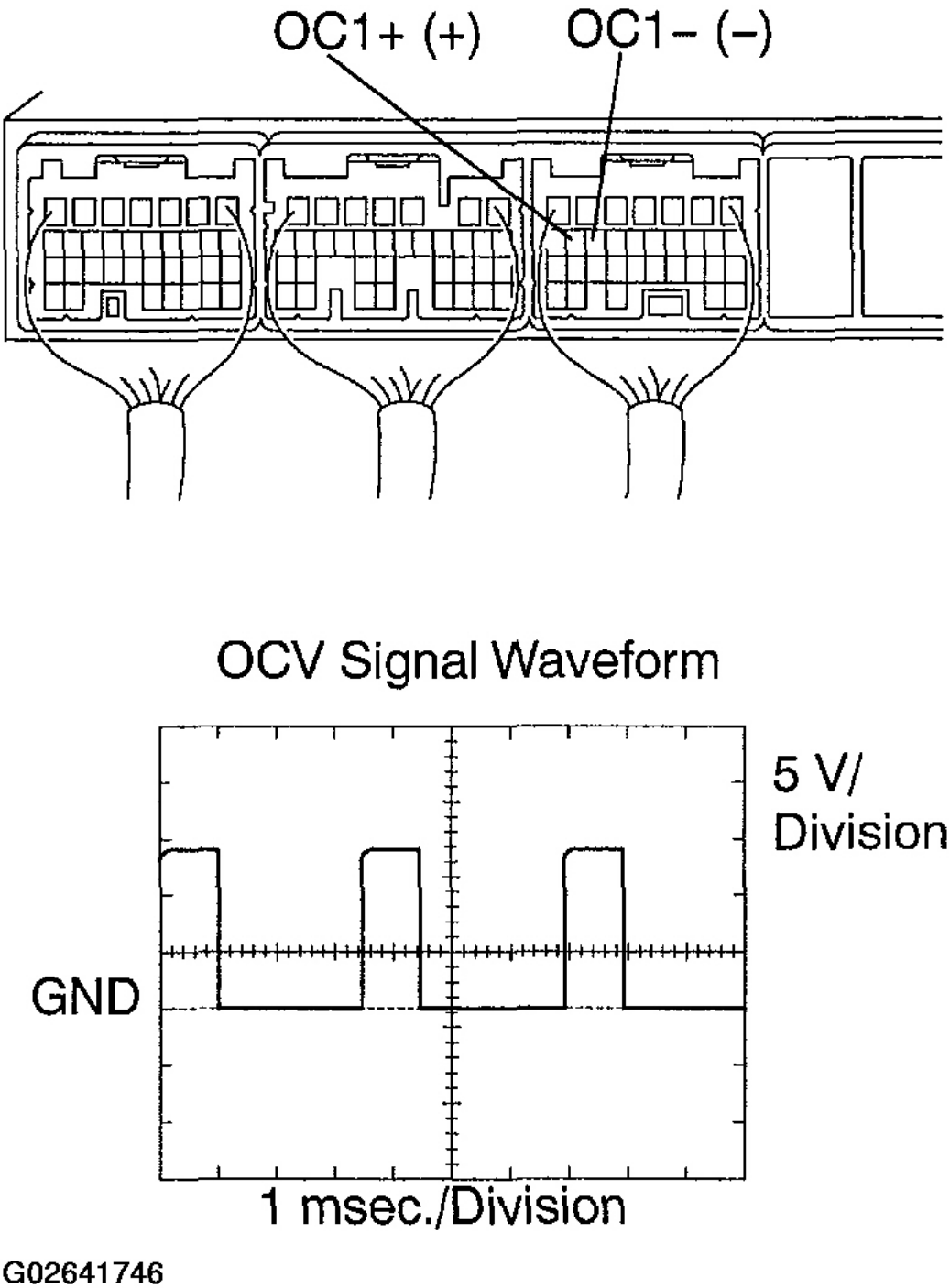

Fig. 49: Signal Waveform Graph (Between Terminals OC1+ & OC1- Of ECM Connector)
Courtesy of TOYOTA MOTOR SALES, U.S.A., INC.

cardiagn.com

NG: Replace ECM (see ENGINE CONTROL MODULE (ECM)).

OK: Go To Next Step.

4. **Check for open and short in wire harness between OCV and ECM (see DTC P0011 CAMSHAFT POSITION "A" -TIMING OVER-ADVANCED OR SYSTEM PERFORMANCE (BANK 1)).**

   NG: Repair or replace.

   OK: Check for intermittent problems (see PRE-CHECK).

OBD II scan tool (excluding hand-held tester):

1. **Check operation of OCV.**

   PREPARATION:

   a. Start the engine and warm it up.
   b. Disconnect the OCV connector.
   c. Apply battery positive voltage to the terminals of the OCV.

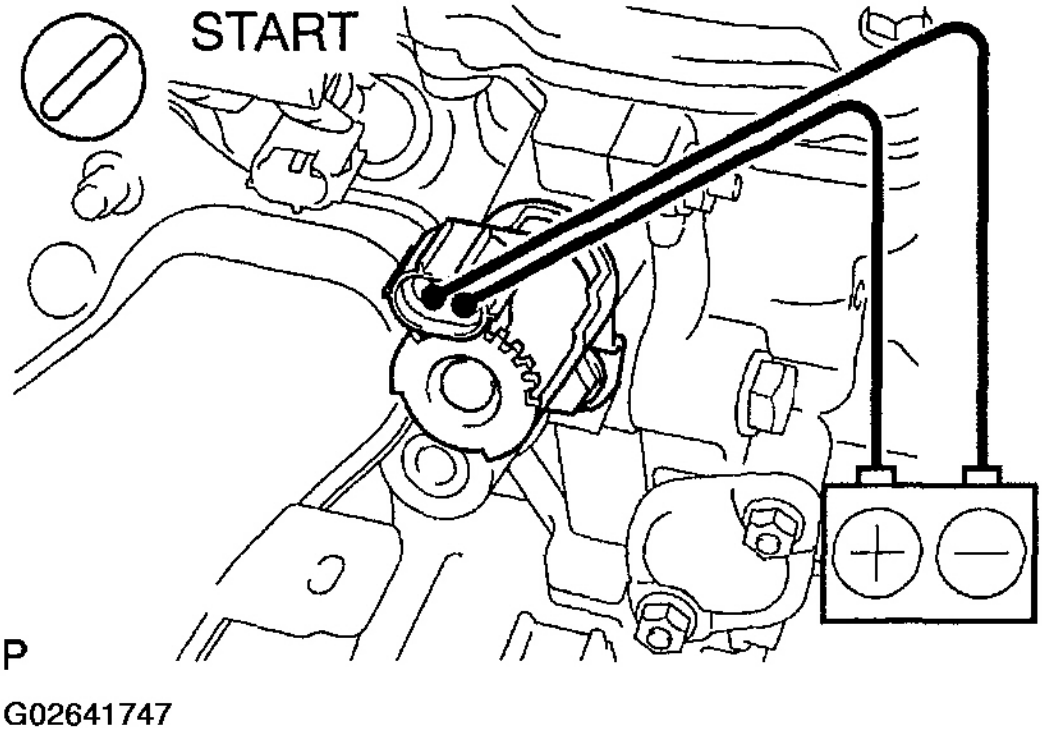

Fig. 50: Applying Battery Positive Voltage To Terminals Of OCV
Courtesy of TOYOTA MOTOR SALES, U.S.A., INC.

cardiagn.com

CHECK:

Check the engine speed.

OK:

Rough idle or engine stalled

NG: Replace OCV (see COMPONENTS).
OK: Go To Next Step.

2. **Check voltage between terminals OC1+ and OC1- of ECM connector.**

Reference: INSPECTION USING OSCILLOSCOPE

During idling, check the waveform between terminals OC1+ and OC1- of the ECM connector.

HINT:

The correct waveform is as shown.

cardiagn.com

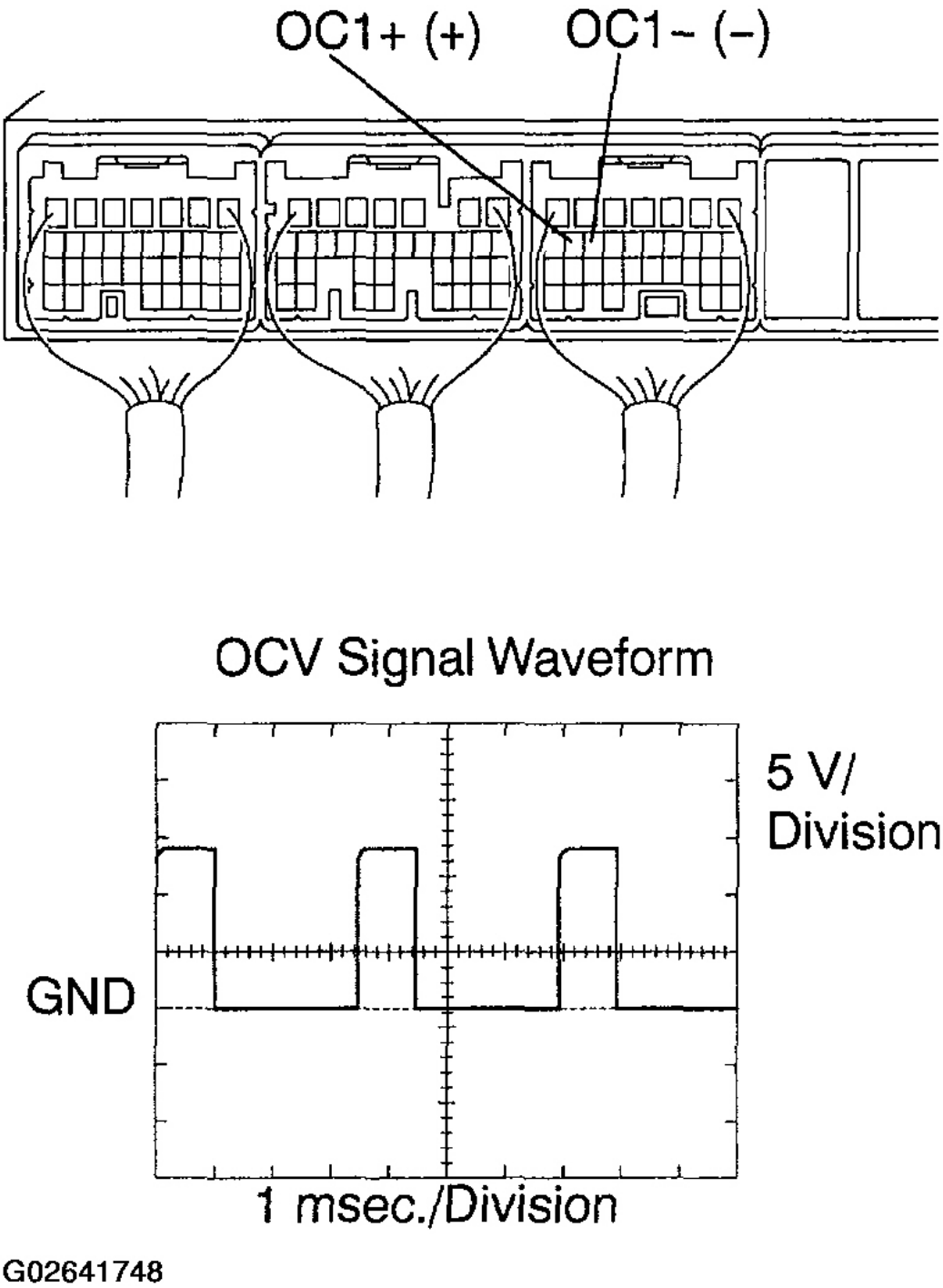

Fig. 51: Signal Waveform Graph (Between Terminals OC1+ & OC1- Of ECM Connector)
Courtesy of TOYOTA MOTOR SALES, U.S.A., INC.

cardiagn.com

NG: Replace ECM (see ENGINE CONTROL MODULE (ECM)).

OK: Go To Next Step.

3. **Check for open and short in wire harness between OCV and ECM (see DTC P0011 CAMSHAFT POSITION "A" -TIMING OVER-ADVANCED OR SYSTEM PERFORMANCE (BANK 1)).**

   NG: Repair or replace harness and connector.

   OK: Check for intermittent problems (see PRE-CHECK).

DTC P0011: CAMSHAFT POSITION "A" -TIMING OVER-ADVANCED OR SYSTEM PERFORMANCE (BANK 1)

For testing, refer to **DTC P0012: CAMSHAFT POSITION "A" -TIMING OVER-RETARDED (BANK 1)**.

DTC P0012: CAMSHAFT POSITION "A" -TIMING OVER-RETARDED (BANK 1)

CIRCUIT DESCRIPTION

DTC No.	DTC Detection Condition	Trouble Area
P0011	After engine is warmed up and engine speed is at 550 to 4,000 rpm, condition (a) or (b) continues (1trip detection logic) (a) Valve timing does not change from current valve timing (b) Current valve timing is fixed (Problem of advanced OCV)	•Valve timing •OCV •VVT controller assembly •ECM
P0012	After engine is warmed up and engine speed is at 550 to 4,000 rpm, condition (a) or (b) continues (2trip detection logic) (a) Valve timing does not change from current valve timing (b) Current valve timing is fixed (Problem of retarded OCV)	

G02641749

Fig. 52: DTC P0011 & P0012 - Problem Symptom Diagnostic Chart
Courtesy of TOYOTA MOTOR SALES, U.S.A., INC.

MONITOR DESCRIPTION

The ECM optimizes the valve timing using the Variable Valve Timing (VVT) system to control the intake valve camshaft. The VVT system includes the ECM, the Oil Control Valve (OCV) and the VVT controller. The ECM sends a target "duty-cycle" control signal to the OCV. This control signal, applied to the OCV, regulates the oil pressure supplied to the VVT controller. The VVT controller can advance or retard the intake valve camshaft.

Example:

A DTC will set if: 1) the difference between the target and actual valve timing is more than 5 degrees of the camshaft angle (CA) and the condition continues for more than 4.5 seconds; or 2) the OCV is forcibly activated 63 times or more.

Advanced cam DTCs are subject to "1 trip" detection logic.

cardiagn.com

Retarded cam DTCs are subject to "2 trip" detection logic.

VVT System: P0011 and P0012

MONITOR DESCRIPTION (VVT SYSTEM: P0011 AND P0012)

Related DTCs	P0011: Advanced camshaft timing
Related DTCs	P0012: Retarded camshaft timing
Required sensors/components (Main)	VVT OCV and VVT actuator
Required sensors/components (Related)	CKP, CMP and ECT sensors
Frequency of operation	Once per driving cycle
Duration	Within 10 sec.
MIL operation	P0011: Immediate P0012: 2 driving cycles
Sequence of operation	None

TYPICAL ENABLING CONDITIONS

TYPICAL ENABLING CONDITIONS

The monitor will run whenever the following DTCs are not present	**See PRE-CHECK**
Battery voltage	11 V or more
Engine RPM	550 to 4,000 rpm
ECT	75 to 100°C (167 to 212°F)

TYPICAL MALFUNCTION THRESHOLDS

TYPICAL MALFUNCTION THRESHOLDS

Response of valve timing	**1 second /°CA or more**
Difference between "target" and "actual" camshaft timing	More than 5°CA (Crankshaft Angle)
Camshaft timing change for 5 sec.	Within 5°CA

If the difference between "target" and "actual" camshaft timing is larger than the specified value, the ECM operates the VVT actuator. Then, the ECM monitors the camshaft timing change for 5 seconds.

WIRING DIAGRAM

Refer to wiring diagram under **DTC P0010 CAMSHAFT POSITION "A" ACTUATOR CIRCUIT (BANK 1)**.

INSPECTION PROCEDURE

HINT:

- If DTC P0011 or P0012 is displayed, check the VVT system circuit.
- Read freeze frame data using the hand-held tester or the OBD II scan tool. Freeze frame data records the engine conditions when a malfunction is detected. When troubleshooting, freeze frame data can help

cardiagn.com

determine if the vehicle was running or stopped, if the engine was warmed up or not, if the air-fuel ratio was lean or rich, and other data from the time the malfunction occurred.

Hand-held tester:

1. **Check valve timing (check for loose or jumped tooth of timing chain) (see INSTALLATION).**

   NG: Adjust valve timing.

   OK: Go To Next Step.

2. **Check operation of OCV.**

   PREPARATION:

   a. Connect the hand-held tester to the DLC3.
   b. Start the engine and warm it up.
   c. Turn ON the ignition switch. Push the hand-held tester main switch.
   d. Enter the following menus: DIAGNOSIS / ENHANCED OBD II / ACTIVE TEST / VVT CTRL B1

   CHECK:

   Check the engine speed when operating the OCV using the hand-held tester.

   OK:

   OCV is OFF: Normal engine speed

   OCV is ON: Rough idle or engine stall

   OK: Go to step 4

   NG: Go To Next Step.

3. **Check if DTC outputs reoccur.**

   PREPARATION:

   a. Erase the DTC(s) using one of the following methods: 1) use the hand-held tester, 2) disconnect the battery terminals for more than 60 seconds, or 3) remove the EFI1 and ETCS fuses for more than 60 seconds.

      HINT:

      After disconnecting the battery terminals, perform the "INITIALIZE" procedure (see **PRE-CHECK**).

   b. Start the engine and warm it up.

cardiagn.com

c. Drive the vehicle around for 10 minutes or more.

CHECK:

Read output DTC using the hand-held tester.

OK:

DTC P0011 or P0012 is not stored.

OK: VVT system is OK.*

HINT:

*: DTCs P0011 and P0012 are output when a foreign object in the engine oil enters the system. These codes will stay even if the system returns to normal after a short time.

Foreign objects are filtered out by the oil filter.

NG: Go To Next Step.

4. **Check voltage between terminals OC1 + and OC1 - of ECM connector.**

Reference: INSPECTION USING OSCILLOSCOPE

During idling. Check the waveform between terminals OC1 + and OC1 - of the ECM connector.

HINT:

The correct waveform is as shown in the illustration.

cardiagn.com

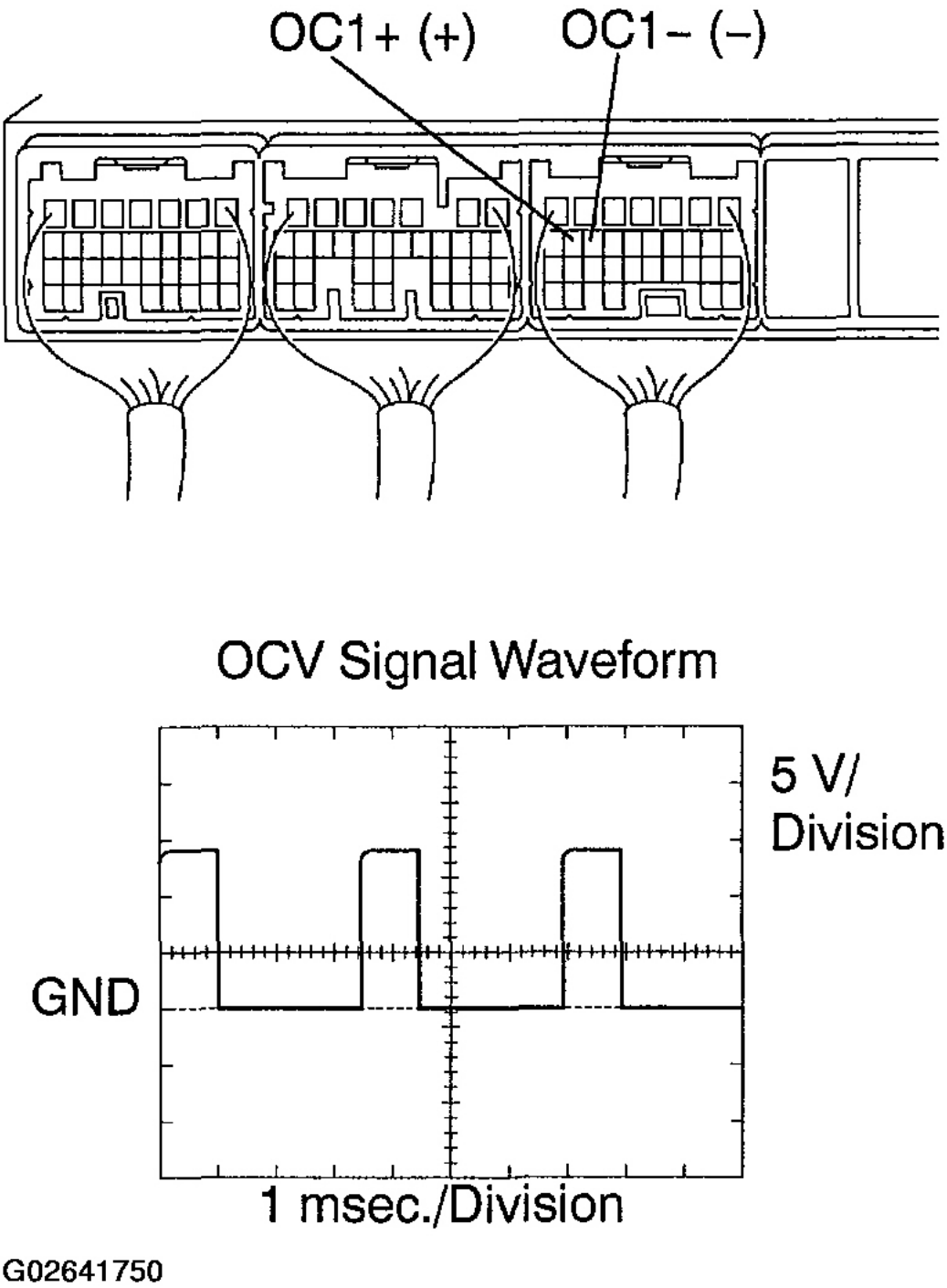

Fig. 53: Identifying Terminals OC1+ & OC1- Of ECM Connector & Signal Waveform Graph
Courtesy of TOYOTA MOTOR SALES, U.S.A., INC.

cardiagn.com

NG: Replace ECM (see ENGINE CONTROL MODULE (ECM)).

OK: Go To Next Step.

5. **Check OCV filter (see DISASSEMBLY).**

   NG: Replace OCV filter (see DISASSEMBLY).

   OK: Go To Next Step.

6. **Check OCV (see INSPECTION).**

   OK: Go to step 8.

   NG: Go To Next Step.

7. **Replace OCV (see COMPONENTS).**

   GO: TO THE NEXT STEP

8. **Check VVT controller assembly (see INSPECTION).**

   OK: Go to step 10.

   NG: GO TO THE NEXT STEP

9. **Replace VVT controller assembly.**

   Go: To Next Step

10. **Check blockage of OCV and oil hole.**

    NG: Repair or replace.

    OK: Go To Next STEP

11. **Check whether or not DTC P0011 or P0012 is stored.**

    PREPARATION:

    a. Erase the DTC(s) using one of the following methods: 1) use the hand-held tester, 2) disconnect the battery terminals for more than 60 seconds, or 3) remove the EFI1 and ETCS fuses for more than 60 seconds.

       HINT:

       After disconnecting the battery terminals, perform the "INITIALIZE" procedure (see **PRE-CHECK**).

    b. Perform the simulation test.

    CHECK:

    Check whether or not DTC P0011 or P0012 is stored (see **PRE-CHECK**).

    OK:

    DTC P0011 or P0012 is not stored.

    OK: VVT system is OK.*

cardiagn.com

HINT:

*:DTCs P0011 and P0012 are output when a foreign object in the engine oil enters the system. These codes will stay even if the system returns to normal after a short time.

Foreign objects are filtered out by the oil filter.

NG: Replace ECM (see ENGINE CONTROL MODULE (ECM)).

OBD II scan tool (excluding hand-held tester):

1. **Check valve timing (check for loose or jumped tooth of timing chain) (see INSTALLATION).**
   NG: Adjust valve timing.
   OK: GO TO THE NEXT STEP
2. **Check operation of OCV.**

   PREPARATION:

   Start the engine.

   CHECK:

   a. Check the engine speed when disconnecting the OCV connector.
   b. Check the engine speed when applying the positive battery voltage between the terminals of the OCV.

   RESULT:

Result	Check (a)	Check (b)
1	Normal engine speed	Rough idle or engine stall
2	Conditions other than 1	

G02641751

Fig. 54: Result - Engine Speed Chart
Courtesy of TOYOTA MOTOR SALES, U.S.A., INC.

cardiagn.com

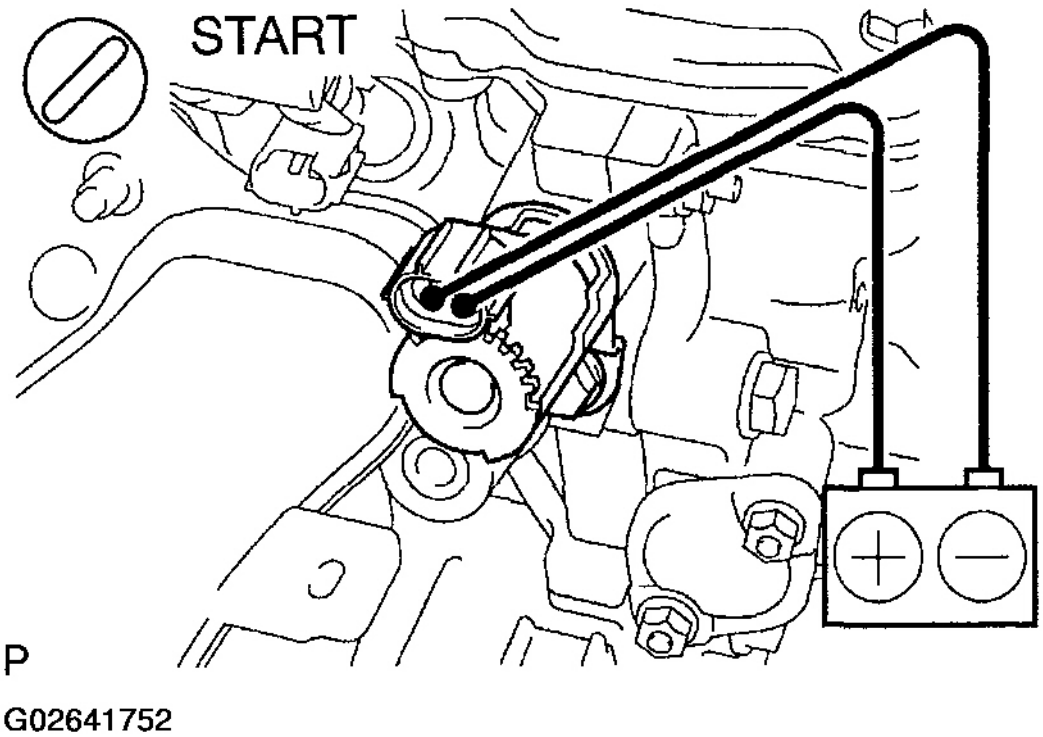

Fig. 55: Applying Battery Voltage Between Terminals Of OCV
Courtesy of TOYOTA MOTOR SALES, U.S.A., INC.

2: Go to step 4.

1: Go To Next Step.

3. **Check if DTC outputs reoccur.**

PREPARATION:

a. Erase the DTC(s) using one of the following methods: 1) use the hand-held tester, 2) disconnect the battery terminals for more than 60 seconds, or 3) remove the EFI1 and ETCS fuses for more than 60 seconds.

HINT:

After disconnecting the battery terminals, perform the "INITIALIZE" (see **PRE-CHECK**).

b. Start the engine and warm it up.
c. Drive the vehicle around for 10 minutes or more.

cardiagn.com

CHECK:

Read output DTC using the hand-held tester.

OK:

DTC P0011 or P0012 is not stored.

OK: VVT system is OK.*

HINT:

*: DTCs P0011 and P0012 are output when a foreign object in the engine oil enters the system. These codes will stay even if the system returns to normal after a short time.

Foreign objects are filtered out by the oil filter.

NG: GO TO THE NEXT STEP

4. **Check voltage between terminals OC1+ and OC1- of ECM connector.**

Reference: INSPECTION USING OSCILLOSCOPE

Turn the ignition switch ON, and check the waveform between terminals OC1+ and OC1- of the ECM connector.

HINT:

The correct waveform is as shown.

cardiagn.com

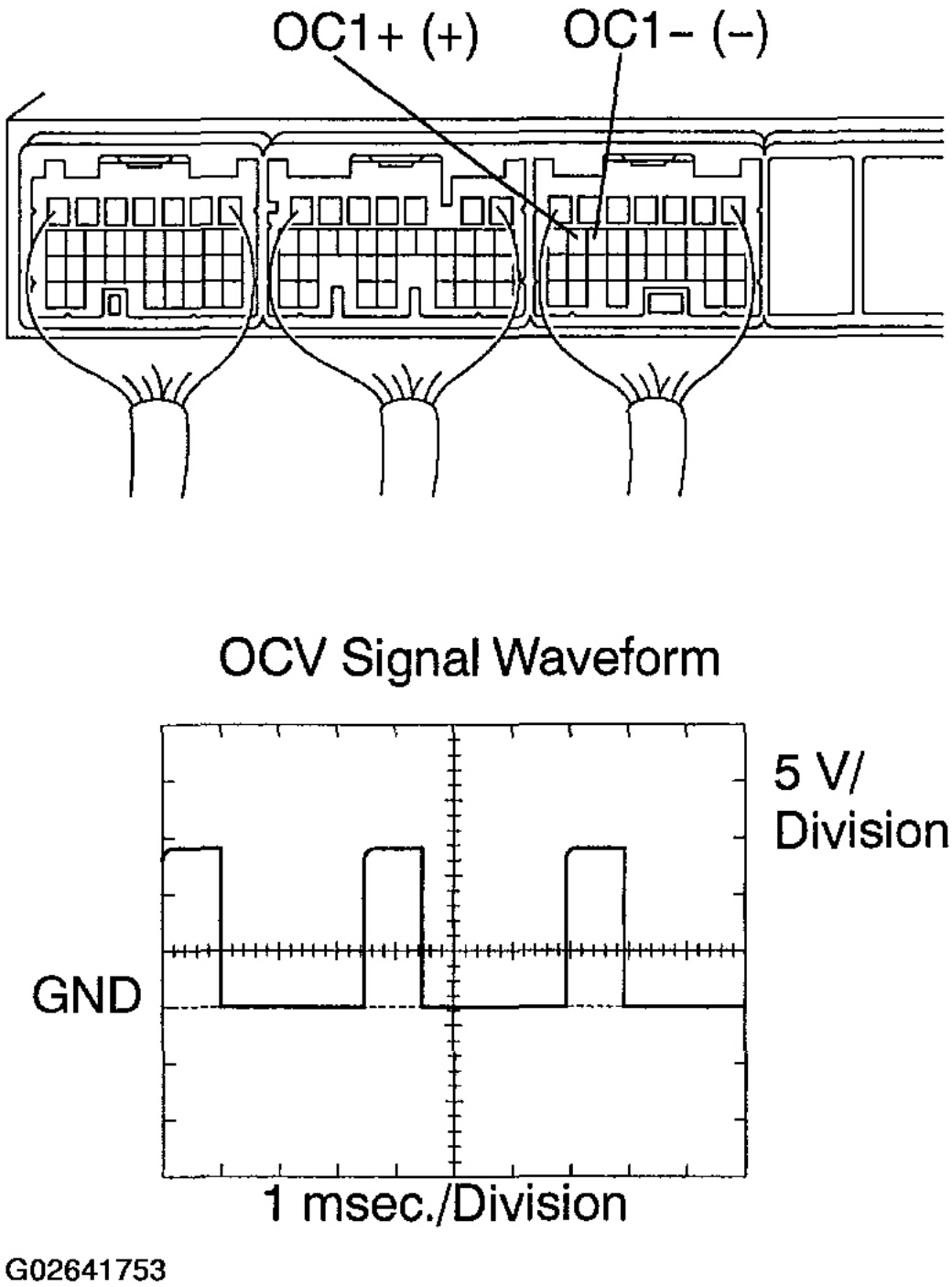

Fig. 56: Signal Waveform Graph (Between Terminals OC1+ & OC1- Of ECM Connector)
Courtesy of TOYOTA MOTOR SALES, U.S.A., INC.

cardiagn.com

NG: Replace ECM (see ENGINE CONTROL MODULE (ECM)).

OK: GO TO THE NEXT STEP

5. **Check OCV filter (see INSPECTION).**

   NG: Replace OCV filter (see DISASSEMBLY).

   OK: GO TO THE NEXT STEP

6. **Check OCV (see INSPECTION).**

   NG: Replace OCV (see COMPONENTS), and then go to step 7.

   OK: GO TO THE NEXT STEP

7. **Check VVT controller assembly (see INSPECTION).**

   NG: Replace VVT controller assembly, and then go to step 8.

   OK: GO TO THE NEXT STEP

8. **Check blockage of OCV and oil hole.**

   NG: Repair or replace.

   OK: GO TO THE NEXT STEP

9. **Check whether or not DTC P0011 or P0012 is stored.**

PREPARATION:

a. Erase the DTC (s) using one of the following methods: 1) use the hand-held tester, 2) disconnect the battery terminals for more than 60 seconds, or 3) remove the EFI1 and ETCS fuses for more than 60 seconds.

   HINT:

   After disconnecting the battery terminals, perform the "INITIALIZE" procedure (see **PRE-CHECK**).

b. Perform the simulation test.

CHECK:

Check whether or not DTC P0011 or P0012 is stored (see **PRE-CHECK**).

OK:

DTC P0011 or P0012 is not stored.

OK: VVT system is OK.*

HINT:

*: DTCs P0011 and P0012 are output when a foreign object in the engine oil enters the system. These codes will stay even if the system returns to normal after a short time.

cardiagn.com

Foreign objects are filtered out by the oil filter.

NG: Replace ECM (see ENGINE CONTROL MODULE (ECM)).

DTC P0016: CRANKSHAFT POSITION - CAMSHAFT POSITION CORRELATION (BANK 1 SENSOR A)

CIRCUIT DESCRIPTION

Refer to circuit description under **DTC P0335, P0339: CRANKSHAFT POSITION SENSOR "A" CIRCUIT MALFUNCTION/INTERMITTENT**.

DTC No.	DTC Detection Condition	Trouble Area
P0016	Deviation in crankshaft position sensor signal and VVT sensor signal (2 trip detection logic)	• Mechanical system (jumped tooth of timing chain, chain stretched) • ECM

G02641754

Fig. 57: DTC P0016 - Problem Symptom Diagnostic Chart
Courtesy of TOYOTA MOTOR SALES, U.S.A., INC.

MONITOR DESCRIPTION

The ECM optimizes the valve timing using the Variable Valve Timing (VVT) system to control the intake valve camshaft. The VVT system includes the ECM, the Oil Control Valve (OCV) and the VVT controller. The ECM sends a target duty-cycle control signal to the OCV. This control signal, applied to the OCV, regulates the oil pressure supplied to the VVT controller. The VVT controller can advance or retard the intake valve camshaft. The ECM calibrates the valve timing of the VVT system by setting the camshaft to the maximum retard angle when the engine speed is idling. The ECM closes the OCV to retard the cam. The ECM stores this valve as VVT learned value. When the difference between the target valve timing and the actual valve timing is 5 degrees or less, the ECM stores this in its memory.

If the learned value meets both of the following conditions ("a" and "b"), the ECM interprets this as a defect in the VVT system and set a DTC.

a. VVT learning value is less than 27°CA or more than 49°CA.
b. Above condition continues for more than 18 seconds.

VVT System: P0016

MONITOR DESCRIPTION (VVT SYSTEM: P0016)

Related DTCs	P0016: Camshaft timing misalignment at Idling
Required sensors/components (Main)	VVT actuator
Required sensors/components (Related)	CMP and CKP sensors
Frequency of operation	Once per driving cycles
Duration	Within 60 sec.

cardiagn.com

MIL operation	2 driving cycles
Sequence of operation	None

TYPICAL ENABLING CONDITIONS

TYPICAL ENABLING CONDITIONS

The monitor will run whenever the following DTCs are not present	See **PRE-CHECK**
Camshaft timing	Maximum retarded
Difference between "target" and "actual" camshaft timing	5°CA or more within 0.5 sec.
"Actual" camshaft timing change per 360 °CA	1.875 °CA or less
Engine RPM	550 to 1,400 rpm

TYPICAL MALFUNCTION THRESHOLDS

TYPICAL MALFUNCTION THRESHOLDS

Either of the following conditions is met:	
"VVT learning value"	Less than 27 °CA
"VVT learning value"	More than 49 °CA

WIRING DIAGRAM

Refer to wiring diagram under **DTC P0335, P0339: CRANKSHAFT POSITION SENSOR "A" CIRCUIT MALFUNCTION/INTERMITTENT**.

INSPECTION PROCEDURE

HINT:

Read freeze frame data using the hand-held tester or the OBD II scan tool. Freeze frame data records the engine conditions when a malfunction is detected. When troubleshooting, freeze frame data can help determine if the vehicle was running or stopped, if the engine was warmed up or not, if the air-fuel ratio was lean or rich, and other data from the time the malfunction occurred.

1. **Check valve timing (check for loose or jumped tooth of timing chain) (see INSTALLATION).**
   NG: Adjust valve timing.
   OK: Replace ECM (see ENGINE CONTROL MODULE (ECM))

DTC P0031, P0032: OXYGEN (A/F) SENSOR HEATER CONTROL CIRCUIT LOW/HIGH (BANK 1 SENSOR 1)

HINT:

Although the title (DTC description) says "oxygen sensor", this DTC is related to the "A/F sensor".

CIRCUIT DESCRIPTION

cardiagn.com

Refer to circuit description under **DTC P2195, P2196: OXYGEN (A/F) SENSOR SIGNAL STUCK LEAN (BANK 1 SENSOR 1) & OXYGEN (A/F) SENSOR SIGNAL STUCK RICH (BANK 1 SENSOR 1)**.

HINT:

The ECM provides a pulse width modulated control circuit to adjust current through the heater. The A/F sensor heater circuit uses a relay on the +B side of the circuit.

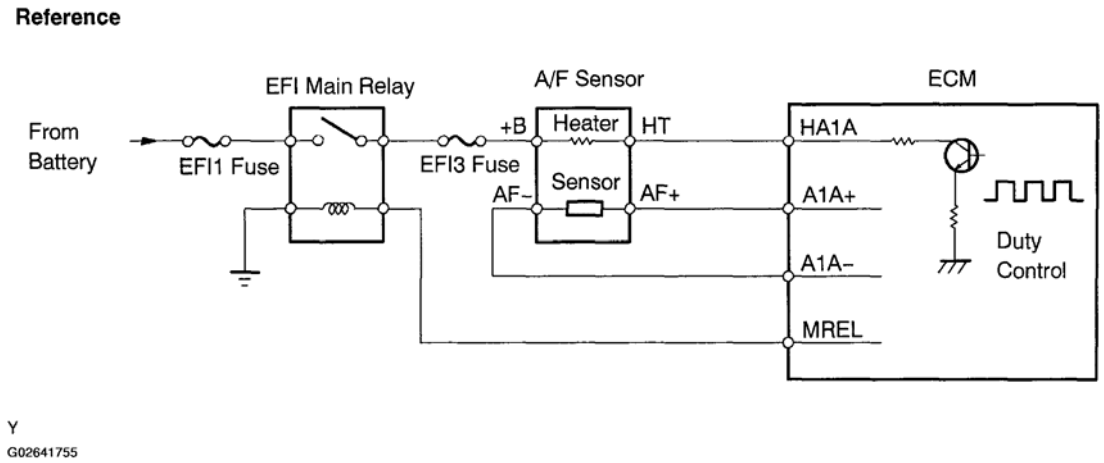

Fig. 58: Circuit Diagram - Oxygen (A/F) Sensor Heater Control
Courtesy of TOYOTA MOTOR SALES, U.S.A., INC.

DTC No.	DTC Detection Condition	Trouble Area
P0031	Heater current is 0.8 A or less when heater operates (1 trip detection logic)	•Open in heater circuit of A/F sensor •A/F sensor heater •EFI main relay •ECM
P0032	When heater operates, heated current exceeds 10 A (1 trip detection logic)	•Short in heater circuit of A/F sensor •A/F sensor heater •EFI main relay •ECM

G02641756

Fig. 59: DTC P0031 & P0032 - Problem Symptom Diagnostic Chart
Courtesy of TOYOTA MOTOR SALES, U.S.A., INC.

MONITOR DESCRIPTION

The ECM uses A/F sensor information to keep the air/fuel ratio close to the stoichiometric ratio. This maximizes the catalytic converter's ability to purify exhaust gases. The sensor detects oxygen levels in the exhaust gas and sends this signal to the ECM.

The inner surface of the sensor element is exposed to outside air. The outer surface of the sensor element is exposed to exhaust gas. The sensor element is made of platinum coated zirconia and includes an integrated

cardiagn.com

heating element. The zirconia element generates a small voltage when there is a large difference in the oxygen concentrations of the exhaust and the outside air. The platinum coating amplifies the voltage generation. When heated, the sensor becomes very efficient. If the temperature of the exhaust is low, the sensor will not generate useful voltage signals without supplemental heating. The ECM regulates the supplemental heating using a duty-cycle approach to regulate the average current in the heater element. If the heater current is out of the normal range, the sensor's output signals will be inaccurate and the ECM cannot regulate the A/F ratio properly.

When the heater current is out of the normal operating range, the ECM interprets this as a malfunction and sets a DTC.

MONITOR STRATEGY

MONITOR STRATEGY

Related DTCs	**P0031: A/F sensor heater range check (Low Current)** **P0032: A/F sensor heater range check (High Current)**
Required sensors/components (Main)	A/F sensor heater
Required sensors/components (Related)	-
Frequency of operation	Continuous
Duration	10 sec.
MIL operation	Immediate
Sequence of operation	None

TYPICAL ENABLING CONDITIONS

TYPICAL ENABLING CONDITIONS

The monitor will run whenever the following DTCs are not present	**None**
Battery voltage	Less than 10.5 V
Time after engine start	10 sec. or more
P0031: A/F sensor heater duty ratio	50 % or more

TYPICAL MALFUNCTION THRESHOLDS

P0031:

TYPICAL MALFUNCTION THRESHOLDS (P0031)

A/F sensor heater current	Less than 0.8 A

P0032:

TYPICAL MALFUNCTION THRESHOLDS (P0032)

A/F sensor heater current	More than 10 A

cardiagn.com

COMPONENT OPERATING RANGE

COMPONENT OPERATING RANGE

A/F sensor heater current	1.8 to 3.4 A at 20°C (68°F)

MONITOR RESULT

Refer to **PRE-CHECK** for detailed information.

MONITOR RESULT

TEST ID	Description of TEST DATA	Conversion Factor	Unit	Standard Value
$81	Maximum A/F sensor heater current	Multiply by 0.173	A	Malfunction thresholds

WIRING DIAGRAM

Refer to wiring diagram under **DTC P2195, P2196: OXYGEN (A/F) SENSOR SIGNAL STUCK LEAN (BANK 1 SENSOR 1) & OXYGEN (A/F) SENSOR SIGNAL STUCK RICH (BANK 1 SENSOR 1)**.

INSPECTION PROCEDURE

HINT:

Read freeze frame data using the hand-held tester or the OBD II scan tool. Freeze frame data records the engine conditions when a malfunction is detected. When troubleshooting, freeze frame data can help determine if the vehicle was running or stopped, if the engine was warmed up or not, if the air-fuel ratio was lean or rich, and other data from the time the malfunction occurred.

1. **Check resistance of A/F sensor heater (see INSPECTION).**

   NG: Replace A/F sensor.

   OK: GO TO THE NEXT STEP

2. **Check EFI main relay.**

   PREPARATION:

   Remove the EFI main relay from the engine room J/B.

   CHECK:

   Inspect the EFI main relay.

   OK:

   EFI MAIN RELAY TERMINALS RESISTANCE

Tester Connection	Specified Condition
3-5	10 kohm or higher

cardiagn.com

3-5	Below 1 ohm (when battery voltage is applied to terminals 1 & 2)

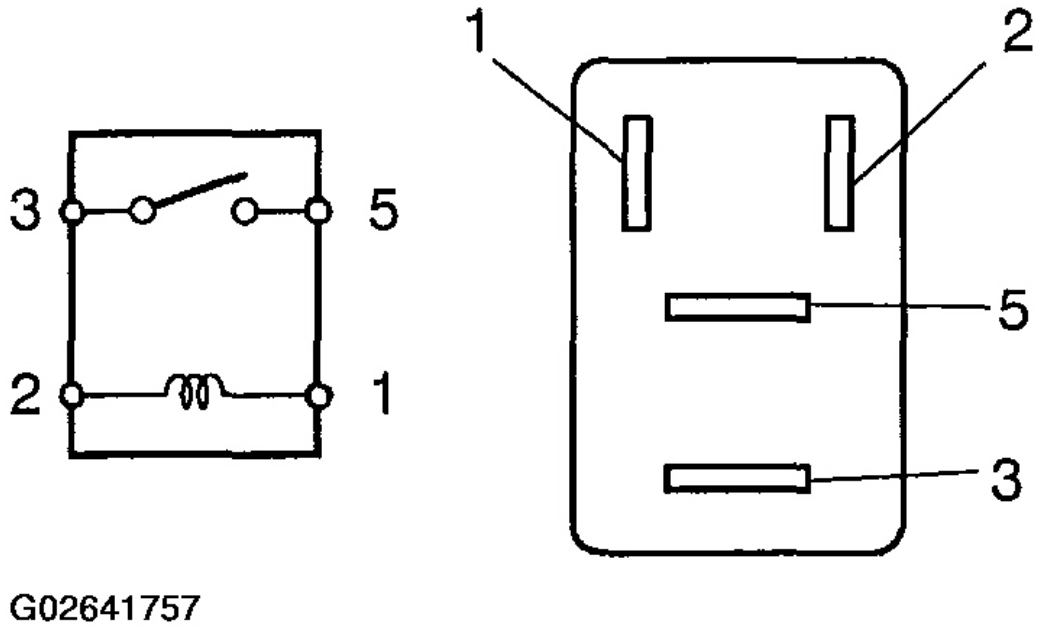

Fig. 60: Identifying EFI Main Relay Terminals
Courtesy of TOYOTA MOTOR SALES, U.S.A., INC.

NG: Replace EFI main relay.

OK: GO TO THE NEXT STEP

3. **Check voltage between terminal HA1A of ECM connector and body ground.**

PREPARATION:

a. Remove the glove compartment (see **ENGINE CONTROL MODULE (ECM)**).
b. Turn the ignition switch ON.

CHECK:

Measure the voltage between terminal HA1A(+) of the ECM connector and body ground.

OK:

Voltage: 9 to 14 V

cardiagn.com

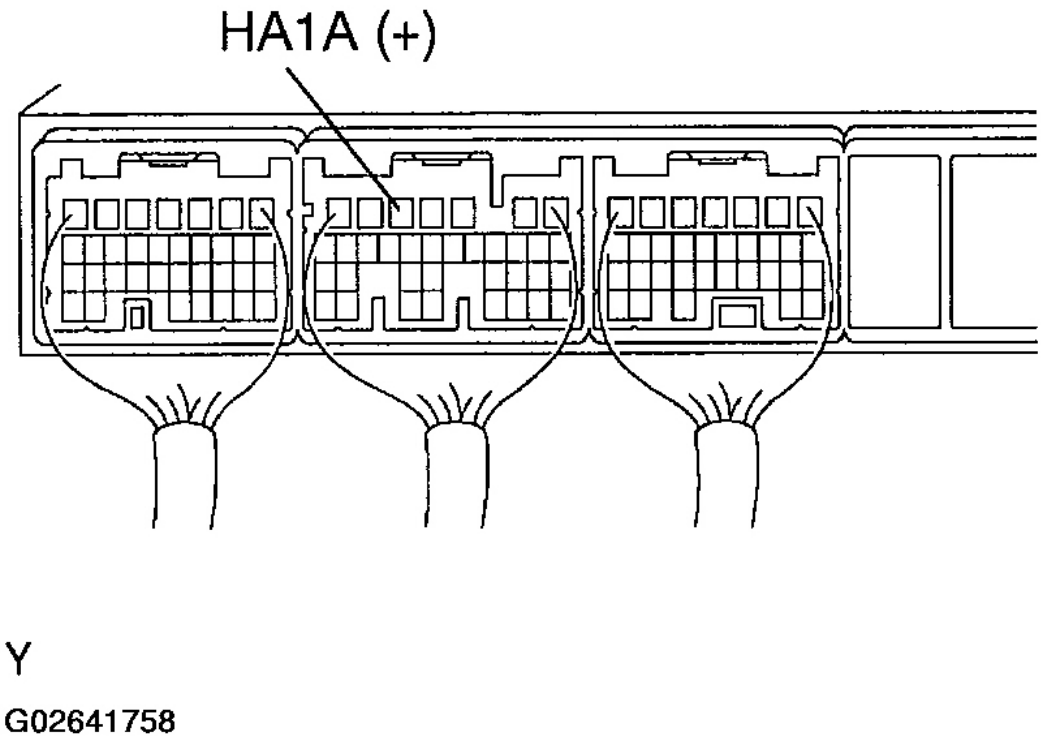

Fig. 61: Identifying Terminal HA1A(+) Of ECM Connector
Courtesy of TOYOTA MOTOR SALES, U.S.A., INC.

OK: Replace ECM (see ENGINE CONTROL MODULE (ECM)).

NG: GO TO THE NEXT STEP

4. **Check for open and short in wire harness between EFI main relay and A/F sensor, and A/F sensor and ECM (see HOW TO USE THE DIAGNOSTIC CHART AND INSPECTION PROCEDURE).**

   NG: Repair or replace harness and connector.

   OK: Replace ECM (see ENGINE CONTROL MODULE (ECM)).

DTC P0037, P0038: OXYGEN SENSOR HEATER CONTROL CIRCUIT LOW/HIGH (BANK 1 SENSOR 2)

CIRCUIT DESCRIPTION

Refer to wiring diagram under **DTC P0136: OXYGEN SENSOR CIRCUIT MALFUNCTION (BANK 1 SENSOR 2)**.

HINT:

cardiagn.com

The ECM provides a pulse width modulated control circuit to adjust current through the heater. The heated oxygen sensor heater uses a relay on the +B side of the circuit.

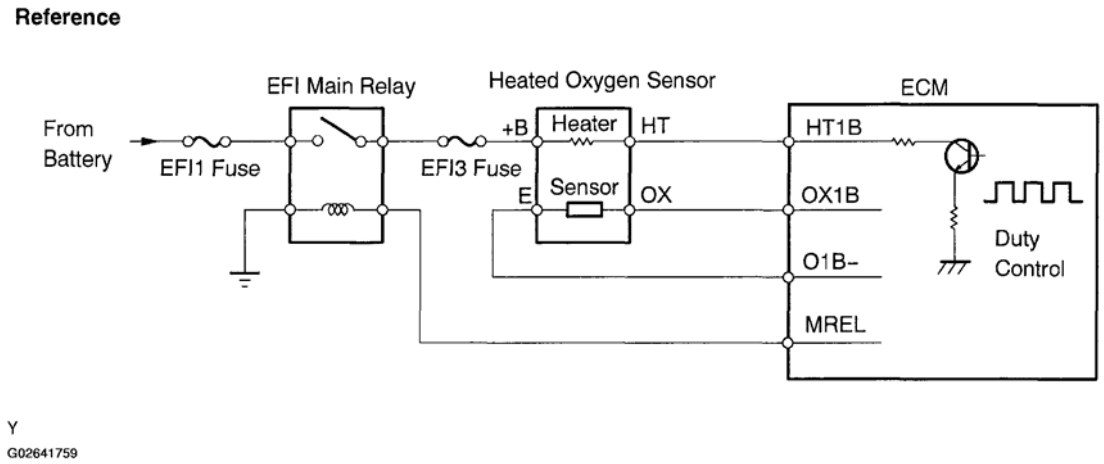

Fig. 62: Circuit Diagram - Oxygen Sensor Heater Control
Courtesy of TOYOTA MOTOR SALES, U.S.A., INC.

DTC No.	DTC Detection Condition	Trouble Area
P0037	Heater current is 0.25 A or less when heater operates with +B (voltage) greater than 11.5 V (1 trip detection logic)	•Open or short in heater circuit of heated oxygen sensor •Heated oxygen sensor heater •EFI main relay •ECM
P0038	With heater operating, heated current exceeds 2 A (1 trip detection logic)	

G02641760

Fig. 63: DTC P0037 & P0038 - Problem Symptom Diagnostic Chart
Courtesy of TOYOTA MOTOR SALES, U.S.A., INC.

HINT:

Sensor 2 refers to the farther sensor from the engine body.

MONITOR DESCRIPTION

The sensing portion of the heated oxygen sensor has a zirconia element which is used to detect oxygen concentration in the exhaust. If the zirconia element is at the proper temperature and difference of the oxygen concentration between the inside and outside surface of sensor is large, the zirconia element will generate voltage signals. In order to increase the oxygen concentration detecting capacity in the zirconia element, the ECM supplements the heat from the exhaust with heat from a heating element inside the sensor. When current in the sensor is out of the standard operating range, the ECM interprets this as a fault in the heated oxygen sensor and sets a DTC.

Example:

cardiagn.com

The ECM will set a high current DTC if the current in the sensor is more than 3.5 A when the heater is OFF. Similarly, the ECM will set a low current DTC if the current is less than 0.25 A when the heater is ON.

MONITOR STRATEGY

MONITOR STRATEGY

Related DTCs	P0037: Rear HO2S heater range check (Low Current)
Related DTCs	P0038: Rear HO2S heater range check (High Current)
Required sensors/components (Main)	HO2S heater
Required sensors/components (Related)	Vehicle speed sensor (VSS)
Frequency of operation	Continuous
Duration	P0037: 2 sec. P0038: 0.3 sec.
MIL operation	Immediate
Sequence of operation	None

TYPICAL ENABLING CONDITIONS

P0037:

TYPICAL ENABLING CONDITIONS (P0037)

The monitor will run whenever the following DTCs are not present	None
Either of the following conditions A and B are met	
Condition A	
Time after engine start	250 to 500 sec.
Vehicle speed	Within 90 km/h (56 mph)
Battery voltage	10.5 V or more
Pass or Fail detection in this driving cycle	None
Condition B	
Time after engine start	500 sec. or more
Vehicle speed	40 km/h (25 mph) or more
Battery voltage	10.5 V or more
Pass or Fail detection in this driving cycle	None

P0038:

TYPICAL ENABLING CONDITIONS (P0038)

Combined heater current for 0.3 second or more	2.2 A or more

TYPICAL MALFUNCTION THRESHOLDS

P0037:

TYPICAL MALFUNCTION THRESHOLDS (P0037)

cardiagn.com

HO2S heater current when HO2S heater OFF	Less than 0.25 A (when battery voltage is 11.5 V)

P0038:

TYPICAL MALFUNCTION THRESHOLDS (P0038)

HO2S heater current when HO2S heater ON	More than 2 A

COMPONENT OPERATING RANGE

COMPONENT OPERATING RANGE

HO2S heater current	0.4 to 1 A (at idle, warmed-up engine and +B: 11 to 14 V)

MONITOR RESULT

Refer to **PRE-CHECK** for detailed information.

MONITOR RESULT

TEST ID	Description of TEST DATA	Conversion Factor	Unit	Standard Value
$81	Maximum rear HO2S heater current	Multiply by 0.000076	A	Malfunction thresholds

WIRING DIAGRAM

Refer to wiring diagram under **DTC P0136: OXYGEN SENSOR CIRCUIT MALFUNCTION (BANK 1 SENSOR 2)**.

INSPECTION PROCEDURE

HINT:

Read freeze frame data using the hand-held tester or the OBD II scan tool. Freeze frame data records the engine conditions when a malfunction is detected. When troubleshooting, freeze frame data can help determine if the vehicle was running or stopped, if the engine was warmed up or not, if the air-fuel ratio was lean or rich, and other data from the time the malfunction occurred.

1. **Check resistance of heated oxygen sensor heater (see INSPECTION).**

   NG: Replace heated oxygen sensor.

   OK: GO TO THE NEXT STEP

2. **Check EFI main relay.**

   PREPARATION:

   Remove the EFI main relay from the engine room J/B.

   CHECK:

cardiagn.com

Inspect the EFI main relay.

OK:

EFI MAIN RELAY TERMINALS RESISTANCE

Tester connection	Specified Condition
3-5	10 kohm or higher
3-5	Below 1 ohm (when battery voltage is applied to terminals 1 and 2)

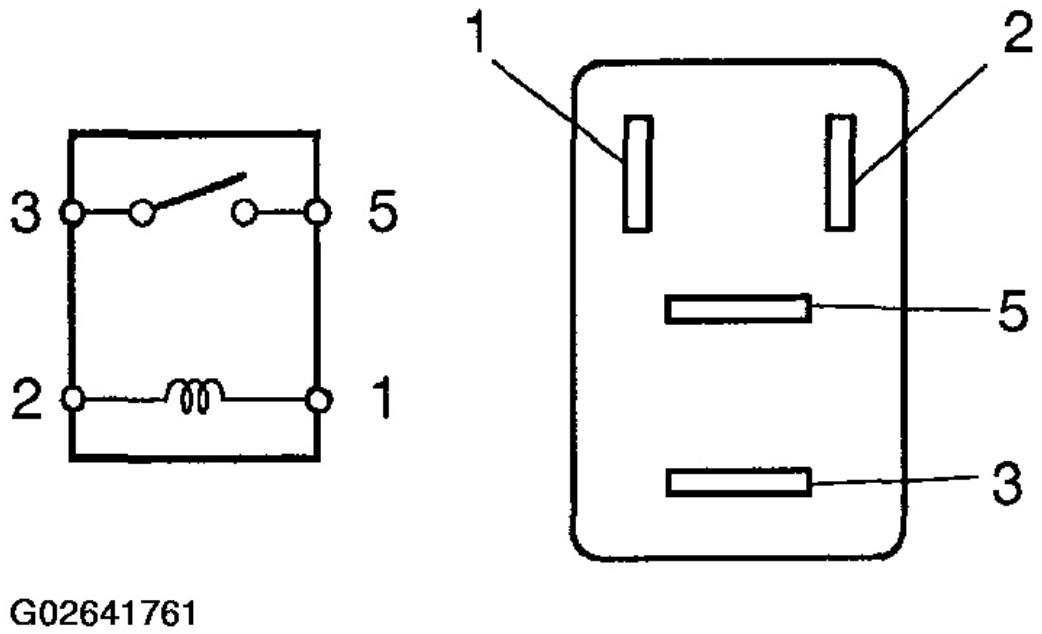

Fig. 64: Identifying EFI Main Relay Terminals
Courtesy of TOYOTA MOTOR SALES, U.S.A., INC.

NG: Replace EFI main relay.
OK: GO TO THE NEXT STEP

3. **Check voltage between terminals HT1B of ECM connector and body ground.**

PREPARATION:

a. Remove the glove compartment (see **ENGINE CONTROL MODULE (ECM)**).
b. Turn the ignition switch ON.

CHECK:

cardiagn.com

Measure the voltage between terminal HT1B of the ECM connector and body ground.

HINT:

Connect terminal HT1B to bank 1 sensor 2.

OK:

Voltage: 9 to 14 V

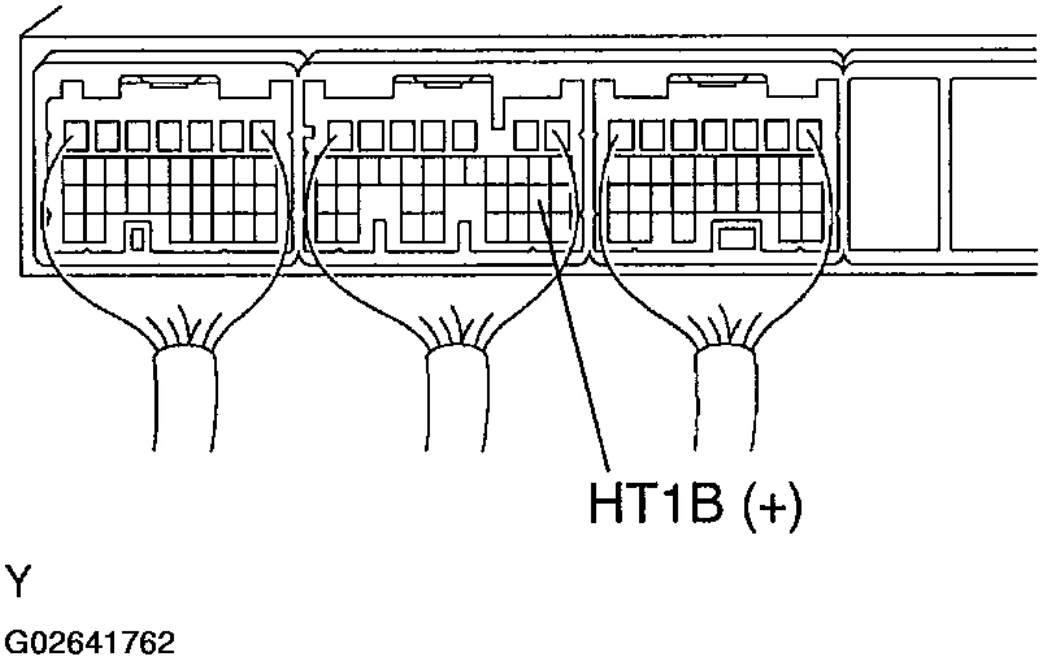

Fig. 65: Identifying Terminals HT1B(+) Of ECM Connector
Courtesy of TOYOTA MOTOR SALES, U.S.A., INC.

OK: Replace ECM (see ENGINE CONTROL MODULE (ECM)).

NG: GO TO THE NEXT STEP

4. **Check for open and short in wire harness between EFI main relay and heated oxygen sensor, and heated oxygen sensor and ECM (see HOW TO USE THE DIAGNOSTIC CHART AND INSPECTION PROCEDURE).**

NG: Repair or replace harness and connector.

OK: Replace ECM (see ENGINE CONTROL MODULE (ECM)).

DTC P0100, P0102, P0103: MASS OR VOLUME AIR FLOW CIRCUIT MALFUNCTION LOW/HIGH

cardiagn.com

INPUT

CIRCUIT DESCRIPTION

The Mass Air Flow (MAF) meter measures the amount of air flowing through the throttle valve. The ECM uses this information to determine the fuel injection time and provide a proper air fuel ratio. Inside the MAF meter, there is a heated platinum wire exposed to the flow of intake air.

By applying a specific current to the wire, the ECM heats this wire to a given temperature. The flow of incoming air cools the wire and an internal thermistor, affecting their resistance. To maintain a constant current value, the ECM varies the voltage applied to these components in the MAF meter. The voltage level is proportional to the airflow through the sensor. The ECM interprets this voltage as the intake air amount.

The circuit is constructed so that the platinum hot wire and temperature sensor provide a bridge circuit, with the power transistor controlled so that the potential of A and B remains equal to maintain the set temperature.

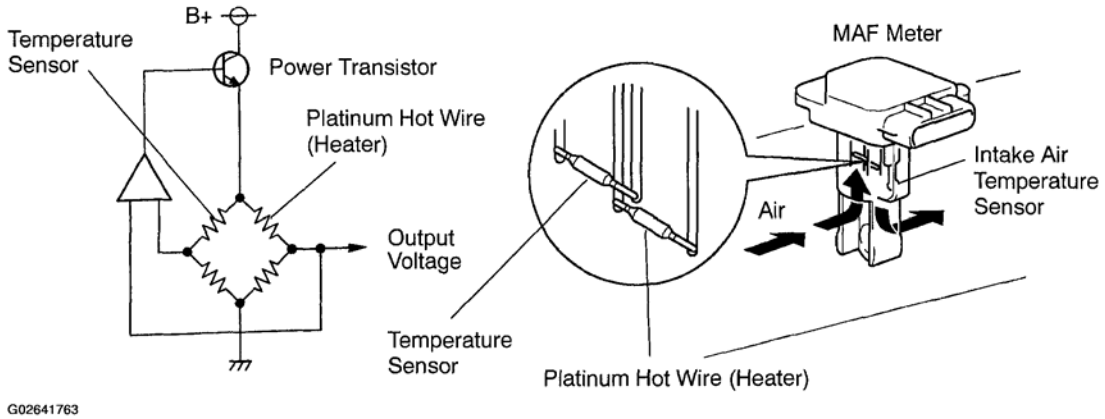

Fig. 66: Circuit Description - Mass Air Flow (MAF) Meter
Courtesy of TOYOTA MOTOR SALES, U.S.A., INC.

The circuit is constructed so that the platinum hot wire and temperature sensor provide a bridge circuit with the power transistor, and the potential of A and B remains equal to maintain the set temperature.

DTC No.	DTC Detection Condition	Trouble Area
P0100	When MAF meter circuit has open or short for more than 3 seconds	• Open or short in MAF meter circuit • MAF meter • ECM
P0102	When MAF meter circuit has open for more than 3 seconds	
P0103	When MAF meter circuit has short for more than 3 seconds	

G02641764

Fig. 67: DTC P0100, P0102 & P0103 - Problem Symptom Diagnostic Chart
Courtesy of TOYOTA MOTOR SALES, U.S.A., INC.

HINT:

cardiagn.com

After confirming DTC P0100, P0102 or P0103, use the hand-held tester or the OBD II scan tool to confirm the MAF ratio from the ALL menu (to reach the ALL menu: DIAGNOSIS / ENHANCED OBD II / DATA LIST /ALL

Air Flow Value (gm/s)	Malfunction
0.0	• Air flow meter power source circuit open • VG circuit open or short
271.0 or more	• EVG circuit open

G02641765

Fig. 68: Air Flow Value & Malfunction Chart
Courtesy of TOYOTA MOTOR SALES, U.S.A., INC.

MONITOR DESCRIPTION

If there is a defect in the sensor or an open or short circuit, the voltage level will deviate outside the normal operating range. The ECM interprets this deviation as a defect in the MAF meter and sets a DTC

Example:

When the sensor voltage output is less than 0.2 V, or more than 4.9 V, and if either the condition continues for more than 3 seconds.

MONITOR STRATEGY

MONITOR STRATEGY

Related DTCs	P0100: MAF meter range check (Fluttering) P0102: MAF meter range check (Low voltage) P0103: MAF meter range check (High voltage)
Required sensors/components (Main)	MAF meter
Required sensors/components (Related)	CKP sensor
Frequency of operation	Continuous
Duration	3 sec.
MIL operation	Immediate: Engine RPM is less than 4,000 rpm 2 driving cycles: Engine RPM is 4,000 rpm or more
Sequence of operation	None

TYPICAL ENABLING CONDITIONS

TYPICAL ENABLING CONDITIONS

The monitor will run whenever the following DTCs are not present	None

TYPICAL MALFUNCTION THRESHOLDS

P0100:

cardiagn.com

TYPICAL MALFUNCTION THRESHOLDS (P0100)

MAF meter voltage	Less than 0.2 V or more than 4.9 V

P0102:

TYPICAL MALFUNCTION THRESHOLDS (P0102)

MAF meter voltage	Less than 0.2 V

P0103:

TYPICAL MALFUNCTION THRESHOLDS (P0103)

MAF meter voltage	More than 4.9 V

COMPONENT OPERATING RANGE

COMPONENT OPERATING RANGE

MAF meter voltage	Between 0.4 and 2.2 V

WIRING DIAGRAM

cardiagn.com

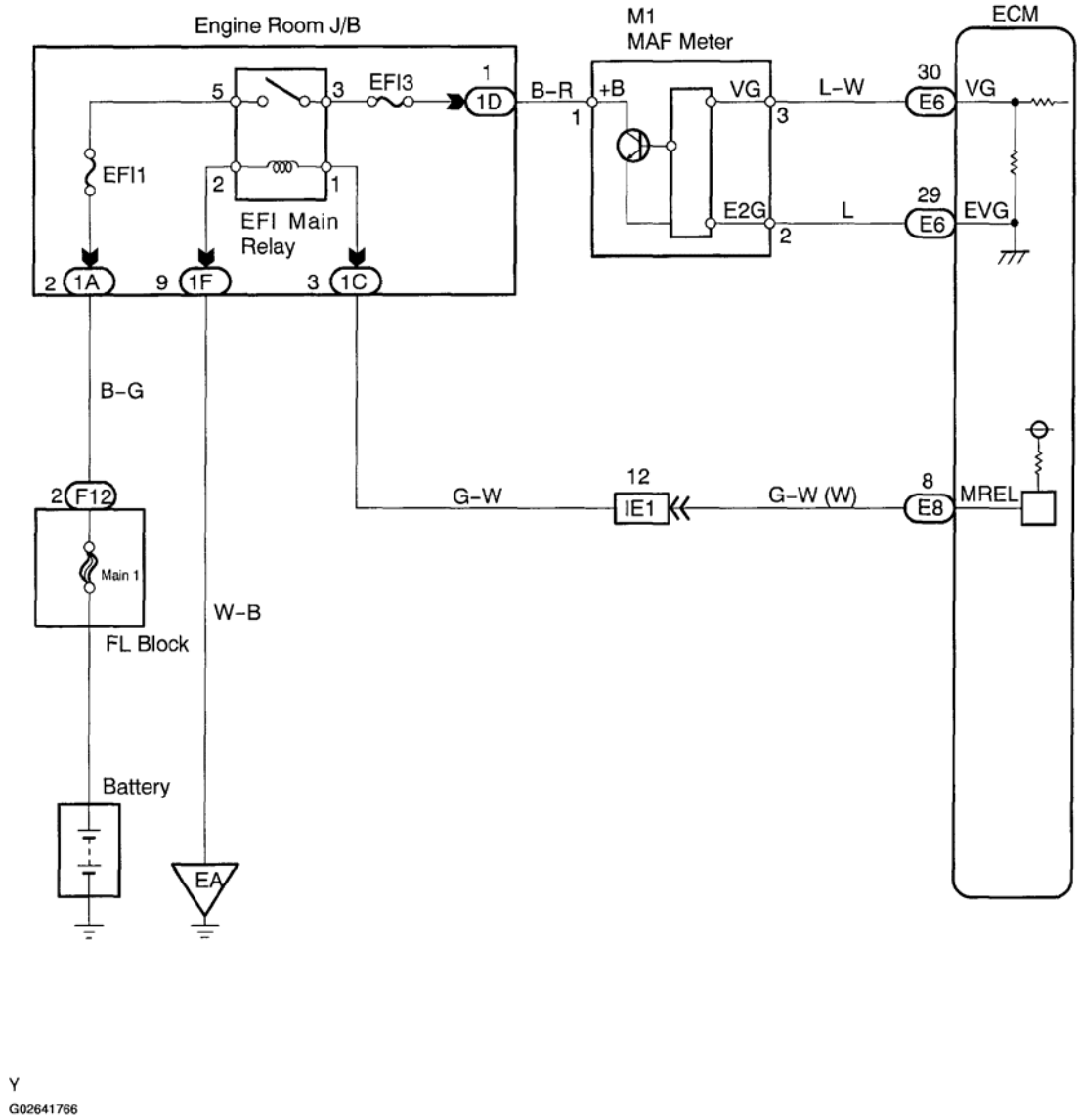

Y
G02641766

Fig. 69: Wiring Diagram - Mass Air Flow Circuit
Courtesy of TOYOTA MOTOR SALES, U.S.A., INC.

INSPECTION PROCEDURE

HINT:

Read freeze frame data using the hand-held tester or the OBD II scan tool. Freeze frame data records the engine conditions when a malfunction is detected. When troubleshooting, freeze frame data can help determine if the vehicle was running or stopped, if the engine was warmed up or not, if the air-fuel ratio was lean or rich, and other data from the time the malfunction occurred.

1. **Connect hand-held tester or OBD II scan tool and read value of air flow rate.**

cardiagn.com

PREPARATION:

a. Connect the hand-held tester or OBD II scan tool to the DLC3.
b. Start the engine.
c. Push the hand-held tester or the OBD II scan tool main switch ON.
d. On the hand-held tester or the OBD II scan tool, enter the following menus: DIAGNOSIS / ENHANCED OBD II / DATA LIST / ALL / MAF

CHECK:

Read the mass air flow rate on the OBD II scan tool or the hand-held tester.

RESULT:

MASS AIR FLOW RATE SPECIFICATION

Air Flow Rate (gm/s)	Proceed to
0.0	Type I
271.0 or more	a Type II
Between 1 and 270.0 (1)	b Type III
(1) The value must be changed when the throttle valve is opened or closed.	

a. **Type II: Go to step 5.**
b. **Type III: Check for intermittent problems (see PRE-CHECK).**
c. **Type I: Go To Next Step.**

2. **Check voltage of MAF meter power source.**

PREPARATION:

a. Disconnect the MAF meter connector.
b. Turn the ignition switch ON.

CHECK

Measure the voltage between terminal 1 of the MAF meter connector and body ground.

OK:

Voltage: 9 to 14 V

cardiagn.com

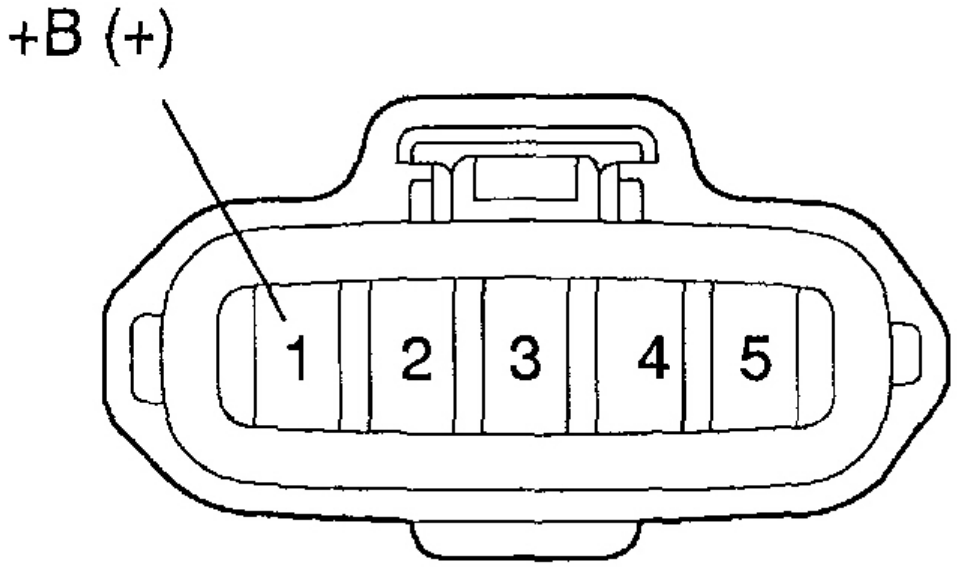

Y

G02641767

Fig. 70: Identifying MAF Meter Connector Terminal 1
Courtesy of TOYOTA MOTOR SALES, U.S.A., INC.

NG: Check for open in harness and connector between EFI main relay and MAF meter (see HOW TO USE THE DIAGNOSTIC CHART AND INSPECTION PROCEDURE).

OK: Go To Next Step.

3. **Check voltage between terminal VG and EVG of ECM connector.**

PREPARATION:

a. Remove the glove compartment (see **ENGINE CONTROL MODULE (ECM)**).
b. Start the engine.

CHECK:

Measure the voltage between terminal VG and EVG of the ECM connector while the engine is idling.

OK:

cardiagn.com

Voltage:

0.5 to 3.0 V (Neutral position and A/C switch OFF)

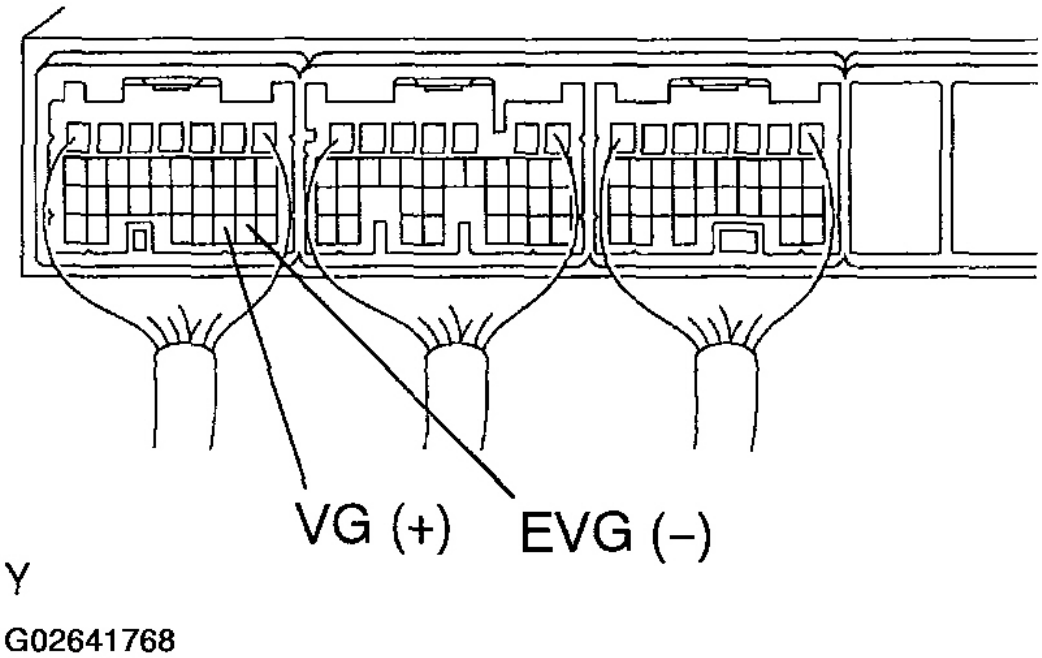

Fig. 71: Identifying Terminal VG & EVG Of ECM Connector
Courtesy of TOYOTA MOTOR SALES, U.S.A., INC.

OK: Replace ECM (see ENGINE CONTROL MODULE (ECM)).

NG: Go To Next Step.

4. **Check for open and short in wire harness between MAF meter and ECM, and between the MAF meter and EFI main relay (see HOW TO USE THE DIAGNOSTIC CHART AND INSPECTION PROCEDURE).**

   NG: Repair or replace harness and connector.

   OK: Replace MAF meter.

5. **Check resistance between terminal EVG of ECM connector and body ground.**

PREPARATION:

Remove the glove compartment (see **ENGINE CONTROL MODULE (ECM)**).

CHECK:

cardiagn.com

Check the resistance between terminal EVG of the ECM connector and body ground.

OK:

Resistance: Below 1 ohm

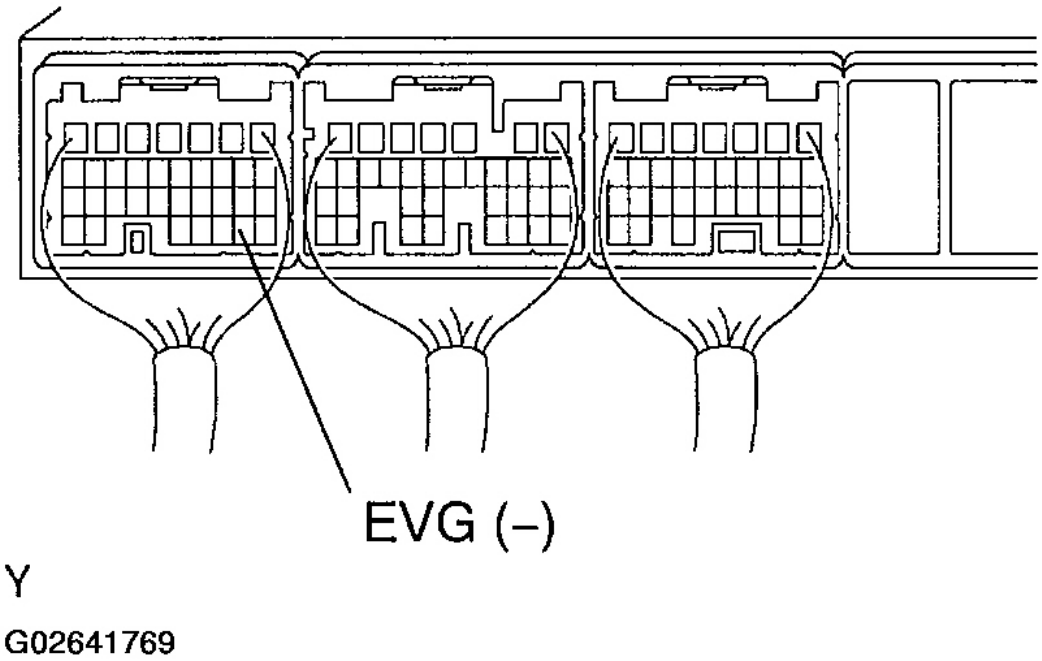

Fig. 72: Identifying Terminal EVG Of ECM Connector
Courtesy of TOYOTA MOTOR SALES, U.S.A., INC.

NG: Replace ECM (see ENGINE CONTROL MODULE (ECM)).

OK: Go To Next Step.

6. **Check for open in wire harness between MAF meter and ECM (see HOW TO USE THE DIAGNOSTIC CHART AND INSPECTION PROCEDURE).**

   NG: Repair or replace harness and connector.

   OK: Replace MAF meter.

DTC P0101: MASS OR VOLUME AIR FLOW CIRCUIT RANGE/PERFORMANCE PROBLEM

CIRCUIT DESCRIPTION

Refer to circuit description under **DTC P0100 MASS OR VOLUME AIR FLOW CIRCUIT MALFUNCTION, DTC P0102 MASS OR VOLUME AIR FLOW CIRCUIT LOW INPUT, DTC P0103**

cardiagn.com

MASS OR VOLUME AIR FLOW CIRCUIT HIGH INPUT.

DTC No.	DTC Detection Condition	Trouble Area
P0101	After engine is warmed up, conditions (a), (b), (c) and (d) continue for more than 10 seconds (2 trip detection logic): (a)Throttle valve fully closed (b)Voltage output of MAF meter is more than 2.2 V (c)Engine coolant temperature is more than 70°C (d)Engine speed is less than 900 rpm	•MAF meter
	Conditions (a), (b) and (c) continue for more 6 second: (2 trip detection logic) (a) Engine speed is more than 0 rpm (b) VTA is more than 0.1V (c) Voltage output of the MAF meter is less than 0.4V	

G02641770

Fig. 73: DTC P0101 - DTC Detection Condition Chart
Courtesy of TOYOTA MOTOR SALES, U.S.A., INC.

MONITOR DESCRIPTION

The Mass Air Flow (MAF) meter helps the ECM calculate the amount of air flowing through the throttle valve.

The ECM uses this information to determine the fuel injection time and provide a proper air fuel ratio. Inside the MAF meter, there is a heated platinum wire exposed to the flow of intake air. By applying a specific current to the wire, the ECM heats this wire to a given temperature. The flow of incoming air cools the wire and an internal thermistor, affecting their resistance. To maintain a constant current value, the ECM varies the voltage applied to these components in the MAF meter. The voltage level is proportional to the air flow through the sensor. The ECM interprets this voltage as the intake air amount. If there is a defect in the sensor or an open or short circuit, the voltage level will deviate from the normal operating range. The ECM interprets this deviation as a defect in the MAF meter and sets a DTC.

Example: If the voltage is more than 2.2 V at idle or less than 0.4 V at idle off, the ECM interprets this as a defect in the MAF meter and sets a DTC.

MONITOR STRATEGY

MONITOR STRATEGY

Related DTCs	**P0101: MAF meter rationality (Low voltage)** **P0101: MAF meter rationality (High voltage)**
Required sensors/components (Main)	MAF meter
Required sensors/components (Related)	CKP sensor, ECT sensor, TP sensor
Frequency of operation	Continuous
Duration	10 sec.
MIL operation	2 driving cycles
Sequence of operation	None

cardiagn.com

TYPICAL ENABLING CONDITIONS

TYPICAL ENABLING CONDITIONS

The monitor will run whenever the following DTCs are not present	See **PRE-CHECK**

MAF Meter Rationality (Low voltage):

TYPICAL ENABLING CONDITIONS (MAF METER RATIONALITY (LOW VOLTAGE))

Engine RPM	Less than 900 rpm
Idle	ON
ECT	70°C (158°F) or more

MAF Meter Rationality (High voltage):

TYPICAL ENABLING CONDITIONS (MAF METER RATIONALITY (HIGH VOLTAGE))

RPM	0 rpm or more
TP voltage	0.1 V or more

TYPICAL MALFUNCTION THRESHOLDS

MAF Meter Rationality (Low voltage):

TYPICAL MALFUNCTION THRESHOLDS (MAF METER RATIONALITY (LOW VOLTAGE))

MAF meter voltage	More than 2.4 V

MAF meter Rationality (High voltage):

TYPICAL MALFUNCTION THRESHOLDS (MAF METER RATIONALITY (HIGH VOLTAGE))

MAF meter voltage	More than 2.2 V

WIRING DIAGRAM

Refer to wiring diagram under **DTC P0100 MASS OR VOLUME AIR FLOW CIRCUIT MALFUNCTION, DTC P0102 MASS OR VOLUME AIR FLOW CIRCUIT LOW INPUT, DTC P0103 MASS OR VOLUME AIR FLOW CIRCUIT HIGH INPUT**.

INSPECTION PROCEDURE

HINT:

Read freeze frame data using the hand-held tester or the OBD II scan tool. Freeze frame data records the engine conditions when a malfunction is detected. When troubleshooting, freeze frame data can help determine if the vehicle was running or stopped, if the engine was warmed up or not, if the air-fuel ratio was lean or rich, and other data from the time the malfunction occurred.

cardiagn.com

1. **Are there any other codes (besides DTC P0101) being output?**

   NO: Replace MAF meter.

   YES: Go to relevant DTC chart (see DIAGNOSTIC TROUBLE CODE CHART).

DTC P0110, P0112, P0113: INTAKE AIR TEMPERATURE CIRCUIT LOW/HIGH INPUT

CIRCUIT DESCRIPTION

The Intake Air Temperature (IAT) sensor, mounted on the Mass Air Flow (MAF) meter, monitors the intake air temperature. The IAT sensor has a thermistor that varies its resistance depending on the temperature of the intake air. When the air temperature is low, the resistance in the thermistor increases. When the temperature is high, the resistance drops. The variations in resistance are reflected as voltage changes to the ECM terminal (see **Fig. 74**).

The IAT sensor is connected to the ECM (see below). The 5 V power source voltage in the ECM is applied to the IAT sensor from terminal THA (THAR) via resistor R.

That is, the resistor R and the IAT sensor are connected in series. When the resistance value of the IAT sensor changes in accordance with changes in the IAT, the voltage at terminal THA (THAR) also changes. Based on this signal, the ECM increases the fuel injection volume to improve the driveability during cold engine operation.

cardiagn.com

Fig. 1

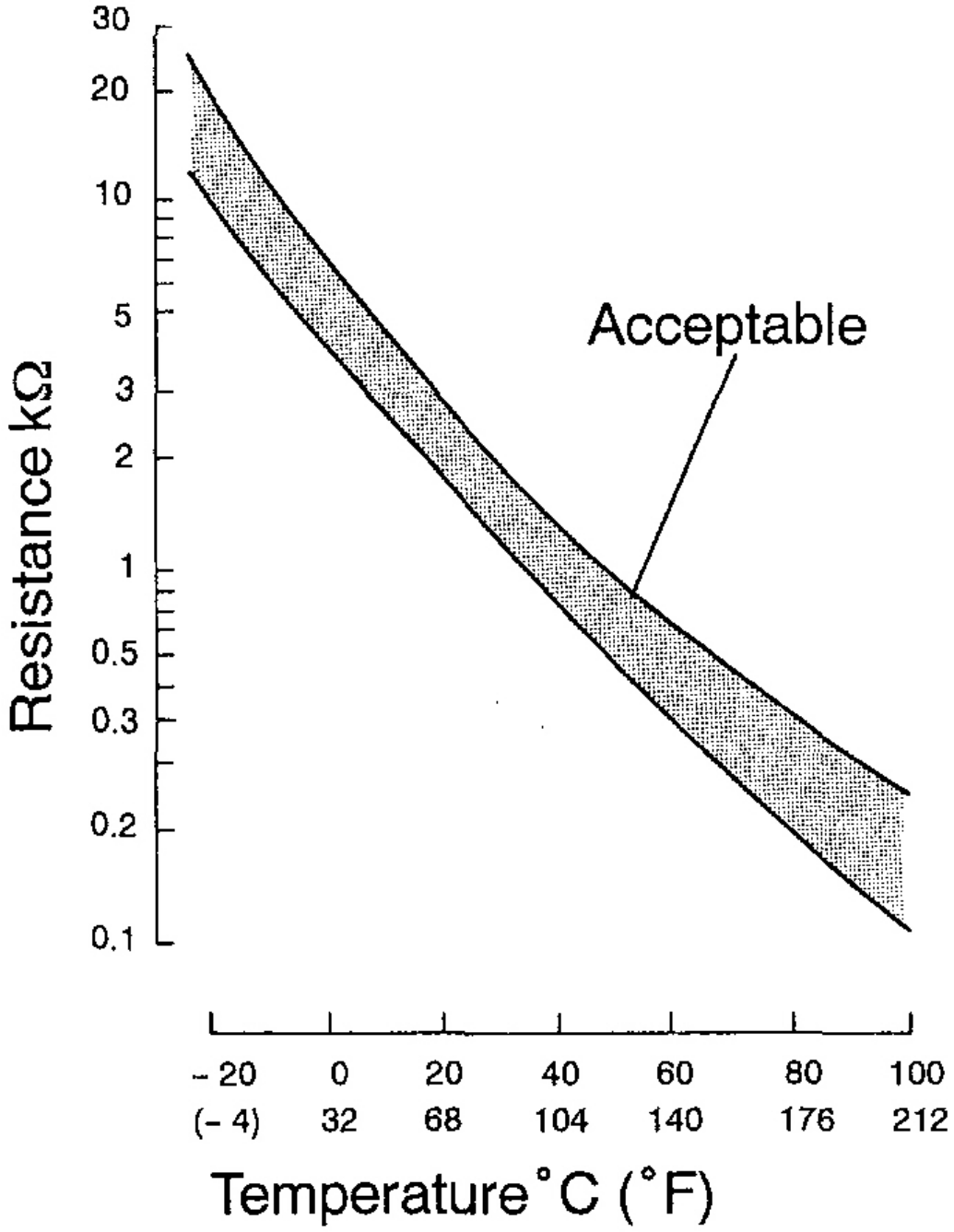

G02641771

cardiagn.com

Fig. 74: Intake Air Temperature Circuit Resistance Graph
Courtesy of TOYOTA MOTOR SALES, U.S.A., INC.

DTC No.	Proceed to	DTC Detection Condition	Trouble Area
P0110	Step 1	Open or short in IAT sensor circuit for 0.5 seconds	•Open or short in IAT sensor circuit •IAT sensor (inside MAF meter) •ECM
P0112	Step 4	Short in IAT sensor circuit for 0.5 seconds	
P0113	Step 2	Open in IAT sensor circuit for 0.5 seconds	

G02641772

Fig. 75: DTC P0110, P0112 & P0113 - Problem Symptom Diagnostic Chart
Courtesy of TOYOTA MOTOR SALES, U.S.A., INC.

HINT:

After confirming DTC P0110, P112 or P0113, use the hand-held tester to confirm the intake air temperature from the "DIAGNOSIS / ENHANCED OBD II / DATA LIST / ALL".

TEMPERATURE DISPLAYED AND MALFUNCTION

Temperature Displayed	Malfunction
-40°C (-40°F)	Open circuit
140°C (284°F) or more	Short circuit

MONITOR DESCRIPTION

The ECM monitors the sensor voltage and uses this value to calculate the intake air temperature (IAT). When the sensor output voltage deviates from the normal operating range, the ECM interprets this as a fault in the IAT sensor and sets a DTC.

Example:

When the sensor voltage output equal to less than -40°C (-40°F), or more than 140°C (284°F), and either condition continue 0.5 second or more.

MONITOR STRATEGY

MONITOR STRATEGY

Related DTCs	P0110: IAT sensor range check (Fluttering) P0112: IAT sensor range check (Low voltage) P0113: IAT sensor range check (High voltage)
Required sensors/components (Main)	IAT sensor
Required sensors/components (Related)	-
Frequency of operation	Continuous
Duration	0.5 sec.

cardiagn.com

MIL operation	Immediate
Sequence of operation	None

TYPICAL ENABLING CONDITIONS

TYPICAL ENABLING CONDITIONS

The monitor will run whenever the following DTCs are not present	None

TYPICAL MALFUNCTION THRESHOLDS

P0110:

TYPICAL MALFUNCTION THRESHOLDS (P0110)

IAT sensor resistance	Less than 98.5 ohm or more than 156 kohm

P0112:

TYPICAL MALFUNCTION THRESHOLDS (P0112)

IAT sensor resistance [IAT]	Less than 98.5 ohm [More than 140°C (284°F)]

P0113:

TYPICAL MALFUNCTION THRESHOLDS (P0113)

IAT sensor resistance [IAT]	More than 156 kohm [Less than -40°C (-40°F)]

COMPONENT OPERATING RANGE

COMPONENT OPERATING RANGE

IAT sensor resistance [IAT]	98.5 ohm to 156 kohm [-40 to 140°C (-40 to 284°F)]

WIRING DIAGRAM

cardiagn.com

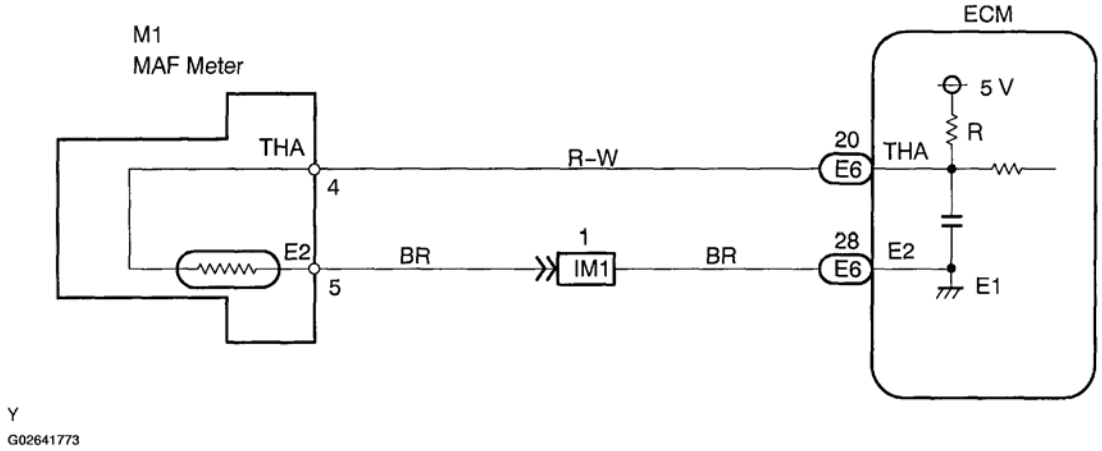

Fig. 76: Wiring Diagram - Intake Air Temperature Circuit
Courtesy of TOYOTA MOTOR SALES, U.S.A., INC.

INSPECTION PROCEDURE

HINT:

- If different DTCs that are related to different systems are output simultaneously while terminal E2 is used as a ground terminal, terminal E2 may be open.
- Read freeze frame data using the hand-held tester or the OBD II scan tool. Freeze frame data records the engine conditions when a malfunction is detected. When troubleshooting, freeze frame data can help determine if the vehicle was running or stopped, if the engine was warmed up or not, if the air-fuel ratio was lean or rich, and other data from the time the malfunction occurred.

1. **Connect hand-held tester or OBD II scan tool, and read value of intake air temperature.**

   PREPARATION:

   a. Connect the hand-held tester or the OBD II scan tool to the DLC3.
   b. Turn the ignition switch ON. Push the hand-held tester or OBD II scan tool main switch ON.
   c. On the hand-held tester or OBD II scan tool, enter the following menus: DIAGNOSIS / ENHANCED OBD II / DATA LIST / ALL / INTAKE AIR.

   CHECK:

   Read the temperature value on the hand-held tester or the OBD II scan tool.

   OK:

   Same value as the actual air intake temperature.

cardiagn.com

HINT:

- If there is open circuit, hand-held tester or OBD II scan tool indicates -40°C (-40°F).
- If there is short circuit, hand-held tester or OBD II scan tool indicates 140°C (284°F) or more.

NG: -40°C (-40°F) ..... Go to step 2. 140°C (284°F) or more ..... Go to step 4.

OK: Check for intermittent problems (see PRE-CHECK).

2. **Check for open in harness or ECM.**

PREPARATION:

a. Disconnect the MAF meter connector.
b. Connect the terminals THA and E2 of the MAF meter wire harness side connector.
c. Connect the hand-held tester or the OBD II scan tool to the DLC3.
d. Turn the ignition switch ON.
e. Push the hand-held tester or OBD II scan tool main switch ON.
f. On the hand-held tester or OBD II scan tool, enter the following menus: DIAGNOSIS / ENHANCED OBD II / DATA LIST / ALL / INTAKE AIR.

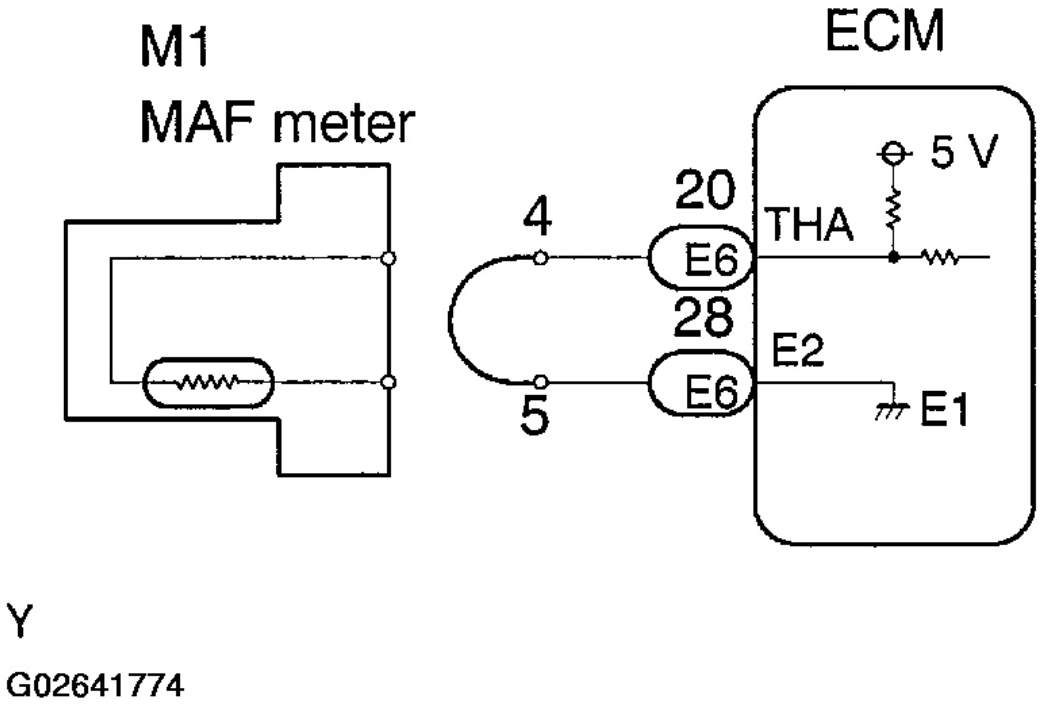

Fig. 77: Connecting Terminals THA & E2 Of MAF Meter Wire Harness Side Connector
Courtesy of TOYOTA MOTOR SALES, U.S.A., INC.

cardiagn.com

CHECK:

Read the temperature value on the hand-held tester or the OBD II scan tool.

OK:

Temperature value: 140°C (284°F) or more

OK: Confirm good connection at sensor. If OK, replace MAF meter.
NG: Go To Next Step.

3. **Check for open in harness or ECM.**

PREPARATION:

a. Disconnect the MAF meter connector.
b. Connect terminals THA and E2 of the ECM connector.

cardiagn.com

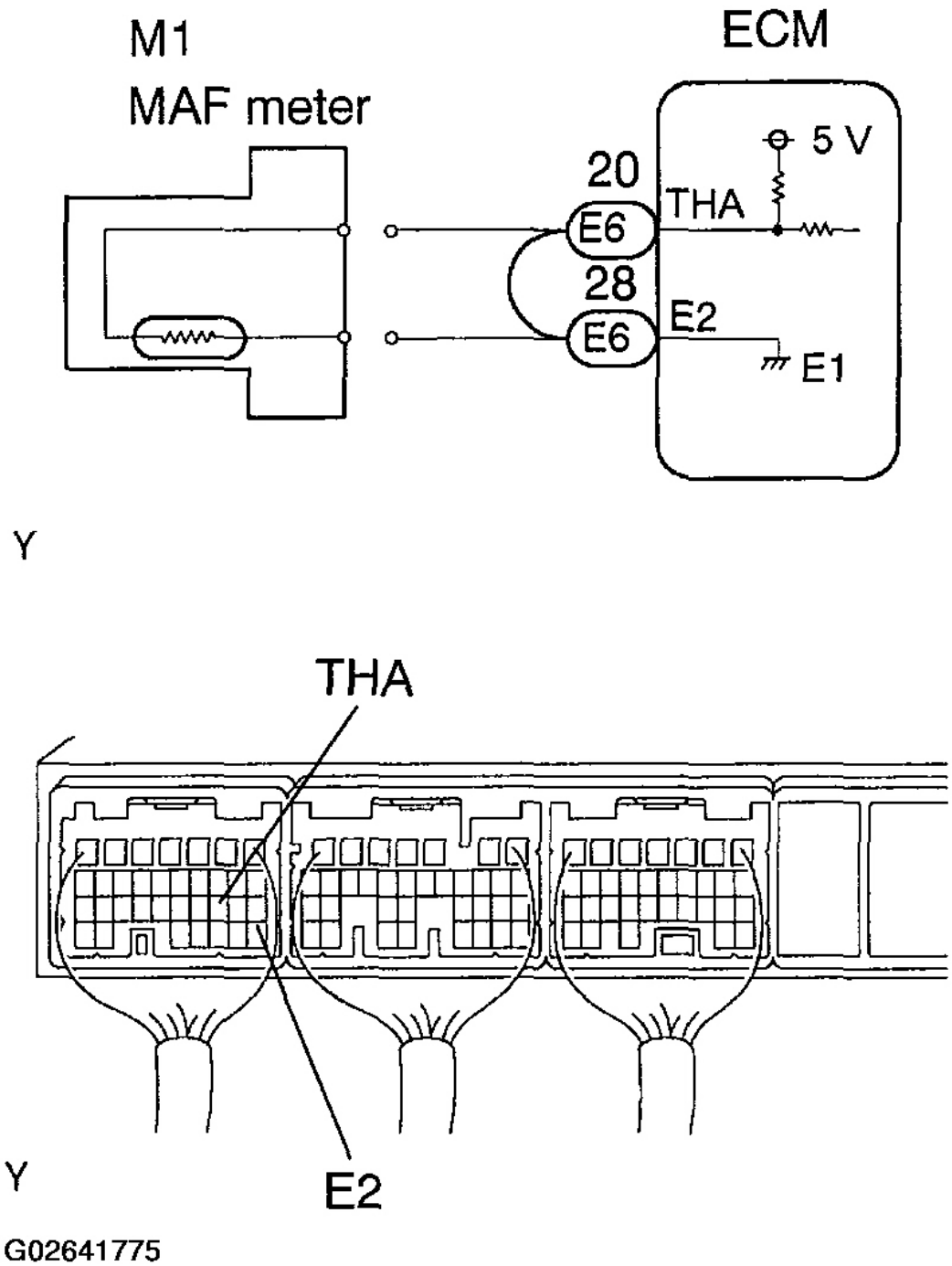

Fig. 78: Identifying Terminals THA & E2 Of ECM Connector
Courtesy of TOYOTA MOTOR SALES, U.S.A., INC.

cardiagn.com

HINT:

Before checking, do a visual and contact pressure check for the ECU connector.

c. Connect the hand-held tester or the OBD II scan tool to the DLC3.
d. Turn the ignition switch ON.
e. Push the hand-held tester or OBD II scan tool main switch ON.
f. On the hand-held tester or OBD II scan tool, enter the following menus: DIAGNOSIS / ENHANCED OBD II / DATA LIST / ALL / INTAKE AIR.

CHECK:

Read the temperature value on the hand-held tester or the OBD II scan tool.

OK:

Temperature value: 140°C (284°F) or more

OK: Open in harness between terminals E2 or THA, repair or replace harness.

NG: Confirm good connection at ECM. If OK, replace ECM (see ENGINE CONTROL MODULE (ECM)).

4. **Check for short in harness and ECM.**

PREPARATION:

a. Disconnect the MAF meter connector.
b. Connect the hand-held tester or the OBD II scan tool to the DLC3.
c. Turn the ignition switch ON.
d. Push the hand-held tester or OBD II scan tool main switch ON.
e. On the hand-held tester or OBD II scan tool, enter the following menus: DIAGNOSIS / ENHANCED OBD II / DATA LIST / ALL / INTAKE AIR.

cardiagn.com

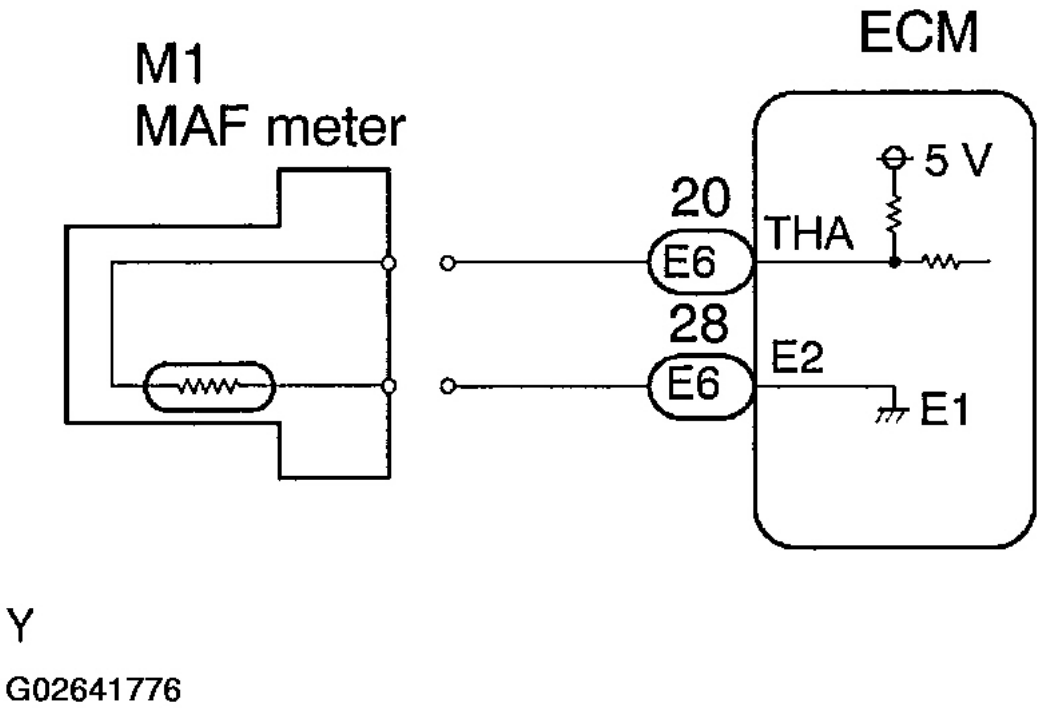

Fig. 79: Disconnecting MAF Meter Connector
Courtesy of TOYOTA MOTOR SALES, U.S.A., INC.

CHECK:

Read the temperature value on the hand-held tester or the OBD II scan tool.

OK:

Temperature value: -40°C (-40°F)

OK: Replace MAF meter.
NG: Go To Next Step.

5. **Check for short in harness or ECM.**

PREPARATION:

a. Disconnect the E6 ECM connector.
b. Connect the hand-held tester or the OBD II scan tool to the DLC3.

HINT:

cardiagn.com

The MAF meter connector is disconnected.

c. Turn the ignition switch ON.
d. Push the hand-held tester or OBD II scan tool main switch ON.
e. On the hand-held tester or OBD II scan tool, enter the following menus: DIAGNOSIS / ENHANCED OBD II / DATA LIST / ALL / INTAKE AIR.

CHECK:

Read the temperature value on the hand-held tester or the OBD II scan tool.

OK:

Temperature value: -40°C (-40°F)

cardiagn.com

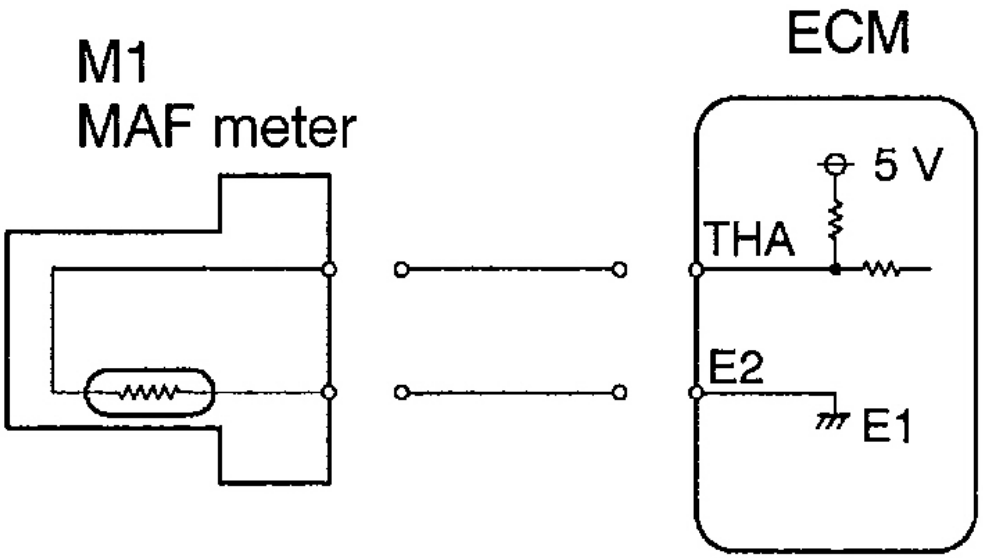

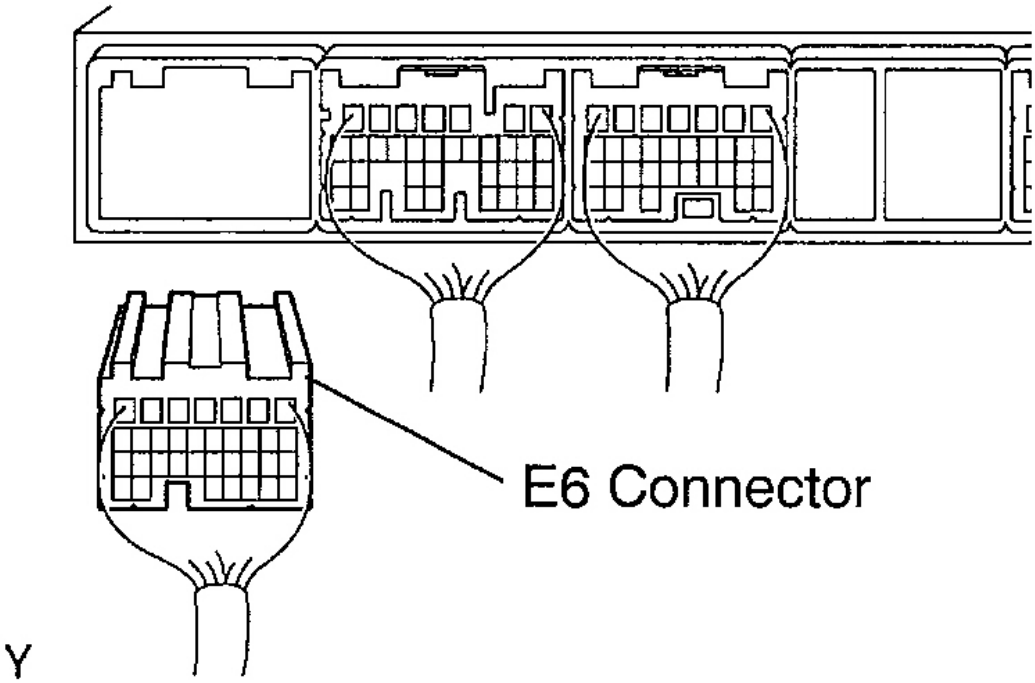

G02641777

cardiagn.com

Fig. 80: Disconnecting E6 ECM Connector
Courtesy of TOYOTA MOTOR SALES, U.S.A., INC.

OK: Repair or replace harness and connector.

NG: Replace ECM (see ENGINE CONTROL MODULE (ECM)).

DTC P0115, P0117, P0118: ENGINE COOLANT TEMPERATURE CIRCUIT LOW/HIGH INPUT

CIRCUIT DESCRIPTION

A thermistor is built in the Engine Coolant Temperature (ECT) sensor and changes the resistance value according to the engine coolant temperature.

The structure of the sensor and connection to the ECM is the same as those of the Intake Air Temperature (IAT) sensor.

HINT:

If the ECM detects the DTC "P0115, P0117 or P0118", it operates the fail-safe function in which the ECT is assumed to be 80°C (176°F).

DTC No.	Proceed to	DTC Detection Condition	Trouble Area
P0115	Step 1	Open or short in ECT sensor circuit for 0.5 seconds	•Open or short in ECT sensor circuit •ECT sensor •ECM
P0117	Step 4	Short in ECT sensor circuit for 0.5 seconds	
P0118	Step 2	Open in ECT sensor circuit for 0.5 seconds	

G02641778

Fig. 81: DTC P0115, P0117 & P0118 - Problem Symptom Diagnostic Chart
Courtesy of TOYOTA MOTOR SALES, U.S.A., INC.

HINT:

After confirming DTC "P0115, P0117 or P0118", use the hand-held tester or the OBD II scan tool to confirm the engine coolant temperature from the DIAGNOSIS / ENHANCED OBD II / DATA LIST / ALL.

TEMPERATURE DISPLAYED AND MALFUNCTION

Temperature Displayed	Malfunction
-40°C (-40°F)	Open circuit
140°C (284°F) or more	Short circuit

MONITOR DESCRIPTION

The ECT sensor is used to monitor the engine coolant temperature. The ECT sensor has a thermistor that varies

cardiagn.com

its resistance depending on the temperature of the engine coolant. When the coolant temperature is low, the resistance in the thermistor increases. When the temperature is high, the resistance drops. The variations in resistance are reflected in the voltage output from the sensor.

The ECM monitors the sensor voltage and uses this value to calculate the engine coolant temperature.

When the sensor output voltage deviates from the normal operating range, the ECM interprets this as a fault in the ECT sensor and sets a DTC.

Example:

When the ECM calculates that the ECT is less than -40°C (-40°F), or more than 140°C (284°F), and if either the condition continues for 0.5 seconds or more, the ECM will set a DTC.

MONITOR STRATEGY

MONITOR STRATEGY

Related DTCs	P0115: ECT sensor range check (Fluttering)
Related DTCs	P0117: ECT sensor range check (Low voltage) P0118: ECT sensor range check (High voltage)
Required sensors/components (Main)	ECT sensor
Required sensors/components (Related)	-
Frequency of operation	Continuous
Duration	0.5 sec.
MIL operation	Immediate
Sequence of operation	None

TYPICAL ENABLING CONDITIONS

TYPICAL ENABLING CONDITIONS

The monitor will run whenever the following DTCs are not present	None

TYPICAL MALFUNCTION THRESHOLDS

P0115:

TYPICAL MALFUNCTION THRESHOLDS (P0115)

ECT sensor resistance	Less than 79 ohm or more than 156 ohm

P0117:

TYPICAL MALFUNCTION THRESHOLDS (P0117)

ECT sensor resistance [ECT]	Less than 79 ohm [More than 140°C (284°F)]

P0118:

cardiagn.com

TYPICAL MALFUNCTION THRESHOLDS (P0118)

ECT sensor resistance [ECT]	More than 156 kohm [Less than -40°C (-40°F)]

COMPONENT OPERATING RANGE

COMPONENT OPERATING RANGE

ECT sensor resistance [ECT]	79 ohm to 156 kohm [-40 to 140°C (-40 to 284°F)]

WIRING DIAGRAM

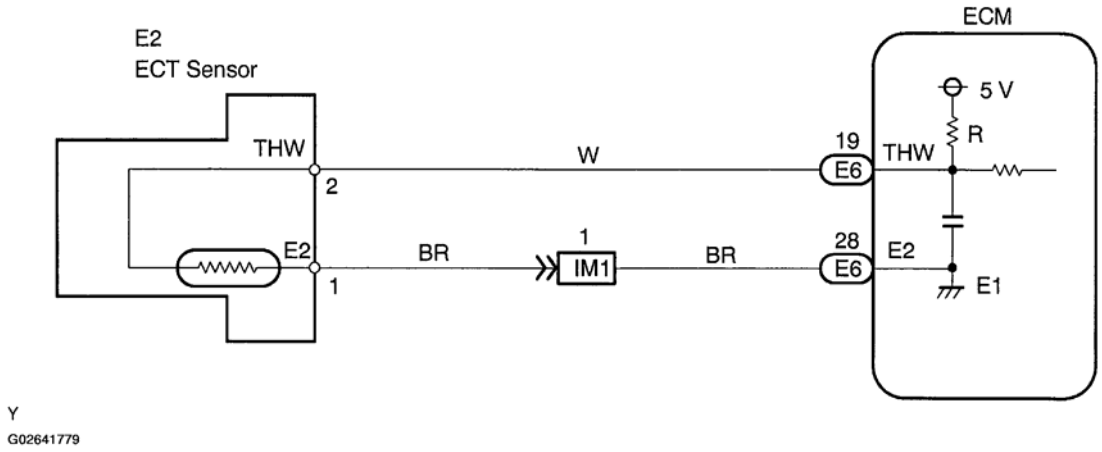

Fig. 82: Wiring Diagram - Engine Coolant Temperature Circuit
Courtesy of TOYOTA MOTOR SALES, U.S.A., INC.

INSPECTION PROCEDURE

HINT:

- If different DTCs that are related to different systems are output simultaneously while terminal E2 is used as a ground terminal, terminal E2 may be open.
- Read freeze frame data using the hand-held tester or the OBD II scan tool. Freeze frame data records the engine conditions when a malfunction is detected. When troubleshooting, freeze frame data can help determine if the vehicle was running or stopped, if the engine was warmed up or not, if the air-fuel ratio was lean or rich, and other data from the time the malfunction occurred.

1. **Connect hand-held tester or OBD II scan tool and read value of engine coolant temperature.**

   PREPARATION:

   a. Connect the hand-held tester or the OBD II scan tool to the DLC3.
   b. Turn the ignition switch ON.
   c. Push the hand-held tester or OBD II scan tool main switch ON.

cardiagn.com

d. On the hand-held tester or OBD II scan tool, enter the following menus: DIAGNOSIS / ENHANCED OBD II / DATA LIST / ALL / COOLANT TEMP.

CHECK:

Read the temperature value on the hand-held tester or the OBD II scan tool.

OK:

Same value as the actual engine coolant temperature.

HINT:

- If there is open circuit, hand-held tester or OBD II scan tool indicates -40°C (-40°F).
- If there is short circuit, hand-held tester or OBD II scan tool indicates 140°C (284°F) or more.

NG: -40°C (-40°F) ..... Go to step 2. 140°C (284°F) or more ..... Go to step 4.

OK: Check for intermittent problems (see PRE-CHECK).

2. **Check for open in harness or ECM.**

PREPARATION:

a. Disconnect the ECT sensor connector.
b. Connect terminals 1 and 2 of the ECT sensor wire harness side connector.
c. Connect the hand-held tester or OBD II scan tool to the DLC3.
d. Turn the ignition switch ON.
e. Push the hand-held tester or OBD II scan tool main switch ON.

cardiagn.com

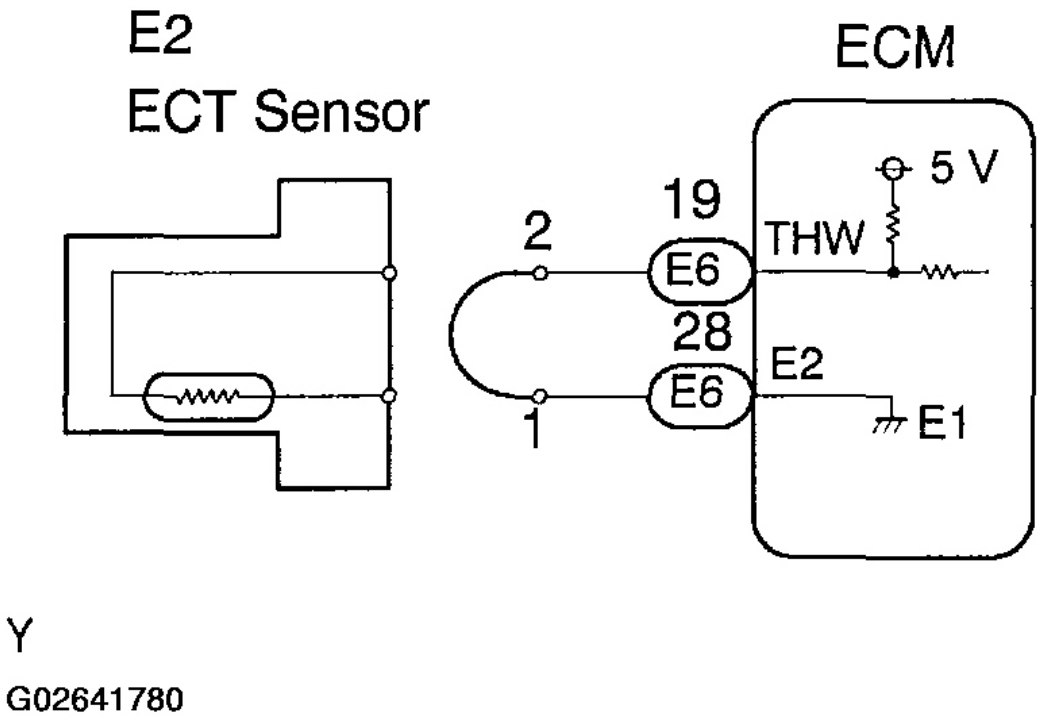

Fig. 83: Connecting Terminals 1 & 2 Of ECT Sensor Wire Harness Side Connector
Courtesy of TOYOTA MOTOR SALES, U.S.A., INC.

f. On the hand-held tester or OBD II scan tool, enter the following menus: DIAGNOSIS / ENHANCED OBD II / DATA LIST / ALL / COOLANT TEMP.

CHECK:

Read the temperature value on the hand-held tester or the OBD II scan tool.

OK:

Temperature value: 140°C (284°F) or more

OK: Confirm good connection at sensor. If OK, replace engine coolant temperature sensor.
NG: Go To Next Step.

3. **Check for open in harness or ECM.**

PREPARATION:

a. Disconnect the ECT sensor connector.

cardiagn.com

b. Connect terminals THW and E2 of the ECM connector.

   HINT:

   Before checking, perform a visual and contact pressure check for the ECU connector.

c. Connect the hand-held tester or OBD II scan tool to the DLC3.
d. Turn the ignition switch ON.
e. Push the hand-held tester or OBD II scan tool main switch ON.
f. On the hand-held tester or OBD II scan tool, enter the following menus: DIAGNOSIS / ENHANCED OBD II / DATA LIST / ALL / COOLANT TEMP.

CHECK:

Read the temperature value on the hand-held tester or the OBD II scan tool.

OK:

Temperature value: 140°C (284°F) or more

cardiagn.com

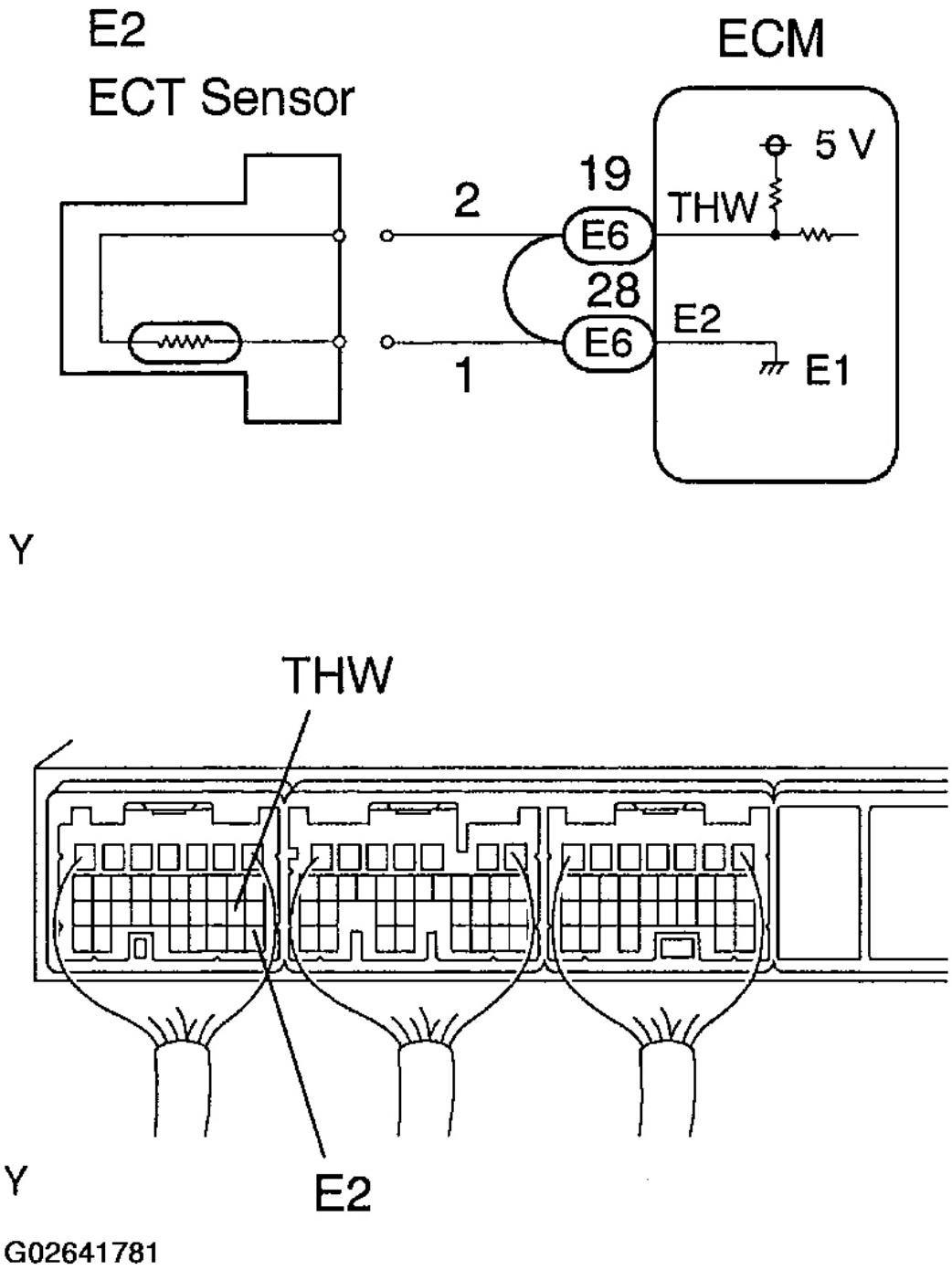

Fig. 84: Identifying Terminals THW & E2 Of ECM Connector
Courtesy of TOYOTA MOTOR SALES, U.S.A., INC.

cardiagn.com

OK: Open in harness between terminals E2 or THW, repair or replace harness.

NG: Confirm good connection at ECM. If OK, replace ECM (see ENGINE CONTROL MODULE (ECM)).

4. **Check for short in harness and ECM.**

PREPARATION:

a. Disconnect the ECT sensor connector.
b. Connect the hand-held tester or OBD II scan tool to the DLC3.
c. Turn the ignition switch ON.
d. Push the hand-held tester or OBD II scan tool main switch ON.
e. On the hand-held tester or OBD II scan tool, enter the following menus: DIAGNOSIS / ENHANCED OBD II / DATA LIST / ALL / COOLANT TEMP.

CHECK:

Read the temperature value on the hand-held tester or the OBD II scan tool.

OK:

Temperature value: -40°C (-40°F)

cardiagn.com

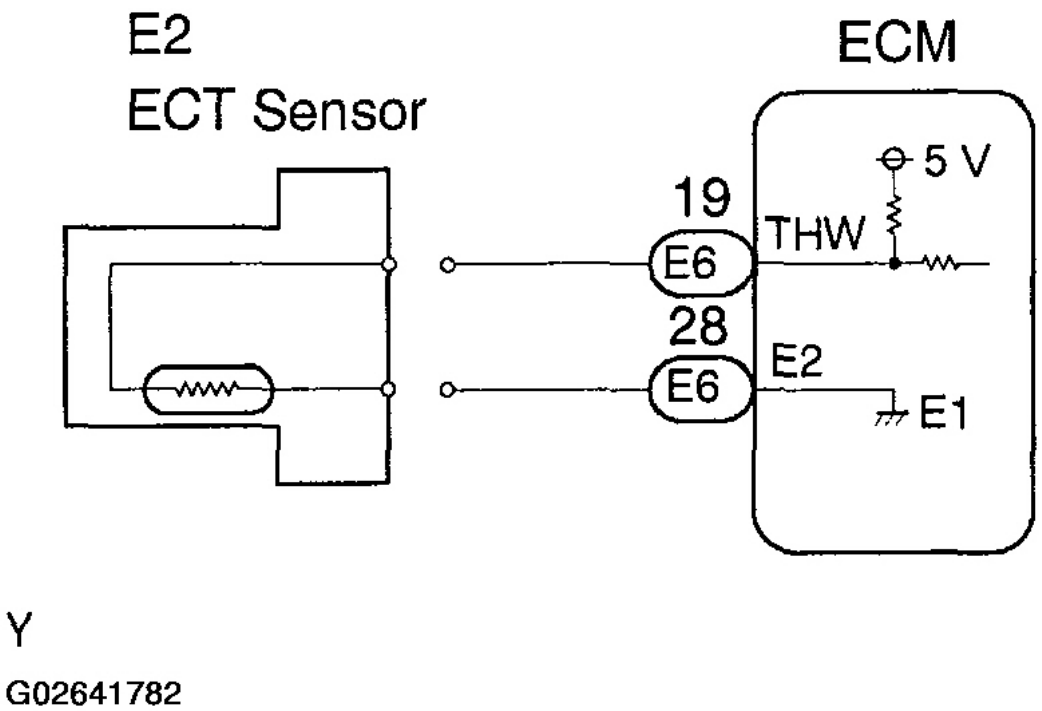

Fig. 85: Disconnecting ECT Sensor Connector
Courtesy of TOYOTA MOTOR SALES, U.S.A., INC.

OK: Replace ECT sensor.

NG: Go To Next Step.

5. **Check for short in harness or ECM.**

PREPARATION:

a. Disconnect the E6 ECM connector.
b. Connect the hand-held tester or OBD II scan tool to the DLC3.
c. Turn the ignition switch ON.
d. Push the hand-held tester or OBD II scan tool main switch ON.
e. On the hand-held tester or OBD II scan tool, enter the following menus: DIAGNOSIS / ENHANCED OBD II / DATA LIST / ALL / COOLANT TEMP.

CHECK:

Read the temperature value on the hand-held tester or the OBD II scan tool.

cardiagn.com

OK:

Temperature value: -40°C (-40°F)

cardiagn.com

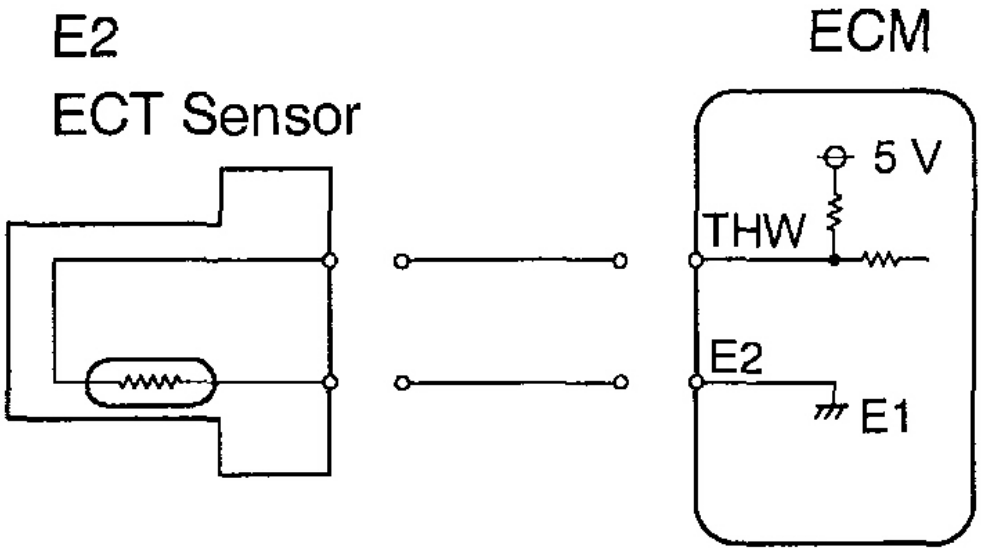

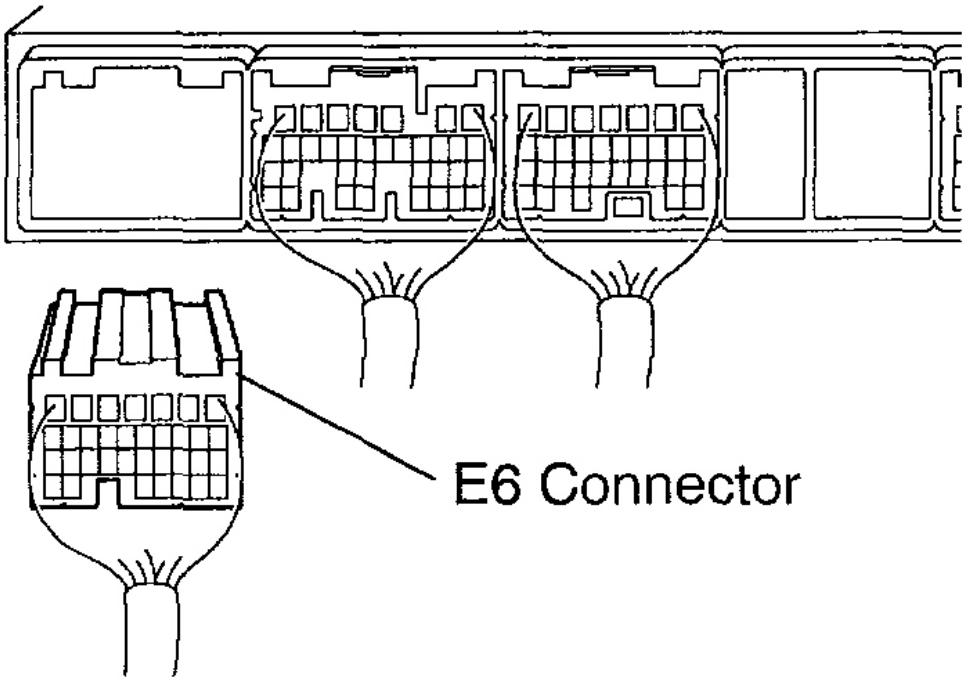

Y

G02641783

cardiagn.com

Fig. 86: Disconnecting E6 ECM Connector
Courtesy of TOYOTA MOTOR SALES, U.S.A., INC.

OK: Repair or replace harness and connector.

NG: Replace ECM (seeENGINE CONTROL MODULE (ECM)).

DTC P0116: ENGINE COOLANT TEMPERATURE CIRCUIT RANGE/PERFORMANCE PROBLEM

CIRCUIT DESCRIPTION

Refer to circuit description under **DTC P0115 ENGINE COOLANT TEMPERATURE CIRCUIT, DTC P0117 ENGINE COOLANT TEMPERATURE CIRCUIT LOW INPUT, DTC P0118 ENGINE COOLANT TEMPERATURE CIRCUIT HIGH INPUT**.

DTC No.	DTC Detecting Condition	Trouble Area
P0116	If ECT was between 35˚C (95˚F) and 60˚C (140˚F) when engine started, and also conditions (a) and (b) are met: (a) Vehicle has run with acceleration and deceleration (b) ECT still remains within 3˚C (5.4˚F) of starting temperature	• Cooling system • ECT sensor
	If ECT was more than 60˚C (140˚F) when engine started, and also conditions (a) and (b) are met: (a) Vehicle speed is fluctuating (b) ECT does not rise more than 1˚C (1.8˚F) (Temperature variation successively recorded 6 times)	

G02641784

Fig. 87: DTC P0116 - DTC Detection Condition Chart
Courtesy of TOYOTA MOTOR SALES, U.S.A., INC.

MONITOR DESCRIPTION

The Engine Coolant Temperature (ECT) sensor is used to monitor the engine coolant temperature. The ECT sensor has a thermistor that varies its resistance depending on the temperature of the engine coolant. When the coolant temperature is low, the resistance in the thermistor increases. When the temperature is high, the resistance drops. The variations in resistance are reflected in the voltage output from the sensor. The ECM monitors the sensor voltage and uses this value to calculate the engine coolant temperature. When the sensor output voltage deviates from the normal operating range, the ECM interprets this as a fault in the ECT sensor and sets a DTC.

Examples:

1. Upon starting the engine, the ECT is between 35°C (95°F) and 60°C (140°F). If after driving for 250 seconds, the ECT still remains within 3°C (5.4°F) of the starting temperature, a DTC will be set (2 trip detection logic).
2. Upon starting the engine, the ECT is over 60°C (140°F). If, after driving for 250 seconds, the ECT still remains within 1°C (1.8°F) of the starting temperature, a DTC will be set (6 trip detection logic).

MONITOR STRATEGY

cardiagn.com

MONITOR STRATEGY

Related DTCs	P0116: ECT sensor stuck at Low ECT P0116: ECT sensor stuck at High ECT
Required sensors/components (Main)	ECT sensor
Required sensors/components (Related)	CKP sensor, IAT sensor, MAF meter
Frequency of operation	Continuous
Duration	250 sec. or more
MIL operation	2 driving cycles: ECT sensor stuck at Low ECT 6 driving cycles: ECT sensor stuck at High ECT
Sequence of operation	None

TYPICAL ENABLING CONDITIONS

TYPICAL ENABLING CONDITIONS

The monitor will run whenever the following DTCs are not present	P0100 to P0103: MAF meter

ECT Sensor Stuck at Low ECT:

TYPICAL ENABLING CONDITIONS (ECT SENSOR STUCK AT LOW ECT)

Cumulative idle off period	250 sec. or more
Speed increase by 30 km/h (19 mph) or more	10 times or more
ECT	35 to 60°C (95 to 140°F)
IAT	-6.7°C (20°F) or more

ECT Sensor Stuck at High ECT:

TYPICAL ENABLING CONDITIONS (ECT SENSOR STUCK AT HIGH ECT)

ECT	60°C (140°F) or more
IAT	-6.7°C (20°F) or more
"Stop and go"(1)	Once or more
"Steady driving and stop"(2)	Once or more

(1) Vehicle is stopped for 20 seconds or more and accelerated to more than 70 km/h (44 mph) within 40 seconds.

(2) Vehicle is driven by 65 km/h (40 mph) or more for 30 sec or more and the vehicle speed reaches 70 km/h (44 mph). The vehicle is decelerated from 65 km/h (40 mph) to 3 km/h (2 mph) or less within 35 seconds and stopped for 10 seconds.

TYPICAL MALFUNCTION THRESHOLDS

ECT Sensor Stuck at Low ECT:

TYPICAL MALFUNCTION THRESHOLDS (ECT SENSOR STUCK AT LOW ECT)

ECT change	Less than 3°C (5.4°F)

cardiagn.com

ECT Sensor Stuck at High ECT:

TYPICAL MALFUNCTION THRESHOLDS (ECT SENSOR STUCK AT HIGH ECT)

ECT change	1°C (1.8°F) or less

COMPONENT OPERATING RANGE

COMPONENT OPERATING RANGE

ECT	Varies with actual ECT

INSPECTION PROCEDURE

HINT:

- If DTCs P0115, P0116, P0117, P0118 and P0125 are output simultaneously, the ECT sensor circuit may be open or shorted. Perform the troubleshooting of DTC P0115, P0117 or P0118 first.
- Read freeze frame data using the hand-held tester or the OBD II scan tool. Freeze frame data records the engine conditions when the malfunction is detected. When troubleshooting, freeze frame data can help determine if the vehicle was running or stopped, if the engine was warmed up or not, if the air-fuel ratio was lean or rich, and other data from the time the malfunction occurred.

  Replace ECT sensor.

DTC P0120, P0122, P0123, P0220, P0222, P0223, P2135: THROTTLE/PEDAL POSITION SENSOR/SWITCH "A & B" CIRCUIT MALFUNCTION LOW/HIGH INPUT & THROTTLE/PEDAL POSITION SENSOR/SWITCH "A & B" VOLTAGE CORRECTION

HINT:

This is the purpose of the "throttle position sensor".

CIRCUIT DESCRIPTION

HINT:

- This Electronic Throttle Control System (ETCS) does not use a throttle cable.
- This throttle position sensor is non-contact type.

The throttle position sensor is mounted on the throttle body and it detects the opening angle of the throttle valve. This sensor is electronically controlled and uses Hall-effect elements, so that accurate control and reliability can be obtained. The throttle position sensor has 2 sensor elements/single outputs: VTA1 and VTA2. VTA1 is used to detect the throttle opening angle and VTA2 is used to detect malfunctions in VTA1. Voltage applied to VTA1 and VTA2 change between 0 V and 5 V in proportion to the opening angle of the throttle valve. This sensor includes 2 signals, VTA1 and VTA2. VTA1 is used to detect the throttle opening angle and VTA2 is used to detect malfunctions in VTA1. There are several checks that the ECM performs to confirm proper operation of the throttle position sensor and VTA1.

cardiagn.com

The ECM judges the current opening angle of the throttle valve from these signals input from terminals VTA1 and VTA2, and the ECM controls the throttle motor to make the throttle valve angle properly in response to driver inputs.

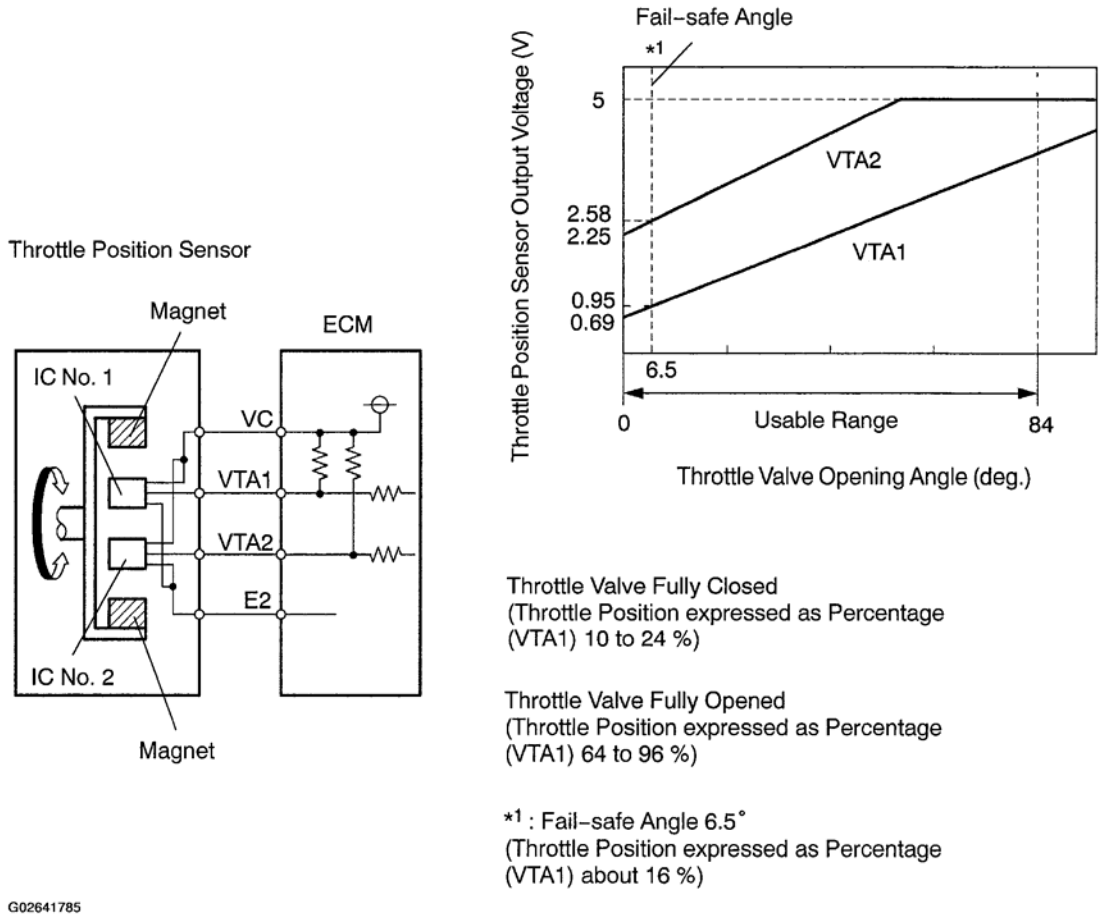

Fig. 88: Circuit Diagram - Throttle/Pedal Position Sensor
Courtesy of TOYOTA MOTOR SALES, U.S.A., INC.

cardiagn.com

DTC No.	DTC Detection Condition	Trouble Aria
Condition (a) of DTC P0120, P0122, P0123, P0220, P0222 or P0223 continues for 2 seconds (open or short in throttle position sensor circuit)		
P0120	Detection conditions for DTCs P0122 and P0123 are not satisfied but condition (a) is satisfied (a) VTA1 is "0.2 V or less" or VTA1 is "4.8 V or more"	• Throttle position sensor (built in throttle body) • ECM
P0122	(a) VTA1 is 0.2 V or less	• Throttle position sensor (built in throttle body) • Short in VTA1 circuit • Open in VC circuit • ECM
P0123	(a) VTA1 is 4.8 V or more	• Throttle position sensor (built in throttle body) • Open in VTA1 circuit • Open in E2 circuit • Short in VC and VTA1 circuit • ECM
P0220	Detection conditions for DTCs P0222 and P0223 are not satisfied but condition (a) is satisfied (a) VTA2 is "0.5 V or less" or VTA2 is "4.8 V or more" and VTA1 is "0.2 V or more" and VTA1 is "1.8 V or less"	• Throttle position sensor (built in throttle body) • ECM
P0222	(a) VTA2 is 0.5 V or less	• Throttle position sensor (built in throttle body) • Short in VTA2 circuit • Open in VC circuit • ECM
P0223	(a) VTA2 is "4.8 V or more" and VTA1 is "0.2 V or more" and VTA1 is "1.8 V or less"	• Throttle position sensor (built in throttle body) • Open in VTA2 circuit • Open in E2 circuit • Short in VC and VTA2 circuit • ECM
P2135	Condition (a) continues for 0.5 seconds or more, or condition (b) continues for 0.4 seconds, or more: (a) Difference between VTA1 and VTA2 is 0.02 V or less (b) VTA1 is "0.2 V or less" and VTA2 is "0.5 V or less"	• Short in VTA1 and VTA2 circuit • Throttle position sensor (built in throttle body) • ECM

G02641786

Fig. 89: DTC P0120, P0122, P0123, P0220, P0222, P0223 & P2135 - Problem Symptom Diagnostic Chart
Courtesy of TOYOTA MOTOR SALES, U.S.A., INC.

NOTE: When a malfunction is detected, the throttle valve is locked at a certain opening angle. Also, all electronic throttle operations are inoperable until the system returns to normal or the ignition switch is turned OFF

HINT:

- After confirming DTCs, use the hand-held tester or the OBD II scan tool to confirm the throttle valve opening percentage and closed throttle position switch condition.
- THROTTLE POS is a VTA1 signal and the THROTTLE POS #2 is a VTA2 signal.

Reference (Normal condition):

THROTTLE VALVE OPENING PERCENTAGE

Tester display	Accelerator pedal fully released	Accelerator pedal fully depressed

cardiagn.com

THROTTLE POS	10 to 24%	64 to 96 %
THROTTLE POS #2	2.1 to 3.1 V	4.5 to 5.5 V

MONITOR DESCRIPTION

The ECM uses the throttle position sensor to monitor the throttle valve opening angle.

a. There is a specific voltage difference expected between VTA1 and VTA2 for each throttle opening angle.
   - If the difference between VTA1 and VTA2 is incorrect, the ECM interprets this as a fault and will set a DTC.
b. VTA1 and VTA2 each have a specific voltage operating range.
   - If VTA1 or VTA2 is out of the normal operating range, the ECM interprets this as a fault and will set a DTC.
c. VTA1 and VTA2 should never be close to the same voltage levels.
   - If VTA1 is within 0.02 V of VTA2, the ECM interprets this as a short circuit in the throttle position sensor system and will set a DTC.

FAIL-SAFE

If the Electronic Throttle Control System (ETCS) has a malfunction, the ECM cuts off current to the throttle control motor. The throttle control valve returns to a predetermined opening angle (approximately 16°) by the force of the return spring. The ECM then adjusts the engine output by controlling the fuel injection (intermittent fuel-cut) and ignition timing in accordance with the accelerator pedal opening angle to enable the vehicle to continue at a minimal speed.

If the accelerator pedal is depressed firmly and slowly, the vehicle can be driven slowly.

If a "pass" condition is detected and then the ignition switch is turned OFF, the fail-safe operation will stop and the system will return to normal condition.

MONITOR STRATEGY

Related DTCs	P0120: TP sensor 1 range check (Fluttering) P0122: TP sensor 1 range check (Low voltage) P0123: TP sensor 1 range check (High voltage) P0220: TP sensor 2 range check (Fluttering) P0222: TP sensor 2 range check (Low voltage) P0223: TP sensor 2 range check (High voltage) P2135: TP sensor range check (Correlation)
Required sensors/ components (Main)	TP sensor
Required sensors/ components (Related)	–
Frequency of operation	Continuous
Duration	2 sec.
MIL operation	Immediate
Sequence of operation	None

G02641787

cardiagn.com

Fig. 90: Monitor Strategy Chart
Courtesy of TOYOTA MOTOR SALES, U.S.A., INC.

TYPICAL ENABLING CONDITIONS

TYPICAL ENABLING CONDITIONS

The monitor will run whenever the following DTCs are not present	None
Ignition switch and electronic throttle motor power	ON

TYPICAL MALFUNCTION THRESHOLDS

P0120:

TYPICAL MALFUNCTION THRESHOLDS (P0120)

VTA1 voltage	0.2 V or less or 4.8 V or more

P0122:

TYPICAL MALFUNCTION THRESHOLDS (P0122)

VTA1 voltage	0.2 V or less

P0123:

TYPICAL MALFUNCTION THRESHOLDS (P0123)

VTA2 voltage	4.8 V or more

P0220:

TYPICAL MALFUNCTION THRESHOLDS (P0220)

VTA2 voltage	0.5 V or less or 4.8 V or more

P0222:

TYPICAL MALFUNCTION THRESHOLDS (P0222)

VTA2 voltage	0.5 V or less

P0223:

TYPICAL MALFUNCTION THRESHOLDS (P0223)

VTA2 voltage when the VTA1 is 0.2 to 1.8 V	4.8 V or more

P2135:

TYPICAL MALFUNCTION THRESHOLDS (P02135)

cardiagn.com

Both of the following condition(s) is met:	Condition A or B
Condition A	
Difference between VTA1 and VTA2 voltage	0.02 V or less
Condition B	
Both of the following condition is met	(a) and (b)
(a) VTA1 voltage	0.2 V or less
(b) VTA2 voltage	0.5 V or less

COMPONENT OPERATING RANGE

COMPONENT OPERATING RANGE

VTA1 voltage	0.6 to 3.96 V
VTA2 voltage	2.25 to 4.8 V

WIRING DIAGRAM

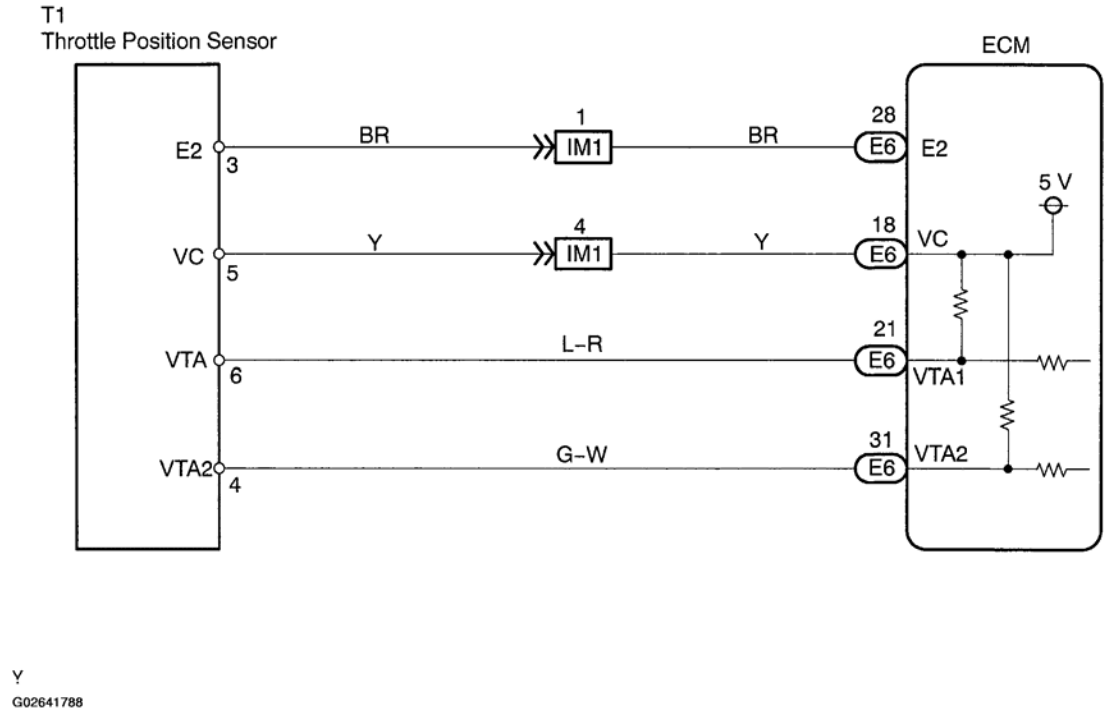

Fig. 91: Wiring Diagram - Throttle/Pedal Position Sensor Circuit
Courtesy of TOYOTA MOTOR SALES, U.S.A., INC.

INSPECTION PROCEDURE

HINT:

- If different DTCs that are related to different systems are output simultaneously while terminal E2 is used

cardiagn.com

as a ground terminal, terminal E2 may be open.

- Read freeze frame data using the hand-held tester or the OBD II scan tool. Freeze frame data records the engine conditions when a malfunction is detected. When troubleshooting, freeze frame data can help determine if the vehicle was running or stopped, if the engine was warmed up or not, if the air-fuel ratio was lean or rich, and other data from the time the malfunction occurred.

Hand-held tester:

1. **Connect hand-held tester and read voltage for throttle position sensor data.**

   PREPARATION:

   a. Connect the hand-held tester to DLC3.
   b. Turn ON the ignition switch. Push the hand-held tester main switch ON.
   c. On the hand-held tester, enter the following menus: DIAGNOSIS / ENHANCED OBD II / DATA LIST / ETCS / THROTTLE POS and THROTTLE POS #2.

   CHECK:

   Read the voltage for the accelerator pedal position sensor data.

   RESULT:

Throttle position expressed as percentage and voltage				Trouble area	Proceed to
Accelerator pedal released		Accelerator pedal depressed			
THROTTLE POS (VTA1)	THROTTLE POS #2 (VTA2)	THROTTLE POS (VTA1)	THROTTLE POS #2 (VTA2)		
0 %	0 to 0.2 V	0 %	0 to 0.2 V	VC circuit open	A
100 %	4.5 to 5.5 V	100 %	4.5 to 5.5 V	E2 circuit open	
0 % or 100 %	2.1 to 3.1 V (fail-safe)	0 % or 100 %	2.1 to 3.1 V (fail-safe)	VTA1 circuit open or ground short	
6 to 20 % (fail-safe)	0 to 0.2 or 4.5 to 5.5 V	about 16 % (fail-sage)	0 to 0.2 or 4.5 to 5.5 V	VTA2 circuit open or ground short	
6 to 20 %	2.1 to 3.1 V	64 to 96 % (does not fail-safe)	4.5 to 5.5 V (does not fail-safe)	Throttle position sensor circuit is normal	B

G02641789

Fig. 92: Throttle Valve Opening Percentage & Throttle Position Sensor Voltage Chart
Courtesy of TOYOTA MOTOR SALES, U.S.A., INC.

   B: Go to step 5.

   A: Go To Next Step.

2. **Check for open and short in wire harness in VC, VTA1, VTA2 and E2 circuits between ECM and throttle position sensor (see HOW TO USE THE DIAGNOSTIC CHART AND INSPECTION PROCEDURE).**

   NG: Repair or replace harness and connector.

   OK: Go To Next Step.

cardiagn.com

3. **Check voltage between terminals VC and E2 of ECM connector.**

PREPARATION:

a. Remove the glove compartment (see **ENGINE CONTROL MODULE (ECM)**).
b. Turn the ignition switch ON.
c. Disconnect the throttle position sensor connector.

CHECK:

Measure the voltage between terminals VC and E2 of the ECM connector.

OK:

Voltage: 4.5 to 5.5 V

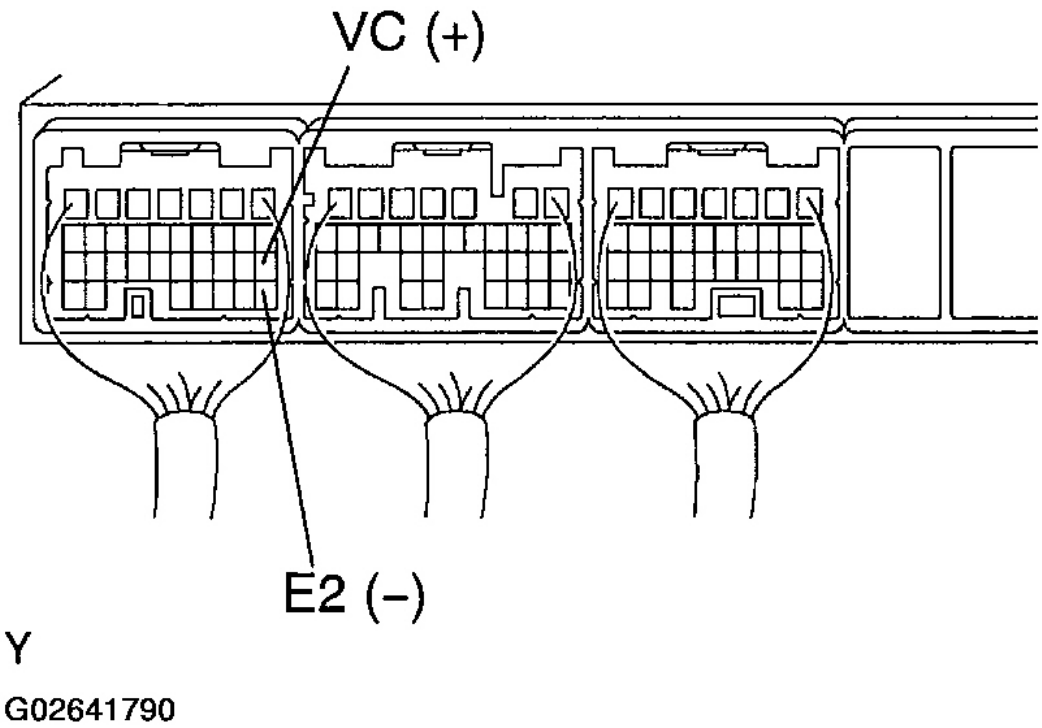

Fig. 93: Identifying Terminals VC & E2 Of ECM Connector
Courtesy of TOYOTA MOTOR SALES, U.S.A., INC.

NG: Replace ECM (see ENGINE CONTROL MODULE (ECM)).

cardiagn.com

OK: Go To Next Step.

4. **Replace throttle body (see REMOVAL).**

   OK: Go To Next Step.

5. **Check if DTC output reoccur.**

   PREPARATION:

   a. Clear the DTC (see **PRE-CHECK**).
   b. Start the engine.
   c. Drive the engine at idle for 15 seconds or more.

   CHECK:

   Read the DTC output.

   OK:

   No DTC output.

   OK: System is OK.
   NG: Replace ECM (see ENGINE CONTROL MODULE (ECM)).

OBD II scan tool (excluding hand-held tester):

1. **Check for open and short in wire harness in VC, VTA and E2 circuits between ECM and throttle position sensor (see HOW TO USE THE DIAGNOSTIC CHART AND INSPECTION PROCEDURE).**

   NG: Repair or replace harness and connector.

   OK: Go To Next Step.

2. **Check voltage between terminal VC and E2 of ECM connector.**

   PREPARATION:

   a. Remove the glove compartment (see **ENGINE CONTROL MODULE (ECM)**).
   b. Turn the ignition switch ON.
   c. Disconnect the throttle position sensor connector.

   CHECK:

   Measure the voltage between terminals VC and E2 of the ECM connector.

   OK:

   Voltage: 4.5 to 5.5 V

cardiagn.com

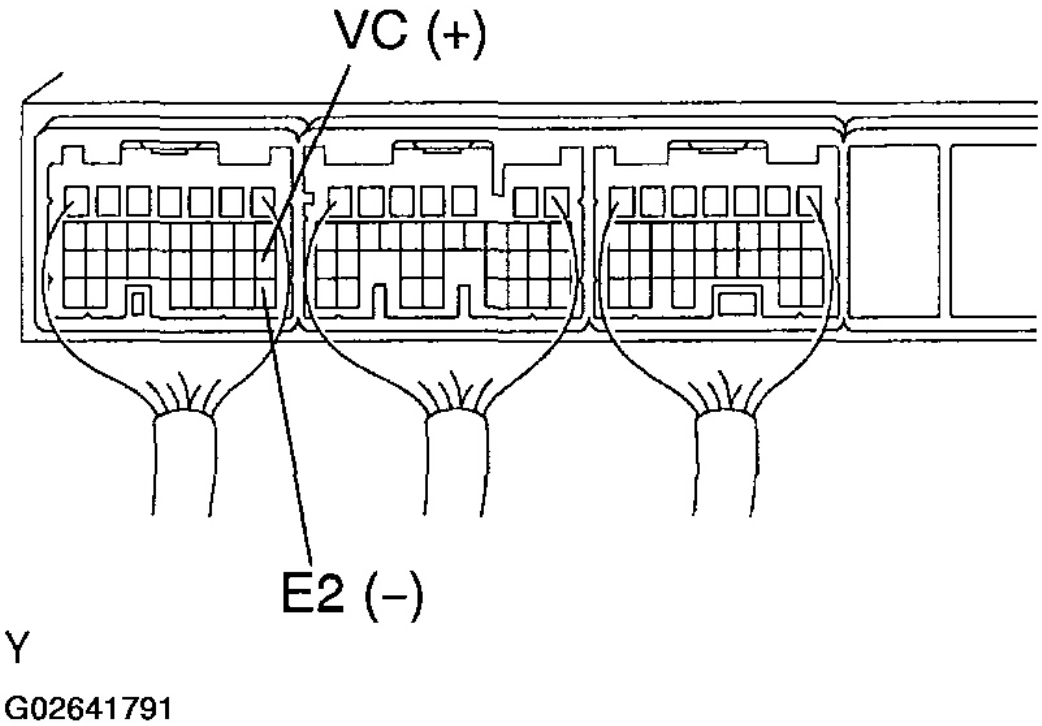

Fig. 94: Identifying Terminals VC & E2 Of ECM Connector
Courtesy of TOYOTA MOTOR SALES, U.S.A., INC.

NG: Check for open and short in harness and connector between ECM and throttle position sensor (VTA or E2 line) (see HOW TO USE THE DIAGNOSTIC CHART AND INSPECTION PROCEDURE).

OK: Go To Next Step.

3. **Replace throttle body (see REMOVAL).**

   GO: To Next Step.

4. **Check if DTC outputs reoccur.**

PREPARATION:

a. Clear the DTC (see **PRE-CHECK**).
b. Start the engine.
c. Run the engine at idle for 15 seconds or more.

CHECK:

Check whether or not DTC P0120, P0122, P0123, P0220, P0222, P0223 and/or P2135 are stored.

cardiagn.com

NG: System is OK.

OK: Replace ECM (see ENGINE CONTROL MODULE (ECM)).

DTC P0121: THROTTLE/PEDAL POSITION SENSOR/SWITCH "A" CIRCUIT RANGE/PERFORMANCE PROBLEM

HINT:

This is the purpose of the "throttle position sensor".

CIRCUIT DESCRIPTION

Refer to circuit description under **DTC P0120, P0122, P0123, P0220, P0222, P0223, P2135: THROTTLE/PEDAL POSITION SENSOR/SWITCH "A & B" CIRCUIT MALFUNCTION LOW/HIGH INPUT & THROTTLE/PEDAL POSITION SENSOR/SWITCH "A & B" VOLTAGE CORRECTION**.

DTC No.	Detection Item	Trouble Area
P0121	Condition (a) continues for 2.0 seconds: (a) Difference between VTA1 and VTA2 deviates from threshold	• Throttle position sensor

G02641792

Fig. 95: DTC P0121 - DTC Detection Condition Chart
Courtesy of TOYOTA MOTOR SALES, U.S.A., INC.

MONITOR DESCRIPTION

The ECM uses the throttle position sensor to monitor the throttle valve opening angle.

This sensor includes 2 signals: VTA1 and VTA2. VTA1 is used to detect the throttle opening angle and VTA2 is used to detect malfunctions in VTA1. There are several checks that the ECM performs to confirm proper operation of the throttle position sensor and VTA1.

There is a specific voltage difference expected between VTA1 and VTA2 for each throttle opening angle. If the voltage output difference of the VTA1 and VTA2 deviates from the normal operating range, the ECM interprets this as a malfunction of the throttle position sensor. The ECM will turn on the MIL and a DTC is set.

FAIL-SAFE

If the Electronic Throttle Control System (ETCS) has a malfunction, the ECM cuts off current to the throttle control motor. The throttle control valve returns to a predetermined opening angle (approximately 16°) by the force of the return spring. The ECM then adjusts the engine output by controlling the fuel injection (intermittent fuel-cut) and ignition timing in accordance with the accelerator pedal opening angle to enable the vehicle to continue at a minimal speed.

cardiagn.com

If the accelerator pedal is depressed firmly and slowly, the vehicle can be driven slowly.

If a "pass" condition is detected and then the ignition switch is turned OFF, the fail-safe operation will stop and the system will return to normal condition.

MONITOR STRATEGY

MONITOR STRATEGY

Related DTCs	P0121: TP sensor rationality
Required sensors/components (Main)	TP sensor
Required sensors/components (Related)	-
Frequency of operation	Continuous
Duration	2 sec.
MIL operation	Immediate
Sequence of operation	None

TYPICAL ENABLING CONDITIONS

TYPICAL ENABLING CONDITIONS

The monitor will run whenever the following DTCs are not present	None
VTA2 voltage	4.9 V or less

TYPICAL MALFUNCTION THRESHOLDS

TYPICAL ENABLING CONDITIONS

Either of the following conditions is met:	
Difference in voltage between "VTA1 - opener angle (sensor 1)" and "VTA2 x 0.8 opener angle (sensor 2)"	Less than 0.8 V or more than 1.6V

INSPECTION PROCEDURE

HINT:

Read freeze frame data using the hand-held tester or the OBD II scan tool. Freeze frame data records the engine conditions when a malfunction is detected. When troubleshooting, freeze frame data can help determine if the vehicle was running or stopped, if the engine was warmed up or not, if the air-fuel ratio was lean or rich, and other data from the time the malfunction occurred.

Replace throttle body (see REMOVAL).

DTC P0125: INSUFFICIENT COOLANT TEMPERATURE FOR CLOSED LOOP FUEL CONTROL

CIRCUIT DESCRIPTION

Refer to circuit description under **DTC P0115 ENGINE COOLANT TEMPERATURE CIRCUIT, DTC**

cardiagn.com

P0117 ENGINE COOLANT TEMPERATURE CIRCUIT LOW INPUT, DTC P0118 ENGINE COOLANT TEMPERATURE CIRCUIT HIGH INPUT.

DTC No.	DTC Detection Condition	Trouble Area
P0125	If ECT (engine coolant temperature) or IAT (intake air temperature) is less than −6.6˚C (20˚F) at engine start, 20 minutes or more after starting engine, ECT sensor value is 20˚C (68˚F) or less; (2 trip detection logic)	•Cooling system •ECT sensor •Thermostat
	If ECT and IAT is between −6.6˚C (20˚F) and 10˚C (50˚F) at engine start; 5 minutes or more after starting engine, ECT sensor value is 20˚C (68˚F) or less (2 trip detection logic)	
	If ECT and IAT greater than 10˚C (50˚F) at engine start; 2 minutes or more after starting engine, ECT sensor value is 20˚C (68˚F) or less (2 trip detection logic)	

G02641793

Fig. 96: DTC P0125 - DTC Detection Condition Chart
Courtesy of TOYOTA MOTOR SALES, U.S.A., INC.

MONITOR DESCRIPTION

The engine coolant temperature (ECT) sensor is used to monitor the temperature of the engine coolant. The resistance of the sensor varies with the actual coolant temperature. The ECM applies a voltage to the sensor and the varying resistance of the sensor causes the signal voltage to vary. The ECM monitors the ECT signal voltage after engine start-up. If, after sufficient time has passed, the sensor still reports that the engine is not warm enough for closed-loop fuel control, the ECM interprets this as a fault in the sensor or cooling system and sets a DTC.

Example:

The ECT is 0°C (32°F) at engine start. After 5 minutes running time, the ECT sensor still indicates that the engine is not warm enough to begin active feedback control of the air-fuel ratio. The ECM interprets this as a fault in the sensor or cooling system and will set a DTC.

MONITOR STRATEGY

MONITOR STRATEGY

Related DTCs	P0125: Insufficient ECT for closed loop
Required sensors/components (Main)	Thermostat, cooling system
Required sensors/components (Related)	ECT sensor, MAF meter
Frequency of operation	Continuous
Duration	2 minutes: Engine start ECT or IAT is 10°C (50°F) or more 5 minutes: Engine start ECT or IAT is -6.6 to 10°C (20 to 50°F) 20 minutes: Engine start ECT or IAT is less than -6.6°C (20°F)
MIL operation	Immediate
Sequence of operation	None

cardiagn.com

TYPICAL ENABLING CONDITIONS

TYPICAL ENABLING CONDITIONS

The monitor will run whenever the following DTCs are not present	See **PRE-CHECK**
Fuel cut	OFF
Engine	Running

TYPICAL MALFUNCTION THRESHOLDS

TYPICAL MALFUNCTION THRESHOLDS

Time until "actual ECT" reaches" Closed Loop ECT"	2 minutes: Engine start ECT or IAT is 10°C (50°F) or more 5 minutes: Engine start ECT or IAT is -6.6 to 10°C (20 to 50°F) 20 minutes: Engine start ECT or IAT is less than -6.6°C (20°F)

INSPECTION PROCEDURE

HINT:

- If DTCs P0115, P0116, P0117, P0118 and P0125 are output simultaneously, engine coolant temperature sensor circuit may be open or short. Perform the troubleshooting of DTC P0115, P0117 or P0118 first.
- Read freeze frame data using the hand-held tester or the OBD II scan tool. Freeze frame data records the engine conditions when a malfunction is detected. When troubleshooting, freeze frame data can help determine if the vehicle was running or stopped, if the engine was warmed up or not, if the air-fuel ratio was lean or rich, and other data from the time the malfunction occurred.

1. **Are there any other codes (besides DTC P0125) being out put?**
   a. Read the DTCs using the hand-held tester or the OBD II scan tool.

   RESULT:

   DTC OUTPUT

Display (DTC output)	Proceed to
Only "P0125" are output	A
"P0125" and other DTCs are output	B

   HINT:

   If any other codes besides "P0125" is output, perform the troubleshooting for those codes first.

   B: Go to relevant DTC chart (see DIAGNOSTIC TROUBLE CODE CHART).

   A: Go To Next Step.

2. **Inspect thermostat (see INSPECTION).**

cardiagn.com

CHECK:

Check the valve opening temperature of the thermostat.

HINT:

Also check that the valve is completely closed under opening temperature as above.

NG: Replace thermostat (see REMOVAL).
OK: Go To Next Step.

3. **Check cooling system.**

CHECK:

Check that there is a defect in the cooling system which causes overcool, such as abnormal radiator fan operation or modified cooling system.

NG: Repair or replace cooling system.
OK: Replace ECT sensor.

DTC P0128: COOLANT THERMOSTAT (COOLANT TEMPERATURE BELOW THERMOSTAT REGULATING TEMPERATURE)

HINT:

This is the procedure of thermostat malfunction detection.

CIRCUIT DESCRIPTION

If the engine coolant temperature (ECT) does not reach 75°C (167°F) despite sufficient warm-up time has elapsed.

DTC No.	DTC Detection condition	Trouble Area
P0128	Condition (a), (b) and (c) are met: (a) Cold start (b) After sufficient warm–up time has elapsed (c) ECT is less than 75˚C (167˚F)	• Thermostat • Cooling system • ECT sensor • ECM

G02641794

Fig. 97: DTC P0128 - DTC Detection Condition Chart
Courtesy of TOYOTA MOTOR SALES, U.S.A., INC.

MONITOR DESCRIPTION

cardiagn.com

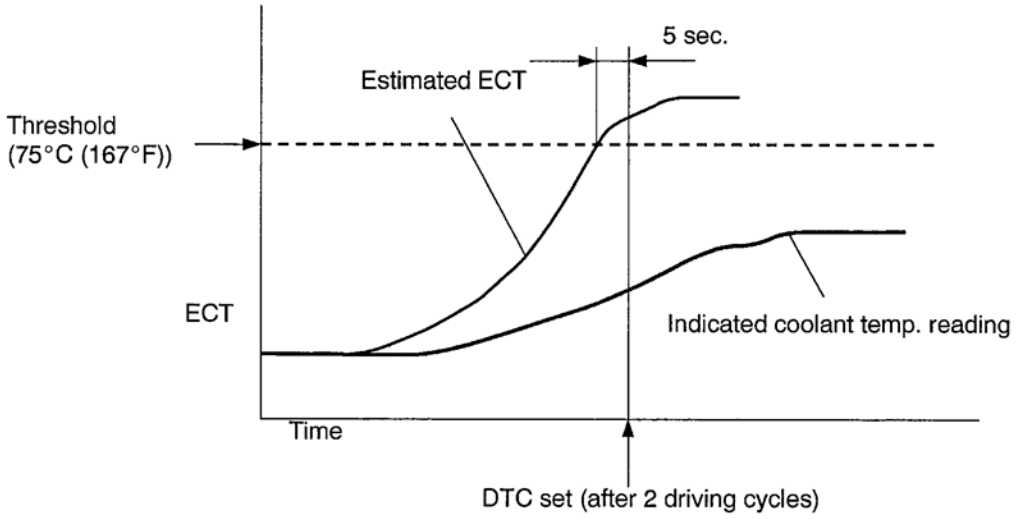

Y
G02641795

Fig. 98: Engine Coolant Temperature Graph
Courtesy of TOYOTA MOTOR SALES, U.S.A., INC.

The ECM estimates the coolant temperature based on starting temperature, engine loads, and engine speeds. The ECM then compares the estimated temperature with the actual ECT. When the estimated coolant temperature reaches 75°C (167°F), the ECM checks the actual ECT. If the actual ECT is less than 75°C (167°F), the ECM will interpret this as a fault in the thermostat or the engine cooling system and set a DTC.

MONITOR STRATEGY

MONITOR STRATEGY

Related DTCs	P0128: Coolant thermostat
Required sensors/components (Main)	Thermostat
Required sensors/components (Related)	ECT sensor, IAT sensor, VSS
Frequency of operation	Once per drive cycle
Duration	900 sec.
MIL operation	2 drive cycles
Sequence of operation	None

TYPICAL ENABLING CONDITIONS

TYPICAL ENABLING CONDITIONS

The monitor will run whenever the following DTCs are not present	See **PRE-CHECK**
Battery voltage	11 V or more

cardiagn.com

Engine start IAT	-10 to 35°C (14 to 95°F)
Engine start ECT	-10 to 35°C (14 to 95°F)
Difference between engine start ECT and engine start IAT	-15 to 7°C (-27 to 12.6°F)
Accumulated time with vehicle speed 80 mph (128km/h) or more	20 sec. or more

TYPICAL MALFUNCTION THRESHOLDS

TYPICAL MALFUNCTION THRESHOLDS

Time that both of the following conditions are met:	5 sec. or more
Estimated ECT	75°C (167°F) or more
Actual ECT	Less than 75°C (167°F)

MONITOR RESULT

Refer to **PRE-CHECK** for detailed information.

MONITOR RESULT

TEST ID	Description of TEST DATA	Conversion Factor	Unit	Standard Value
$81	ECT when estimated ECT reaches 75 °C (167 °F)	Multiply by 0.625 and minus 40	°C	75°C or more

INSPECTION PROCEDURE

HINT:

Read freeze frame data using the hand-held tester or the OBD II scan tool. Freeze frame data records the engine conditions when a malfunction is detected. When troubleshooting, freeze frame data can help determine if the vehicle was running or stopped, if the engine was warmed up or not, if the air-fuel ratio was lean or rich, and other data from the time the malfunction occurred.

1. **Check cooling system.**

   CHECK:

   Check that there is a defect in the cooling system which causes overcool, such as abnormal radiator fan operation or modified cooling system.

   NG: Repair or replace cooling system.

   YES: Go To Next Step.

2. **Check thermostat (see INSPECTION).**

   CHECK:

   Check the valve opening temperature of the thermostat.

cardiagn.com

HINT:

Also check that the valve is completely closed under opening temperature as above.

NG: Replace thermostat.
YES: Replace ECM (see ENGINE CONTROL MODULE (ECM)).

DTC P0136: OXYGEN SENSOR CIRCUIT MALFUNCTION (BANK 1 SENSOR 2)

CIRCUIT DESCRIPTION

The heated oxygen sensor (HO2S) is used to monitor oxygen in the exhaust gas. For optimum catalyst operation, the air fuel mixture (air-fuel ratio) must be maintained near the ideal "stoichiometric" ratio. The HO2S output voltage changes suddenly in the vicinity of the stoichiometric ratio. The ECM adjusts the fuel injection time so that the air-fuel ratio is nearly stoichiometric.

The HO2S generates a voltage between 0 and 1 volt in response to oxygen in the exhaust gas. If the oxygen in the exhaust gas increases, the air-fuel ratio becomes "Lean". The ECM determines Lean when the HO2S voltage is below 0.45 volts. If the oxygen in the exhaust gas increases, the air-fuel ratio becomes "Rich". The ECM determines Rich when the HO2S voltage is above 0.45 volts.

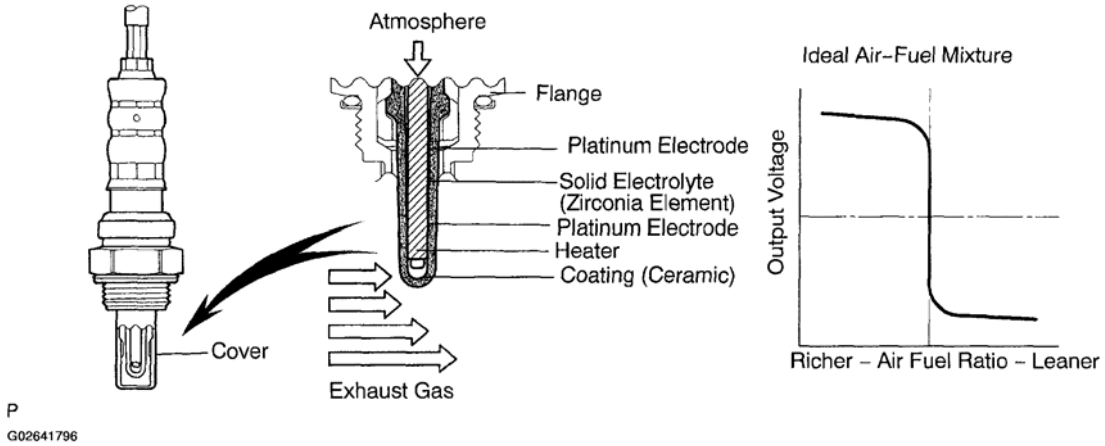

Fig. 99: Oxygen Sensor Circuit Output Voltage Graph
Courtesy of TOYOTA MOTOR SALES, U.S.A., INC.

cardiagn.com

DTC No.	DTC Detection Condition	Trouble Area
P0136	The following condition (a) or (b) or (c) is met (a) While driving with engine warmed up, heated oxygen sensor output does not change for 8 minutes (b) Heated oxygen sensor output is very low most of time during 220 second (c) The rear heated oxygen sensor voltage does not drop to below 0.2 V immediately when the vehicle decelerates and the fuel cut is operating	• Open or short in heated oxygen sensor circuit • Heated oxygen sensor • Heated oxygen sensor heater • EFI main relay

G02641797

Fig. 100: DTC P0136 - DTC Detection Condition Chart
Courtesy of TOYOTA MOTOR SALES, U.S.A., INC.

MONITOR DESCRIPTION

The ECM monitors the rear heated oxygen sensor (HO2S) in the following 3 items:

1. The HO2S voltage changes between Rich (more than 4.5 volts) and Lean (less than 4.5 volts) while the vehicle is running (repeating acceleration and deceleration) for 8 minutes. If not, the ECM interprets this as a malfunction, illuminates the MIL, and then sets DTC.
2. The HO2S voltage does not remain at less than 0.05 volts for a long time while the vehicle is running (60% of the time in the 220 second-monitor, the sensor output is less than 0.05V). If it does, the ECM interprets this as a malfunction, illuminates the MIL, and then sets a DTC.
3. The sensor's voltage drops to below 0.2 volts (extremely Lean status) immediately when the vehicle decelerates and the fuel cut is working for 7 seconds, if not, the ECM interprets this to mean the sensor's response feature has deteriorated, illuminates the MIL, and then sets DTC.

MONITOR STRATEGY

MONITOR STRATEGY

Related DTCs	P0136: Rear HO2S voltage P0136: Rear HO2S slow response P0136: Rear HO2S low voltage
Required sensors/components (Main)	Rear HO2S
Required sensors/components (Related)	ETC sensor, MAF meter, VSS
Frequency of operation	Once per drive cycle
Duration	480 sec.: Rear HO2S voltage Within 10 sec.: Rear HO2S slow response 320 sec.: Rear HO2S low voltage
MIL operation	2 driving cycles
Sequence of operation	None

TYPICAL ENABLING CONDITIONS

All:

cardiagn.com

TYPICAL ENABLING CONDITIONS (ALL)

The monitor will run whenever the following DTCs are not present	See **PRE-CHECK**

Rear HO2S Voltage:

TYPICAL ENABLING CONDITIONS (REAR HO2S VOLTAGE)

Engine	Running
Either of the following condition is set	
Cumulative time while rear HO2S heater is ON	22 sec.
Rear HO2S voltage	0.7 V or more

Rear HO2S Slow Response:

TYPICAL ENABLING CONDITIONS (REAR HO2S SLOW RESPONSE)

Rear HO2S voltage before the fuel cut	0.2 V or more
Estimated catalyst temperature	400 to 850°C (752 to 1,562°F)
ECT	70°C (158°F) or more
Fuel cut	Operating

Rear HO2S Low Voltage:

TYPICAL ENABLING CONDITIONS (REAR HO2S LOW VOLTAGE)

Vehicle speed	1 mph (3 km/h) or more
Idle	OFF
Fuel cut	OFF (for 5 sec. or more)
Intake air amount	0.32 g/rev or more
Time while rear HO2S heater is ON	80 sec. or more

TYPICAL MALFUNCTION THRESHOLDS

Rear HO2S Voltage:

TYPICAL MALFUNCTION THRESHOLDS (REAR HO2S VOLTAGE)

One of the following conditions is set:	
Number of Lean/Rich switching	None
Minimum rear HO2S voltage	0.45 V or more
Maximum rear HO2S voltage	Less than 0.6 V
Switching time from Lean to Rich	3 sec. or more
Switching time from Rich to Lean	3 sec. or more

Rear HO2S Slow Response:

TYPICAL MALFUNCTION THRESHOLDS (REAR HO2S SLOW RESPONSE)

cardiagn.com

Time until the rear HO2S voltage drops to below 0.2 V after fuel-cut starting	7 sec. or more

Rear HO2S Low Voltage:

TYPICAL MALFUNCTION THRESHOLDS (REAR HO2S LOW VOLTAGE)

Percentage of time when the sensor voltage was smaller than 0.05 V	60 % or more
Percentage of time when the sensor voltage was higher than 0.7 V	Within 20%
Time when the sensor voltage was higher than 0.45 V	Within 20 sec.
Percentage of time when the sensor voltage was higher than 0.45 V	Less than 40%

COMPONENT OPERATING RANGE

COMPONENT OPERATING RANGE

Rear HO2S voltage	Varies between 0.1 and 0.9 V

O2S TEST RESULT

Refer to **PRE-CHECK** for detailed information.

Rear HO2S Voltage:

If the value is out of the standard value, the ECM interprets this as a malfunction and sets DTC.

O2S TEST RESULT (REAR HO2S VOLTAGE)

TEST ID	Description of TEST DATA	Conversion Factor	Unit	Standard Value
$07	Minimum rear HO2S voltage	N/A	V	Below 0.45 V
$08	Maximum rear HO2S voltage	N/A	V	0.6 V or more
$31	Time that rear HO2S output changes Lean to Rich	N/A	sec.	Below 3 sec.
$32	Time that rear HO2S output changes Rich to Lean	N/A	sec.	Below 3 sec.

Rear HO2S Slow Response:

If the time is out of the standard value, the ECM interprets this as a malfunction and sets DTC.

O2S TEST RESULT (REAR HO2S SLOW RESPONSE)

TEST ID	Description of TEST DATA	Conversion Factor	Unit	Standard Value
$37	Time until rear HO2S voltage drops to below 0.2 V after fuel-cut starting	N/A	sec.	Below 7 sec.

Rear HO2S Low Voltage:

If all the values ($81, $84, $85 and $87) are out of the standard values, the ECM interprets this as a malfunction and sets DTC.

cardiagn.com

O2S TEST RESULT (REAR HO2S LOW VOLTAGE)

TEST ID	Description of TEST DATA	Conversion Factor	Unit	Standard Value
$81	Percentage in monitor time where rear HO2S voltage is below 0.05 V	Multiply 0.3906	%	Within 60%
$84	Percentage in monitor time where rear HO2S voltage is 0.7 V or more	Multiply 0.3906	%	20% or more
$85	Continuous time that rear HO2S voltage is 0.45 V or more	Multiply 0.2621	sec.	20 sec. or more
$87	Percentage in monitor time where rear HO2S voltage is 0.45 V or more	Multiply 0.3906	%	40% or more

WIRING DIAGRAM

cardiagn.com

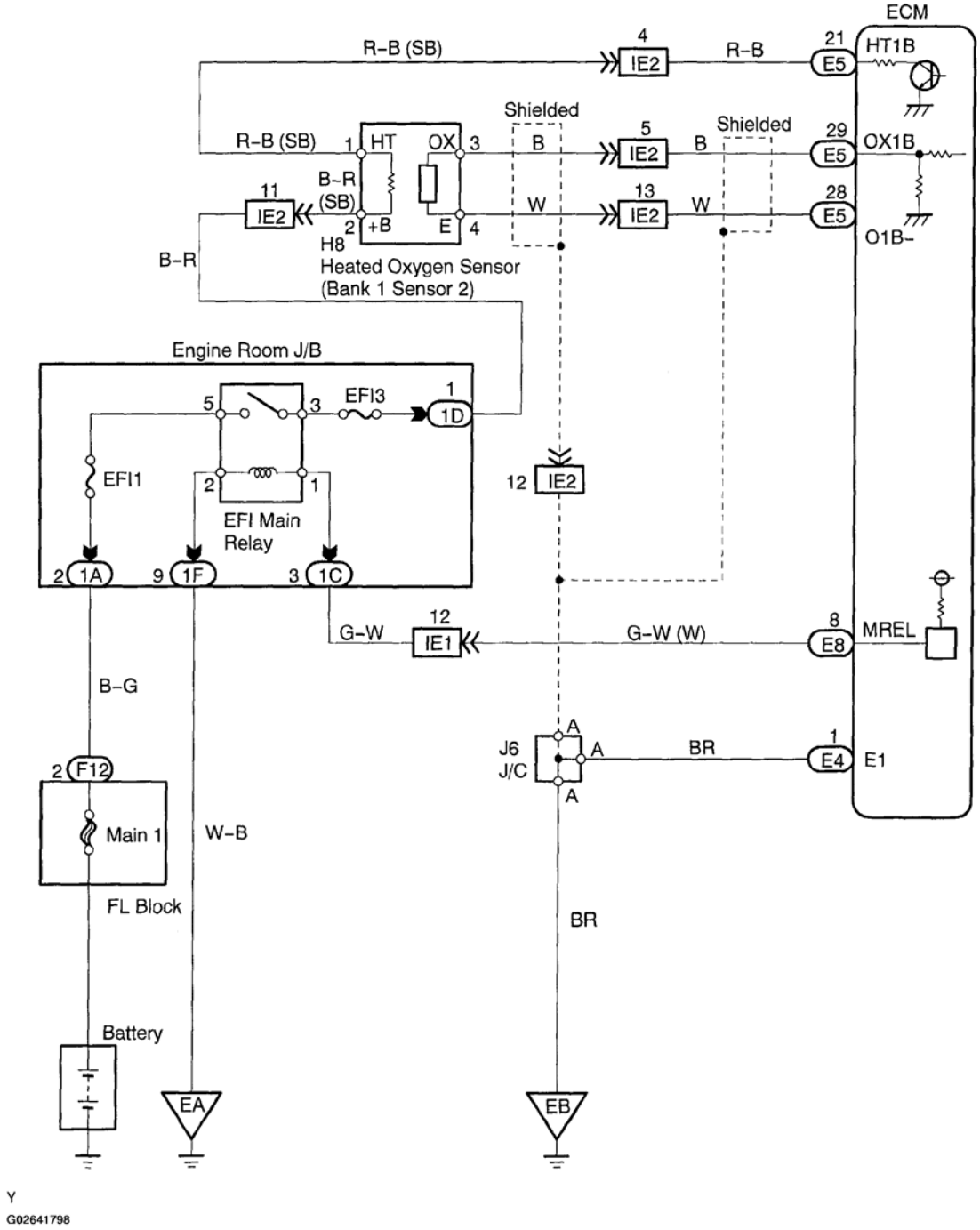

Fig. 101: Wiring Diagram - Oxygen Sensor Circuit
Courtesy of TOYOTA MOTOR SALES, U.S.A., INC.

CONFIRMATION DRIVING PATTERN

cardiagn.com

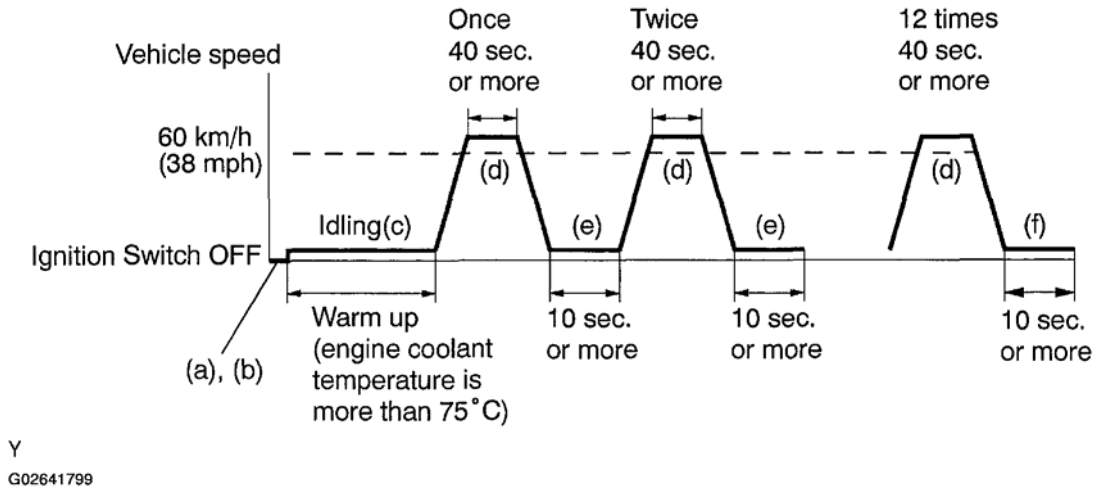

Fig. 102: Confirmation Driving Pattern Graph
Courtesy of TOYOTA MOTOR SALES, U.S.A., INC.

a. Connect the hand-held tester to the DLC3.
b. Switch the hand-held tester from normal mode to check (test) mode (see **PRE-CHECK**).
c. Start the engine and warm it up until the engine coolant temperature becomes more than 75°C.
d. Drive the vehicle at 60 km/h (38 mph) or more for 40 seconds or more.
e. Let the engine idle for 10 seconds or more.
f. Perform steps (d) to (e) 12 times.

HINT:

If a malfunction exists, the CHK ENG will be illuminated on the multi-information display during step (f).

NOTE: **If the steps in this test are not followed exactly, detecting a malfunction will be difficult. If you do not have a hand-held tester, turn the ignition switch OFF after performing steps from (c) to (d), then perform steps from (c) to (f) again.**

INSPECTION PROCEDURE

HINT:

Hand-held tester only:

It is possible the malfunctioning area can be found using the ACTIVE TEST A/F CONTROL operation. The A/F CONTROL operation can determine if the A/F sensor, heated oxygen sensor or other potential trouble areas are malfunctioning or not.

a. Perform the ACTIVE TEST / A/F CONTROL operation.

cardiagn.com

HINT:

The A/F CONTROL operation lowers the injection volume 12.5% or increases the injection volume 25%.

1. Connect the hand-held tester to the DLC3 on the vehicle.
2. Turn the ignition switch ON.
3. Warm up the engine by running the engine at 2,500 RPM for approximately 90 seconds.
4. Enter the following menus: DIAGNOSIS / ENHANCED OBD II / ACTIVE TEST / A/F CONTROL.
5. Perform A/F CONTROL with the engine in an idle condition (press the right or left button).

Result:

A/F sensor reacts in accordance with increase and decrease of injection volume:

+25% --> Rich output: less than 3.0 V

-12.5% --> Lean output: more than 3.35 V

Heated oxygen sensor reacts in accordance with increase and decrease of injection volume:

+25% --> Rich output: more than 0.55 V

-12.5% --> Lean output: less than 0.4 V

NOTE: The A/F sensor output has a few seconds of delay and the heated oxygen sensor output has about 20 seconds of delay.

cardiagn.com

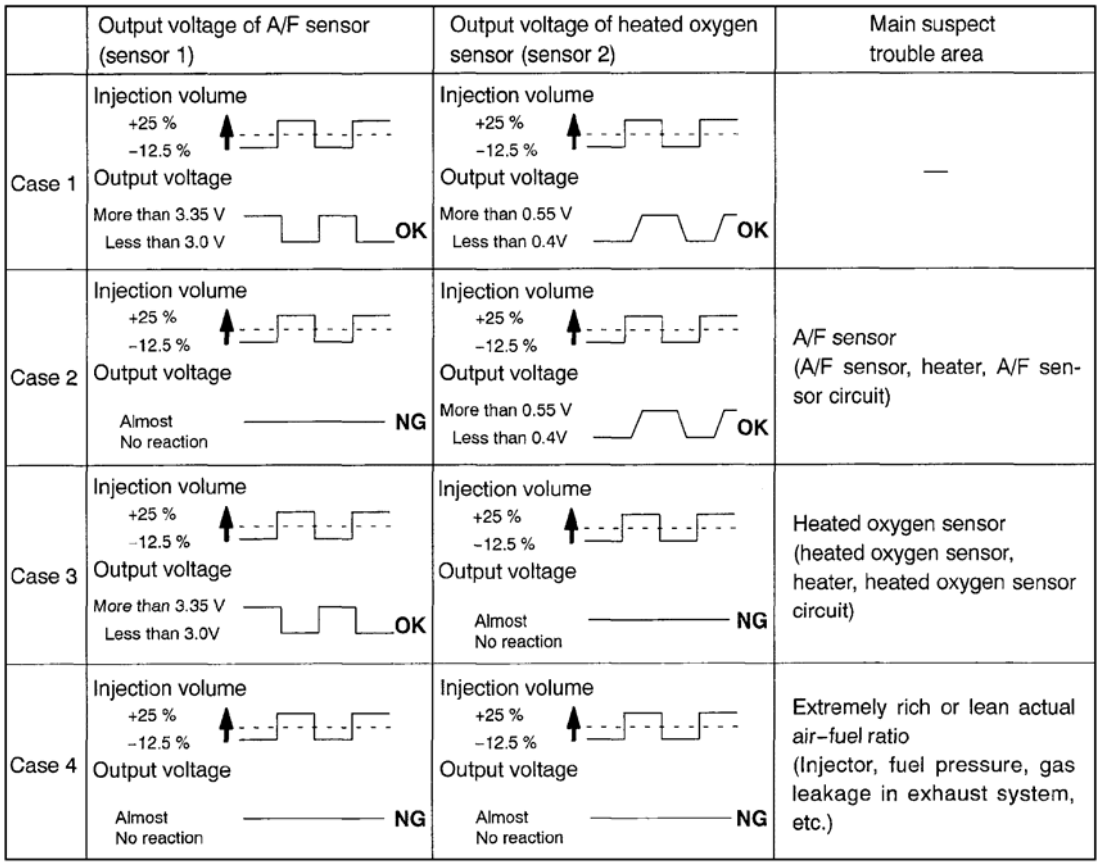

Fig. 103: A/F Sensor Output Voltage Graph (Sensor 1/Sensor 2)
Courtesy of TOYOTA MOTOR SALES, U.S.A., INC.

The following A/F CONTROL procedure enables a technician to check and graph the voltage outputs of both the A/F sensor and the heated oxygen sensor.

For displaying the graph, enter "ACTIVE TEST / A/F CONTROL / USER DATA", select "AFS B1S1 and O2S B1S2" by pressing "YES" and push "ENTER". Then, press "F4".

HINT:

Read freeze frame data using the hand-held tester or the OBD II scan tool. Freeze frame data records the engine conditions when a malfunction is detected. When troubleshooting, freeze frame data can help determine if the vehicle was running or stopped, if the engine was warmed up or not, if the air-fuel ratio was lean or rich, and other data from the time the malfunction occurred.

1. **Are there any other codes (besides DTC P0136) being output?**

   HINT:

cardiagn.com

If any other codes besides P0136 is output, perform the troubleshooting for those DTCs first.

YES: Go to relevant DTC chart (see DIAGNOSTIC TROUBLE CODE CHART).
NO: Go To Next Step.

2. **Check output voltage of heated oxygen sensor.**

PREPARATION:

a. Connect the hand-held tester or OBD II scan tool to the DLC3.
b. After warm up the engine, race the engine at 2,500 RPM for 3 minutes.

CHECK:

Read the output voltage of the heated oxygen sensor when the engine is suddenly raced.

HINT:

Quickly accelerate the engine to 4,000 RPM 3 times by using the accelerator pedal.

OK:

Heated oxygen sensor output voltage: Alternates from 0.4 V or less to 0.5 V or more.

OK: Go to step 6.
NG: Go To Next Step.

3. **Check heated oxygen sensor (heater resistance) (see INSPECTION).**
NG: Replace heated oxygen sensor.
OK: Go To Next Step.

4. **Check EFI main relay.**

PREPARATION:

Remove the EFI main relay from the engine room J/B.

CHECK:

Inspect the EFI main relay.

OK:

EFI MAIN RELAY TERMINALS RESISTANCE

Tester Connection	Specified Condition
3-5	10 kohm or higher
3-5	Below 1 ohm (when battery voltage is applied to

cardiagn.com

	terminals 1 and 2)

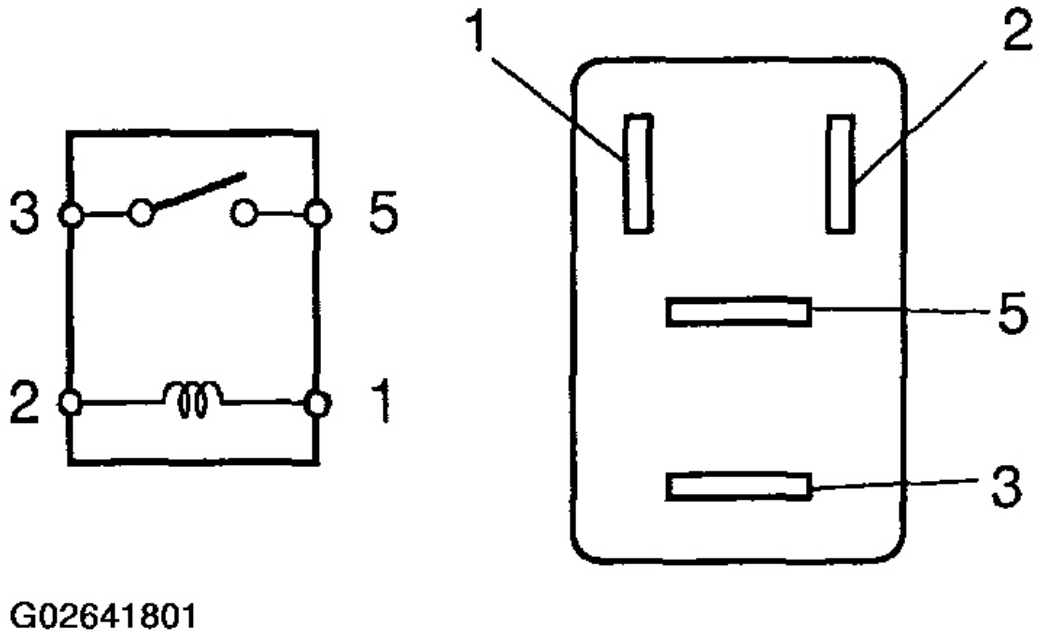

Fig. 104: Identifying EFI Main Relay Terminals
Courtesy of TOYOTA MOTOR SALES, U.S.A., INC.

NG: Replace EFI main relay.

OK: Go To Next Step.

5. **Check for open and short in wire harness between ECM and heated oxygen sensor (see HOW TO USE THE DIAGNOSTIC CHART AND INSPECTION PROCEDURE).**

Reference: Bank 1 Sensor 2 System Drawing

cardiagn.com

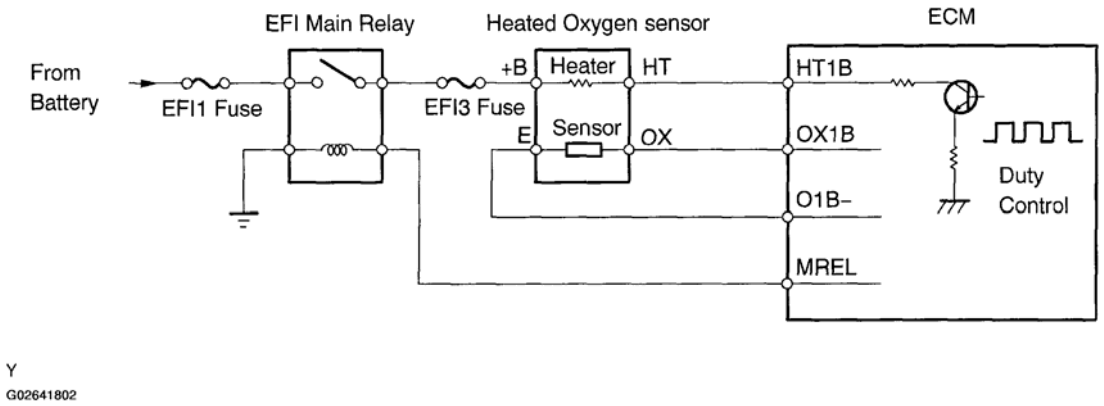

Fig. 105: Circuit Diagram - Heated Oxygen Sensor (Bank 1 Sensor 2)
Courtesy of TOYOTA MOTOR SALES, U.S.A., INC.

NG: Repair or replace harness and connector.

OK: Replace heated oxygen sensor.

6. **Perform confirmation driving pattern.**

   HINT:

   Clear all DTCs prior to perform the confirmation driving pattern.

   GO: To Next step.

7. **Is there DTC P0136 being output again?**

   NO: Check for intermittent problems.

   YES: Replace heated oxygen sensor.

DTC P0171, P0172: SYSTEM TOO LEAN/RICH (BANK 1)

CIRCUIT DESCRIPTION

The fuel trim is related to the feedback compensation value, not to the basic injection time. The fuel trim includes the short-term fuel trim and the long-term fuel trim.

The short-term fuel trim is the short-term fuel compensation used to maintain the ideal stoichiometric air-fuel ratio. The signal from the A/F sensor indicates whether the air-fuel ratio is RICH or LEAN compared to the stoichiometric air-fuel ratio. This variance triggers a reduction in the fuel volume if the air-fuel ratio is RICH, and an increase in the fuel volume if it is LEAN.

The short-term fuel trim varies from the central value due to individual engine differences, wear over time and changes in the operating environment. The long-term fuel trim is the overall fuel compensation for the short-term fuel trim variation from the central value.

cardiagn.com

If both the short-term fuel trim and the long-term fuel trim are LEAN or RICH beyond a certain value, it is detected as a malfunction, the MIL is illuminated and a DTC is set.

DTC No.	DTC Detection Condition	Trouble Area
P0171	When air–fuel ratio feedback is stable after warming up engine, fuel trim is considerably in error on LEAN side (2 trip detection logic)	• Air induction system • Injector blockage • MAF meter • ECT sensor • Fuel pressure • Gas leakage in exhaust system • Open or short in A/F sensor circuit (bank 1 sensor 1) • A/F sensor (bank 1 sensor 1) • A/F sensor heater (bank 1 sensor 1) • EFI main relay • A/F sensor heater and EFI main relay circuit • PCV hose connection • PCV hose
P0172	When air–fuel ratio feedback is stable after warming up engine, the fuel trim is considerably in error on RICH side (2 trip detection logic)	• Injector leak, blockage • MAF meter • ECT sensor • Ignition system • Fuel pressure • Gas leakage in exhaust system • Open or short in A/F sensor circuit (bank 1 sensor 1) • A/F sensor (bank 1 sensor 1) • A/F sensor heater (bank 1 sensor 1) • A/F sensor heater and EFI main relay circuit • EFI main relay

G02641803

Fig. 106: DTC P0171 & P0172 - DTC Detection Condition Chart
Courtesy of TOYOTA MOTOR SALES, U.S.A., INC.

HINT:

- When DTC P0171 is recorded, the actual air-fuel ratio is on the LEAN side. When DTC P0172 is recorded, the actual air-fuel ratio is on the RICH side.
- If the vehicle runs out of fuel, the air-fuel ratio is LEAN and DTC P0171 is recorded. The MIL then illuminates.

MONITOR DESCRIPTION

cardiagn.com

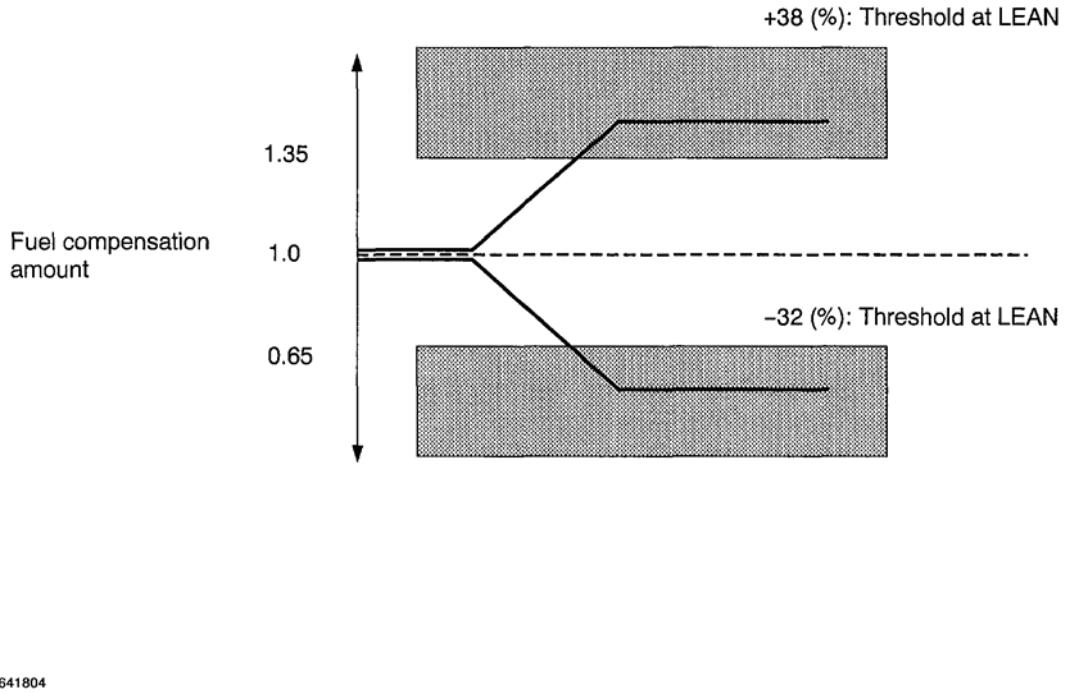

Fig. 107: Air-Fuel Ratio Vs. Fuel Compensation Amount Graph
Courtesy of TOYOTA MOTOR SALES, U.S.A., INC.

Under closed-loop fuel control, fuel injection amounts that deviate from the ECM's estimated fuel amount will cause a change in the long-term fuel trim compensation value. This long-term fuel trim is adjusted when there are persistent deviations in the short-term fuel trim values. And, the deviation from the simulated fuel injection amount by the ECM affects the smoothed fuel trim learning value. The smoothed fuel trim learning value is the combination of smoothed short-term fuel trim (fuel feedback compensation value) and smoothed long-term fuel trim (learning value of the air-fuel ratio). When the smoothed fuel trim learning value exceeds the DTC threshold, the ECM interprets this as a fault in the fuel system and sets a DTC.

Example:

The smoothed fuel trim leaning value is more than +38 % or less than -32 %. The ECM interprets this as a fault in the fuel system.

MONITOR STRATEGY

MONITOR STRATEGY

Related DTCs	P0171: Fuel trim lean P0172: Fuel trim rich
Required sensors / components (Main)	Fuel system
Required sensors / components (Related)	A/F sensor, MAF meter, CKP sensor
Frequency of operation	Continuous
Duration	10 sec.

cardiagn.com

MIL operation	2 driving cycles
Sequence of operation	None

TYPICAL ENABLING CONDITIONS

TYPICAL ENABLING CONDITIONS

The monitor will run whenever the following DTCs are not present	See **PRE-CHECK**
Battery voltage	11 V or more
Fuel system	Closed Loop (for 13 sec. or more)
Warm-up condition to enable air fuel ratio learning control	The conditions are met
Either of the following conditions is met:	
Engine RPM	Less than 1,100 rpm
Intake air amount per revolution	0.22 g/rev or more

TYPICAL MALFUNCTION THRESHOLDS

Fuel Trim Lean:

TYPICAL MALFUNCTION THRESHOLDS (FUEL TRIM LEAN)

Smoothed fuel trim learning value	38 %* or more at ECT: 80°C (176°F)

Fuel Trim Rich:

TYPICAL MALFUNCTION THRESHOLDS (FUEL TRIM RICH)

Smoothed fuel trim learning value	-32 %* or more at ECT: 80°C (176°F)

* The threshold value varies with the ECT.

WIRING DIAGRAM

See wiring diagram under **DTC P2195, P2196: OXYGEN (A/F) SENSOR SIGNAL STUCK LEAN (BANK 1 SENSOR 1) & OXYGEN (A/F) SENSOR SIGNAL STUCK RICH (BANK 1 SENSOR 1)**.

INSPECTION PROCEDURE

HINT:

Hand-held tester only:

It is possible the malfunctioning area can be found using the ACTIVE TEST A/F CONTROL operation. The A/F CONTROL operation can determine if the A/F sensor, heated oxygen sensor or other potential trouble areas are malfunctioning or not.

a. Perform the ACTIVE TEST A/F CONTROL operation.

cardiagn.com

HINT:

The A/F CONTROL operation lowers the injection volume 12.5 % or increases the injection volume 25%.

1. Connect the hand-held tester to the DLC3 on the vehicle.
2. Turn the ignition switch ON.
3. Warm up the engine by running the engine at 2,500 RPM for approximately 90 seconds.
4. Enter the following menus: DIAGNOSIS / ENHANCED OBD II/ ACTIVE TEST / A/F CONTROL.
5. Perform "A/F CONTROL" with the engine in an idle condition (press the right or left button).

Result:

A/F sensor reacts in accordance with increase and decrease of injection volume:

+25 % --> Rich output: Less than 3.0 V

-12.5 % --> Lean output: More than 3.35 V

Heated oxygen sensor reacts in accordance with increase and decrease of injection volume:

+25 % --> Rich output: More than 0.55 V

-12.5 % --> Lean output: Less than 0.4 V

NOTE: **The A/F sensor output has a few seconds of delay and the heated oxygen sensor output has about 20 seconds of delay at maximum.**

cardiagn.com

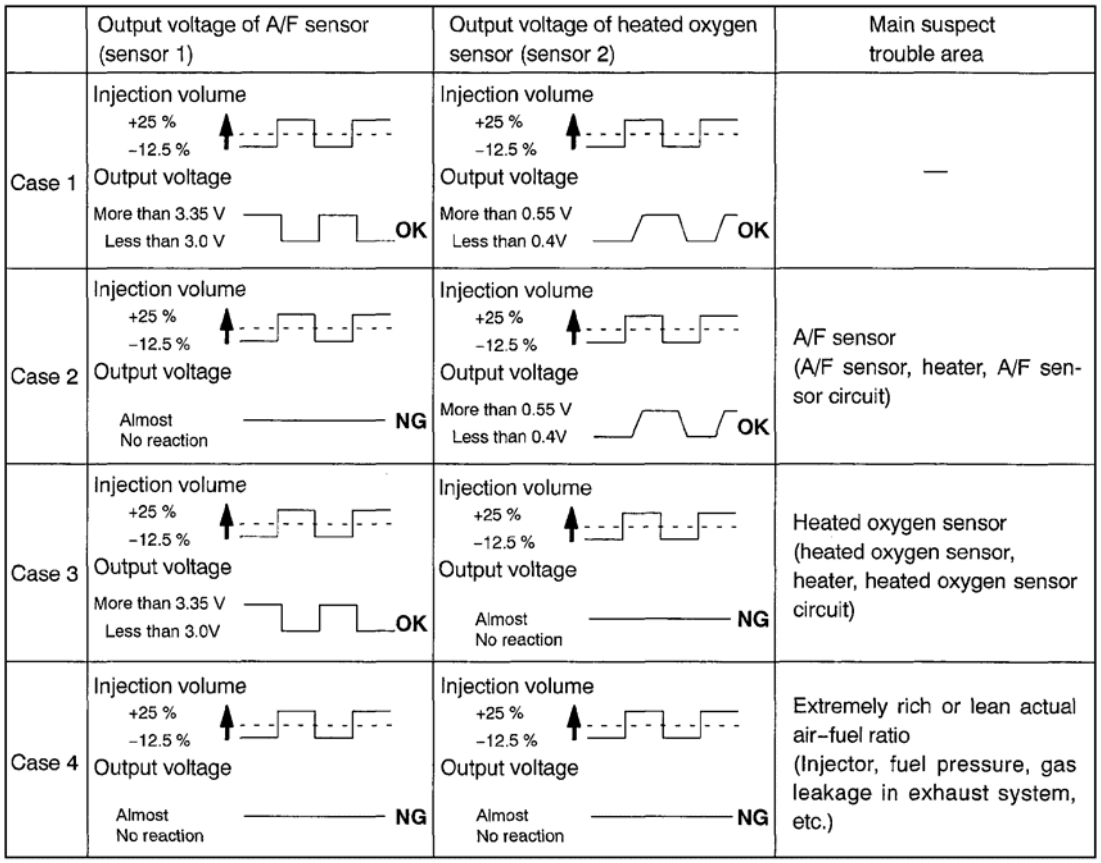

Fig. 108: A/F Sensor Output Voltage Graph (Sensor 1/Sensor 2)
Courtesy of TOYOTA MOTOR SALES, U.S.A., INC.

The following A/F CONTROL procedure enables a technician to check and graph the voltage outputs of both the A/F sensor and the heated oxygen sensor.

For displaying the graph, enter "ACTIVE TEST / A/F CONTROL / USER DATA", select "AFS B1S1 and O2S B1S2" by pressing "YES" and push "ENTER". Then, press "F4".

HINT:

- Read freeze frame data using the hand-held tester or the OBD II scan tool. Freeze frame data records the engine conditions when a malfunction is detected. When troubleshooting, freeze frame data can help determine if the vehicle was running or stopped, if the engine was warmed up or not, if the air-fuel ratio was lean or rich, and other data from the time the malfunction occurred.
- A high A/F sensor voltage could be caused by a rich air fuel mixture. Check the conditions that might cause the engine to run with a rich air fuel mixture.
- A low A/F sensor voltage could be caused by a lean air fuel mixture. Check the conditions that might cause the engine to run with a lean air fuel mixture.

cardiagn.com

1. **Check air induction system (see SFI SYSTEM).**

   CHECK:

   Check for vacuum leaks in the air induction system.

   NG: Repair or replace air induction system.
   OK: Go To Next Step.
2. **Check connection of PCV hose.**
   NG: Repair or replace PCV hose.
   OK: Go To Next Step.
3. **Check injector injection (Injection and volume) (see INSPECTION).**
   NG: Replace injector.
   OK: Go To Next Step.
4. **Check MAF meter (see INSPECTION) and ECT sensor (see INSPECTION).**
   NG: Repair or replace.
   OK: Go To Next Step.
5. **Check for sparks and ignition (see IGNITION SYSTEM).**
   NG: Repair or replace.
   OK: Go To Next Step.
6. **Check fuel pressure (see FUEL PUMP).**

   CHECK:

   Check the fuel pressure (high or low pressure).

   NG: Check and repair fuel pump, pressure regulator, fuel pipe line and filter.
   OK: Go To Next Step.
7. **Check gas leaks in exhaust system.**
   NG: Repair or replace
   OK: Go To Next Step.
8. **Connect hand-held tester or OBD II scan tool and read value for voltage output of A/F sensor.**

   PREPARATION:

   a. Connect the hand-held tester or OBD II scan tool to the DLC 3.
   b. Warm up the A/F sensor with the engine at 2,500 RPM for approximately 90 seconds.
   c. Read A/F sensor voltage on the hand-held tester or OBD II scan tool.

   CHECK:

cardiagn.com

a. Hand-held tester only:

   On the hand-held tester, enter the following menus: DIAGNOSIS / ENHANCED OBD II / SNAPSHOT / MANUAL SNAPSHOT/USER DATA. Read the values.

b. Select "AFS B1 S1/ENGINE SPD" and press button "YES".
c. Monitor the A/F sensor voltage carefully.
d. Check the A/F sensor voltage under the condition as follows.
   1. Allow the engine to idle for 30 seconds.
   2. Engine is racing at approx. 2,500 RPM (when engine revolution is not suddenly changed).
   3. Raise the engine speed to 4,000 RPM and release the accelerator pedal fully closed quickly.

OK:

Standard:

Conditions (1) and (2)

Voltage changes a little in the vicinity of 3.3 V (0.66 V)* (between approximately 3.1 to 3.5 V) as shown.

Condition (3)

A/F sensor voltage increase to 3.8 V (0.76 V)* or more during engine deceleration (when fuel cut) as shown.

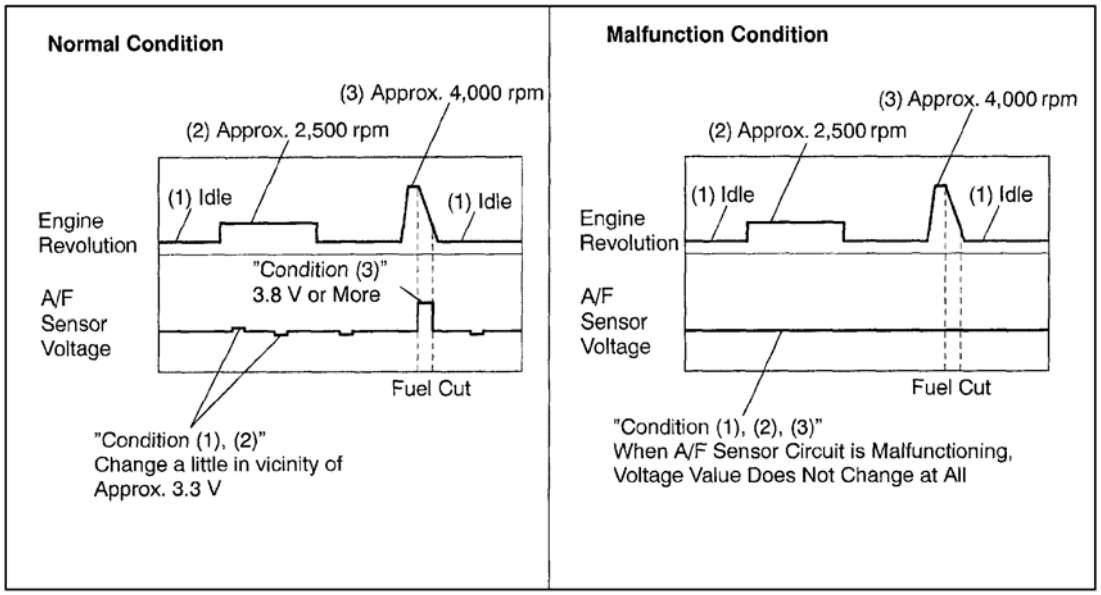

G02641806

cardiagn.com

Fig. 109: Engine Revolution & A/F Sensor Voltage Graph (Normal/Malfunction Condition)
Courtesy of TOYOTA MOTOR SALES, U.S.A., INC.

HINT:

- Whenever the output voltage of the A/F sensor remains at approximately 3.3 V (0.660 V)* (see dwg. 2) under any conditions as well as the above conditions, the A/F sensor may have an open-circuit. (This will happen also when the A/F sensor heater has an open-circuit.)
- Whenever the output voltage of the A/F sensor remains at a certain value of approximately 3.8 V (0.76 V)* or more, or 2.8 V (0.56 V)* or less (see dwg. 2) under any conditions as well as the above conditions, the A/F sensor may have a short-circuit.
- The ECM will stop fuel injection (fuel cut) during engine deceleration. This will cause a lean condition and should result in a momentary increase in A/F ratio sensor voltage.
- The ECM must establish a closed throttle position learned value to perform fuel cut. If the battery terminal has been disconnected, the vehicle must be driven over 16 km/h (10 mph) to allow the ECM to relearn the closed throttle position.
- When the vehicle is driven:

  In the case that the output voltage of the A/F sensor is below 2.8 V (0.76 V)* during fuel enrichment (for example, when the vehicle tries to overtake another vehicle on a highway, the vehicle speed is suddenly increased with the accelerator pedal fully depressed), the A/F sensor are functioning normally.

- The A/F sensor is a current output element, and therefore the current is converted into voltage inside the ECM. If measuring voltage at connectors of the A/F ratio sensor or ECM, you can obtain a constant voltage.

*: Voltage when using the OBD II scan tool.

OK: Go to step 16.

NG: Go To Next Step.

9. **Check A/F sensor heater (see INSPECTION).**

   NG: Replace A/F sensor.

   OK: Go To Next Step.

10. **Check EFI main relay.**

PREPARATION:

Remove the EFI main relay from the engine room J/B.

CHECK:

Inspect the EFI main relay.

OK:

cardiagn.com

EFI MAIN RELAY TERMINALS RESISTANCE

Tester Connection	Specified Condition
3-5	10 kohm or higher
3-5	Below 1 ohm (when battery voltage is applied to terminals 1 and 2)

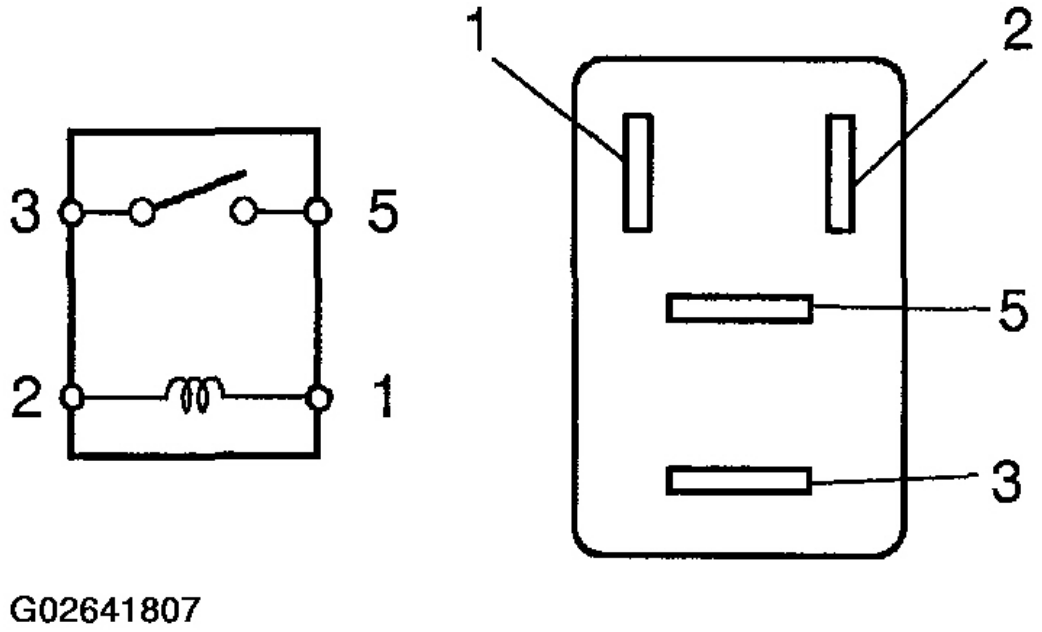

Fig. 110: identifying EFI Main Relay Terminals
Courtesy of TOYOTA MOTOR SALES, U.S.A., INC.

NG: Replace EFI main relay.

OK: Go To Next Step.

11. **Check for open and short in wire harness between ECM and A/F sensor (bank 1 sensor 1) (see HOW TO USE THE DIAGNOSTIC CHART AND INSPECTION PROCEDURE).**

Reference: Bank 1 Sensor 1 System Drawing

cardiagn.com

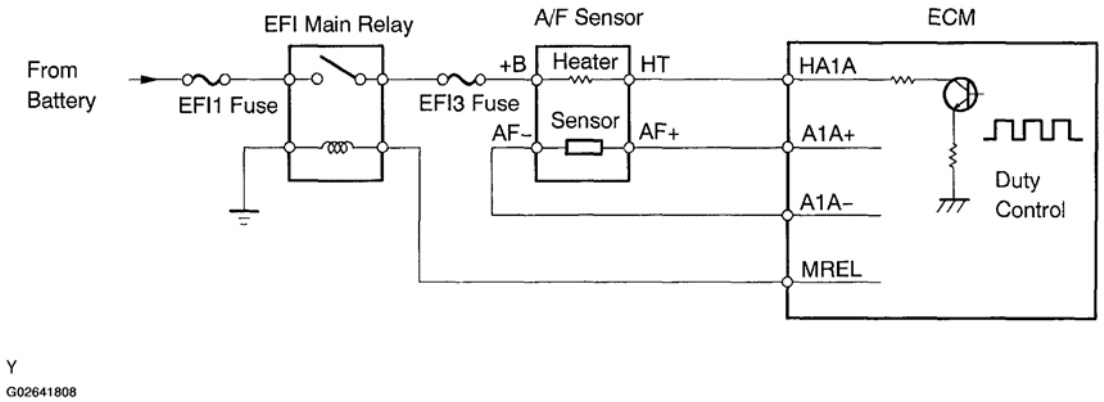

Fig. 111: A/F Sensor Circuit Diagram (Bank 1 Sensor 1)
Courtesy of TOYOTA MOTOR SALES, U.S.A., INC.

NG: Repair or replace harness and connector.

OK: Go To Next Step.

12. **Replace A/F sensor (see AIR-FUEL RATION (A/F) SENSOR).**

    GO: To Next step.

13. **Perform confirmation driving pattern (see DTC P2195, P2196: OXYGEN (A/F) SENSOR SIGNAL STUCK LEAN (BANK 1 SENSOR 1) & OXYGEN (A/F) SENSOR SIGNAL STUCK RICH (BANK 1 SENSOR 1)).**

    HINT:

    Clear all DTCs prior to performing the confirmation driving pattern.

    GO: To Next step.

14. **Are there DTCs P0171 and/or P0172 being output again?**

    YES: Replace ECM (see ENGINE CONTROL MODULE (ECM)) and perform confirmation driving pattern (see DTC P2195, P2196: OXYGEN (A/F) SENSOR SIGNAL STUCK LEAN (BANK 1 SENSOR 1) & OXYGEN (A/F) SENSOR SIGNAL STUCK RICH (BANK 1 SENSOR 1)).

    NO: Go To Next Step.

15. **Did vehicle run out of fuel in past?**

    NO: Check for intermittent problems (see PRE-CHECK).

    YES: DTC P0171 or P0172 is caused by running out of fuel.

16. **Perform confirmation driving pattern (see DTC P2195, P2196: OXYGEN (A/F) SENSOR SIGNAL STUCK LEAN (BANK 1 SENSOR 1) & OXYGEN (A/F) SENSOR SIGNAL STUCK RICH (BANK 1 SENSOR 1)).**

    HINT:

cardiagn.com

Clear all DTCs prior to performing the confirmation driving pattern (refer to step 13).

GO: To Next step.

17. **Are there DTCs P0171 and/or P0172 being output again?**

    NO: Go to step 2.

    YES: Go To Next Step.

18. **Replace A/F sensor.**

    GO: To Next step.

19. **Perform confirmation driving pattern (see DTC P2195, P2196: OXYGEN (A/F) SENSOR SIGNAL STUCK LEAN (BANK 1 SENSOR 1) & OXYGEN (A/F) SENSOR SIGNAL STUCK RICH (BANK 1 SENSOR 1)).**

    HINT:

    Clear all DTCs prior to performing the confirmation driving pattern (refer to step 13).

    GO: To Next step.

20. **Are there DTCs P0171 and/or P0172 being output again?**

    YES: Replace ECM (see ENGINE CONTROL MODULE (ECM)) and perform confirmation driving pattern (see DTC P2195, P2196: OXYGEN (A/F) SENSOR SIGNAL STUCK LEAN (BANK 1 SENSOR 1) & OXYGEN (A/F) SENSOR SIGNAL STUCK RICH (BANK 1 SENSOR 1)).

    NO: Go To Next Step.

21. **Did vehicle run out of fuel in past?**

    NO: Check for intermittent problems (see PRE-CHECK).

    YES: DTC P0171 or P0172 is caused by running out of fuel.

DTC P0300, P0301, P0302, P0303, P0304: RANDOM/MULTIPLE CYLINDER MISFIRE DETECTED & CYLINDER 1-4 MISFIRE DETECTED

CIRCUIT DESCRIPTION

When a misfire occurs in the engine, hydrocarbons (HC) enter the exhaust in high concentrations. If this HC concentration is high enough, there could be an increase in exhaust emissions levels. High concentrations of HC can also cause the temperature of the catalyst to increase, possibly damaging the catalyst. To prevent increases in emissions and limit the possibility of thermal damage, the ECM monitors the misfire rate. When the temperature of the catalyst reaches a point of thermal degradation, the ECM will blink the MIL. For monitoring a misfire, the ECM uses both the camshaft position sensor and the crankshaft position sensor. The camshaft position sensor is used to identify misfiring cylinders and the crankshaft position sensor is used to measure variations in the crankshaft rotation speed. The misfire is counted when crankshaft rotation speed variations exceed threshold values.

If the misfiring rate exceeds the threshold value and could cause emissions deterioration, the ECM illuminates the MIL.

cardiagn.com

DTC No.	DTC Detection Condition	Trouble Area
P0300	Misfiring of random cylinders is detected	• Open or short in engine wire • Connector connection • Vacuum hose connection • Ignition system • Injector • Fuel pressure • MAF meter • ECT sensor • Compression pressure • Valve clearance • Valve timing • PCV hose connection • PCV hose • ECM
P0301 P0302 P0303 P0304	Misfiring of each cylinder is detected	

G02641809

Fig. 112: DTC P0300, P0301, P0302, P0303 & P0304 - DTC Detection Condition Chart
Courtesy of TOYOTA MOTOR SALES, U.S.A., INC.

HINT:

When codes for a misfiring cylinder are recorded repeatedly but no random misfire code is recorded, it indicates that the misfires have been detected and recorded at different times.

Reference: Inspection using an oscilloscope.

With the engine idling, check the waveform between terminals #10 to #40 and E01 of the ECM connectors.

MONITOR DESCRIPTION

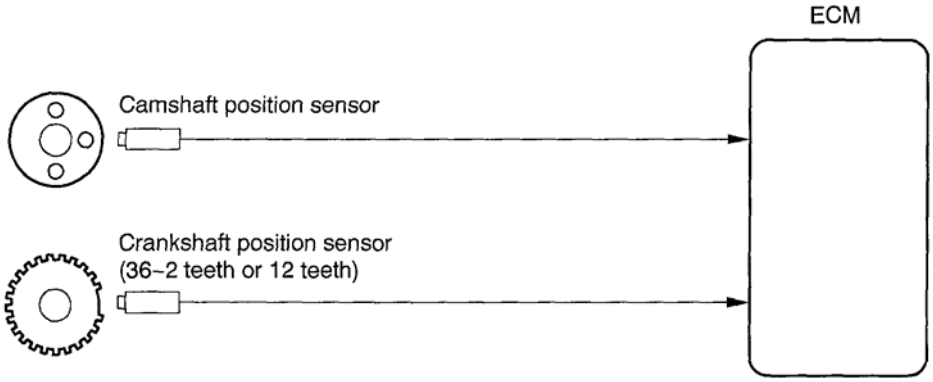

Y
G02641810

Fig. 113: Camshaft & Crankshaft Position Sensor Communication With ECM
Courtesy of TOYOTA MOTOR SALES, U.S.A., INC.

The ECM illuminates the MIL (2 trip detection logic) if:

cardiagn.com

- The misfiring rate exceeds a threshold value and could cause emissions deterioration.
- During the first 1,000 engine revolutions after the engine starts, an excessive misfire rate (approximately 20 to 50 misfire per 1,000 engine revolutions) occurs once.
- After the first 1,000 engine revolutions after the engine starts, an excessive misfire rate (approximately 20 to 50 misfire per 1,000 engine revolutions) occurs 4 times.

The ECM blinks the MIL (MIL blinks immediately) if:

- Within 200 engine revolutions at a high RPM, the threshold for "percent of misfire causing catalyst damage" is reached once.
- Within 200 engine revolutions at a normal RPM, the threshold for "percent of misfire causing catalyst damage" is reached 3 times (for the 2nd trip, reaching the threshold once will cause the MIL to flash).

MONITOR STRATEGY

MONITOR STRATEGY

Related DTCs	P0300: Multiple cylinder misfire P0301: Cylinder 1 misfire P0302: Cylinder 2 misfire P0303: Cylinder 3 misfire P0304: Cylinder 4 misfire
Required sensors / components (Main)	Injector, Ignition coil, Spark plug
Required sensors / components (Related)	CKP, CMP, ECT, IAT and MAF meter
Frequency of operation	Continuous
Duration	1,000 revolutions x 4: Emission-related-misfire 200 revolutions x 3: Catalyst-damaged-misfire
MIL operation	2 driving cycles (MIL flashed immediately when Catalyst-damaged-misfire is detected at less than 3,000 rpm.)
Sequence of operation	None

TYPICAL ENABLING CONDITIONS

TYPICAL ENABLING CONDITIONS

The monitor will run whenever the following DTCs are not present	See **PRE-CHECK**
Battery voltage	8 V or more
VVT system	No active test by scan tool
Engine RPM	400 rpm to 6,200 rpm
ECT	-10°C (14°F) or more
Either of (a) or (b) is met	(a)IAT is -10°C (14°F) or more (b) ECT is 75°C (167°F) or more
MAF	Varies with ECT and RPM

cardiagn.com

TP	Not changing rapidly (when engine RPM is more than 3,000 rpm)

TYPICAL MALFUNCTION THRESHOLDS

P0301 to P0304:

TYPICAL MALFUNCTION THRESHOLDS (P0301 TO P0304)

Misfire count on each cylinder	6 or more per 1,000 revolutions

Emission-related-misfire:

TYPICAL MALFUNCTION THRESHOLDS (EMISSION-RELATED-MISFIRE)

Misfire rate when engine start at cold	1.5 % or more

Catalyst-damage-misfire (MIL flashes immediately):

TYPICAL MALFUNCTION THRESHOLDS (CATALYST-DAMAGE-MISFIRE (MIL FLASHES IMMEDIATELY))

Either of the following conditions is set:	
Misfire counts	101 or more* per 200 revolutions (at intake air amount: 0.4 g/rev and engine RPM: 1,600 rpm)
Misfire counts of paired cylinder	150 per 200 revolutions

*: The threshold value varies with the intake air amount and the engine RPM.

WIRING DIAGRAM

cardiagn.com

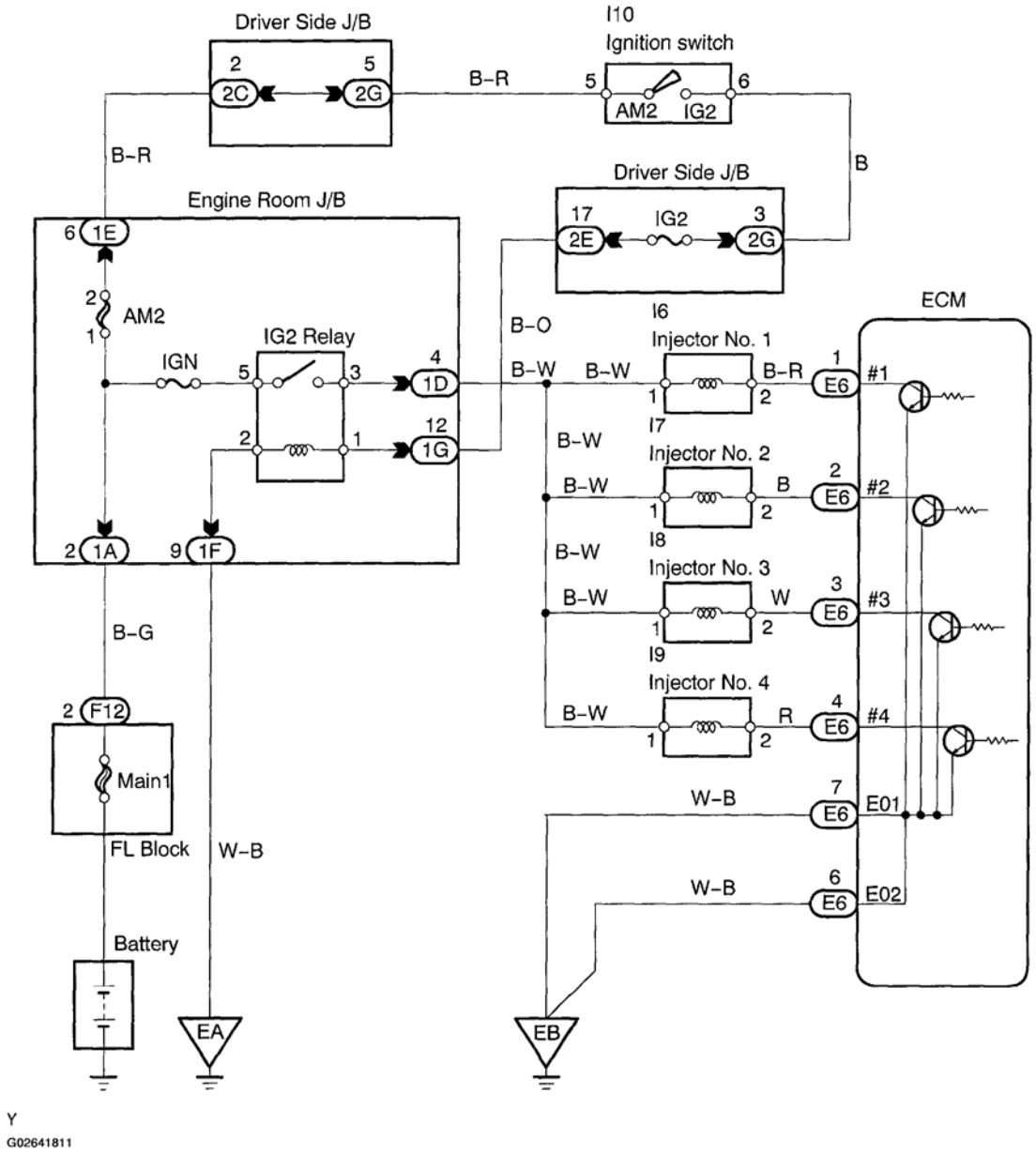

Fig. 114: Wiring Diagram - Multiple Cylinder Misfire Detected Circuit
Courtesy of TOYOTA MOTOR SALES, U.S.A., INC.

CONFIRMATION DRIVING PATTERN

a. Connect the hand-held tester to the DLC3.
b. Record the DTCs, freeze frame data and misfire counter data.
c. Use the hand-held tester to set the check mode (see **PRE-CHECK**).
d. Read the value on the misfire counter for each cylinder while idling the engine. If the value is displayed on the misfire counter, skip step (e).

cardiagn.com

e. Drive the vehicle several times with the engine speed, load and its surrounding range shown with ENGINE SPD, CALCLOAD in the freeze frame data or MISFIRE RPM, MISFIRE LOAD in the DATA LIST.

If you have no hand-held tester, turn the ignition switch OFF after the symptom is simulated once. Then repeat the simulation process again.

HINT:

In order to memorize the misfire DTC, it is necessary to drive with MISFIRE RPM, MISFIRE LOAD in the DATA LIST for the period of time in the chart below. Take care not to turn the ignition switch OFF. Turning the ignition switch OFF switches the diagnosis system from check mode to normal mode and all DTCs, freeze frame data and other data are erased.

ENGINE SPEED AND TIME DETAIL

Engine Speed	Time
Idling	3 minutes 30 seconds or more
1,000 rpm	3 minutes or more
2,000 rpm	1 minute 30 seconds or more
3,000 rpm	1 minute or more

f. Check if there is misfire or not by monitoring DTC and the freeze frame data. Record the data.

g. Turn the ignition switch OFF and wait for at least 5 seconds.

INSPECTION PROCEDURE

HINT:

- If DTCs besides misfire DTCs are memorized simultaneously, troubleshoot the non-misfire DTCs first.
- Read freeze frame data using the hand-held tester or the OBD II scan tool. Freeze frame data records the engine conditions when a malfunction is detected. When troubleshooting, freeze frame data can help determine if the vehicle was running or stopped, if the engine was warmed up or not, if the air-fuel ratio was lean or rich, and other data from the time the malfunction occurred.
- If the misfire does not occur when the vehicle is brought to the workshop, the misfire can be confirmed by reproducing the condition of the freeze frame data. Also, after finishing the repair, confirm that there is no misfire (see **CONFIRMATION DRIVING PATTERN**).
- On 6 and 8 cylinder engines, misfiring cylinder identification is disabled at high engine speed and only a general misfire fault code P0300 is stored instead of a cylinder specific misfire fault code (P0301 to P0308). If the misfire starts in a high engine speed area or the misfire occurs only in a high engine speed area, only code P0300 will be stored.
- Erase the general misfire fault code from the hand-held tester or OBD II scan tool.
- Start the engine and drive the confirmation pattern.
- Read the value of the misfire ratio for each cylinder. Or read the DTC.
- Perform repairs on the cylinder that has a high misfire ratio. Or repair the cylinder indicated by the DTC.

cardiagn.com

- After finishing repairs, drive the confirmation pattern again and confirm that no misfire occurs.
- When either of SHORT FT #1, LONG FT #1 in the freeze frame data is over the range of +/-20 %, there is a possibility that the air-fuel ratio is becoming to RICH (-20 % or less) or LEAN (+20 % or more).
- When COOLANT TEMP in the freeze frame data is less than 80°C (176°F), there is a possibility of misfire only during engine warm-up.
- If the misfire cannot be reproduced, the following reasons may apply: 1) the vehicle has low fuel, 2) improper fuel is being used, and 3) the ignition plug is contaminated.
- Be sure to check the value on the misfire counter after the repair.

1. **Are there any other codes (besides DTC P0300, P0301, P0302, P0303 or P0304) being output?**

   NG: Go to relevant DTC chart (see DIAGNOSTIC TROUBLE CODE CHART).

   OK: Go To Next Step.

2. **Check wire harness and vacuum hose in engine room.**

   CHECK:

   a. Check the connection conditions of the wire harness and connector.
   b. Check the piping of the vacuum hose.

   NG: Repair or replace, then confirm that there is no misfire (see CONFIRMATION DRIVING PATTERN).

   OK: Go To Next Step.

3. **Check connection of PCV piping.**

   NG: Repair or replace PCV piping.

   OK: Go To Next Step.

4. **Connect hand-held tester or OBD II scan tool and read number of misfire.**

   PREPARATION:

   a. Connect the hand-held tester or the OBD II scan tool to the DLC3.
   b. Turn ON the ignition switch and push the hand-held tester or the OBD II scan tool main switch ON.
   c. Start the engine.
   d. Enter the following menus: DIAGNOSIS / ENHANCED OBD II / DATA LIST / ALL / CYL#1 - CYL#4.

   CHECK:

   Read the number of misfire on the hand-held tester or the OBD II scan tool.

   HINT:

   When a misfire is not reproduced, be sure to branch below based on the stored DTC.

cardiagn.com

RESULT:

HIGH MISFIRE RATE RESULT

High Misfire Rate Cylinder	Proceed to
1 or 2 cylinders	Type I
More than 3 cylinders	Type II

Type II: Go to step 15.

Type I: Go To Next Step.

5. **Check spark plug and spark of misfiring cylinder.**

PREPARATION:

a. Disconnect the ignition coil.
b. Remove the spark plug.

CHECK:

a. Check the spark plug type.
b. Check the electrode for carbon deposits.
c. Check the electrode gap.

OK:

a. **Recommended spark plug:**

RECOMMENDED SPARK PLUG

DENSO made	SK20R11
NGK made	IFR6A11

b. **No large carbon deposit present.**

Not wet with gasoline or oil.

c. **Maximum electrode gap for used spark plug: 1.3 mm (0.051 in.)**

Correct electrode gap for new spark plug: 1.0 to 1.1 mm (0.039 to 0.043 in.)

PREPARATION:

a. Disconnect the ignition coil with igniter connector, and disconnect the ignition coil with igniter.
b. Remove the spark plug.
c. Install the spark plug to the ignition coil with igniter, and connect the ignition coil with igniter connector.

cardiagn.com

d. Disconnect the injector connector.
e. Ground the spark plug.

cardiagn.com

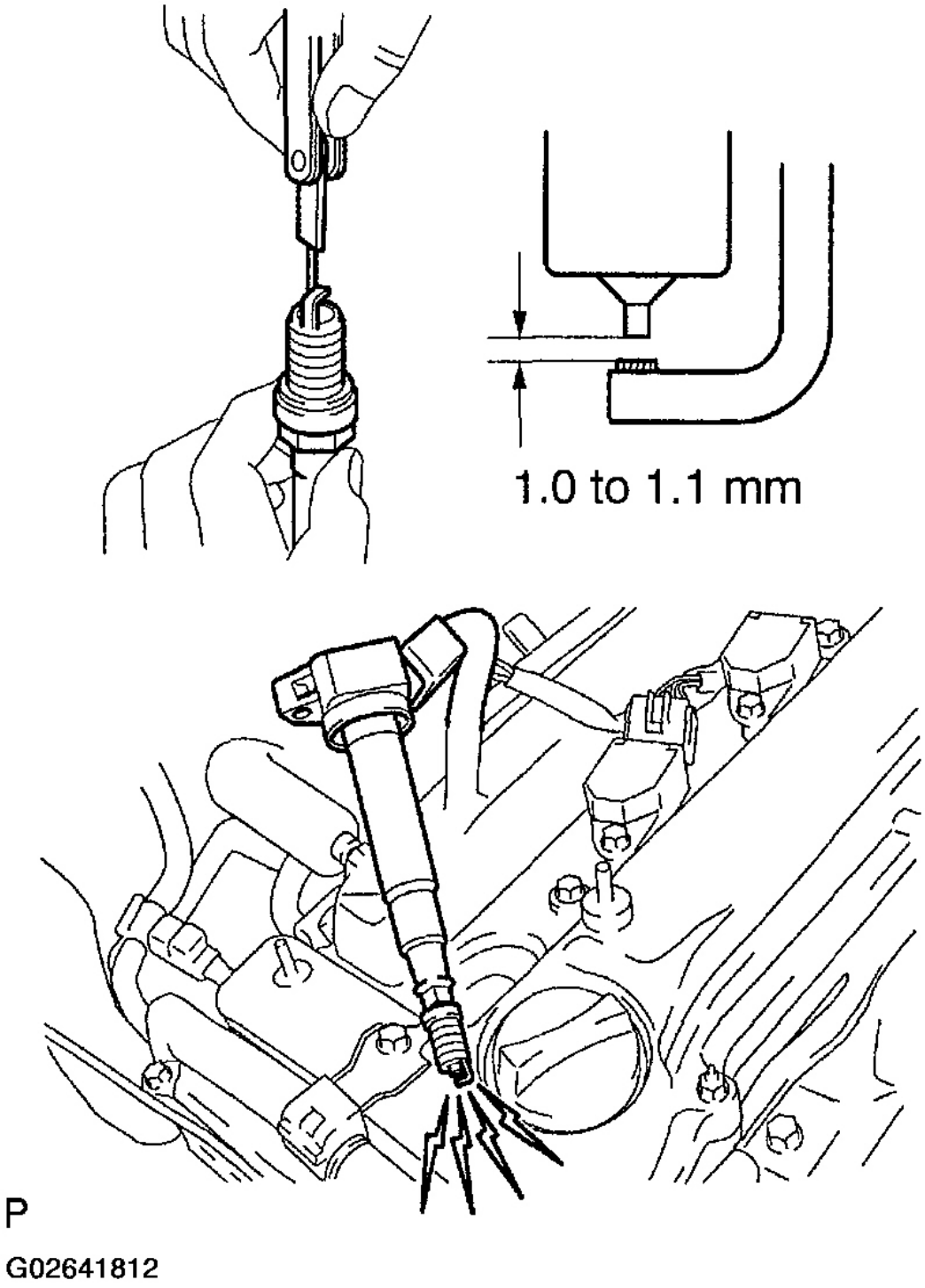

Fig. 115: Checking Spark Plug Gap & Checking For Spark

cardiagn.com

Courtesy of TOYOTA MOTOR SALES, U.S.A., INC.

CHECK:

Check if sparks occur while the engine is being cranked. (See **Fig. 115**)

NOTE: To prevent excess fuel from being injected from the injectors during this test, do not crank the engine for more than 2 seconds at a time.

OK:

Spark jumps across electrode gap.

OK: Go to step 8
NG: Go To Next Step.

6. **Change normal spark plug and check spark of misfiring cylinder.**

PREPARATION:

a. Disconnect the spark plug.
b. Change the normal spark plug
c. Install the spark plug to the ignition coil with igniter.
d. Disconnect the injector connector.
e. Ground the spark plug.

CHECK:

Check if spark occurs while the engine is being cranked.

NOTE: To prevent excess fuel from being injected from the injectors during this test, do not crank the engine for more than 2 seconds at a time.

OK:

Spark jumps across electrode gap.

OK: Replace spark plug.
NG: Go To Next Step.

7. **Change normal ignition coil with igniter and check spark of misfiring cylinder.**

PREPARATION:

a. Disconnect the ignition coil with igniter connector, and disconnect the ignition coil with igniter.
b. Remove the spark plug.

cardiagn.com

c. Change normal ignition coil with igniter.
d. Install the spark plug to the ignition coil with igniter, and connect the ignition coil with igniter connector.
e. Disconnect the injector connector.
f. Ground the spark plug.

CHECK:

Check if spark occurs while the engine is being cranked.

NOTE: To prevent excess fuel from being injected from the injectors during this test, do not crank the engine for more than 2 seconds at a time.

OK:

Spark jumps across electrode gap.

OK: Replace ignition coil with igniter, then confirm that there is no misfire.

NG: Go To Next Step.

8. **Check for open and short in wire harness between ignition coil and ECM of misfiring cylinder (see HOW TO USE THE DIAGNOSTIC CHART AND INSPECTION PROCEDURE).**

OK: Replace ignition coil with igniter.

NG: Repair or replace harness and connector.

9. **Check voltage of ECM terminal for injector of failed cylinder.**

PREPARATION:

a. Remove the glove compartment (see **ENGINE CONTROL MODULE (ECM)**).
b. Turn the ignition switch ON.

CHECK:

Measure the voltage between applicable terminal of the ECM connector and body ground.

OK:

Voltage: 9 to 14 V

cardiagn.com

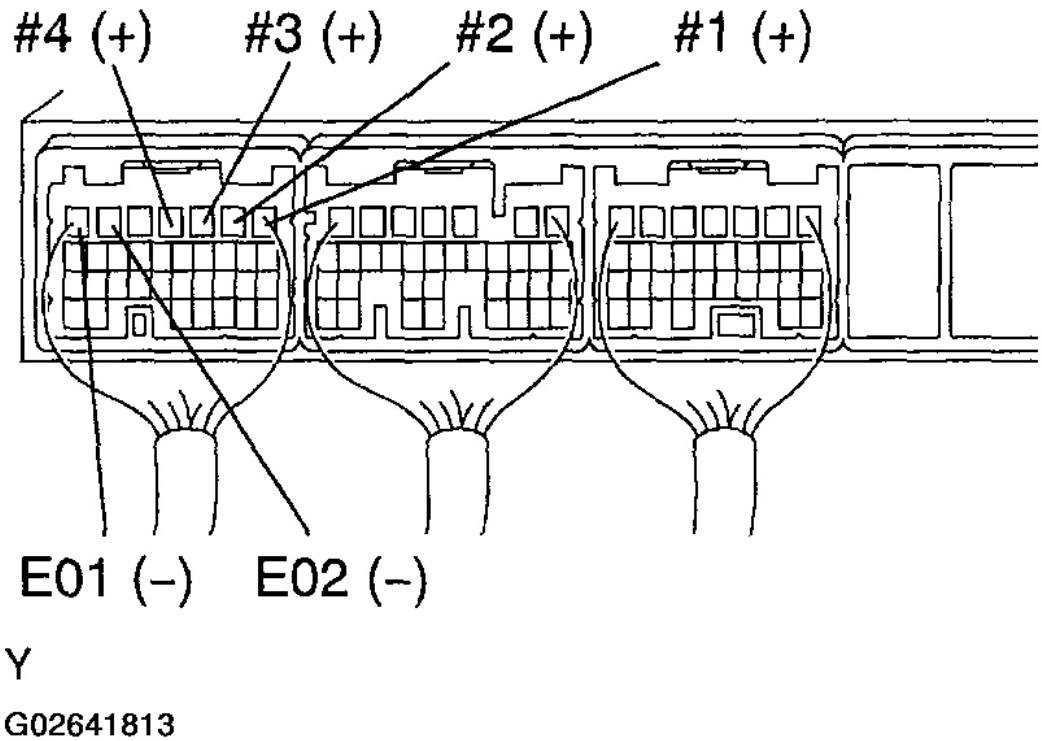

Fig. 116: Identifying Fuel Injectors & E01/E02 Terminals At ECM Connector
Courtesy of TOYOTA MOTOR SALES, U.S.A., INC.

Reference: INSPECTION USING OSCILLOSCOPE

With the engine idling, check the waveform between terminals #1 - #4 and E01/E02 of the ECM connector.

HINT:

The correct waveform is as shown.

cardiagn.com

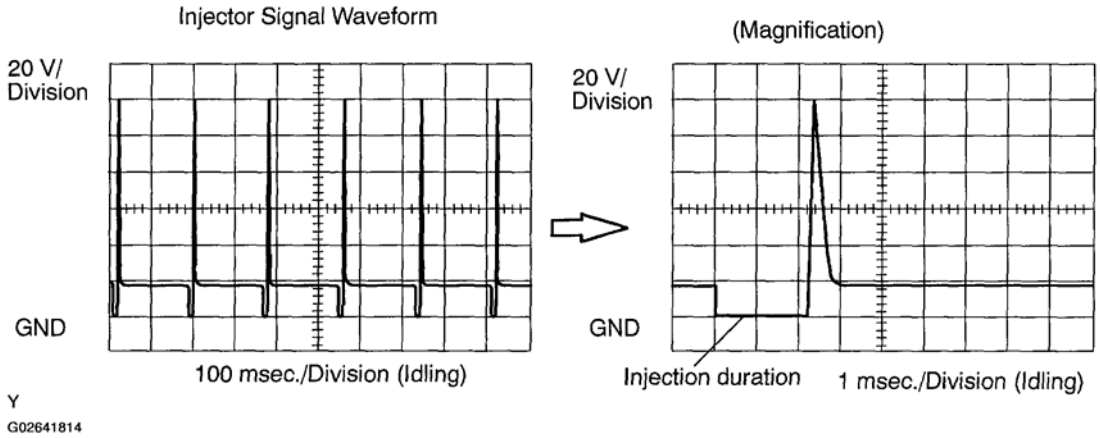

Fig. 117: Injector Signal Waveform Graph
Courtesy of TOYOTA MOTOR SALES, U.S.A., INC.

OK: Go to step 12.

NG: Go To Next Step.

10. **Check resistance of injector of misfiring cylinder (see INJECTOR).**

    NG: Replace injector.

    OK: Go To Next Step.

11. **Check for open and short in wire harness between ignition switch and injector, and injector and ECM of misfiring cylinder (see HOW TO USE THE DIAGNOSTIC CHART AND INSPECTION PROCEDURE).**

    NG: Repair or replace harness and connector.

    OK: Go To Next Step.

12. **Check injector injection and volume of misfiring cylinder (see INSPECTION).**

    NG: Replace injector.

    OK: Go To Next Step.

13. **Check compression pressure of misfiring cylinder (see COMPRESSION).**

    NG: Repair or replace.

    OK: Go To Next Step.

14. **Check valve clearance of misfiring cylinder (see VALVE CLEARANCE).**

    NG: Adjust valve clearance

    OK: Go To Next Step.

15. **Switch step by number of misfire cylinders (refer to result of step 4).**

    HINT:

    - If the result of step 4 is "1 or 2 cylinders", proceed to A.
    - If the result of step 4 is "more than 3 cylinders", proceed to B.

cardiagn.com

B: Check for intermittent problems (see PRE-CHECK).

A: Go To Next Step.

16. **Check valve timing (Check for loose and jumped tooth of timing chain) (see INSPECTION).**

    NG: Adjust valve timing (Replace timing chain).

    OK: Go To Next Step.

17. **Check fuel pressure (see FUEL PUMP).**

    NG: Check and repair fuel pump, pressure regulator, fuel pipe line and filter (see PRE-CHECK).

    OK: Go To Next Step.

18. **Read value of hand-held tester or OBD II scan tool (intake air temperature and mass air flow rate).**

PREPARATION:

a. Connect the hand-held tester or the OBD II scan tool to the DLC3.
b. Turn the ignition switch ON.

CHECK:

a. Check the intake air temperature.

   Enter the following menus: DIAGNOSIS / ENHANCED OBD II / DATA LIST / ALL / INTAKE AIR and read its value displayed on the hand-held tester or the OBD II scan tool.

   Temperature: Equivalent to ambient temperature

b. Check the mass air flow rate.

   Enter the following menus: DIAGNOSIS / ENHANCED OBD II / DATA LIST / ALL / MAF and read its value displayed on the hand-held tester or the OBD II scan tool.

OK:

CONDITION AND AIR FLOW RATE SPECIFICATION

Condition	Air Flow Rate (gm/s)
Ignition switch ON (do not start engine)	0
Idling	0.5 to 5
Running without load (2,500 rpm)	3 to 10
Idling to quickly accelerating	Air flow rate fluctuates

NG: Replace MAF meter.

OK: Go To Next Step.

19. **Check ECT sensor (see INSPECTION).**

cardiagn.com

NG: Replace ECT sensor.

OK: Switch step by number of misfire cylinders (refer result of step).

RESULT:

HIGH MISFIRE RATE CYLINDER DETAIL

High misfire rate cylinder	Proceed to
1 or 2 cylinders	A
more than 3 cylinders	

B: Go to step 5.

A: Check for intermittent problems (see PRE-CHECK).

DTC P0327, P0328: KNOCK SENSOR 1 CIRCUIT LOW/HIGH INPUT (BANK 1 OR SINGLE SENSOR)

CIRCUIT DESCRIPTION

A flat type knock sensor (non-resonant type) has the structure that can detect vibration in a wider band of frequency from approximately 6 kHz to 15 kHz and has the following features.

Knock sensor is fitted on the left side of the cylinder block to detect engine knocking.

Each sensor contains a piezoelectric element which generates a voltage when it becomes deformed. This occurs when the cylinder block vibrates due to knocking. If engine knocking occurs, the ignition timing is retarded to suppress it.

DTC No.	DTC Detection Condition	Trouble Area
P0327	Output voltage of knock sensor is 0.5 V or less	• Short in knock sensor circuit • Knock sensor • ECM
P0328	Output voltage of knock sensor is 4.5 V or more	• Open in knock sensor circuit • Knock sensor • ECM

G02641815

Fig. 118: DTC P0327 & P0328 - DTC Detection Condition Chart
Courtesy of TOYOTA MOTOR SALES, U.S.A., INC.

MONITOR DESCRIPTION

The knock sensor, located on the cylinder block, detects spark knock.

When spark knock occurs, the sensor pick-up vibrates in a specific frequency range. When the ECM detects voltage in this frequency range, it retards the ignition timing to suppress the spark knock,

The ECM also senses background engine noise with the knock sensor and uses this noise to check for faults in

cardiagn.com

the sensor. If the knock sensor signal level is too low for more than 10 seconds, or if the knock sensor output voltage is out of normal range, the ECM interprets this as a fault in the knock sensor and sets a DTC.

MONITOR STRATEGY

MONITOR STRATEGY

Related DTCs	P0327: Knock sensor range check (low voltage)
Related DTCs	P0328: Knock sensor range check (high voltage)
Required sensors / components (Main)	Knock sensor
Required sensors / components (Related)	MAF meter, CKP sensor, ECT sensor
Frequency of operation	Continuous
Duration	10 sec: Knock sensor rationality
Duration	1 sec: Knock sensor range check
MIL operation	Immediate
Sequence of operation	None

TYPICAL ENABLING CONDITIONS

TYPICAL ENABLING CONDITIONS

The monitor will run whenever the following DTCs are not preset	None

Knock Sensor Range Check:

TYPICAL ENABLING CONDITIONS (KNOCK SENSOR RANGE CHECK)

Battery voltage	10 V or more
Time after engine start	5 sec. or more

TYPICAL MALFUNCTION THRESHOLDS

Knock Sensor Range Check (Low voltage) (P0327):

TYPICAL MALFUNCTION THRESHOLDS (KNOCK SENSOR RANGE CHECK (LOW VOLTAGE) (P0327))

Knock sensor signal	Less than 0.5 V

Knock Sensor Range Check (High voltage) (P0328):

TYPICAL MALFUNCTION THRESHOLDS (KNOCK SENSOR RANGE CHECK (HIGH VOLTAGE) (P0328))

Knock sensor signal	More than 4.5 V

WIRING DIAGRAM

cardiagn.com

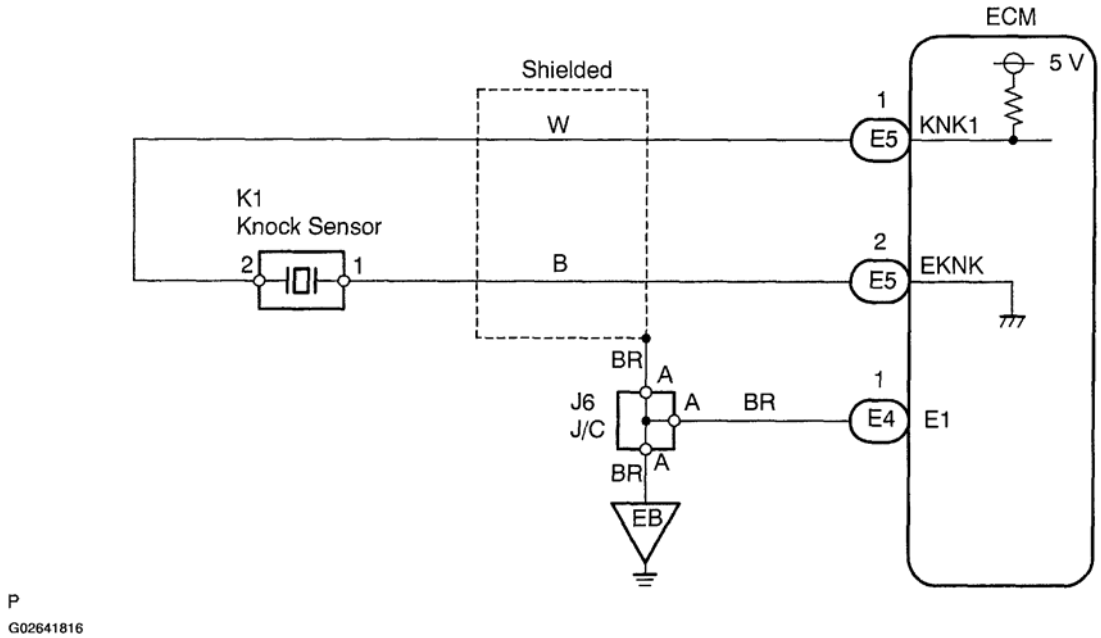

Fig. 119: Wiring Diagram - Knock Sensor Circuit
Courtesy of TOYOTA MOTOR SALES, U.S.A., INC.

INSPECTION PROCEDURE

HINT:

Read freeze frame data using the hand-held tester or the OBD II scan tool. Freeze frame data records the engine conditions when a malfunction is detected. When troubleshooting, freeze frame data can help determine if the vehicle was running or stopped, if the engine was warmed up or not, if the air-fuel ratio was lean or rich, and other data from the time the malfunction occurred.

1. **Check DTC.**

   PREPARATION:

   a. Connect the hand-held tester or the OBD II scan tool to the DLC3.
   b. Turn ON the ignition switch and push the hand-held tester or the OBD II scan tool main switch ON.
   c. Warm up the engine.
   d. Run the engine at 3,000 RPM for 10 seconds or more.
   e. Enter the following menus: DIAGNOSIS / ENHANCED OBD II / DTC INFO / CURRENT CODES.

   CHECK:

cardiagn.com

Read the DTC.

OK:

DTC OUTPUT

Display (DTC output)	Proceed to
P0327 and/or P0328 are output again	A
No DTCs are output again	B

B: Check for intermittent problems. (see PRE-CHECK)

A: Go To Next Step.

2. **Check for open and short in wire harness between ECM and knock sensor (see HOW TO USE THE DIAGNOSTIC CHART AND INSPECTION PROCEDURE).**

NG: Go to step 4.

OK: Go To Next Step.

3. **Check voltage between terminal KNK1 and EKNK of ECM connector.**

PREPARATION:

Turn the ignition switch ON.

CHECK:

Measure the voltage between terminals KNK1 and EKNK of the ECU connector.

OK:

Voltage: 4.5 to 5.5 V

cardiagn.com

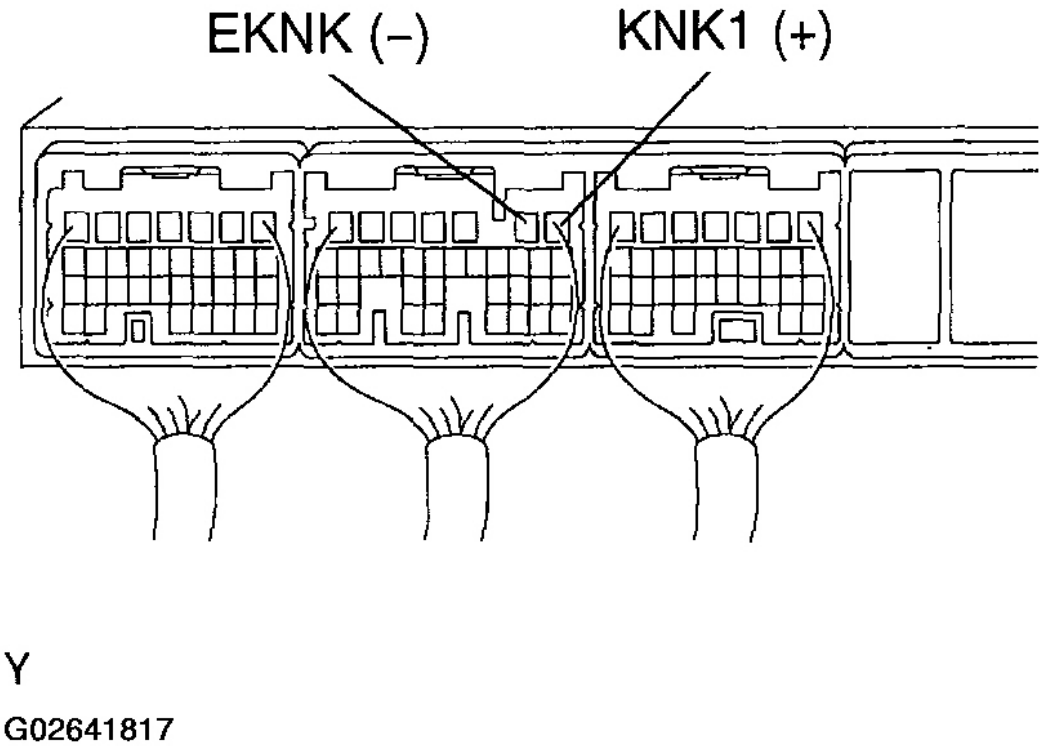

Fig. 120: Identifying Terminal KNK1 & EKNK Of ECM Connector
Courtesy of TOYOTA MOTOR SALES, U.S.A., INC.

Reference: INSPECTION USING OSCILLOSCOPE

HINT:

The correct waveform is as shown in the illustration.

ITEM AND CONTENTS

Item	Contents
Terminal	KNK1 - EKNK
Equipment Set	0.01 to 10 V/DIV. 0.01 to 10 msec./DIV.
Condition	After warming up the engine, keep engine speed 4,000 rpm

cardiagn.com

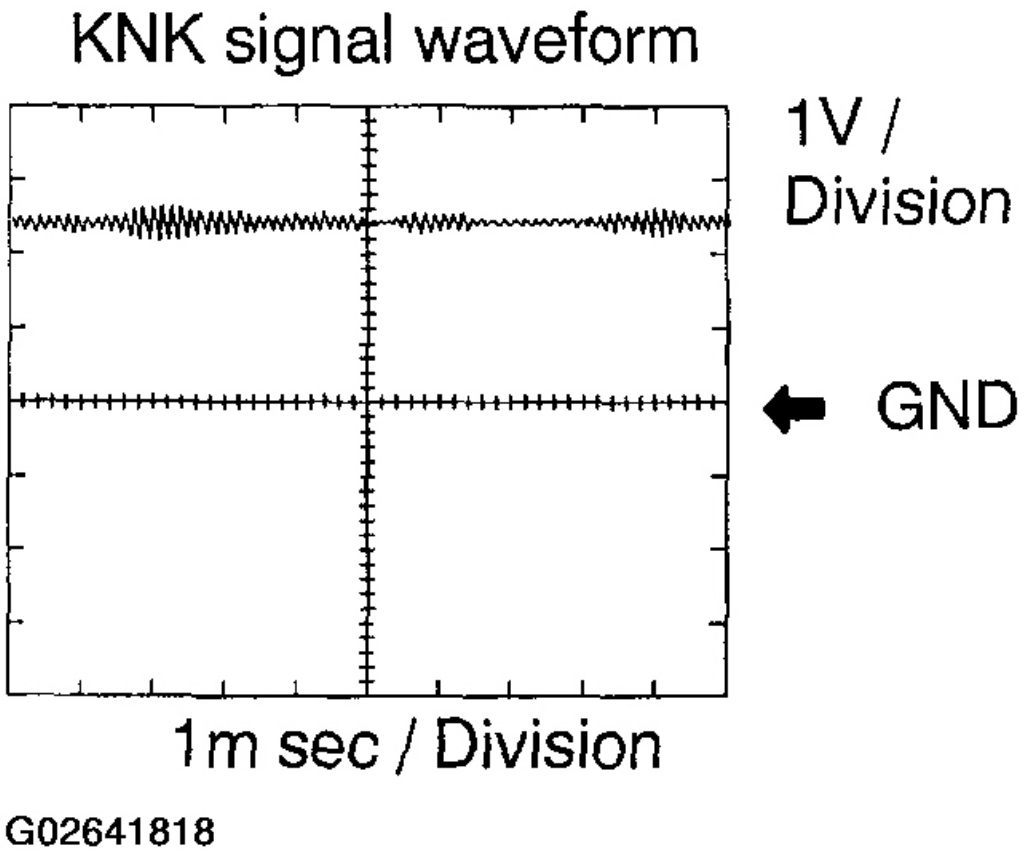

Fig. 121: KNK Signal Waveform Graph
Courtesy of TOYOTA MOTOR SALES, U.S.A., INC.

NG: Replace ECM (see ENGINE CONTROL MODULE (ECM)).

OK: Check for intermittent problems (see HOW TO USE THE DIAGNOSTIC CHART AND INSPECTION PROCEDURE).

NOTE: Fault may be intermittent. Check the harness and connectors carefully.

4. **Check knock sensor.**

PREPARATION:

Disconnect the sensor connector.

CHECK:

cardiagn.com

Check the resistance between terminals 1 and 2 of the sensor.

OK:

Resistance: 120 to 280 kohm

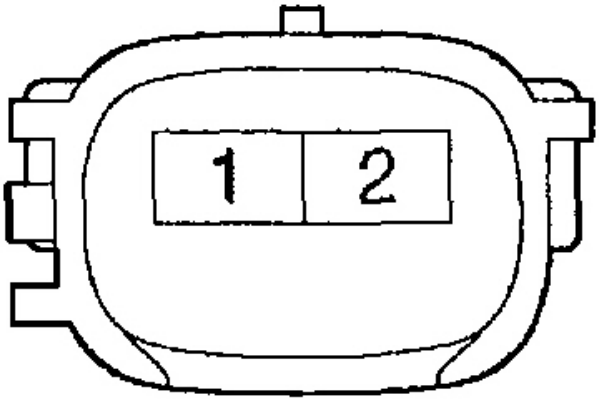

Y

G02641819

Fig. 122: Identifying Knock Sensor Connector Terminals
Courtesy of TOYOTA MOTOR SALES, U.S.A., INC.

NG: Replace knock sensor.

OK: Check and replace harness and connector.

DTC P0335, P0339: CRANKSHAFT POSITION SENSOR "A" CIRCUIT MALFUNCTION/INTERMITTENT

CIRCUIT DESCRIPTION

The crankshaft position sensor (CKP) system consists of a crankshaft position sensor plate and a pickup coil.

The sensor plate has 34 teeth and is installed on the crankshaft. The pickup coil is made of an iron core and magnet. The sensor plate rotates and as each tooth passes through the pickup coil, a pulse signal is created. The pickup coil generates 34 signals for each engine revolution. Based on these signals, the ECM calculates the

cardiagn.com

crankshaft position and engine RPM. Using these calculations, the fuel injection time and ignition timing are controlled.

DTC No.	DTC Detection Condition	Trouble Area
P0335	• No crankshaft position sensor signal to ECM during cranking (2 trip detection logic) • No crankshaft position sensor signal to ECM with engine speed 600 rpm or more (2 trip detection logic)	• Open or short in crankshaft position sensor circuit • Crankshaft position sensor • Signal plate (crankshaft position sensor plate) • ECM
P0339	No crankshaft position sensor signal to ECM is input for 0.05 seconds or more, and conditions (a), (b) and (c) are met: (a) Engine revolution 1,000 rpm or more (b) STA signal is OFF (c) 3 seconds or more have lapsed after STA signal is switched form ON to OFF	• Same as DTC No. P0335

G02641820

Fig. 123: DTC P0335 & P0339 - DTC Detection Condition Chart
Courtesy of TOYOTA MOTOR SALES, U.S.A., INC.

MONITOR DESCRIPTION

If there is no signal from the crankshaft sensor even though the engine is revolving, the ECM interprets this as a malfunction of the sensor.

MONITOR STRATEGY

DTC P0335

Related DTCs	P0335: CKP sensor range check during cranking P0335: CKP sensor range check during engine running
Required sensors / components (Main)	CKP sensor
Required sensors / components (Related)	–
Frequency of operation	Continuous
Duration	4.7 sec.: CKP sensor range check during cranking 0.5 sec.: CKP sensor range check during engine running
MIL operation	2 driving cycles
Sequence of operation	None

G02641821

Fig. 124: Monitor Strategy Chart (P0335)
Courtesy of TOYOTA MOTOR SALES, U.S.A., INC.

TYPICAL ENABLING CONDITIONS

DTC P0335

TYPICAL ENABLING CONDITIONS (P0335)

The monitor will run whenever the following DTCs are not present	None

cardiagn.com

CKP Sensor Range Check during Cracking:

TYPICAL ENABLING CONDITIONS (CKP SENSOR RANGE CHECK DURING CRACKING)

Starter	ON
Minimal battery voltage while starter ON	Less than11 V

CKP Sensor Range Check during Engine Running:

TYPICAL ENABLING CONDITIONS (CKP SENSOR RANGE CHECK DURING ENGINE RUNNING)

Engine RPM	600 rpm or more
Starter	OFF
Time after starter ON to OFF	3 sec. or more

TYPICAL MALFUNCTION THRESHOLDS

DTC P0335

TYPICAL MALFUNCTION THRESHOLDS (DTC P0335)

CKP signal	No signal

COMPONENT OPERATING RANGE

COMPONENT OPERATING RANGE

CKP signal	CKP sensor voltage fluctuates when the crankshaft rotates 34 CKP signals per 1 revolution crankshaft

WIRING DIAGRAM

cardiagn.com

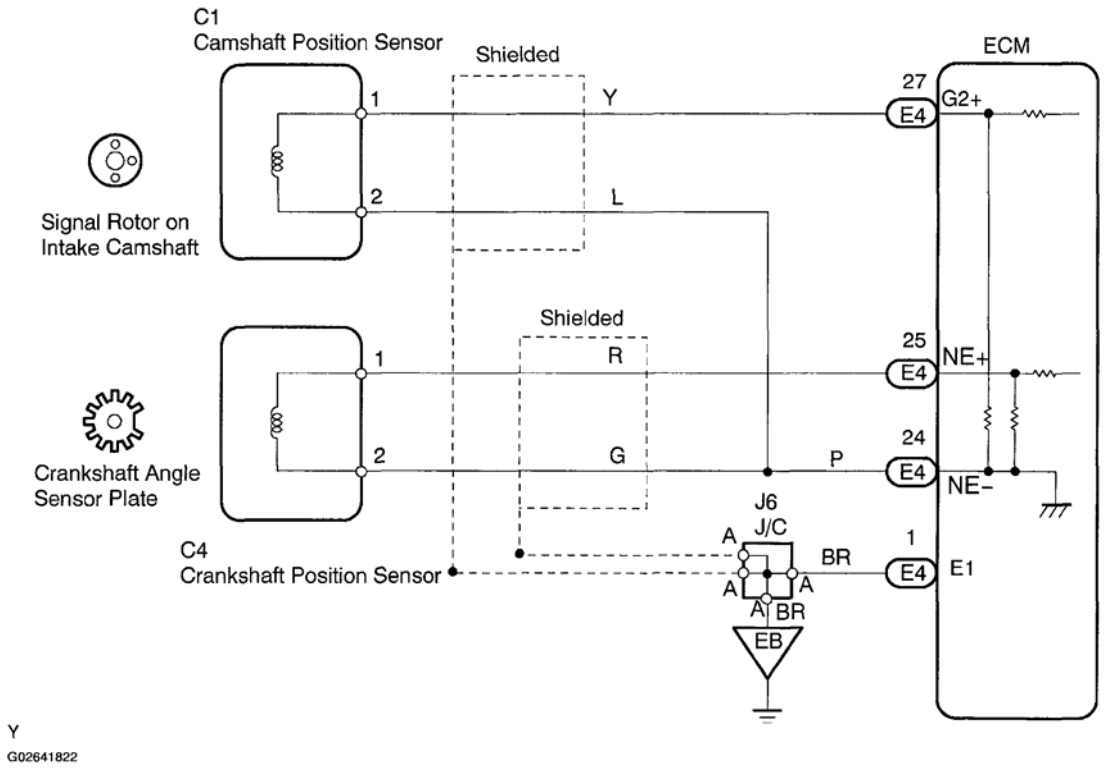

Fig. 125: Wiring Diagram - Crankshaft Position Sensor Circuit
Courtesy of TOYOTA MOTOR SALES, U.S.A., INC.

INSPECTION PROCEDURE

HINT:

- Read value of hand-held tester or OBD II scan tool
  a. Connect the hand-held tester or the OBD II scan tool to the DLC3.
  b. Start the engine and push the hand-held tester or the OBD II scan tool main switch ON.
  c. Enter the following menus: DIAGNOSIS / ENHANCED OBD II / DATA LIST / ALL/ ENGINE SPD.
- The engine speed can be confirmed in DATA LIST using the hand-held tester or OBD II scan tool. If there is no NE signals from the crankshaft position sensor despite the engine revolving, the engine speed will be indicated as zero. If voltage output of the crankshaft position sensor is insufficient, the engine speed will be indicated as lower PRM (than the actual RPM).
- Read freeze frame data using the hand - held tester or the OBD II scan tool. Freeze frame data records the engine conditions when a malfunction is detected. When troubleshooting, freeze frame data can help determine if the vehicle was running or stopped, if the engine was warmed up or not, if the air-fuel ratio was lean or rich, and other data from the time the malfunction occurred.

1. **Check resistance of crankshaft position sensor.**

cardiagn.com

CHECK:

Measure the resistance between the terminals of the crankshaft position sensor.

HINT:

In the above section, the terms "cold" and "hot" refer to the temperature of the coils. "Cold" means approximately -10 to 50°C (14 to 122°F). "Hot" means approximately 50 to 100°C (122 to 212°F).

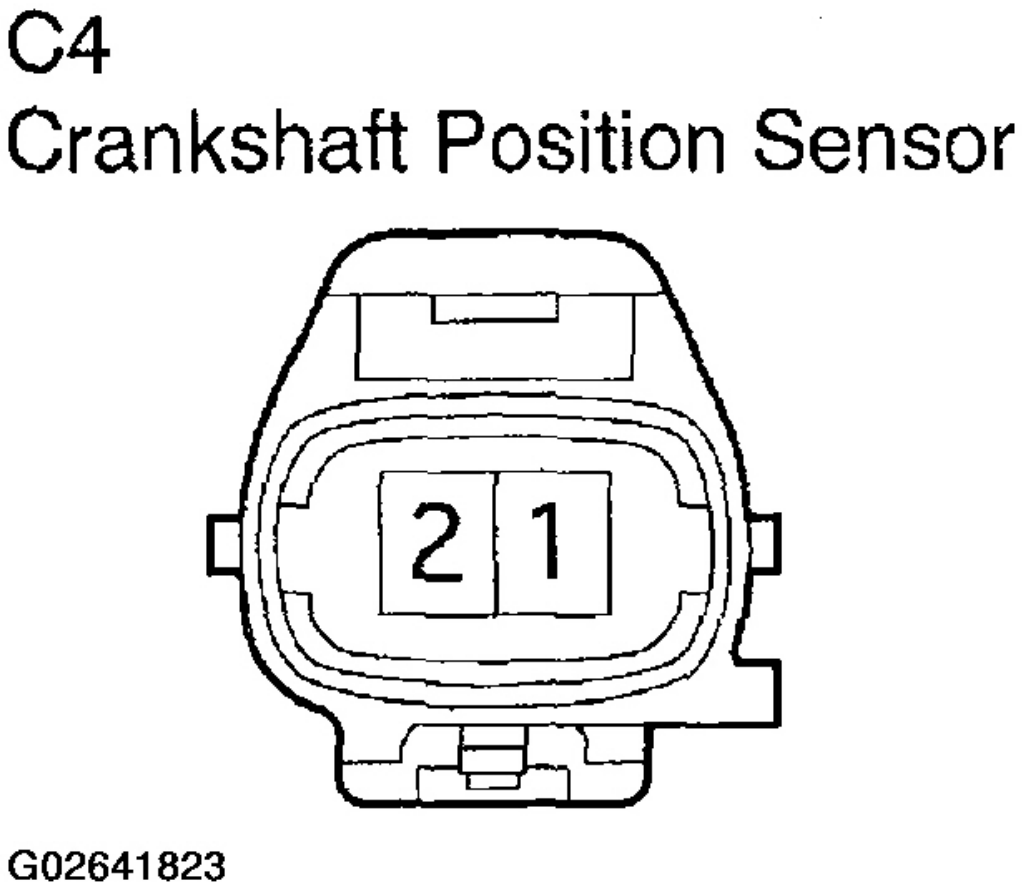

Fig. 126: Identifying Crankshaft Position Sensor Connector Terminals
Courtesy of TOYOTA MOTOR SALES, U.S.A., INC.

OK:

Resistance:

cardiagn.com

985 to 1,600 ohm at cold

1,265 to 1,890 ohm at hot

Reference: INSPECTION USING OSCILLOSCOPE

During cranking or idling, check the waveform between the terminals of the ECM connector.

ITEM AND CONTENTS

Item	Contents
Terminal	CH1:G2+-NE- CH2: NE+ - NE-
Equipment Set	5 V/DIV, 20 ms/DIV
Condition	During Cranking or idling

HINT:

The correct waveforms are as shown in the illustration.

cardiagn.com

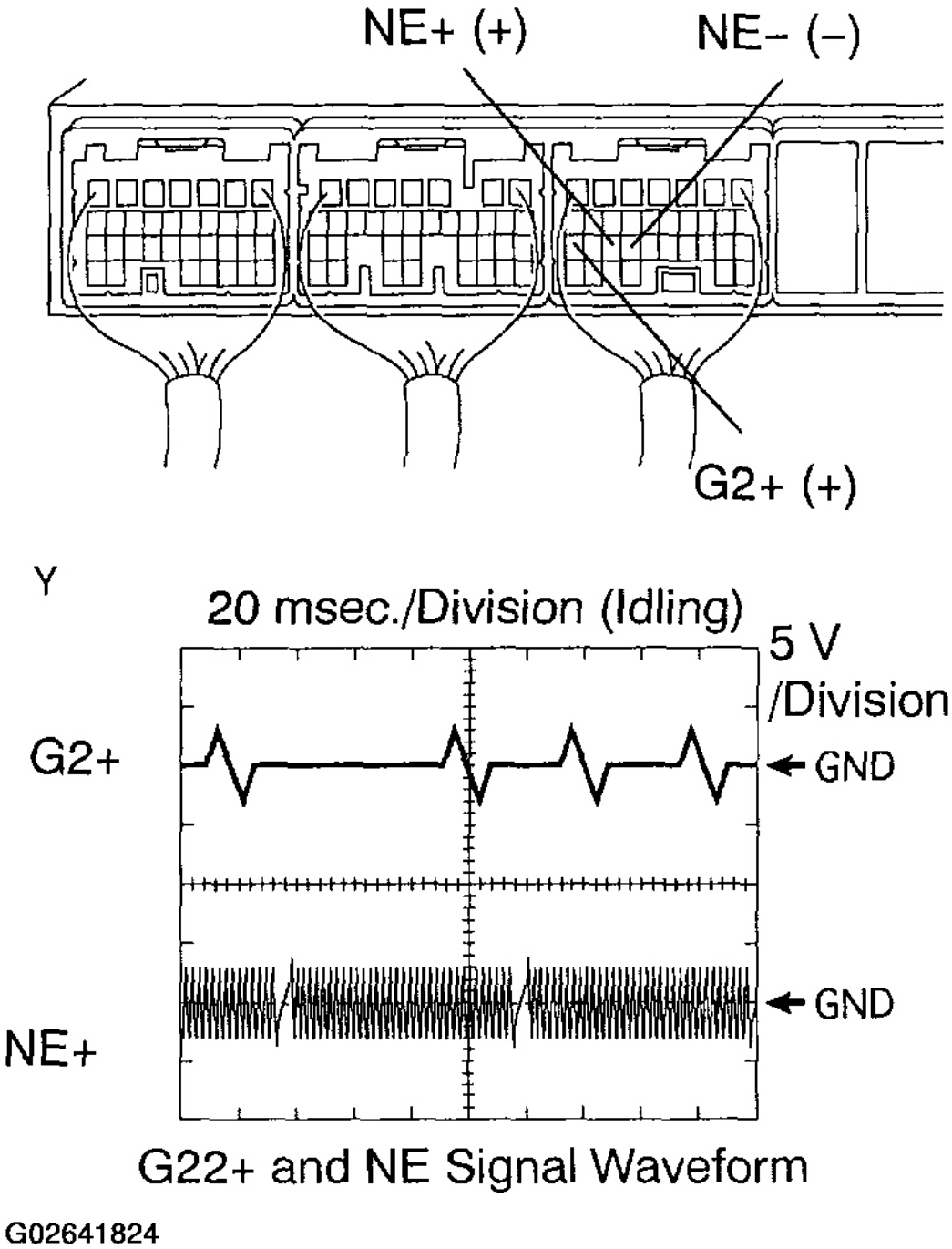

Fig. 127: Signal Waveform Graph (Between Terminals G2+ & NE Of ECM Connector)
Courtesy of TOYOTA MOTOR SALES, U.S.A., INC.

NG: Replace crankshaft position sensor.

cardiagn.com

OK: Go To Next Step.

2. **Check for open and short in wire harness between ECM and crankshaft position sensor (see HOW TO USE THE DIAGNOSTIC CHART AND INSPECTION PROCEDURE).**

   NG: Repair or replace harness and connector.

   OK: Go To Next Step.

3. **Check crankshaft position sensor installation (see HOW TO USE THE DIAGNOSTIC CHART AND INSPECTION PROCEDURE).**

   CHECK:

   Check the crankshaft position sensor installation.

   NG: Tighten sensor.

   OK: Go To Next Step.

4. **Inspect crankshaft position sensor plate No. 1 (Teeth of signal plate).**

   PREPARATION:

   Remove the crankshaft position sensor plate No. 1 (see **REMOVAL**).

   CHECK:

   Check the teeth of the sensor plate.

   NG: Replace crank shaft position sensor plate No. 1.

   OK: Replace ECM (see ENGINE CONTROL MODULE (ECM)).

DTC P0340, P0341: CAMSHAFT POSITION SENSOR "A" CIRCUIT RANGE/PERFORMANCE (BANK 1 OR SINGLE SENSOR)

CIRCUIT DESCRIPTION

The camshaft position (CMP) sensor, like the Crankshaft Position (CKP) sensor, consists of a magnet and an iron core wrapped in copper wire. The camshaft has 3 teeth and the CMP sensor is installed so that it can detect these teeth passing by. When the camshaft rotates and the teeth pass by the CMP sensor, the magnet on the CMP sensor creates a magnetic field and voltage is generated in the copper wire. When the crankshaft makes 2 rotation, voltage will be generated in the CMP sensor 3 times. The CKP sensor is roughly the same. When the crankshaft makes 1 rotation, its 34 teeth pass by the CKP sensor and voltage is generated 34 times. The camshaft rotates at half the speed of the crankshaft. Therefore, the CMP sensor generates voltage 3 times in the time the crankshaft takes to make 2 rotations.

The Engine Control Module (ECM) detects generation of these voltages to locate the camshaft position, which are used to indicate the cylinder.

cardiagn.com

DTC No.	DTC Detection Condition	Trouble Area
P0340	• No camshaft position sensor signal to ECM during cranking (2 trip detection logic) • No camshaft position sensor signal to ECM with engine speed 600 rpm or more (1 trip detection logic)	• Open or short in camshaft position sensor circuit • Camshaft position sensor • Timing chain has jumped a tooth • ECM
P0341	While crankshaft rotates twice, camshaft position sensor signal is input to ECM 12 times or more (1 trip detection logic)	

G02641825

Fig. 128: DTC P0340 & P0341 - DTC Detection Condition Chart
Courtesy of TOYOTA MOTOR SALES, U.S.A., INC.

MONITOR DESCRIPTION

If there is no signal from the camshaft position sensor even though the engine is revolving, or if the rotation of the camshaft and the crankshaft is not synchronized, the ECM interprets this as a malfunction of the sensor.

MONITOR STRATEGY

MONITOR STRATEGY

Related DTCs	P0340: CMP sensor range check P0340: CMP/CKP misalignment P0341: CMP sensor malfunction
Required sensors / components (Main)	CMP sensor and VVT sensor
Required sensors / components (Related)	CKP sensor
Frequency of operation	Continuous
Duration	5 sec.
MIL operation	2 driving cycles: CMP sensor range check Immediate: CMP/CKP misalignment and CMP malfunction
Sequence of operation	None

TYPICAL ENABLING CONDITIONS

TYPICAL ENABLING CONDITIONS

The monitor will run whenever the following DTCs are not present	None

CMP Sensor Range Check (P0340):

TYPICAL ENABLING CONDITIONS (CMP SENSOR RANGE CHECK (P0340))

Starter	ON
Minimal battery voltage while starter ON	Less than 11 V

CMP/CKP Misalignment and CMP Sensor Malfunction (P0340):

TYPICAL ENABLING CONDITIONS (CMP/CKP MISALIGNMENT AND CMP SENSOR MALFUNCTION (P0340))

cardiagn.com

Engine RPM	600 rpm or more
Starter	OFF

TYPICAL MALFUNCTION THRESHOLDS

CMP Sensor Range Check (P0340):

TYPICAL MALFUNCTION THRESHOLDS (CMP SENSOR RANGE CHECK (P0340))

CMP signal	No signal

CMP/CKP Sensor Malfunction (P0340):

TYPICAL MALFUNCTION THRESHOLDS (CMP /CKP SENSOR MALFUNCTION (P0340))

CMP and CKP phase	Misaligned

CMP Sensor Malfunction (P0341):

TYPICAL MALFUNCTION THRESHOLDS (CMP SENSOR MALFUNCTION (P0341))

CMP and CKP phase	Misaligned
CMP signal per 2 revolutions crankshaft	12 CMP signals or more

COMPONENT OPERATING RANGE

COMPONENT OPERATING RANGE

CMP sensor signal	CMP sensor voltage fluctuates when the camshaft rotates 3 CMP signal per 1 revolution camshaft 3 CMP signals per 2 revolutions crankshaft

WIRING DIAGRAM

Refer to wiring diagram under **DTC P0335, P0339: CRANKSHAFT POSITION SENSOR "A" CIRCUIT MALFUNCTION/INTERMITTENT**.

INSPECTION PROCEDURE

HINT:

Read freeze frame data using the hand-held tester or the OBD II scan tool. Freeze frame data records the engine conditions when a malfunction is detected. When troubleshooting, freeze frame data can help determine if the vehicle was running or stopped, if the engine was warmed up or not, if the air-fuel ratio was lean or rich, and other data from the time the malfunction occurred.

1. **Check resistance of camshaft position sensor.**

   CHECK:

cardiagn.com

Measure the resistance between the terminals of the camshaft position sensor.

HINT:

In the above section, the terms "cold" and "hot" refer to the temperature of the coils. "Cold" means approximately -10 to 50°C (14 to 122°F). "Hot" means approximately 50 to 100°C (122 to 212°F).

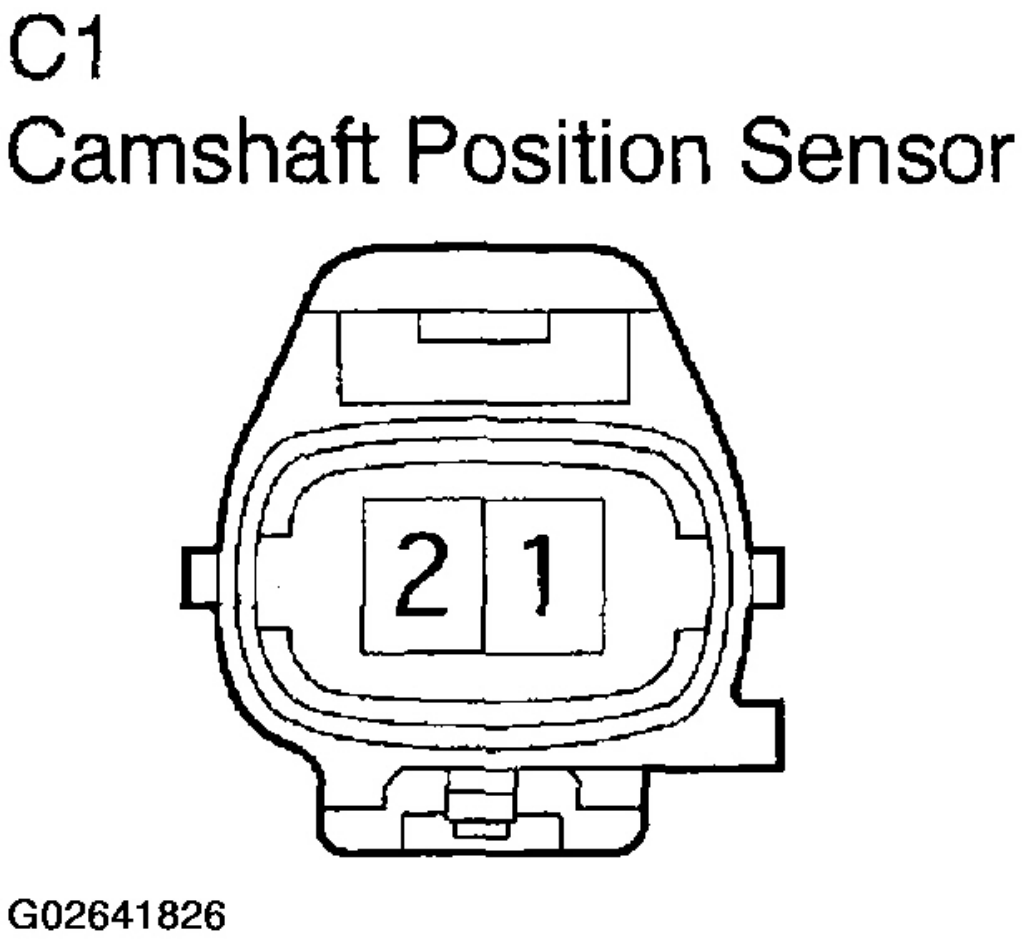

Fig. 129: Identifying Camshaft Position Sensor Connector Terminals
Courtesy of TOYOTA MOTOR SALES, U.S.A., INC.

OK

Resistance:

cardiagn.com

835 to 1,400 ohm at cold

1,060 to 1,645 ohm at hot

Reference: INSPECTION USING OSCILLOSCOPE

During cranking or idling, check the waveform between the terminals of the ECM connector.

ITEM AND CONTENTS

Item	Contents
Terminal	CH1:G2+-NE- CH2:NE+-NE-
Equipment Set	5V/DIV, 20ms/DIV
Condition	During Cranking or idling

HINT:

The correct waveforms are as shown in the left.

cardiagn.com

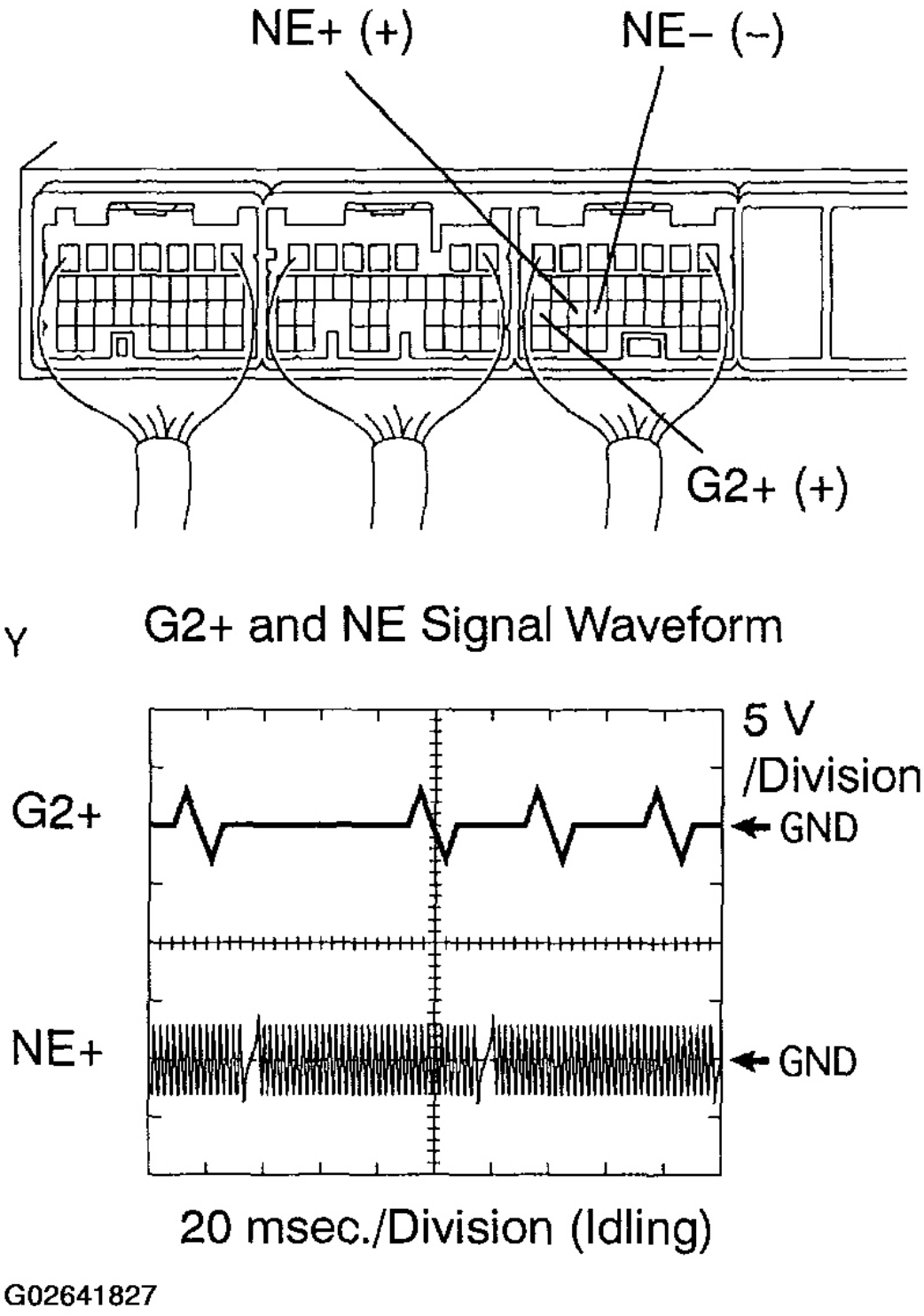

Fig. 130: Signal Waveform Graph (Between Terminals G2+ & NE Of ECM Connector)

cardiagn.com

Courtesy of TOYOTA MOTOR SALES, U.S.A., INC.

NG: Replace camshaft position sensor.

OK: Go To Next Step.

2. **Check for open and short in wire harness between ECM and camshaft position sensor (see HOW TO USE THE DIAGNOSTIC CHART AND INSPECTION PROCEDURE).**

   NG: Repair or replace harness and connector.

   OK: Go To Next Step.

3. **Check camshaft position sensor installation.**

   Inspect the camshaft position sensor installation.

   NG: Tighten sensor.

   OK: Go To Next Step.

4. **Inspect camshaft.**

   PREPARATION:

   Remove the camshaft (see **REMOVAL**).

   CHECK:

   Check the camshaft lobes.

   NG: Replace camshaft.

   OK: Replace ECM (see ENGINE CONTROL MODULE (ECM)).

DTC P0351, P0352, P0353, P0354: IGNITION COIL "A-D" PRIMARY/SECONDARY CIRCUIT

HINT:

- These DTCs indicate a malfunction related to primary circuit.
- If DTC P0351 is displayed, check No. 1 ignition coil with igniter circuit.
- If DTC P0352 is displayed, check No. 2 ignition coil with igniter circuit.
- If DTC P0353 is displayed, check No. 3 ignition coil with igniter circuit.
- If DTC P0354 is displayed, check No. 4 ignition coil with igniter circuit.

CIRCUIT DESCRIPTION

A Direct Ignition System (DIS) is used on this vehicle.

The DIS is a 1-cylinder ignition system which ignites one cylinder with one ignition coil. In the 1-cylinder ignition system, one spark plug is connected to the end of the secondary winding. High-voltage is generated in the secondary winding and is applied directly to the spark plug. The spark of the spark plug passes from the

cardiagn.com

center electrode to the ground electrode.

The ECM determines the ignition timing and outputs the ignition signals (IGTs) for each cylinder. Using the IGT, the ECM turns on and off the power transistor inside the igniter, which switches on and off current to the primary coil. When current to the primary coil is cut off, high-voltage is generated in the secondary coil and this voltage is applied to the spark plugs to create sparks inside the cylinders. As the ECM cuts the current to the primary coil, the igniter sends back the ignition confirmation signal (IGF) for each cylinder ignition to the ECM.

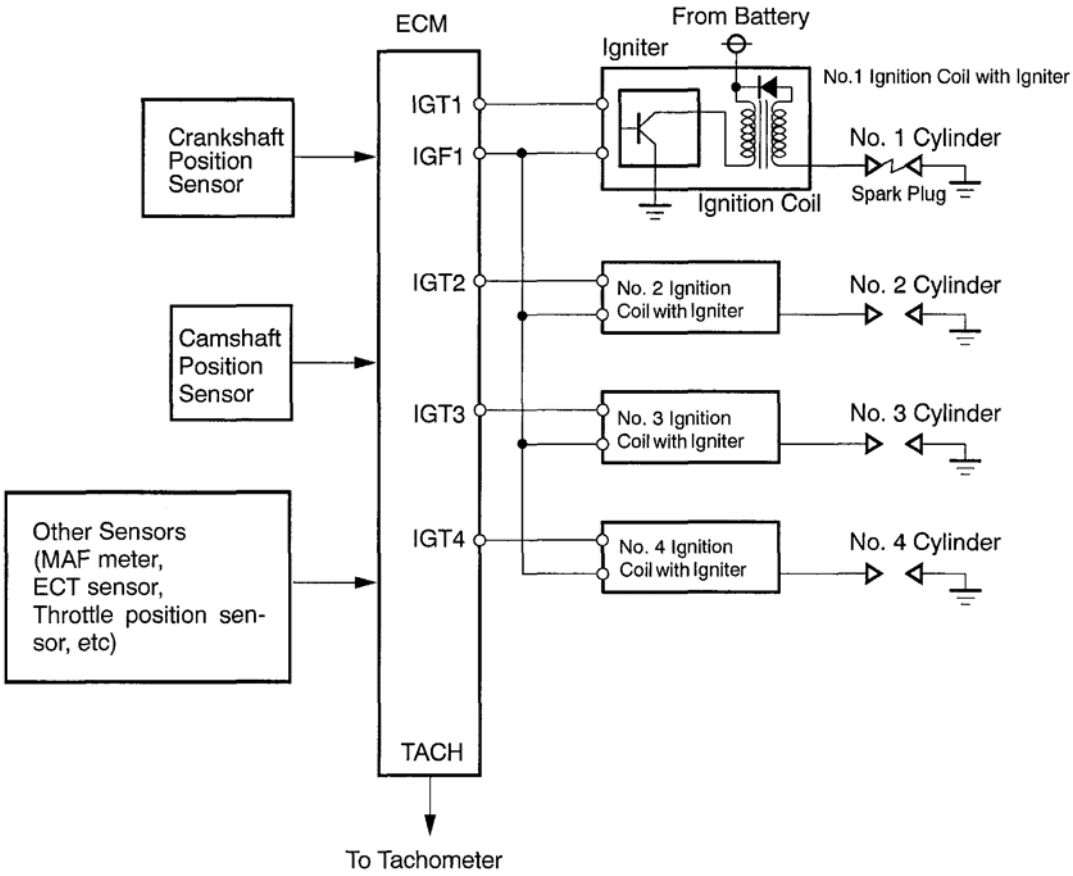

Y
G02641828

Fig. 131: Circuit Description - Ignition Coil
Courtesy of TOYOTA MOTOR SALES, U.S.A., INC.

cardiagn.com

DTC No.	DTC Detection Condition	Trouble Area
P0351 P0352 P0353 P0354	No IGF signal to ECM while engine is running	• Ignition system • Open or short in IGF and IGT1 to 4 circuits from ignition coil with igniter assy to ECM • No. 1 to 4 ignition coils with igniter assy (primary ignition) • ECM

G02641829

Fig. 132: DTC P0351, P0352, P0353 & P0354 - DTC Detection Condition Chart
Courtesy of TOYOTA MOTOR SALES, U.S.A., INC.

MONITOR DESCRIPTION

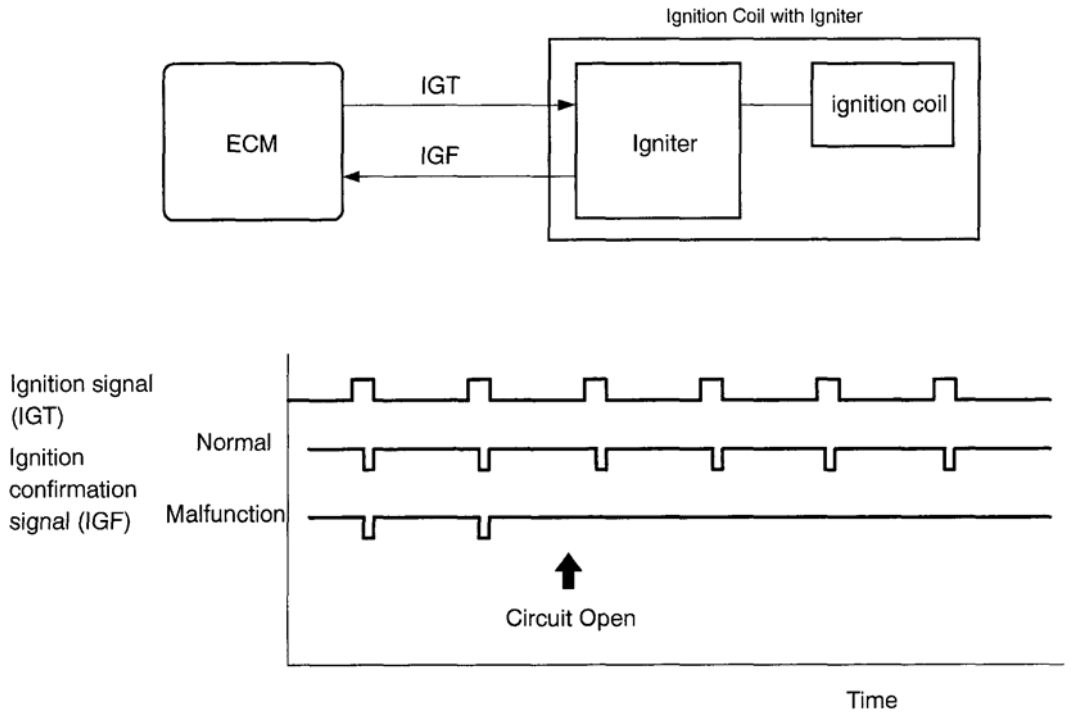

Y
G02641830

Fig. 133: Ignition Coil Communication Diagram With ECM
Courtesy of TOYOTA MOTOR SALES, U.S.A., INC.

If the ECM does not receive the ignition confirmation signal (IGF) after sending the ignition signal (IGT), it interprets this as a fault in the igniter and sets a DTC.

MONITOR STRATEGY

MONITOR STRATEGY

	P0351: Igniter (Cylinder 1) malfunction

cardiagn.com

Related DTCs	P0352: Igniter (Cylinder 2) malfunction P0353: Igniter (Cylinder 3) malfunction P0354: Igniter (Cylinder 4) malfunction
Required sensors / components (Main)	Igniter
Required sensors / components (Related)	CKP sensor
Frequency of operation	Continuous
Duration	0.256 sec.+ 4 sparks
MIL operation	Immediate
Sequence of operation	None

TYPICAL ENABLING CONDITIONS

TYPICAL ENABLING CONDITIONS

The monitor will run whenever the following DTCs are not present	None
Starter OFF or Engine RPM	1,500 rpm or more

TYPICAL MALFUNCTION THRESHOLDS

TYPICAL MALFUNCTION THRESHOLDS

Ignition signal fail count	More than 2
Ignition fail count is as follows	When IGF should have returned despite sending IGT

COMPONENT OPERATING RANGE

TYPICAL MALFUNCTION THRESHOLDS

IGF signal	Igniter outputs IGF signal when it receives IGT signal from ECM

WIRING DIAGRAM

cardiagn.com

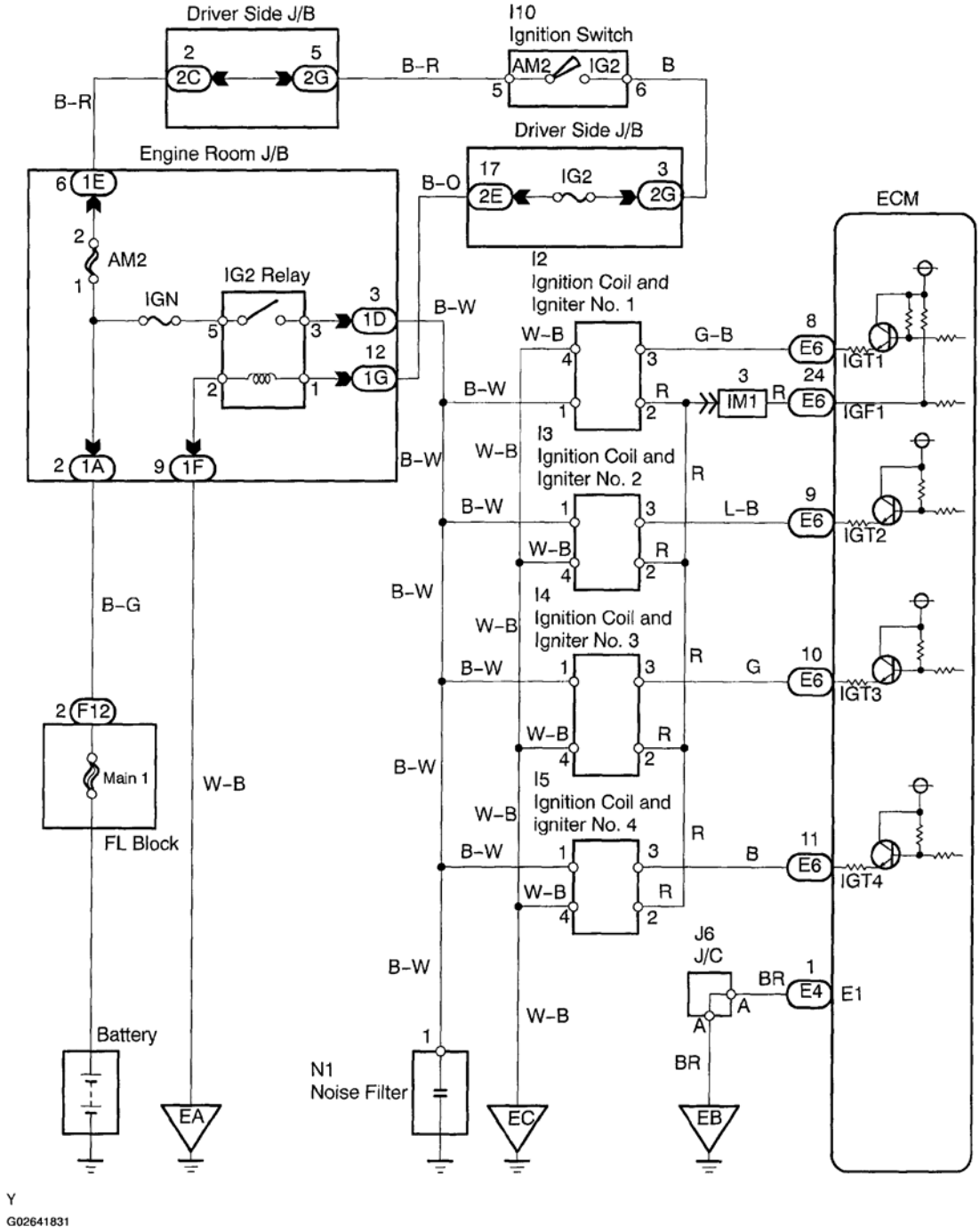

Fig. 134: Wiring Diagram - Ignition Coil Circuit
Courtesy of TOYOTA MOTOR SALES, U.S.A., INC.

INSPECTION PROCEDURE

HINT:

cardiagn.com

Read freeze frame data using the hand-held tester or the OBD II scan tool. Freeze frame data records the engine conditions when a malfunction is detected. When troubleshooting, freeze frame data can help determine if the vehicle was running or stopped, if the engine was warmed up or not, if the air-fuel ratio was lean or rich, and other data from the time the malfunction occurred.

1. **Check spark plug and spark of misfiring cylinder (see IGNITION SYSTEM).**

   NG: Go to step 4.

   OK: Go To Next Step.

2. **Check for open and short in wire harness in IGF and IGT signal circuit between ECM and ignition coil with igniter (see HOW TO USE THE DIAGNOSTIC CHART AND INSPECTION PROCEDURE).**

   NG: Replace harness and connector.

   OK: Go To Next Step.

3. **Disconnect ignition coil with igniter connector and check voltage between terminal IGF1 of ECM connector and body ground.**

   PREPARATION:

   a. Remove the glove compartment (see **ENGINE CONTROL MODULE (ECM)**).
   b. Disconnect the ignition coil with igniter connector.
   c. Turn the ignition switch ON.

   CHECK:

   Measure the voltage between terminal IGF1 of the ECM connector and body ground.

   OK:

   Voltage: 4.5 to 5.5 V

cardiagn.com

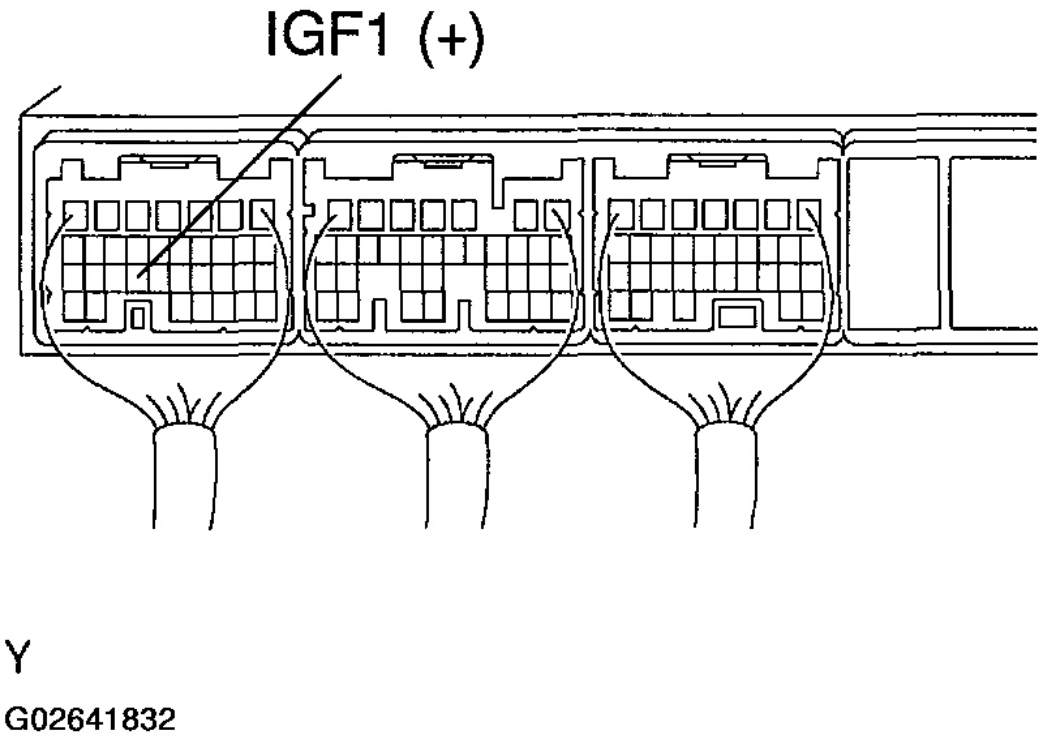

Fig. 135: Identifying Terminal IGF1 Of ECM Connector
Courtesy of TOYOTA MOTOR SALES, U.S.A., INC.

NG: Replace ECM (see ENGINE CONTROL MODULE (ECM))

OK: Replace ignition coil with igniter.

4. **Check for open and short in wire harness in IGT signal circuit between ECM and ignition coil with igniter (see HOW TO USE THE DIAGNOSTIC CHART AND INSPECTION PROCEDURE).**

   NG: Repair or replace harness and connector.

   OK: Go To Next Step.

5. **Check voltage between terminals IGT1 to IGT4 of ECM connector and body ground.**

PREPARATION:

Remove the glove compartment (see **ENGINE CONTROL MODULE (ECM)**).

CHECK:

Measure the voltage between terminals IGT1 to IGT4 of the ECM connector and the body ground when the engine is cranked.

cardiagn.com

OK:

Voltage: More than 0.1 V and less than 4.5 V

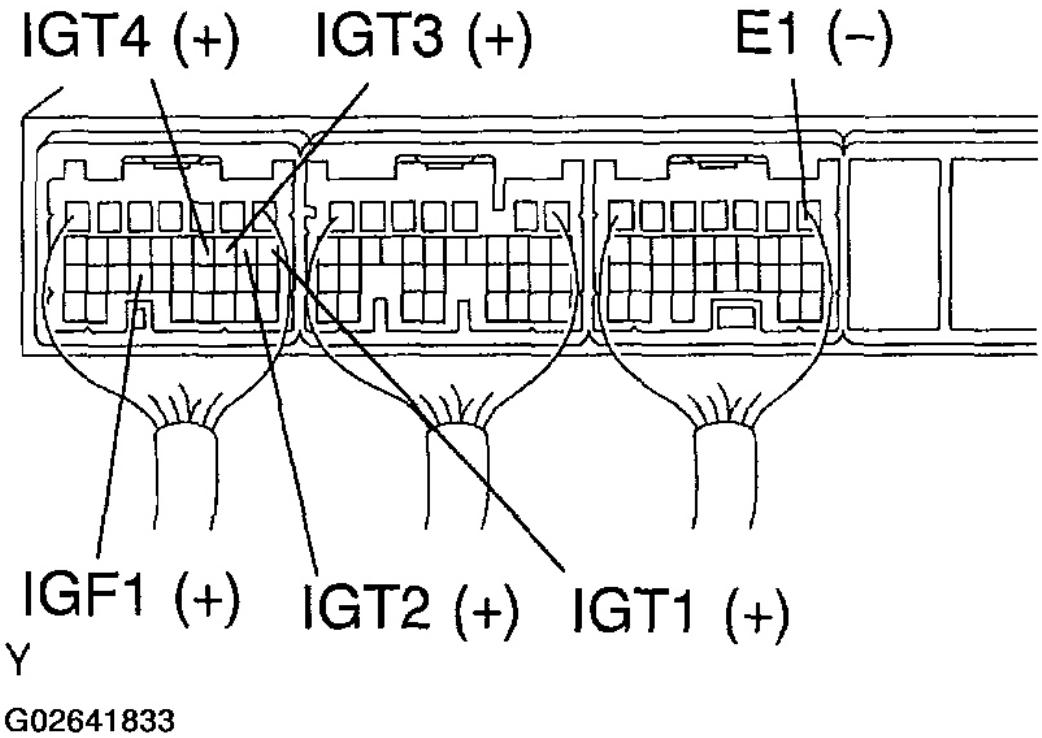

Fig. 136: Identifying ECM Connector Terminals
Courtesy of TOYOTA MOTOR SALES, U.S.A., INC.

Reference: INSPECTION USING OSCILLOSCOPE

During cranking or idling, check the waveform between terminals IGT1 to IGT4 and E1, and IGF1 and E1 of the ECM connector.

HINT:

The correct waveforms are as shown.

cardiagn.com

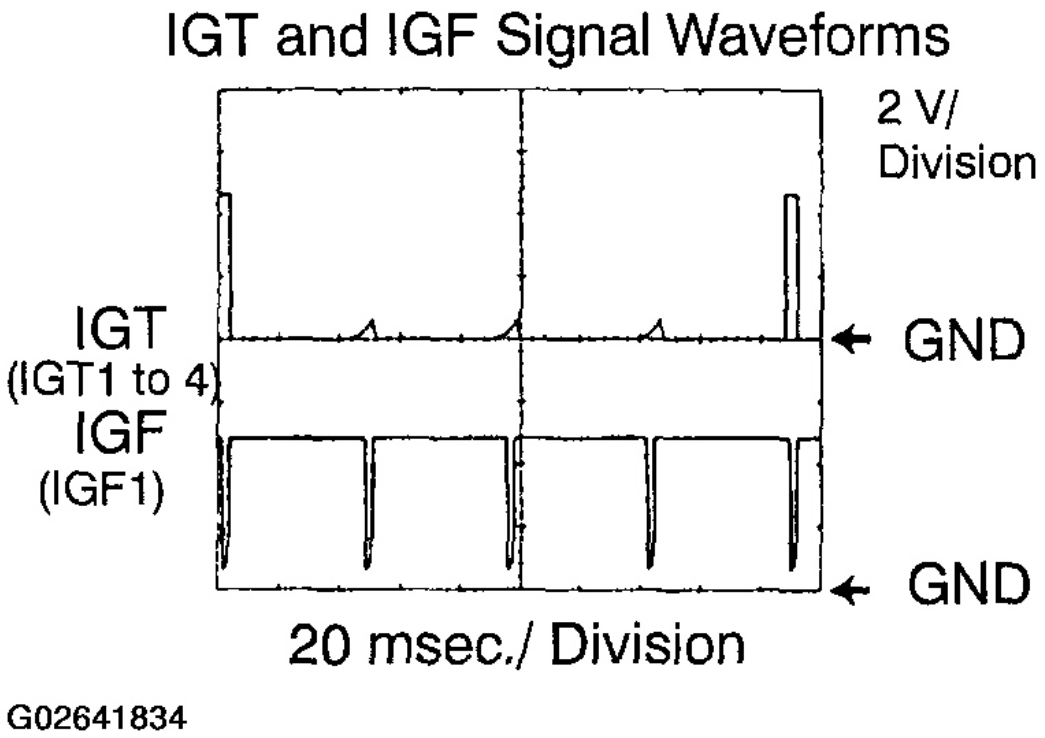

Fig. 137: Signal Waveform Graph (Between Terminals IGT & IGF Of ECM Connector)
Courtesy of TOYOTA MOTOR SALES, U.S.A., INC.

NG: Replace ECM (see ENGINE CONTROL MODULE (ECM)).

OK: Go To Next Step.

6. **Disconnect ignition coil with igniter connector and check voltage between terminals IGT1 to IGT4 of ECM connector and body ground.**

PREPARATION:

a. Remove the glove compartment (see **ENGINE CONTROL MODULE (ECM)**).
b. Disconnect the ignition coil with igniter connector.

CHECK:

Measure the voltage between terminals IGT1 to IGT4 of the ECM connector and the body ground when the engine is cranked.

OK:

cardiagn.com

Voltage: More than 0.1 V and less than 4.5 V

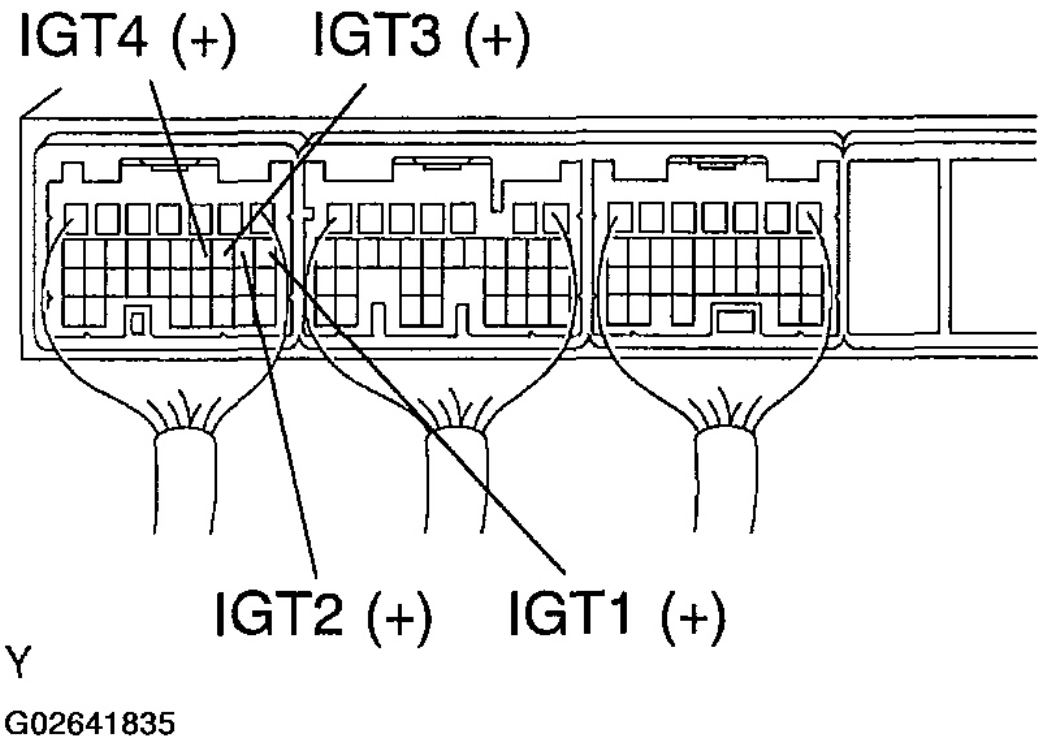

Fig. 138: Identifying ECM Connector Terminals
Courtesy of TOYOTA MOTOR SALES, U.S.A., INC.

NG: Replace ECM (see ENGINE CONTROL MODULE (ECM)).

OK: Go To Next Step.

7. **Check ignition coil with igniter power source circuit.**

PREPARATION:

Disconnect the ignition coil with igniter connector.

CHECK:

Measure the voltage between terminal 1 of the ignition coil with igniter connector and the body ground when the ignition switch is turned the to ON or START position.

OK:

Voltage: 9 to 14 V

cardiagn.com

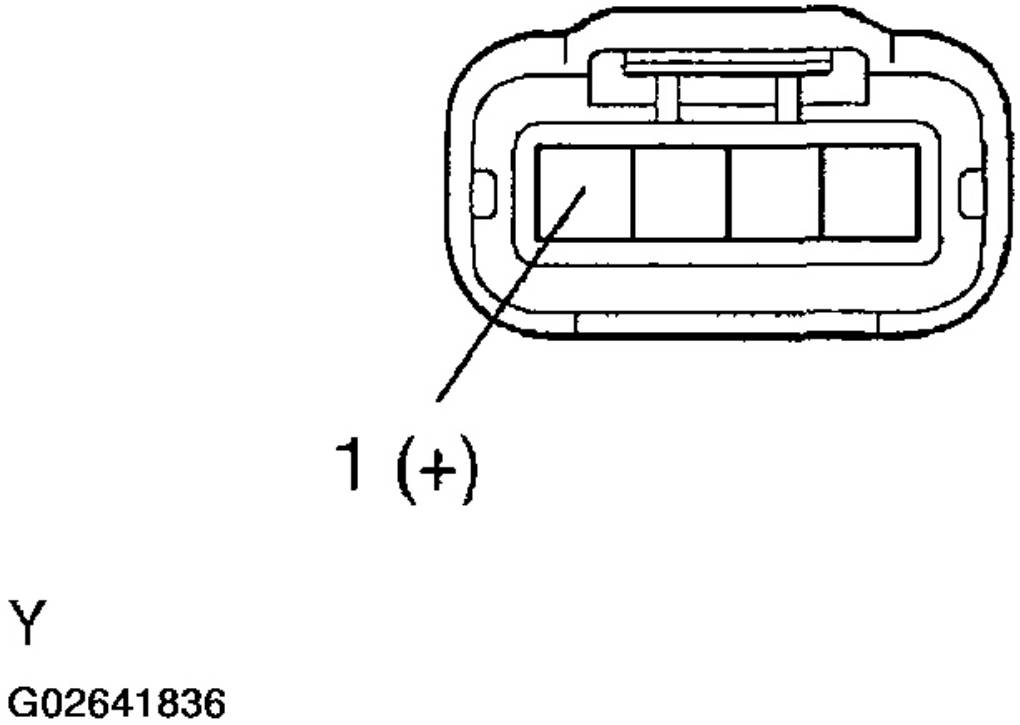

Fig. 139: Identifying Terminal 1 Of Ignition Coil
Courtesy of TOYOTA MOTOR SALES, U.S.A., INC.

NG: Repair ignition coil with igniter power source circuit.

OK: Go To Next Step.

8. **Check for open and short in are wire harness between ignition switch and ignition coil with igniter (see HOW TO USE THE DIAGNOSTIC CHART AND INSPECTION PROCEDURE).**

   NG: Repair or replace harness and connector.

   OK: Replace ignition coil with igniter.

DTC P0420: CATALYST SYSTEM EFFICIENCY BELOW THRESHOLD (BANK 1)

MONITOR DESCRIPTION

The ECM uses sensors mounted before and after the three-way catalyst (TWC) to monitor its' efficiency. The first sensor, an air fuel ratio sensor (A/F sensor), sends pre-catalyst A/F ratio information to the ECM. The second sensor, a heated oxygen sensor (O2S), sends post-catalyst information to the ECM. The ECM compares these two signals to judge the efficiency of the catalyst and the catalyst's ability to store oxygen. During normal operation, the TWC stores and releases oxygen as needed. The capacity to store oxygen results in a low

cardiagn.com

variation in the post-TWC exhaust stream as shown below.

If the catalyst is functioning normally, the waveform of the heated oxygen sensor slowly switches between RICH and LEAN.

If the catalyst is deteriorated, the waveform will alternate frequently between RICH and LEAN. As the catalyst efficiency degrades, its ability to store oxygen is reduced and the catalyst output becomes more variable. When running the monitor, the ECM compares sensor 1 signals (A/F sensor) over a specific amount of time to determine catalyst efficiency. The ECM begins by calculating the signal length for both sensors (for the rear oxygen sensor, the ECM uses the output voltage signal length).

If the oxygen sensor output voltage signal length is greater than the threshold (threshold is calculated based on the A/F sensor signal length), the ECM concludes that the catalyst is malfunctioning. The ECM will turn on the MIL and a DTC will be set.

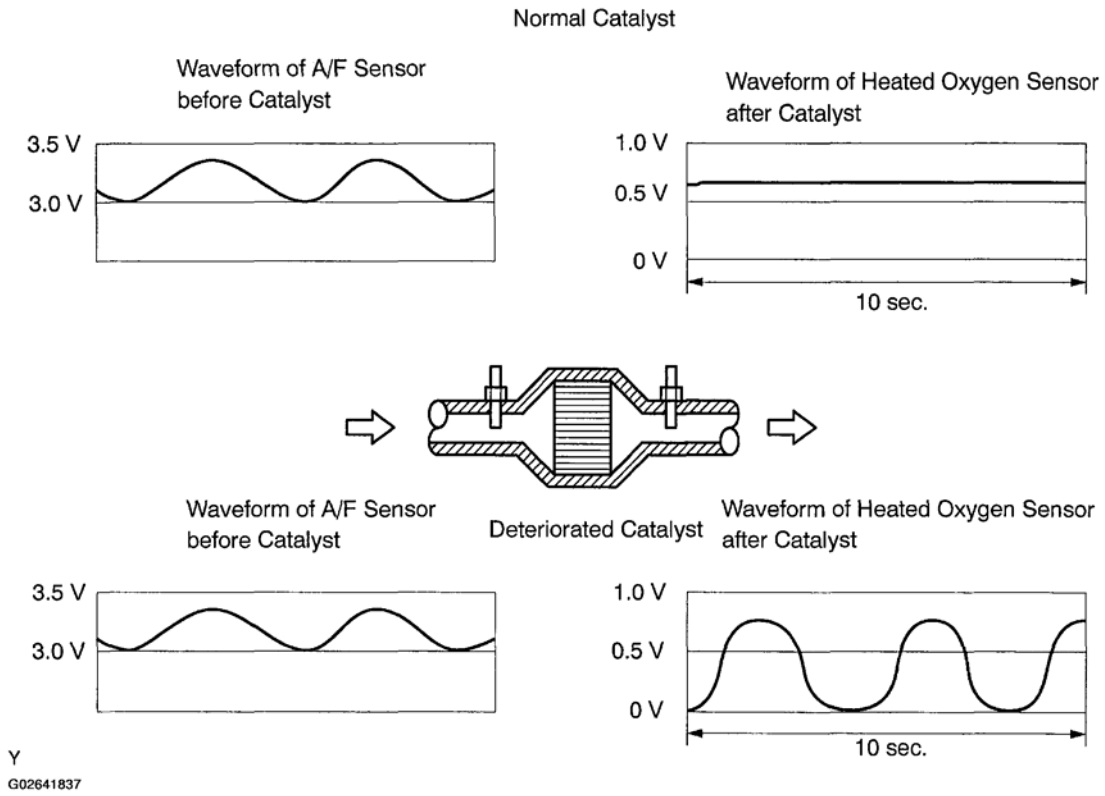

Fig. 140: A/F Sensor Waveform Graph (Before & After Catalyst/After Catalyst)
Courtesy of TOYOTA MOTOR SALES, U.S.A., INC.

cardiagn.com

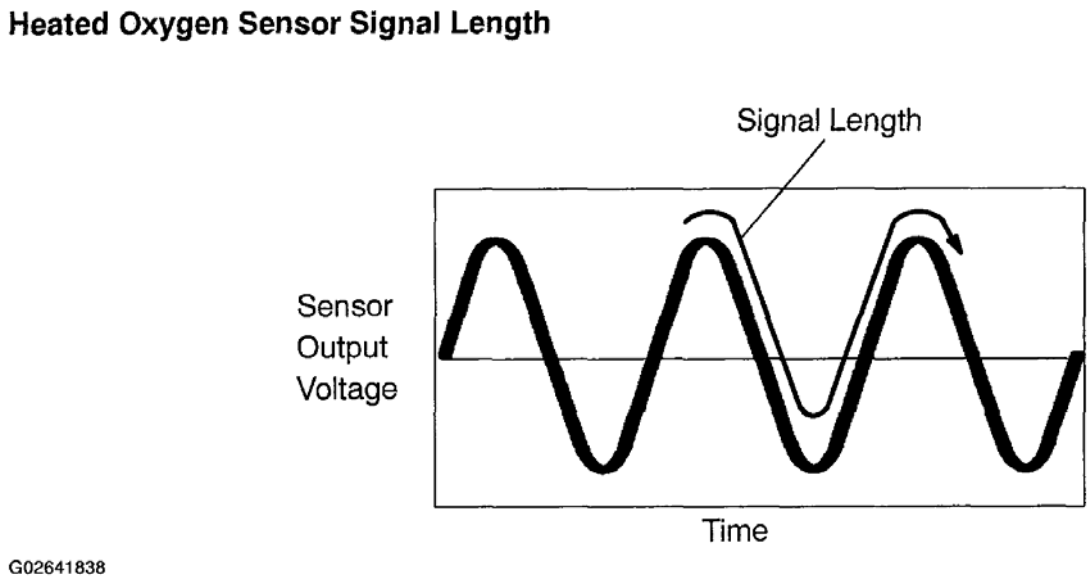

Fig. 141: Heated Oxygen Sensor Signal Length Graph
Courtesy of TOYOTA MOTOR SALES, U.S.A., INC.

DTC No.	DTC Detection Condition	Trouble Area
P0420	After engine and catalyst are warmed up, and while vehicle is driven within set vehicle and engine speed waveform of heated oxygen sensor (bank 1 sensor 2) alternates frequently between RICH and LEAN (2 trip detection logic)	• Gas leakage in exhaust system • A/F sensor (bank 1 sensor 1) • Heated oxygen sensor (bank 1 sensor 2) • Three-way catalytic converter (Exhaust manifold)

G02641839

Fig. 142: DTC P0420 - DTC Detection Condition Chart
Courtesy of TOYOTA MOTOR SALES, U.S.A., INC.

MONITOR STRATEGY

MONITOR STRATEGY

Related DTCs	P0420: Catalyst deterioration
Required sensors / components (Main)	Catalyst
Required sensors / components (Related)	A/F sensor, Rear HO2S, IAT sensor, MAF meter, CKP sensor, ECT sensor
Frequency of operation	Once per driving cycle
Duration	150 sec. (30 sec. x 5)
MIL operation	2 driving cycles
Sequence of operation	None

TYPICAL ENABLING CONDITIONS

cardiagn.com

ENGINE ENABLING CONDITION

The monitor will run whenever the following DTCs are not present	See **PRE-CHECK**
Accumulated time that the following conditions are met	30 sec.
Battery voltage	11 V or more
IAT	-10 °C (14°F) or more
Idle	OFF
MAF	8 to 35 g/sec.
RPM	Less than 4,500 RPM
ECT	75° C (167°F) or more
Estimated catalyst temperature	Up stream catalyst: 550 to 900°C (1,022 to 1,652°F)
Estimated catalyst temperature	Down stream catalyst: 550 to 900°C (1,022 to 1,652°F)
Fuel system status	Closed Loop
AF sensor voltage	3 to 3.5 V

TYPICAL MALFUNCTION THRESHOLDS

TYPICAL MALFUNCTION THRESHOLDS

Number that the following condition is set:	5 times (M/T) 4 times (A/T)
Rear HO2S locus length	35 V or more (M/T) (Varies with A/F sensor locus length) 30 V or more (A/T) (Varies with A/F sensor locus length)

MONITOR RESULT

Refer to **PRE-CHECK** for detailed information.

MONITOR RESULT

TEST ID	Description of TEST DATA	Conversion Factor	Unit	Standard Value
$01	Ratio of rear HO2S (bank 1) locus length and criteria locus length of bank 1 catalyst	Multiply by 0.0078	N/A	1 or less

CONFIRMATION ENGINE RACING PATTERN

cardiagn.com

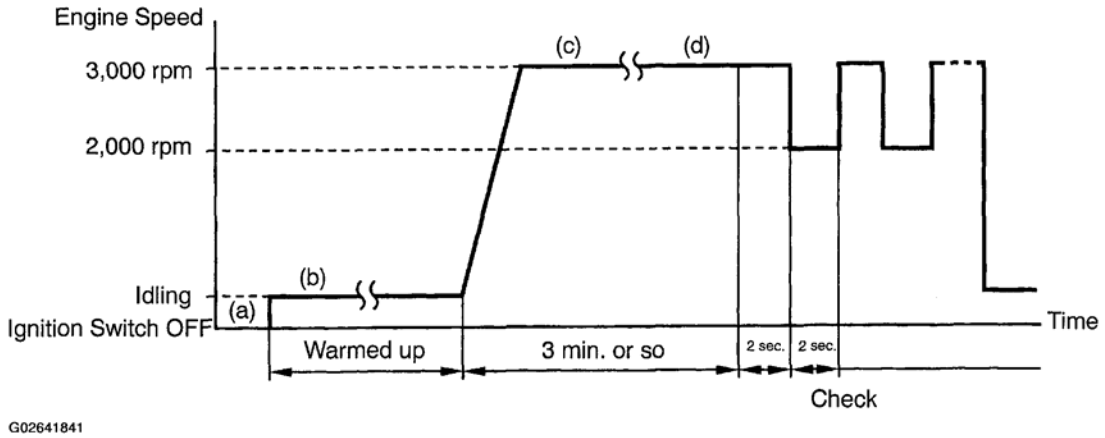

Fig. 143: Confirmation Engine Speed Graph
Courtesy of TOYOTA MOTOR SALES, U.S.A., INC.

a. Connect the hand-held tester or OBD II scan tool to the DLC3.
b. Start the engine and warm it up with all the accessories switched OFF until the engine coolant temperature is stable.
c. Race the engine at 2,500 to 3,000 RPM for about 3 minutes.
d. When racing the engine at 3,000 RPM for 2 seconds and 2,000 RPM for 2 seconds alternately, check the waveform of the heated oxygen sensor (bank 1 sensor 2).

INSPECTION PROCEDURE

HINT:

Read freeze frame data using the hand-held tester or the OBD II scan tool. Freeze frame data records the engine conditions when a malfunction is detected. When troubleshooting, freeze frame data can help determine if the vehicle was running or stopped, if the engine was warmed up or not, if the air-fuel ratio was lean or rich, and other data from the time the malfunction occurred.

1. **Are there any other codes (besides P0420) being output?**

   HINT:

   If any other codes besides P0420 are output, perform the troubleshooting for those DTCs first.

   YES: Go to relevant DTC chart (see DIAGNOSTIC TROUBLE CODE CHART).
   NO: Go To Next Step.
2. **Check gas leakage in exhaust system.**
   NG: Repair or replace.
   OK: Go To Next Step.
3. **Check A/F sensor (bank 1 sensor 1) (see INSPECTION).**

cardiagn.com

NG: Replace A/F sensor.

OK: Go To Next Step.

4. **Check heated oxygen sensor (bank 1 sensor 2) (see INSPECTION).**

NG: Replace heated oxygen sensor.

OK:

Replace the front and rear three-way catalytic converter in bank malfunction is detected.

HINT:

Hand-held tester only:

The following procedure enables a technician to identify a trouble area if there is a malfunction in both front A/F sensor or rear heated oxygen sensor other than the catalyst converter, or the malfunction that indicates the actual air-fuel ratio extremely RICH or LEAN.

It is possible the malfunctioning area can be found using the ACTIVE TEST A/F CONTROL operation. The A/F CONTROL operation can determine if the A/F sensor, heated oxygen sensor or other potential trouble areas are malfunctioning or not.

Perform ACTIVE TEST A/F CONTROL operation.

HINT:

The A/F CONTROL operation lowers the injection volume 12.5% or increases the injection volume 25%.

1. Connect the hand-held tester to the DLC3 on the vehicle.
2. Turn the ignition switch ON.
3. Warm up the engine with the engine speed at 2,500 RPM for approximately 90 seconds.
4. Enter the following menus: DIAGNOSIS / ENHANCED OBD II / ACTIVE TEST / A/F CONTROL.
5. Perform the A/F CONTROL operation with the engine idle (press the right or left button).

Result:

Heated oxygen sensor reacts in accordance with increase and decrease of injection volume

+25% --> rich output: More than 0.5 V

-12.5% --> lean output: Less than 0.4 V

NOTE: However, there is a few second delay in the sensor 1 (front sensor) output. & there is about 20 seconds delay in the sensor 2 (rear sensor).

cardiagn.com

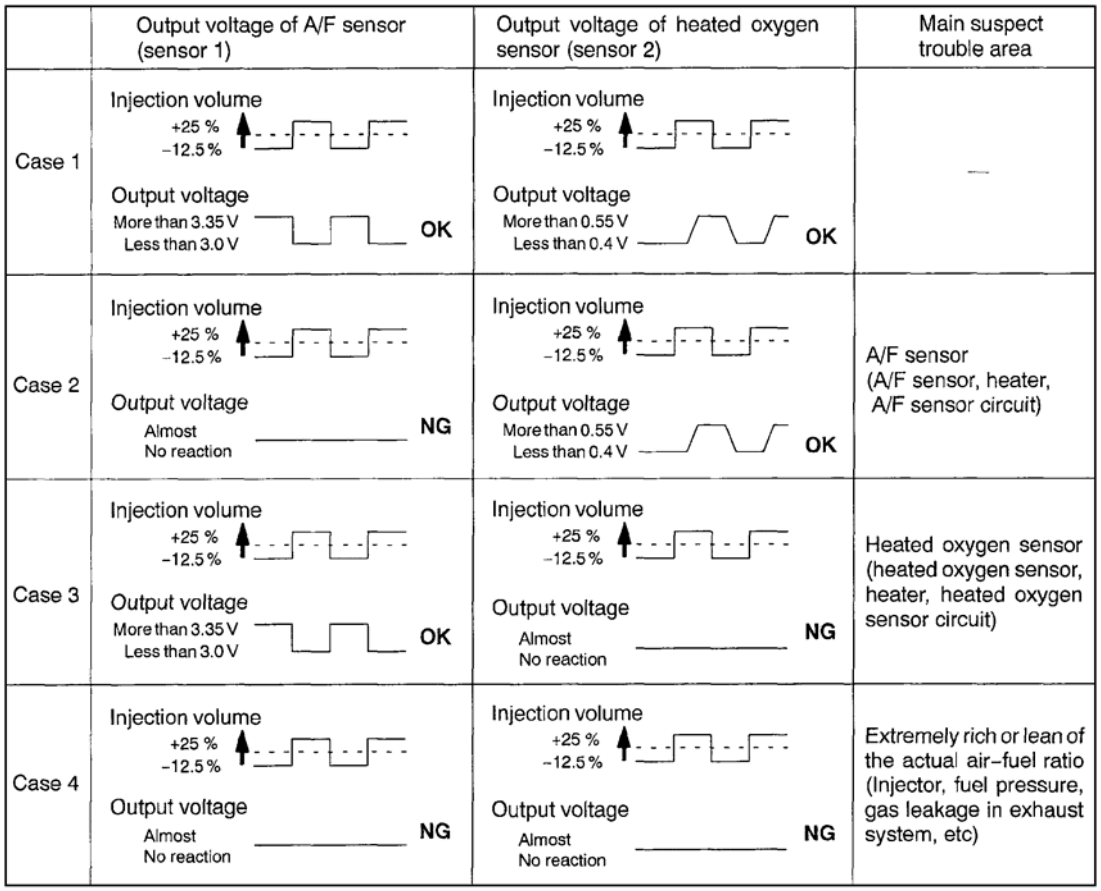

Fig. 144: A/F Sensor Output Voltage Graph (Sensor 1/Sensor 2)
Courtesy of TOYOTA MOTOR SALES, U.S.A., INC.

The following A/F CONTROL procedure enables a technician to check and graph the voltage output of the heated oxygen sensors (sensor 1 and 2).

For displaying the graph indication, enter "ACTIVE TEST / A/F CONTROL / USER DATA" then select "AFS B1S1 and O2S B1S2" by pressing "YES" button and push "ENTER" button before pressing "F4" button.

DTC P0441, P0446, P2418: EVAPORATIVE EMISSION CONTROL SYSTEM INCORRECT PURGE FLOW/VENT CONTROL CIRCUIT/VALVE CONTROL CIRCUIT/OPEN

CIRCUIT DESCRIPTION

The vapor pressure sensor, Canister Closed Valve (CCV), pressure switching valve are used to detect abnormalities in the evaporative emission control system.

The ECM decides whether there is an abnormality in the evaporative emission control system based on the vapor pressure sensor signal.

cardiagn.com

DTCs P0441, P0446 and P2418 are recorded in the ECM when evaporative emissions leak from the components within the dotted line in Fig. 1 below, or when there is a malfunction in both the EVAP VSV and pressure switching valve, or in the vapor pressure sensor itself.

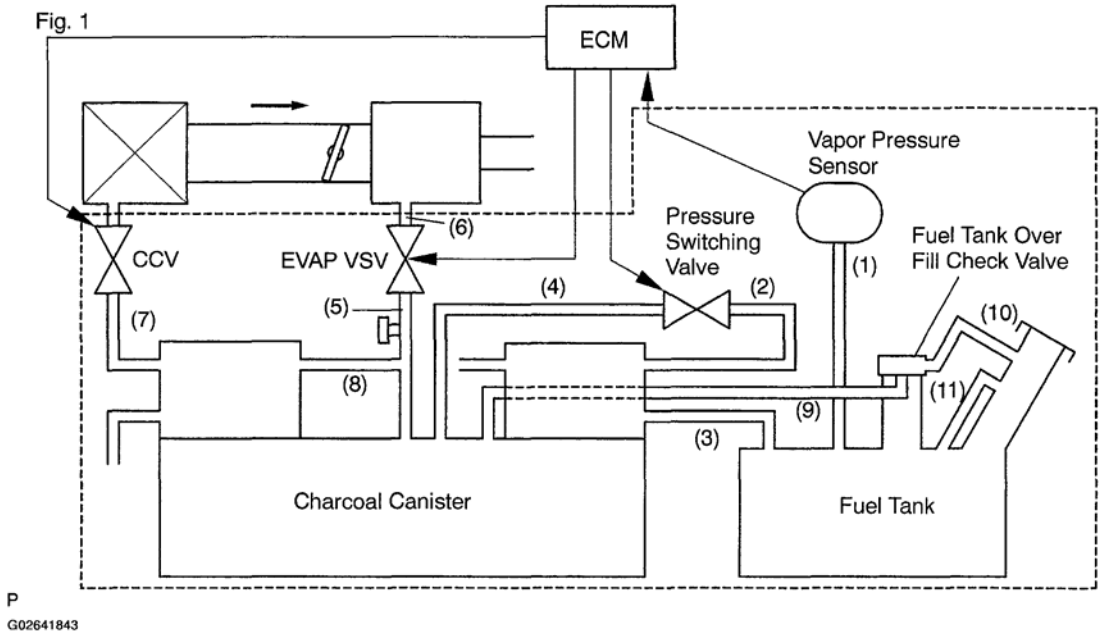

Fig. 145: System Diagram - Evaporative Emission Control System (1 Of 2)
Courtesy of TOYOTA MOTOR SALES, U.S.A., INC.

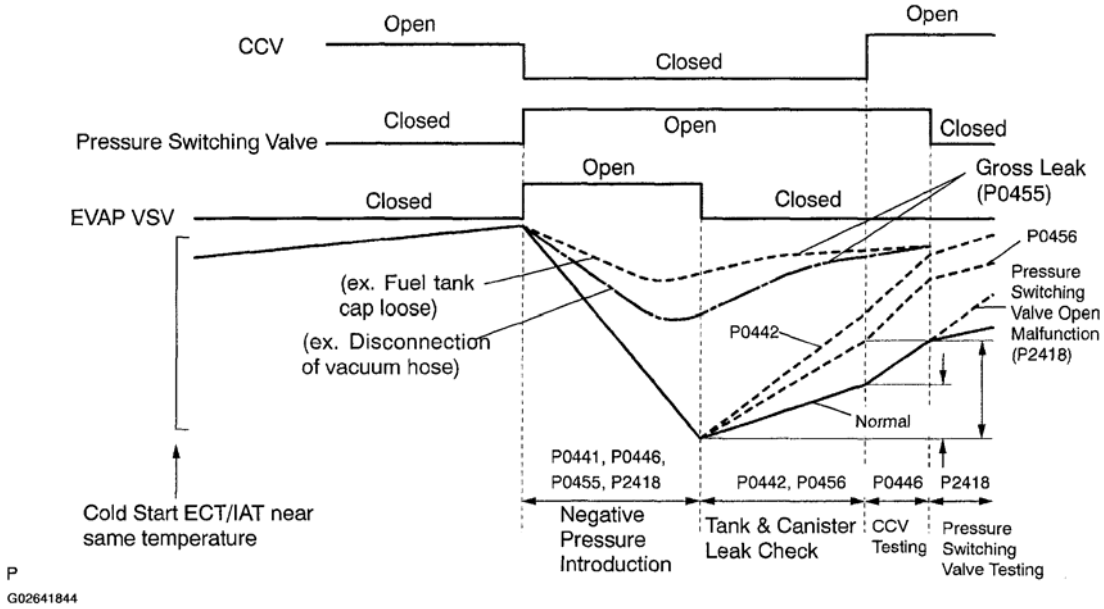

Fig. 146: System Diagram - Evaporative Emission Control System (2 Of 2)

cardiagn.com

Courtesy of TOYOTA MOTOR SALES, U.S.A., INC.

DTC No.	DTC Detecting Condition	Trouble Area
P0441	Pressure in charcoal canister and fuel tank does not drop during purge control (2 trip detection logic)	•Fuel tank cap incorrectly installed •Fuel tank cap cracked or damaged •Vacuum hose cracks, punctured, blocked, damaged or disconnected ((1), (2), (3), (4), (5), (6), (7), (8), (9), (10) and (11) in Fig. 1) •Open or short in vapor pressure sensor circuit •Vapor pressure sensor •Open or short in EVAP VSV circuit •EVAP VSV •Open or short in CCV circuit •CCV •Open or short in VSV circuit for pressure switching valve •Pressure switching valve •Fuel tank cracked, punctured or damaged •Charcoal canister is cracked, punctured or damaged •Fuel tank over fill check valve cracked or damaged •ECM
	During purge cut-off, pressure is very low compared with atmospheric pressure (2 trip detection logic)	
P0446	No rising in the fuel tank pressure when commanding the CCV open after an EVAP leak test	
	A high negative pressure (vacuum) does not occur in the system when commanding the EVAP VSV open with the CCV close	
P2418	No change in the fuel tank pressure when commanding the pressure switching valve for the check after the EVAP leak test	
	A high negative pressure (vacuum) does not occur in the system when commanding the EVAP VSV open and CCV close with the pressure switching valve open	

G02641845

Fig. 147: DTC P0441, P0446 & P2418 - DTC Detection Condition Chart
Courtesy of TOYOTA MOTOR SALES, U.S.A., INC.

HINT:

Typical DTC output of each trouble is shown below.

Trouble		Typical DTC output (*)
Small Leak		P0442 and/or P0456
Medium Leak (ex: vacuum hose loose)		P0455
Large Leak (ex: fuel tank cap loose)		P0441, P0446, P0455 and P2418
EVAP VSV	Open Malfunction	P0441
	Close Malfunction	P0441, P0442, P0446 and P2418
CCV	Open Malfunction	P0441, P0442, P0446 and P2418
	Close Malfunction	P0446
Pressure Switching	Open Malfunction	P2418
	Close Malfunction	P0441, P0442, P0455 and P2418

*: ECM may output some other DTCs combinations.

G02641846

Fig. 148: Evaporative Emissions Trouble DTC Output Chart
Courtesy of TOYOTA MOTOR SALES, U.S.A., INC.

MONITOR DESCRIPTION

P0441

The ECM checks for a "stuck closed" malfunction in the EVAP VSV by commanding the EVAP VSV to open with the CCV closed. If a high negative pressure is not developed in the fuel tank, the ECM determines that the

cardiagn.com

EVAP VSV remains closed. The ECM will turn on the MIL and set a DTC.

The ECM checks for EVAP VSV "stuck open" fault by commanding both the valves (EVAP VSV and CCV) to close when the fuel tank is at atmospheric pressure. If the fuel tank develops a high negative pressure at the early stage of this test, the ECM determines that the EVAP VSV is stuck open.

The ECM will turn on the MIL and set a DTC.

P0446

If a malfunction is detected in the EVAP VSV, the CCV and the VSV for bypass valve; the ECM will illuminate the MIL and set a DTC.

This portion of the EVAP diagnosis system checks the following EVAP system malfunctions:

a. CCV stuck closed:

   The ECM checks for a CCV "stuck closed" malfunction by commanding the CCV to open after an EVAP leak test. If the fuel tank pressure does not rise (lose vacuum), the ECM determines that the CCV is stuck closed. The ECM will turn on the MIL and set a DTC.

b. EVAP VSV (Purge line to intake manifold) stuck closed:

   The ECM checks for a "stuck closed" malfunction in the EVAP VSV by commanding EVAP VSV to open with the CCV closed. If a high negative pressure is not developed in the fuel tank, the ECM determines that the EVAP VSV remains closed. The ECM will turn on the MIL and set a DTC.

P2418

a. Pressure switching valve stuck open:

   The ECM checks for a pressure switching valve "stuck open" malfunction by commanding the pressure switching valve to close after an EVAP leak test. If the fuel tank pressure does not change, the ECM determines that the pressure switching valve is malfunctioning. The ECM will turn on the MIL and set a DTC.

   If EVAP VSV "stuck closed" malfunction is detected, the ECM will also store this DTC (P2418).

b. When EVAP VSV (Purge line to intake manifold) stuck closed is detected, the pressure switching valve malfunction DTC is also stored.

MONITOR STRATEGY

MONITOR STRATEGY

	P0441: EVAP VSV stuck open P0441: EVAP VSV stuck close P0442: EVAP leak (0.04 inch)

cardiagn.com

Related DTCs	P0446: CCV stuck open P0446: CCV stuck close P0455: EVAP gross leak P0456: EVAP leak (0.02 inch) P2418: Bypass VSV malfunction
Required sensors / components (Main)	Bypass VSV, CCV, EVAP canister, EVAP hose, Fuel cap, Fuel tank and EVAP VSV
Required sensors / components (Related)	ECT, FTP, IAT, MAF and VSS (Vehicle Speed Sensor)
Frequency of operation	Once per driving cycle
Duration	Within 60 sec.
MIL operation	2 driving cycles
Sequence of operation	None

TYPICAL ENABLING CONDITIONS

TYPICAL ENABLING CONDITIONS

The monitor will run whenever the following DTCs are not present	See **PRE-CHECK**
Battery voltage	11V
Altitude	7,870 ft. (2,400 m) or less
IAT	10 °C (50°F) or more
IAT at engine start	10 to 32°C (50 to 90°F)
ECT at engine start	10 to 32°C (50 to 90°F)
Difference between engine start IAT and engine start ECT	-7 to 11.1°C (-13 to 20°F)
Purge VSV, CCV and bypass VSV	No active test by scan tool
Time after engine start	5 sec. to 50 min.
Vehicle speed	Minimal change
Fuel slosh	No sloshing, i.e. fairly smooth road
MAF	No great change
FTP change	Minimal change
FTP	Less than -19.5 mmHg (-2.6 kPa) [Less than 740.5 mmHg]
Fuel tank level	Less than 90%
Number of "negative pressure introduction" in this driving cycles	Within 8 times

TYPICAL MALFUNCTION THRESHOLDS

EVAP VSV Stuck Closed (P0441):

TYPICAL MALFUNCTION THRESHOLDS (EVAP VSV STUCK CLOSED (P0441))

cardiagn.com

FTP change during "negative pressure introduction"	Less than 7 mmHg (0.933kPa)

EVAP VSV Stuck Open (P0441):

TYPICAL MALFUNCTION THRESHOLDS (EVAP VSV STUCK OPEN (P0441))

FTP 14 sec. after leak check	-28 mmHg (-3.73 kPa) [Less than 732 mmHg]

CCV Stuck Closed (P0446):

TYPICAL MALFUNCTION THRESHOLDS (CCV STUCK CLOSED (P0446))

FTP change when CCV is commanded to open after EVAP leak check	-4.5 to 4.5 mmHg (-0.6 to 0.6 kPa)

CCV Stuck Open (P0446):

TYPICAL MALFUNCTION THRESHOLDS (CCV STUCK OPEN (P0446))

Purge VSV stuck closed	Detected

Bypass VSV Malfunction (P2418):

TYPICAL MALFUNCTION THRESHOLDS (BYPASS VSV MALFUNCTION (P2418))

Either of the following conditions is met	
Purge VSV stuck closed	Detected
FTP change when bypass VSV is commanded to close after EVAP leak check	-4.5 to 4.5 mmHg (-0.6 to 0.6 kPa)

EVAP Leak (0.04 inch) (P0442):

TYPICAL MALFUNCTION THRESHOLDS (EVAP LEAK (0.04 INCH)(P0442)))

All of the following conditions are met:	
FTP increase for 5 sec. from -20 mmHg (-2.67 kPa) [740 mmHg]	More than 1.5 mmHg (0.2 kPa)
FTP increase for 5 sec. from -15 mmHg (-2 kPa) [745 mmHg]	More than 1.5 mmHg (0.2 kPa)
Minimum FTP after "negative pressure introduction"	Less than - 18 mmHg (-2.4 kPa) [More than 742 mmHg]

EVAP Leak (0.02 inch) (P0456):

TYPICAL MALFUNCTION THRESHOLDS (EVAP LEAK (0.02 INCH)(P0456)))

All of the following conditions are met:	
FTP increase for 5 sec. from -20 mmHg (-2.67 kPa) [740 mmHg]	More than 0.5 mmHg (0.67 kPa)
FTP increase for 5 sec. from -15 mmHg (-2 kPa) [745 mmHg]	More than 0.5 mmHg (0.67 kPa)

cardiagn.com

EVAP Gross Leak (P0455):

TYPICAL MALFUNCTION THRESHOLDS (EVAP GROSS LEAK (P0455))

All of the following conditions are met:	
FTP increase for 5 sec from -15 mmHg (-2 kPa) [745 mmHg]	More than 1.5 mmHg (0.2 kPa)

MONITOR RESULT

Refer to **PRE-CHECK** for detailed information.

EVAP VSV Stuck Close:

MONITOR RESULT (EVAP VSV STUCK CLOSE)

TEST ID	Description of TEST DATA	Conversion Factor	Unit	Standard Value
$02/$81	FTP change "during negative pressure introduction"*	Multiply by 0.09156	mmHg	Malfunction thresholds

CCV Stuck Close:

MONITOR RESULT (CCV STUCK CLOSE)

TEST ID	Description of TEST DATA	Conversion Factor	Unit	Standard Value
$02/$85	FTP change when CCV is commanded to open after EVAP leak check	Multiply by 0.0458 minus 2.930 mmHg	mmHg	Malfunction thresholds

Bypass VSV Malfunction:

MONITOR RESULT (BYPASS VSV MALFUNCTION)

TEST ID	Description of TEST DATA	Conversion Factor	Unit	Standard Value
$02/ $86	FTP change when bypass VSV is commanded to close after EVAP leak check	Multiply by 0.0458 minus 2.930 mmHg	mmHg	Malfunction thresholds

EVAP Leak (0.04 inch) and EVAP Gross Leak:

MONITOR RESULT (EVAP LEAK (0.04 INCH) AND EVAP GROSS LEAK)

TEST ID	Description of TEST DATA	Conversion Factor	Unit	Standard Value
$02/$04	FTP increase after negative pressure introduction*	Multiply by 0.0458	mmHg	Malfunction thresholds

EVAP Leak (0.02 inch):

MONITOR RESULT (EVAP LEAK (0.02 INCH))

cardiagn.com

TEST ID	Description of TEST DATA	Conversion Factor	Unit	Standard Value
$02/$05	FTP increase after "negative pressure introduction"*	Multiply by 0.0458	mmHg	Malfunction thresholds

HINT:

*: The ECM operates the actuators as the following chart when the EVAP system is being monitored.

EVAP SYSTEM CONDITION AND EVAP VSV CCV BYPASS VSV POSITION

EVAP System Condition	EVAP VSV	CCV	Bypass VSV	EVAP (FTP) Pressure
Before "negative pressure introduction"	Closed (OFF)	Open (OFF)	Closed (OFF)	Positive
During "negative pressure introduction	Open (ON)	Closed (ON)	Open (ON)	Intake manifold pressure is being applied to EVAP system
After "negative pressure introduction" CCV testing	Closed (OFF)	Open (OFF)	Open (ON)	Negative
After "negative pressure introduction" Bypass VSV testing	Closed (OFF)	Open (OFF)	Closed (OFF)	Negative

WIRING DIAGRAM

cardiagn.com

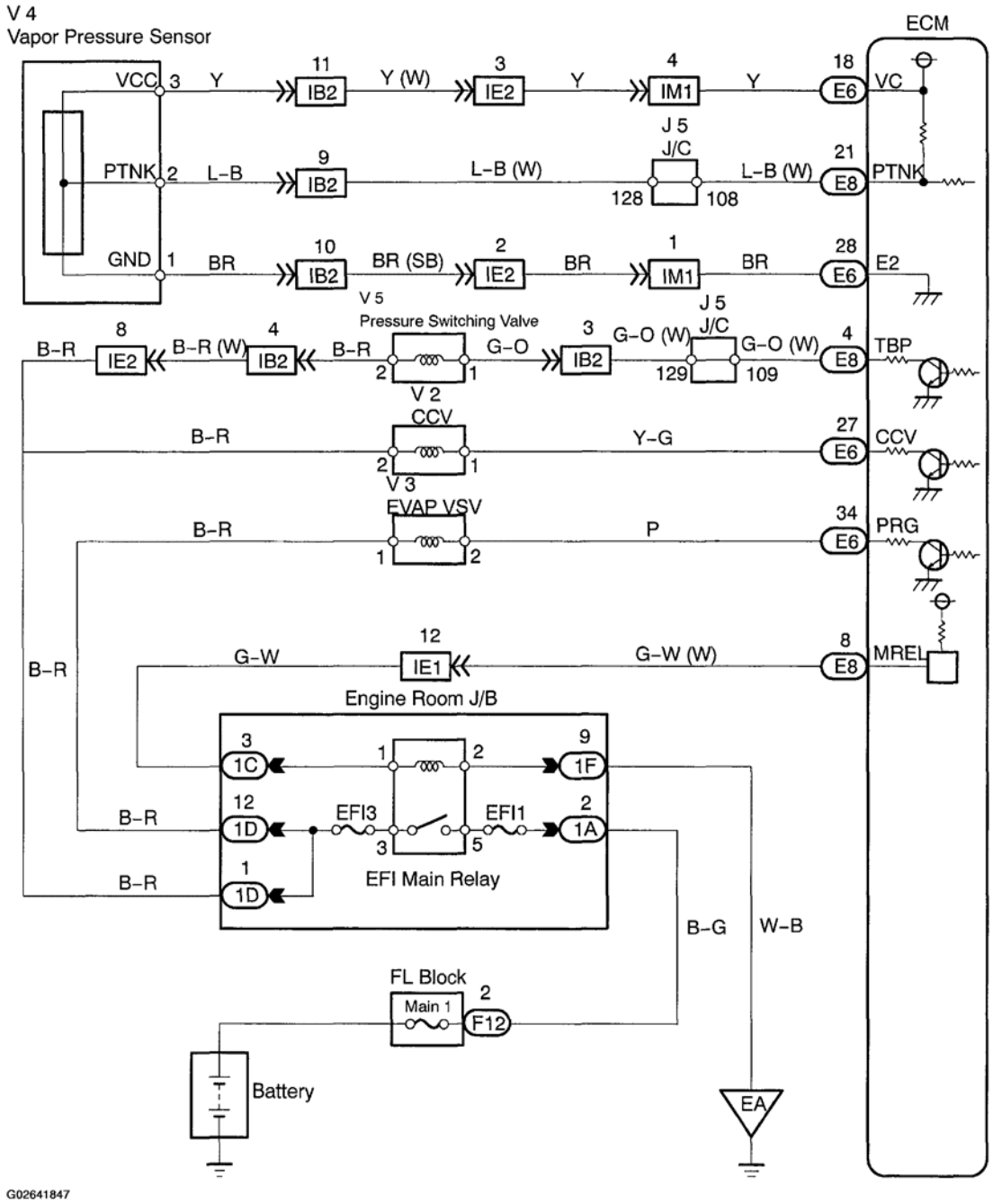

Fig. 149: Wiring Diagram - Evaporative Emission Control System Circuit
Courtesy of TOYOTA MOTOR SALES, U.S.A., INC.

INSPECTION PROCEDURE

HINT:

- If DTC P0441 (Purge Flow), P0446 (CCV), P2418 (Pressure Switching Valve) or P0451 (Evaporative

cardiagn.com

Pressure Sensor) is output with DTC P0442, P0455 or P0456, first troubleshoot DTC P0441, P0446 or P0451. If no malfunction is detected, troubleshoot DTC P0442, P0455 or P0456 next.

- Read freeze frame data using the hand-held tester or the OBD II scan tool. Freeze frame data records the engine conditions when a malfunction is detected. When troubleshooting, freeze frame data can help determine if the vehicle was running or stopped, if the engine was warmed up or not, if the air-fuel ratio was lean or rich, and other data from the time the malfunction occurred.
- When the ENGINE RUN TIME in the freeze frame data is less than 200 seconds, carefully check the vapor pressure sensor.

Hand-held tester:

1. **Check that fuel tank cap meets OEM specification.**

   NG: Replace it with a cap that meets OEM specification.

   OK: Go To Next Step.
2. **Check that fuel tank cap is correctly installed.**

   NG: Correctly install fuel tank cap.

   OK: Go To Next Step.
3. **Check fuel tank cap (see INSPECTION).**

   NG: Replace fuel tank cap.

   OK: Go To Next Step.
4. **Check filler neck for damage.**

   PREPARATION:

   Remove the fuel tank cap.

   CHECK:

   Visually check the filler neck for damage.

   Reinstall the fuel tank cap.

   NG: Replace filler pipe.

   OK: Go To Next Step.
5. **Check purge flow.**

   PREPARATION:

   a. Connect the hand-held tester to the DLC3.
   b. Enter the following menus: DIAGNOSIS / ENHANCED OBD II / ACTIVE TEST mode on the hand-held tester.
   c. Disconnect the EVAP VSV vacuum hose from the charcoal canister.
   d. Start the engine.

cardiagn.com

e. Select the item EVAP VSV (ALON) / ALL in the ACTIVE TEST and operate the EVAP VSV (press the right or left button).

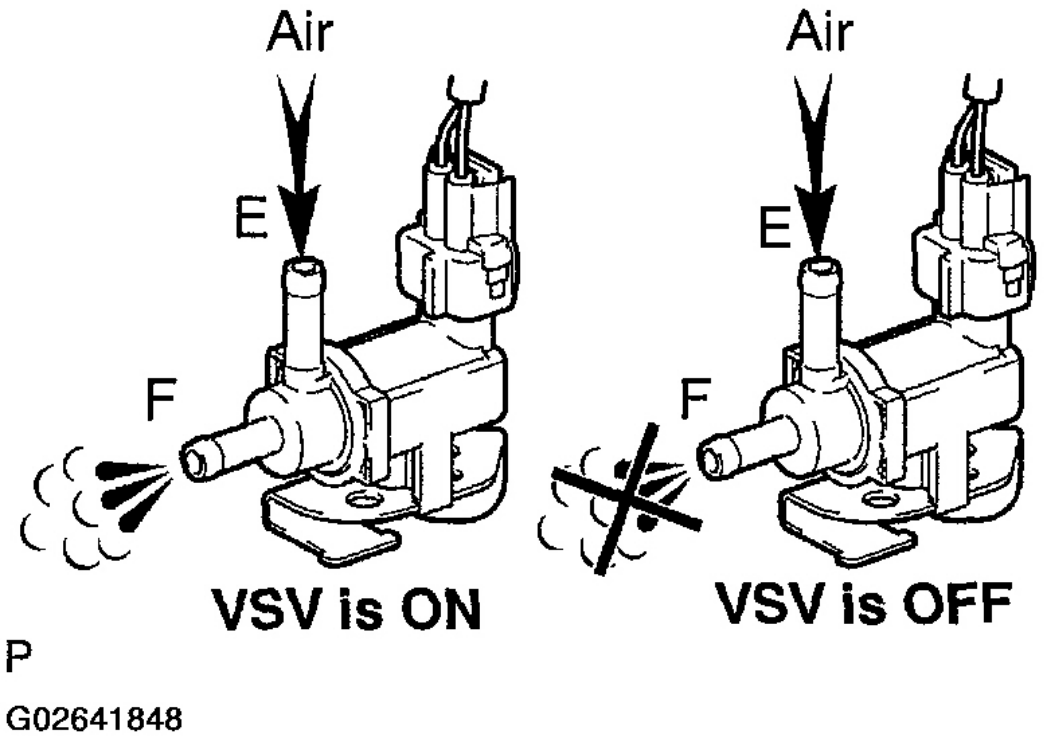

Fig. 150: Checking Purge Flow
Courtesy of TOYOTA MOTOR SALES, U.S.A., INC.

CHECK:

When the EVAP VSV is operated by the hand-held tester, check whether the disconnected hose applies suction to your finger.

OK:

VSV is ON:

Disconnected hose applies suction to your finger.

VSV is OFF:

Disconnected hose applies no suction to your finger.

cardiagn.com

OK: Go to step 9.

NG: Go To Next Step.

6. **Check vacuum hose between intake manifold and EVAP VSV, and EVAP VSV and charcoal canister.**

   CHECK:

   a. Check that the vacuum hose is connected correctly.
   b. Check the vacuum hose for looseness and disconnection.
   c. Check the vacuum hose for cracks, puncture, damage and blockage.

   NG: Repair or replace vacuum hose.

   OK: Go To Next Step.

7. **Check operation of EVAP VSV (see INSPECTION).**

   NG: Replace EVAP VSV.

   OK: Go To Next Step.

8. **Check for open and short in wire harness between EFI main relay and EVAP VSV, and EVAP VSV and ECM (see HOW TO USE THE DIAGNOSTIC CHART AND INSPECTION PROCEDURE).**

   NG: Repair or replace harness and connector.

   OK: Replace ECM (see ENGINE CONTROL MODULE (ECM)).

9. **Check CCV.**

   PREPARATION:

   a. Disconnect the CCV vacuum hose from the charcoal canister.
   b. Turn ON the ignition switch. Push the hand-held tester main switch.
   c. Enter the following menus: DIAGNOSIS / ENHANCED OBD II / ACTIVE TEST mode on the hand-held tester.
   d. Select the item CAN CTRL VSV / ALL in the ACTIVE TEST and operate the CAN CTRL VSV (press the right or left button).

cardiagn.com

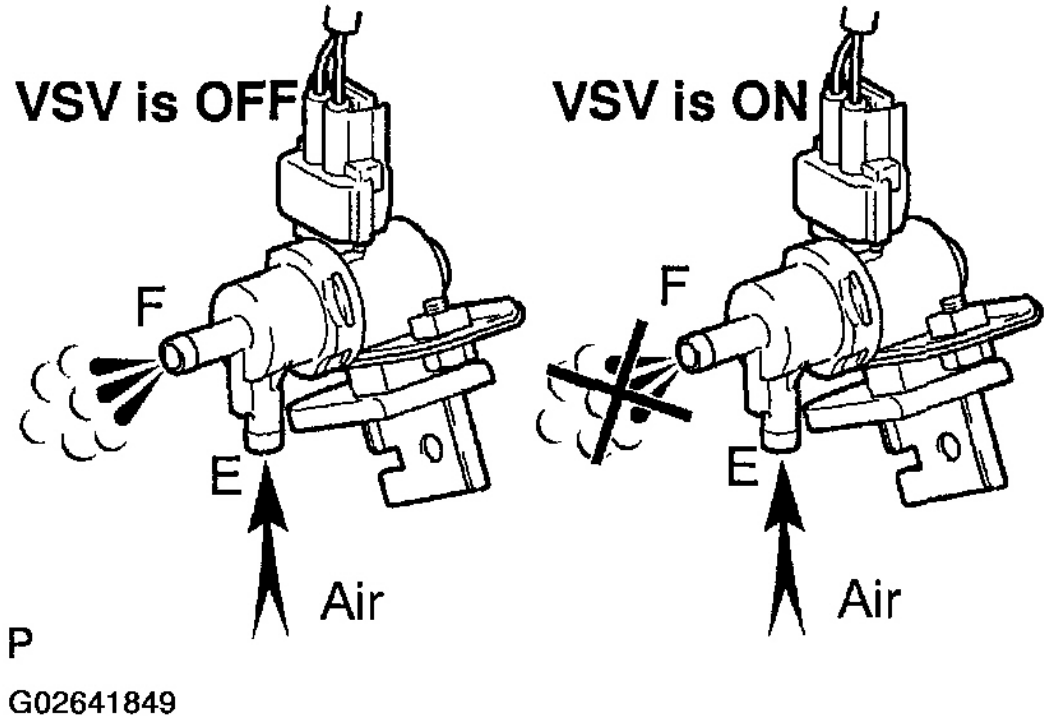

Fig. 151: Checking CCV
Courtesy of TOYOTA MOTOR SALES, U.S.A., INC.

CHECK:

When the VSV is operated by the hand-held tester, check whether or not air flows from port E to F.

OK:

VSV is ON:

Air does not flow from port E to port F.

VSV is OFF:

Air from port E flows out through port F.

OK: Go to step 13.
NG: Go To Next Step.

10. **Check vacuum hose between CCV and charcoal canister.**

cardiagn.com

CHECK:

a. Check that the vacuum hose is connected correctly.
b. Check the vacuum hose for looseness and disconnection.
c. Check the vacuum hose for cracks, puncture, damage and blockage.

NG: Repair or replace vacuum hose.

OK: Go To Next Step.

11. **Check operation of CCV (see INSPECTION).**

NG: Replace CCV.

OK: Go To Next Step.

12. **Check for open and short in wire harness between EFI main relay and CCV, and CCV and ECM (see HOW TO USE THE DIAGNOSTIC CHART AND INSPECTION PROCEDURE).**

NG: Repair or replace harness and connector.

OK: Replace ECM (see ENGINE CONTROL MODULE (ECM)).

13. **Check pressure switching valve.**

PREPARATION:

a. Turn ON the ignition switch. Push the hand-held tester main switch.
b. Enter the following menus: DIAGNOSIS / ENHANCED OBD II / ACTIVE TEST mode on the hand-held tester.
c. Select the item TANK BYPASS VSV / ALL in the ACTIVE TEST and operate the TANK BYPASS VSV (press the right or left button).

cardiagn.com

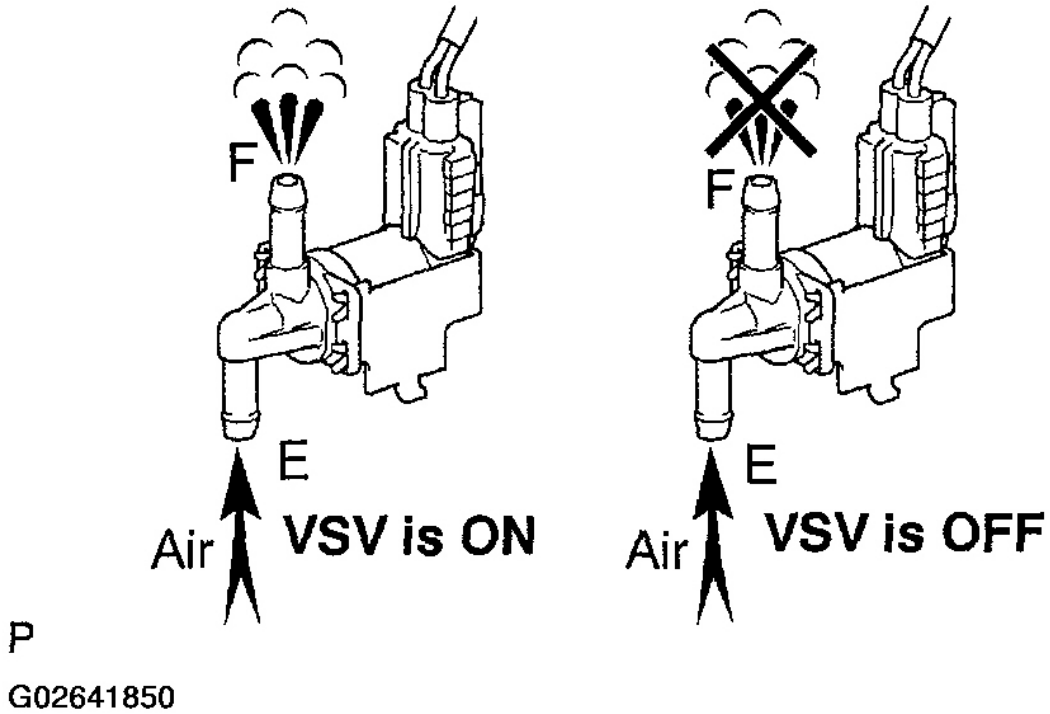

Fig. 152: Checking Pressure Switching Valve
Courtesy of TOYOTA MOTOR SALES, U.S.A., INC.

CHECK:

When the VSV is operated by the hand-held tester, check whether or not air flows from port E to F.

OK:

VSV is ON:

Air from port E flows out through port F.

VSV is OFF:

Air does not flow from port E to port F.

OK: Go to step 16.
NG: Go To Next Step.

14. **Check operation of pressure switching valve (see INSPECTION).**
NG: Replace pressure switching valve.

cardiagn.com

OK: Go To Next Step.

15. **Check for open and short in wire harness between EFI main relay and pressure switching valve, and pressure switching valve and ECM (see HOW TO USE THE DIAGNOSTIC CHART AND INSPECTION PROCEDURE).**

    NG: Repair or replace harness and connector.

    OK: Replace ECM (see ENGINE CONTROL MODULE (ECM)).

16. **Check whether hose close to fuel tank has been modified, and whether there are signs of any accident near fuel tank.**

    CHECK:

    Check the following parts for cracks, deformation and loose connection:

    - Fuel tank
    - Fuel tank filler pipe
    - Hoses and tubes around fuel tank

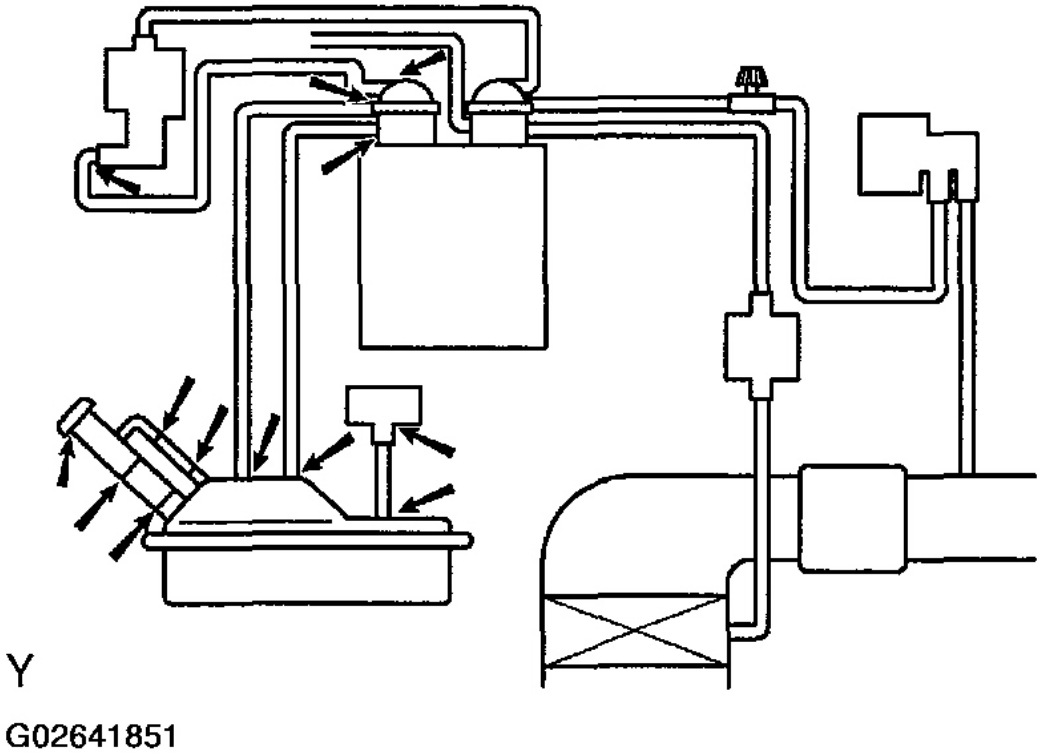

Fig. 153: Identifying Fuel Tank Filler Pipe Hoses & Tubes
Courtesy of TOYOTA MOTOR SALES, U.S.A., INC.

cardiagn.com

NG: Repair or replace evaporative emission leak part.

OK: Go To Next Step.

17. **Check vacuum hoses between vapor pressure sensor and fuel tank, and charcoal canister and VSV for pressure switching valve.**

CHECK:

a. Check that the vacuum hose is connected correctly.
b. Check the vacuum hose for looseness and disconnection.
c. Check the vacuum hose for cracks, puncture and damage.

NG: Repair or replace vacuum hose.

OK: Go To Next Step.

18. **Check hose and tube between fuel tank and charcoal canister.**

CHECK:

a. Check the connection between the fuel tank and fuel EVAP pipe, fuel EVAP pipe and under-floor fuel tube, and under-floor fuel tube and charcoal canister.
b. Check the hose and tube for cracks, puncture and damage.

NG: Repair or replace hose and tube.

OK: Go To Next Step.

19. **Check voltage between terminals VC and E2 of ECM connector.**

CHECK:

a. Remove the glove compartment (see **ENGINE CONTROL MODULE (ECM)**).
b. Turn the ignition switch ON.

CHECK:

Measure the voltage between terminals VC and E2 of the ECM connector.

OK:

Voltage: 4.5 to 5.5 V

cardiagn.com

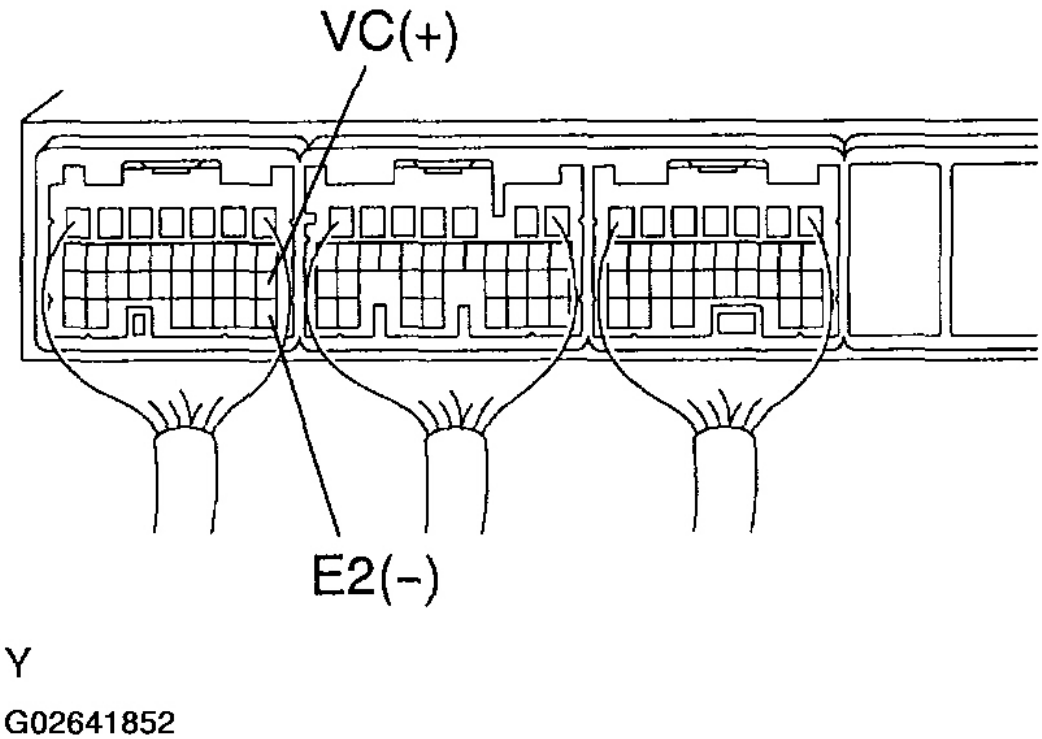

Fig. 154: Identifying Terminals VC & E2 Of ECM Connector
Courtesy of TOYOTA MOTOR SALES, U.S.A., INC.

NG: Replace ECM (see ENGINE CONTROL MODULE (ECM)).

OK: Go To Next Step.

20. **Check voltage between terminals PTNK and E2 of ECM connectors.**

PREPARATION:

a. Remove the glove compartment (see **ENGINE CONTROL MODULE (ECM)**).
b. Turn the ignition switch ON.

CHECK:

Measure the voltage between terminals PTNK and E2 of the ECM connectors.

1. Disconnect the vacuum hose from the vapor pressure sensor.
2. Using the MITYVAC (hand-held vacuum pump), apply a vacuum of 4.0 kPa (30 mmHg, 1.18 in.Hg) to the vapor pressure sensor.

cardiagn.com

NOTE: **The vacuum applied to the vapor pressure sensor must be less than 66.7 kPa (500 mmHg, 19.7 in.Hg).**

OK:

1. **Voltage: 2.9 to 3.7 V**
2. **Voltage: 0.5 V or less**

cardiagn.com

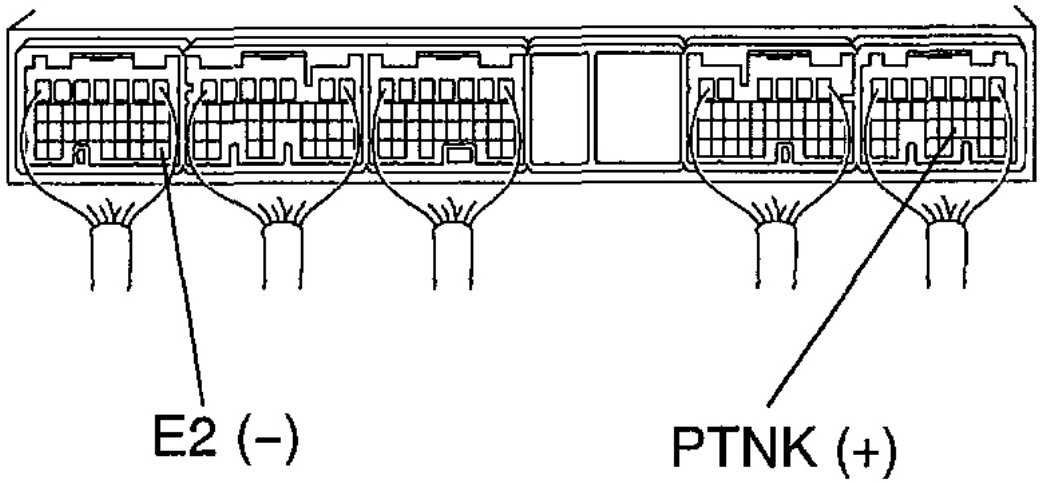

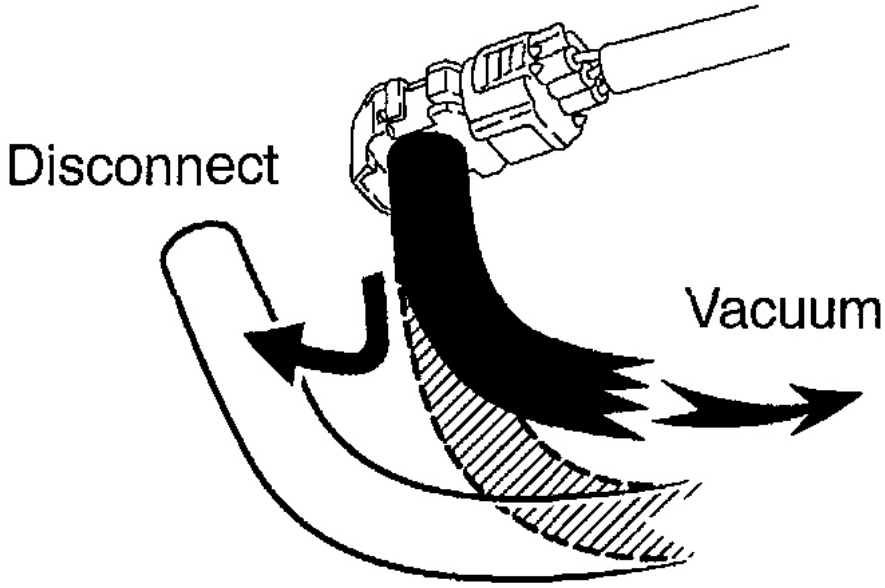

Fig. 155: Disconnecting Vacuum Hose From Vapor Pressure Sensor
Courtesy of TOYOTA MOTOR SALES, U.S.A., INC.

OK: Go to step 22.

cardiagn.com

NG: Go To Next Step.

21. **Check for open and short in wire harness between vapor pressure sensor and ECM (see HOW TO USE THE DIAGNOSTIC CHART AND INSPECTION PROCEDURE).**

    NG: Repair or replace harness and connector.

    OK: Replace ECM (see ENGINE CONTROL MODULE (ECM)).

22. **Check fuel tank over fill check valve.**

    NG: Replace fuel tank over fill check valve.

    OK: Go To Next Step.

23. **Check fuel tank.**

    NG: Replace fuel tank.

    OK: Go To Next Step.

24. **Check charcoal canister for cracks and damage.**

    NG: Replace charcoal canister.

    OK: Replace ECM (see ENGINE CONTROL MODULE (ECM)).

OBD II scan tool (excluding hand-held tester):

1. **Check that fuel tank cap meets OEM specification.**

   NG: Replace it with a cap that meets OEM specification.

   OK: Go To Next Step.

2. **Check that fuel tank cap is correctly installed.**

   NG: Correctly install fuel tank cap.

   OK: Go To Next Step.

3. **Check fuel tank cap (see INSPECTION).**

   NG: Replace fuel tank cap.

   OK: Go To Next Step.

4. **Check filler neck for damage.**

   PREPARATION:

   Remove the fuel tank cap.

   CHECK:

   Visually check the filler neck for damage.

   NG: Replace filler pipe.

   OK: Go To Next Step.

5. **Check whether hose close to fuel tank has been modified, and whether there are signs of any accident near fuel tank or charcoal canister.**

cardiagn.com

CHECK:

Check the following parts for cracks, deformation and loose connection:

- Fuel tank
- Charcoal canister
- Fuel tank filler pipe
- Hoses and tubes around fuel tank and charcoal canister

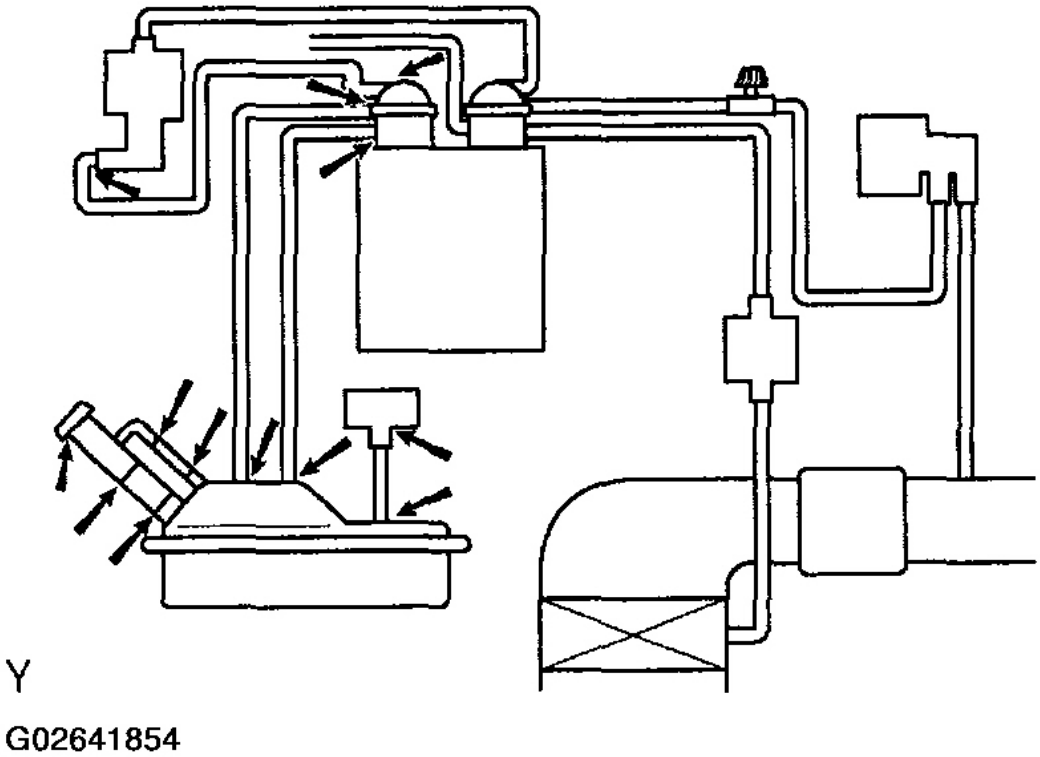

Fig. 156: Identifying Hoses & Tubes Around Fuel Tank & Charcoal Canister
Courtesy of TOYOTA MOTOR SALES, U.S.A., INC.

NG: Repair or replace evaporative emissions leak part.

OK: Go To Next Step.

6. **Check vacuum hoses between vapor pressure sensor and fuel tank, charcoal canister and pressure switching valve, and pressure switching valve and charcoal canister.**

CHECK:

cardiagn.com

a. Check that the vacuum hose is connected correctly.
b. Check the vacuum hose for looseness and disconnection.
c. Check the vacuum hose for cracks, puncture and damage.

NG: Repair or replace vacuum hose.

OK: Go To Next Step.

7. **Check hose and tube between fuel tank and charcoal canister.**

CHECK:

a. Check the connection between the fuel tank and fuel EVAP pipe, fuel EVAP pipe and under-floor fuel tube and under-floor fuel tube and charcoal canister.
b. Check the hose and tube for cracks, hole and damage.

NG: Repair or replace hose and tube.

OK: Go To Next Step.

8. **Check vacuum hoses ((5), (6), (7), (8) and (9) in Fig. 1 in circuit description).**

CHECK:

a. Check that the vacuum hose is connected correctly.
b. Check the vacuum hose for looseness and disconnection.
c. Check the vacuum hose for cracks, puncture, damage, and blockage.

NG: Repair or replace vacuum hose.

OK: Go To Next Step.

9. **Check EVAP VSV connector, CCV connector, pressure switching valve connector and vapor pressure sensor connector for looseness and disconnection.**

NG: Repair or connect VSV or sensor connector.

OK: Go To Next Step.

10. **Check charcoal canister (cracks, puncture and damage).**

NG: Check and replace charcoal canister.

OK: Go To Next Step.

11. **Check voltage between terminals VC and E2 of ECM connector.**

CHECK:

a. Remove the glove compartment (see **ENGINE CONTROL MODULE (ECM)**).
b. Turn the ignition switch ON.

CHECK:

Measure the voltage between terminals VC and E2 of the ECM connector.

cardiagn.com

OK:

Voltage: 4.5 to 5.5 V

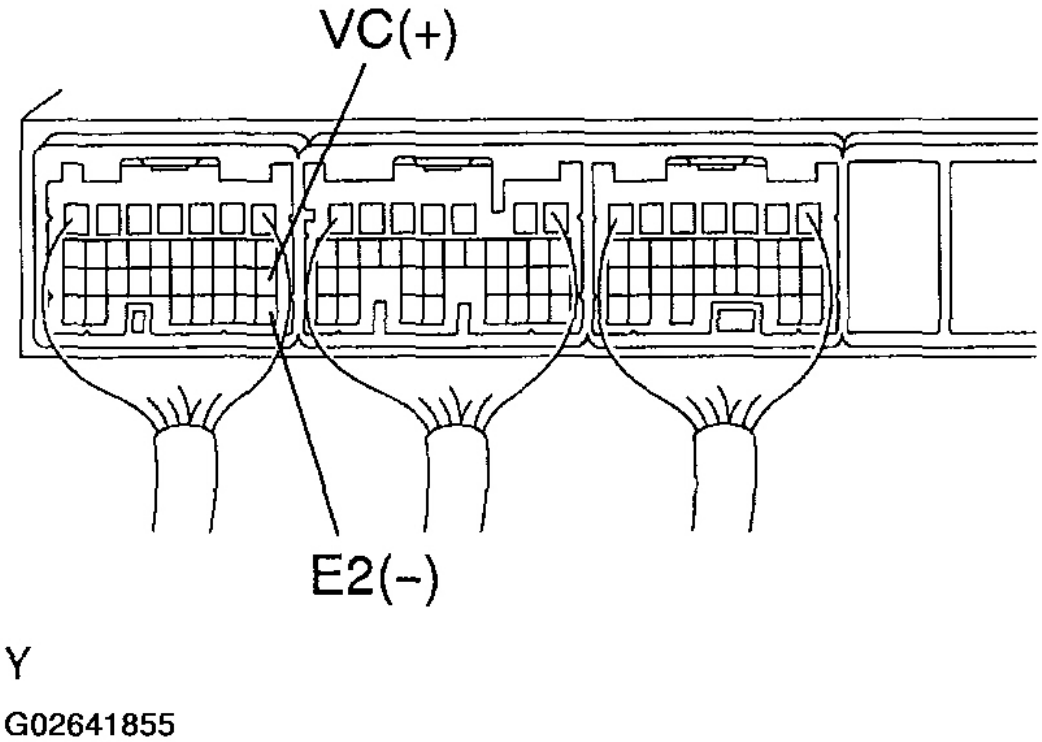

Fig. 157: Identifying Terminals VC & E2 Of ECM Connector
Courtesy of TOYOTA MOTOR SALES, U.S.A., INC.

NG: Replace ECM (see ENGINE CONTROL MODULE (ECM)).
OK: Go To Next Step.

12. **Check voltage between terminals PTNK and E2 of ECM connectors.**

PREPARATION:

a. Remove the glove compartment (see **ENGINE CONTROL MODULE (ECM)**).
b. Turn the ignition switch ON.

CHECK:

Measure the voltage between terminals PTNK and E2 of the ECM connectors.

cardiagn.com

1. Disconnect the vacuum hose from the vapor pressure sensor.
2. Using the MITYVAC (hand-held vacuum pump), apply a vacuum of 4.0 kPa (30 mmHg, 1.18 in.Hg) to the vapor pressure sensor.

NOTE: The vacuum applied to the vapor pressure sensor must be less than 66.7 kPa (500 mmHg, 19.7 in.Hg).

OK:

1. **Voltage: 2.9 to 3.7 V**
2. **Voltage: 0.5 V or less**

cardiagn.com

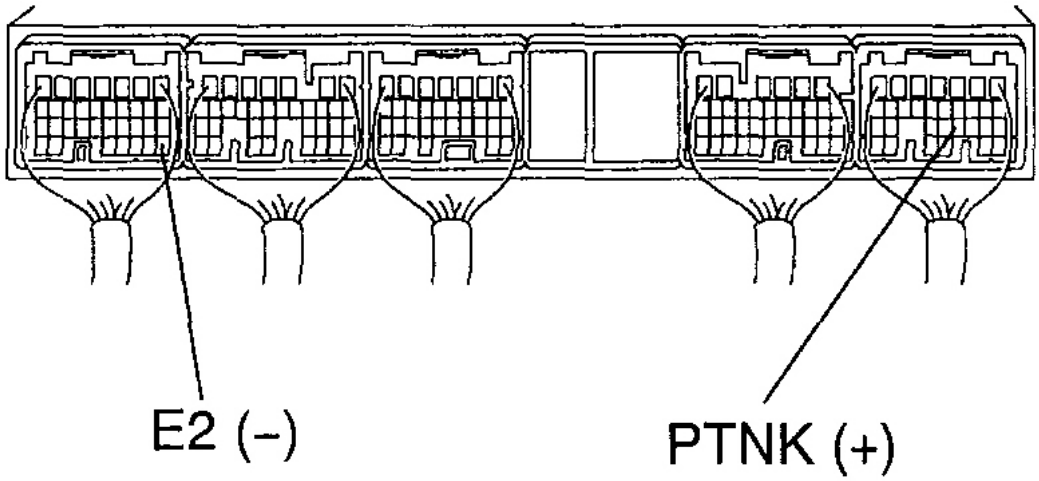

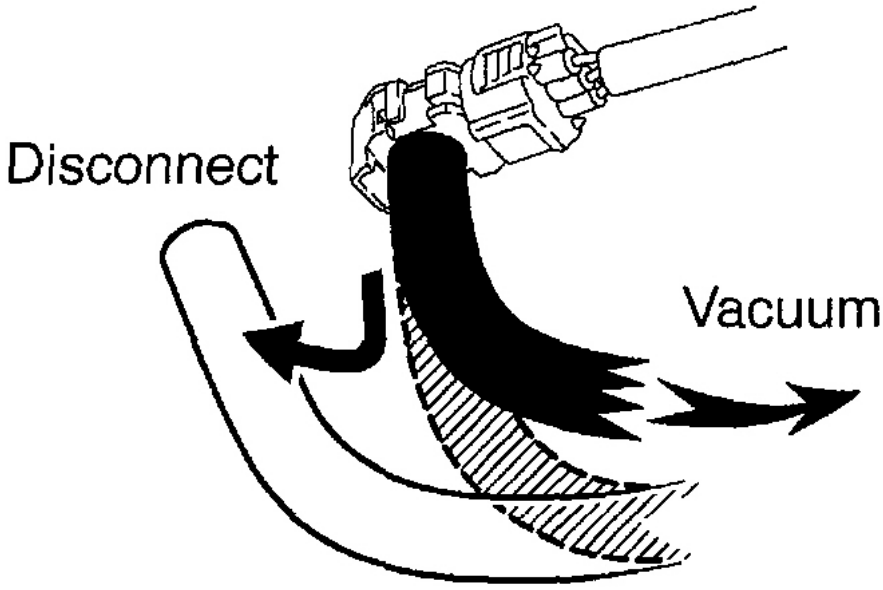

Fig. 158: Disconnecting Vacuum Hose From Vapor Pressure Sensor
Courtesy of TOYOTA MOTOR SALES, U.S.A., INC.

OK: Go to step 14.

cardiagn.com

NG: Go To Next Step.

13. **Check for open and short in wire harness between vapor pressure sensor and ECM (See HOW TO USE THE DIAGNOSTIC CHART AND INSPECTION PROCEDURE).**

    NG: Repair or replace harness and connector.

    OK: Replace vapor pressure sensor.

14. **Check EVAP VSV.**

PREPARATION:

a. Remove the glove compartment (see **ENGINE CONTROL MODULE (ECM)**).
b. Turn the ignition switch ON.

CHECK:

Check the VSV function.

1. Connect terminal PRG of the ECM connector and body ground (ON).
2. Disconnect terminal PRG from the body ground (OFF).

OK:

1. **VSV is ON:**

   Air from port E flows out through port F.

2. **VSV is OFF:**

   Air does not flow from port E to port F.

cardiagn.com

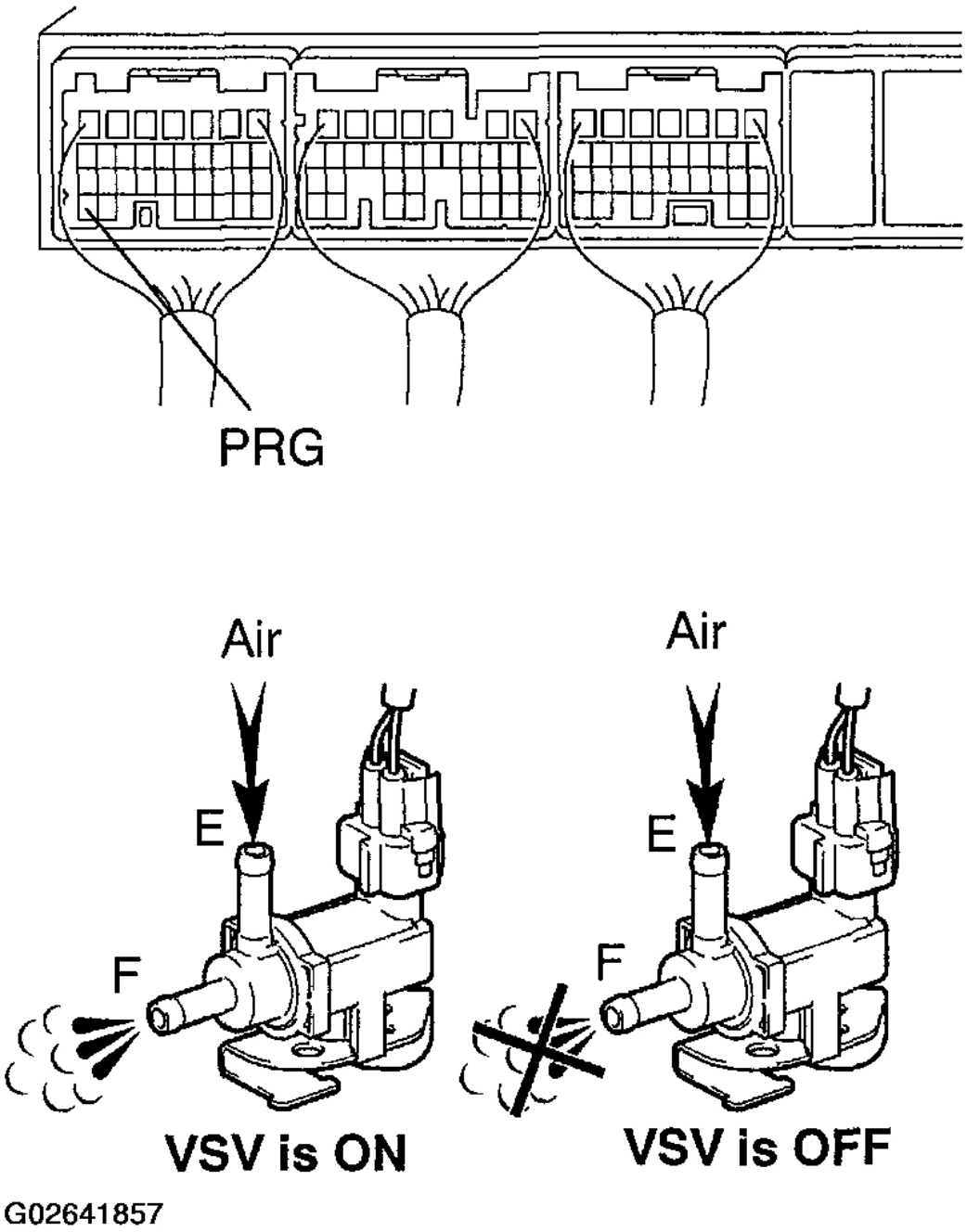

Fig. 159: Checking EVAP VSV
Courtesy of TOYOTA MOTOR SALES, U.S.A., INC.

OK: Go to step 17.

NG: Go To Next Step.

cardiagn.com

15. **Check operation of EVAP VSV (see INSPECTION).**

    NG: Replace EVAP VSV.

    OK: Go To Next Step.

16. **Check for open and short in wire harness between EFI main relay and EVAP VSV, and EVAP VSV and ECM (see HOW TO USE THE DIAGNOSTIC CHART AND INSPECTION PROCEDURE).**

    NG: Repair or replace harness and connector.

    OK: Replace ECM (see ENGINE CONTROL MODULE (ECM)).

17. **Check CCV.**

    PREPARATION:

    a. Remove the glove compartment (see **ENGINE CONTROL MODULE (ECM)**).
    b. Turn the ignition switch ON.

    CHECK:

    Check the VSV function.

    1. Connect terminal CCV of the ECM connector and body ground (ON).
    2. Disconnect terminal CCV from the body ground (OFF).

    OK:

    VSV is ON:

    Air does not flow from port E to port F.

    VSV is OFF:

    Air from port E flows out through port F.

cardiagn.com

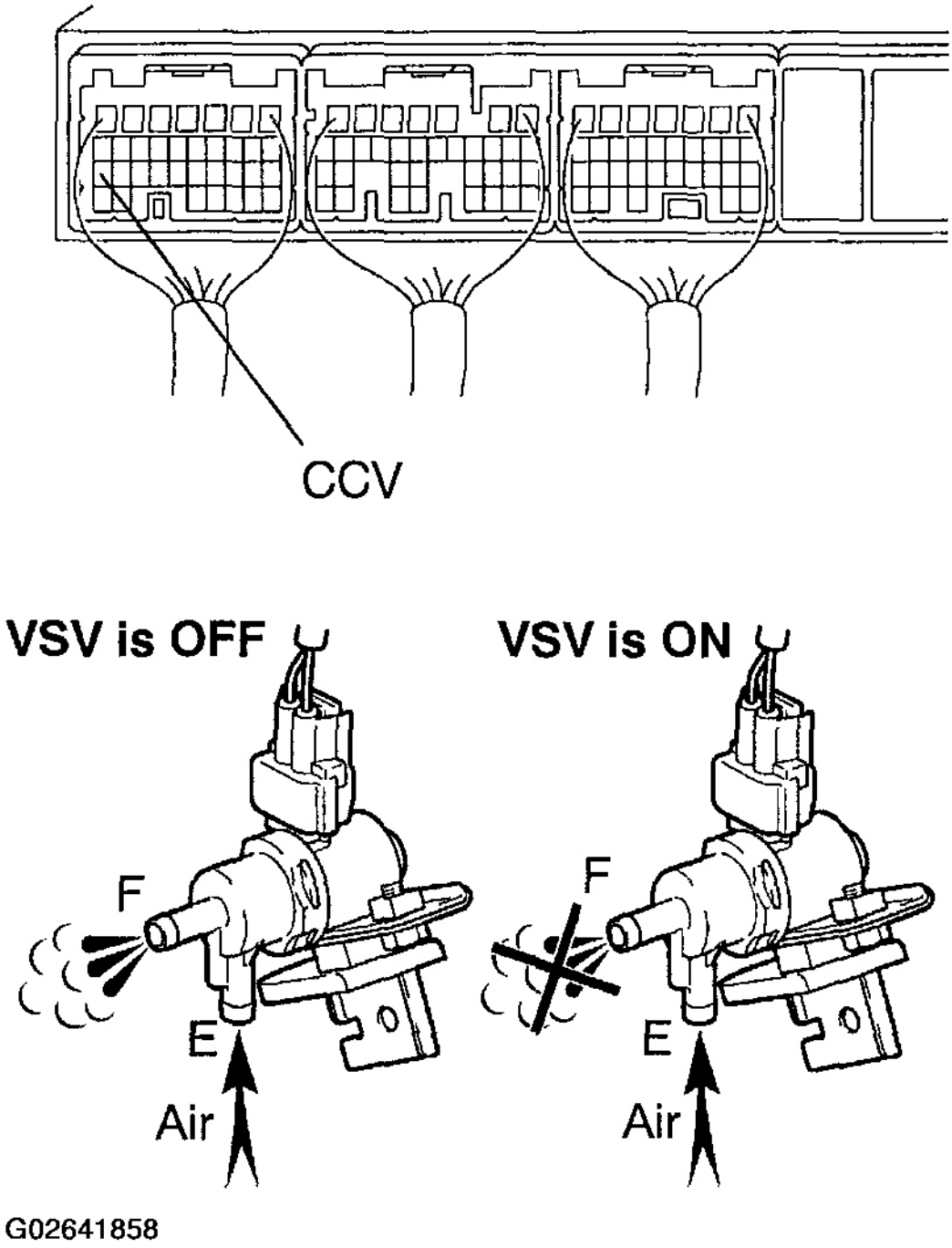

Fig. 160: Checking CCV
Courtesy of TOYOTA MOTOR SALES, U.S.A., INC.

OK: Go to step 20.

cardiagn.com

NG: Go To Next Step.

18. **Check operation of CCV (see INSPECTION).**

    NG: Replace CCV.

    OK: Go To Next Step.

19. **Check for open and short in wire harness between EFI main relay and CCV, and CCV and ECM (see HOW TO USE THE DIAGNOSTIC CHART AND INSPECTION PROCEDURE).**

    NG: Repair or replace harness and connector.

    OK: Replace ECM (see ENGINE CONTROL MODULE (ECM)).

20. **Check pressure switching valve.**

PREPARATION:

a. Remove the glove compartment (see **ENGINE CONTROL MODULE (ECM)**).
b. Turn the ignition switch ON.

CHECK:

Check the VSV function.

1. Connect terminal TBP of the ECM connector and body ground (ON).
2. Disconnect terminal TBP from the body ground (OFF).

OK:

1. **VSV is ON:**

   Air from port E flows out through port F.

2. **(2)VSV is OFF:**

   Air does not flow from port E to port F.

cardiagn.com

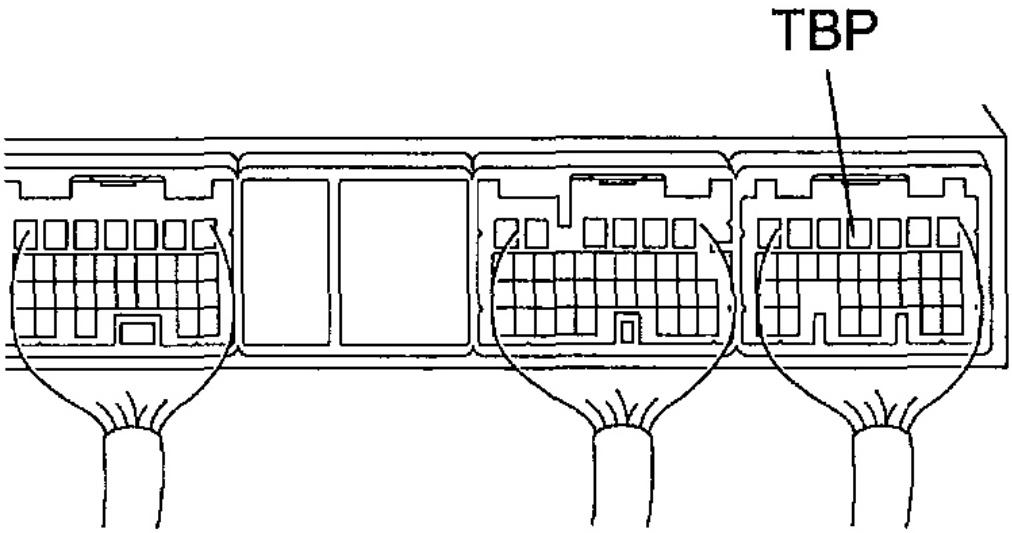

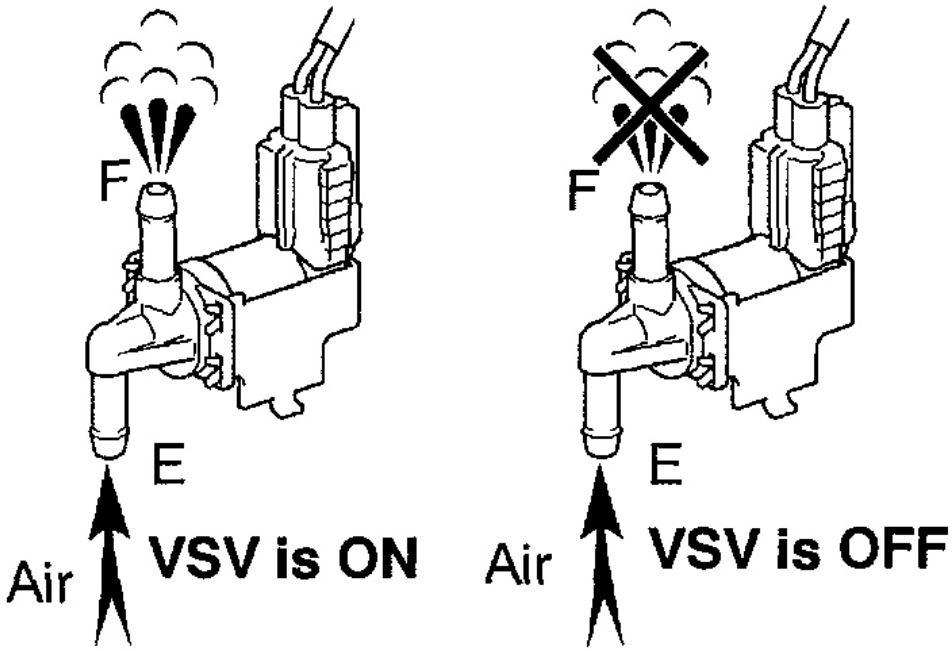

G02641859

cardiagn.com

Fig. 161: Checking Pressure Switching Valve
Courtesy of TOYOTA MOTOR SALES, U.S.A., INC.

OK: Go to step 23.

NG: Go To Next Step.

21. **Check operation of pressure switching valve (see INSPECTION).**

    NG: Replace pressure switching valve.

    OK: Go To Next Step.

22. **Check for open and short in harness and connector between EFI main relay and pressure switching valve, and pressure switching valve and ECM (see HOW TO USE THE DIAGNOSTIC CHART AND INSPECTION PROCEDURE).**

    NG: Repair or replace harness or connector.

    OK: Replace ECM (see ENGINE CONTROL MODULE (ECM)).

23. **Check the fuel tank over fill check valve (see INSPECTION).**

    NG: Replace fuel tank over fill check valve or fuel tank.

    OK: Go To Next Step.

24. **Check fuel tank (see INSPECTION).**

    NG: Replace fuel tank.

    OK: It is likely that vehicle user did not properly close fuel tank cap.

DTC P0442, P0455, P0456: EVAPORATIVE EMISSION CONTROL SYSTEM LEAK DETECTED (SMALL LEAK/GROSS LEAK/VERY SMALL LEAK)

CIRCUIT DESCRIPTION

The vapor pressure sensor, CCV and Pressure switching valve are used to detect abnormalities in the evaporative emission control system.

The ECM decides whether there is an abnormality in the evaporative emission control system based on the vapor pressure sensor signal.

DTC P0442, P0455 or P0456 is recorded in the ECM when evaporative emissions leak from the components within the dotted line in Fig. 1 below, or when the vapor pressure sensor malfunctions.

cardiagn.com

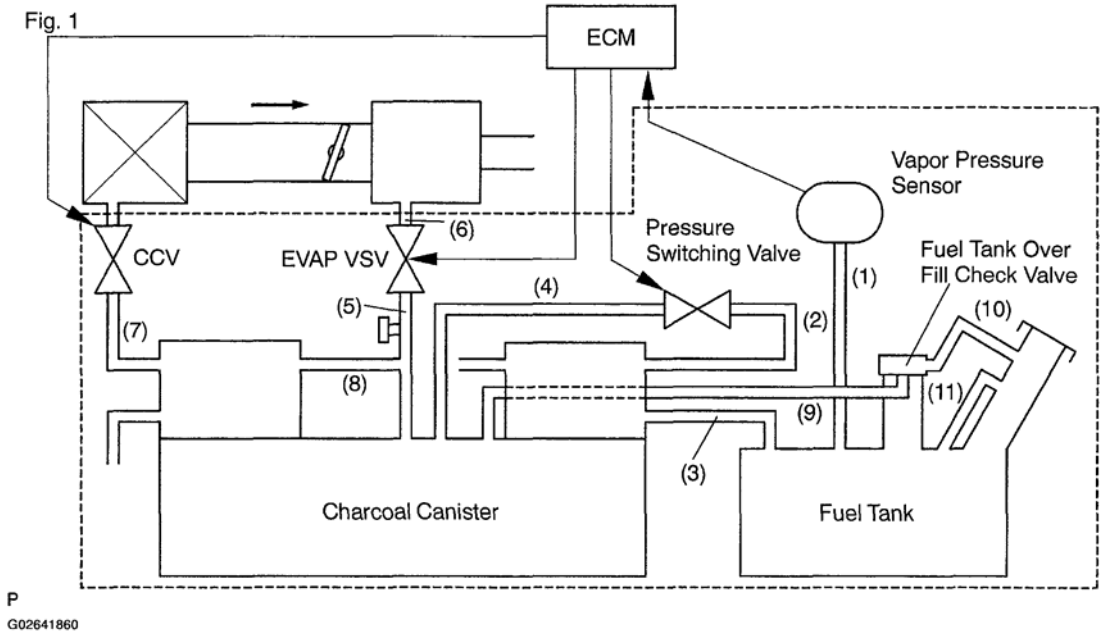

Fig. 162: System Diagram - Evaporative Emission Control System (1 Of 2)
Courtesy of TOYOTA MOTOR SALES, U.S.A., INC.

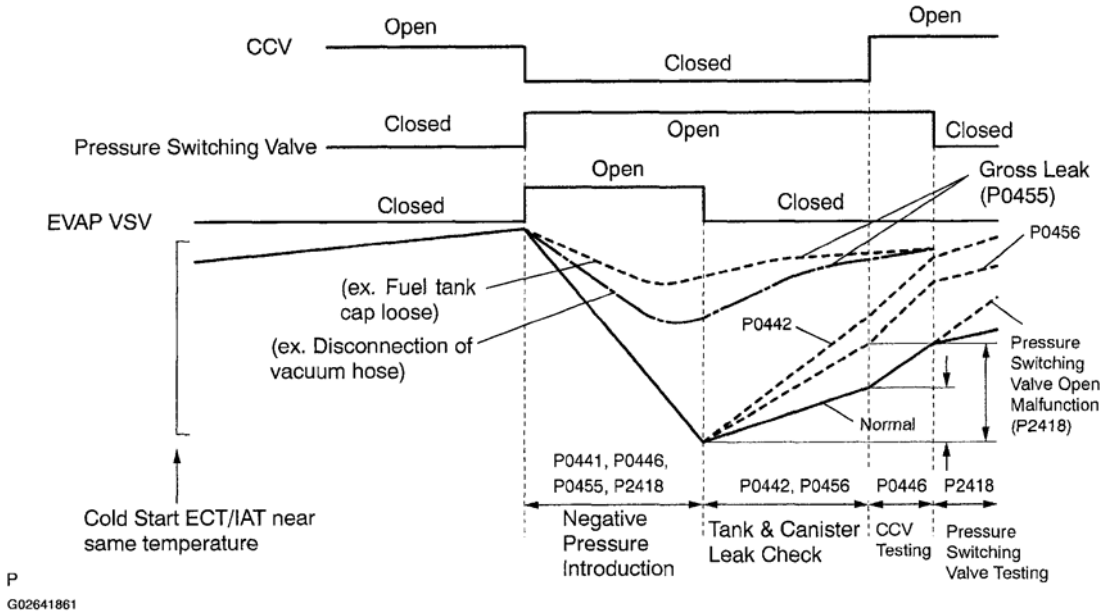

Fig. 163: System Diagram - Evaporative Emission Control System (2 Of 2)
Courtesy of TOYOTA MOTOR SALES, U.S.A., INC.

HINT:

cardiagn.com

Refer to **DTC P0441, P0446, P2418: EVAPORATIVE EMISSION CONTROL SYSTEM INCORRECT PURGE FLOW/VENT CONTROL CIRCUIT/VALVE CONTROL CIRCUIT/OPEN**.

DTC No.	DTC Detection Condition	Trouble Area
P0442	After negative pressure introduction has been completed, if pressure in EVAP system sharply increases.	• Hose or tube cracked, puncture, damaged or loose seal ((3) or (9) in Fig. 1) • Fuel tank cap incorrectly installed • Fuel tank cap cracked or damaged • Vacuum hose cracked, punctured, blocked, damaged or disconnected ("1,2,4,5,6,7,8,10 and 11" in Fig. 1 in the circuit description) • Fuel tank cracked, punctured or damaged • Charcoal canister cracked, punctured or damaged • Open or short in vapor pressure sensor circuit • Vapor pressure sensor • Fuel tank over fill check valve cracked or damaged • ECM
P0455	When negative pressure introduction fuel tank pressure does not decrease in −3.4 kPa (−26 mmHg, −1.00 in.Hg) or less.	
P0456	If pressure in EVAP system slightly increase while ECM performs leak check.	

G02641862

Fig. 164: DTC P0442, P0455 & P0456 - DTC Detection Condition Chart
Courtesy of TOYOTA MOTOR SALES, U.S.A., INC.

HINT:

Typical DTC output of each trouble is shown below.

Trouble		Typical DTC output (*)
Small Leak		P0442 and/or P0456
Medium Leak (ex: Vacuum hose loose)		P0455
Large Leak (ex: Fuel tank cap loose)		P0441, P0446, P0455 and P2418
EVAP VSV	Open Malfunction	P0441
	Close Malfunction	P0441, P0446, P0455 and P2418
CCV	Open Malfunction	P0441, P0446, P0455 and P2418
	Close Malfunction	P0446
Pressure Switching Valve	Open Malfunction	P2418
	Close Malfunction	P0441, P0446, P0455 and P2418

*: ECM may output some other DTC combinations.

G02641863

Fig. 165: Evaporative Emissions DTC Output Chart
Courtesy of TOYOTA MOTOR SALES, U.S.A., INC.

MONITOR DESCRIPTION

A leak in the evaporative emission system directs the ECM to set DTC P0442, P0455 or P0456.

The ECM checks for leaks in the system by introducing a high negative pressure (vacuum) from the intake manifold by commanding the EVAP VSV to open while the CCV (vent) is closed. After sufficient time has elapsed, the fuel tank should have developed a high negative pressure (vacuum) and the EVAP VSV should be closed. The ECM then monitors the pressure-rise (loss of vacuum) in the fuel tank. If the pressure rises too

cardiagn.com

rapidly, the ECM concludes that the system has a leak. The ECM will turn on the MIL and set a DTC.

The ECM sets the following DTCs for small and large leaks:

1. DTC P0442 is set when the internal fuel tank pressure has a large increase and the EVAP system has a small leak.
2. DTC P0455 is set when the EVAP system has a very large leak. Even though the ECM sends a signal to the EVAP VSV (when CCV is closed) to create a vacuum, the internal fuel tank pressure does not decrease beyond a specified level.
3. DTC P0456 is set when the internal fuel tank pressure increases slightly and the EVAP system has a small leak.

MONITOR STRATEGY

MONITOR STRATEGY

Related DTCs	P0441: EVAP VSV stuck open Related DTCs P0441: EVAP VSV stuck close P0442: EVAP leak (0.04 inch) Related DTCs P0446: CCV stuck open P0446: CCV stuck close P0455: EVAP gross leak P0456: EVAP leak (0.02 inch) P2418: Bypass VSV malfunction
Required sensors / components (Main)	Bypass VSV, CCV, EVAP canister, EVAP hose, Fuel cap, Fuel tank and EVAP VSV
Required sensors / components (Related)	ECT, FTP, IAT, MAF and VSS (Vehicle Speed Sensor)
Frequency of operation	Once per driving cycle
Duration	Within 60 seconds
MIL operation	2 driving cycles
Sequence of operation	None

TYPICAL ENABLING CONDITIONS

TYPICAL ENABLING CONDITIONS

The monitor will run whenever the following DTCs are not present	See **PRE-CHECK**
Battery voltage	11 V
Altitude	7,870 ft. (2,400 m) or less
IAT	10 °C (50°F) or more
IAT at engine start	10 to 32°C (50 to 90°F)
ECT at engine start	10 to 32°C (50 to 90°F)

cardiagn.com

Difference between engine start IAT and engine start ECT	-7 to 11.1°C (-13 to 20°F)
Purge VSV, CCV and bypass VSV	No active test by scan tool
Time after engine start	5 sec. to 50 min.
Vehicle speed	Minimal change
Fuel slosh	No sloshing, i.e. fairly smooth road
MAF	No great change
FTP change	Minimal change
FTP	Less than - 19.5 mmHg (-2.6 kPa) [Less than 740.5 mmHg]

TYPICAL ENABLING CONDITIONS

Fuel tank level	Less than 90 %
Number of "negative pressure introduction" in this driving cycles	Within 8 times

TYPICAL MALFUNCTION THRESHOLDS

EVAP VSV Stuck Close (P0441):

TYPICAL MALFUNCTION THRESHOLDS (EVAP VSV STUCK CLOSE (P0441))

FTP change during "negative pressure introduction"	Less than 7 mmHg (0.933 kPa)

EVAP VSV Stuck Open (P0441):

TYPICAL MALFUNCTION THRESHOLDS (EVAP VSV STUCK OPEN (P0441))

FTP at 14 sec. after leak check	-28 mmHg (-3.73 kPa) [Less than 732 mmHg]

CCV Stuck Close (P0446):

TYPICAL MALFUNCTION THRESHOLDS (CCV STUCK CLOSE (P0446))

FTP change when CCV is commanded to open after EVAP leak check	-4.5 to 4.5 mmHg (-0.6 to 0.6 kPa)

CCV Stuck Open (P0446):

TYPICAL MALFUNCTION THRESHOLDS (CCV STUCK OPEN (P0446))

Purge VSV stuck close	Detected

Bypass VSV Malfunction (P2418):

TYPICAL MALFUNCTION THRESHOLDS (BYPASS VSV MALFUNCTION (P2418))

FTP change when bypass VSV is commanded to close after EVAP leak check	-4.5 to 4.5 mmHg (-0.6 to 0.6 kPa)

cardiagn.com

EVAP Leak (0.04 inch) (P0442):

TYPICAL MALFUNCTION THRESHOLDS (EVAP LEAK (0.04 INCH) (P0442)))

All of the following conditions are met:	
FTP increase for 5 sec. from -20 mmHg (-2.67 kPa) [740 mmHg]	More than 1.5 mmHg (0.2 kPa)
FTP increase for 5 sec. from -15 mmHg (-2 kPa) [745 mmHg	More than 1.5 mmHg (0.2 kPa)
Minimum FTP after "negative pressure introduction"	Less than -18 mmHg (-2.4 kPa) [More than 742 mmHg]

EVAP Leak (0.02 inch) (P0456):

TYPICAL MALFUNCTION THRESHOLDS (EVAP LEAK (0.02 INCH) (P0456))

All of the following conditions are met:	
FTP increase for 5 sec. from -20 mmHg (-2.67 kPa) [740 mmHg	More than 0.5 mmHg (0.67 kPa)
FTP increase for 5 sec. from -15 mmHg (-2 kPa) [745 mmHg	More than 0.5 mmHg (0.67 kPa)

EVAP Gross Leak (P0455):

TYPICAL MALFUNCTION THRESHOLDS (EVAP GROSS LEAK (P0455))

All of the following conditions are met:	
FTP increase for 5 sec. from -15 mmHg (-2 kPa) [745 mmHg	More than 1.5 mmHg (0.2 kPa)

MONITOR RESULT

Refer to **PRE-CHECK** for detailed information.

EVAP VSV Stuck Close:

MONITOR RESULT (EVAP VSV STUCK CLOSE)

TEST ID	Description of TEST DATA	Conversion Factor	Unit	Description of TEST LIMIT
$02/$81	FTP change "during negative pressure introduction"*	Multiply by 0.09156	mmHg	Malfunction thresholds

CCV Stuck Close:

MONITOR RESULT (CCV STUCK CLOSE)

TEST ID	Description of TEST DATA	Conversion Factor	Unit	Description of TEST LIMIT
$02/ $85	FTP change when CCV is commanded to open after EVAP leak check	Multiply by 0.0458 minus 2.930 mmHg	mmHg	Malfunction thresholds

cardiagn.com

Bypass VSV Malfunction:

MONITOR RESULT (BYPASS VSV MALFUNCTION)

TEST ID	Description of TEST DATA	Conversion Factor	Unit	Description of TEST LIMIT
$02/ $86	FTP change when bypass VSV is commanded to close after EVAP leak check	Multiply by 0.0458 minus 2.930 mmHg	mmHg	Malfunction thresholds

EVAP Leak (0.04 inch) and EVAP Gross Leak:

MONITOR RESULT (EVAP LEAK (0.04 INCH) AND EVAP GROSS LEAK)

TEST ID	Description of TEST DATA	Conversion Factor	Unit	Description of TEST LIMIT
$02/$04	FTP increase after negative pressure introduction*	Multiply by 0.0458	mmHg	Malfunction thresholds

EVAP Leak (0.02 inch):

MONITOR RESULT (EVAP LEAK (0.02 INCH))

TEST ID	Description of TEST DATA	Conversion Factor	Unit	Description of TEST LIMIT
$02/$05	FTP increase after negative pressure Introduction*	Multiply by 0.0458	mmHg	Malfunction thresholds

HINT:

* The ECM operates the actuators as the following chart when the EVAP system is being monitored.

EVAP SYSTEM CONDITION AND EVAP VSV CCV BYPASS VSV POSITION

EVAP System Condition	EVAP VSV	CCV	Bypass VSV	EVAP (FTP) Pressure
Before "negative pressure introduction"	Closed (OFF)	Open (OFF)	Closed (OFF)	Positive
During "negative pressure introduction"	Open (ON)	Closed (ON)	Open (ON)	Intake manifold pressure is being applied to EVAP system
After "negative pressure introduction"	Closed (OFF)	Open (OFF)	Open (ON)	Negative

WIRING DIAGRAM

Refer to wiring diagram under **DTC P0441, P0446, P2418: EVAPORATIVE EMISSION CONTROL SYSTEM INCORRECT PURGE FLOW/VENT CONTROL CIRCUIT/VALVE CONTROL CIRCUIT/OPEN** .

cardiagn.com

DTC P0442, P0455, P0456: EVAPORATIVE EMISSION CONTROL SYSTEM LEAK DETECTED (SMALL LEAK/GROSS LEAK/VERY SMALL LEAK)

CONFIRMATION READINESS TEST

First Trip Procedure

a. The vehicle must be cold, and ambient temperature is between approximately 10°C (50°F) and 35°C (95°F).
b. Intake Air Temperature (IAT) and Engine Coolant Temperature (ECT) sensors indicate almost the same value.
c. Clear DTCs.
    - Disconnect the battery terminals or EFI fuse for more than 60 seconds.
    - READINESS TESTS will show INCMPL (incomplete).
d. Drive the vehicle on a freeway. Write down the state of READINESS TESTS. They will change to COMPL as the evaluation monitors operate and if the system passes. This procedure may take approximately 20 minutes or more.

cardiagn.com

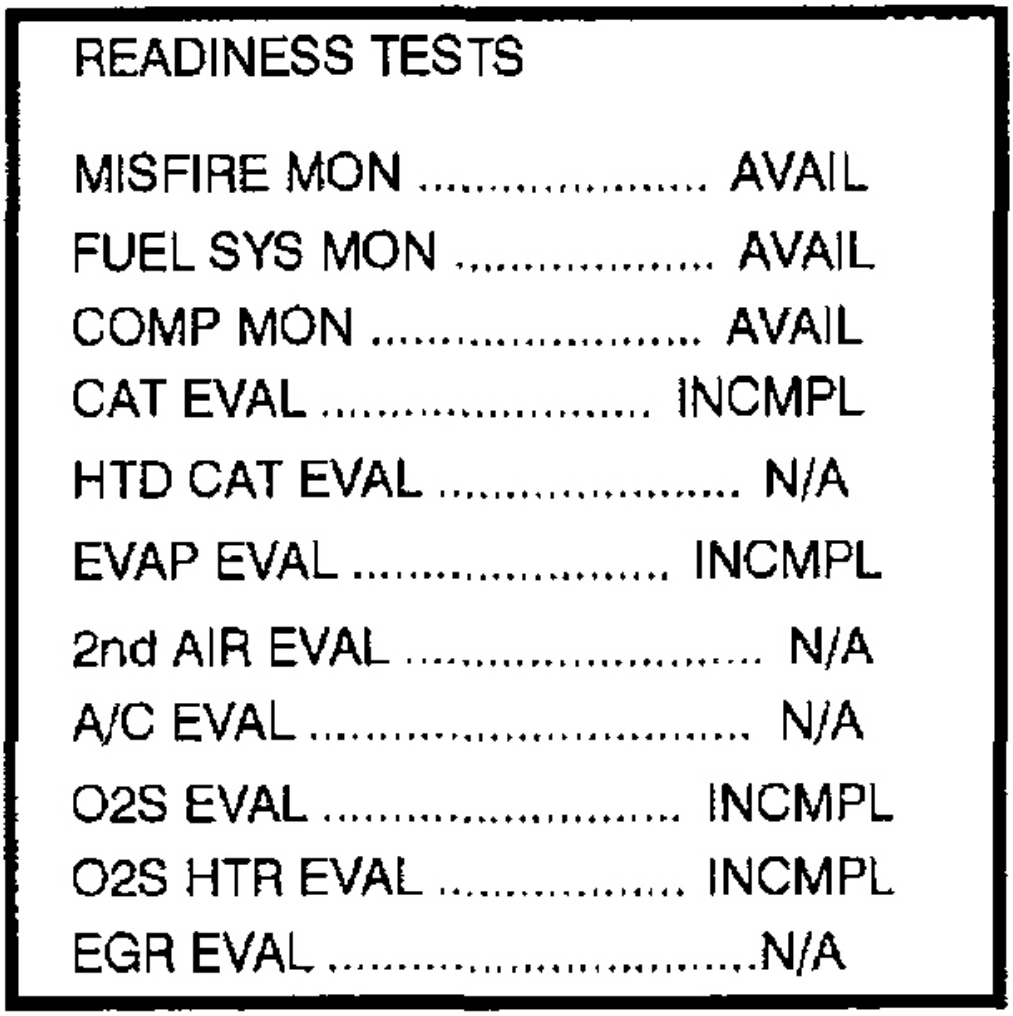

G02641864

Fig. 166: Display Readiness Test Screen (1 Of 2)
Courtesy of TOYOTA MOTOR SALES, U.S.A., INC.

NOTE: Do not shut off the engine - the results will be invalid.

Pass Condition - No Problem Found by the ECM

If the EVAP evaluation monitor shows COMPL, go to the NON-CONTINUOUS TESTS screen.

cardiagn.com

NOTE: **Do not shut off the engine - the results will be invalid.**

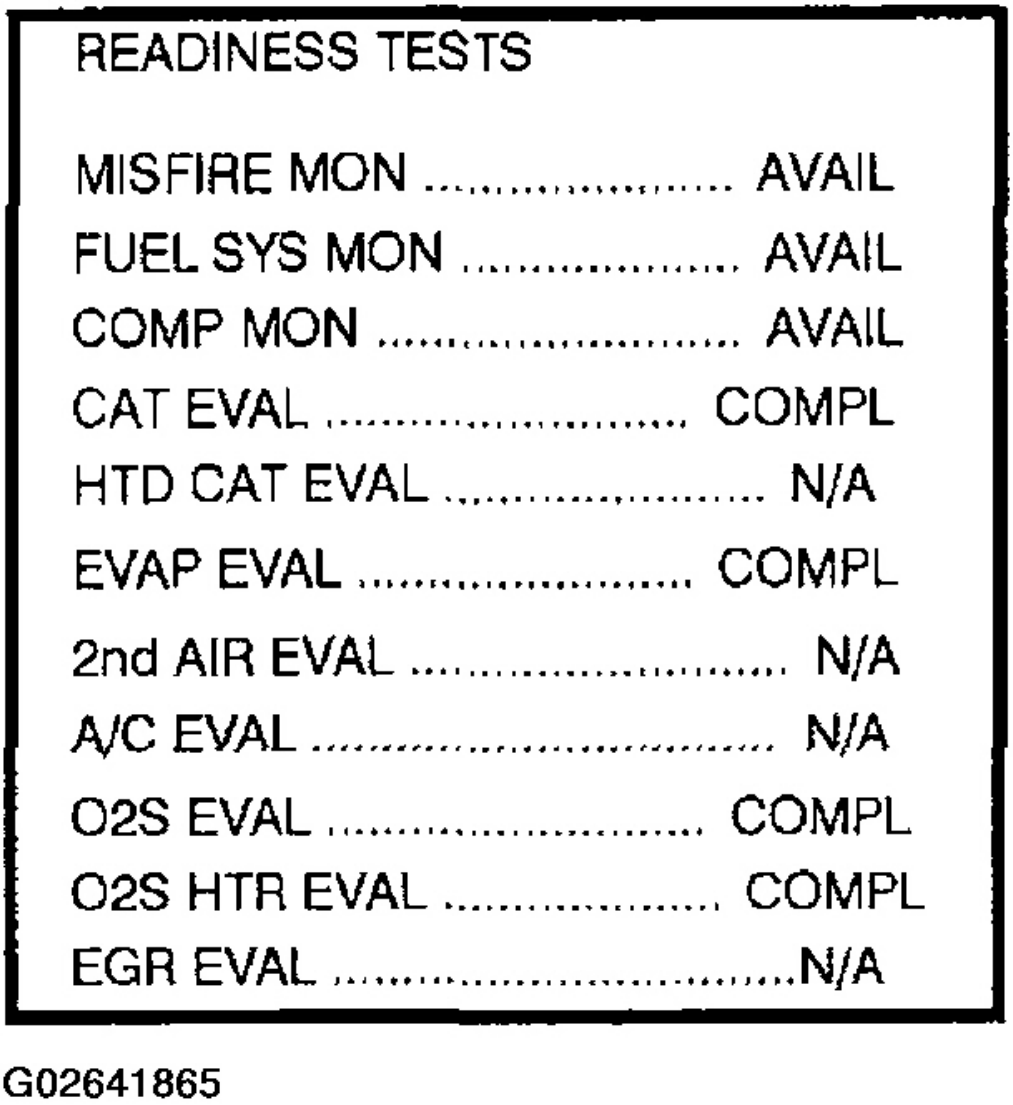

Fig. 167: Display Readiness Test Screen (2 Of 2)
Courtesy of TOYOTA MOTOR SALES, U.S.A., INC.

- To get there, go to Advanced OBD II, On board Tests, NON-CONTINUOUS TESTS.
- If all of the tests in the time $02 category Tests show "Pass", the evaluation monitor has operated and no problem was detected.

cardiagn.com

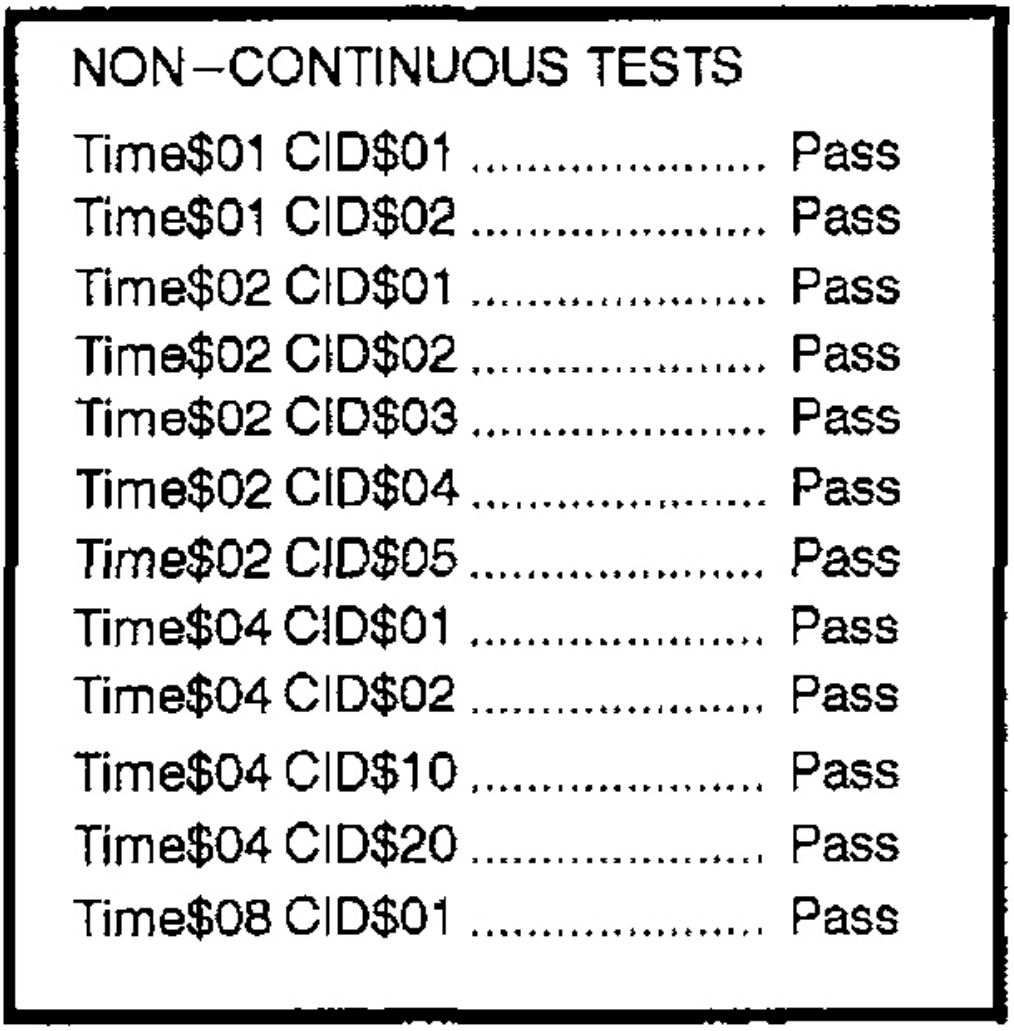

G02641866

Fig. 168: Display Non-Continuous Tests Screen
Courtesy of TOYOTA MOTOR SALES, U.S.A., INC.

Fail Condition - Problem Detected in the ECM

If the EVAP evaluation monitor shows INCMPL, go to the NON-CONTINUOUS TESTS screen.

cardiagn.com

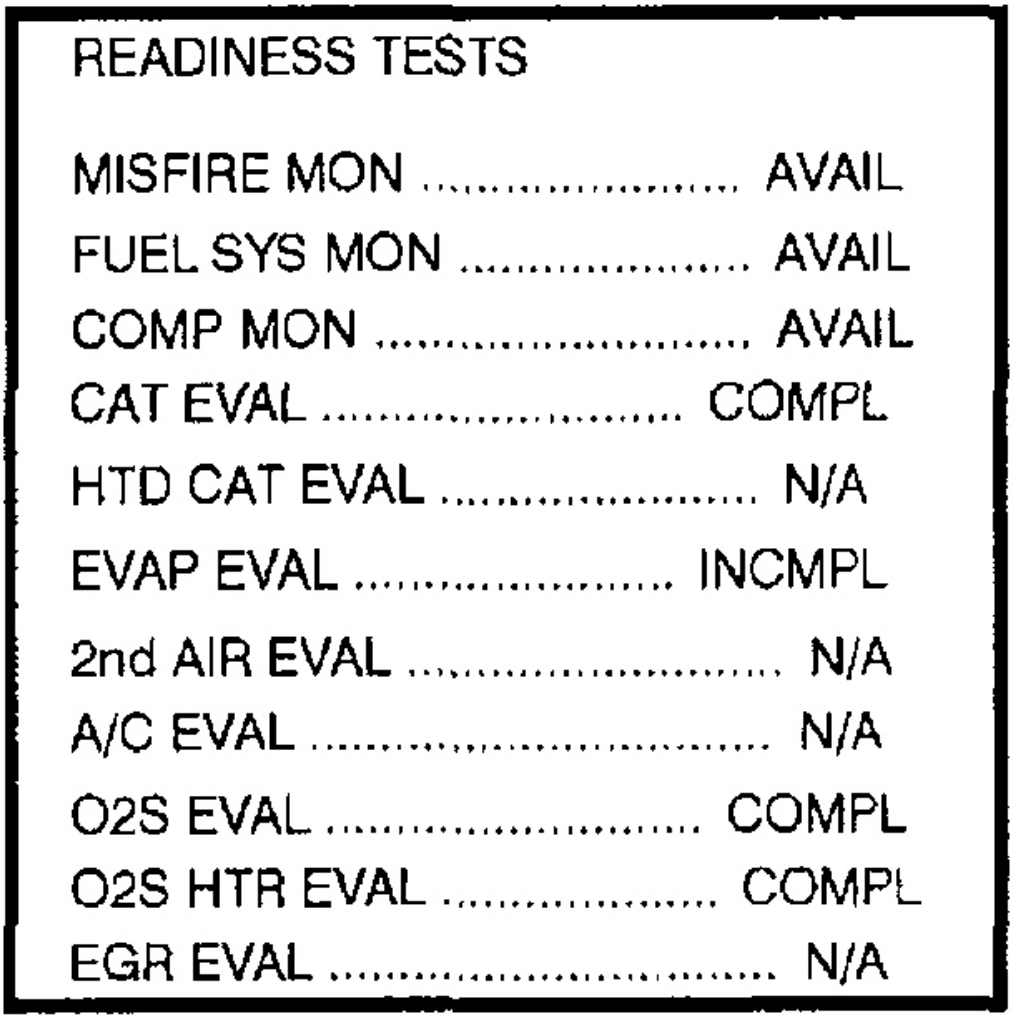

Fig. 169: Display Readiness Test Screen
Courtesy of TOYOTA MOTOR SALES, U.S.A., INC.

1. If all tests show "Pass", the following may have occurred.
   - The EVAP evaluation monitor did not operate.
   - The EVAP evaluation monitor did not finish.
   - The ECM withheld judgement.
2. If one or more tests in the time $02 category show "Fail", the EVAP evaluation monitor did operate and the ECM detected a problem.

cardiagn.com

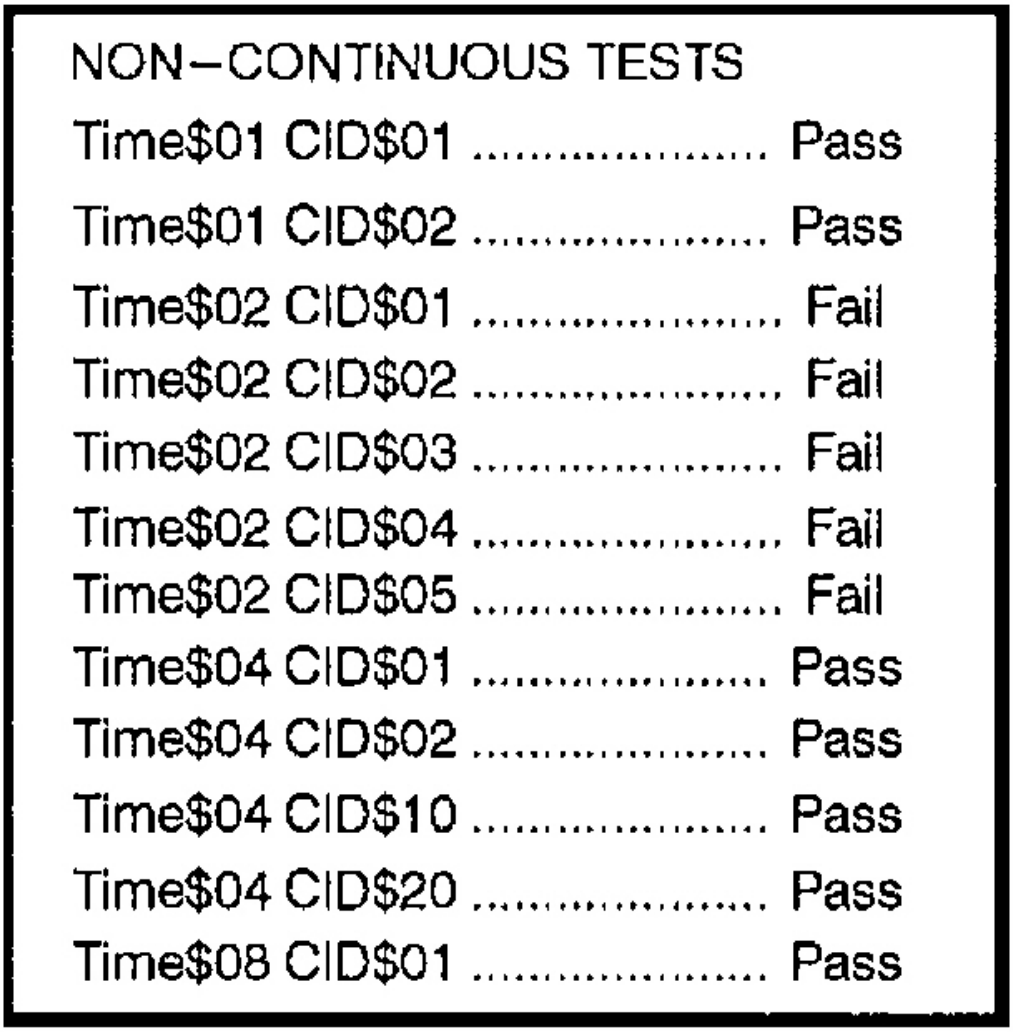

G02641868

Fig. 170: Display Non-Continuous Tests Screen
Courtesy of TOYOTA MOTOR SALES, U.S.A., INC.

3. Go to CONTINUOUS TESTS screen. This is the only place where first trip DTC's are listed.

NOTE: **The listed DTCs may not be valid. A second trip is needed to confirm the DTCs.**

cardiagn.com

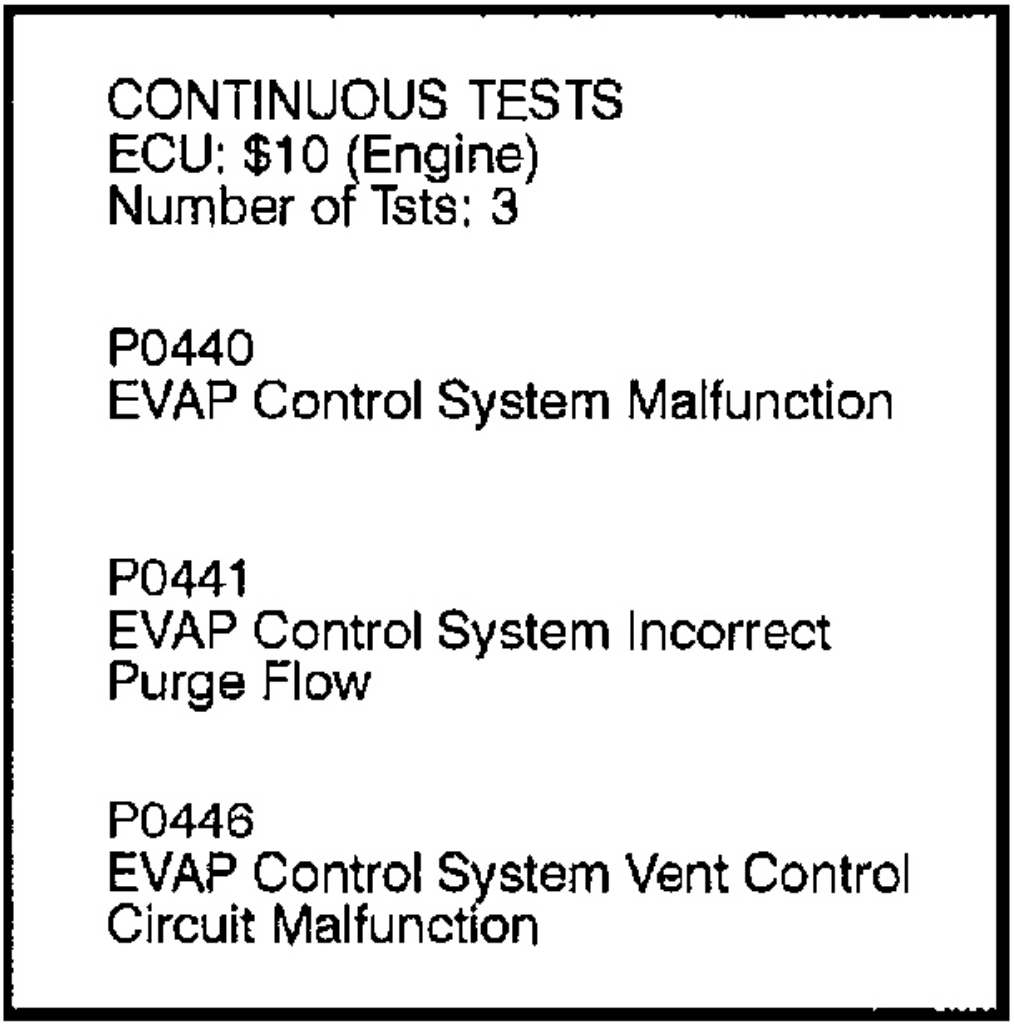

G02641869

Fig. 171: Display Continuous Tests Screen
Courtesy of TOYOTA MOTOR SALES, U.S.A., INC.

Second Trip Procedure

a. The vehicle must be cold, and the ambient temperature is between approximately 10°C (50°F) and 35°C (95°F).
b. Go to READINESS TESTS screen.
c. Drive the vehicle on a freeway. Write down the state of the EVAP evaluation monitor. This procedure

cardiagn.com

may take approximately 20 minutes or more.

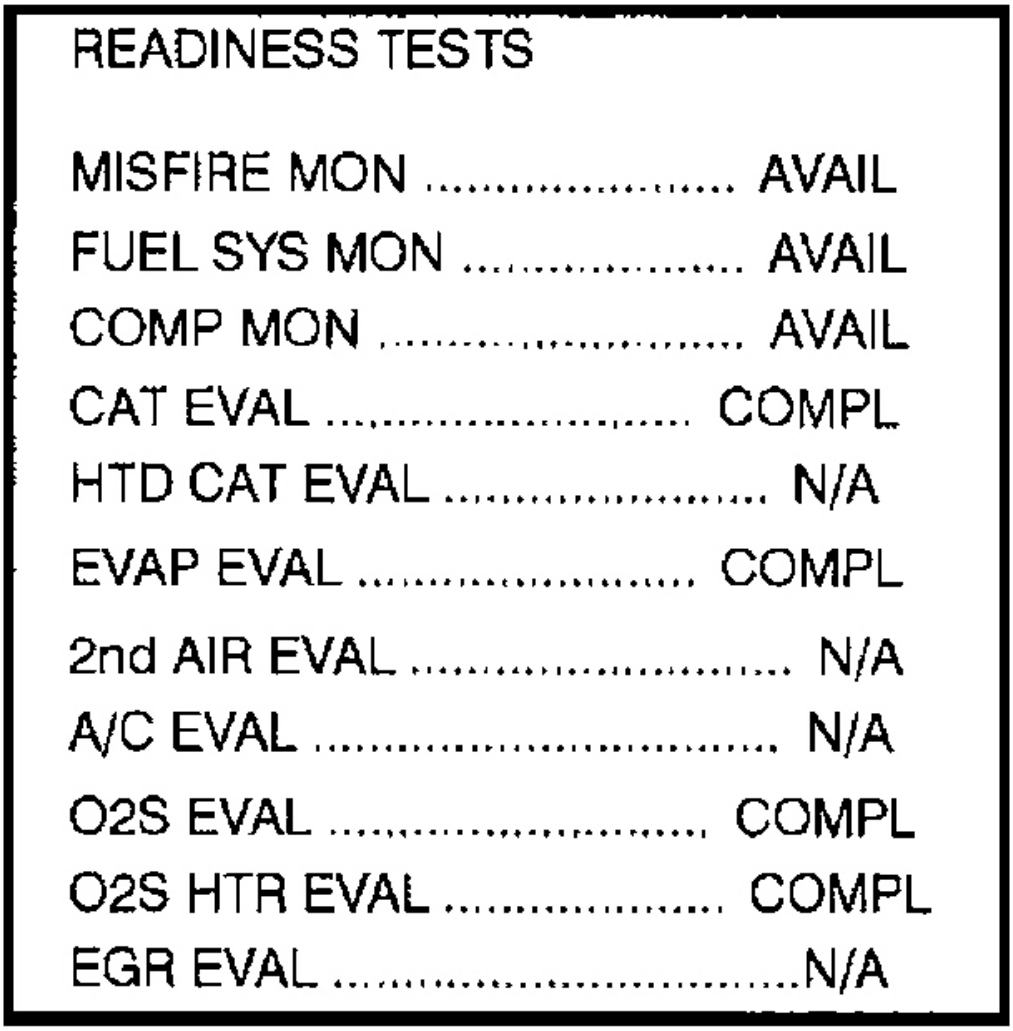

G02641870

Fig. 172: Display Readiness Test Screen
Courtesy of TOYOTA MOTOR SALES, U.S.A., INC.

NOTE: Do not shut off the engine - the results will be invalid.

If READINESS TESTS changes to COMPL, the EVAP evaluation monitor has operated. Check for any stored DTCs.

cardiagn.com

- If a DTC Is stored, the problem has been detected and confirmed by the ECM.
- If no DTC Is found, the EVAP monitor has operated but no problem Is detected.

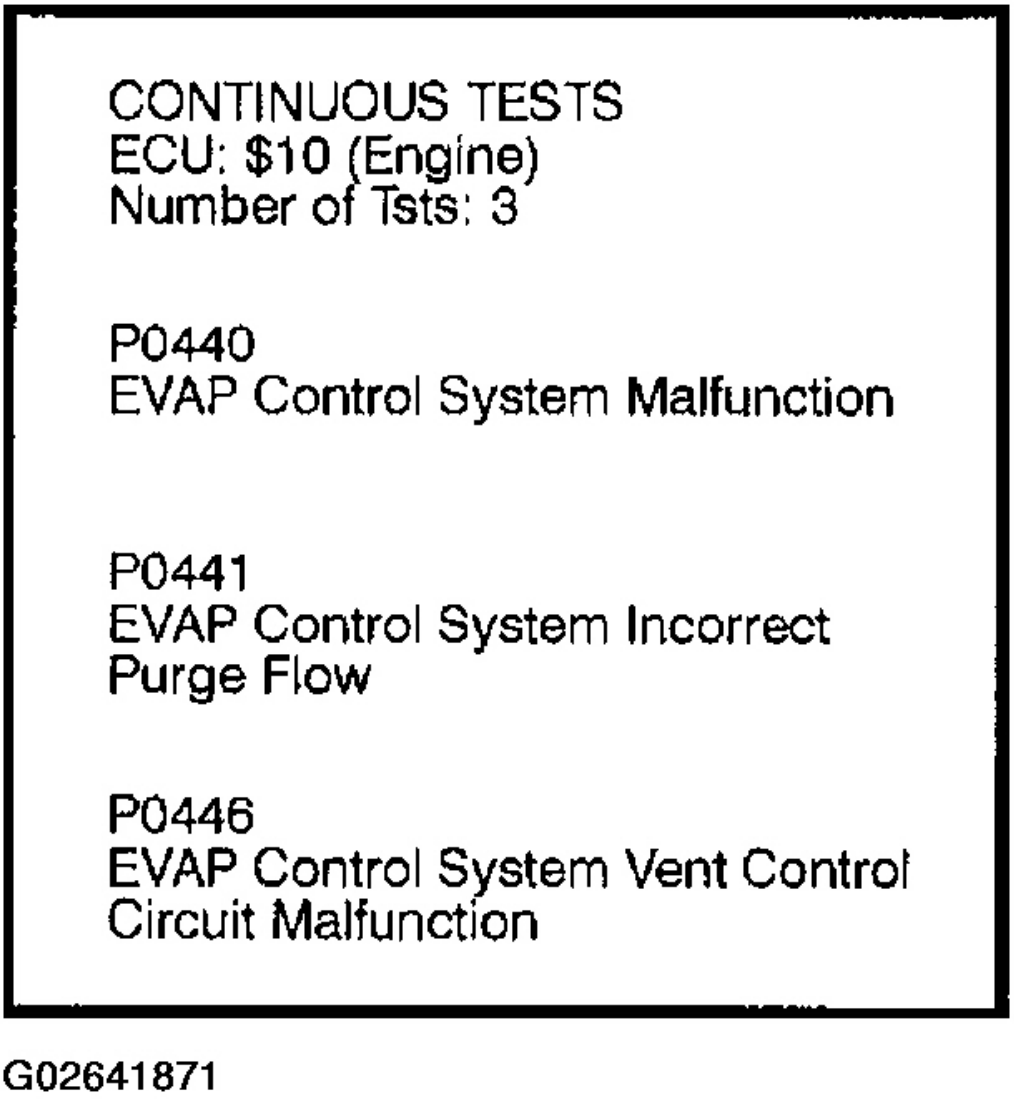

Fig. 173: Display Continuous Tests Screen
Courtesy of TOYOTA MOTOR SALES, U.S.A., INC.

INSPECTION PROCEDURE

HINT:

cardiagn.com

- If DTC P0441 (Purge Flow), P0446 (CCV or Pressure switching valve) or P0451 (evaporative pressure sensor) is output with DTC P0442 or P0456, first troubleshoot DTC P0441, P0446 or P0451. If no malfunction is detected, troubleshoot DTC P0442 or P0456 next.
- Ask the customer whether, after the MIL is turned on, the customer found the fuel tank cap loose and tightened it. Also ask the customer whether the fuel tank cap was loose when refuelling. If the fuel tank cap was loose, it was the cause of the DTC. If the fuel tank cap was not loose or if the customer was not sure if it was loose, troubleshoot according to the following procedure.
- Read freeze frame data using the hand-held tester or the OBD II scan tool. Freeze frame data records the engine conditions when a malfunction is detected. When troubleshooting, freeze frame data can help determine if the vehicle was running or stopped, if the engine was warmed up or not, if the air-fuel ratio was lean or rich, and other data from the time the malfunction occurred.
- When the ENGINE RUN TIME in the freeze frame data is less than 200 seconds, carefully check the vapor pressure sensor.

Hand-held tester:

1. **Check that fuel tank cap meets OEM specification.**

   NG: Replace it with a cap that meets OEM specification.

   OK: Go To Next Step
2. **Check that fuel tank cap is correctly installed.**

   NG: Correctly install fuel tank cap.

   OK: Go To Next Step
3. **Check fuel tank cap (see INSPECTION).**

   NG: Replace fuel tank cap.

   OK: Go To Next Step
4. **Check filler neck for damage.**

   PREPARATION:

   Remove the fuel tank cap.

   CHECK:

   a. Visually check the filler neck for damage.
   b. Reinstall the fuel tank cap.

   NG: Replace filler pipe.

   OK: Go To Next Step
5. **Check purge flow.**

   PREPARATION:

   a. Connect the hand-held tester to the DLC3.

cardiagn.com

b. Enter the following menus: DIAGNOSIS / ENHANCED OBD II / ACTIVE TEST mode on the hand-held tester.
c. Disconnect the EVAP VSV vacuum hose from the charcoal canister.
d. Start the engine.
e. Select the item EVAP VSV (ALON) / ALL in the ACTIVE TEST and operate the EVAP VSV (press the right or left button).

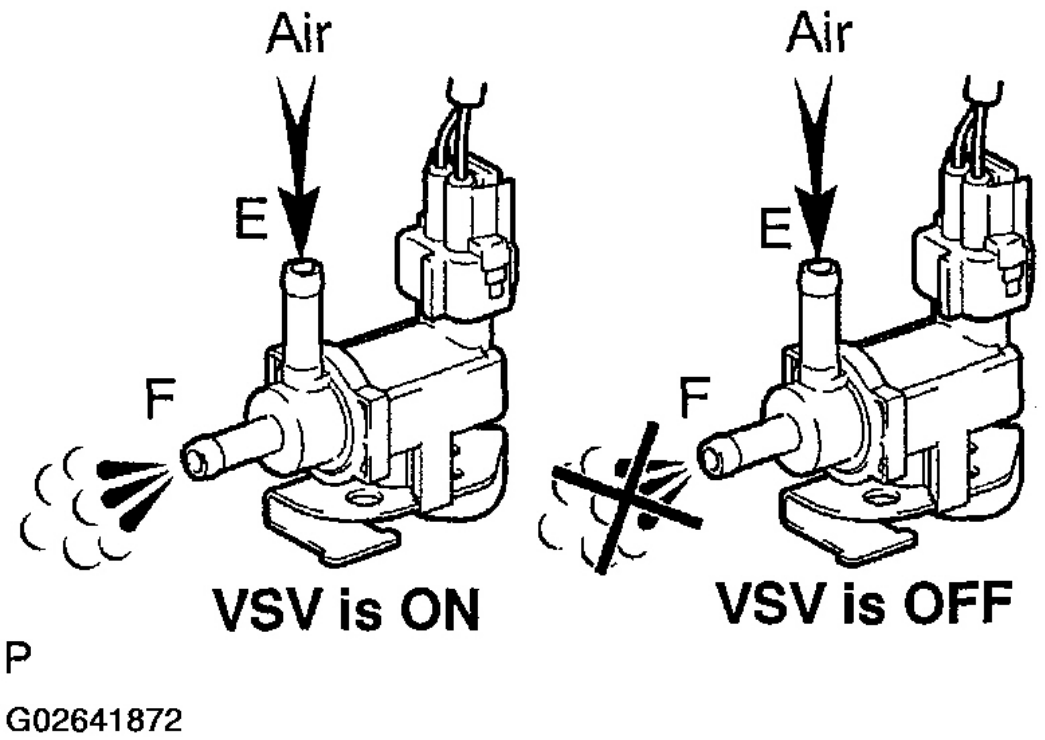

Fig. 174: Checking Purge Flow
Courtesy of TOYOTA MOTOR SALES, U.S.A., INC.

CHECK:

When the EVAP VSV is operated by the hand-held tester, check whether the disconnected hose applies suction to your finger.

OK:

VSV is ON:

Disconnected hose applies suction to your finger.

cardiagn.com

VSV is OFF:

Disconnected hose applies no suction to your finger.

OK: Go to step 9.

NG: Go To Next Step

6. **Check vacuum hose between intake manifold and EVAP VSV, and EVAP VSV and charcoal canister.**

   CHECK:

   a. Check that the vacuum hose is connected correctly.
   b. Check the vacuum hose for looseness and disconnection.
   c. Check the vacuum hose for cracks, puncture, damage and blockage.

   NG: Repair or replace vacuum hose.

   OK: Go To Next Step

7. **Check operation of EVAP VSV (see INSPECTION).**

   NG: Replace EVAP VSV.

   OK: Go To Next Step

8. **Check for open and short in wire harness between EFI main relay and EVAP VSV, and EVAP VSV and ECM (see HOW TO USE THE DIAGNOSTIC CHART AND INSPECTION PROCEDURE).**

   NG: Repair or replace harness and connector.

   OK: Replace ECM (see ENGINE CONTROL MODULE (ECM)).

9. **Check CCV.**

   PREPARATION:

   a. Disconnect the CCV vacuum hose from the charcoal canister.
   b. Turn ON the ignition switch. Push the hand-held tester main switch.
   c. Enter the following menus: DIAGNOSIS / ENHANCED OBD II / ACTIVE TEST mode on the hand-held tester.
   d. Select the item CAN CTRL VSV / ALL in the ACTIVE TEST and operate the CAN CTRL VSV (press the right or left button).

cardiagn.com

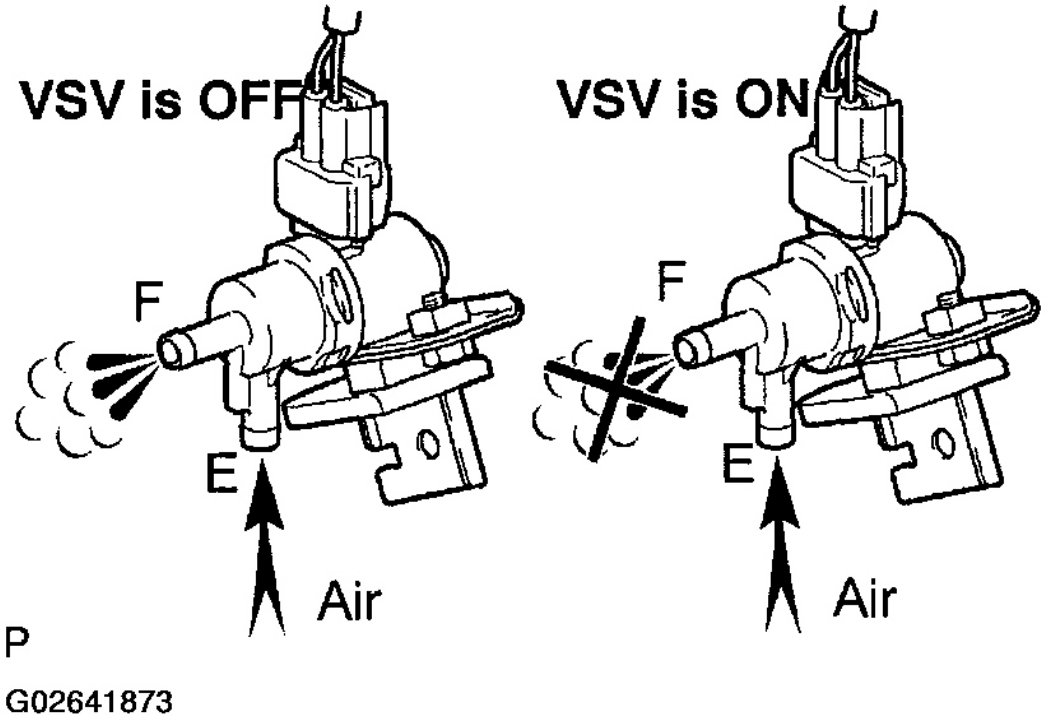

Fig. 175: Checking CCV
Courtesy of TOYOTA MOTOR SALES, U.S.A., INC.

CHECK:

When the VSV is operated by the hand-held tester, check whether or not air flows from port E to F.

OK:

VSV is ON:

Air does not flow from port E to port F.

VSV is OFF:

Air from port E flows out through port F.

OK: Go to step 13.
NG: Go To Next Step

10. **Check vacuum hose between CCV and charcoal canister.**

cardiagn.com

CHECK:

a. Check that the vacuum hose is connected correctly.
b. Check the vacuum hose for looseness and disconnection.
c. Check the vacuum hose for cracks, hole damage, and blockage.

NG: Repair or replace vacuum hose.

OK: Go To Next Step

11. **Check CCV operation (see INSPECTION).**

NG: Replace CCV.

OK: Go To Next Step

12. **Check for open and short in wire harness between EFI main relay and CCV, and CCV and ECM (see HOW TO USE THE DIAGNOSTIC CHART AND INSPECTION PROCEDURE).**

NG: Repair or replace harness and connector.

OK: Replace ECM (see ENGINE CONTROL MODULE (ECM)).

13. **Check pressure switching valve.**

PREPARATION:

a. Turn ON the ignition switch. Push the hand-held tester main switch ON.
b. Enter the following menus: DIAGNOSIS / ENHANCED OBD II / ACTIVE TEST mode on the hand-held tester.
c. Select the item TANK BYPASS VSV / ALL in the ACTIVE TEST and operate the TANK BYPASS VSV (press the right or left button).

cardiagn.com

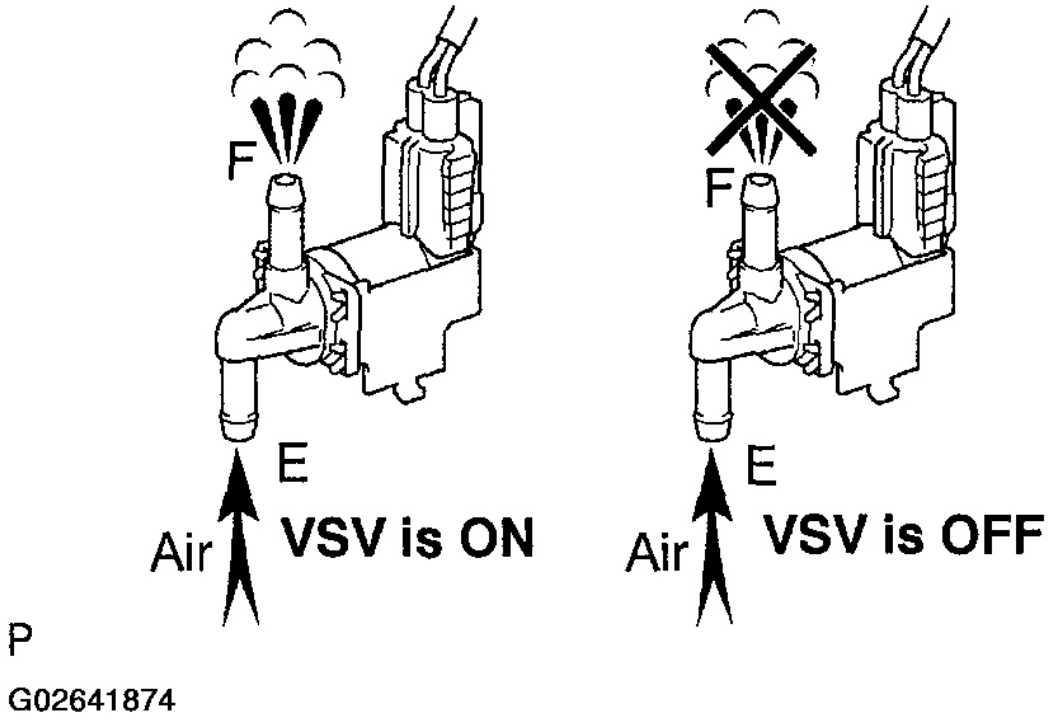

Fig. 176: Checking Pressure Switching Valve
Courtesy of TOYOTA MOTOR SALES, U.S.A., INC.

CHECK:

When the VSV is operated by the hand-held tester, check whether or not air flows from port E to F.

OK:

VSV is ON:

Air from port E flows out through port F.

VSV is OFF:

Air does not flow from port E to port F.

OK: Go to step 16.
NG: Go To Next Step

14. **Check pressure switching valve operation (see INSPECTION).**
NG: Replace pressure switching valve.

cardiagn.com

OK: Go To Next Step

15. **Check for open and short in wire harness between EFI main relay and pressure switching valve, and pressure switching valve and ECM (see HOW TO USE THE DIAGNOSTIC CHART AND INSPECTION PROCEDURE).**

    NG: Repair or replace harness and connector.

    OK: Replace ECM (see ENGINE CONTROL MODULE (ECM)).

16. **Check whether hose close to fuel tank has been modified, and whether there are signs of any accident near fuel tank or charcoal canister.**

    CHECK:

    Check the following parts for cracks, deformation and loose connection:

    - Fuel tank
    - Charcoal canister
    - Fuel tank filler pipe
    - Hoses and tubes around fuel tank and charcoal canister

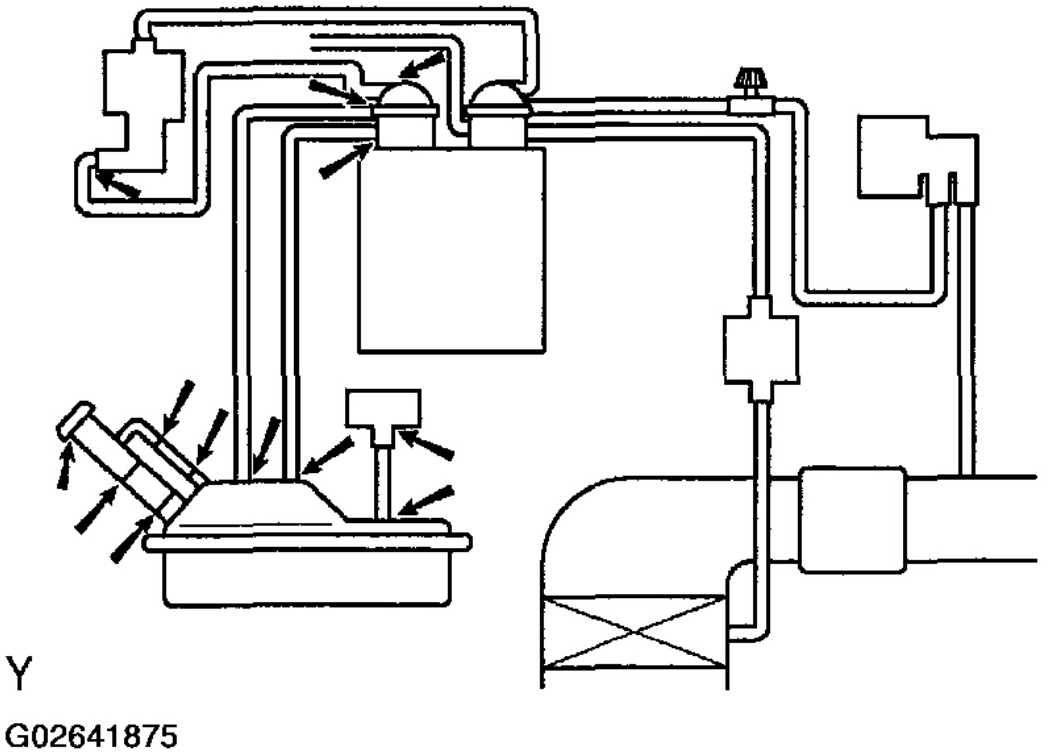

Fig. 177: Identifying Hoses & Tubes Around Fuel Tank & Charcoal Canister

cardiagn.com

Courtesy of TOYOTA MOTOR SALES, U.S.A., INC.

NG: Repair or replace evaporative emissions leak part.

OK: Go To Next Step

17. **Check vacuum hoses between vapor pressure sensor and fuel tank, and charcoal canister and pressure switching valve.**

CHECK:

a. Check that the vacuum hose is connected correctly.
b. Check the vacuum hose for looseness and disconnection.
c. Check the vacuum hose for cracks, puncture and damage.

NG: Repair or replace vacuum hose and tube.

OK: Go To Next Step

18. **Check hose and tube between fuel tank and charcoal canister.**

CHECK:

a. Check the connection between the fuel tank and fuel EVAP pipe, fuel EVAP pipe and under-floor fuel tube and under-floor fuel tube and charcoal canister.
b. Check the hose and tube for cracks, hole and damage.

NG: Repair or replace hose and tube.

OK: Go To Next Step

19. **Check voltage between terminals VC and E2 of ECM connector.**

CHECK:

a. Remove the glove compartment (see **ENGINE CONTROL MODULE (ECM)**).
b. Turn the ignition switch ON.

CHECK:

Measure the voltage between terminals VC and E2 of the ECM connector.

OK:

Voltage: 4.5 to 5.5 V

cardiagn.com

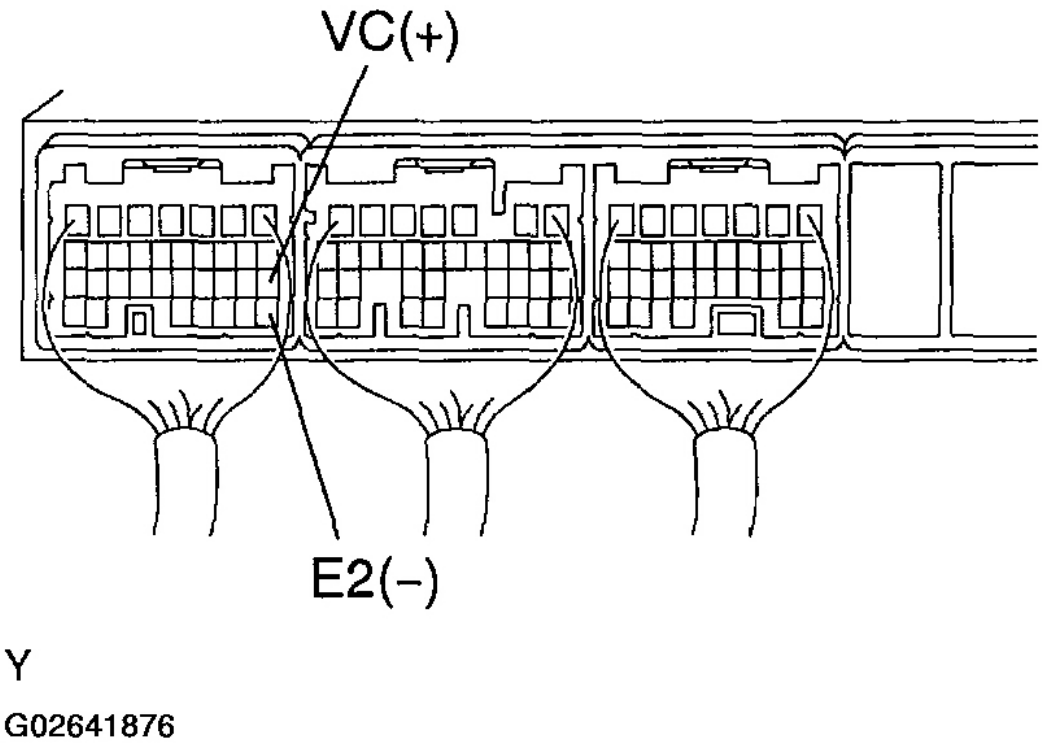

Fig. 178: Identifying Terminals VC & E2 Of ECM Connector
Courtesy of TOYOTA MOTOR SALES, U.S.A., INC.

NG: Replace ECM (see ENGINE CONTROL MODULE (ECM)).

OK: Go To Next Step

20. **Check voltage between terminals PTNK and E2 of ECM connectors.**

PREPARATION:

a. Remove the glove compartment (see **ENGINE CONTROL MODULE (ECM)**).
b. Turn the ignition switch ON.

CHECK:

Measure the voltage between terminals PTNK and E2 of the ECM connectors.

1. Disconnect the vacuum hose from the vapor pressure sensor.
2. Using the MITYVAC (hand-held vacuum pump), apply a vacuum of 4.0 kPa (30 mmHg, 1.18 in.Hg) to the vapor pressure sensor.

cardiagn.com

NOTE: **The vacuum applied to the vapor pressure sensor must be less than 66.7 kPa (500 mmHg, 19.7 in.Hg).**

OK:

1. **Voltage: 2.9 to 3.7 V**
2. **Voltage: 0.5 V or less**

cardiagn.com

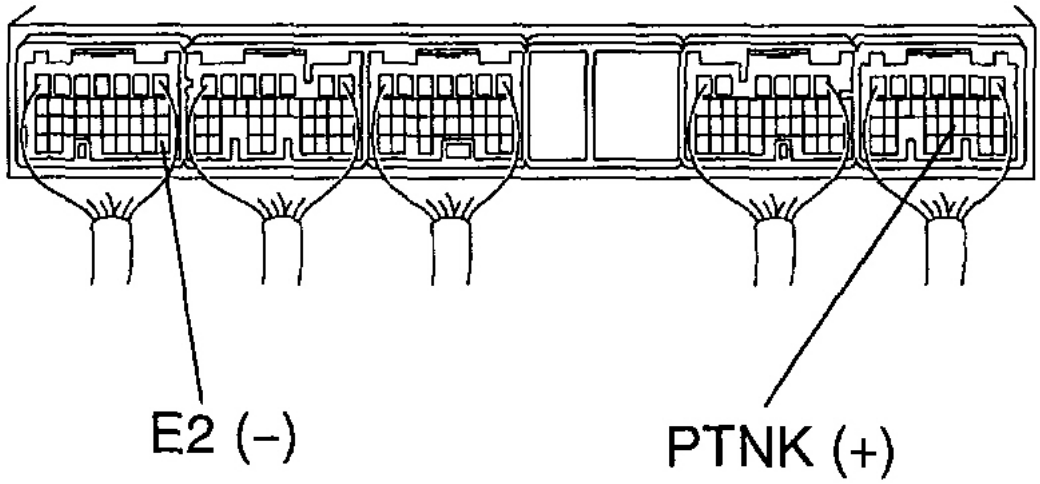

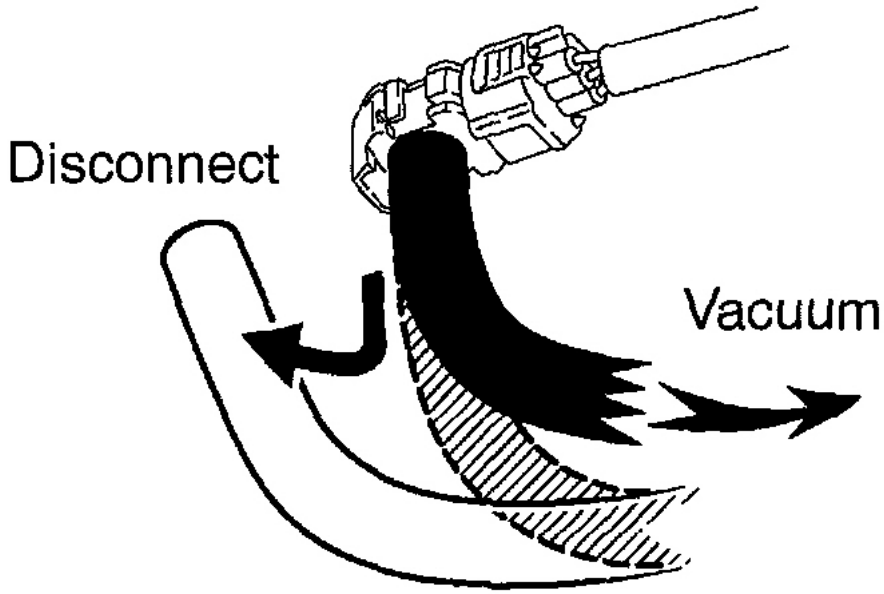

Fig. 179: Disconnecting Vacuum Hose From Vapor Pressure Sensor
Courtesy of TOYOTA MOTOR SALES, U.S.A., INC.

OK: Go to step 22.

cardiagn.com

NG: Go to next step.

21. **Check for open and short in wire harness between vapor pressure sensor and ECM (see HOW TO USE THE DIAGNOSTIC CHART AND INSPECTION PROCEDURE).**

    NG: Repair or replace harness and connector.

    OK: Replace ECM (see ENGINE CONTROL MODULE (ECM)).

22. **Check fuel tank over fill check valve.**

    NG: Replace fuel tank over fill check valve.

    OK: Go To Next Step

23. **Check fuel tank.**

    NG: Replace fuel tank.

    OK: Go To Next Step

24. **Check charcoal canister for crack, puncture and damage.**

    NG: Replace charcoal canister.

    OK: Replace ECM (see ENGINE CONTROL MODULE (ECM)).

OBD II scan tool (excluding hand-held tester):

1. **Check that fuel tank cap meets OEM specification.**

   NG: Replace it with a cap that meets OEM specification.

   OK: Go To Next Step

2. **Check that fuel tank cap is correctly installed.**

   NG: Correctly install fuel tank cap.

   OK: Go To Next Step

3. **Check fuel tank cap (see INSPECTION).**

   NG: Replace fuel tank cap.

   OK: Go To Next Step

4. **Check filler neck for damage.**

   PREPARATION:

   Remove the fuel tank cap.

   CHECK:

   a. Visually inspect the filler neck for damage.
   b. Reinstall the fuel tank cap.

   NG: Replace filler pipe.

   OK: Go To Next Step

5. **Check whether hose close to fuel tank have been modified, and whether there are signs of any accident near fuel tank or charcoal canister.**

cardiagn.com

CHECK:

Check for cracks, deformation and loose connection of the following parts:

- Fuel tank
- Charcoal canister
- Fuel tank filler pipe
- Hoses and tubes around fuel tank and charcoal canister

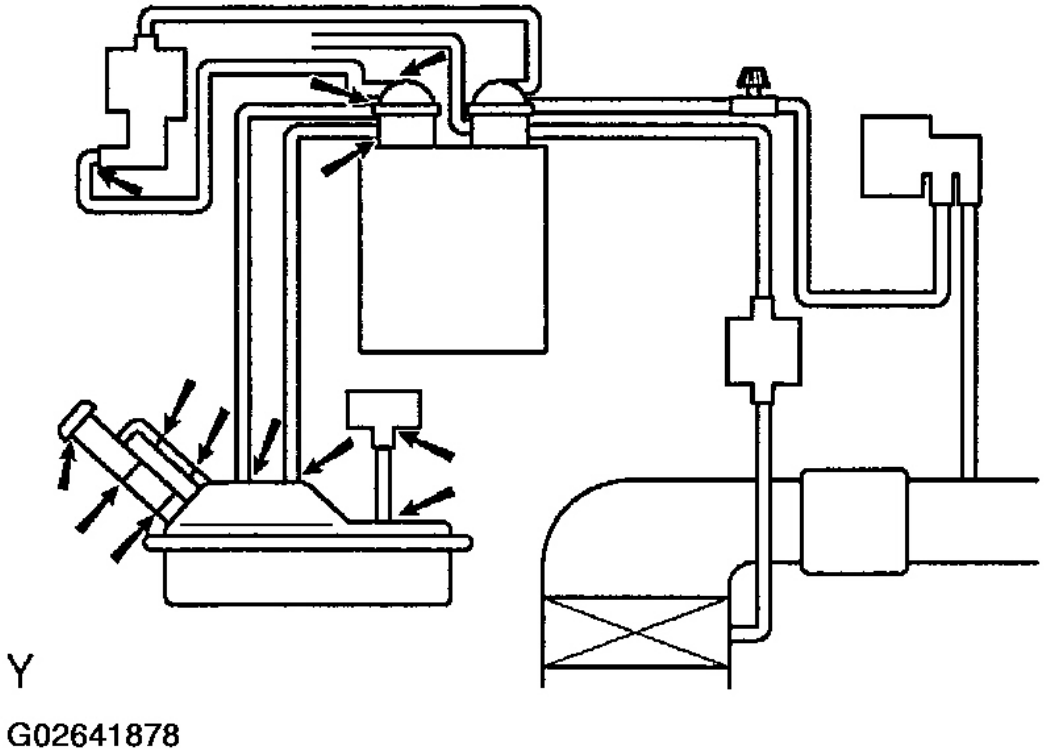

Fig. 180: Identifying Hoses & Tubes Around Fuel Tank & Charcoal Canister
Courtesy of TOYOTA MOTOR SALES, U.S.A., INC.

NG: Repair or replace evaporative emission leak part.

OK: Go To Next Step

6. **Check vacuum hoses between vapor pressure sensor and fuel tank, charcoal canister and pressure switching valve, and pressure switching valve and charcoal canister.**

CHECK:

cardiagn.com

a. Check that the vacuum hose is connected correctly.
b. Check the vacuum hose for looseness and disconnection.
c. Check the vacuum hose for cracks, puncture and damage.

NG: Repair or replace vacuum hose.

OK: Go To Next Step

7. **Check hose and tube between fuel tank and charcoal canister.**

CHECK:

a. Check for proper connection of the fuel tank and fuel evap pipe (see **INSPECTION**), fuel evap pipe and fuel tube under the floor, fuel tube under the floor and charcoal canister.
b. Check the hose and tube for cracks, puncture and damage.

NG: Repair or replace hose and tube.

OK: Go To Next Step

8. **Check vacuum hoses ((5), (6), (7) (8) and (9) in Fig. 1 in circuit description).**

CHECK:

a. Check that the vacuum hose is connected correctly.
b. Check the vacuum hose for looseness and disconnection.
c. Check the vacuum hose for cracks, puncture, damage and blockage.

NG: Repair or replace vacuum hose.

OK: Go To Next Step

9. **Check VSV connector for EVAP, VSV connector for CCV, VSV connector for pressure switching valve and vapor pressure sensor connector for looseness and disconnection.**

NG: Repair or connect VSV and sensor connector.

OK: Go To Next Step

10. **Check charcoal canister for crack, puncture and damage.**

NG: Check and replace charcoal canister.

OK: Go To Next Step

11. **Check voltage between terminals VC and E2 of ECM connector.**

CHECK:

a. Remove the grove compartment (see **ENGINE CONTROL MODULE (ECM)**).
b. Turn the ignition switch ON.

CHECK:

Measure the voltage between terminals VC and E2 of the ECM connector.

cardiagn.com

OK:

Voltage: 4.5 to 5.5 V

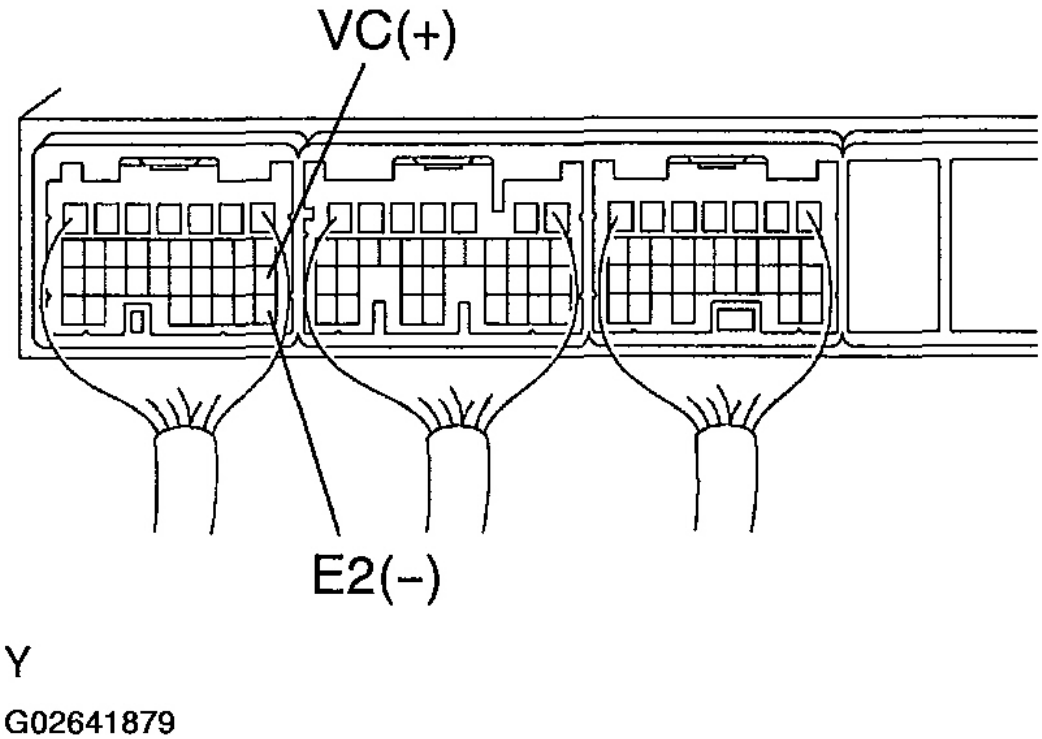

Fig. 181: Identifying Terminals VC & E2 Of ECM Connector
Courtesy of TOYOTA MOTOR SALES, U.S.A., INC.

NG: Replace ECM (see ENGINE CONTROL MODULE (ECM)).
OK: Go To Next Step

12. **Check voltage between terminals PTNK and E2 of ECM connectors.**

PREPARATION:

a. Remove the glove compartment (see **ENGINE CONTROL MODULE (ECM)**).
b. Turn the ignition switch ON.

CHECK:

Measure the voltage between terminals PTNK and E2 of the ECM connectors.

cardiagn.com

1. Disconnect the vacuum hose from the vapor pressure sensor.
2. Using the MITYVAC (hand-held vacuum pump), apply a vacuum of 4.0 kPa (30 mmHg, 1.18 in.Hg) to the vapor pressure sensor.

NOTE: The vacuum applied to the vapor pressure sensor must be less than 66.7 kPa (500 mmHg, 19.7 in.Hg).

OK:

1. **Voltage: 2.9 to 3.7 V**
2. **Voltage: 0.5 V or less**

cardiagn.com

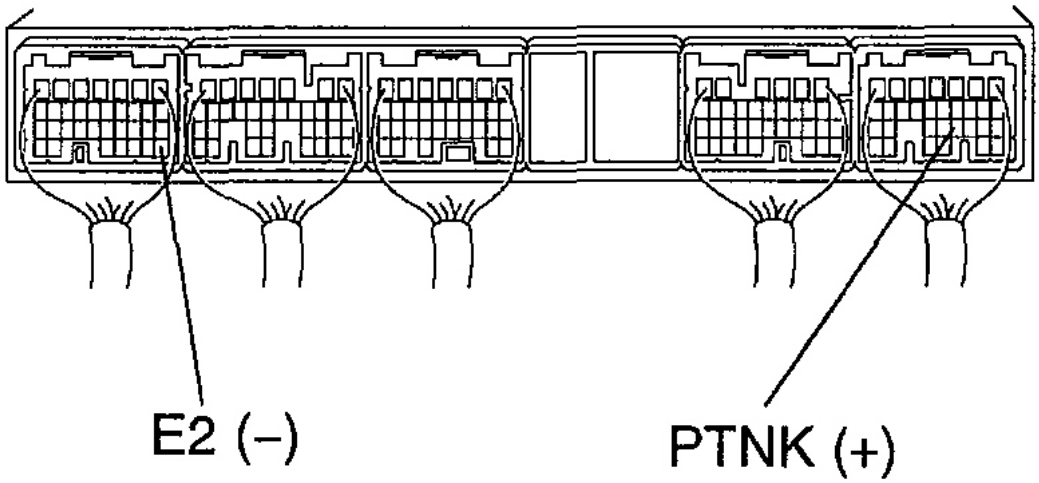

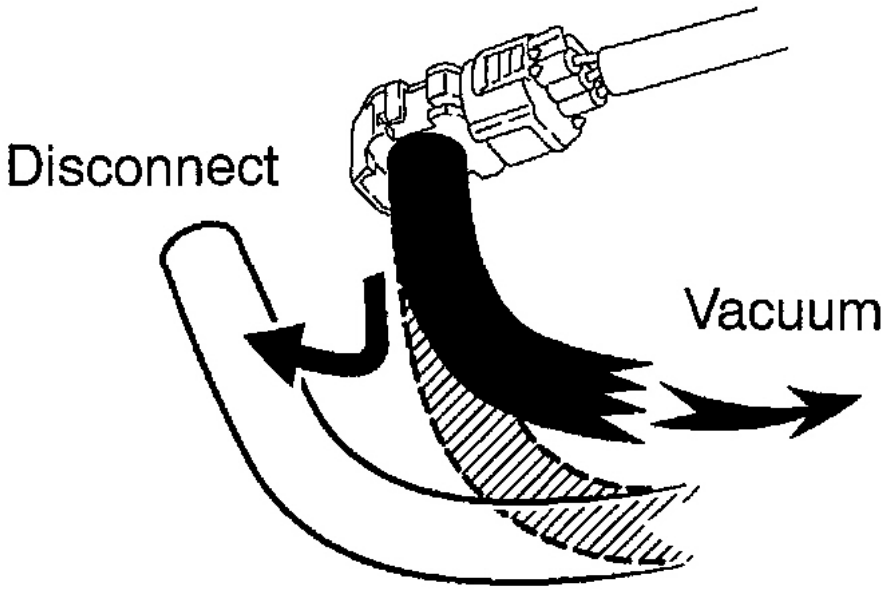

Fig. 182: Disconnecting Vacuum Hose From Vapor Pressure Sensor
Courtesy of TOYOTA MOTOR SALES, U.S.A., INC.

OK: Go to step 14.

cardiagn.com

NG: Go To Next Step

13. **Check for open and short in wire harness between vapor pressure sensor and ECM (see HOW TO USE THE DIAGNOSTIC CHART AND INSPECTION PROCEDURE).**

    NG: Repair or replace harness and connector.

    OK: Replace ECM (see ENGINE CONTROL MODULE (ECM)).

14. **Check EVAP VSV.**

PREPARATION:

a. Remove the glove compartment (see **ENGINE CONTROL MODULE (ECM)**).
b. Turn the ignition switch ON.

CHECK:

Check the VSV function.

1. Connect between terminal PRG of the ECM connector and body ground (ON).
2. Disconnect between terminal PRG of the ECM connector and body ground (OFF).

OK:

1. **VSV is ON:**

   Air from port E flows out through port F.

2. **VSV is OFF:**

   Air does not flow from port E to port F.

cardiagn.com

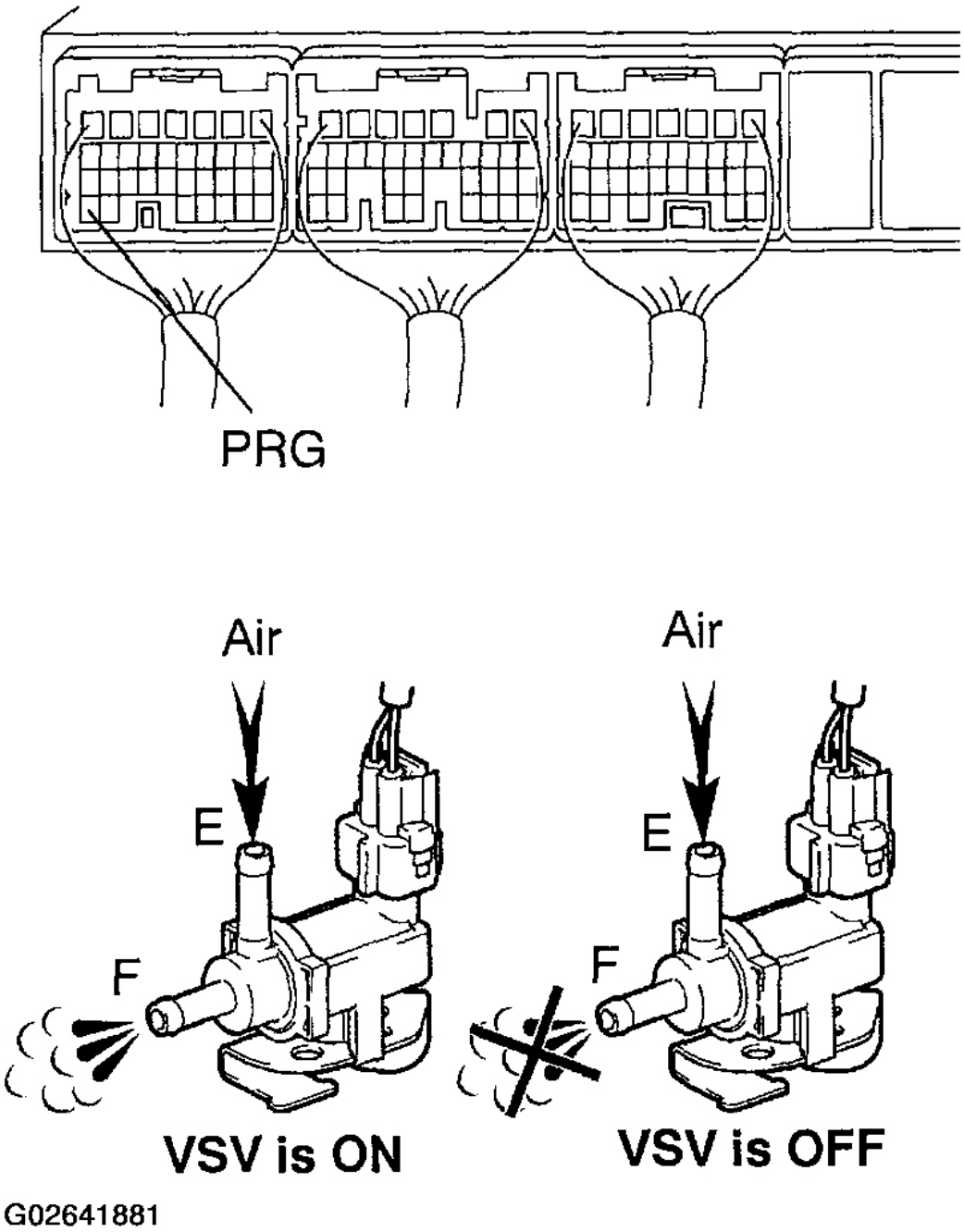

Fig. 183: Checking EVAP VSV
Courtesy of TOYOTA MOTOR SALES, U.S.A., INC.

OK: Go to step 17.

cardiagn.com

NG: Go To Next Step

15. **Check operation of EVAP VSV (see INSPECTION).**

    NG: Replace EVAP VSV.

    OK: Go To Next Step

16. **Check for open and short in wire harness between EFI main relay and EVAP VSV, and EVAP VSV and ECM (see HOW TO USE THE DIAGNOSTIC CHART AND INSPECTION PROCEDURE)**

    NG: Repair or replace harness and connector.

    OK: Replace ECM (see ENGINE CONTROL MODULE (ECM)).

17. **Check CCV.**

PREPARATION:

a. Remove the grove compartment (see **ENGINE CONTROL MODULE (ECM)**).
b. Turn the ignition switch ON.

CHECK:

Check the VSV function.

1. Connect between terminal CCV of the ECM connector and body ground (ON).
2. Disconnect between terminal CCV of the ECM connector and body ground (OFF).

OK:

VSV is ON:

Air does not flow from port E to port F.

VSV is OFF:

Air from port E flows out through port F.

cardiagn.com

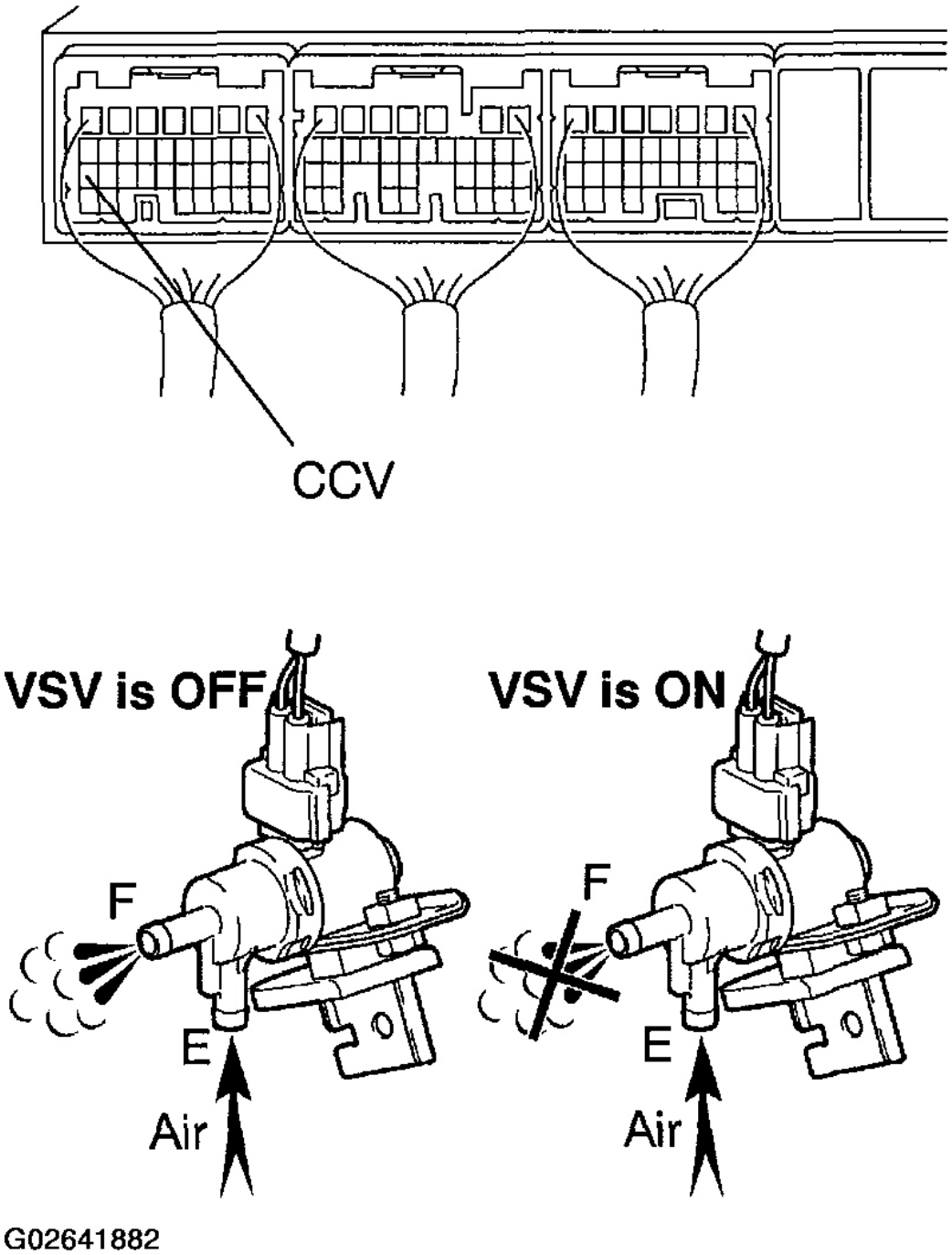

Fig. 184: Checking CCV
Courtesy of TOYOTA MOTOR SALES, U.S.A., INC.

OK: Go to step 20.

cardiagn.com

NG: Go To Next Step

18. **Check operation of CCV (see INSPECTION).**

    NG: Replace CCV.

    OK: Go To Next Step

19. **Check for open and short in wire harness between EFI main relay and CCV, and CCV and ECM (see HOW TO USE THE DIAGNOSTIC CHART AND INSPECTION PROCEDURE).**

    NG: Repair or replace harness and connector.

    OK: Replace ECM (see ENGINE CONTROL MODULE (ECM)).

20. **Check pressure switching valve.**

PREPARATION:

a. Remove the grove compartment (see **ENGINE CONTROL MODULE (ECM)**).
b. Turn the ignition switch ON.

CHECK:

Check the VSV function.

1. Connect between terminal TBP of the ECM connector and body ground (ON).
2. Disconnect between terminal TBP of the ECM connector and body ground (OFF).

OK:

1. **VSV is ON:**

   Air from port E flows out through port F.

2. **VSV is OFF:**

   Air does not flow from port E to port F.

cardiagn.com

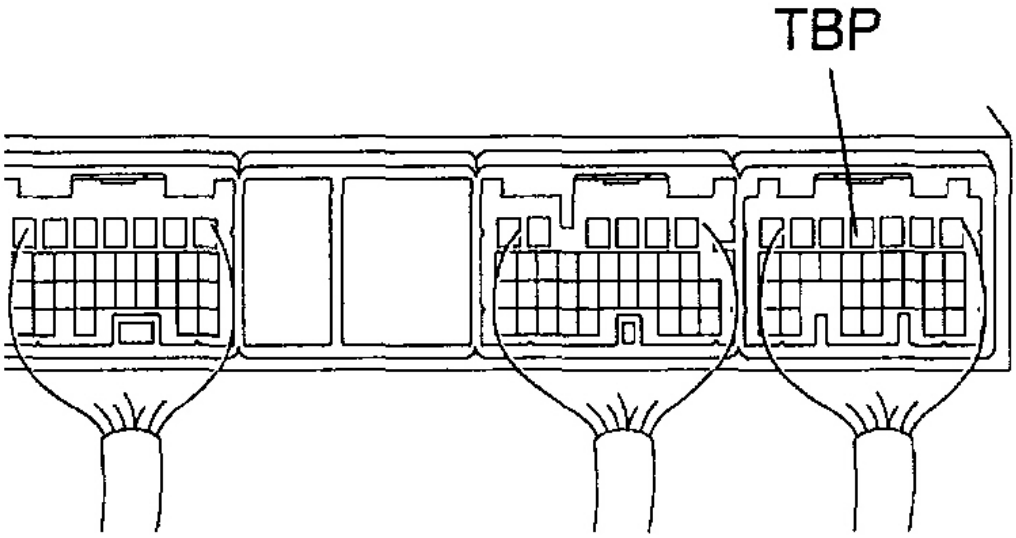

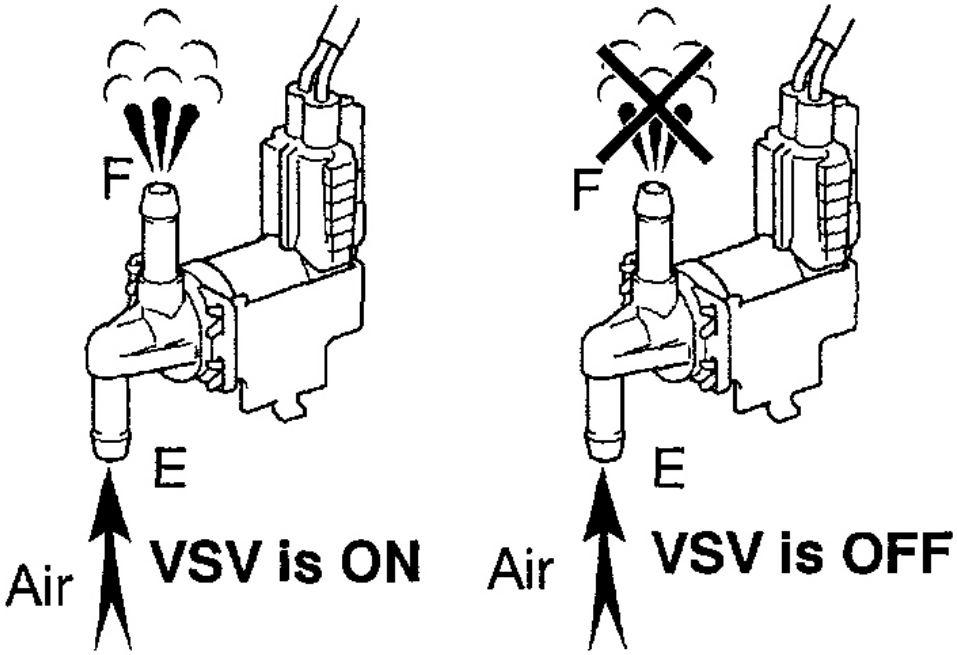

G02641883

cardiagn.com

Fig. 185: Checking Pressure Switching Valve
Courtesy of TOYOTA MOTOR SALES, U.S.A., INC.

OK: Go to step 23.

NG: Go To Next Step

21. **Check operation of pressure switching valve (see INSPECTION).**

    NG: Replace pressure switching valve.

    OK: Go To Next Step

22. **Check for open and short in wire harness between EFI main relay and pressure switching valve, and pressure switching valve and ECM (see HOW TO USE THE DIAGNOSTIC CHART AND INSPECTION PROCEDURE).**

    NG: Repair or replace harness and connector.

    OK: Replace ECM (see ENGINE CONTROL MODULE (ECM)).

23. **Check fuel tank over fill check valve.**

    NG: Replace fuel tank over fill check valve.

    OK: Go To Next Step

24. **Check fuel tank.**

    NG: Replace fuel tank.

    OK: Go To Next Step

25. **Check charcoal canister for crack, puncture and damage.**

    NG: Replace charcoal canister.

    OK: It is likely that vehicle user did not properly close fuel tank cap.

DTC P0451, P0452, P0453: EVAPORATIVE EMISSION CONTROL SYSTEM PRESSURE SENSOR/SWITCH RANGE/PERFORMANCE LOW/HIGH INPUT

CIRCUIT DESCRIPTION

The vapor pressure sensor, CCV and pressure switching valve are used to detect abnormalities in the evaporative emission control system.

The ECM decides whether there is an abnormality in the evaporative emission control system based on the vapor pressure sensor signal.

cardiagn.com

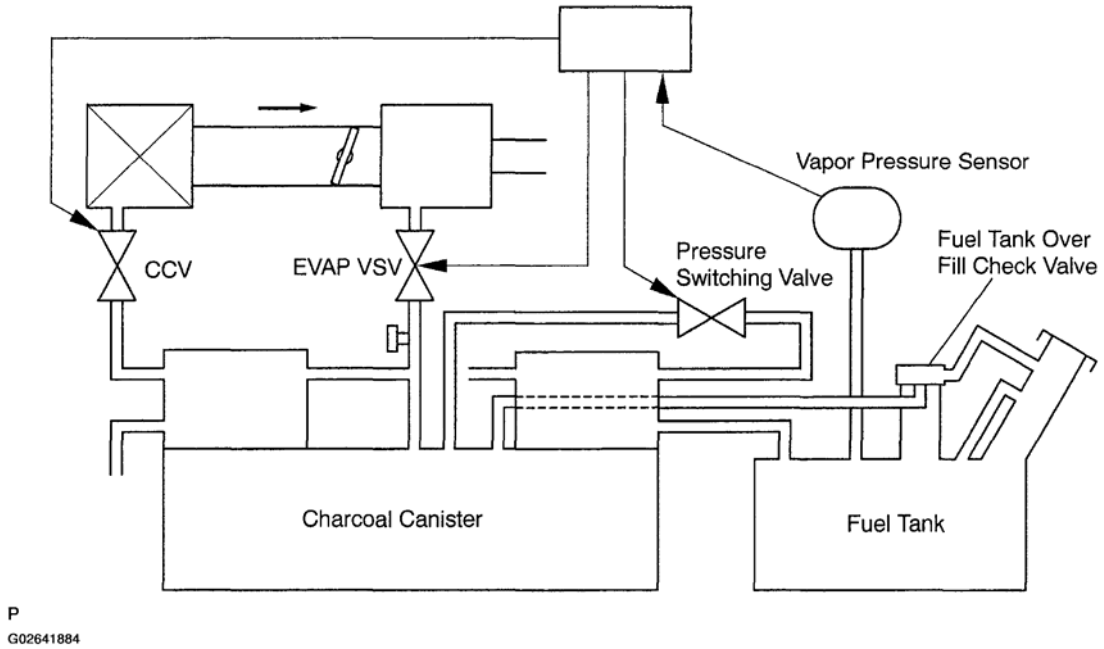

Fig. 186: System Diagram - Evaporative Emission Control System
Courtesy of TOYOTA MOTOR SALES, U.S.A., INC.

MONITOR DESCRIPTION

DTC "P0451, P0452 or P0453" is recorded by the ECM when the vapor pressure sensor malfunctions.

P0451

The ECM senses pressure in the fuel tank using the vapor pressure sensor. The ECM supplies the sensor with a regulated 5 V reference-voltage and the sensor returns a signal voltage between 0.5 V and 4.5 V according to the pressure level in the fuel tank.

When the pressure in the fuel tank is low, the output voltage of the vapor pressure sensor is low. When it is high, the output voltage is high.

For this DTC P0451, the ECM checks for a "noisy" sensor or a "stuck" sensor.

The ECM checks for a "noisy" sensor by monitoring the fuel tank pressures when the vehicle is stationary and there should be little variation in the tank pressure. If the indicated pressure varies beyond specified limits, the ECM will illuminate the MIL (2-trip detection logic) and a DTC is set.

The ECM checks for a "stuck" sensor by monitoring the fuel tank pressure for an extended time period. If the indicated pressure does not change over this period, the ECM will conclude that the fuel tank pressure sensor is malfunctioning, the ECM will illuminate the MIL and a DTC is set.

P0452 and P0453

cardiagn.com

The ECM senses pressure in the fuel tank using the vapor pressure sensor. The ECM supplies the sensor with a regulated 5 V reference-voltage and the sensor returns a signal voltage between 0.5 V and 4.5 V according to the pressure level in the fuel tank.

When the pressure in the fuel tank is low, the output voltage of the vapor pressure sensor is low. When it is high, the output voltage is high.

If the output voltage of the vapor pressure sensor is out of the normal range, the ECM will determine that there is a malfunction in the sensor or sensor circuit.

When pressure indicated by the vapor pressure sensor deviates below -3.999 kPa (-30 mmHg) or above 1.999 kPa (15 mmHg), the ECM interprets this as a malfunction in the vapor pressure sensor. The ECM will turn on the MIL and a DTC will be set.

DTC No.	DTC Detection Condition	Trouble Area
P0451	• Vapor pressure sensor's voltage output extremely changes under the following conditions: (a) and (b) (2 trip detection logic): (a) Vehicle speed: 0 km/h (0mph), Engine speed: Idling, and pressure switching valve: OFF (b) Vapor pressure sensor value greater than opening pressure value of charcoal canister	• Open or short in vapor pressure sensor circuit • Vapor pressure sensor • ECM
P0452	Vapor pressure sensor is less than −3.999 kPa (−30 mmHg, −1.18 in.Hg) for 7 sec. (2 trip detection logic)	
P0453	Vapor pressure sensor is 1.999 kPa (15 mmHg, 0.59 in.Hg) or more for 7 sec. (2 trip detection logic)	

G02641885

Fig. 187: DTC P0451, P0452 & P0453 - DTC Detection Condition Chart
Courtesy of TOYOTA MOTOR SALES, U.S.A., INC.

MONITOR STRATEGY

MONITOR STRATEGY

Related DTCs	P0451: FTP sensor noise P0451: FTP sensor stuck P0452: FTP sensor range check (Low voltage) P0453: FTP sensor range check (High voltage)
Required sensors / components (Main)	FTP sensor
Required sensors / components (Related)	ECT sensor, IAT sensor
Frequency of operation	Once per driving cycle
Duration	7 sec.: FTP sensor range check 10 sec.: FTP sensor noise (P0451) 5 min.: FTP sensor stuck
MIL operation	2 driving cycles
Sequence of operation	None

cardiagn.com

TYPICAL ENABLING CONDITIONS

All:

TYPICAL ENABLING CONDITIONS (ALL)

The monitor will run whenever the following DTCs are not present	None

FTP Sensor Noise and FTP Sensor Stuck (P0451):

TYPICAL ENABLING CONDITIONS (FTP SENSOR NOISE AND FTP SENSOR STUCK (P0451))

Battery voltage	11 V
Altitude	7,870 ft. (2,400 m) or less
IAT at engine start	4.4 to 35°C (40 to 95°F)
ECT at engine start	4.4 to 35°C (40 to 95°F)
Difference between engine start IAT and engine start ECT	-7 to 11.1°C (-12.6 to 20°F)

FTP Sensor Range Check (P0452: Low voltage) (P0453: High voltage):

TYPICAL ENABLING CONDITIONS (FTP SENSOR RANGE CHECK (P0452: LOW VOLTAGE) (P0453: HIGH VOLTAGE))

ECT at engine start	10 to 35°C (50 to 95°F)
IAT at engine start	10 to 35°C (50 to 95°F)
Difference between engine start ECT and engine start IAT	12°C (21.6°F) or less
Engine condition	Running

TYPICAL MALFUNCTION THRESHOLDS

FTP Sensor Noise (P0451):

TYPICAL MALFUNCTION THRESHOLDS (FTP SENSOR NOISE (P0451))

Number that the following condition is set	5 times from 5 to 15 sec. after idling start
FTP change (during 5 to 15 sec after idling start)	5 mmHg (0.667 kPa) or more

FTP Sensor Stuck (P0451):

TYPICAL MALFUNCTION THRESHOLDS (FTP SENSOR STUCK (P0451))

FTP change for 5 min	Less than 0.135 mmHg (0.018 kPa)

FTP Sensor Range Check (Low voltage) (P0452):

TYPICAL MALFUNCTION THRESHOLDS (FTP SENSOR RANGE CHECK (LOW VOLTAGE) (P0452))

FTP	Less than -30 mmHg (-4 kPa) [Less than 730 mmHg)

cardiagn.com

FTP Sensor Range Check (High voltage):

TYPICAL MALFUNCTION THRESHOLDS (FTP SENSOR RANGE CHECK (HIGH VOLTAGE))

FTP	15 mmHg (2 kPa) or more [775 mmHg or more]

COMPONENT OPERATING RANGE

COMPONENT OPERATING RANGE

FTP	-26 to 11 mmHg (-3.5 to 1.5 kPa) [734 to 771 mmHg]

WIRING DIAGRAM

Refer to wiring diagram **DTC P0441, P0446, P2418: EVAPORATIVE EMISSION CONTROL SYSTEM INCORRECT PURGE FLOW/VENT CONTROL CIRCUIT/VALVE CONTROL CIRCUIT/OPEN**.

INSPECTION PROCEDURE

HINT:

- If DTC P0441 (purge flow), P0446 (CCV), P2418 (pressure switching valve), P0451 (evaporative pressure sensor), P0452 (evaporative pressure sensor low input), or P0453 (evaporative pressure sensor low input) is output after DTC P0442 or P0456, first troubleshoot DTC P0441, P0446, P2418, P0451, P0452 or P0453. If no malfunction is detected, troubleshoot DTC P0442 or P0456 next.
- If different DTCs related to different systems that have terminal E2 as the ground terminal are output simultaneously, terminal E2 may be open.
- Read freeze frame data using the hand-held tester or the OBD II scan tool. Freeze frame data records the engine conditions when a malfunction is detected. When troubleshooting, freeze frame data can help determine if the vehicle was running or stopped, if the engine was warmed up or not, if the air-fuel ratio was lean or rich, and other data from the time the malfunction occurred.
- When the ENGINE RUN TIME in the freeze frame data is less than 200 seconds, carefully check the EVAP VSV, charcoal canister and vapor pressure sensor.

1. **Check voltage between terminals VC and E2 of ECM connector.**

   PREPARATION:

   a. Remove the glove compartment (see **ENGINE CONTROL MODULE (ECM)**).
   b. Turn the ignition switch ON.

   CHECK:

   Measure the voltage between terminals VC and E2 of the ECM connector.

   OK:

cardiagn.com

Voltage: 4.5 to 5.5 V

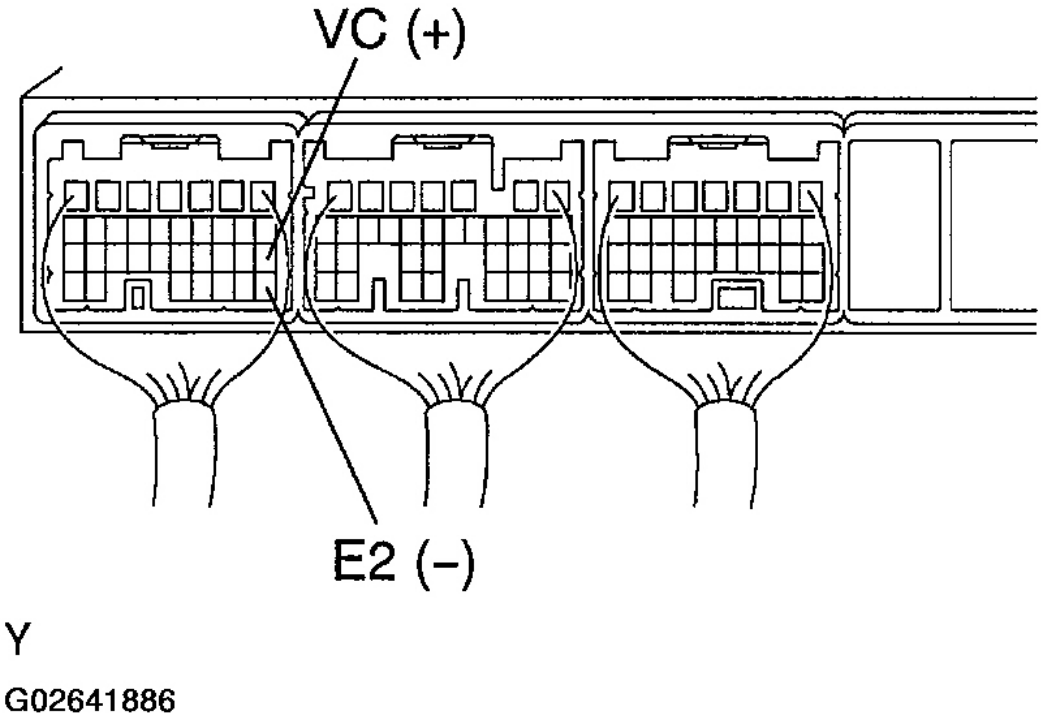

Fig. 188: Identifying Terminals VC & E2 Of ECM Connector
Courtesy of TOYOTA MOTOR SALES, U.S.A., INC.

NG: Replace ECM (see ENGINE CONTROL MODULE (ECM)).

OK: Go To Next Step

2. **Check voltage between terminals PTNK and E2 of ECM connectors.**

PREPARATION:

a. Remove the glove compartment (see **ENGINE CONTROL MODULE (ECM)**).
b. Turn the ignition switch ON.

CHECK:

Measure the voltage between terminals PTNK and E2 of the ECM connectors.

1. Disconnect the vacuum hose from the vapor pressure sensor.
2. Using the MITYVAC (hand-held vacuum pump), apply a vacuum of 4.0 kPa (30 mmHg, 1.18 in.Hg) to the vapor pressure sensor.

cardiagn.com

NOTE: **The vacuum applied to the vapor pressure sensor must be less than 66.7 kPa (500 mmHg, 19.7 in.Hg).**

OK:

1. **Voltage: 2.9 to 3.7 V**
2. **Voltage: 0.5 V or less**
3. **A consecutive waveform presents.**

cardiagn.com

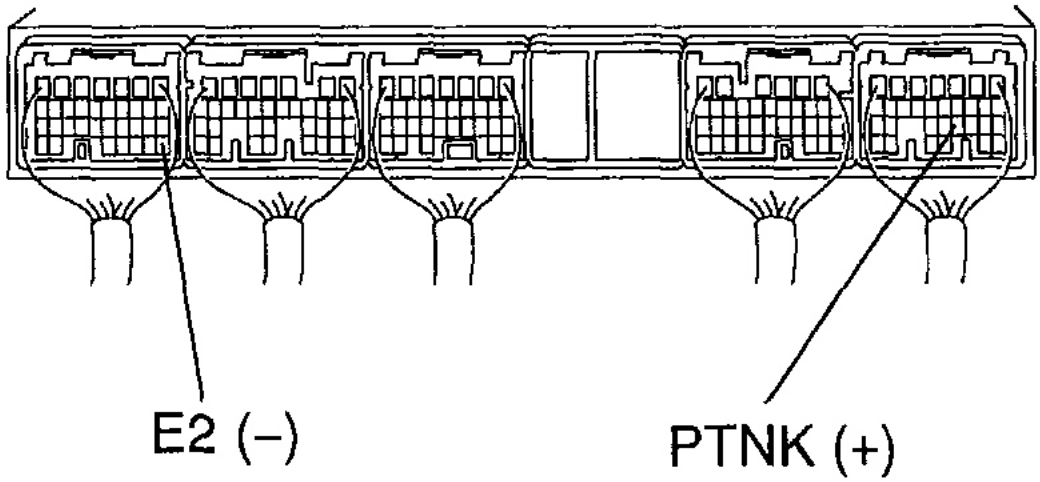

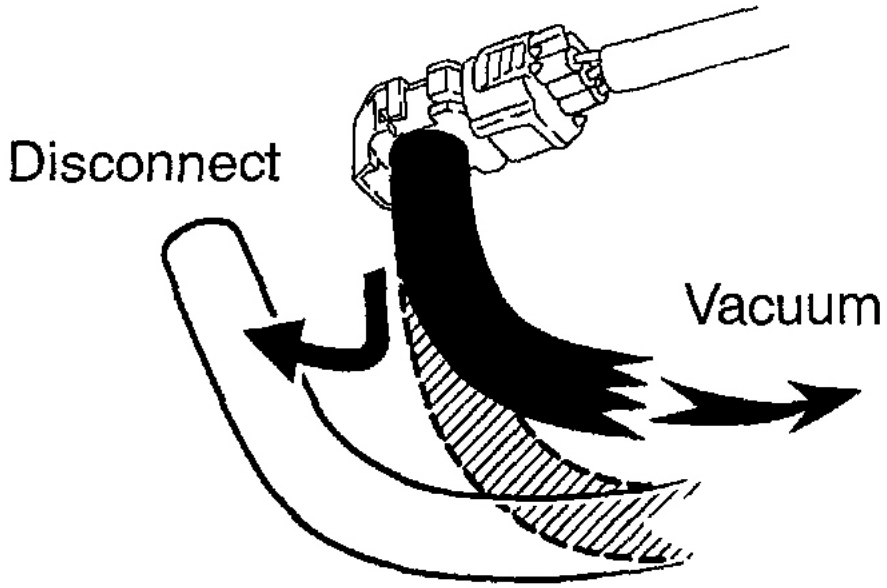

Fig. 189: Disconnecting Vacuum Hose From Vapor Pressure Sensor
Courtesy of TOYOTA MOTOR SALES, U.S.A., INC.

OK: Check for intermittent problems (see PRE-CHECK).

cardiagn.com

NG: Go To Next Step

3. **Check for open and short in wire harness between vapor pressure sensor and ECM (see HOW TO USE THE DIAGNOSTIC CHART AND INSPECTION PROCEDURE).**

   NG: Repair or replace harness and connector.

   OK: Replace vapor pressure sensor.

DTC P0500: VEHICLE SPEED SENSOR MALFUNCTION

CIRCUIT DESCRIPTION

The No. 1 vehicle speed sensor outputs a 4-pulse signal for every revolution of the rotor shaft, which is rotated by the transmission output shaft via the driven gear. After this signal is converted into a more precise rectangular waveform by the waveform shaping circuit inside the combination meter, it is then transmitted to the ECM. The ECM determines the vehicle speed based on the frequency of these pulse signals.

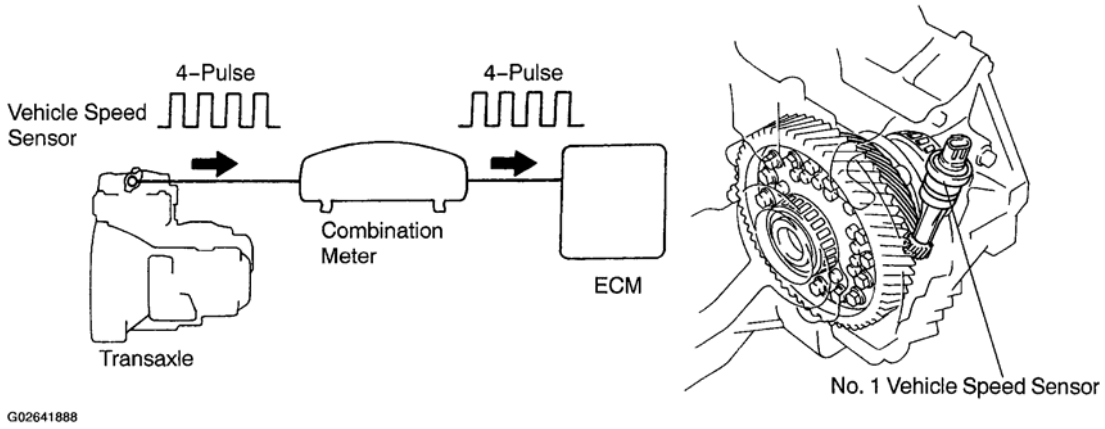

Fig. 190: Vehicle Speed Sensor Communication Diagram With ECM
Courtesy of TOYOTA MOTOR SALES, U.S.A., INC.

DTC No.	DTC Detection Condition	Trouble Area
P0500	While vehicle is being driven, no vehicle speed sensor signal to ECM (M/T: 2 trip detection logic) (A/T: 1 trip detection logic)	• Open or short in vehicle speed sensor circuit • Vehicle speed sensor • Combination meter • ECM

G02641889

Fig. 191: DTC P0500 - DTC Detection Condition Chart
Courtesy of TOYOTA MOTOR SALES, U.S.A., INC.

MONITOR DESCRIPTION

The ECM assumes that the vehicle is driven when the park/neutral position switch is OFF and it has been over 4 seconds since the actual vehicle speed was 9 km/h (6 mph) or more.

cardiagn.com

If there is no signal from the vehicle speed sensor with these conditions satisfied, the ECM concludes that there is a fault in the vehicle speed sensor. The ECM will turn on the MIL and a DTC is set.

MONITOR STRATEGY

MONITOR STRATEGY

Related DTCs	P0500: VSS circuit
Required sensors / components (Main)	VSS, Combination meter, ABS ECU
Required sensors / components (Related)	PNP switch, ECT sensor
Frequency of operation	Continuous
Duration	1 sec.: Automatic transmission 8 sec.: Manual transmission
MIL operation	Immediate: Automatic transmission 2 driving cycles: Manual transmission
Sequence of operation	None

TYPICAL ENABLING CONDITIONS

TYPICAL ENABLING CONDITIONS

The monitor will run whenever the following DTCs are not present	None

Automatic Transmission:

TYPICAL ENABLING CONDITIONS (AUTOMATIC TRANSMISSION)

Countergear speed	300 rpm or more
Engine condition	Running
Either of the following conditions A and B is met:	
Conditions A:	
Time after PNP switch ON to OFF	2 sec. or more
ECT and ECT sensor	ECT is 20°C (68°F) or more and ECT sensor does not malfunction (P0115 or P0116)
Conditions B:	
Time after PNP switch ON to OFF	30 sec. or more
ECT and ECT sensor	ECT is less than 20°C (68°F) or ECT sensor malfunction (P0115 or P0116)
Time after ignition switch ON	3 sec. or more

Manual Transmission:

TYPICAL ENABLING CONDITIONS (MANUAL TRANSMISSION)

ECT	70°C (158°F) or more
Engine RPM	2,000 to 5,000 rpm

cardiagn.com

Intake air amount per revolution	0.55 g/rev or more

TYPICAL MALFUNCTION THRESHOLDS

TYPICAL MALFUNCTION THRESHOLDS

VSS signal	No pulse input

WIRING DIAGRAM

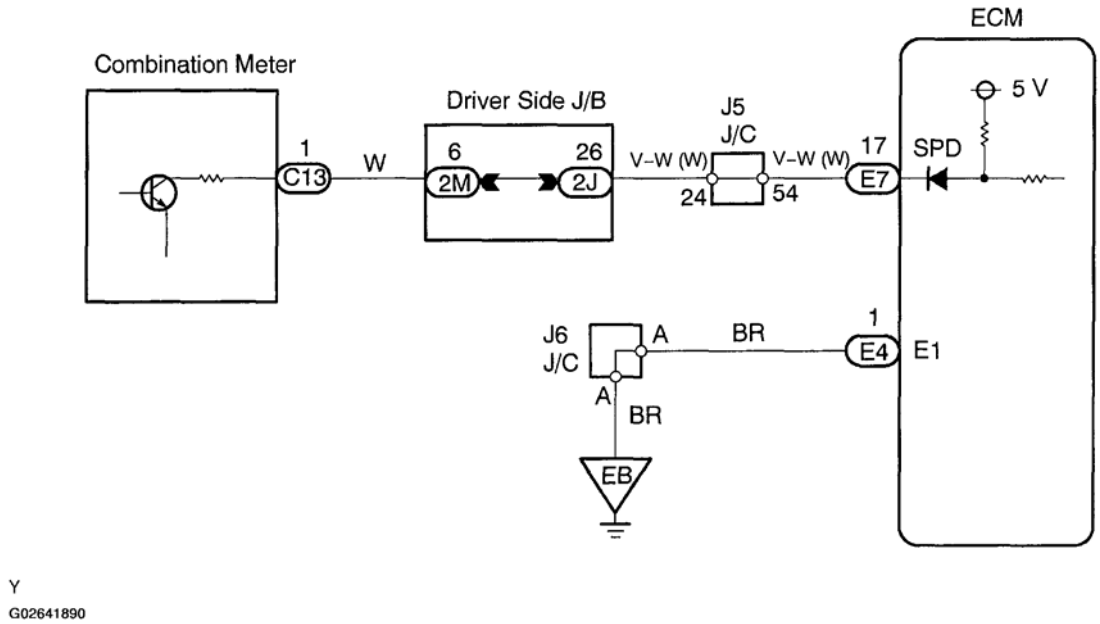

Fig. 192: Wiring Diagram - Vehicle Speed Sensor Circuit
Courtesy of TOYOTA MOTOR SALES, U.S.A., INC.

INSPECTION PROCEDURE

HINT:

Read freeze frame data using the hand-held tester or the OBD II scan tool. Freeze frame data records the engine conditions when a malfunction is detected. When troubleshooting, freeze frame data can help determine if the vehicle was running or stopped, if the engine was warmed up or not, if the air-fuel ratio was lean or rich, and other data from the time the malfunction occurred.

1. **Check operation of speedometer.**

   CHECK:

   Drive the vehicle and check if operation of the speedometer in the combination meter is normal.

cardiagn.com

HINT:

The vehicle speed sensor is operating normally if the speedometer display is normal.

NG: Check speedometer circuit.
OK: Go To Next Step

2. **Check for short in wire harness between terminal SPD of ECM connector and body ground.**

PREPARATION:

a. Remove the glove compartment (see **ENGINE CONTROL MODULE (ECM)**).
b. Disconnect the E7 connector from the ECM.

CHECK:

Check the resistance between terminal SPD of the ECM connector and body ground.

OK:

Resistance: 10 kohm or higher

cardiagn.com

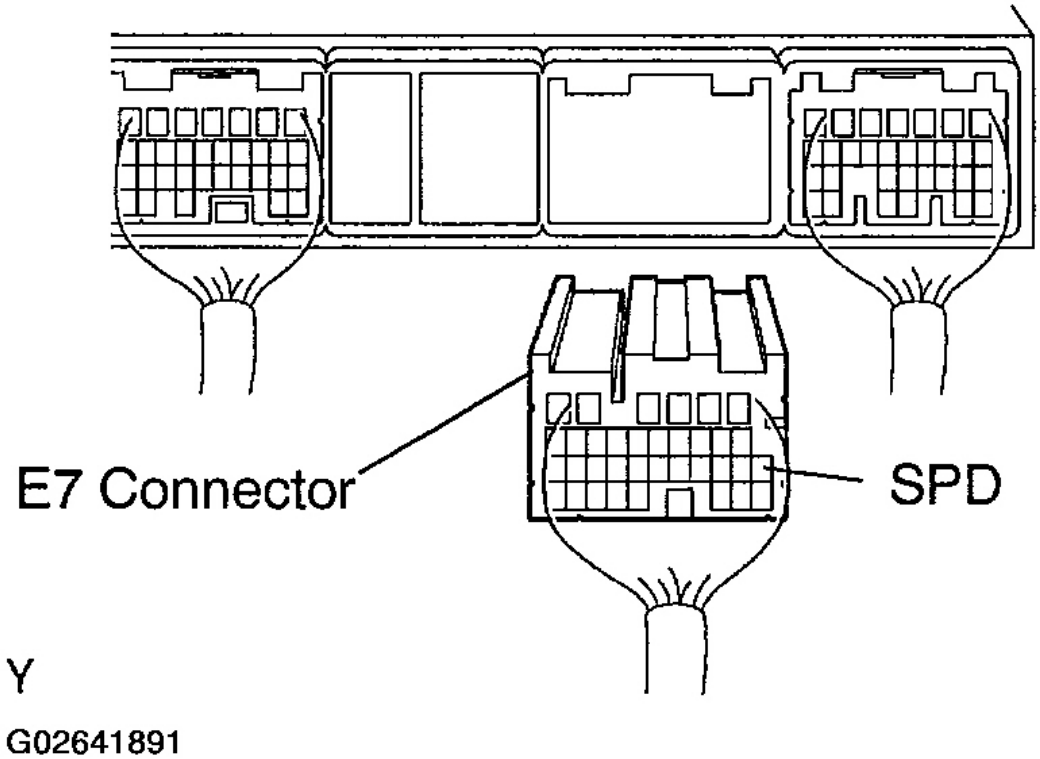

Fig. 193: Disconnecting E7 Connector From ECM
Courtesy of TOYOTA MOTOR SALES, U.S.A., INC.

NG: Repair of replace harness and connector.

OK: Go To Next Step

3. **Check voltage between terminal SPD of ECM connector and body ground.**

PREPARATION:

a. Remove the glove compartment (see **ENGINE CONTROL MODULE (ECM)**).
b. Shift the shift lever to neutral.
c. Jack up the vehicle.
d. Turn the ignition switch ON.

CHECK:

Measure the voltage between terminal SPD of the ECM connector and the body ground when the wheel is turned slowly.

cardiagn.com

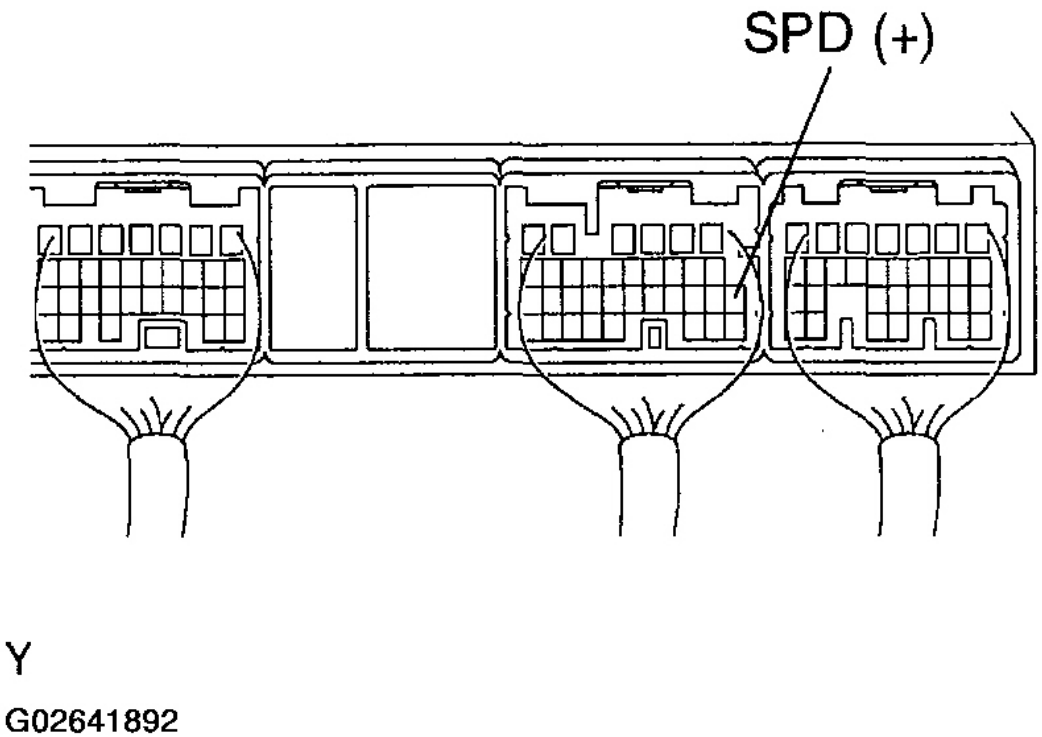

Fig. 194: Identifying Terminal SPD Of ECM Connector
Courtesy of TOYOTA MOTOR SALES, U.S.A., INC.

OK:

Voltage is generated intermittently.

HINT:

The output voltage should fluctuate up and down similarly to the diagram on the left when the wheel is turned slowly.

cardiagn.com

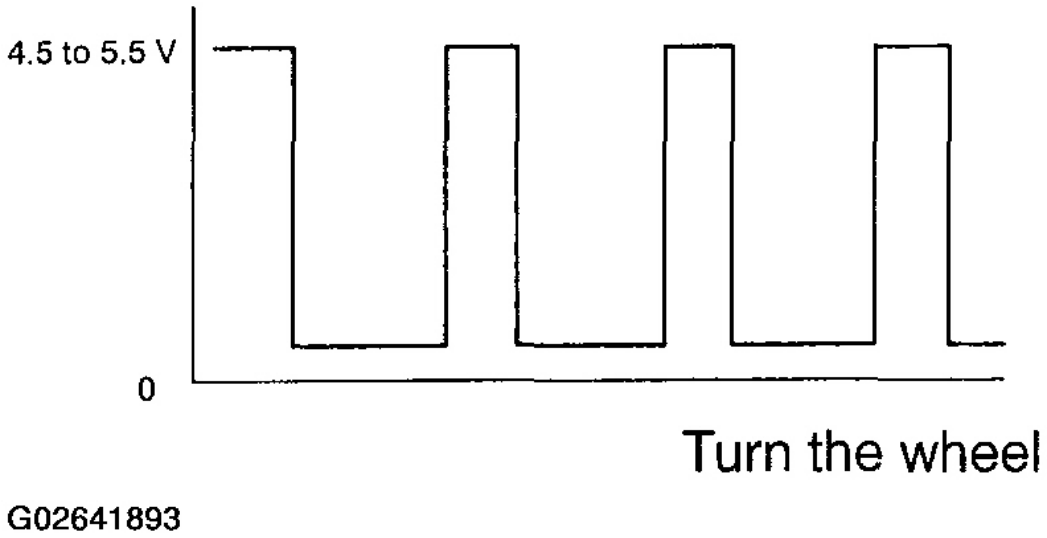

Fig. 195: ECM Connector Terminal Voltage Graph
Courtesy of TOYOTA MOTOR SALES, U.S.A., INC.

NG: Check and repair harness and connector between combination meter and ECM.

OK: Replace ECM (see ENGINE CONTROL MODULE (ECM)).

DTC P0504: BRAKE SWITCH "A"/"B" CORRELATION

CIRCUIT DESCRIPTION

In addition to turning on the stop light, the stop light switch signals are used for a variety of engine, transmission, and suspension functions as well as being an input for diagnostic checks. It is important that the switch operates properly, therefore this switch is designed with two complementary signal outputs: STP and ST1-. The ECM analyzes these signal outputs to detect malfunctions in the stop light switch.

HINT:

Normal condition is as shown in the table.

SIGNAL AND BRAKE PEDAL POSITION DETAIL

Signal	Brake Pedal Released	In Transition	Brake Pedal Depressed
STP	OFF	ON	ON
ST1-	ON	ON	OFF

cardiagn.com

DTC No.	DTC Detection Condition	Trouble Area
P0504	Condition (a), (b) and (c) continue for 0.5 seconds or more (a) Ignition switch ON (b) Brake pedal released (c) STP signal is OFF when the ST1– signal is OFF	• Short in stop light switch signal circuit • Stop light switch • STOP fuse • ECM

G02641894

Fig. 196: DTC P0504 - DTC Detection Condition Chart
Courtesy of TOYOTA MOTOR SALES, U.S.A., INC.

WIRING DIAGRAM

cardiagn.com

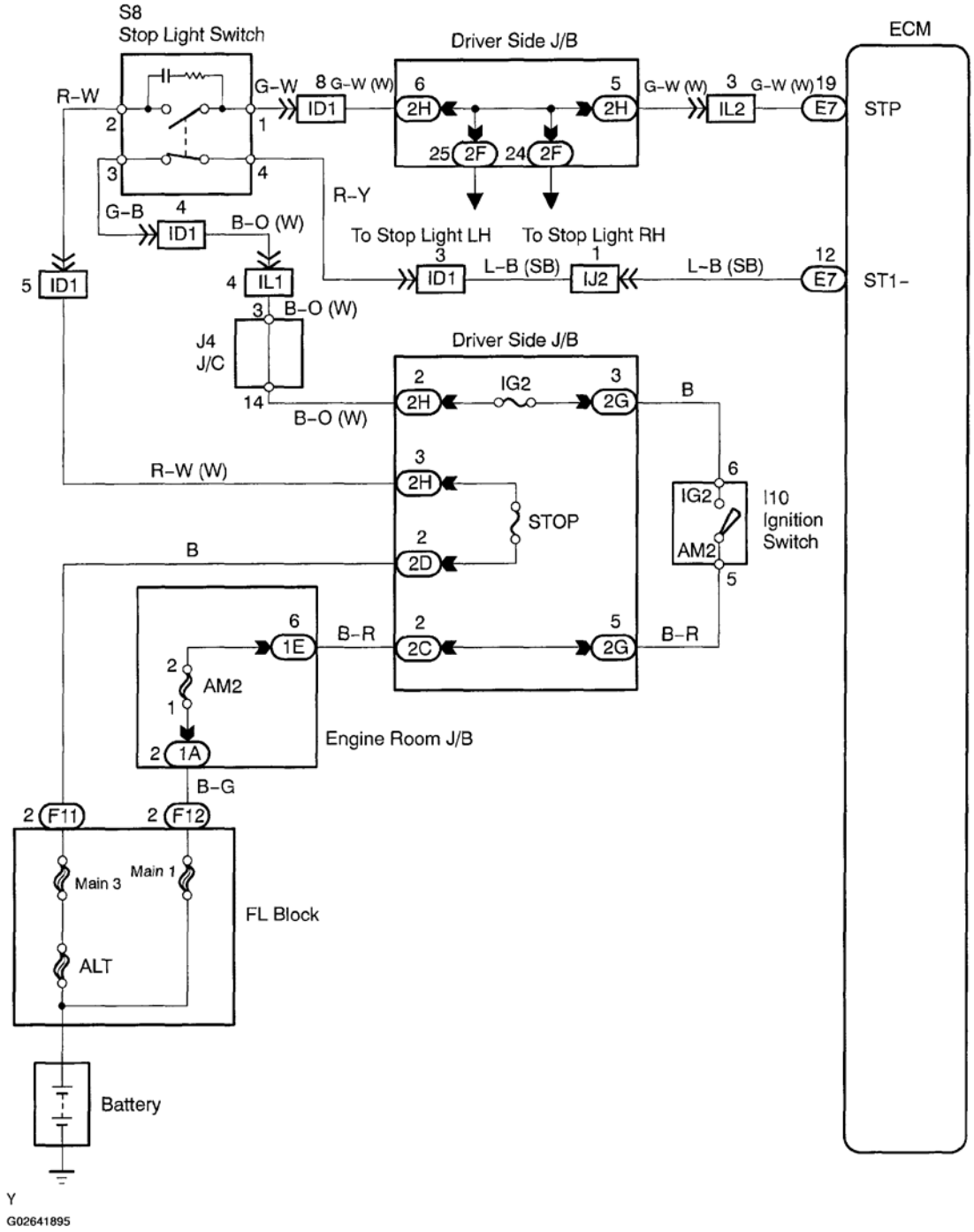

Fig. 197: Wiring Diagram - Brake Switch Circuit
Courtesy of TOYOTA MOTOR SALES, U.S.A., INC.

INSPECTION PROCEDURE

HINT:

cardiagn.com

Read freeze frame data using the hand-held tester or the OBD II scan tool. Freeze frame data records the engine conditions when a malfunction is detected. When troubleshooting, freeze frame data can help determine if the vehicle was running or stopped, if the engine was warmed up or not, if the air-fuel ratio was lean or rich, and other data from the time the malfunction occurred.

Hand-held tester:

1. **Check operation of stop light.**

   CHECK:

   Check if the stop lights turn ON and OFF normally when the brake pedal is depressed and released.

   NG: Check and repair stop light circuit.
   OK: Go To Next Step
2. **Check stop light switch (see INSPECTION).**
   NG: Replace stop light switch.
   OK: Go To Next Step
3. **Check STP and ST1 - voltage.**

   PREPARATION:

   a. Connect the hand-held tester to the DLC3.
   b. Turn ON the ignition switch. Push the hand-held tester main switch.
   c. Enter the following menus: DIAGNOSIS / ENHANCED OBD II / DATA LIST / ALL / STOP LIGHT SW.

   CHECK:

   a. Read the STP signal on the hand-held tester.
   b. Check the voltage between terminal STP and ST1 - of the ECM connector and body ground.

   OK:

   ECM CONNECTOR TERMINALS VOLTAGE

Brake Pedal	STP Signal	ST1 - Terminal Voltage
Depressed	ON	Below 1.5 V
Released	OFF	7.5 to 14 V

cardiagn.com

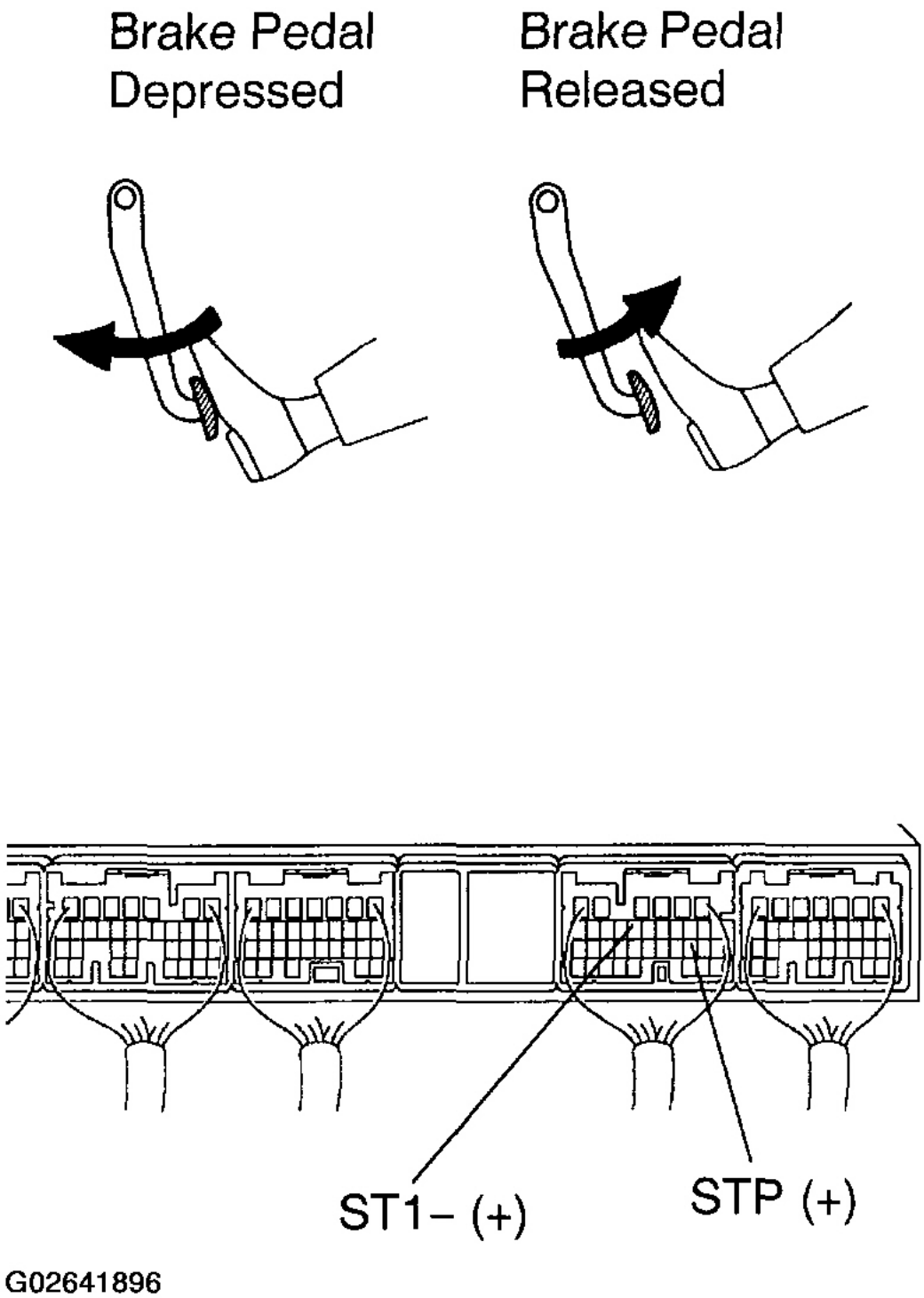

Fig. 198: Testing Stop Light Switch Function At ST1 & STP ECM Terminals

cardiagn.com

Courtesy of TOYOTA MOTOR SALES, U.S.A., INC.

OK: Check for intermittent problems (see PRE-CHECK).

NG: Go To Next Step

4. **Check for wire harness between ECM and stop light switch (see HOW TO USE THE DIAGNOSTIC CHART AND INSPECTION PROCEDURE).**

   NG: Repair or replace harness and connector.

   OK: Replace ECM (see ENGINE CONTROL MODULE (ECM)).

OBD II scan tool (excluding hand-held tester):

1. **Check operation of stop light.**

   CHECK:

   Check if the stop lights turn ON and OFF normally when the brake pedal is depressed and released.

   NG: Repair stop light circuit.

   OK: Go To Next Step

2. **Check stop light switch (see INSPECTION).**

   NG: Replace stop light switch.

   OK: Go To Next Step

3. **Check STP and ST1 - voltage.**

   PREPARATION:

   a. Turn the ignition switch ON.

   CHECK:

   a. Check the voltage between terminal STP and ST1 - of the ECM connector and body ground.

   OK:

   ECM CONNECTOR TERMINALS VOLTAGE

Brake Pedal	STP Terminal Voltage	ST1 - Terminal Voltage
Depressed	7.5 to 14 V	Below 1.5 V
Released	Below 1.5 V	7.5 to 14 V

cardiagn.com

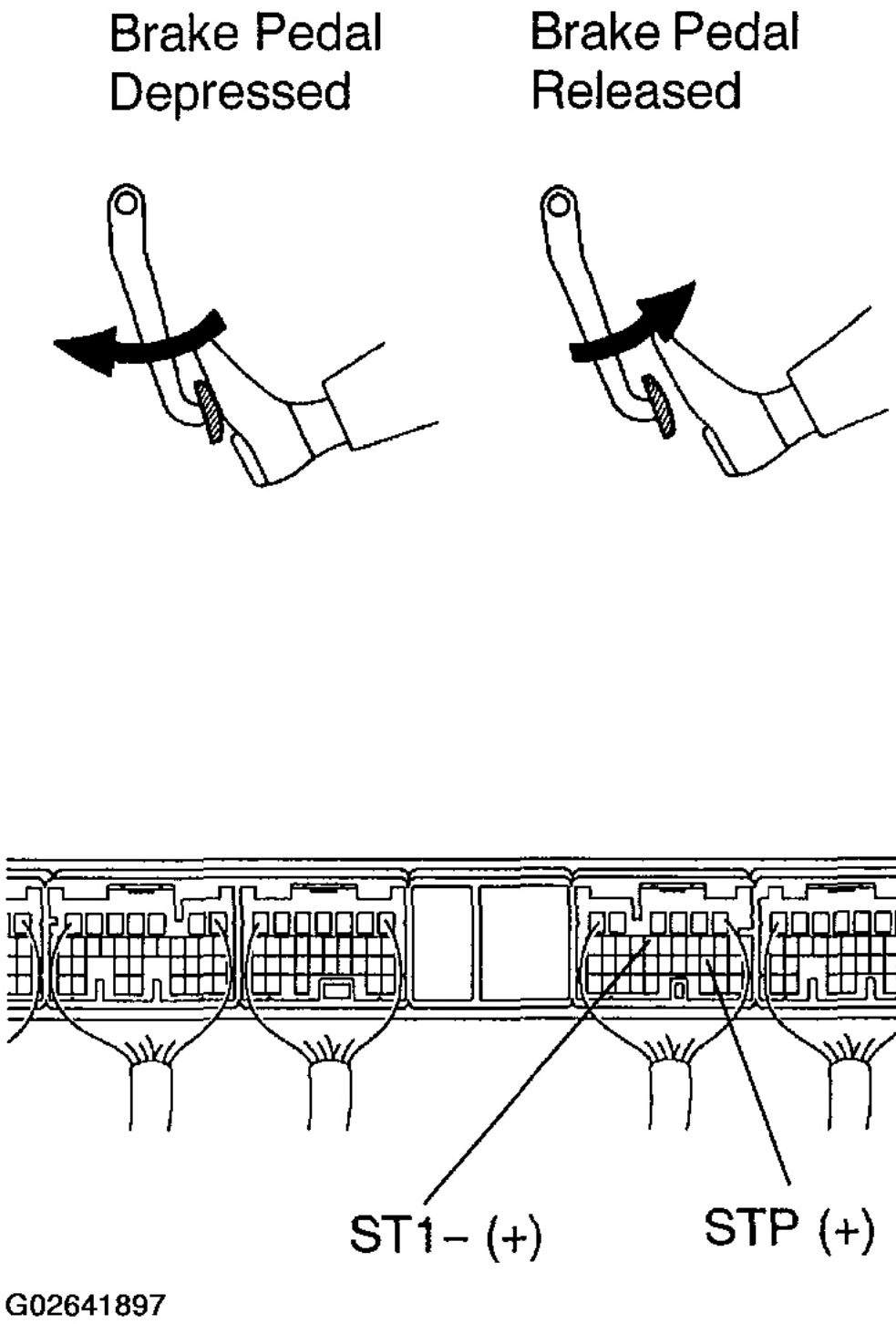

Fig. 199: Testing Stop Light Switch Function At ST1 & STP ECM Terminals

cardiagn.com

Courtesy of TOYOTA MOTOR SALES, U.S.A., INC.

OK: Check for intermittent problems (see PRE-CHECK).

NG: Go To Next Step

4. **Check for wire harness between ECM and stop light switch (see HOW TO USE THE DIAGNOSTIC CHART AND INSPECTION PROCEDURE).**

   NG: Repair or replace harness and connector.

   OK: Replace ECM (see ENGINE CONTROL MODULE (ECM)).

DTC P0505: IDLE AIR CONTROL SYSTEM

MONITOR DESCRIPTION

The idle speed is controlled by the Electronic Throttle Control System (ETCS).

The ETCS is composed of the throttle actuator which operates the throttle valve, and the throttle position sensor which detects the opening angle of the throttle valve.

The ECM controls the throttle actuator to provide the proper throttle valve opening angle to obtain the target idle speed.

The ECM regulates the idle speed by opening and closing the throttle valve using the ETCS. The ECM concludes that the idle speed control ECM function is malfunctioning if: 1) the actual idle RPM varies more than the specified amount 5 times or more during a drive cycle, or 2) a learned value of the idle speed control remains at the maximum or minimum 5 times or more during a drive cycle. The ECM will turn on the MIL and set a DTC.

Example:

If the actual idle RPM varies from the target idle RPM by more than 200 (*1) RPM 5 times during a drive cycle, the ECM will turn on the MIL and a DTC is set.

HINT:

*1: RPM threshold varies with engine load.

cardiagn.com

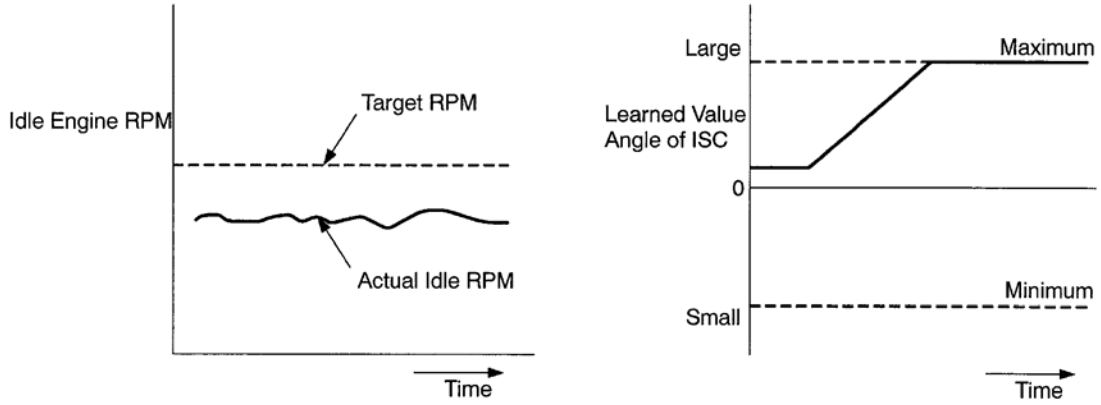

Y
G02641898

Fig. 200: Idle Speed Graph
Courtesy of TOYOTA MOTOR SALES, U.S.A., INC.

DTC No.	DTC Detection Condition	Trouble Area
P0505	Idle speed continues to vary greatly from target speed (2 trip detection logic)	• Electric throttle control system • Air induction system • PCV hose connection

G02641899

Fig. 201: DTC P0505 - DTC Detection Condition Chart
Courtesy of TOYOTA MOTOR SALES, U.S.A., INC.

MONITOR STRATEGY

MONITOR STRATEGY

Related DTCs	P0505: IAC functional check P0505: IAC range check
Required sensors / components (Main)	ETCS
Required sensors / components (Related)	CKP sensor, ECT sensor and VSS
Frequency of operation	Continuous
Duration	10 min: IAC functional check 10 sec.: IAC range check
MIL operation	2 driving cycles: IAC functional check Immediate: IAC range check
Sequence of operation	None

TYPICAL ENABLING CONDITIONS

cardiagn.com

TYPICAL ENABLING CONDITIONS

The monitor will run whenever the following DTCs are not present	See **PRE-CHECK**

IAC Functional Check:

TYPICAL ENABLING CONDITIONS (IAC FUNCTIONAL CHECK)

Battery voltage	11 V or more
ECT	75°C (167°F)
Idle	ON
Vehicle speed	Within 2 mph (3 km/h)
Engine RPM	400 rpm or more

IAC Range Check:

TYPICAL ENABLING CONDITIONS (IAC RANGE CHECK)

IAC output duty ratio	10 to 90%
Battery voltage	10 V

TYPICAL MALFUNCTION THRESHOLDS

IAC Functional Check:

TYPICAL MALFUNCTION THRESHOLDS (IAC FUNCTIONAL CHECK)

Both of the conditions 1 and 2 are met	
1. Either of the conditions A or B is met	
Condition A	Both of the following conditions (a) and (b) are met
(a) Engine RPM - Target engine RPM	Less than - 100 rpm
(b) IAC flow rate learning value	2.78 L/sec. (A/C: ON) 2.08 L/sec. (A/C: OFF)
Condition B	Both of the following conditions (c) and (d) are met
(c) Engine RPM - Target engine RPM	More than 150 rpm (shift position: N and A/C: ON) More than 200 rpm (shift position: D and A/C: OFF)
(d) IAC flow rate learning value	0.55 L/sec. (shift position: N and A/C: ON) -0.17 L/sec. (shift position: D and A/C: OFF)
2. Either of the conditions C or D is met	
Condition C	
IAC flow rate learning value for 0.5 sec.	Below 1.3 L/sec, or above 4.51 L/sec.
Condition D	Both of the following conditions (e) and (f) are met
(e) Number of the following condition is met	5 times
(f) IAC flow rate learning value	"Value when fail is judged first" +1.55 L/sec. "Value when fail is judged first" -2.4 L/sec.

IAC Range Check:

cardiagn.com

TYPICAL MALFUNCTION THRESHOLDS (IAC RANGE CHECK)

IAC duty ratio change	None

INSPECTION PROCEDURE

HINT:

Read freeze frame data using the hand-held tester or the OBD II scan tool. Freeze frame data records the engine conditions when a malfunction is detected. When troubleshooting, freeze frame data can help determine if the vehicle was running or stopped, if the engine was warmed up or not, if the air-fuel ratio was lean or rich, and other data from the time the malfunction occurred.

1. **Are there any other codes (besides P0505) being output?**

   HINT:

   If any other codes besides P0505 are output, perform the troubleshooting for those DTCs first.

   YES: Go to relevant DTC chart (see DIAGNOSTIC TROUBLE CODE CHART).
   NO: Go To Next Step
2. **Check connection of PCV hose.**
   NG: Repair or replace PCV hose.
   OK: Go To Next Step
3. **Check air induction system (see SFI SYSTEM).**

   CHECK:

   Check for vacuum leaks in air induction system.

   NG: Repair or replace.
   OK: Check ETCS (see THROTTLE BODY).

DTC P0560: SYSTEM VOLTAGE

MONITOR DESCRIPTION

The battery supplies electricity to the ECM even when the ignition switch is OFF. This electricity allows the ECM to store data such as DTC history, freeze frame data, fuel trim values and other data. If the battery voltage falls below a minimum level, the ECM will conclude that there is a fault in the power supply circuit. The next time the engine starts, the ECM will turn on the MIL and a DTC will be set.

cardiagn.com

DTC No.	DTC Detection Condition	Trouble Area
P0560	Open in back-up power source circuit	•Open in back-up power source circuit •ECM

G02641900

Fig. 202: DTC P0560 - DTC Detection Condition Chart
Courtesy of TOYOTA MOTOR SALES, U.S.A., INC.

HINT:

If DTC P0560 appears, the ECM does not store another DTCs.

MONITOR STRATEGY

MONITOR STRATEGY

Related DTCs	P0560: ECM system voltage
Required sensors / components (Main)	ECM
Required sensors / components (Related)	
Frequency of operation	Continuous
Duration	3 sec.
MIL operation	Immediate (MIL will illuminate after the next engine start)
Sequence of operation	None

TYPICAL ENABLING CONDITIONS

TYPICAL ENABLING CONDITIONS

The monitor will run whenever the following DTCs are not present	None

TYPICAL MALFUNCTION THRESHOLDS

TYPICAL MALFUNCTION THRESHOLDS

ECM power source	Less than 3.5 V

WIRING DIAGRAM

cardiagn.com

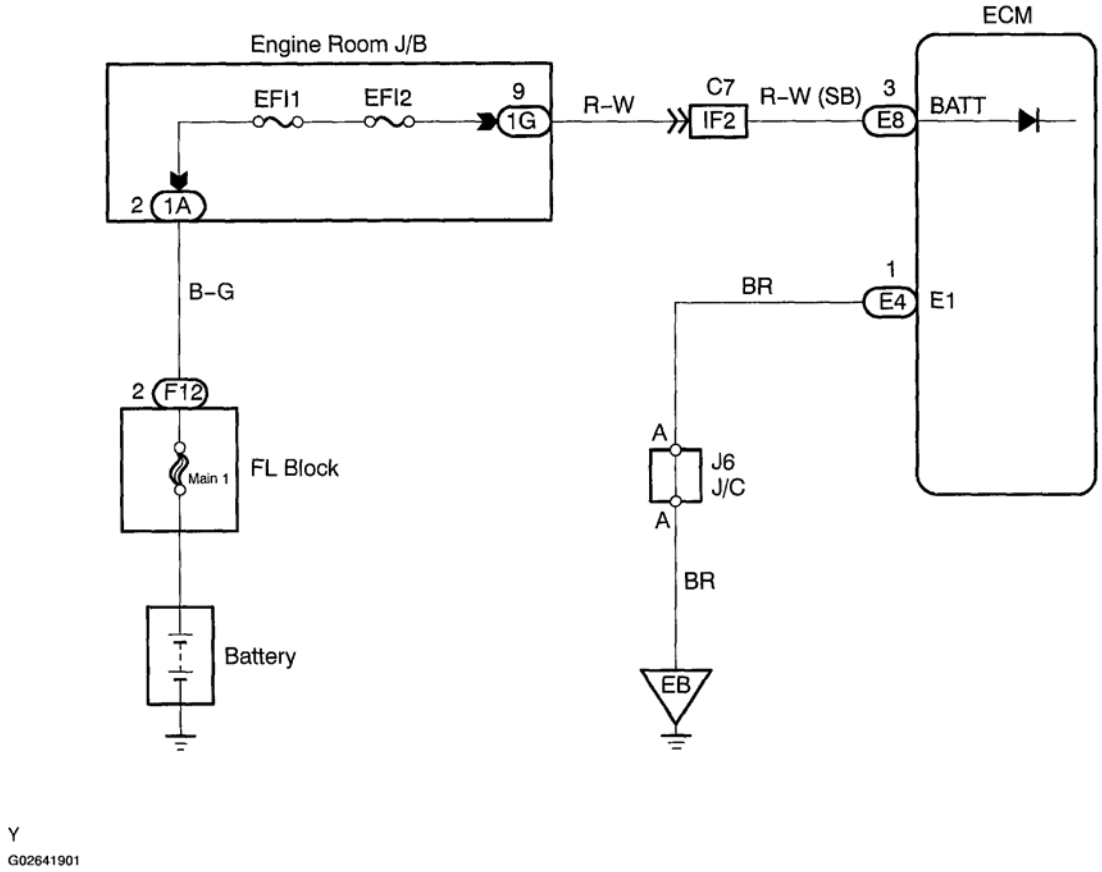

Fig. 203: Wiring Diagram - ECM Power Source
Courtesy of TOYOTA MOTOR SALES, U.S.A., INC.

INSPECTION PROCEDURE

HINT:

Read freeze frame data using the hand-held tester or the OBD II scan tool. Freeze frame data records the engine conditions when a malfunction is detected. When troubleshooting, freeze frame data can help determine if the vehicle was running or stopped, if the engine was warmed up or not, if the air-fuel ratio was lean or rich, and other data from the time the malfunction occurred.

1. **Check EFI1 and EFI2 fuse.**

   PREPARATION:

   Remove the EFI1 and 2 fuses from the engine room J/B.

   CHECK:

   Check the resistance of the EFI1 and 2 fuses.

cardiagn.com

OK:

Resistance: Below 1 ohm

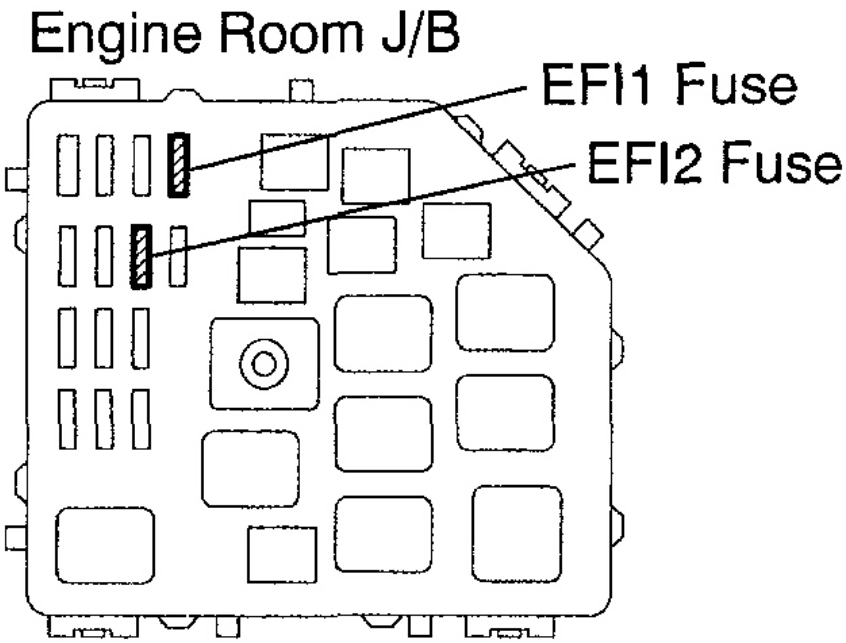

P

G02641902

Fig. 204: Identifying EFI1 & EFI2 Fuse
Courtesy of TOYOTA MOTOR SALES, U.S.A., INC.

NG: Replace fuse.
OK: Go To Next Step

2. **Check voltage between terminal BATT of ECM connector and body ground.**

PREPARATION:

Remove the glove compartment (see **ENGINE CONTROL MODULE (ECM)**).

CHECK:

Measure the voltage between terminal BATT of the ECM connector and body ground.

OK:

cardiagn.com

Voltage: 9 to 14 V

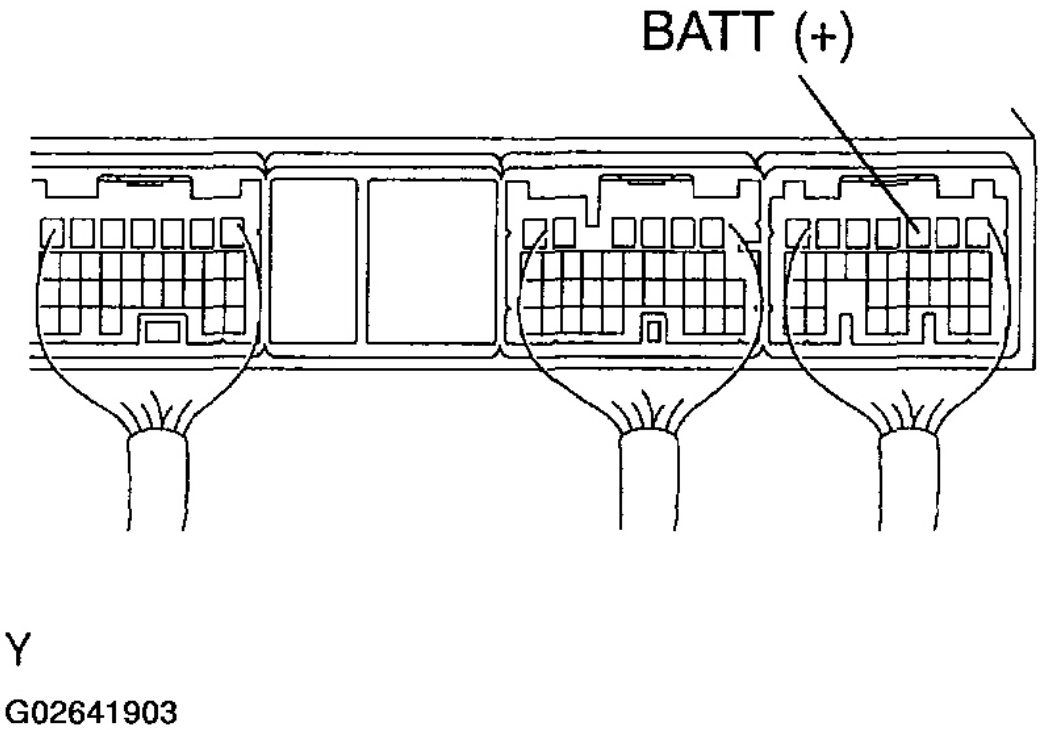

Fig. 205: Identifying Terminal BATT Of ECM Connector
Courtesy of TOYOTA MOTOR SALES, U.S.A., INC.

OK: Replace ECM (see ENGINE CONTROL MODULE (ECM)).

NG: Go To Next Step

3. **Check for open in wire harness between ECM and battery.**

   NG: Repair or replace harness and connector.

   OK: Check and replace engine room J/B.

DTC P0604, P0606, P0607, P0657: INTERNAL CONTROL MODULE RANDOM ACCESS MEMORY (RAM) ERROR, ECM/PCM PROCESSOR, CONTROL MODULE PERFORMANCE & ACTUATOR SUPPLY VOLTAGE CIRCUIT/OPEN

MONITOR DESCRIPTION

The ECM continuously monitors it's internal memory status, internal circuits, and output signals to the throttle actuator. This self-check insures that the ECM is functioning properly. If any malfunction is detected, the ECM will set the appropriate DTC and illuminate the MIL.

cardiagn.com

The ECM memory status is diagnosed by internal "mirroring" of the main CPU and the sub CPU to detect random access memory (RAM) errors. The two CPUs also perform continuous mutual monitoring. The ECM sets a DTC if: 1) outputs from the 2 CPUs are different and deviate from the standards, 2) the signals to the throttle actuator deviate from the standards, 3) a malfunction is found in the throttle actuator supply voltage, and 4) any other ECM malfunction is found.

DTC No.	DTC Detection Condition	Trouble Area
P0604 P0606 P0607 P0657	ECM internal error (1 trip detection logic)	• ECM

G02641904

Fig. 206: DTC P0604, P0606, P0607 & P0657 - DTC Detection Condition Chart
Courtesy of TOYOTA MOTOR SALES, U.S.A., INC.

MONITOR STRATEGY

MONITOR STRATEGY

Related DTCs	P0604: RAM error P0606: CPU malfunction P0657: ETCS power supply
Required sensors / components (Main)	ECM
Required sensors / components (Related)	-
Frequency of operation	Continuous
Duration	Within 1 sec.
MIL operation	Immediate
Sequence of operation	None

TYPICAL ENABLING CONDITIONS

TYPICAL ENABLING CONDITIONS

The monitor will run whenever the following DTCs are not present	None

TYPICAL MALFUNCTION THRESHOLDS

RAM Error (P0604):

TYPICAL MALFUNCTION THRESHOLDS (RAM ERROR (P0604))

Difference between main and sub CPU output	Larger than the specified range

CPU Malfunction (P0606):

TYPICAL MALFUNCTION THRESHOLDS (CPU MALFUNCTION (P0606))

Either of the following condition is met:	

cardiagn.com

Difference between TP of main CPU and TP of sub CPU	0.3 V or more
Difference between APP of main CPU and APP of sub CPU	0.3 V or more

ETCS Power Supply (P0657):

TYPICAL MALFUNCTION THRESHOLDS (ETCS POWER SUPPLY (P0657))

ETCS power supply when ignition switch OFF to ON	7 V or more

INSPECTION PROCEDURE

HINT:

Read freeze frame data using the hand-held tester or the OBD II scan tool. Freeze frame data records the engine conditions when a malfunction is detected. When troubleshooting, freeze frame data can help determine if the vehicle was running or stopped, if the engine was warmed up or not, if the air-fuel ratio was lean or rich, and other data from the time the malfunction occurred.

Replace ECM (see ENGINE CONTROL MODULE (ECM)).

DTC P0617: STARTER RELAY CIRCUIT HIGH

MONITOR DESCRIPTION

While the engine is being cranked, the positive battery voltage is applied to terminal STA of the ECM.

If the vehicle is being driven and the ECM detects the starter control signal (STA), the ECM concludes that the starter control circuit is malfunctioning. The ECM will turn on the MIL and a DTC is set.

DTC No.	DTC Detection Condition	Trouble Area
P0617	When all conditions (a), (b) and (c) are met and the battery (+B) voltage 10.5 V or more is applied for 20 seconds: (a) Vehicle speed greater than 20 km/h (12 mph) (b) Engine revolution greater than 1,000 rpm (c) STA signal ON	•Short in PNP switch (A/T) or clutch start switch (M/T) •PNP switch (A/T) •Clutch start switch (M/T) •Ignition switch •ECM

G02641905

Fig. 207: DTC P0617 - DTC Detection Condition Chart
Courtesy of TOYOTA MOTOR SALES, U.S.A., INC.

MONITOR STRATEGY

MONITOR STRATEGY

Related DTCs	P0617: Starter signal
Required sensors / components (Main)	Starter relay and PNP switch
Required sensors / components (Related)	CKP sensor and vehicle speed sensor
Frequency of operation	Continuous

cardiagn.com

Duration	20 sec.
MIL operation	Immediate
Sequence of operation	None

TYPICAL ENABLING CONDITIONS

TYPICAL ENABLING CONDITIONS

The monitor will run whenever the following DTCs are not present	None
Battery voltage	10.5 V or more
Vehicle speed	12 mph (20 km/h) or more
Engine RPM	1,000 rpm or more

TYPICAL MALFUNCTION THRESHOLDS

TYPICAL MALFUNCTION THRESHOLDS

Starter signal	ON

WIRING DIAGRAM

cardiagn.com

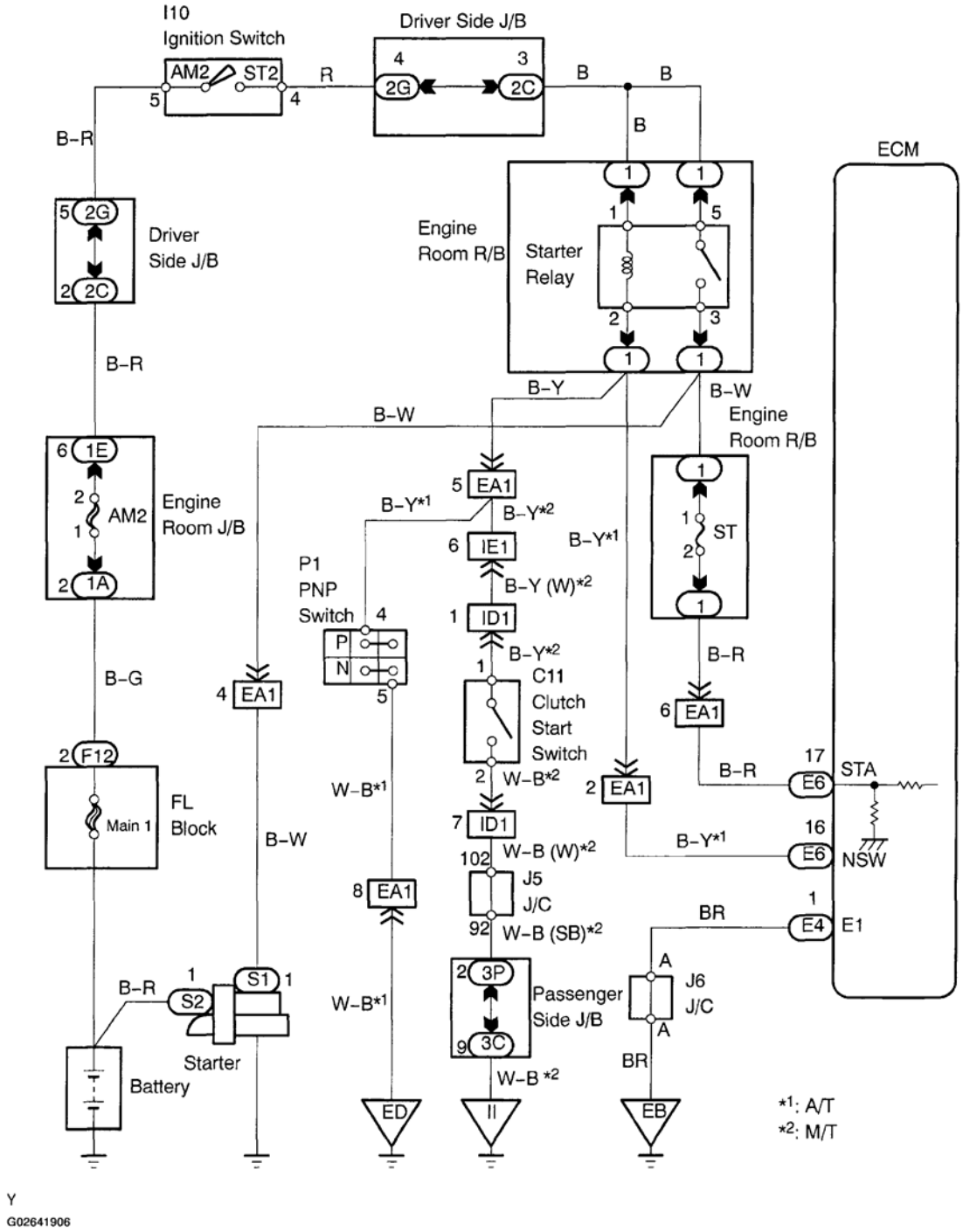

Fig. 208: Wiring Diagram - Starter Relay Circuit
Courtesy of TOYOTA MOTOR SALES, U.S.A., INC.

INSPECTION PROCEDURE

HINT:

cardiagn.com

Read freeze frame data using the hand-held tester or the OBD II scan tool. Freeze frame data records the engine conditions when a malfunction is detected. When troubleshooting, freeze frame data can help determine if the vehicle was running or stopped, if the engine was warmed up or not, if the air-fuel ratio was lean or rich, and other data from the time the malfunction occurred.

Hand-held tester:

1. **Connect hand-held tester and check STA signal.**

   PREPARATION:

   a. Connect the hand-held tester to the DLC3.
   b. Turn ON the ignition switch. Push the hand-held tester main switch.
   c. On the hand-held tester, enter the following menus: DIAGNOSIS / ENHANCED OBD II / DATA LIST / ALL / STARTER SIG.

   CHECK:

   Read the STA signal on the hand-held tester while the starter operates.

   OK:

   IGNITION SWITCH POSITION AND STA SIGNAL DETAIL

Ignition Switch Position	ON	START
STA signal	OFF	ON

   OK: Replace ECM (see ENGINE CONTROL MODULE (ECM)).

   NG: Go To Next Step

2. **Check PNP switch (A/T) (see DTC P0705: TRANSMISSION RANGE SENSOR CIRCUIT MALFUNCTION (PRNDL INPUT)) or clutch start switch (M/T) (see CLUTCH PEDAL).**

   NG: Replace PNP switch or clutch start switch.

   OK: Go To Next Step

3. **Connect hand-held tester and check STA signal.**

   PREPARATION:

   a. Connect the hand-held tester to the DLC3.
   b. Turn ON the ignition switch. Push the hand-held tester main switch.
   c. On the hand-held tester, enter the following menus: DIAGNOSIS / ENHANCED OBD II / DATA LIST / ALL / STARTER SIG.

   CHECK:

   Read the STA signal on the hand-held tester while the starter operates.

cardiagn.com

OK:

IGNITION SWITCH POSITION AND STA SIGNAL DETAIL

Ignition Switch Position	ON	START
STA signal	OFF	ON

OK: System OK.

NG: Go To Next Step

4. **Check ignition switch (see INSPECTION).**

NG: Replace ignition switch.

OK: Go To Next Step

5. **Connect hand-held tester and check STA signal.**

PREPARATION:

a. Connect the hand-held tester to the DLC3.
b. Turn ON the ignition switch. Push the hand-held tester main switch ON.
c. On the hand-held tester, enter the following menus: DIAGNOSIS / ENHANCED OBD II / DATA LIST / ALL / STARTER SIG.

CHECK:

Read the STA signal on the hand-held tester while the starter operates.

OK:

IGNITION SWITCH POSITION AND STA SIGNAL DETAIL

Ignition Switch Position	ON	START
STA signal	OFF	ON

OK: System OK.

NG: Repair or replace harness and connector.

OBD II scan tool (excluding hand-held tester):

1. **Check voltage between terminal STA of ECM connector and body ground.**

PREPARATION:

a. Remove the glove compartment (see **ENGINE CONTROL MODULE (ECM)**).
b. Turn the ignition switch ON.

CHECK:

cardiagn.com

Measure the voltage between terminal STA of the ECM connector and the body ground, during the engine cranking (ignition switch START position) and does not engine cranking (ignition switch position ON).

OK:

Voltage:

6 V or more (ignition switch START position)

0 V (ignition switch ON position)

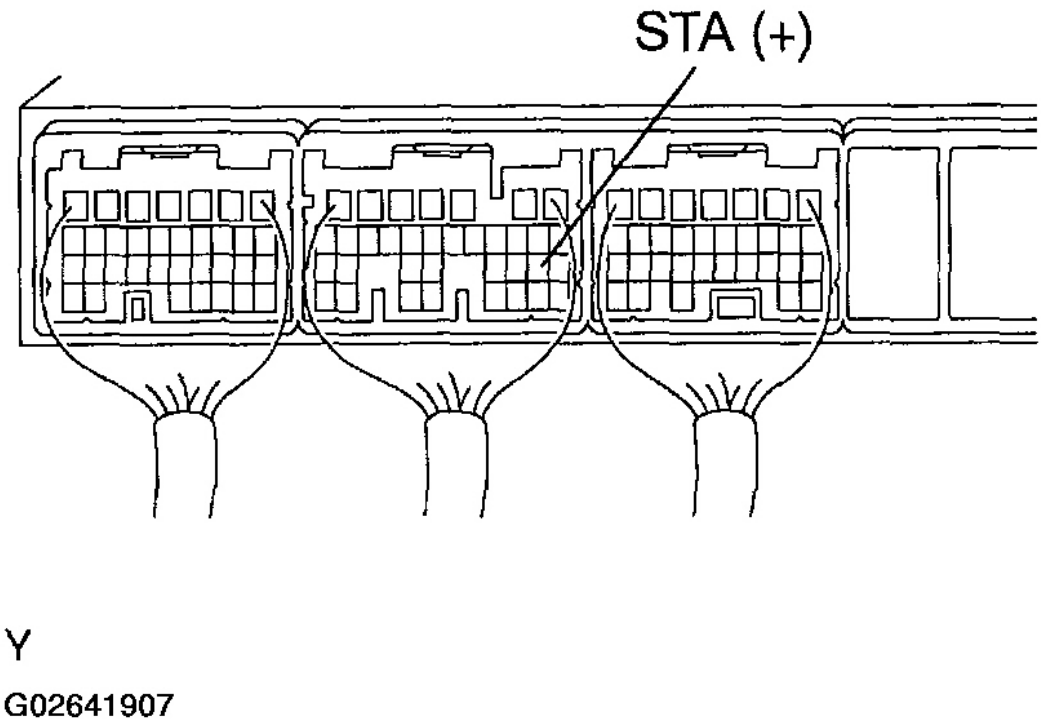

Fig. 209: Identifying Terminal STA Of ECM Connector
Courtesy of TOYOTA MOTOR SALES, U.S.A., INC.

OK: Replace ECM (see ENGINE CONTROL MODULE (ECM)).

NG: Go To Next Step

2. **Check PNP switch (A/T) (see DTC P0705 TRANSMISSION RANGE SENSOR CIRCUIT MALFUNCTION (PRNDL INPUT)) or clutch start switch (M/T) (see CLUTCH PEDAL).**

NG: Replace PNP switch or clutch start switch.

OK: Go To Next Step

cardiagn.com

3. **Check voltage between terminal STA of ECM connector and body ground.**

PREPARATION:

a. Remove the glove compartment (see **ENGINE CONTROL MODULE (ECM)**).
b. Turn the ignition switch ON.

CHECK:

Measure the voltage between terminal STA of the ECM connector and the body ground, during the engine cranking (ignition switch START position) and does not engine cranking (ignition switch position ON).

OK:

Voltage:

6 V or more (ignition switch START position)

0 V (ignition switch ON position)

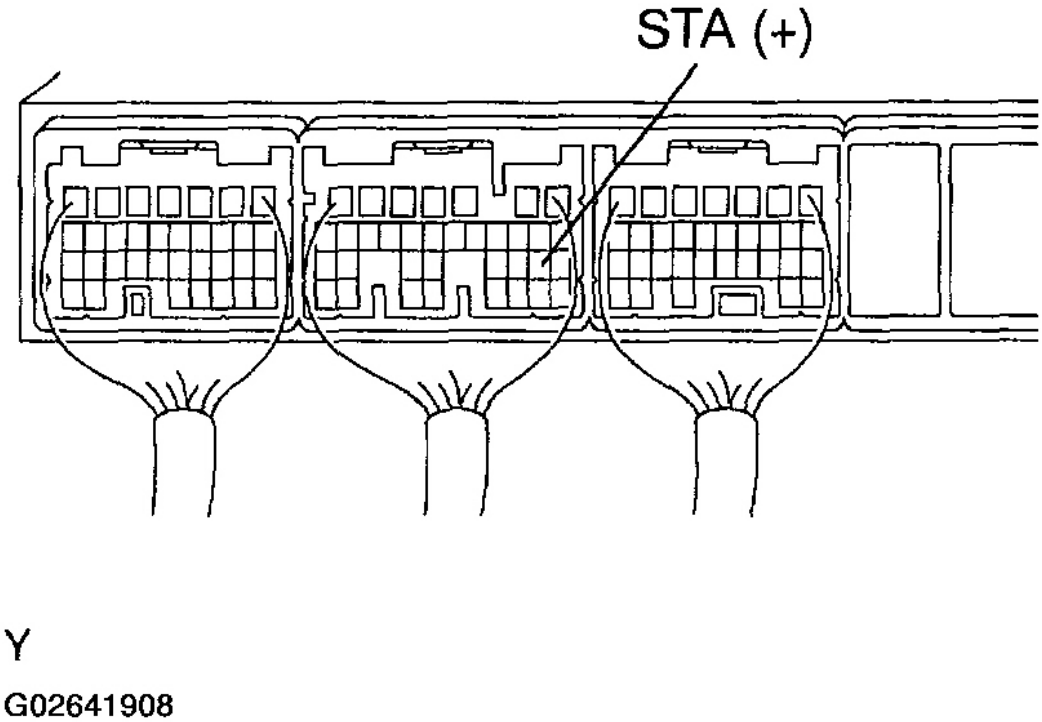

cardiagn.com

Fig. 210: Identifying Terminal STA Of ECM Connector (1 Of 2)
Courtesy of TOYOTA MOTOR SALES, U.S.A., INC.

OK: Replace ECM (see ENGINE CONTROL MODULE (ECM)).

NG: Go To Next Step

4. **Check ignition switch (see INSPECTION).**

   NG: Replace ignition switch.

   OK: Go To Next Step

5. **Check voltage between terminal STA of ECM connector and body ground.**

PREPARATION:

a. Remove the glove compartment (see **ENGINE CONTROL MODULE (ECM)**).
b. Turn the ignition switch ON.

CHECK:

Measure the voltage between terminal STA of the ECM connector and the body ground, during the engine cranking (ignition switch START position) and does not engine cranking (ignition switch position ON).

OK:

Voltage:

6 V or more (ignition switch START position)

0 V (ignition switch ON position)

cardiagn.com

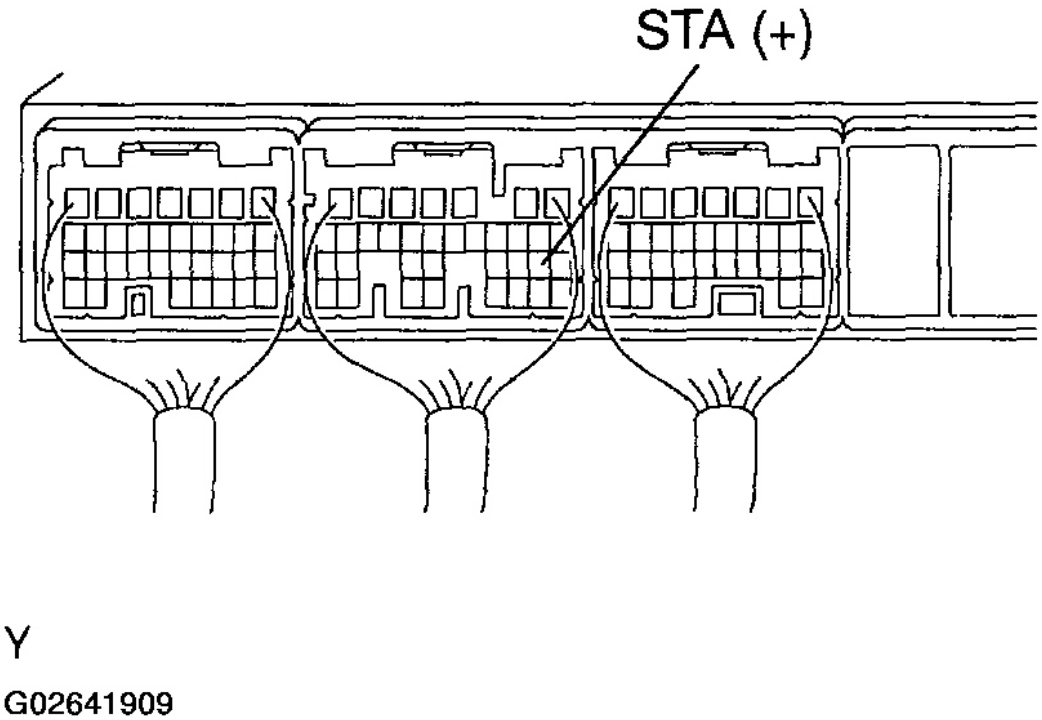

Fig. 211: Identifying Terminal STA Of ECM Connector (2 Of 2)
Courtesy of TOYOTA MOTOR SALES, U.S.A., INC.

OK: Replace ECM (see ENGINE CONTROL MODULE (ECM)).

NG: Go To Next Step

6. **Check for open in wire harness between ECM and PNP switch (A/T) (see DTC P0705 TRANSMISSION RANGE SENSOR CIRCUIT MALFUNCTION (PRNDL INPUT)) or clutch start switch (M/T) (see HOW TO USE THE DIAGNOSTIC CHART AND INSPECTION PROCEDURE).**

   NG: Repair or replace harness and connector.

   OK: Replace ECM (see ENGINE CONTROL MODULE (ECM)).

DTC P0630: VIN NOT PROGRAMMED OF MISMATCH - ECM/PCM

CIRCUIT DESCRIPTION

DTC P0630 is set when the Vehicle Identification Number (VIN) is not stored in the Engine Control Module (ECM) or the input VIN is incorrect. Input the VIN with the hand-held tester.

cardiagn.com

DTC No.	DTC Detection Conditions	Trouble Areas
P0630	• VIN is not stored in ECM • Input VIN in ECM is incorrect	• ECM

G02641910

Fig. 212: DTC P0630 - DTC Detection Condition Chart
Courtesy of TOYOTA MOTOR SALES, U.S.A., INC.

MONITOR STRATEGY

MONITOR STRATEGY

Related DTCs	P0630: VIN not programmed
Required sensors / components (Main)	ECM
Required sensors / components (Related)	---
Frequency of operation	Continuous
Duration	0.5 seconds x 5 times
MIL operation	Immediate
Sequence of operation	None

TYPICAL ENABLING CONDITIONS

TYPICAL ENABLING CONDITIONS

The monitor will run whenever the following DTCs are not present	See "List of disable a monitor" (on **PRE-CHECK**)
Battery voltage	8 V or more
Ignition switch	ON
Starter	OFF

TYPICAL MALFUNCTION THRESHOLDS

TYPICAL MALFUNCTION THRESHOLDS

VIN code	Not programmed

COMPONENT OPERATING RANGE

COMPONENT OPERATING RANGE

VIN code	Programmed

INSPECTION PROCEDURE

1. **Read current DTC.**

   PREPARATION:

cardiagn.com

a. Connect the hand-held tester to the DLC3.
b. Turn the ignition switch to ON and turn the hand-held tester ON.
c. Select the following menu items: DIAGNOSIS / ENHANCED OBD II / DTC INFO / CURRENT CODES.

CHECK:

Read DTCs.

RESULT:

DTC OUTPUT

Display (DTC output)	Proceed To
P0630	A
P0630 and other DTCs	B

NOTE: **If P0630 is present, the VIN must be input to the ECM using the hand-held tester. However, all DTCs are cleared automatically when the VIN is input. If any DTCs other than P0630 are present, troubleshoot them first.**

B: Go to DTC chart (See DIAGNOSTIC TROUBLE CODE CHART).

A: Go To Next Step

2. **Input VIN using the hand-held tester (see PRE-CHECK).**

NEXT: END

DTC P0705: TRANSMISSION RANGE SENSOR CIRCUIT MALFUNCTION (PRNDL INPUT)

CIRCUIT DESCRIPTION

When the shift lever is in the N or P position: 1) the PNP switch turns on, and 2) ECM terminal NSW is grounded to the body ground via the starter relay and voltage becomes 0 V. When the shift lever is in the D, 2, L or R position: 1) the PNP switch turns off, and 2) ECM terminal NSW receives current and becomes the voltage of the ECM internal power source.

If the shift lever is moved from the N position to the D position, this signal is used for air-fuel ratio correction and for idle speed control (estimated control).

DTC No.	DTC Detection Condition	Trouble Area
P0705	2 or more switches are ON simultaneously at R, N, D, 2, and L positions (2 trip detection logic)	• Short in PNP switch circuit • PNP switch • ECM

G02641911

Fig. 213: DTC P0705 - DTC Detection Condition Chart
Courtesy of TOYOTA MOTOR SALES, U.S.A., INC.

cardiagn.com

HINT:

After confirming DTC P0705, use the hand-held tester to confirm the PNP switch signal in the ALL menu (to reach the ALL menu: DIAGNOSIS / ENHANCED OBD II / DATA LIST / ALL).

WIRING DIAGRAM

Refer to "WIRING DIAGRAM" under **DTC P0705 TRANSMISSION RANGE SENSOR CIRCUIT MALFUNCTION (PRNDL INPUT)**).

INSPECTION PROCEDURE

Refer to "INSPECTION PROCEDURE" under **DTC P0705 TRANSMISSION RANGE SENSOR CIRCUIT MALFUNCTION (PRNDL INPUT)**).

HINT:

Read freeze frame data using the hand-held tester or the OBD II scan tool. Freeze frame data records the engine conditions when a malfunction is detected. When troubleshooting, freeze frame data can help determine if the vehicle was running or stopped, if the engine was warmed up or not, if the air-fuel ratio was lean or rich, and other data from the time the malfunction occurred.

DTC P2102, P2103: THROTTLE ACTUATOR CONTROL MOTOR CIRCUIT LOW/HIGH

CIRCUIT DESCRIPTION

The throttle actuator is operated by the ECM and it opens and closes the throttle valve.

The opening angle of the throttle valve is detected by the throttle position sensor which is mounted on the throttle body. The throttle position sensor provides feedback to the ECM. This feedback allows the ECM to control the throttle actuator and monitor the throttle opening angle as the ECM responds to driver inputs.

HINT:

This Electronic Throttle Control System (ETCS) does not use a throttle cable.

DTC No.	DTC Detection Condition	Trouble Area
P2102	Conditions (a) and (b) continue for 2.0 seconds: (a) Throttle actuator output duty 80 % or more (b) Throttle actuator current 0.5 A or less	• Open in throttle actuator circuit • Throttle actuator • ECM
P2103	Either of following conditions is met • Throttle actuator current 10 A or more (0.1 seconds) • Throttle actuator current 7 A or more (0.6 seconds)	• Short in throttle actuator circuit • Throttle actuator • Throttle valve • Throttle body • ECM

G02641912

Fig. 214: DTC P2102 & P2103 - DTC Detection Condition Chart

cardiagn.com

Courtesy of TOYOTA MOTOR SALES, U.S.A., INC.

MONITOR DESCRIPTION

The ECM monitors the flow of electrical current through the electronic throttle actuator, and detects malfunctions or open circuits in the throttle actuator based on the value of the electrical current. When the current deviates from the standard, the ECM concludes that there is a fault in the throttle actuator.

Or, if the throttle valve is not functioning properly (for example, stuck on), the ECM concludes that there is a fault and turns on the MIL and a DTC is set.

Example:

When the current is more than 10 A. Or the current is less than 0.5 A when the actuator driving duty ratio is more than 80 %. The ECM concludes that the current is out of the normal range, turns on the MIL and a DTC is set.

FAIL-SAFE

If the ETCS has a malfunction, the ECM cuts off current to the throttle actuator. The throttle control valve returns to a predetermined opening angle (approximately 16°) by the force of the return spring. The ECM then adjusts the engine output by controlling the fuel injection (intermittent fuel-cut) and ignition timing in accordance with the accelerator pedal opening angle to enable the vehicle to continue at a minimal speed. If the accelerator pedal is depressed firmly and slowly, the vehicle can be driven slowly.

If a "pass" condition is detected and then the ignition switch is turned OFF, the fail-safe operation will stop and the system will return to normal condition.

MONITOR STRATEGY

MONITOR STRATEGY

Related DTCs	P2102: Throttle actuator current (low current) P2103: Throttle actuator current (high current)
Required sensors / components (Main)	Throttle actuator
Required sensors / components (Related)	-
Frequency of operation	Continuous
Duration	2 sec.
MIL operation	Immediate
Sequence of operation	None

TYPICAL ENABLING CONDITIONS

TYPICAL ENABLING CONDITIONS

The monitor will run whenever the following DTCs are not present	None

P2102:

cardiagn.com

TYPICAL ENABLING CONDITIONS (P2102)

Electronic throttle actuator	ON
Throttle actuator duty ratio	80 % or more
Throttle actuator power supply	8 V or more

P2103:

TYPICAL ENABLING CONDITIONS (P2103)

Electronic throttle actuator	ON
Throttle actuator power supply	8 V or more

TYPICAL MALFUNCTION THRESHOLDS

P2102:

TYPICAL MALFUNCTION THRESHOLDS (P2102)

Throttle actuator current	Less than 0.5 A

P2103:

TYPICAL MALFUNCTION THRESHOLDS (P2103)

Either of the following conditions is set:	
Hybrid IC diagnosis signal	Fail (for 0.1 sec.)
Hybrid IC current limiter port	Fail (for 0.6 sec.)

WIRING DIAGRAM

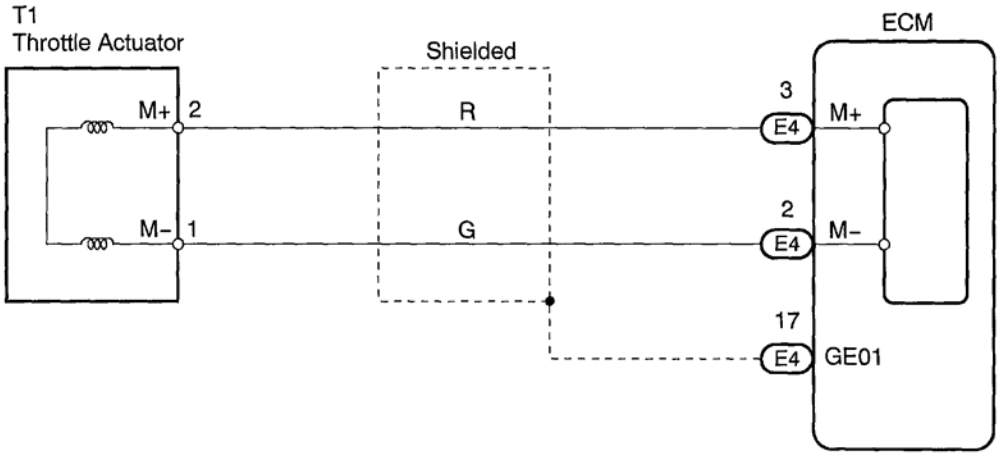

Y
G02641913

cardiagn.com

Fig. 215: Wiring Diagram - Throttle Actuator Control Motor
Courtesy of TOYOTA MOTOR SALES, U.S.A., INC.

INSPECTION PROCEDURE

HINT:

Read freeze frame data using the hand-held tester or the OBD II scan tool. Freeze frame data records the engine conditions when a malfunction is detected. When troubleshooting, freeze frame data can help determine if the vehicle was running or stopped, if the engine was warmed up or not, if the air-fuel ratio was lean or rich, and other data from the time the malfunction occurred.

1. **Check throttle body (throttle actuator) (see THROTTLE BODY).**
   NG: Replace throttle body.
   OK: Go To Next Step
2. **Check for open and short in wire harness between throttle actuator and ECM (see HOW TO USE THE DIAGNOSTIC CHART AND INSPECTION PROCEDURE).**
   NG: Repair or replace harness and connector.
   OK: Go To Next Step
3. **Inspect throttle body (Visually check throttle valve).**

   CHECK:

   a. Check for foreign objects between the throttle valve and the housing.
   b. Also, check if the valve can open and close smoothly.
   NG: Remove foreign objects and clean throttle body.
   OK: Replace ECM (see ENGINE CONTROL MODULE (ECM)).

DTC P2111, P2112: THROTTLE ACTUATOR CONTROL SYSTEM-STUCK OPEN/CLOSED

CIRCUIT DESCRIPTION

The throttle actuator is operated by the ECM and it opens and closes the throttle valve using gears. The opening angle of the throttle valve is detected by the throttle position sensor, which is mounted on the throttle body. The throttle position sensor provides feedback to the ECM to control the throttle actuator and set the throttle valve angle in response to driver inputs.

HINT:

This Electronic Throttle Control System (ETCS) dose not use a throttle cable.

cardiagn.com

DTC No.	DTC Detection Condition	Trouble Area
P2111	Throttle actuator locked during ECM order to close	• Throttle actuator circuit • Throttle actuator • Throttle body • Throttle valve
P2112	Throttle actuator locked during ECM order to open	• Same as DTC No. P2111

G02641914

Fig. 216: DTC P2111 & P2112 - DTC Detection Condition Chart
Courtesy of TOYOTA MOTOR SALES, U.S.A., INC.

MONITOR DESCRIPTION

The ECM concludes that there is a malfunction of the ETCS when the throttle valve remains at a fixed angle despite high drive current from the ECM. The ECM will turn on the MIL and a DTC is set.

FAIL-SAFE

If the ETCS has a malfunction, the ECM cuts off current to the throttle control actuator. The throttle control valve returns to a predetermined opening angle (approximately 16°) by the force of the return spring. The ECM then adjusts the engine output by controlling the fuel injection (intermittent fuel-cut) and ignition timing in accordance with the accelerator pedal opening angle to enable the vehicle to continue at a minimal speed.

If the accelerator pedal is depressed firmly and slowly, the vehicle can be driven slowly.

If a "pass" condition is detected and then the ignition switch is turned OFF, the fail-safe operation will stop and the system will return to normal condition.

MONITOR STRATEGY

MONITOR STRATEGY

Related DTCs	P2111: Throttle actuator stuck open P2112: Throttle actuator stuck close
Required sensors / components (Main)	Throttle actuator
Required sensors / components (Related)	-
Frequency of operation	Continuous
Duration	0.5 sec.
MIL operation	Immediate
Sequence of operation	None

TYPICAL ENABLING CONDITIONS

TYPICAL ENABLING CONDITIONS

The monitor will run whenever the following DTCs are not present	None

Throttle actuator stuck open (P2111):

cardiagn.com

TYPICAL ENABLING CONDITIONS (THROTTLE ACTUATOR STUCK OPEN (P2111))

System guard	ON
Throttle actuator current	2 A or more
Throttle actuator close duty ratio	80 % or more

Throttle actuator stuck close (P2112):

TYPICAL ENABLING CONDITIONS (THROTTLE ACTUATOR STUCK CLOSE (P2112))

System guard	ON
Throttle actuator current	2 A or more
Throttle actuator open duty ratio	80 % or more

TYPICAL MALFUNCTION THRESHOLDS

TYPICAL MALFUNCTION THRESHOLDS

TP sensor voltage change	Less than 0.1 A

WIRING DIAGRAM

Refer to wiring diagrams under **DTC P2102, P2103: THROTTLE ACTUATOR CONTROL MOTOR CIRCUIT LOW/HIGH**.

INSPECTION PROCEDURE

HINT:

Read freeze frame data using the hand-held tester or the OBD II scan tool. Freeze frame data records the engine conditions when a malfunction is detected. When troubleshooting, freeze frame data can help determine if the vehicle was running or stopped, if the engine was warmed up or not, if the air-fuel ratio was lean or rich, and other data from the time the malfunction occurred.

1. **Is there DTC P2111 or P2112 being output.**

   NG: Go to relevant DTC chart (see DIAGNOSTIC TROUBLE CODE CHART).

   OK: Go To Next Step

2. **Visually check throttle valve.**

   PREPARATION:

   Remove the intake air duct.

   CHECK:

   Check for contamination between the throttle valve and the housing. If necessary, clean the throttle body.

   And check that the throttle valve moves smoothly.

cardiagn.com

OK:

The throttle valve is not contaminated with foreign objects and can move smoothly

NG: Replace throttle body.
OK: Go To Next Step

3. **Check DTC output.**

PREPARATION:

a. Start the engine, and depress and release the accelerator pedal quickly (fully open and fully close).
b. Clear the DTC.

CHECK:

Read the DTC.

RESULT:

DTC OUTPUT

Display (DTC output)	Proceed to
No DTC	A
P2111 and/or P2112	B

B: Replace ECM (see ENGINE CONTROL MODULE (ECM)).
A: Check for intermittent problems (see PRE-CHECK).

DTC P2118: THROTTLE ACTUATOR CONTROL MOTOR CURRENT RANGE/PERFORMANCE

CIRCUIT DESCRIPTION

The Electronic Throttle Control System (ETCS) has a dedicated power supply circuit. The voltage (+BM) is monitored and when the voltage is low (less than 4 V), the ECM concludes that the ETCS has a fault and current to the throttle actuator is cut.

When the voltage becomes unstable, the ETCS control condition itself becomes unstable. For this reason, when the voltage is low, the current to the actuator is cut. If repairs are made and the system has returned to normal and then the ignition switch is turned OFF, the ECM will be able to restart the actuator.

HINT:

This ETCS does not use a throttle cable.

cardiagn.com

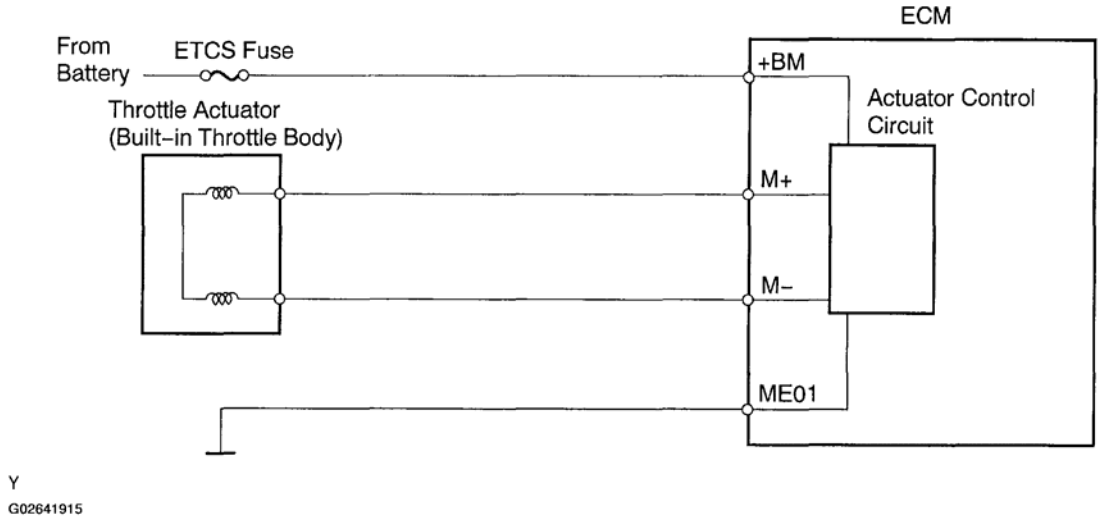

Fig. 217: Circuit Diagram - Throttle Actuator Control Motor
Courtesy of TOYOTA MOTOR SALES, U.S.A., INC.

DTC No.	DTC Detection Condition	Trouble Area
P2118	Open in ETCS power source circuit	•Open in ETCS power source circuit •ETCS fuse •ECM

G02641916

Fig. 218: DTC P2118 - DTC Detection Condition Chart
Courtesy of TOYOTA MOTOR SALES, U.S.A., INC.

MONITOR DESCRIPTION

The ECM monitors the battery supply voltage applied to the electronic throttle actuator. When the power supply voltage drops below the threshold, the ECM concludes that the power supply circuit has an open circuit. A DTC is set and the MIL is turned on.

FAIL-SAFE

If the ETCS has a malfunction, the ECM cuts off current to the throttle actuator. The throttle control valve returns to a predetermined opening angle (approximately 16°by the force of the return spring. The ECM then adjusts the engine output by controlling the fuel injection (intermittent fuel-cut) and ignition timing in accordance with the accelerator pedal opening angle to enable the vehicle to continue at a minimal speed.

If the accelerator pedal is depressed firmly and slowly, the vehicle can be driven slowly.

If a "pass" condition is detected and the ignition switch is turned OFF, the fail-safe operation will stop and the system will return to normal.

cardiagn.com

MONITOR STRATEGY

MONITOR STRATEGY

Related DTCs	P2118: Throttle actuator power supply
Required sensors / components (Main)	Throttle actuator, Throttle valve, ETCS fuse
Required sensors / components (Related)	-
Frequency of operation	Continuous
Duration	0.8 sec.
MIL operation	Immediate
Sequence of operation	None

TYPICAL ENABLING CONDITIONS

TYPICAL ENABLING CONDITIONS

The monitor will run whenever the following DTCs are not present	None
Throttle actuator power	ON
Battery voltage	More than 8 V

TYPICAL MALFUNCTION THRESHOLDS

TYPICAL MALFUNCTION THRESHOLDS

Throttle actuator power supply voltage	Less than 4 V

COMPONENT OPERATING RANGE

COMPONENT OPERATING RANGE

Throttle actuator power supply voltage	9 to 14 V

WIRING DIAGRAM

cardiagn.com

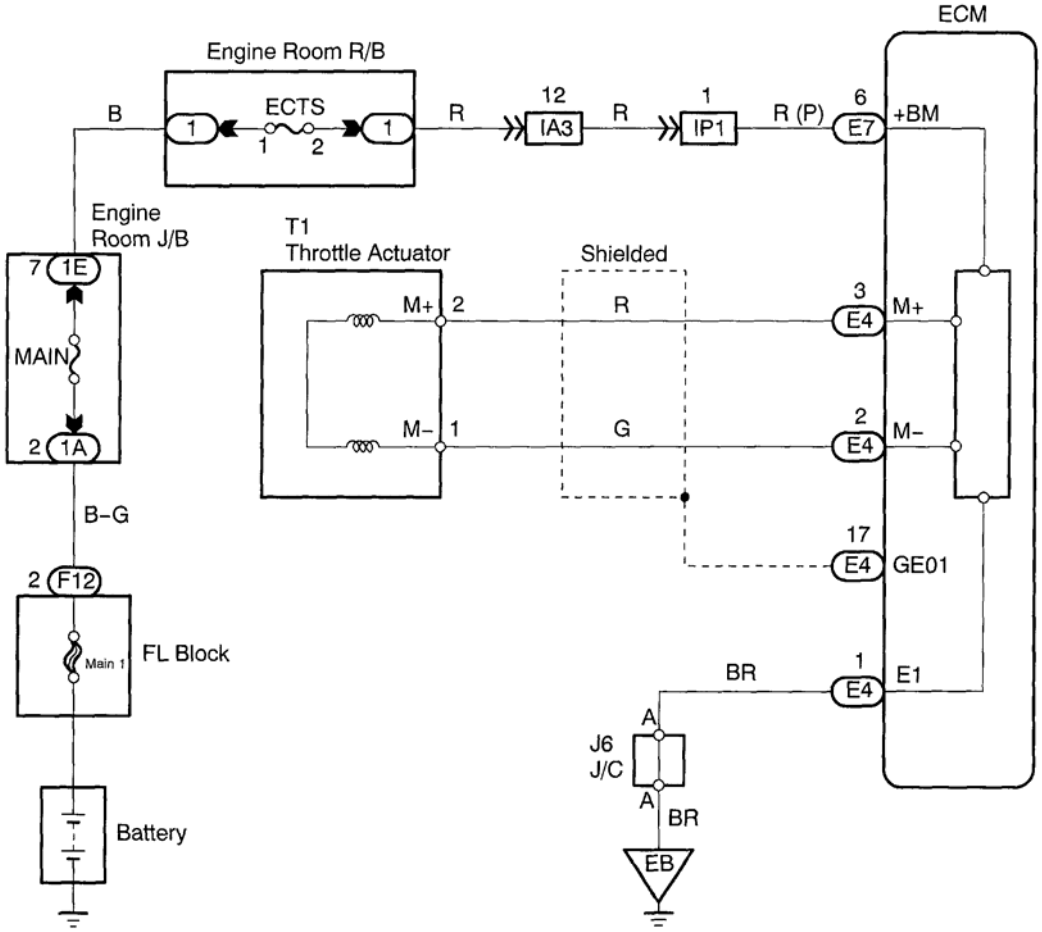

Y
G02641917

Fig. 219: Wiring Diagram - Throttle Actuator Control Motor
Courtesy of TOYOTA MOTOR SALES, U.S.A., INC.

INSPECTION PROCEDURE

HINT:

Read freeze frame data using the hand-held tester or the OBD II scan tool. Freeze frame data records the engine conditions when a malfunction is detected. When troubleshooting, freeze frame data can help determine if the vehicle was running or stopped, if the engine was warmed up or not, if the air-fuel ratio was lean or rich, and other data from the time the malfunction occurred.

1. **Check ETCS fuse.**

cardiagn.com

PREPARATION:

Remove the ETCS fuse from the engine room R/B.

CHECK:

Check the resistance of the ETCS fuse.

OK:

Resistance : Below 1 ohm

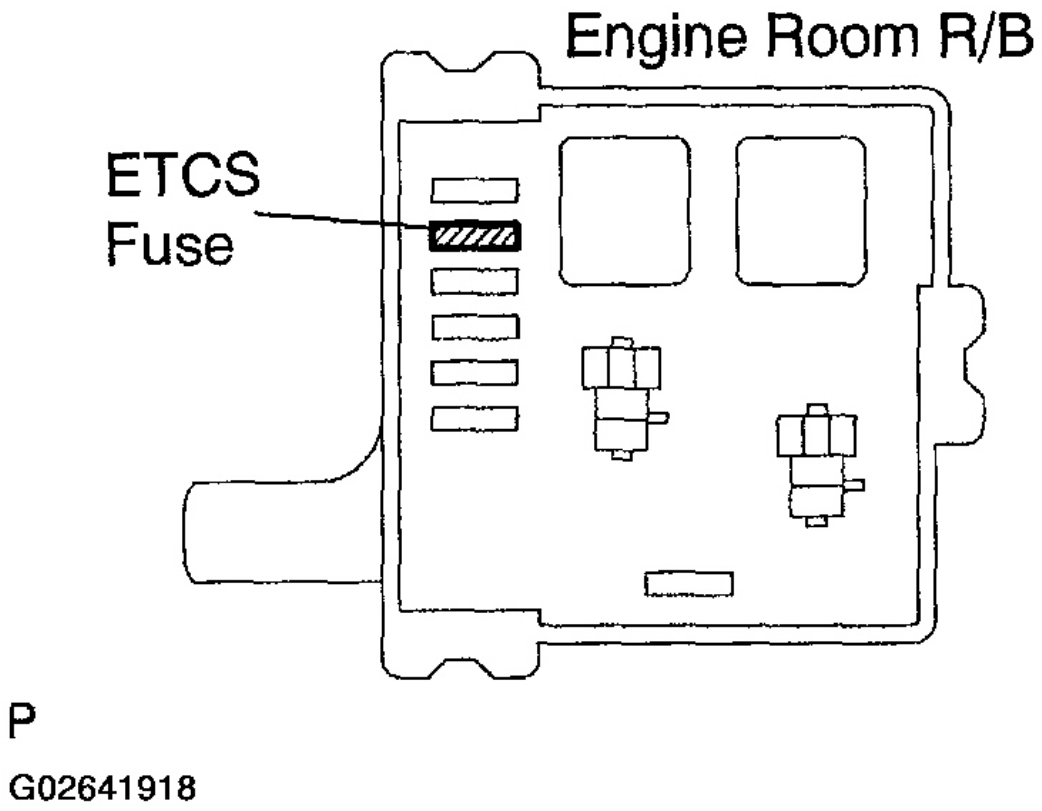

Fig. 220: Identifying ETCS Fuse
Courtesy of TOYOTA MOTOR SALES, U.S.A., INC.

NG: Replace ETCS fuse.
OK: Go To Next Step

2. **Check voltage between terminal +BM of ECM connector and body ground.**

cardiagn.com

PREPARATION:

Remove the glove compartment (see **ENGINE CONTROL MODULE (ECM)**).

CHECK:

Measure the voltage between terminal +BM of the ECM connector and body ground.

OK:

Voltage: 9 to 14 V

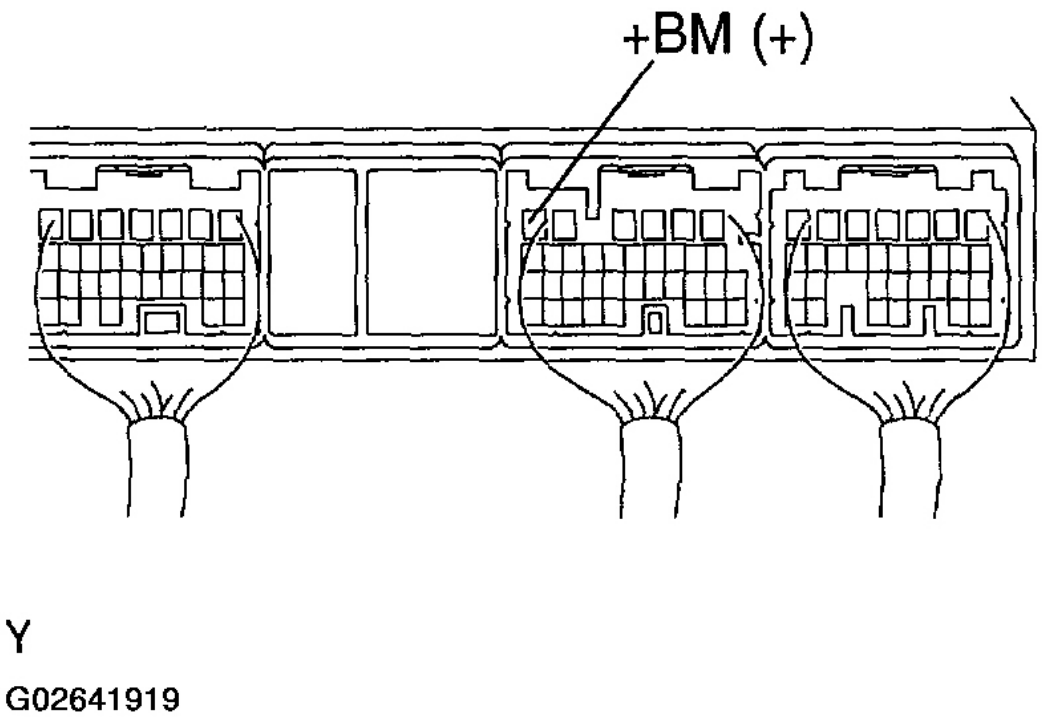

Fig. 221: Identifying Terminal +BM Of ECM Connector
Courtesy of TOYOTA MOTOR SALES, U.S.A., INC.

OK: Replace ECM (see ENGINE CONTROL MODULE (ECM)).

NG: Go To Next Step

3. **Check for open in wire harness between battery and ETCS fuse, and ETCS fuse and ECM (see HOW TO USE THE DIAGNOSTIC CHART AND INSPECTION PROCEDURE).**

NG: Repair or replace harness and connector.

OK: Check and repair engine room R/B.

cardiagn.com

DTC P2119: THROTTLE ACTUATOR CONTROL THROTTLE BODY RANGE PERFORMANCE

CIRCUIT DESCRIPTION

The Electronic Throttle Control System (ETCS) is composed of a throttle actuator that operates the throttle valve, a throttle position sensor that detects the opening angle of the throttle valve, an accelerator pedal position sensor that detects the accelerator pedal position, and the ECM that controls the ETCS system. The ECM operates the throttle actuator to position the throttle valve for proper response to driver inputs. The throttle position sensor, mounted on the throttle body, detects the opening angle of the throttle valve and provides this signal to the ECM so that the ECM can regulate the throttle actuator.

DTC No.	DTC Detection Condition	Trouble Area
P2119	Throttle opening angle continues to vary greatly from target throttle opening angle	•ETCS •ECM

G02641920

Fig. 222: DTC P2119 - DTC Detection Condition Chart
Courtesy of TOYOTA MOTOR SALES, U.S.A., INC.

MONITOR DESCRIPTION

The ECM determines the "actual" throttle angle based on the throttle position sensor signal. The "actual" throttle position is compared to the "target" throttle position commanded by the ECM. If the difference of these two values exceeds a specified limit, the ECM interprets this as a fault in the ETCS system. The ECM turns on the MIL and a DTC is set.

FAIL-SAFE

If the ETCS has a malfunction, the ECM cuts off current to the throttle actuator. The throttle control valve returns to a predetermined opening angle (approximately 16°) by the force of the return spring. The ECM then adjusts the engine output by controlling the fuel injection (intermittent fuel-cut) and ignition timing in accordance with the accelerator pedal opening angle to enable the vehicle to continue at a minimal speed. If the accelerator pedal is depressed firmly and slowly, the vehicle can be driven slowly.

If a "pass" condition is detected and then the ignition switch is turned OFF, the fail-safe operation will stop and the system will return to normal condition.

MONITOR STRATEGY

MONITOR STRATEGY

Related DTCs	P2119: ETCS malfunction
Required sensors / components (Main)	Throttle actuator
Required sensors / components (Related)	-
Frequency of operation	Continuous
Duration	1 sec.
MIL operation	Immediate

cardiagn.com

Sequence of operation	None

TYPICAL ENABLING CONDITIONS

TYPICAL ENABLING CONDITIONS

The monitor will run whenever the following DTCs are not present	None

TYPICAL MALFUNCTION THRESHOLDS

TYPICAL MALFUNCTION THRESHOLDS

Difference between "target TP" and "actual TP"	0.3 V or more

WIRING DIAGRAM

Refer to wiring diagrams under **DTC P2102, P2103: THROTTLE ACTUATOR CONTROL MOTOR CIRCUIT LOW/HIGH**.

INSPECTION PROCEDURE

HINT:

Read freeze frame data using the hand-held tester or the OBD II scan tool. Freeze frame data records the engine conditions when a malfunction is detected. When troubleshooting, freeze frame data can help determine if the vehicle was running or stopped, if the engine was warmed up or not, if the air-fuel ratio was lean or rich, and other data from the time the malfunction occurred.

1. **Are there any other codes (besides DTC P2119) being output?**

   PREPARATION:

   a. Connect the hand-held tester or the OBD II scan tool to the DLC3.
   b. Turn ON the ignition switch and push the hand-held tester or the OBD II scan tool main switch ON.
   c. On the hand-held tester, enter the following menu: DIAGNOSIS / ENHANCED OBD II / DTC INFO / CURRENT CODES.

   CHECK:

   Read the DTC using the hand-held tester or the OBD II scan tool.

   RESULT:

   DTC OUTPUT

Display (DTC Output)	Proceed to
Only P2119 is output	A

cardiagn.com

P2119 and other DTC	B

HINT:

If any codes other than P2119 are output, perform the troubleshooting for those DTCs first.

B: Go to relevant DTC chart (see DIAGNOSTIC TROUBLE CODE CHART).
A: Go To Next Step

2. **Check DTC output (Check if DTC outputs reoccur).**

PREPARATION:

a. Clear the DTC (See **PRE-CHECK**).
b. Allow the engine to idle for 15 seconds.
c. Pull the hand brake and shift the gear to D.
d. Depress the brake pedal securely and the accelerator pedal fully for 5 seconds.

CHECK:

Read the output DTC.

HINT:

Accelerator pedal position (TP) sensor voltage can be confirmed using the hand-held tester (DATA LIST / ALL / THROTTLE POS #1).

OK:

No DTC is output.

OK: System is OK.
NG: Replace throttle body.

DTC P2120, P2122, P2123, P2125, P2127, P2128, P2138: THROTTLE/PEDAL POSITION SENSOR/SWITCH "D & E" CIRCUIT LOW/HIGH INPUT & THROTTLE/PEDAL POSITION SENSOR/SWITCH "D & E" VOLTAGE CORRELATION

HINT:

This is the repair procedure for the "accelerator pedal position sensor".

CIRCUIT DESCRIPTION

HINT:

cardiagn.com

- This Electronic Throttle Control System (ETCS) does not use a throttle cable.

The accelerator pedal position sensor is mounted on the accelerator pedal bracket. The accelerator pedal position sensor has 2 sensor elements/signal outputs: VPA1 and VPA2. VPA1 is used to detect the actual accelerator pedal angle (used for engine control) and VPA2 is used to detect malfunctions in VPA1. Voltage applied to VPA1 and VPA2 changes between 0 V and 5 V depending on the accelerator pedal angle.

The ECM monitors the accelerator pedal angle from VPA1 and VPA2 signal output, and controls the throttle motor based on these signals.

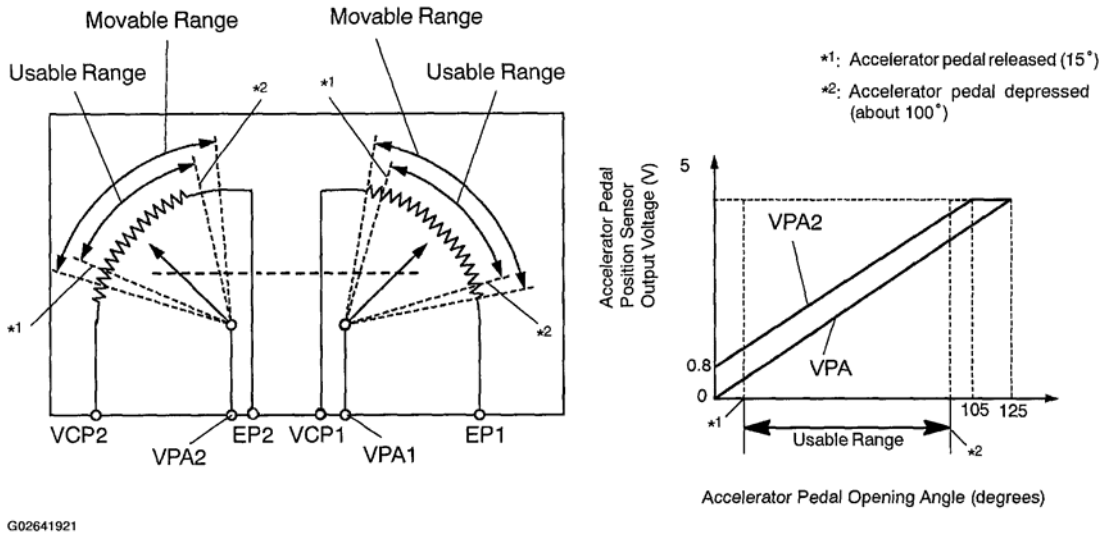

Fig. 223: Accelerator Pedal Position Sensor Output Voltage Graph
Courtesy of TOYOTA MOTOR SALES, U.S.A., INC.

cardiagn.com

DTC No.	DTC Detection Condition	Trouble Area
P2120	Condition (a) continues for 0.5 second or more: (a) VPA is 0.2 V or less and VPA2 is 0.97 degrees or more; or VPA is 4.8 V or more:	•Open or short in accelerator pedal position sensor circuit •Accelerator pedal position sensor •ECM
P2122	Conditions (a) and (b) continue for 0.5 seconds or more: (a) VPA is 0.2 V or less (b) VPA2 is 0.97 degrees or more	
P2123	Condition (a) continues for 2.0 seconds or more: (a) VPA is 4.8 V or more	
P2125	Condition (a) continues for 0.5 seconds. or more: (a) VPA2 is 0.5 V or less or VPA2 is 4.8 V or more	
P2127	Conditions (a) and (b) continue for 0.5 seconds or more: (a) VPA2 is 0.5 V or less (b) VPA is 0.97 degrees or more	
P2128	Conditions (a) and (b) continue for 2.0 seconds or more: (a) VPA2 is 4.8 V or more (b) VPA is 0.2 V or more and VPA is 3.45 V or less	
P2138	Conditions (a) or (b) continue for 2.0 seconds or more: (a) Difference between VPA and VPA2 is 0.02 V or less (b) VPA is 0.2 V or less and VPA2 is 0.5 V or less	

G02641922

Fig. 224: DTC P2120, P2122, P2123, P2125, P2127, P2128 & P2138 - DTC Detection Condition Chart
Courtesy of TOYOTA MOTOR SALES, U.S.A., INC.

HINT:

After confirming DTCs P2120, P2122, P2123, P2125, P2127, P2128 and P2138, use the hand-held tester to confirm the throttle valve opening percentage.

Trouble area	Accelerator pedal position expressed as voltage			
	Accelerator pedal released		Accelerator pedal depressed	
	ACCEL POS #1	ACCEL POS #2	ACCEL POS #1	ACCEL POS #2
VC circuit open	0 V	0 V	0 V	0 V
VPA circuit open or ground short	0 V	1.5 to 2.9 V	0 V	3.5 to 5.5 V
VPA2 circuit open or ground short	0.5 to 1.1 V	0 V	2.5 to 4.6 V	0 V
E2 circuit open	5 V	5 V	5 V	5 V

G02641923

Fig. 225: Accelerator Pedal Position Sensor Voltage & Trouble Area Chart
Courtesy of TOYOTA MOTOR SALES, U.S.A., INC.

MONITOR DESCRIPTION

When VPA or VPA2 deviates from the standard, or the difference between the voltage outputs of the 2 sensors is less than the threshold, the ECM concludes that there is a defect in the accelerator pedal position sensor. The ECM turns on the MIL and a DTC is set.

Example:

cardiagn.com

When the voltage output of the VPA is below 0.2 V or exceeds 4.8 V.

FAIL-SAFE

The accelerator pedal position sensor has 2 (main and sub) sensor circuits. If a malfunction occurs in either of the sensor circuits, the ECM detects the abnormal signal voltage difference between the 2 sensor circuits and switches to fail-safe mode. In fail-safe mode, the remaining circuit is used to calculate the accelerator pedal opening to allow the vehicle to continue driving.

If both circuits malfunction, the ECM regards the opening angle of the accelerator pedal to be fully closed.

In this case, the throttle valve will remain closed as if the engine is idling.

If a "pass" condition is detected and then the ignition switch is turned OFF, the fail-safe operation will stop and the system will return to normal condition.

MONITOR STRATEGY

MONITOR STRATEGY

Related DTCs	P2120: APP sensor 1 range check (Fluttering) P2122: APP sensor 1 range check (low voltage) P2123: APP sensor 1 range check (high voltage) P2125: APP sensor 2 range check (Fluttering) P2127: APP sensor 2 range check (low voltage) P2128: APP sensor 2 range check (high voltage) P2138: APP sensor range check (correlation)
Required sensors / components (Main)	TP sensor
Required sensors / components (Related)	-
Frequency of operation	Continuous
Duration	0.5 sec.: P2120, P2122, P2125 and P2127 2 sec.: P2123, P2128 and P2138
MIL operation	Immediate
Sequence of operation	None

TYPICAL ENABLING CONDITIONS

TYPICAL ENABLING CONDITIONS

The monitor will run whenever the following DTCs are not present	None
ETCS power	ON

TYPICAL MALFUNCTION THRESHOLDS

P2120:

TYPICAL MALFUNCTION THRESHOLDS (P2120)

cardiagn.com

VPA1 voltage	0.2 V or less or 4.8 V or more

P2122:

TYPICAL MALFUNCTION THRESHOLDS (P2122)

VPA1 voltage when VPA2 is 0.97°or more	0.2 V or less

P2123:

TYPICAL MALFUNCTION THRESHOLDS (P2123)

VPA1 voltage	4.8 V or more

P2125:

TYPICAL MALFUNCTION THRESHOLDS (P2125)

VPA2 voltage	0.5 V or less or 4.8 V or more

P2127:

TYPICAL MALFUNCTION THRESHOLDS (P2127)

VPA2 voltage when VPA1 is 0.97°or more	0.5 V or less

P2128:

TYPICAL MALFUNCTION THRESHOLDS (P2128)

VPA2 voltage when the VPA1 is 0.2 to 3.45 V	4.8 V or more

P2138:

TYPICAL MALFUNCTION THRESHOLDS (P2138)

Either of the following conditions is met:	Condition A or B
Conditions A:	
Difference between VPA1 and VPA2 voltage	0.02 V or less
Conditions B (following condition are met):	
VPA1 voltage	0.2 V or less
VPA2 voltage	0.5 V or less

COMPONENT OPERATING RANGE

COMPONENT OPERATING RANGE

VPA1 voltage	0.5 to 4.5 V
VPA2 voltage	1.2 to 4.8 V

cardiagn.com

WIRING DIAGRAM

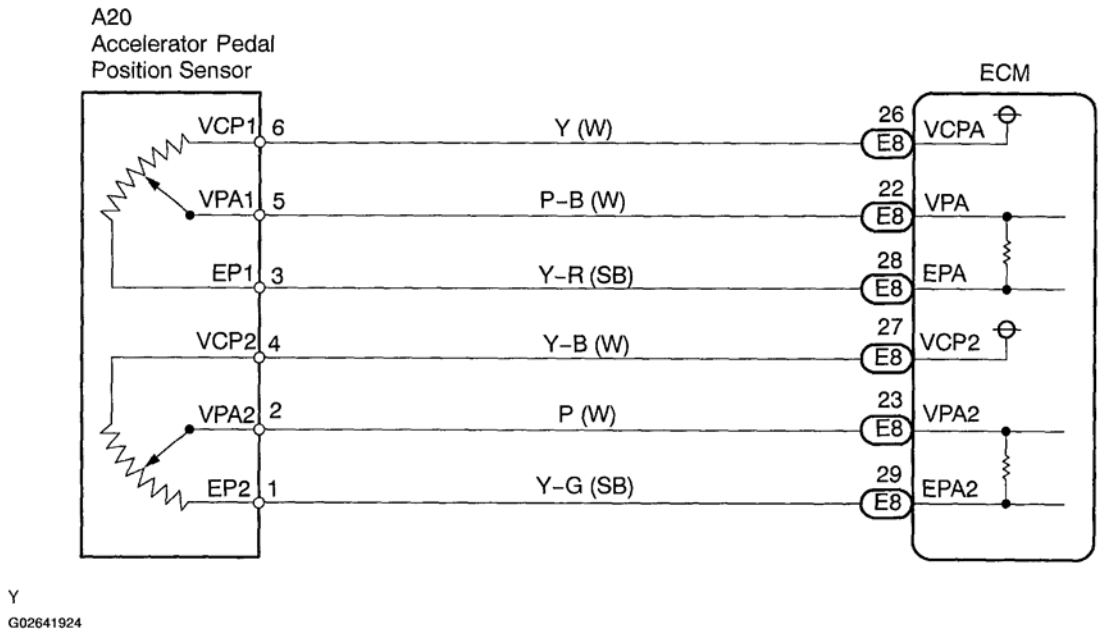

Fig. 226: Wiring Diagram - Accelerator Pedal Position Sensor Circuit
Courtesy of TOYOTA MOTOR SALES, U.S.A., INC.

INSPECTION PROCEDURE

HINT:

Read freeze frame data using the hand-held tester or the OBD II scan tool. Freeze frame data records the engine conditions when a malfunction is detected. When troubleshooting, freeze frame data can help determine if the vehicle was running or stopped, if the engine was warmed up or not, if the air-fuel ratio was lean or rich, and other data from the time the malfunction occurred.

Hand-held tester:

1. **Connect hand-held tester and read voltage for accelerator pedal position sensor data.**

   PREPARATION:

   a. Connect the hand-held tester to the DLC3.
   b. Turn ON the ignition switch. Push the hand-held tester main switch.
   c. On the hand-held tester, enter the following menus: DIAGNOSIS / ENHANCED OBD II / DATA LIST / ETCS / ACCEL POS #1 and ACCEL POS #2.

cardiagn.com

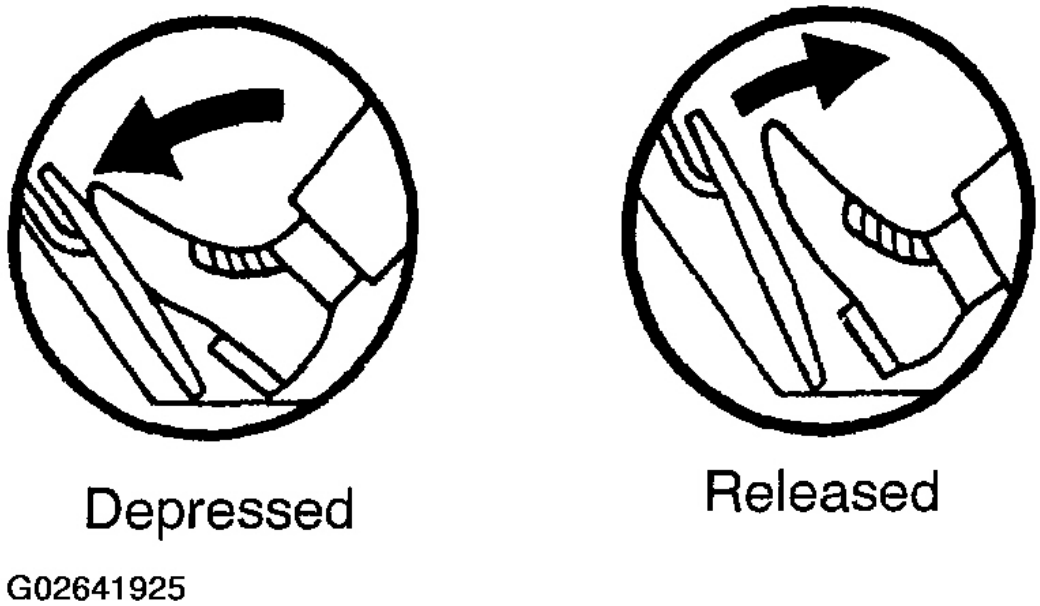

Fig. 227: Depressing & Releasing Brake Pedal
Courtesy of TOYOTA MOTOR SALES, U.S.A., INC.

CHECK:

Read the voltage for the accelerator pedal position sensor data.

OK:

ACCELERATOR PEDAL POSITION SENSOR VOLTAGE

Accelerator Pedal	ACCEL POS #1	ACCEL POS #2
Released	0.5 to 1.1 V	1.2 to 2.0 V
Depressed	2.6 to 4.5 V	3.4 to 5.3 V

OK: Go to step 6.
NG: Go To Next Step

2. **Check accelerator pedal position sensor (see ACCELERATOR PEDAL POSITION SENSOR).**
   NG: Replace accelerator pedal assembly.
   OK: Go To Next Step
3. **Check voltage between terminals VCPA and EPA, and VCP2 and EPA2 of ECM connector.**

PREPARATION:

cardiagn.com

a. Remove the glove compartment (see **ENGINE CONTROL MODULE (ECM)**).
b. Turn the ignition switch ON.

CHECK:

Measure the voltage between terminals VCPA and EPA, and VCP2 and EPA2 of the ECM connector.

OK:

Voltage: 4.5 to 5.5 V

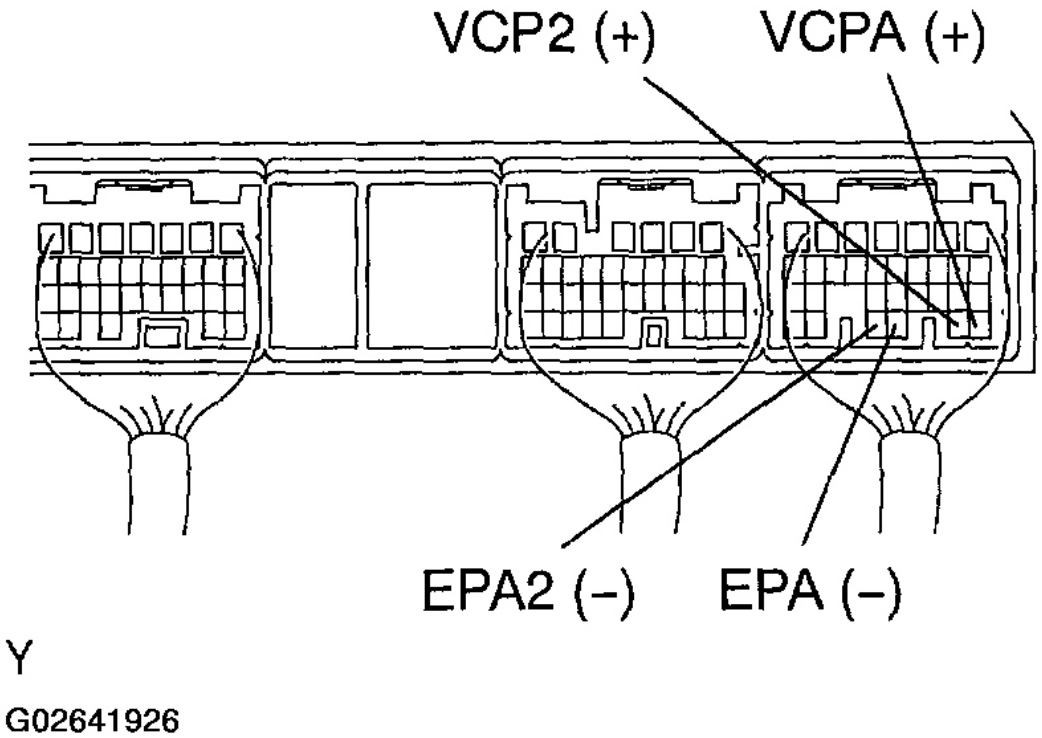

Fig. 228: Identifying Terminals VCPA, EPA, VCP2 & EPA2 Of ECM Connector
Courtesy of TOYOTA MOTOR SALES, U.S.A., INC.

NG: Replace ECM (see ENGINE CONTROL MODULE (ECM)).
OK: Go To Next Step

4. **Check voltage between terminals VPA and EPA, and VPA2 and EPA2 of ECM connector.**

PREPARATION:

cardiagn.com

a. Remove the glove compartment (see **ENGINE CONTROL MODULE (ECM)**).
b. Turn the ignition switch ON.

CHECK:

Measure the voltage between terminals VPA and EPA, and VPA2 and EPA2 of the ECM connector.

OK:

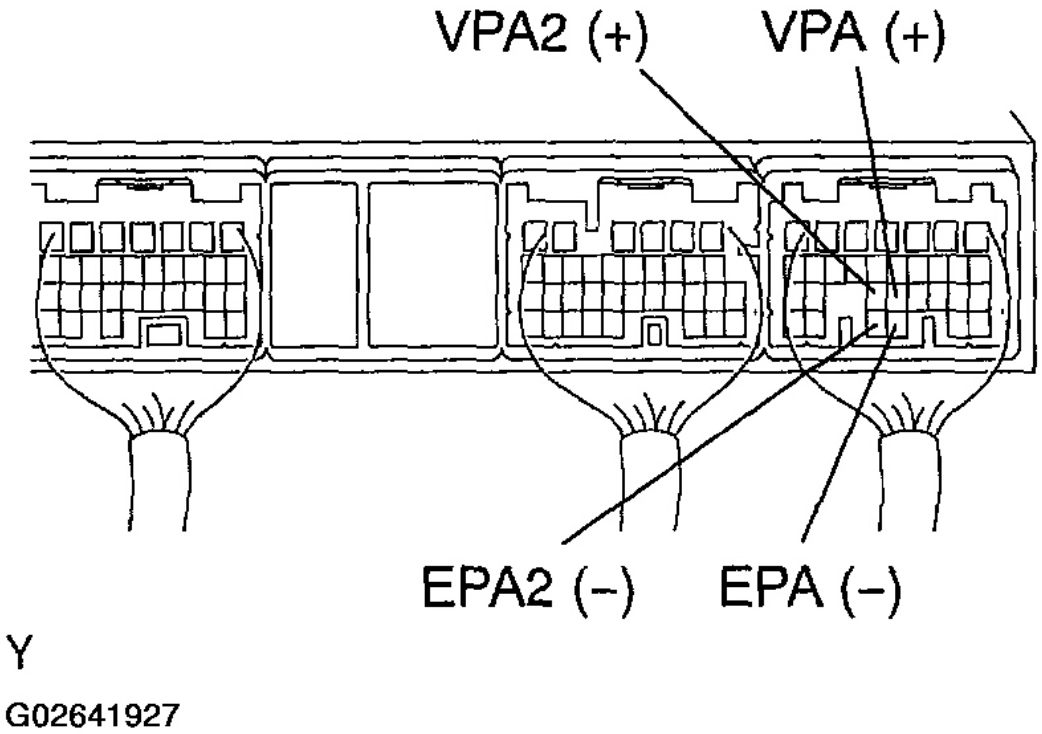

Fig. 229: ECM Connector Terminals Voltage Chart
Courtesy of TOYOTA MOTOR SALES, U.S.A., INC.

cardiagn.com

Accelerator Pedal	Voltage	
	VPA – EPA	VPA2 – EPA2
Released	0.5 to 1.1 V	1.2 to 2.0 V
Depressed	2.6 to 4.5 V	3.4 to 5.3 V

G02641928

Fig. 230: Identifying Terminals VPA, EPA, VPA2 & EPA2 Of ECM Connector
Courtesy of TOYOTA MOTOR SALES, U.S.A., INC.

OK: Replace ECM (see ENGINE CONTROL MODULE (ECM)).

NG: Go To Next Step

5. **Check for open and short in wire harness in VCPA, VCP2, VPA, VPA2, EPA and EPA2 circuits between ECM and accelerator pedal position sensor (see HOW TO USE THE DIAGNOSTIC CHART AND INSPECTION PROCEDURE).**

   OK: Repair or replace.

   NG: Go To Next Step

6. **Read output DTC (see DIAGNOSTIC TROUBLE CODE CHART).**

   OK: System is OK.

   NG: Replace ECM (see ENGINE CONTROL MODULE (ECM)).

OBD II scan tool (excluding hand-held tester):

1. **Check accelerator pedal assembly (accelerator pedal position sensor) (see ACCELERATOR PEDAL POSITION SENSOR).**

   NG: Replace accelerator pedal assembly.

   OK: Go To Next Step

2. **Check voltage between terminals VCPA and EPA, and VCP2 and EPA2 of ECM connector.**

   PREPARATION:

   a. **Remove the glove compartment (see ENGINE CONTROL MODULE (ECM)).**
   b. **Turn the ignition switch ON.**

   CHECK:

   Measure the voltage between terminals VCPA and EPA, and VCP2 and EPA2 of the ECM connector.

   OK:

cardiagn.com

Voltage: 4.5 to 5.5 V

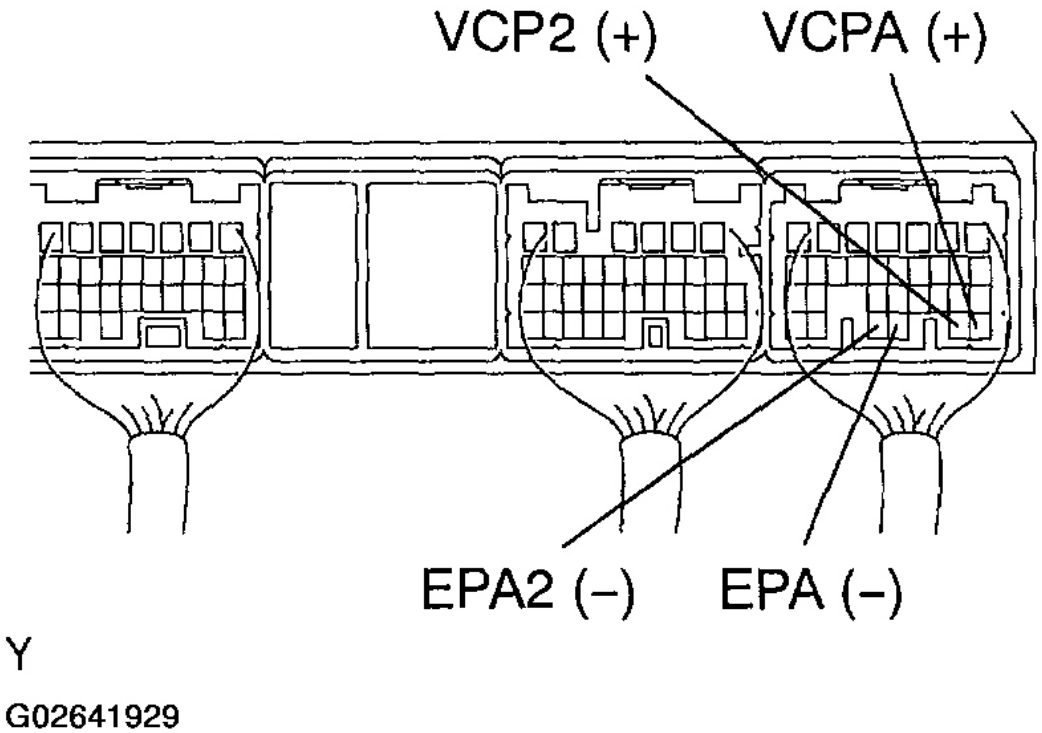

Fig. 231: Identifying Terminals VCPA, EPA, VCP2 & EPA2 Of ECM Connector
Courtesy of TOYOTA MOTOR SALES, U.S.A., INC.

NG: Replace ECM (see ENGINE CONTROL MODULE (ECM)).
OK: Go To Next Step

3. **Check voltage between terminals VPA and EPA, and VPA2 and EPA2 of ECM connector.**

PREPARATION:

a. Remove the glove compartment (see **ENGINE CONTROL MODULE (ECM)**).
b. Turn the ignition switch ON.

CHECK:

Measure the voltage between terminals VPA and EPA, and VPA2 and EPA2 of the ECM connector.

cardiagn.com

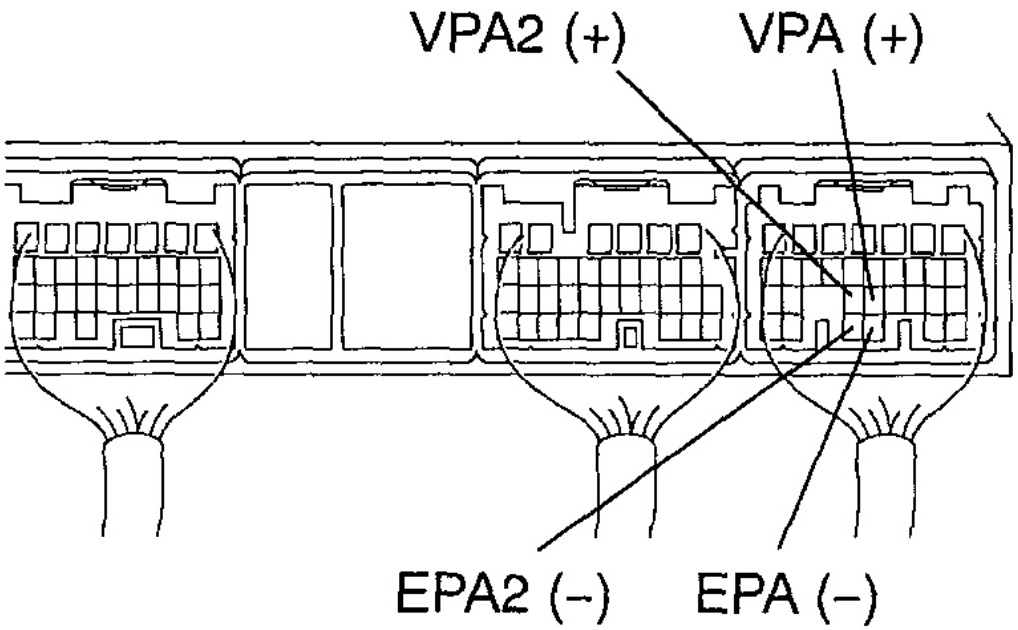

Y

G02641930

Fig. 232: Identifying Terminals VPA, EPA, VPA2 & EPA2 Of ECM Connector
Courtesy of TOYOTA MOTOR SALES, U.S.A., INC.

OK:

Accelerator Pedal	Voltage	
	VPA – EPA	VPA2 – EPA2
Released	0.5 to 1.1 V	1.2 to 2.0 V
Depressed	2.6 to 4.5 V	3.4 to 5.3 V

G02641931

Fig. 233: ECM Connector Terminals Voltage Chart
Courtesy of TOYOTA MOTOR SALES, U.S.A., INC.

OK: Replace ECM (see ENGINE CONTROL MODULE (ECM)).

cardiagn.com

NG: Go To Next Step

4. **Check for open and short in wire harness in VCPA, VCP2, VPA, VPA2, EPA and EPA2 circuits between ECM and accelerator pedal position sensor (see HOW TO USE THE DIAGNOSTIC CHART AND INSPECTION PROCEDURE).**

   OK: Repair or replace harness and connector.

   NG: Go To Next Step

5. **Read output DTC (see DIAGNOSTIC TROUBLE CODE CHART).**

   OK: System is OK.

   NG: Replace ECM (see ENGINE CONTROL MODULE (ECM)).

DTC P2121: THROTTLE/PEDAL POSITION SENSOR/SWITCH "D" CIRCUIT RANGE/PERFORMANCE

HINT:

This is repair procedure for the "accelerator pedal position sensor".

CIRCUIT DESCRIPTION

Refer to circuit description under **DTC P2120, P2122, P2123, P2125, P2127, P2128, P2138: THROTTLE/PEDAL POSITION SENSOR/SWITCH "D & E" CIRCUIT LOW/HIGH INPUT & THROTTLE/PEDAL POSITION SENSOR/SWITCH "D & E" VOLTAGE CORRELATION**.

DTC No.	DTC Detection Condition	Trouble Area
P2121	Conditions (a) and (b) continue for 0.06 seconds: (a) Difference between VPA and VPA2 deviates from the standard (b) IDL is OFF	•Open or short in accelerator pedal position sensor circuit •Accelerator pedal position sensor •ECM

G02641932

Fig. 234: DTC P2121 - DTC Detection Condition Chart
Courtesy of TOYOTA MOTOR SALES, U.S.A., INC.

MONITOR DESCRIPTION

The accelerator pedal position sensor is mounted on the accelerator pedal bracket. The accelerator pedal position sensor has 2 sensor elements/signal outputs: VPA1 and VPA2. VPA1 is used to detect the actual accelerator pedal angle (used for engine control) and VPA2 is used to detect malfunctions in VPA1. When the difference between the voltage outputs of VPA and VPA2 deviate from the standard, the ECM concludes the accelerator pedal position sensor has a malfunction. The ECM turns on the MIL and a DTC is set.

FAIL-SAFE

The accelerator pedal position sensor has 2 (main and sub) sensor circuits. If a malfunction occurs in either of the sensor circuits, the ECM detects the abnormal signal voltage difference between the 2 sensor circuits and

cardiagn.com

switches to fail-safe mode. In fail-safe mode, the remaining circuit is used to calculate the accelerator pedal opening to allow the vehicle to continue driving.

If both circuits malfunction, the ECM regards the opening angle of the accelerator pedal to be fully closed.

In this case, the throttle valve will remain closed as if the engine is idling.

If a "pass" condition is detected and then the ignition switch is turned OFF, the fail-safe operation will stop and the system will return to normal condition.

MONITOR STRATEGY

MONITOR STRATEGY

Related DTCs	P2121: TP sensor malfunction
Required sensors / components (Main)	TP sensor
Required sensors / components (Related)	-
Frequency of operation	Continuous
Duration	0.5 sec.
MIL operation	Immediate
Sequence of operation	None

TYPICAL ENABLING CONDITIONS

TYPICAL ENABLING CONDITIONS

The monitor will run whenever the following DTCs are not present	None
ETCS power	ON

TYPICAL MALFUNCTION THRESHOLDS

TYPICAL MALFUNCTION THRESHOLDS

Difference in voltage between "VAT1 - basic voltage learned value (sensor 1)" and "VPA2 - basic voltage learned value (sensor 2)"	Less than 0.4 V, or more than 1.2 V

WIRING DIAGRAM

Refer to wiring diagram under **DTC P2120, P2122, P2123, P2125, P2127, P2128, P2138: THROTTLE/PEDAL POSITION SENSOR/SWITCH "D & E" CIRCUIT LOW/HIGH INPUT & THROTTLE/PEDAL POSITION SENSOR/SWITCH "D & E" VOLTAGE CORRELATION**.

INSPECTION PROCEDURE

HINT:

Read freeze frame data using the hand-held tester or the OBD II scan tool. Freeze frame data records the engine conditions when a malfunction is detected. When troubleshooting, freeze frame data can help determine if the

cardiagn.com

vehicle was running or stopped, if the engine was warmed up or not, if the air-fuel ratio was lean or rich, and other data from the time the malfunction occurred.

Hand-held tester:

1. **Connect hand-held tester and read voltage for accelerator pedal position sensor data.**

   PREPARATION:

   a. Connect the hand-held tester to the DLC3.
   b. Turn ON the ignition switch. Push the hand-held tester main switch.
   c. On the hand-held tester, enter the following menus: DIAGNOSIS / ENHANCED OBD II / DATA LIST / ETCS / ACCEL POS #1 and ACCEL POS #2.

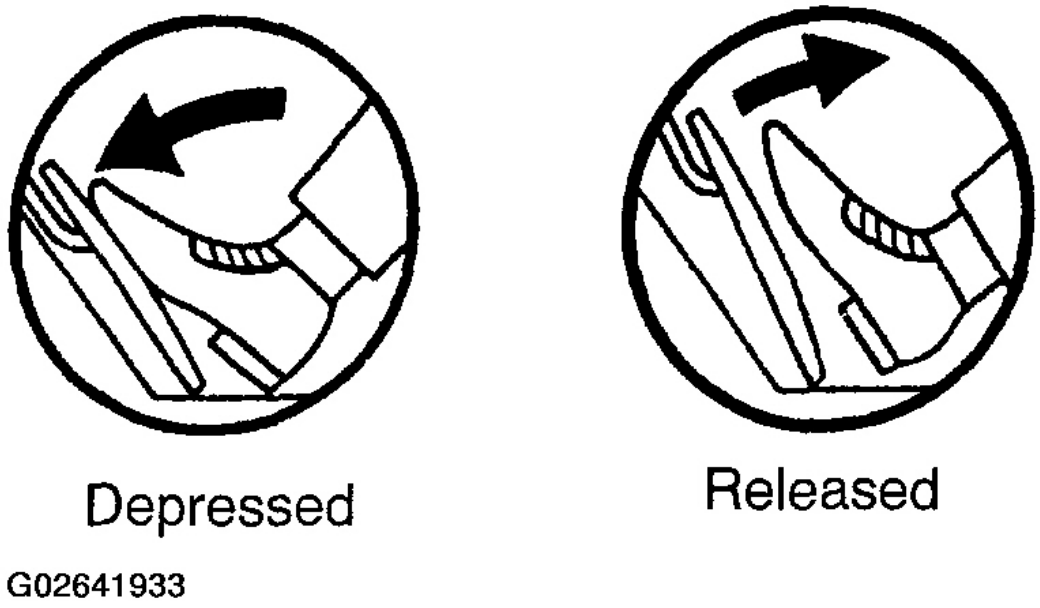

Fig. 235: Depressing & Releasing Brake Pedal
Courtesy of TOYOTA MOTOR SALES, U.S.A., INC.

CHECK:

Read the voltage for the accelerator pedal position sensor data.

OK:

ACCELERATOR PEDAL POSITION SENSOR VOLTAGE

cardiagn.com

Accelerator Pedal	ACCEL POS #1	ACCEL POS #2
Released	0.5 to 1.1 V	1.5 to 2.9 V
Depressed	2.5 to 4.6 V	3.5 to 5.5 V

OK: Replace ECM (see ENGINE CONTROL MODULE (ECM)).

NG: Go To Next Step

2. **Check accelerator pedal assembly (accelerator pedal position sensor) (see ACCELERATOR PEDAL POSITION SENSOR).**

   NG: Replace accelerator pedal assembly.

   OK: Go To Next Step

3. **Check voltage between terminals VPA and EPA, and VPA2 and EPA2 of ECM connector.**

PREPARATION:

a. Remove the glove compartment (see **ENGINE CONTROL MODULE (ECM)**).
b. Turn the ignition switch ON.

CHECK:

Measure the voltage between terminals VPA and EPA, and VPA2 and EPA2 of the ECM connector.

cardiagn.com

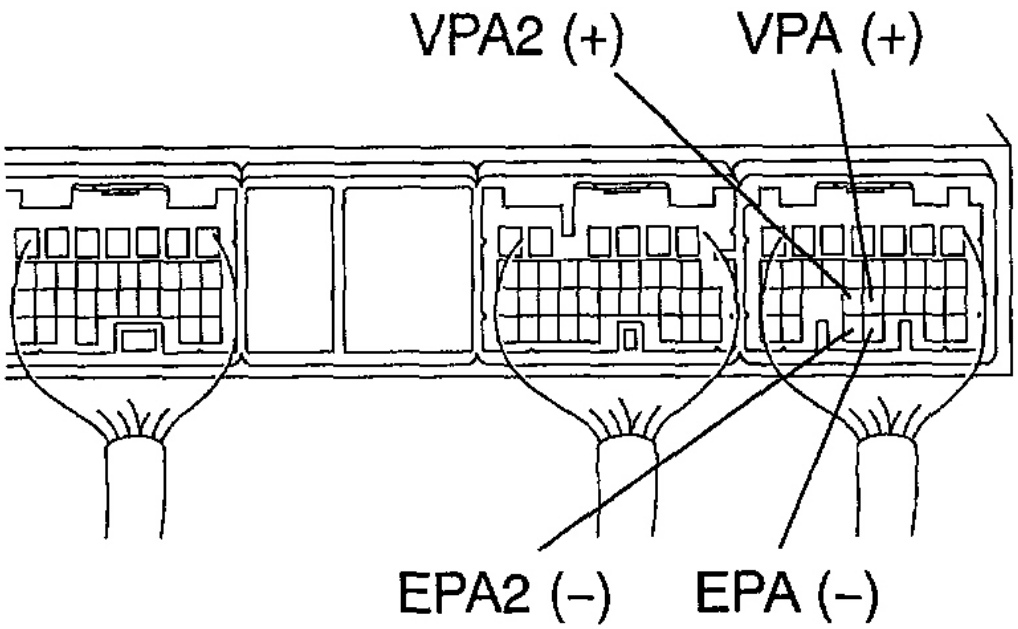

Y

G02641934

Fig. 236: Identifying Terminals VPA, EPA, VPA2 & EPA2 Of ECM Connector
Courtesy of TOYOTA MOTOR SALES, U.S.A., INC.

OK:

Accelerator Pedal	Voltage	
	VPA – EPA	VPA2 – EPA2
Released	0.5 to 1.1 V	1.5 to 2.9 V
Depressed	2.5 to 4.6 V	3.9 to 5.5 V

G02641935

Fig. 237: ECM Connector Terminals Voltage Chart
Courtesy of TOYOTA MOTOR SALES, U.S.A., INC.

OK: Replace ECM (see ENGINE CONTROL MODULE (ECM)).

cardiagn.com

NG: Go To Next Step

4. **Check for open and short in wire harness in VCPA, VCP2, VPA, VPA2, EPA and EPA2 circuits between ECM and accelerator pedal position sensor (see HOW TO USE THE DIAGNOSTIC CHART AND INSPECTION PROCEDURE).**

   OK: Repair or replace.

   NG: Replace accelerator pedal assembly (see ACCELERATOR PEDAL POSITION SENSOR).

OBD II scan tool (excluding hand held tester):

1. **Check voltage between terminals VPA and EPA, and VPA2 and EPA2 of ECM connector.**

   PREPARATION:

   a. Remove the glove compartment (see **ENGINE CONTROL MODULE (ECM)**).
   b. Turn the ignition switch ON.

   CHECK:

   Measure the voltage between terminals VPA and EPA, and VPA2 and EPA2 of the ECM connector.

cardiagn.com

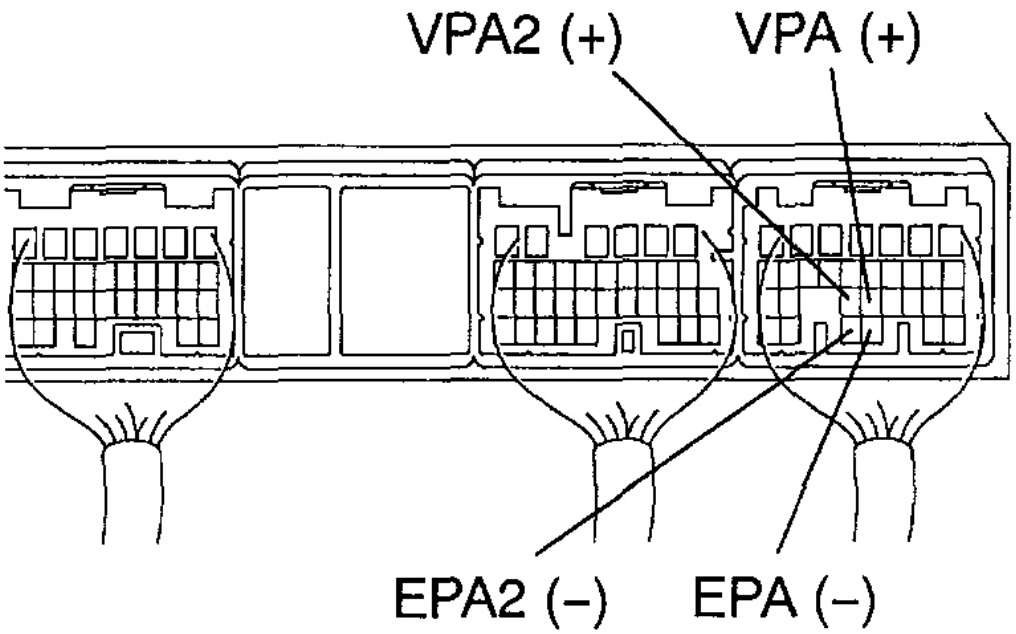

Y

G02641936

Fig. 238: Identifying Terminals VPA, EPA, VPA2 & EPA2 Of ECM Connector
Courtesy of TOYOTA MOTOR SALES, U.S.A., INC.

OK:

Accelerator Pedal	Voltage	
	VPA – EPA	VPA2 – EPA2
Released	0.5 to 1.1 V	1.5 to 2.9 V
Depressed	2.5 to 4.6 V	3.9 to 5.5 V

G02641937

Fig. 239: ECM Connector Terminals Voltage Chart
Courtesy of TOYOTA MOTOR SALES, U.S.A., INC.

OK: Replace ECM (see ENGINE CONTROL MODULE (ECM)).

cardiagn.com

NG: Go To Next Step

2. **Check for open and short in wire harness in VCPA, VCP2, VPA, VPA2, EPA and EPA2 circuits between ECM and accelerator pedal position sensor (see HOW TO USE THE DIAGNOSTIC CHART AND INSPECTION PROCEDURE).**

   OK: Repair or replace.

   NG: Replace accelerator pedal assembly (see ACCELERATOR PEDAL POSITION SENSOR).

DTC P2195, P2196: OXYGEN (A/F) SENSOR SIGNAL STUCK LEAN (BANK 1 SENSOR 1) & OXYGEN (A/F) SENSOR SIGNAL STUCK RICH (BANK 1 SENSOR 1)

HINT:

Although the title (DTC description) says "oxygen sensor", this DTC is related to the "A/F sensor".

CIRCUIT DESCRIPTION

The A/F sensor provides output voltage* approximately equal to the existing air-fuel ratio. The A/F sensor output voltage is used to provide feedback for the ECM to control the air-fuel ratio.

With the A/F sensor output, the ECM can determine deviation from the stoichiometric air-fuel ratio and control proper injection time. If the A/F sensor is malfunctioning, the ECM is unable to accurately control air-fuel ratio.

The A/F sensor is equipped with a heater which heats the zirconia element. The heater is also controlled by the ECM. When the intake air volume is low (the temperature of the exhaust gas is low), current flows to the heater witch heats the sensor to facilitate detection of accurate oxygen concentration.

The A/F sensor is a planar type. Compared to a conventional type, the sensor and heater portions are narrower. Because the heat of the heater is conducted through the alumina to zirconia (of the sensor portion), sensor activation is accelerated.

To obtain a high purification rate of the CO, HC and NOx components of the exhaust gas, a three-way catalytic converter is used. The converter is most efficient when the air-fuel ratio is maintained near the stoichiometric air-fuel ratio.

*: The voltage value changes in the inside of the ECM only.

cardiagn.com

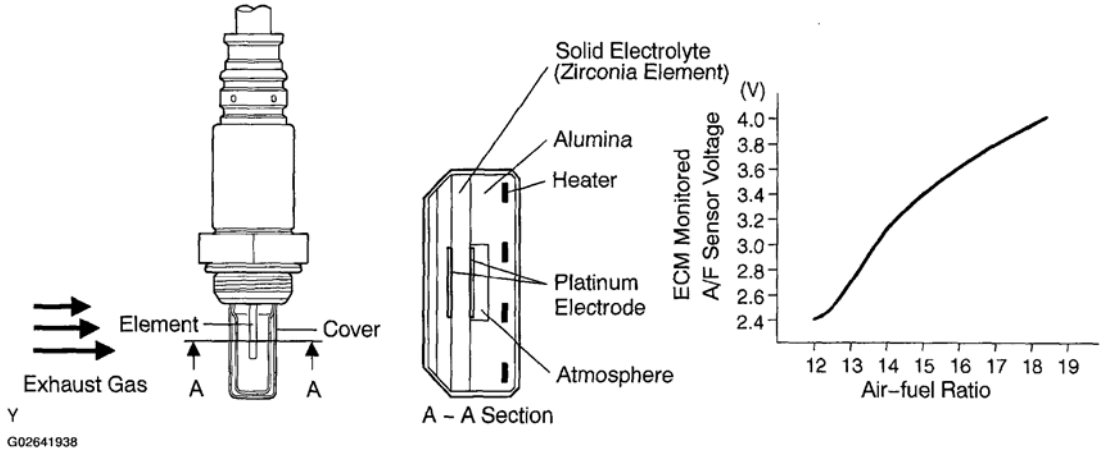

Fig. 240: A/F Sensor Output Voltage Graph
Courtesy of TOYOTA MOTOR SALES, U.S.A., INC.

DTC No.	DTC Detection Condition	Trouble Area
P2195	Conditions (a) and (b) continue for 2 seconds or more: (a) A/F sensor voltage is more than 3.8 V (b) Rear oxygen sensor voltage is 0.15 V or more	•Open or short in A/F sensor circuit •A/F sensor •A/F sensor heater •EFI Main relay •A/F sensor heater and EFI Main relay circuit •Air induction system •Fuel pressure •Injector •ECM
P2196	Conditions (a) and (b) continue for 2 seconds or more: (a) A/F sensor voltage is less than 2.8 V (b) Rear oxygen sensor voltage is less than 0.85 V	

G02641939

Fig. 241: DTC P2195 & P2196 - DTC Detection Condition Chart
Courtesy of TOYOTA MOTOR SALES, U.S.A., INC.

HINT:

- DTCs P2195 and P2196 indicate a malfunction related to bank 1 of the A/F sensor circuit.
- Sensor 1 refers to the sensor closest to the engine assembly.
- After confirming DTCs P2195 and P2196, use the hand-held tester or the OBD II scan tool to confirm A/F sensor output voltage (AFS B1S1) from the All menu (to reach the ALL menu: DIAGNOSIS / ENHANCED OBD II / DATA LIST / ALL).
- The A/F sensor's output voltage and the short-term fuel trim value can be read using the OBD II scan tool or the hand-held tester.
- The ECM controls the voltage of the A1A+ and A1A- terminals of the ECM to a fixed voltage. Therefore, it is impossible to confirm the A/F sensor output voltage without the OBD II scan tool or the hand-held tester.
- The OBD II scan tool (excluding hand-held tester) displays one fifth of the A/F sensor output voltage which is displayed on the hand-held tester.

cardiagn.com

MONITOR DESCRIPTION

Under the air-fuel ratio feedback control, if the voltage output of the A/F sensor indicates RICH or LEAN for a certain period of time or more, the ECM concludes that there is a fault in the A/F sensor system. The ECM will turn on the MIL and a DTC is set.

Example:

If the A/F sensor voltage output is less than 2.8 V (very RICH) for 10 seconds even though voltage output of the heated oxygen sensor output voltage is less than 0.85 V, the ECM sets DTC P2196 or DTC P2198.

If the heated oxygen sensor output voltage is 0.15 V or more but the A/F sensor voltage output is more than 3.8 V (very LEAN) for 10 seconds, DTC P2195 is set.

MONITOR STRATEGY

MONITOR STRATEGY

Related DTCs	P2195: A/F sensor signal (Bank 1) stuck lean P2196: A/F sensor signal (Bank 1) stuck rich
Required sensors / components (Main)	A/F sensor
Required sensors / components (Related)	-
Frequency of operation	Continuous
Duration	10 sec.
MIL operation	2 driving cycles
Sequence of operation	None

TYPICAL ENABLING CONDITIONS

TYPICAL ENABLING CONDITIONS

The monitor will run whenever the following DTCs are not present	See **PRE-CHECK**
Time after engine start	30 sec. or more
A/F sensor status	Activated
A/F admittance	0.014 1/ohm or more
Fuel system status	Closed Loop
Engine condition	Running
Sub-feedback status	Executing
Rear oxygen sensor heater malfunction	Not detected

TYPICAL MALFUNCTION THRESHOLDS

Malfunction Rich side (P2195):

TYPICAL MALFUNCTION THRESHOLDS (MALFUNCTION RICH SIDE (P2195))

A/F sensor voltage	More than 3.8 V

cardiagn.com

Malfunction Lean side (P2196):

TYPICAL MALFUNCTION THRESHOLDS (MALFUNCTION LEAN SIDE (P2196))

A/F sensor voltage	Less than 2.8 V

WIRING DIAGRAM

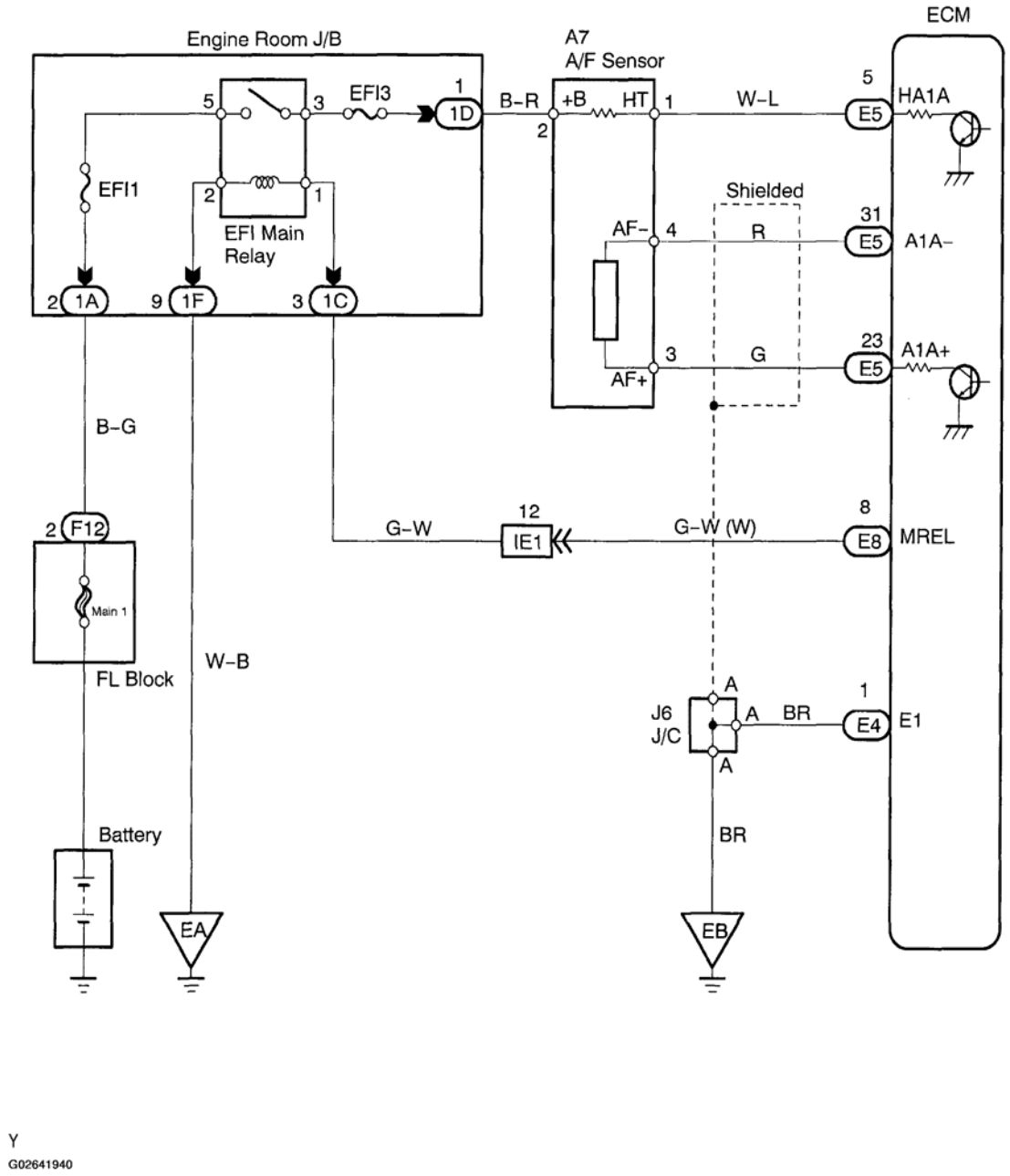

Fig. 242: Wiring Diagram - A/F Sensor Circuit
Courtesy of TOYOTA MOTOR SALES, U.S.A., INC.

cardiagn.com

CONFIRMATION DRIVING PATTERN

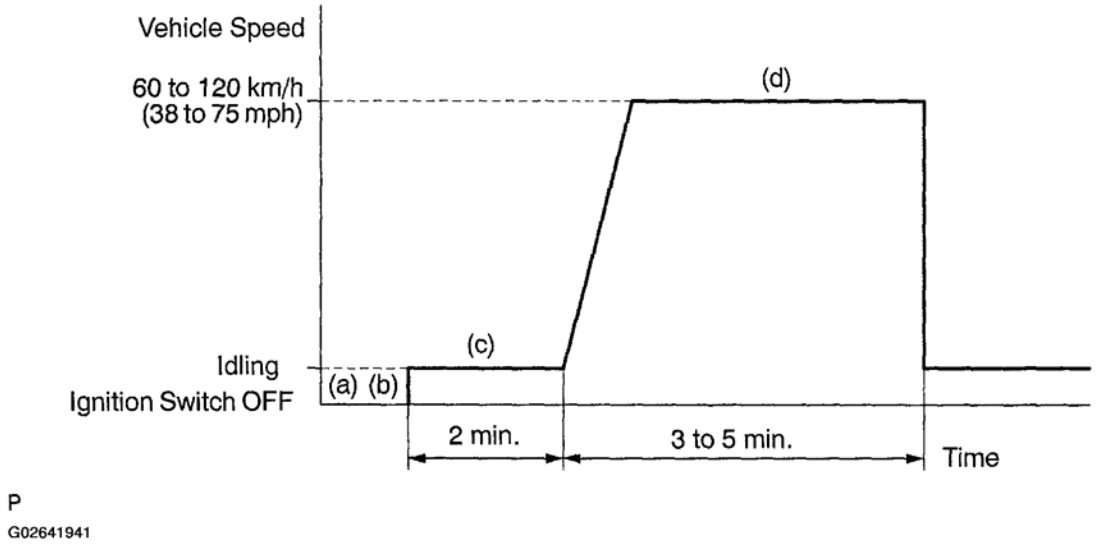

Fig. 243: Vehicle Speed Graph
Courtesy of TOYOTA MOTOR SALES, U.S.A., INC.

a. Connect the hand-held tester to the DLC3.
b. Switch the hand-held tester from normal mode to check mode (see **PRE-CHECK**).
c. Start the engine and warm it up for 2 minutes with all the accessory switched OFF.
d. Drive the vehicle at 60 to 120 km/h (38 to 75 mph) and engine speed at 1,400 to 3,200 RPM for 3 to 5 minutes.

HINT:

If a malfunction exists, the MIL will light up during step (d).

NOTE:

- **If the conditions in this test are not strictly followed, detecting the malfunction will not be possible.**
- **If you do not have a hand-held tester, turn the ignition switch OFF after performing steps (b) and (c), then perform steps (b) and (c) again.**

INSPECTION PROCEDURE

HINT:

Hand-held tester only:

It is possible the malfunctioning area can be found using the ACTIVE TEST A/F CONTROL operation. The A/F CONTROL operation can determine if the A/F sensor, heated oxygen sensor or other potential trouble

cardiagn.com

areas are malfunctioning or not.

a. Perform the ACTIVE TEST A/F CONTROL operation.

HINT:

The A/F CONTROL operation lowers the injection volume 12.5% or increases the injection volume 25%.

1. Connect the hand-held tester to the DLC3 on the vehicle.
2. Turn the ignition switch ON.
3. Warm up the engine by running the engine at 2,500 RPM for approximately 90 seconds.
4. Select the item DIAGNOSIS / ENHANCED OBD II / ACTIVE TEST / A/F CONTROL.
5. Perform A/F CONTROL with the engine idle (press the right or left button).

Result:

A/F sensor reacts in accordance with increase and decrease of injection volume:

+25 % --> Rich output: less than 3.0 V

-12.5 % --> Lean output: more than 3.35 V

Heated oxygen sensor reacts in accordance with increase and decrease of injection volume:

+25 % --> Rich output: more than 0.55 V

-12.5 % --> Lean output: less than 0.4 V

NOTE: The A/F sensor output has a few seconds of delay and the heated oxygen sensor output has about 20 seconds of delay.

cardiagn.com

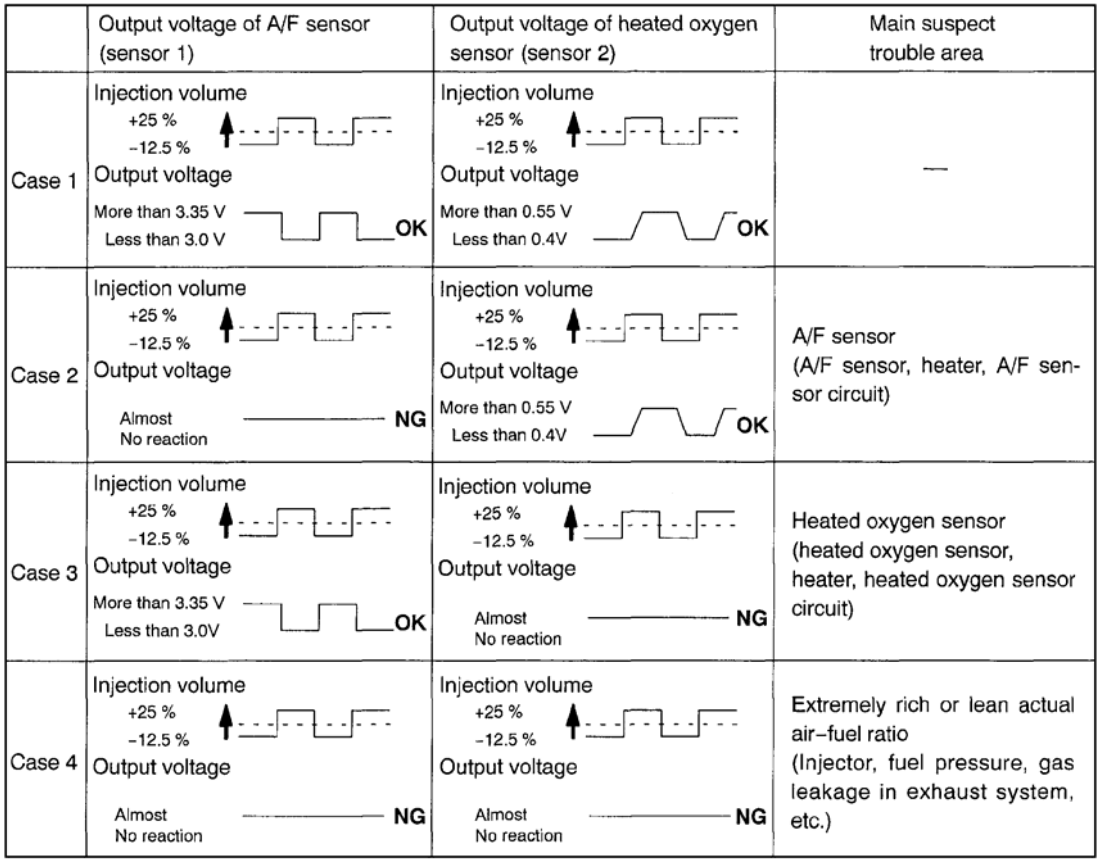

Fig. 244: A/F Sensor Output Voltage Graph (Sensor 1/Sensor 2)
Courtesy of TOYOTA MOTOR SALES, U.S.A., INC.

The following A/F CONTROL procedure enables a technician to check and graph the voltage outputs of both the A/F sensor and the heated oxygen sensor.

For displaying the graph, enter "ACTIVE TEST / A/F CONTROL / USER DATA", select AFS B1S1 and O2S B1S2" by pressing "YES" and push "ENTER". Then, press "F4".

HINT:

- A low A/F sensor voltage could be caused by a rich air fuel mixture. Check for conditions that might cause the engine to run with a rich air fuel mixture.
- A high A/F sensor voltage could be caused by a lean air fuel mixture. Check for conditions that might cause the engine to run with a lean air fuel mixture.
- Read freeze frame data using the hand-held tester or the OBD II scan tool. Freeze frame data records the engine conditions when a malfunction is detected. When troubleshooting, freeze frame data can help determine if the vehicle was running or stopped, if the engine was warmed up or not, if the air-fuel ratio was lean or rich, and other data from the time the malfunction occurred.

cardiagn.com

1. **Are there any other codes (besides DTC P2195 and/or P2196) being output?**

   HINT:

   If any other codes besides P2195 and/or P2196 are output, perform the troubleshooting for those DTCs first.

   YES: Go to relevant DTC chart (see DIAGNOSTIC TROUBLE CODE CHART).

   NO: Go To Next Step

2. **Connect hand-held tester or OBD II scan tool, and read value for voltage output of A/F sensor.**

   PREPARATION:

   a. Connect the hand-held or the OBD II scan tool to the DLC3.
   b. Warm up the A/F sensor with the engine at 2,500 RPM for approximately 90 seconds.
   c. Read A/F sensor voltage on the hand-held tester or OBD II scan tool.

   CHECK:

   a. Hand-held tester only:

      On the hand-held tester, enter the following menus: DIAGNOSIS / ENHANCED OBD II / SNAPSHOT / MANUAL SNAPSHOT / USER DATA. Read the values.

   b. Select "AFS B1 S1/ENGINE SPD" and press button "YES".
   c. Monitor the A/F sensor voltage carefully.
   d. Check the A/F sensor voltage under the condition as follows.
      1. Allow engine to idle for 30 seconds.
      2. Engine is racing at approximately 2,500 RPM (when engine revolution is not suddenly changed).
      3. Raise the engine speed to 4,000 RPM and release the accelerator pedal fully quickly.

      OK:

      Standard:

      Conditions (1) and (2)

      Voltage changes a little in the vicinity of 3.3 V (between approx. 3.1 3.5 V) as shown in the illustration.

      Condition (3)

      A/F ratio sensor voltage increases to 3.8 V or more during engine deceleration (when fuel cut)

cardiagn.com

as shown in the illustration.

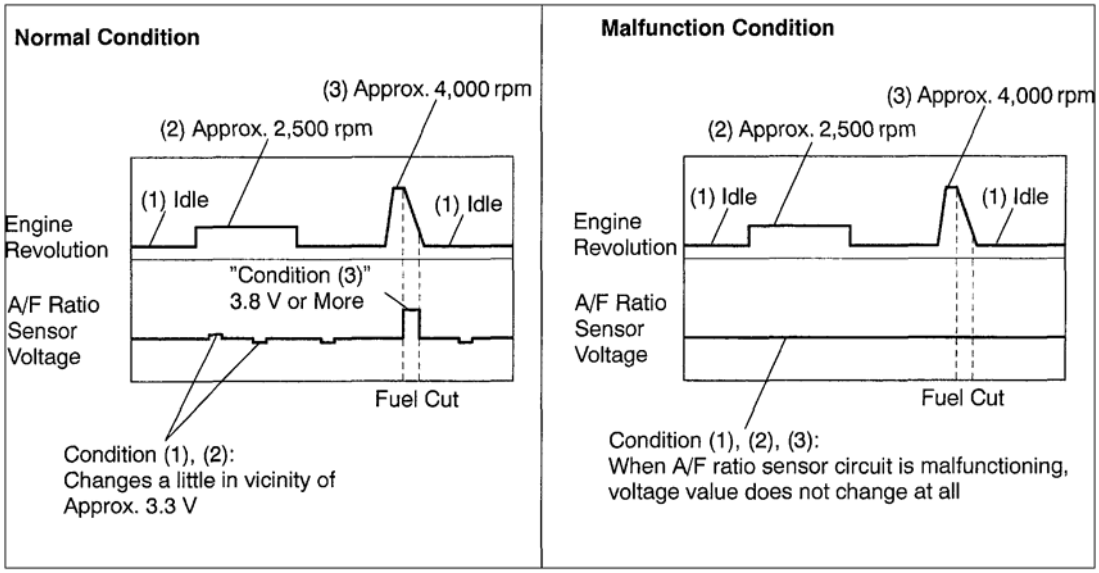

Fig. 245: Engine Revolution & A/F Sensor Voltage Graph (Normal & Malfunction Condition)
Courtesy of TOYOTA MOTOR SALES, U.S.A., INC.

HINT:

- Whenever the output voltage of the A/F sensor remains at approximately 3.3 V (0.660 V)* (see dwg. 2) under any conditions as well as the above conditions, the A/F sensor may have an open-circuit. (This will happen also when the A/F sensor heater has an open-circuit.)
- Whenever the output voltage of the A/F sensor remains at a certain value of approximately 3.8 V (0.76 V)* or more, or 2.8 V (0.56 V)* or less (see dwg. 2) under any conditions as well as the above conditions, the A/F sensor may have a short-circuit.
- The ECM will stop fuel injection (fuel cut) during engine deceleration. This will cause a lean condition and should result in a momentary increase in the A/F ratio sensor voltage.
- The ECM must establish a closed throttle position learned value to perform fuel cut. If the battery terminal has been disconnected, the vehicle must be driven over 16 km/h (10 mph) to allow the ECM to relearn the closed throttle position.
- When the vehicle is driven:

  In the case that the output voltage of the A/F sensor is below 2.8 V (0.76 V)* during fuel enrichment (for example, when the vehicle tries to overtake another vehicle on a highway, the vehicle speed is suddenly increased with the accelerator pedal fully depressed), the A/F sensor are functioning normally.

- The A/F sensor is a current output element, and therefore the current is converted into voltage inside the ECM. If measuring voltage at connectors of A/F ratio sensor or ECM, you can obtain a

cardiagn.com

constant voltage.

*: When using the OBD II scan tool (excluding hand-held tester).

OK: Go to step 13.
NG: Go To Next Step

3. **Check resistance of A/F sensor heater (see INSPECTION).**
   NG: Replace A/F sensor.
   OK: Go To Next Step
4. **Check EFI main relay.**

PREPARATION:

Remove the EFI main relay from the engine room J/B.

CHECK:

Inspect the EFI main relay.

OK:

EFI MAIN RELAY TERMINALS RESISTANCE

Tester Connection	Specified Condition
3-5	10 kohm or higher
3-5	Below 1 ohm (when battery voltage is applied to terminals 1 and 2)

cardiagn.com

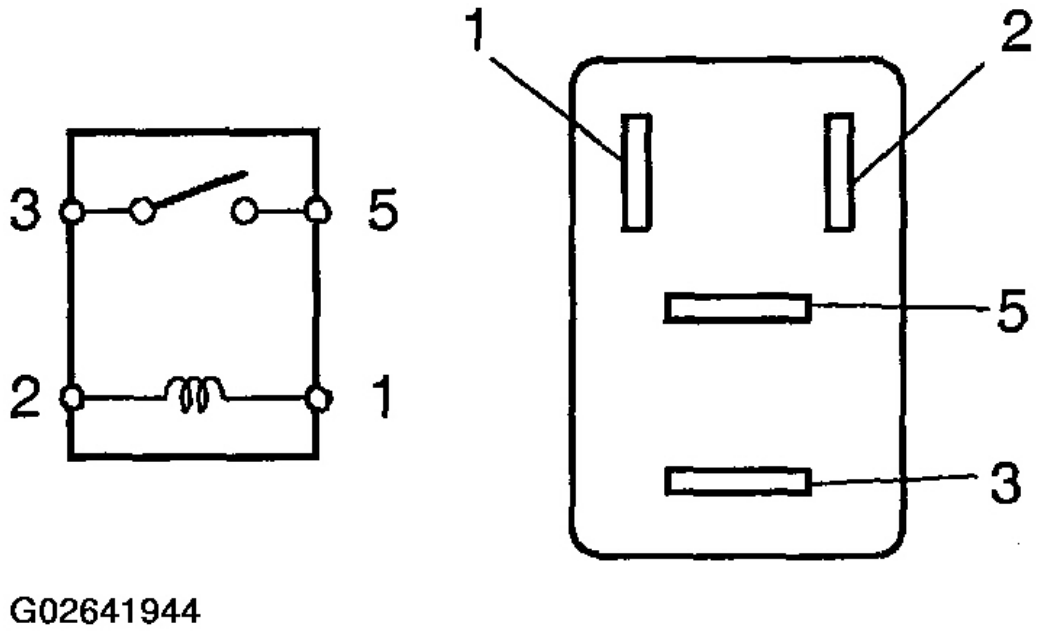

Fig. 246: Identifying EFI Main Relay Terminals
Courtesy of TOYOTA MOTOR SALES, U.S.A., INC.

NG: Replace EFI main relay.

OK: Go To Next Step

5. **Check for open and short in wire harness between ECM and A/F sensor (see HOW TO USE THE DIAGNOSTIC CHART AND INSPECTION PROCEDURE).**

Reference: Bank 1 Sensor 1 System Drawing

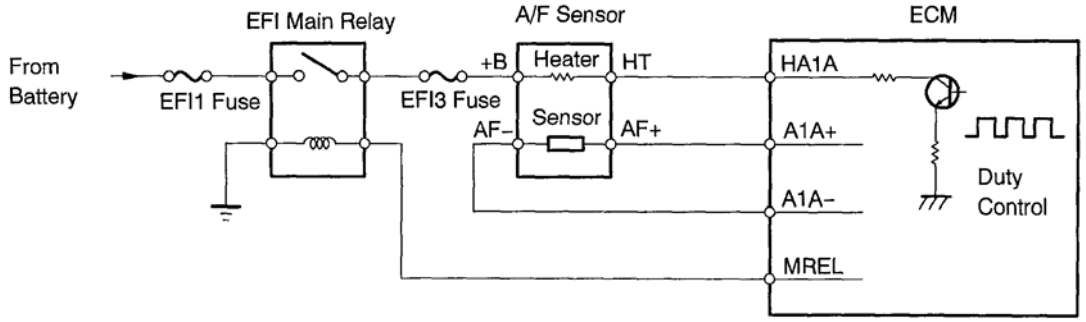

cardiagn.com

Fig. 247: A/F Sensor Circuit Diagram (Bank 1 Sensor 1)
Courtesy of TOYOTA MOTOR SALES, U.S.A., INC.

NG: Repair or replace harness and connector.
OK: Go To Next Step

6. **Check air induction system (see SFI SYSTEM).**

CHECK:

Check for vacuum leaks in the air induction system.

NG: Repair or replace.
OK: Go To Next Step

7. **Check fuel pressure (see FUEL PUMP).**

CHECK:

Check fuel pressure (high or low pressure).

NG: Check and repair fuel pump, fuel pipe line and filter.
OK: Go To Next Step

8. **Check injector injection (see INSPECTION).**

CHECK:

Check injector injection (high or low injection quantity or poor injection pattern).

NG: Replace injector.
OK: Go To Next Step

9. **Replace A/F sensor.**
GO: To Next step

10. **Perform confirmation driving pattern.**

HINT:

Clear all DTCs prior to performing the confirmation driving pattern.

GO: To Next step

11. **Are there DTCs P2195 and/or P2196 being output again?**
YES: Replace ECM (see ENGINE CONTROL MODULE (ECM)).
NO: Go To Next Step

12. **Did vehicle run out of fuel in past?**
NO: Check for intermittent problems (see PRE-CHECK).

cardiagn.com

YES: A/F sensor circuit DTCs are caused by shortage of fuel.

13. **Perform confirmation driving pattern.**

    HINT:

    Clear all DTCs prior to performing the confirmation driving pattern.

    GO: To Next step

14. **Are there DTCs P2195 and/or P2196 being output again?**

    NO: Go to step 18.

    YES: Go To Next Step

15. **Replace A/F sensor.**

    GO: To Next step

16. **Perform confirmation driving pattern.**

    HINT:

    Clear all DTCs prior to performing the confirmation driving pattern.

    GO: To Next step

17. **Are there A/F sensor circuit DTC codes being output again?**

    YES: Replace ECM (see ENGINE CONTROL MODULE (ECM)) and perform confirmation driving pattern.

    NO: Go To Next Step

18. **Did vehicle run out of fuel in past?**

    NO: Check for intermittent problems (see PRE-CHECK).

    YES: A/F sensor circuit DTCs are caused by shortage of fuel.

DTC P2238, P2239, P2252, P2253: OXYGEN SENSOR PUMPING CURRENT CIRCUIT LOW/HIGH (FOR A/F SENSOR) (BANK 1 SENSOR 1)

HINT:

Although the title (DTC description) says "oxygen sensor", this DTC is related to the "A/F sensor".

CIRCUIT DESCRIPTION

cardiagn.com

DTC No.	DTC Detection Condition	Trouble Area
P2238	• A/F sensor circuit low (bank 1 sensor 1) • A/F sensor admittance is less than 0.022 1/Ω	HINT: MAIN trouble area • Open in A/F sensor circuit
P2238	• Condition (a) continues for 5.0 seconds or more: (a) AF+ is 0.5 V or less • Condition (a) continues for 5.0 seconds or more: (a) (AF+) – (AF–) is 0.1 V or less	• Open or short in A/F sensor circuit • A/F sensor • A/F sensor heater • EFI main relay • A/F sensor heater and EFI main relay circuit • ECM
P2239	A/F sensor circuit high (bank 1 sensor 1)	HINT: MAIN trouble area • Short in A/F sensor circuit
P2239	• Condition (a) continues for 5.0 seconds or more: (a) AF+ is more than 4.5 V • Condition (a) continues for 5.0 seconds or more: (a) (AF+) – (AF–) is more than 0.8 V	• Open or short in A/F sensor circuit • A/F sensor • A/F sensor heater • EFI main relay • A/F sensor heater and EFI main relay circuit • ECM
P2252	Condition (a) continues for 5.0 seconds or more: (a) AF– is 0.5 V or less	• Open or short in A/F sensor circuit • A/F sensor • A/F sensor heater • EFI main relay • A/F sensor heater and EFI main relay circuit • ECM
P2253	Condition (a) continues for 5.0 seconds or more: (a) AF– is more than 4.5 V	

G02641946

Fig. 248: DTC P2238, P2239, P2252 & P2253 - DTC Detection Condition Chart
Courtesy of TOYOTA MOTOR SALES, U.S.A., INC.

DTC P2238, P2239, P2252, P2253: OXYGEN SENSOR PUMPING CURRENT CIRCUIT LOW/HIGH (FOR A/F SENSOR) (BANK 1 SENSOR 1)

MONITOR DESCRIPTION

The air-fuel ratio (A/F) sensor varies its voltage output in proportion to the air-fuel ratio. If impedance (alternating current resistance) or voltage output of the sensor deviates greatly from the standard, the ECM determines if an open or short malfunction is in the A/F sensor circuit.

MONITOR STRATEGY

MONITOR STRATEGY

Related DTCs	P2238: A/F sensor (bank1) open circuit between AF+ and AF- P2238: A/F sensor (bank1) short circuit between AF+ and AF- P2238: A/F sensor (bank1) short circuit between AF+ and GND P2239: A/F sensor (bank1) short circuit between AF+ and +B P2252: A/F sensor (bank1) short circuit between AF- and GND P2253: A/F sensor (bank1) short circuit between AF- and +B
Required sensors / components (Main)	A/F sensor
Required sensors / components (Related)	ECT sensor, CKP sensor
Frequency of operation	Once per driving cycle

cardiagn.com

Duration	20 sec.
MIL operation	2 driving cycles
Sequence of operation	None

TYPICAL ENABLING CONDITIONS

TYPICAL ENABLING CONDITIONS

The monitor will run whenever the following DTCs are not present	See **PRE-CHECK**

A/F sensor open circuit between AF+ and AF- (P2238):

TYPICAL ENABLING CONDITIONS (A/F SENSOR OPEN CIRCUIT BETWEEN AF+ AND AF- (P2238))

Battery voltage	10.5 V or more
ECT	20°C (68°F) or more
Engine condition	Running
Time after engine start	20 sec. or more
Time after A/F sensor heating	20 sec. or more

Others:

TYPICAL ENABLING CONDITIONS (OTHERS)

Battery voltage	10.5 V or more
Time after ignition switch is OFF to ON	5 sec. or more

TYPICAL MALFUNCTION THRESHOLDS

A/F sensor open circuit between AF+ and AF- (P2238):

TYPICAL MALFUNCTION THRESHOLDS (A/F SENSOR OPEN CIRCUIT BETWEEN AF+ AND AF- (P2238))

A/F sensor admittance	Less than 0.022 1/ohm

A/F sensor short circuit between AF+ and AF- (P2238):

TYPICAL MALFUNCTION THRESHOLDS (A/F SENSOR SHORT CIRCUIT BETWEEN AF+ AND AF- (P2238))

Difference between AF+ and AF- voltage	Less than 0.1 V

A/F sensor short circuit between AF+ and GND (P2238):

TYPICAL MALFUNCTION THRESHOLDS (A/F SENSOR SHORT CIRCUIT BETWEEN AF+ AND GND (P2238))

AF+ voltage	Less than 0.5 V

cardiagn.com

A/F sensor short circuit between AF+ and +B (P2239):

TYPICAL MALFUNCTION THRESHOLDS (A/F SENSOR SHORT CIRCUIT BETWEEN AF+ AND +B (P2239))

AF+ voltage	4.5 V or more

A/F sensor short circuit between AF- and GND (P2252):

VOLTAGE CHECK

AF-voltage	Less than 0.5 V

A/F sensor short circuit between AF- and +B (P2253):

TYPICAL MALFUNCTION THRESHOLDS (A/F SENSOR SHORT CIRCUIT BETWEEN AF+ AND +B (P2253))

AF-voltage	4.5 V or more

WIRING DIAGRAM

See wiring diagram under **DTC P2195, P2196: OXYGEN (A/F) SENSOR SIGNAL STUCK LEAN (BANK 1 SENSOR 1) & OXYGEN (A/F) SENSOR SIGNAL STUCK RICH (BANK 1 SENSOR 1)**.

INSPECTION PROCEDURE

HINT:

Hand-held tester only:

It is possible the malfunctioning area can be found using the ACTIVE TEST A/F CONTROL operation. The A/F CONTROL operation can determine if the A/F sensor, heated oxygen sensor or other potential trouble areas are malfunctioning or not.

a. Perform the ACTIVE TEST A/F CONTROL operation.

   HINT:

   The A/F CONTROL operation lowers the injection volume 12.5% or increases the injection volume 25%.

   1. Connect the hand-held tester to the DLC3 on the vehicle.
   2. Turn the ignition switch ON.
   3. Warm up the engine by running the engine at 2,500 RPM for approximately 90 seconds.
   4. Enter the following menus: DIAGNOSIS / ENHANCED OBD II / ACTIVE TEST / A/F CONTROL.
   5. Perform the A/F CONTROL operation with the engine idle (press the right or left button).

cardiagn.com

Result:

A/F sensor reacts in accordance with increase and decrease of injection volume:

+25 % --> Rich output: less than 3.0 V

-12.5 % --> Lean output: more than 3.35 V

Heated oxygen sensor reacts in accordance with increase and decrease of injection volume:

+25 % --> Rich output: more than 0.55 V

-12.5 % --> Lean output: less than 0.4 V

NOTE: The A/F sensor output has a few seconds of delay and the heated oxygen sensor output has about 20 seconds of delay.

	Output voltage of A/F sensor (sensor 1)	Output voltage of heated oxygen sensor (sensor 2)	Main suspect trouble area
Case 1	Injection volume +25 % −12.5 % Output voltage More than 3.35 V Less than 3.0 V OK	Injection volume +25 % −12.5 % Output voltage More than 0.55 V Less than 0.4V OK	—
Case 2	Injection volume +25 % −12.5 % Output voltage Almost No reaction NG	Injection volume +25 % −12.5 % Output voltage More than 0.55 V Less than 0.4V OK	A/F sensor (A/F sensor, heater, A/F sensor circuit)
Case 3	Injection volume +25 % −12.5 % Output voltage More than 3.35 V Less than 3.0V OK	Injection volume +25 % −12.5 % Output voltage Almost No reaction NG	Heated oxygen sensor (heated oxygen sensor, heater, heated oxygen sensor circuit)
Case 4	Injection volume +25 % −12.5 % Output voltage Almost No reaction NG	Injection volume +25 % −12.5 % Output voltage Almost No reaction NG	Extremely rich or lean actual air−fuel ratio (Injector, fuel pressure, gas leakage in exhaust system, etc.)

G02641947

Fig. 249: A/F Sensor Output Voltage Graph (Sensor 1/Sensor 2)
Courtesy of TOYOTA MOTOR SALES, U.S.A., INC.

cardiagn.com

The following A/F CONTROL procedure enables a technician to check and graph the voltage outputs of both the A/F sensor and the heated oxygen sensor.

For displaying the graph, enter "ACTIVE TEST / A/F CONTROL / USER DATA", select "AFS B1S1 and O2S B1S2" by pressing "YES" and push "ENTER". Then press "F4".

HINT:

- If DTC P2238, P2239, P2252 or P2253 is displayed, check the bank 1 sensor 1 circuit.
- Read freeze frame data using the hand-held tester or the OBD II scan tool. Freeze frame data records the engine conditions when a malfunction is detected. When troubleshooting, freeze frame data can help determine if the vehicle was running or stopped, if the engine was warmed up or not, if the air-fuel ratio was lean or rich, and other data from the time the malfunction occurred.

1. **Check resistance of A/F sensor heater (see INSPECTION).**

   NG: Replace A/F sensor.

   OK: Go To Next Step

2. **Check EFI main relay.**

   PREPARATION:

   Remove the EFI main relay from the engine room J/B.

   CHECK:

   Inspect the EFI main relay.

   OK:

   EFI MAIN RELAY TERMINALS RESISTANCE

Tester Connection	Specified Condition
3-5	10 kohm or higher
3-5	Below 1 ohm (when battery voltage is applied to terminals 1 and 2)

cardiagn.com

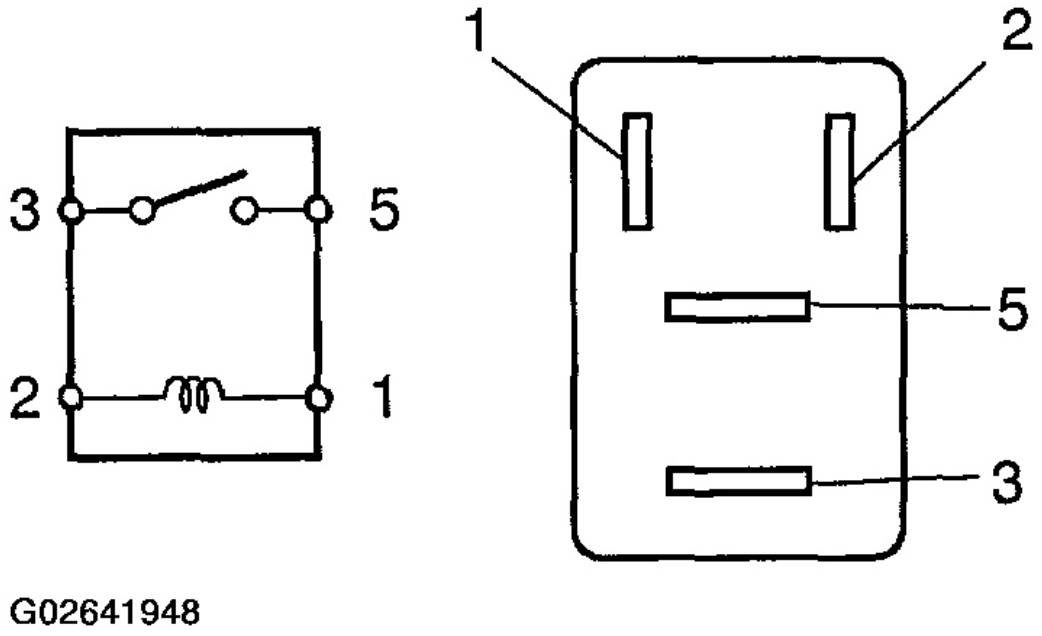

Fig. 250: Identifying EFI Main Relay Terminals
Courtesy of TOYOTA MOTOR SALES, U.S.A., INC.

NG: Replace EFI main relay.

OK: Go To Next Step

3. **Check for open and short in wire harness between ECM and A/F sensor (see HOW TO USE THE DIAGNOSTIC CHART AND INSPECTION PROCEDURE).**

Reference: Bank 1 Sensor 1 System Drawing

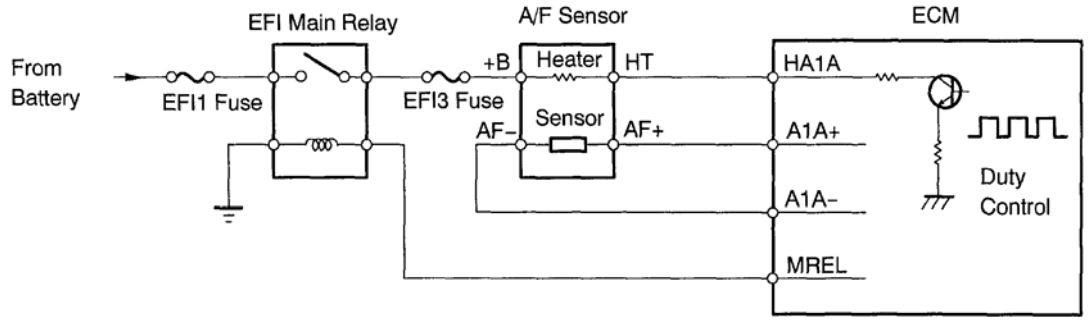

cardiagn.com

Fig. 251: A/F Sensor Circuit Diagram (Bank 1/Sensor 1)
Courtesy of TOYOTA MOTOR SALES, U.S.A., INC.

NG: Repair or replace harness and connector.

OK: Replace ECM (see ENGINE CONTROL MODULE (ECM)).

DTC P2A00: A/F SENSOR CIRCUIT SLOW RESPONSE (BANK 1 SENSOR 1)

CIRCUIT DESCRIPTION

Refer to circuit description under **DTC P2195, P2196: OXYGEN (A/F) SENSOR SIGNAL STUCK LEAN (BANK 1 SENSOR 1) & OXYGEN (A/F) SENSOR SIGNAL STUCK RICH (BANK 1 SENSOR 1)**.

DTC No.	DTC Detection Condition	Trouble Area
P2A00	In conditions (a), (b) and (c), when A/F sensor output voltage change value is below regular value against fuel trim change value, ECM judges that A/F sensor circuit has slow response (2 trip detection logic): (a) After engine is warmed up (b) During vehicle driving at engine speed 1,400 rpm or more (c) Vehicle speed 60 to 120 km/h (37 to 74 mph)	• Open or short in A/F sensor circuit (bank 1 sensor 1) circuit • A/F sensor (bank 1 sensor 1) • A/F sensor heater • EFI main relay • A/F sensor heater and EFI main relay circuit • Fuel pressure • Injector • PCV hose connection • ECM

G02641950

Fig. 252: DTC P2A00 - DTC Detection Condition Chart
Courtesy of TOYOTA MOTOR SALES, U.S.A., INC.

MONITOR DESCRIPTION

cardiagn.com

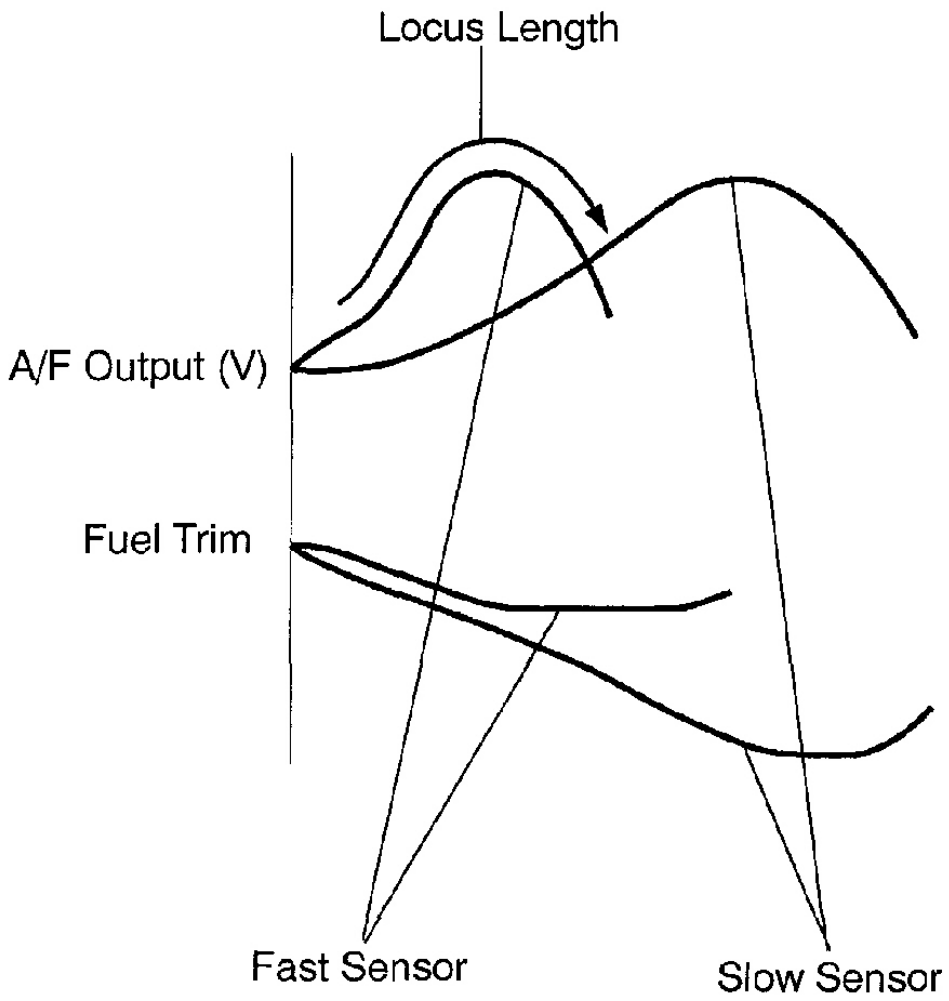

Y

G02641951

Fig. 253: A/F Sensor Output Voltage Graph
Courtesy of TOYOTA MOTOR SALES, U.S.A., INC.

The air-fuel ratio (A/F) sensor varies its output voltage in proportion to the air-fuel ratio. Based on the output voltage, the ECM determines if the air-fuel ratio is RICH or LEAN and adjusts the stoichiometric air-fuel ratio. The ECM also checks the fuel injection volume compensation value to check if the A/F sensor is deteriorating or not. A/F sensor response deterioration is determined by the ratio of the A/F sensor output voltage variation and fuel trim variation

cardiagn.com

MONITOR STRATEGY

MONITOR STRATEGY

Related DTCs	P2A00: A/F sensor slow response
Required sensors/components (Main)	A/F sensor
Required sensors/components (Related)	VSS, CKP sensor
Frequency of operation	Once per driving cycle
Duration	60 sec.
MIL operation	2 drive cycles
Sequence of operation	None

TYPICAL ENABLING CONDITIONS

TYPICAL ENABLING CONDITIONS

The monitor will run whenever the following DTCs are not present	See **PRE-CHECK**
Engine condition	Running
Time after engine start	120 sec. or more
Fuel system status	Closed Loop
A/F sensor status	Activated
Idle	OFF
Time after idle OFF	20 sec. or more
Engine RPM	1,400 to 3,200 rpm
Vehicle speed	37 to 74 mph (60 to 120 km/h)
Fuel cut	OFF
Time after fuel cut is OFF	20 sec. or more
Driving record for 20 sec. or more	25 mph (40 km/h) or more and 900 rpm or more

TYPICAL MALFUNCTION THRESHOLDS

TYPICAL MALFUNCTION THRESHOLDS

Response rate deterioration level	8 or more

MONITOR RESULT

Refer to **PRE-CHECK** for detailed information.

MONITOR RESULT

TEST ID	Description of TEST DATA	Conversion Factor	Unit	Description of TEST LIMIT
$06/$81	Response rate deterioration level	Multiply by 0.000244	N/A	Malfunction thresholds

WIRING DIAGRAM

cardiagn.com

See wiring diagram under **DTC P2195, P2196: OXYGEN (A/F) SENSOR SIGNAL STUCK LEAN (BANK 1 SENSOR 1) & OXYGEN (A/F) SENSOR SIGNAL STUCK RICH (BANK 1 SENSOR 1)**.

INSPECTION PROCEDURE

HINT:

Hand-held tester only:

It is possible the malfunctioning area can be found using the ACTIVE TEST A/F CONTROL operation. The A/F CONTROL operation can determine if the A/F sensor, heated oxygen sensor or other potential trouble areas are malfunctioning or not.

Perform the ACTIVE TEST A/F CONTROL operation.

HINT:

A/F CONTROL operation lowers the injection volume 12.5% or increases the injection volume 25%.

1. Connect the hand-held tester to the DLC3 on the vehicle.
2. Turn the ignition switch ON.
3. Warm up the engine with the engine speed at 2,500 RPM for approximately 90 seconds.
4. Enter the following menus: DIAGNOSIS / ENHANCED OBD II / ACTIVE TEST / A/F CONTROL.
5. Perform the A/F CONTROL operation with the engine idle (press the right or left button).

Result:

A/F sensor reacts in synchronizing with increase and decrease of injection volume

+25 % --> rich output: Less than 3.0 V

-12.5 % --> lean output: More than 3.35 V

Heated oxygen sensor reacts in synchronizing with increase and decrease of injection volume

+25 % --> rich output: More than 0.55 V

-12.5 % --> lean output: Less than 0.4 V

NOTE: However, there is a few second delay in the A/F sensor output. & there is about 20 seconds delay in the heated oxygen sensor.

cardiagn.com

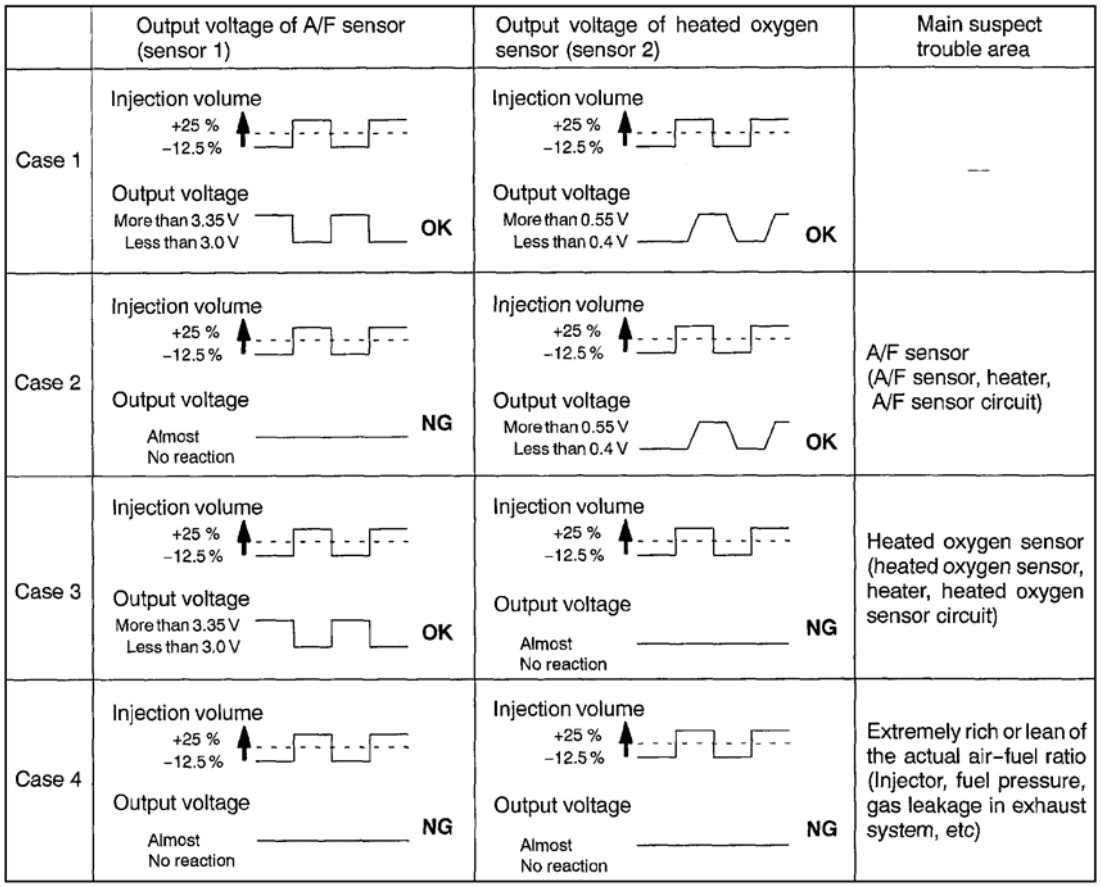

Fig. 254: A/F Sensor Output Voltage Graph (Sensor 1/Sensor 2)
Courtesy of TOYOTA MOTOR SALES, U.S.A., INC.

The following A/F CONTROL procedure enables a technician to check and graph the voltage outputs of both the A/F sensor and the heated oxygen sensor.

For displaying the graph, enter "ACTIVE TEST / A/F CONTROL / USER DATA", select "AFS B1S1 and O2S B1S2" by pressing "YES" and push "ENTER". Then press "F4".

HINT:

- DTC P2A00 may be also detected, when the air fuel ratio is stuck rich or lean.
- A low A/F sensor voltage could be caused by a rich air fuel mixture. Check for conditions that would cause the engine to run rich.
- A high A/F sensor voltage could be caused by a lean air fuel mixture. Check for conditions that would cause the engine to run lean.
- Read freeze frame data using the hand-held tester or the OBD II scan tool. Freeze frame data records the engine conditions when a malfunction is detected. When troubleshooting, freeze frame data can help determine if the vehicle was running or stopped, if the engine was warmed up or not, if the air-fuel ratio

cardiagn.com

was lean or rich, and other data from the time the malfunction occurred.

1. **Are there any other codes (besides DTC P2A00) being output?**
   YES Go to relevant DTC chart (see DIAGNOSTIC TROUBLE CODE CHART).
   NO Go To Next Step
2. **Connect hand-held tester or OBD II scan tool, and read value for voltage output of A/F sensor.**

PREPARATION:

a. Connect the hand-held tester or the OBD II scan tool to the DLC 3.
b. Warm up the A/F sensor (bank 1 sensor 1) with the engine at 2,500 RPM for approximately 90 seconds.
c. Read the A/F sensor voltage on the hand-held tester or OBD II scan tool.

CHECK:

a. Hand-held tester only:

   On the hand-held tester, enter the following menus: DIAGNOSIS / ENHANCED OBD II / SNAPSHOT / MANUAL SNAPSHOT / USER DATA. Read the values.

b. Select "AFS B1 S1/ENGINE SPD" and press button "YES".
c. Monitor the A/F sensor voltage carefully.
d. Check the A/F sensor voltage under the condition as follows.
   1. Allow the engine to idle for 30 seconds.
   2. Engine is racing at approximately 2,500 RPM (when engine revolution is not suddenly changed).
   3. Raise the engine speed to 4,000 RPM and release the accelerator pedal fully quickly.

OK:

Standard:

Conditions (1) and (2)

Voltage changes a little in the vicinity of 3.3 V (0.66 V)* (between approximately 3.1 to 3.5 V) as shown.

Condition (3)

A/F ratio sensor voltage increases to 3.8 V (0.76 V)* or more during engine deceleration (when fuel cut) as shown.

cardiagn.com

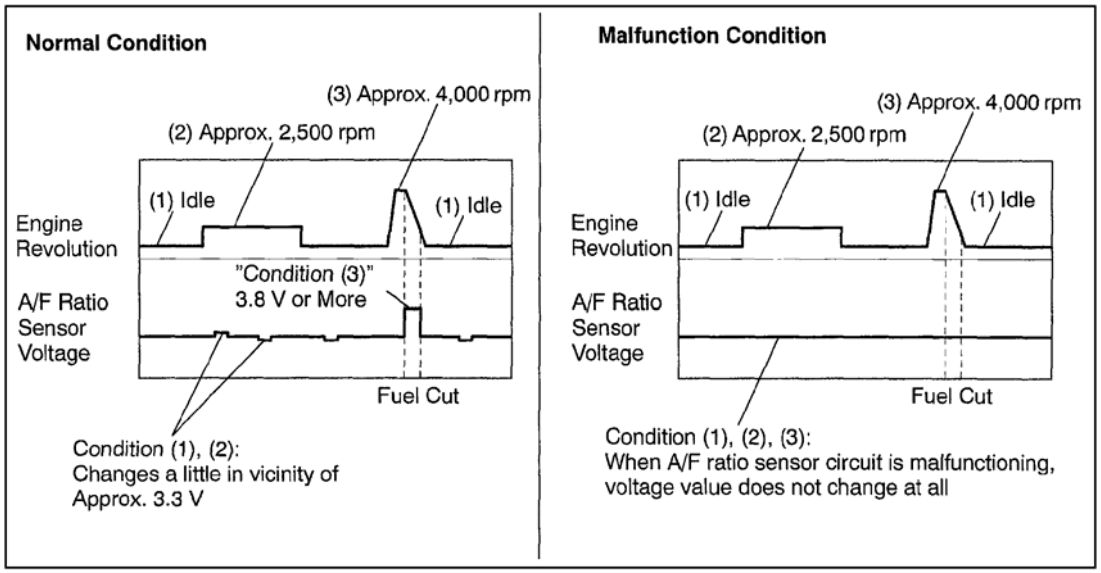

Fig. 255: Engine Revolution & A/F Sensor Voltage Graph (Normal & Malfunction Condition)
Courtesy of TOYOTA MOTOR SALES, U.S.A., INC.

HINT:

- Whenever the A/F sensor output voltage remains at approximately 3.3 V (0.660 V)* (see "Malfunction Condition" graphic) under any condition as well as the above conditions, the A/F sensor may have an open-circuit. This will happen also when the A/F sensor heater has an open-circuit.
- Whenever the A/F sensor output voltage remains at a certain value of approximately 3.8 V (0.76 V) * or more, or 2.8 V (0.56 V)* or less (see "Malfunction Condition" graphic) under any condition as well as the above conditions, the A/F sensor may have a short-circuit.
- The ECM will stop fuel injection (fuel is cut) during engine deceleration. This will cause a LEAN condition and should result in a momentary increase in the A/F sensor output voltage.
- The ECM must establish a closed throttle position learned value to perform fuel cut. If the battery terminal has been disconnected, the vehicle must be driven over 16 km/h (10 mph) to allow the ECM to relearn the closed throttle position.
- When the vehicle is driven:

  The output voltage of the A/F sensor may be below 2.8 V (0.76 V)* during fuel enrichment. For the vehicle, this translates to a sudden increase in speed with the accelerator pedal fully depressed when trying to overtake another vehicle. The A/F sensor is functioning normally.

- The A/F sensor is a current output element, and therefore the current is converted into voltage inside the ECM. If measuring voltage at connectors of the A/F sensor or ECM, you will observe a constant voltage.

cardiagn.com

*: Voltage when using the OBD II scan tool.

OK: Go to step 17.
NG: Go To Next Step

3. **Check resistance of A/F sensor heater (see INSPECTION).**
   NG: Replace A/F sensor.
   OK: Go To Next Step
4. **Check EFI main relay.**

PREPARATION:

Remove the EFI main relay from the engine room J/B.

CHECK:

Inspect the EFI main relay.

OK:

EFI MAIN RELAY TERMINALS RESISTANCE

Tester Connection	Specified Condition
3-5	10 kohm or higher
3-5	Below 1 ohm (when battery voltage is applied to terminals 1 and 2)

cardiagn.com

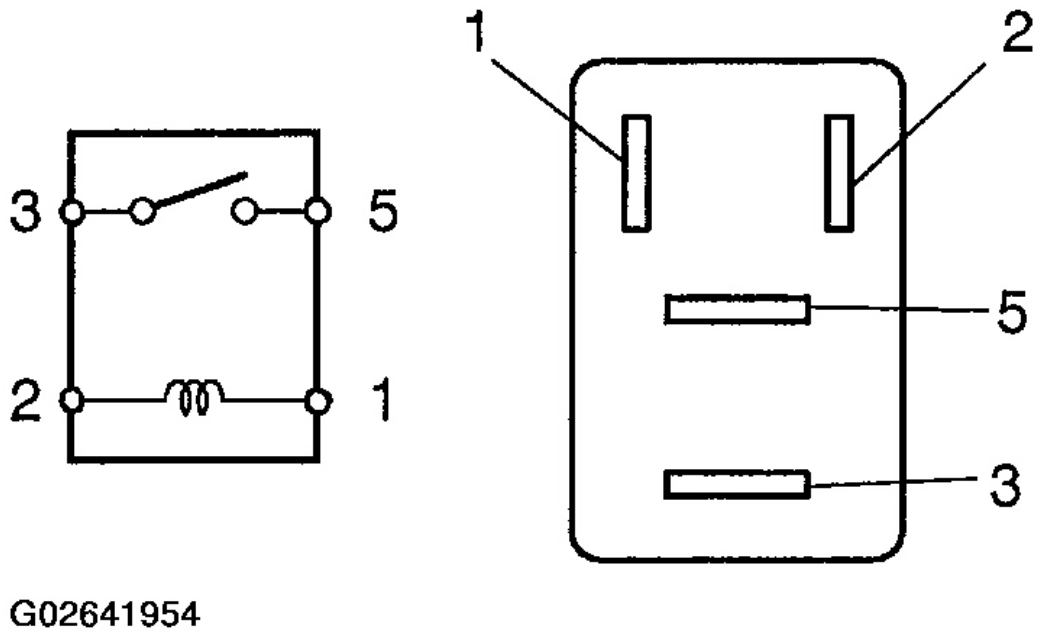

Fig. 256: Identifying EFI Main Relay Terminals
Courtesy of TOYOTA MOTOR SALES, U.S.A., INC.

NG: Replace EFI main relay.

OK: Go To Next Step

5. **Check for open and short in wire harness between ECM and A/F sensor (see HOW TO USE THE DIAGNOSTIC CHART AND INSPECTION PROCEDURE).**

References: Bank 1 Sensor 1 System Drawing

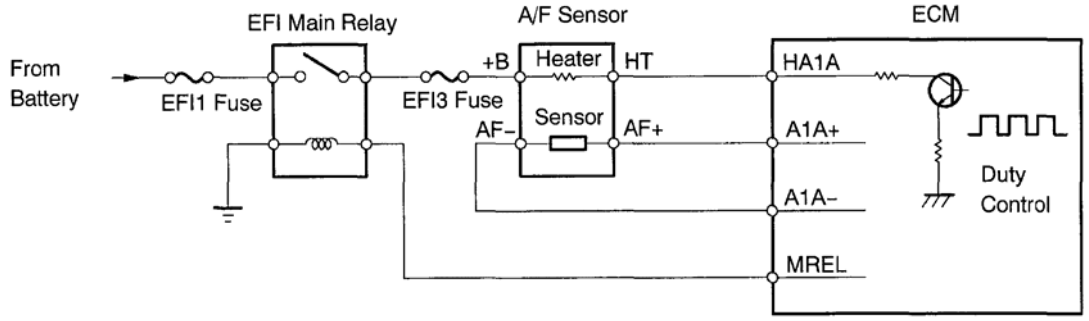

cardiagn.com

Fig. 257: A/F Sensor Circuit Diagram (Bank 1 Sensor 1)
Courtesy of TOYOTA MOTOR SALES, U.S.A., INC.

NG: Repair or replace harness and connector.

OK: Go To Next Step

6. **Check air induction system (see SFI SYSTEM).**

CHECK:

Check for vacuum leaks in the air induction system.

NG: Repair or replace.

OK: Go To Next Step

7. **Check connection of PCV hose.**

NG: Repair or replace PCV hose.

OK: Go To Next Step

8. **Check fuel pressure (see FUEL PUMP).**

CHECK:

Check fuel pressure (high or low fuel pressure)

NG: Check and repair fuel pump, fuel pipe line and filter.

OK: Go To Next Step

9. **Check injector injection (see INSPECTION).**

CHECK:

Check injector injection (high or low fuel injection quantity or poor injection pattern).

NG: Replace injector.

OK: Go To Next Step

10. **Replace A/F sensor.**

Go: To Next Step

11. **Perform confirmation driving pattern (see DTC P2195, P2196: OXYGEN (A/F) SENSOR SIGNAL STUCK LEAN (BANK 1 SENSOR 1) & OXYGEN (A/F) SENSOR SIGNAL STUCK RICH (BANK 1 SENSOR 1)).**

HINT:

Clear all DTCs prior to performing the confirmation driving pattern.

Go: To Next Step

cardiagn.com

12. **Is there DTC P2A00 being output again?**

    YES Replace ECM (see ENGINE CONTROL MODULE (ECM)) and perform confirmation driving pattern.

    NO Go To Next Step
13. **Confirm if vehicle has run out of fuel in past?**

    NO Check for intermittent problems (see PRE-CHECK).

    YES DTC P2A00 is caused by running out of fuel.
14. **Perform confirmation driving pattern (see DTC P2195, P2196: OXYGEN (A/F) SENSOR SIGNAL STUCK LEAN (BANK 1 SENSOR 1) & OXYGEN (A/F) SENSOR SIGNAL STUCK RICH (BANK 1 SENSOR 1)).**

    HINT:

    Clear all DTCs prior to performing the confirmation driving pattern.

    Go: To Next Step
15. **Is there DTC P2A00 being output again?**

    NO Go to step 19.

    YES Go To Next Step
16. **Replace A/F sensor.**

    Go: To Next Step
17. **Perform confirmation driving pattern (see DTC P2195, P2196: OXYGEN (A/F) SENSOR SIGNAL STUCK LEAN (BANK 1 SENSOR 1) & OXYGEN (A/F) SENSOR SIGNAL STUCK RICH (BANK 1 SENSOR 1)).**

    HINT:

    Clear all DTCs prior to performing the confirmation driving pattern.

    Go: To Next Step
18. **Is there DTC P2A00 being output again?**

    YES Replace ECM (see ENGINE CONTROL MODULE (ECM)).

    NO Go To Next Step
19. **Confirm if vehicle has run out of fuel in past?**

    NO Check for intermittent problems (see PRE-CHECK).

    YES DTC P2A00 is caused by running out of fuel.

ECM POWER SOURCE CIRCUIT

CIRCUIT DESCRIPTION

When the ignition switch is turned ON, battery voltage is applied to terminal IGSW of the ECM. The ECM

cardiagn.com

"MREL" output signal causes current to flow to the coil, closing the contacts of the EFI main relay and supplying power to terminal +B of the ECM.

If the ignition switch is turned OFF, the ECM holds the EFI main relay ON for a maximum of 2 seconds to allow for the initial setting of the throttle valve.

WIRING DIAGRAM

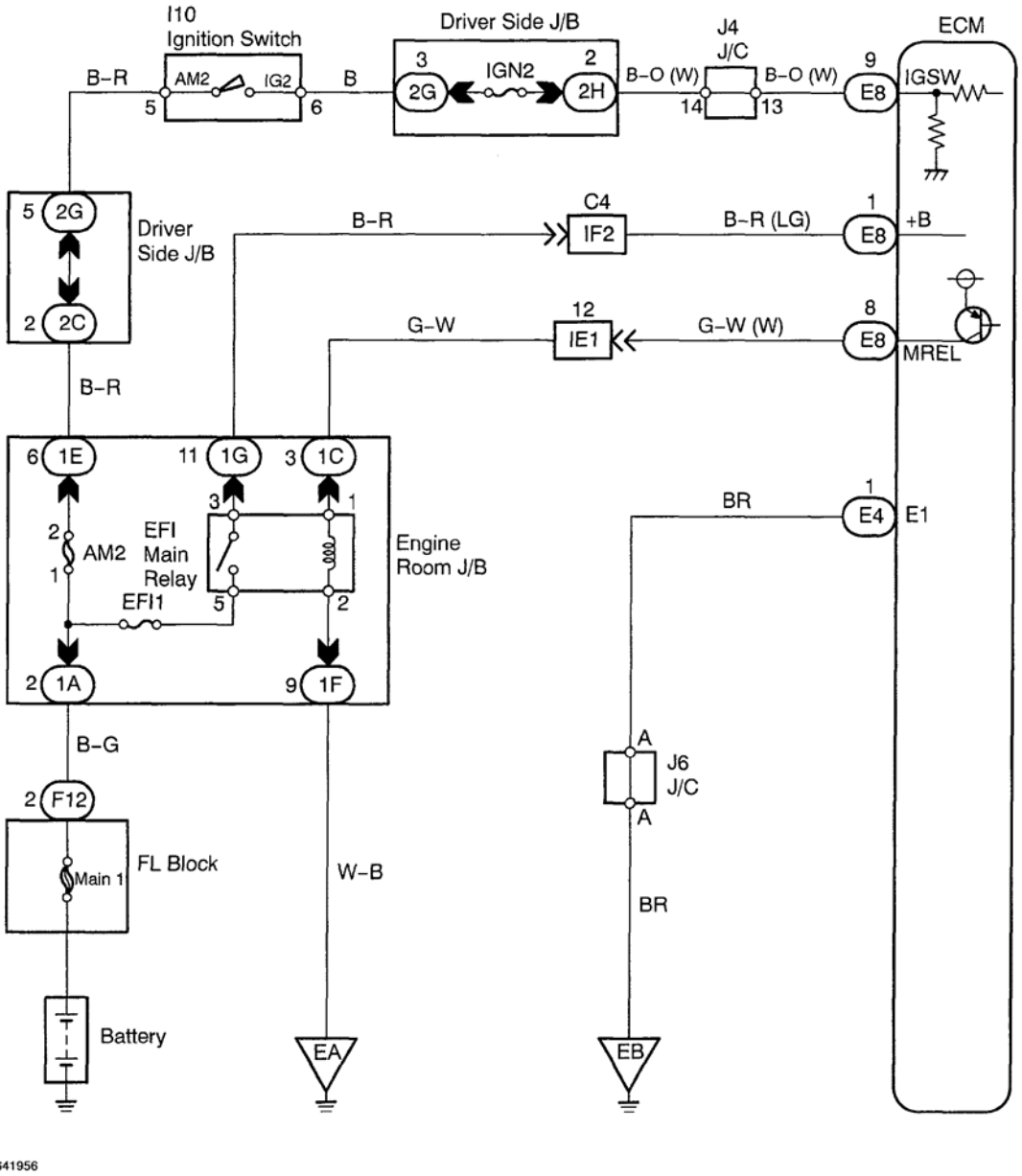

Fig. 258: Wiring Diagram - ECM Power Source
Courtesy of TOYOTA MOTOR SALES, U.S.A., INC.

cardiagn.com

INSPECTION PROCEDURE

1. **Check voltage between terminals +B and E1 or ECM connectors.**

   PREPARATION:

   a. Remove the glove compartment (see **ENGINE CONTROL MODULE (ECM)**).
   b. Turn the ignition switch ON.

   CHECK:

   Measure the voltage between terminals +B and E1 of the ECM connectors.

   OK:

   Voltage: 9 to 14 V

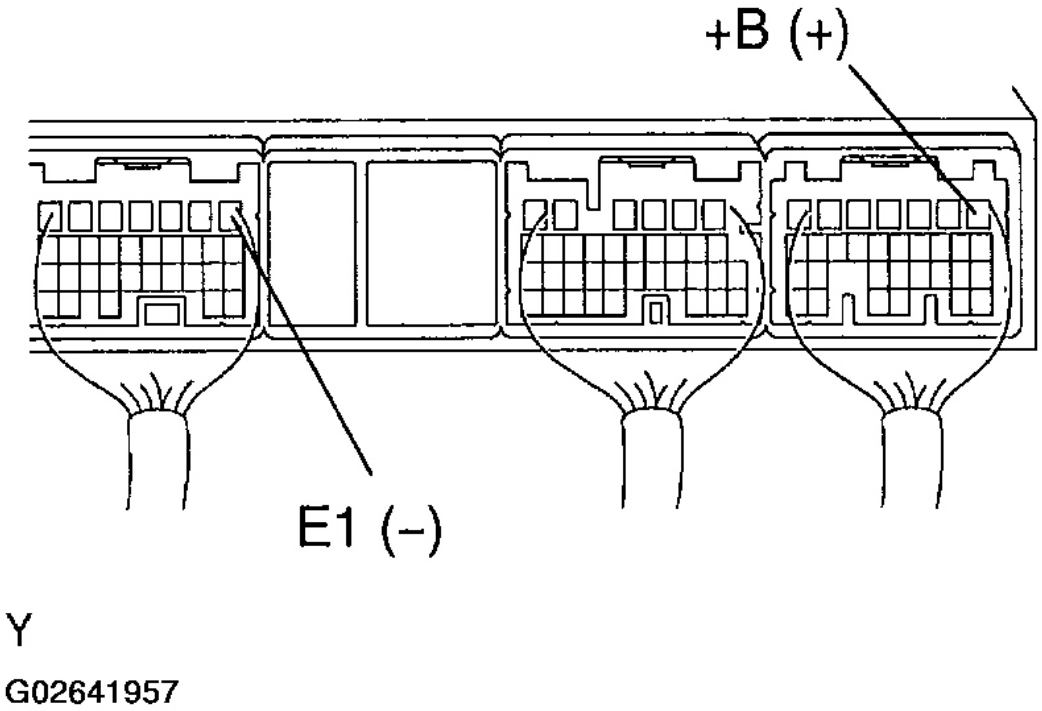

Fig. 259: Identifying Terminals +B & E1 Of ECM Connectors
Courtesy of TOYOTA MOTOR SALES, U.S.A., INC.

OK: Proceed to next circuit inspection shown on problem symptoms table (see PROBLEM SYMPTOMS TABLE).

cardiagn.com

NG: Go To Next Step

2. **Check for open in wire harness between terminal E1 of ECM connector and body ground (see HOW TO USE THE DIAGNOSTIC CHART AND INSPECTION PROCEDURE).**

   NG: Repair or replace harness and connector.

   OK: Go To Next Step

3. **Check voltage between terminal IGSW of ECM connector and body ground.**

PREPARATION:

a. Remove the glove compartment (see **ENGINE CONTROL MODULE (ECM)**).
b. Turn the ignition switch ON.

CHECK:

Measure the voltage between terminal IGSW of the ECM connector and the body ground.

OK:

Voltage: 9 to 14 V

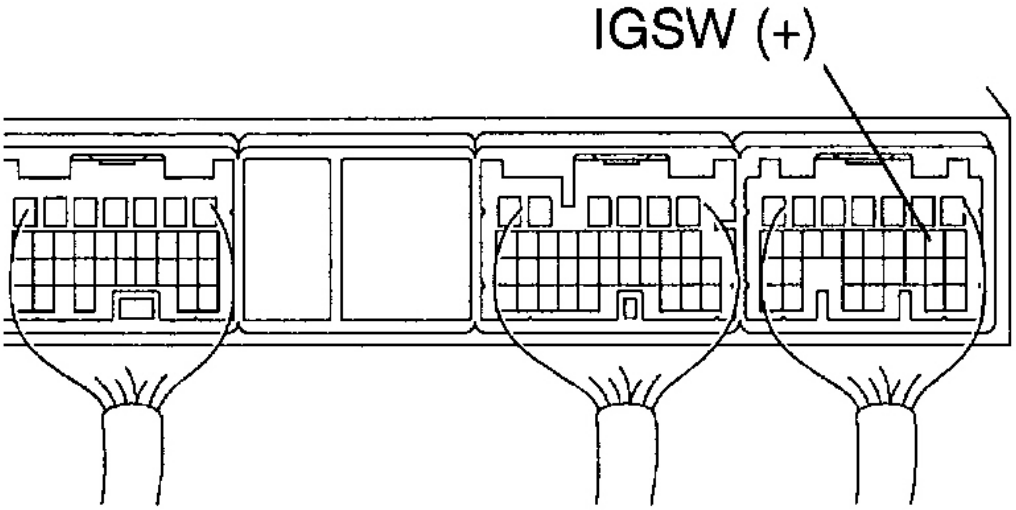

Y

G02641958

cardiagn.com

Fig. 260: Identifying Terminal IGSW Of ECM Connector
Courtesy of TOYOTA MOTOR SALES, U.S.A., INC.

OK: Go to step 6.

NG: Go To Next Step

4. **Check IGN fuse.**

PREPARATION:

Remove the IGN fuse from the engine room J/B.

CHECK:

Check the resistance of the IGN fuse.

OK:

Resistance: Below 1 ohm

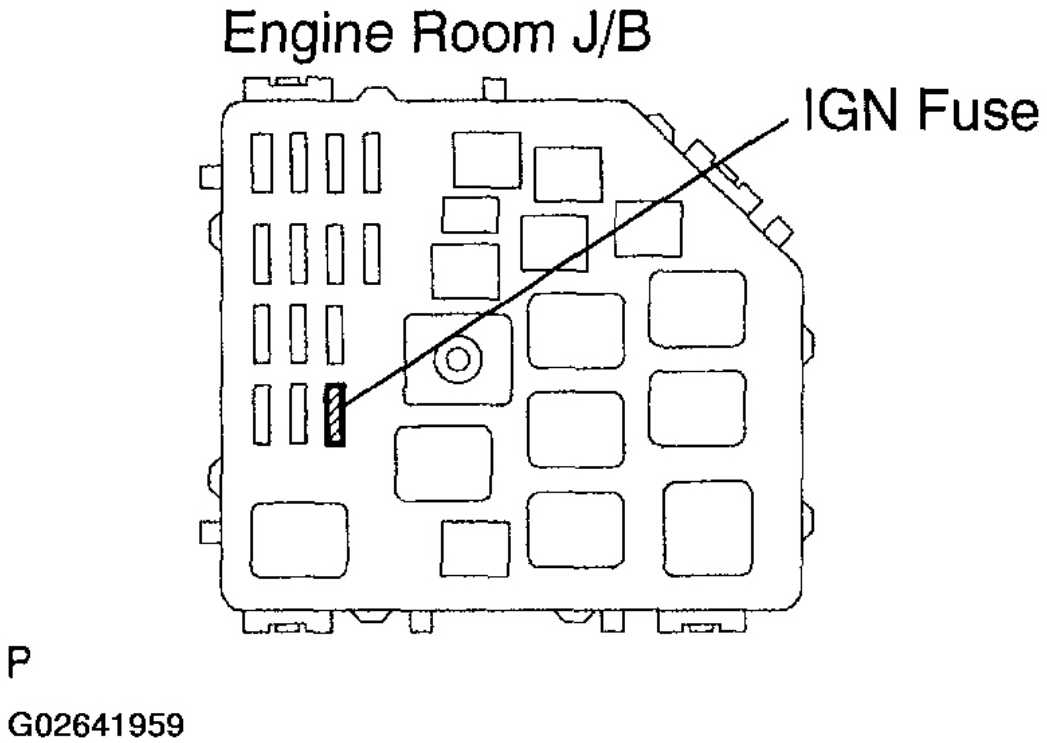

Fig. 261: Identifying IGN Fuse

cardiagn.com

Courtesy of TOYOTA MOTOR SALES, U.S.A., INC.

NG: Replace IGN fuse.

OK: Go To Next Step

5. **Check ignition switch (see INSPECTION).**

   NG: Replace ignition switch.

   OK: Check and repair harness and connector between battery and ignition switch, and ignition switch and ECM.

6. **Check voltage between terminal MREL of ECM connector and body ground.**

PREPARATION:

a. Remove the glove compartment (see **ENGINE CONTROL MODULE (ECM)**).
b. Turn the ignition switch ON.

CHECK:

Measure the voltage between terminal MREL of the ECM connector and body ground.

OK:

Voltage: 9 to 14 V

cardiagn.com

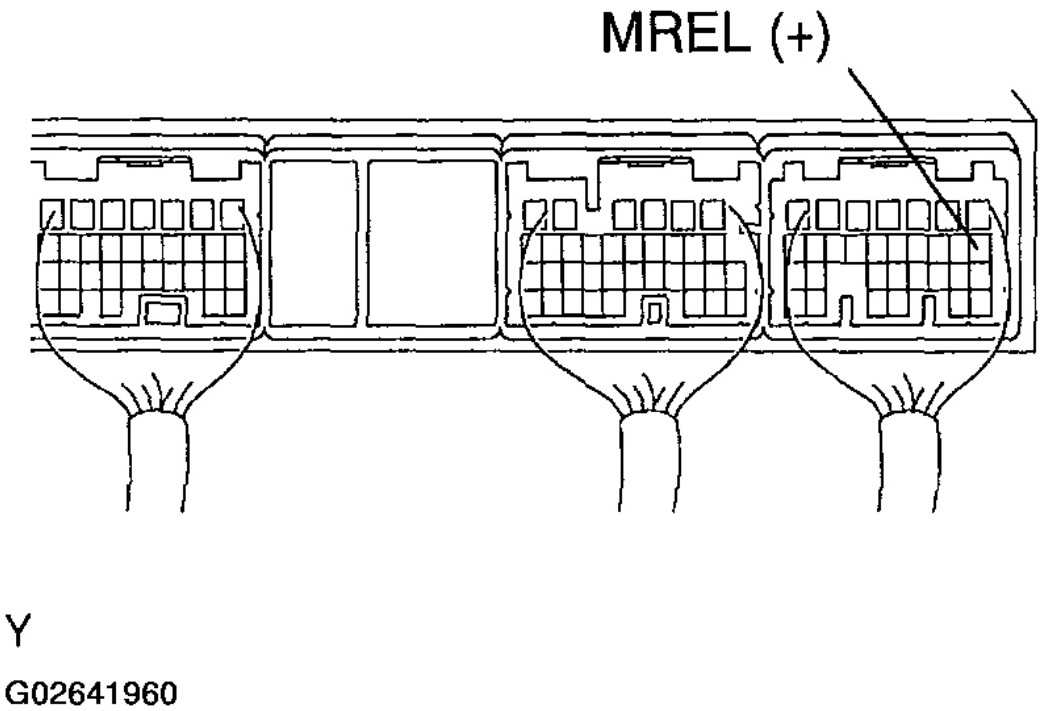

Fig. 262: Identifying Terminal MREL Of ECM Connector
Courtesy of TOYOTA MOTOR SALES, U.S.A., INC.

NG: Replace ECM (see ENGINE CONTROL MODULE (ECM)).

OK: Go To Next Step

7. **Check EFI1 fuse.**

PREPARATION:

Remove the EFI1 fuse from the engine room J/B.

CHECK:

Check the resistance of the EFI1 fuse.

OK:

Resistance: Below 1 ohm

cardiagn.com

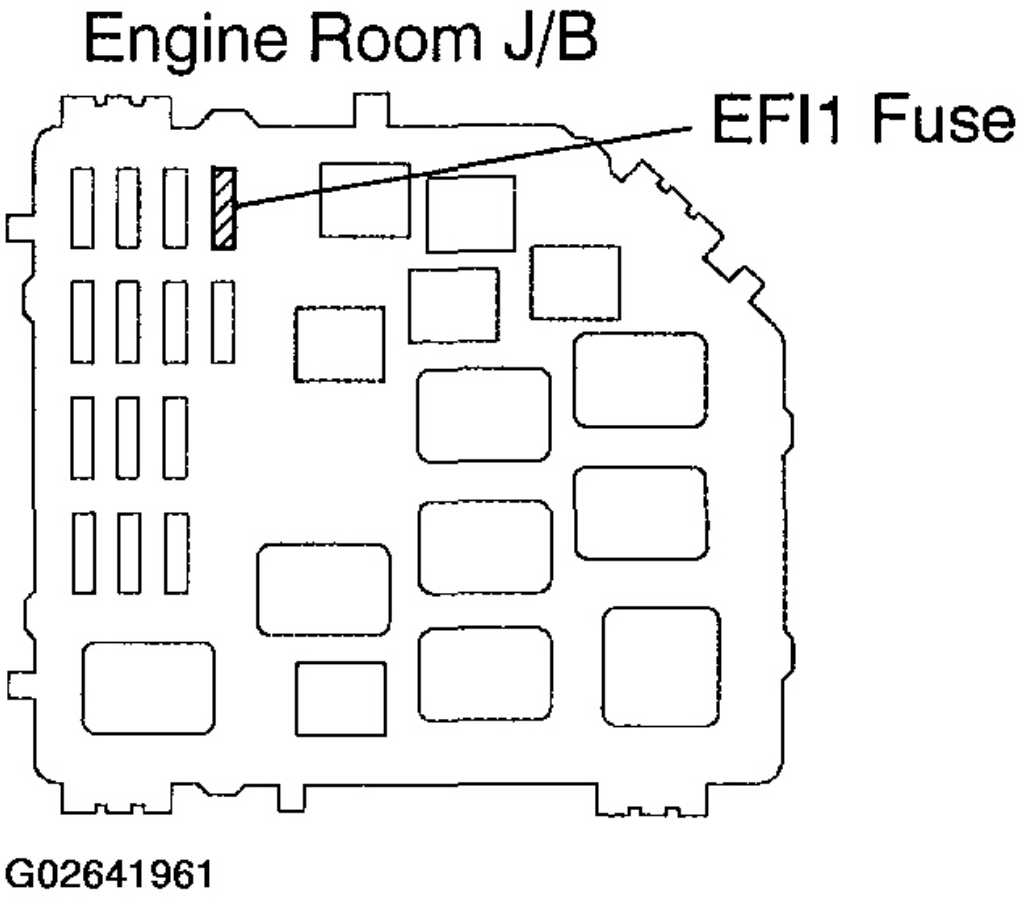

Fig. 263: Identifying EFI1 Fuse
Courtesy of TOYOTA MOTOR SALES, U.S.A., INC.

NG: Replace EFI1 fuse.
OK: Go To Next Step

8. **Check EFI main relay.**

PREPARATION:

Remove the EFI main relay from the engine room J/B.

CHECK:

Inspect the EFI main relay.

cardiagn.com

OK:

EFI MAIN RELAY TERMINALS RESISTANCE

Tester Connection	Specified Condition
3-5	10 kohm or higher
3-5	Below 1 ohm (when battery voltage is applied to terminals 1 and 2)

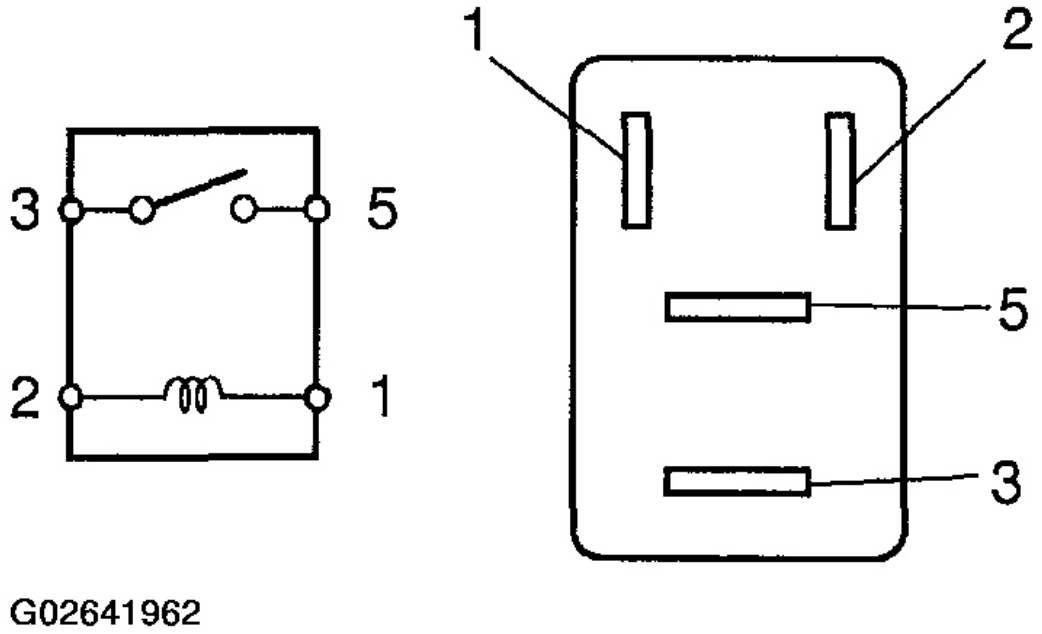

Fig. 264: Identifying EFI Main Relay Terminals
Courtesy of TOYOTA MOTOR SALES, U.S.A., INC.

NG: Replace EFI main relay.

OK: Go To Next Step

9. **Check for open and short in wire harness between terminal MREL of ECM and body ground (see HOW TO USE THE DIAGNOSTIC CHART AND INSPECTION PROCEDURE).**

NG: Repair or replace harness and connector.

OK: Check and repair harness and connector between EFI1 fuse and battery.

FUEL PUMP CONTROL CIRCUIT

CIRCUIT DESCRIPTION

When the engine is cranked, current flows from the ignition switch terminal ST1 to the starter relay coil

cardiagn.com

(Marking: ST), and current flows to terminal STA of the ECM (STA signal).

When the STA signal and NE signal are input to the ECM, Tr is turned ON, current flows to coil of the circuit opening relay (Marking: C/OPN), the relay switches ON, power is supplied to the fuel pump and the fuel pump operates.

While the NE signal is generated and the engine is running, the ECM keeps Tr ON (C/OPN relay ON) and the fuel pump also keeps operating.

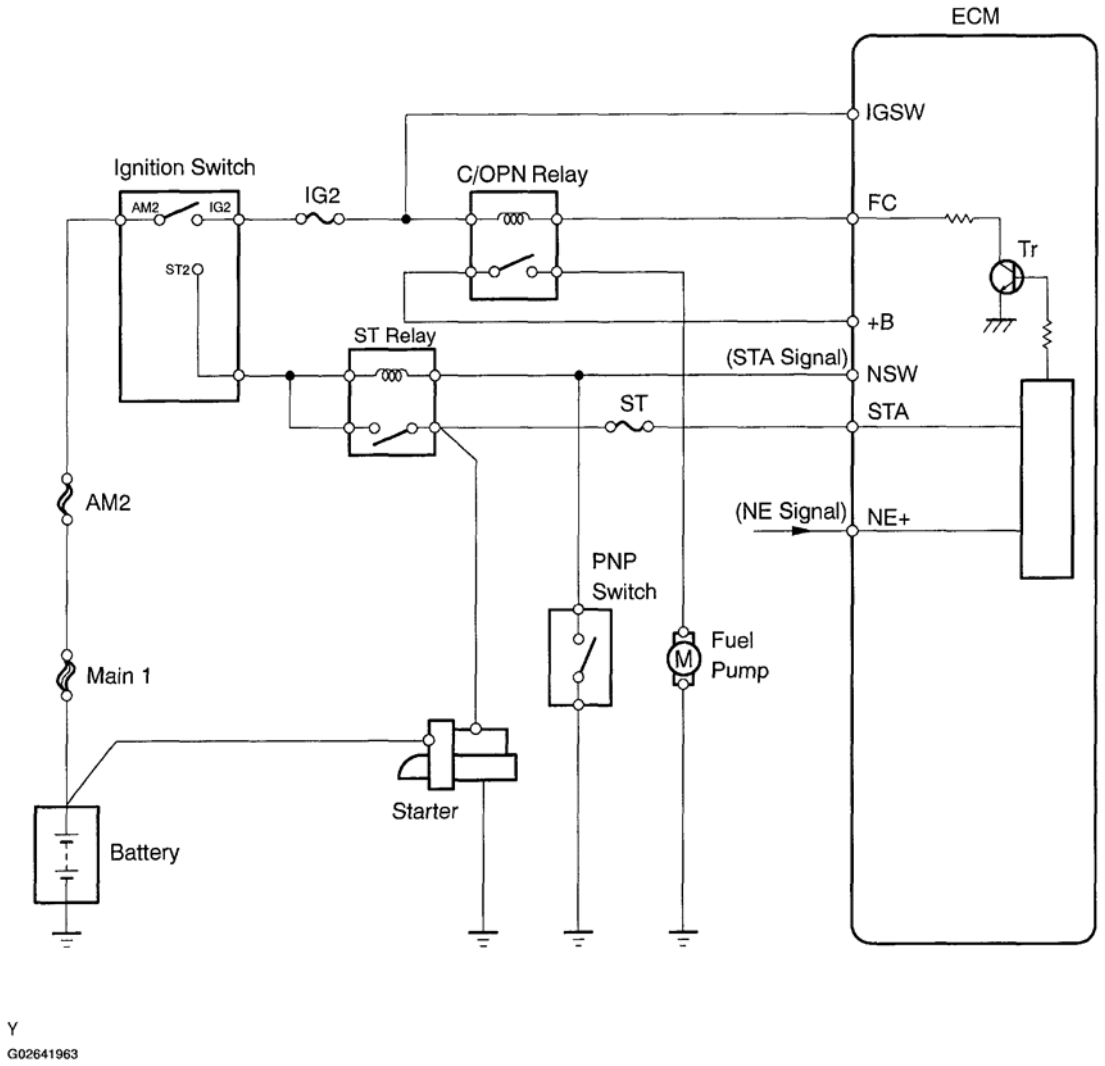

Fig. 265: Circuit Description - Fuel Pump Control
Courtesy of TOYOTA MOTOR SALES, U.S.A., INC.

WIRING DIAGRAM

cardiagn.com

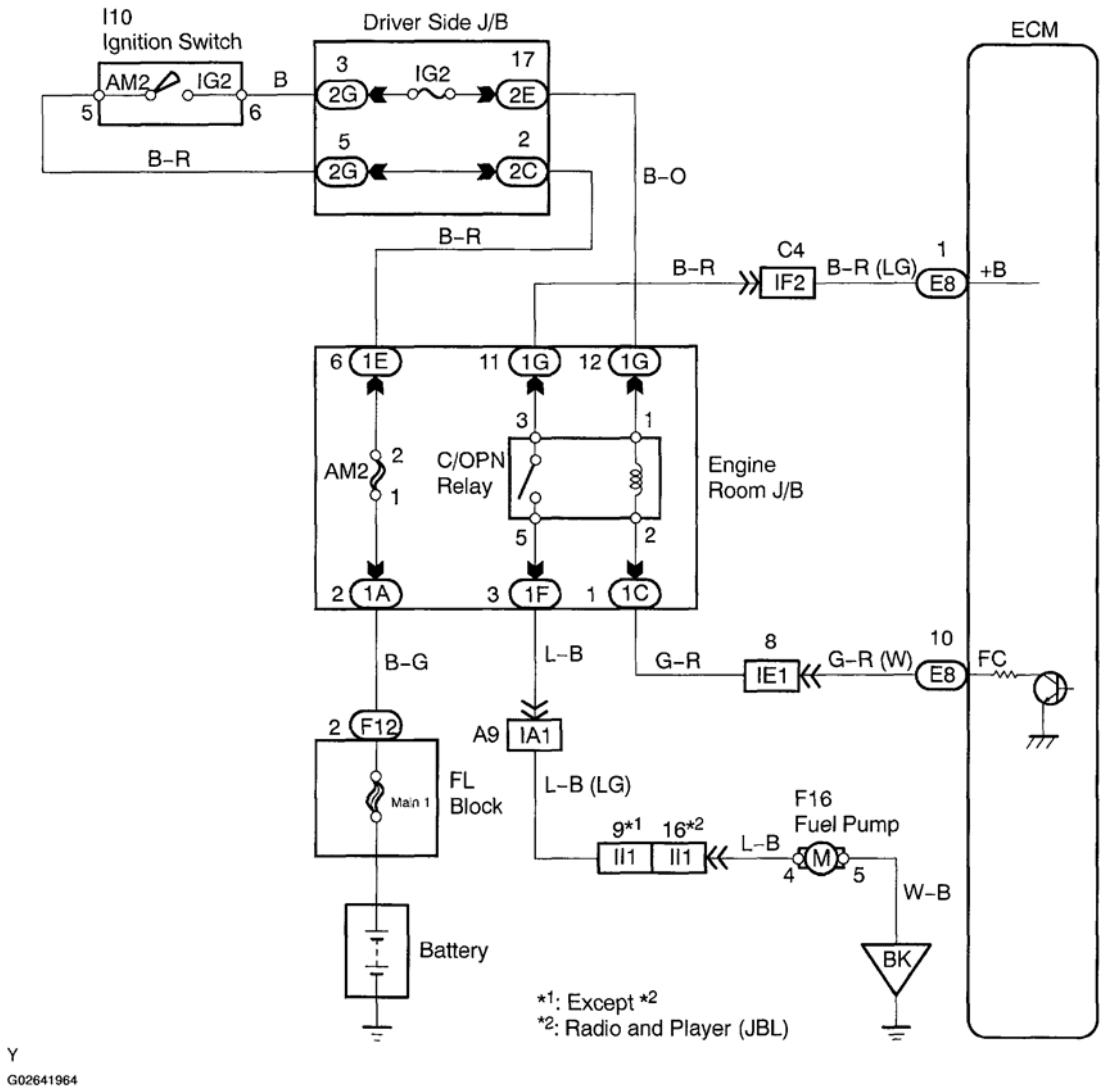

Fig. 266: Wiring Diagram - Fuel Pump Control
Courtesy of TOYOTA MOTOR SALES, U.S.A., INC.

INSPECTION PROCEDURE

Hand-held tester:

1. **Connect hand-held tester and check operation of fuel pump.**

   PREPARATION:

   a. Connect the hand-held tester to the DLC3.
   b. Turn ON the ignition switch. Push the hand-held tester main switch.
   c. Enter the following menus: DIAGNOSIS / ENHANCED OBD II / ACTIVE TEST / FUEL PUMP /

cardiagn.com

SPD.

CHECK:

Check that operating noise is heard from the relay while operating it using the hand-held tester.

OK:

Operating noise can be heard from the relay.

OK: Go to step 5.
NG: Go To Next Step

2. **Check circuit opening relay (Marking: C/OPN).**

PREPARATION:

Remove the circuit opening relay from the engine room J/B.

CHECK:

Measure the circuit opening relay.

OK:

CIRCUIT OPENING RELAY TERMINALS RESISTANCE

Tester Connection	Specified Condition
3-5	10 kohm or higher
3-5	Below 1 ohm (when battery voltage is applied to terminals 1 and 2)

cardiagn.com

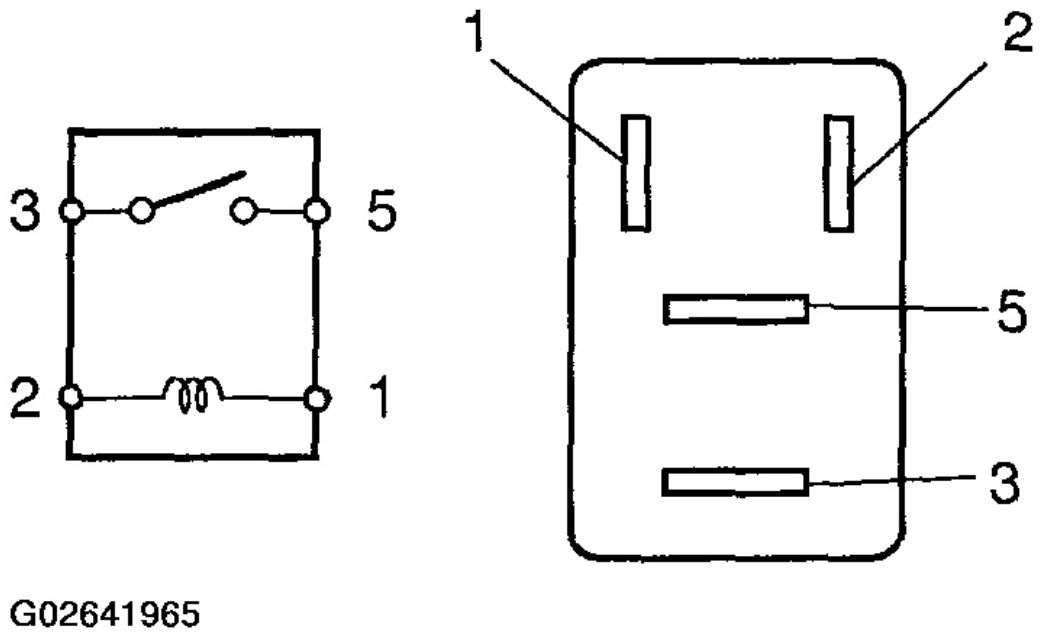

Fig. 267: Identifying Relay Terminals (Marking: C/OPN)
Courtesy of TOYOTA MOTOR SALES, U.S.A., INC.

NG: Replace circuit opening relay.

OK: Go To Next Step

3. **Check voltage between terminal FC of ECM connector and body ground.**

PREPARATION:

a. Remove the glove compartment (see **ENGINE CONTROL MODULE (ECM)**).
b. Turn the ignition switch ON.

CHECK:

Measure the voltage between terminal FC of the ECM connector and body ground.

OK:

Voltage: 9 to 14 V

cardiagn.com

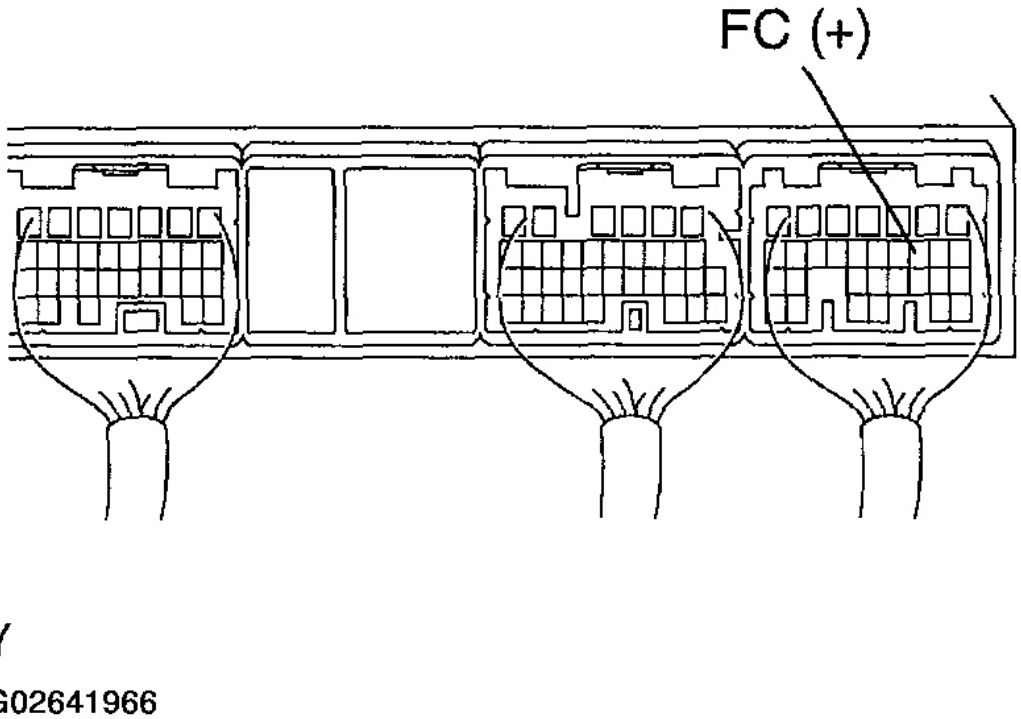

Fig. 268: Identifying Terminal FC Of ECM Connector
Courtesy of TOYOTA MOTOR SALES, U.S.A., INC.

OK: Go to step 5.

NG: Go To Next Step

4. **Check for open in wire harness between EFI main relay and circuit opening relay (Marking: C/OPN), and circuit opening relay and ECM (see HOW TO USE THE DIAGNOSTIC CHART AND INSPECTION PROCEDURE).**

   NG: Repair or replace harness and connector.

   OK: Replace ECM (see ENGINE CONTROL MODULE (ECM)).

5. **Check fuel pump (see FUEL PUMP).**

   NG: Repair or replace fuel pump.

   OK: Go To Next Step

6. **Check for open in wire harness between circuit opening relay (Marking: C/OPN) and fuel pump, and fuel pump and body ground (see HOW TO USE THE DIAGNOSTIC CHART AND INSPECTION PROCEDURE).**

   NG: Repair or replace harness and connector.

   OK: Replace ECM (see ENGINE CONTROL MODULE (ECM)).

cardiagn.com

OBD II scan tool (excluding hand-held tester):

1. **Check fuel pump operation (see FUEL PUMP).**

   CHECK:

   Check if there is pressure in the fuel inlet hose.

   HINT:

   The pipe has fuel pressure if the sound of flowing fuel can be heard.

   NG: Proceed to next circuit inspection shown on problem symptoms table (see PROBLEM SYMPTOMS TABLE).

   OK: Go To Next Step

2. **Check operation circuit opening relay (Marking: C/OPN).**

   PREPARATION:

   Connect between terminal FC of the ECM connector and the body ground.

   CHECK:

   Check the relay operation.

   OK:

   Noise can be heard from the circuit opening relay.

cardiagn.com

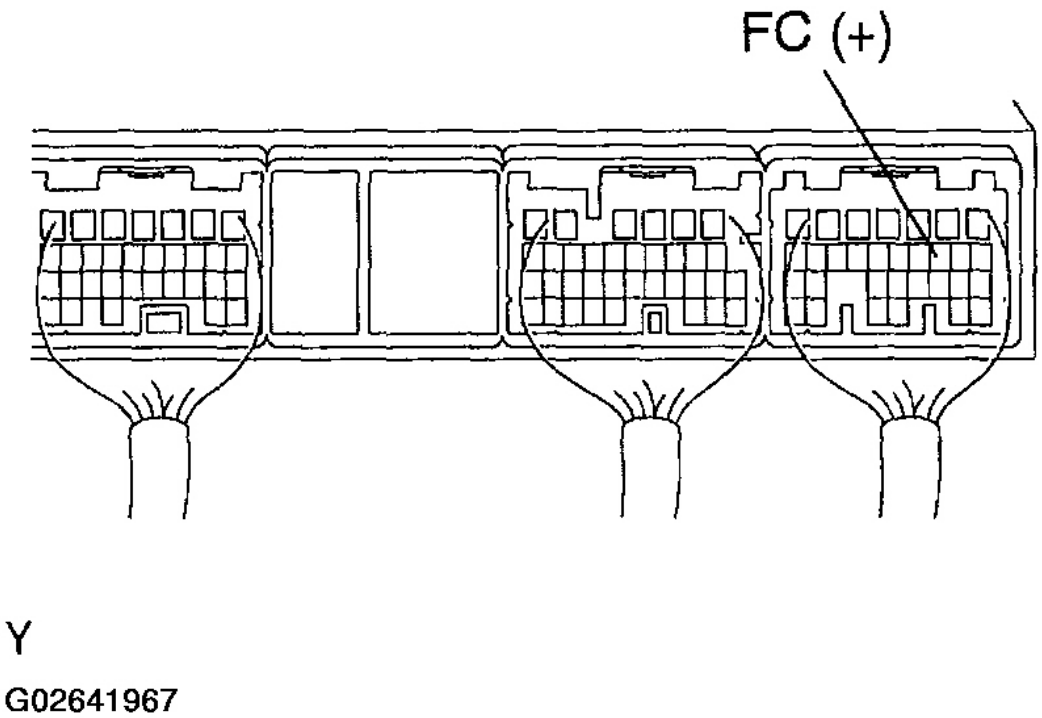

Fig. 269: Identifying Terminal FC Of ECM Connector
Courtesy of TOYOTA MOTOR SALES, U.S.A., INC.

NG: Go to step 6.
OK: Go To Next Step

3. **Check circuit opening relay (Marking: C/OPN).**

PREPARATION:

Remove the circuit opening relay from the engine room J/B.

CHECK:

Measure the circuit opening relay.

OK:

CIRCUIT OPENING RELAY TERMINALS RESISTANCE

Tester Connection	Specified Condition
3-5	10 kohm or higher
3-5	Below 1 ohm (when battery voltage is applied to terminals 1 and 2)

cardiagn.com

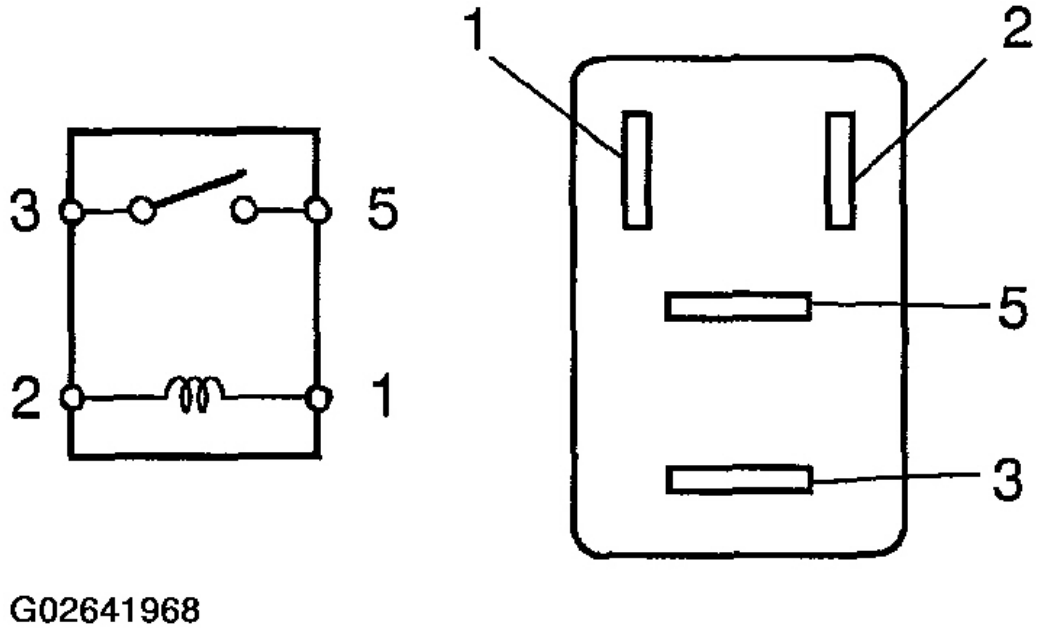

Fig. 270: Identifying Relay Terminals (Marking: C/OPN)
Courtesy of TOYOTA MOTOR SALES, U.S.A., INC.

NG: Replace circuit opening relay.

OK: Go To Next Step

4. **Check voltage between terminal FC of ECM connector and body ground.**

PREPARATION:

a. Remove the glove compartment (see **ENGINE CONTROL MODULE (ECM)**).
b. Turn the ignition switch ON.

CHECK:

Measure the voltage between terminal FC of the ECM connector and body ground.

OK:

Voltage: 9 to 14 V

cardiagn.com

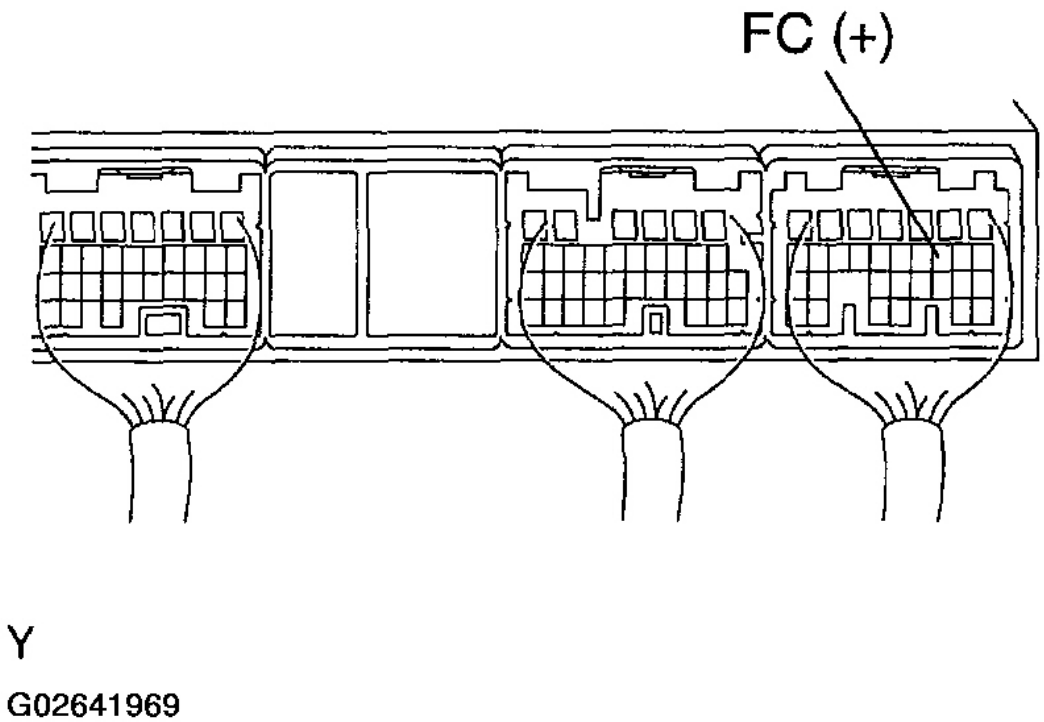

Fig. 271: Identifying Terminal FC Of ECM Connector
Courtesy of TOYOTA MOTOR SALES, U.S.A., INC.

OK: Replace ECM (see ENGINE CONTROL MODULE (ECM)).

NG: Go To Next Step

5. **Check for open in wire harness between circuit opening relay (Marking: C/OPN) and fuel pump, and fuel pump and body ground (see HOW TO USE THE DIAGNOSTIC CHART AND INSPECTION PROCEDURE).**

   NG: Repair or replace harness and connector.

   OK: Go To Next Step

6. **Check fuel pump (see FUEL PUMP).**

   NG: Repair or replace fuel pump.

   OK: Go To Next Step

7. **Check for open in wire harness between circuit opening relay (Marking: C/OPN) and fuel pump, and fuel pump and body ground (see HOW TO USE THE DIAGNOSTIC CHART AND INSPECTION PROCEDURE).**

   NG: Repair or replace harness and connector.

   OK: Replace ECM (see ENGINE CONTROL MODULE (ECM)).

cardiagn.com

MIL CIRCUIT MALFUNCTION

CIRCUIT DESCRIPTION

The MIL is used to indicate the ECM's detection of a vehicle malfunction.

The instrument panel IG2 fuse provides circuit power and the ECM provides the circuit ground that illuminates the MIL.

MIL operations should be checked visually:

The MIL should be illuminated when the ignition is first turned ON. If the MIL is always ON or OFF, use the hand-held tester or OBD II scan tool and follow the procedures to determine the cause of problem.

WIRING DIAGRAM

cardiagn.com

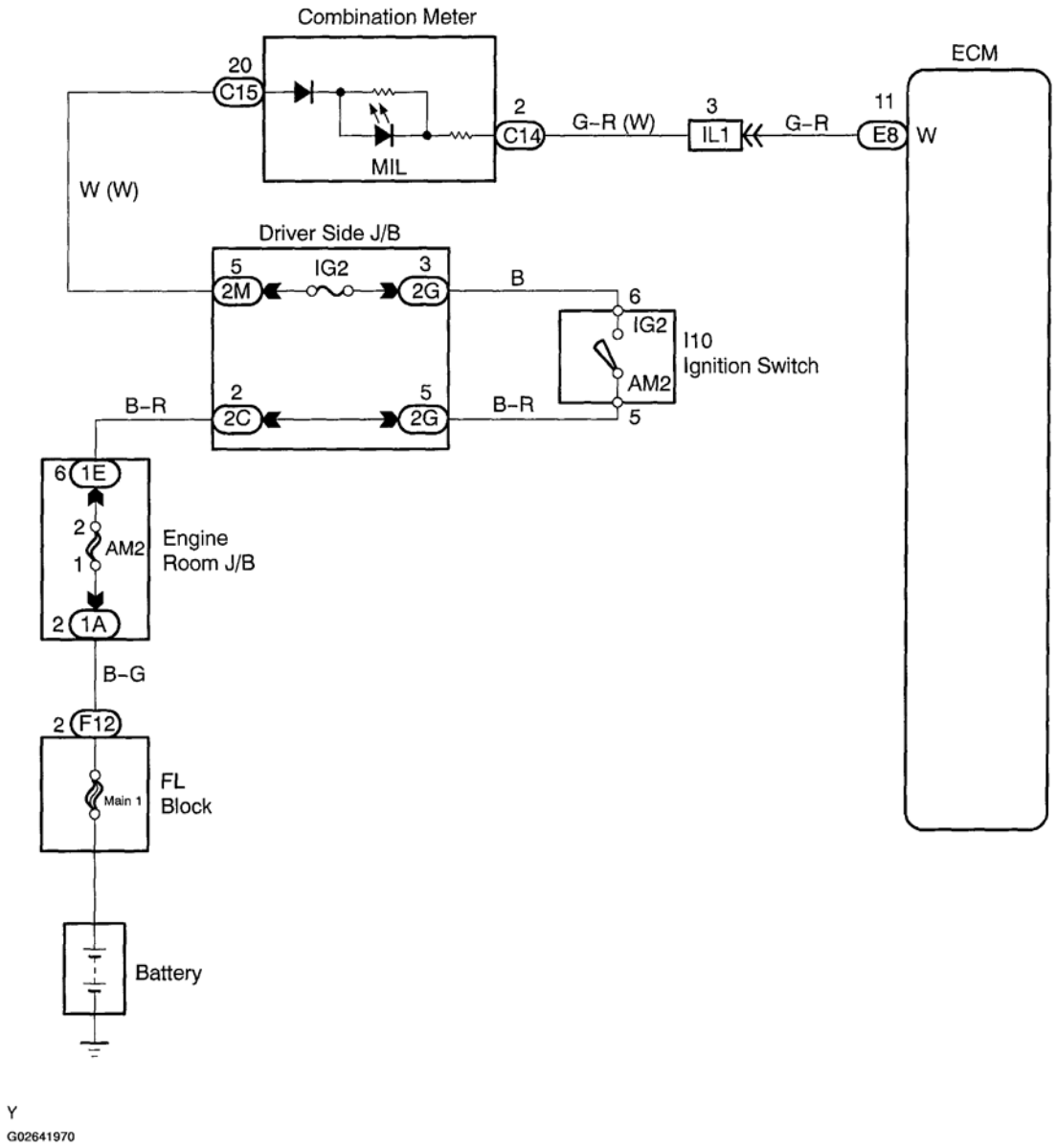

Fig. 272: Wiring Diagram - Malfunction Indicator Light (MIL)
Courtesy of TOYOTA MOTOR SALES, U.S.A., INC.

INSPECTION PROCEDURE

HINT:

Troubleshoot in accordance with the chart below for each trouble symptom.

INSPECTION PROCEDURE

	Start inspection from step 1 in case of using hand-

cardiagn.com

MIL is not illuminated	held tester and start from 2 in case of not using hand-held tester
MIL remains on	After inspection of step 3, start inspection from 4 in case of using hand-held tester and start from 5 in case of not using hand-held tester

1. **Check operation of MIL.**

   PREPARATION:

   a. Connect the hand-held tester or OBD II scan tool to the DLC3.
   b. Turn ON the ignition switch and push the hand-held tester or the OBD II scan tool main switch ON.
   c. Switch the hand-held tester or the OBD II scan tool from the normal mode to the check mode.

   CHECK:

   Check if the MIL blinks.

   OK:

   The MIL blinks.

   OK: Replace ECM (see ENGINE CONTROL MODULE (ECM)).
   NG: Go To Next Step

2. **Check bulb of MIL.**

   See combination meter troubleshooting.

   NG: Repair or replace bulb or combination meter assembly.
   OK: Go To Next Step

3. **Check that ECM connectors are securely connected to ECM.**
   NG: Connect connector to ECM.
   OK: Check for open circuit in wire harness between combination meter and ECM (see HOW TO USE THE DIAGNOSTIC CHART AND INSPECTION PROCEDURE).

4. **Check operation of MIL (see step 1).**
   OK: Replace ECM (see ENGINE CONTROL MODULE (ECM)).
   NG: Go To Next Step

5. **Is DTC output?**

   CHECK:

   Check DTC, refer to **DIAGNOSTIC TROUBLE CODE CHART**.

cardiagn.com

OK: Repair circuit indicated by output code.

NG: Check for short circuit in wire harness between DLC3 and ECM (see HOW TO USE THE DIAGNOSTIC CHART AND INSPECTION PROCEDURE) in INTRODUCTION article.

cardiagn.com